DOE/ID-10772
Revision 0
September 2000

U.S. Department of Energy
Idaho Operations Office

Remedial Design/Remedial Action Work Plan for Group 1 Tank Farm Interim Action

IDAHO NATIONAL ENGINEERING & ENVIRONMENTAL LABORATORY

DOE/ID-10772
Revision 0

Remedial Design/Remedial Action Work Plan for Group 1 Tank Farm Interim Action

Published September 2000

Idaho National Engineering and Environmental Laboratory
Environmental Restoration Directorate
Idaho Falls, Idaho 83415

Prepared for the
U.S. Department of Energy
Assistant Secretary for Environmental Restoration
Under DOE Idaho Operations Office
Contract DE-AC07-99ID13727

ABSTRACT

The Remedial Design/Remedial Action Work Plan provides the framework for defining the remedial design requirements, preparing the design documentation, and defining and implementing the construction and operations phases of Operable Unit 3-13 Tank Farm Interim Action to be performed at the Idaho Nuclear Technology and Engineering Center at the Idaho National Engineering and Environmental Laboratory. This plan details the design developed to support the interim action activities, selected in the final Record of Decision for Operable Unit 3-13, as well as the management approach to conducting the interim action, the work elements for the interim action, and the associated schedule and documentation.

CONTENTS

ABSTRACT iii

ACRONYMS ix

1. INTRODUCTION 1-1

1.1 Background 1-1

1.2 Selected Remedy 1-4

1.3 RD/RA Work Plan Organization 1-4

2. DESIGN BASIS 2-1

2.1 Design Criteria 2-1

2.1.1 Stormwater Drainage System 2-1
2.1.2 Stormwater Evaporation Pond 2-2
2.1.3 Surface Sealing 2-3

2.2 DOE Related Codes, Standards, and Documents 2-4

2.3 Engineering Standards 2-4

2.4 Environmental and Safety Requirements 2-4

2.5 Management Control Procedures 2-8

2.6 Status of Record of Decision Assumptions 2-9

2.7 Design Assumptions 2-9

2.7.1 Stormwater Drainage System 2-9
2.7.2 Stormwater Evaporation Pond 2-10
2.7.3 Surface Sealing 2-10

2.8 Plans for Minimizing Environmental and Public Impacts 2-11

2.9 Quality Assurance 2-11

2.10 Identification of Unresolved Data Needs 2-11

3. REMEDIAL DESIGN 3-1

3.1 Physical Site Description 3-1

3.2 Stormwater Collection System 3-3

3.2.1 Lift Station 3-3

3.3 Evaporation Pond 3-4

3.4 Surface Sealing 3-5

3.5 Subcontractor Staging 3-5

4. REMEDIAL ACTION WORK PLAN 4-1

4.1 Relevant Changes to the RD/RA SOW 4-1

4.2 Subcontracting Plan 4-1

4.3 Remedial Action Work Elements 4-1

4.3.1 Pre-mobilization 4-1
4.3.2 Mobilization 4-1
4.3.3 Stormwater Drainage System 4-2
4.3.4 Stormwater Evaporation Pond 4-2
4.3.5 Surface Sealing 4-3
4.3.6 Stormwater Management and Sediment Control 4-3
4.3.7 Clearing and Grubbing the Sites 4-3
4.3.8 Dust Control 4-3
4.3.9 Site Reclamation 4-3
4.3.10 Operations and Maintenance 4-3
4.3.11 Demobilization 4-4

4.4 Evaluating Remedial Action Against Performance Measurement Points 4-4

4.4.1 Evaluating Infiltration Reduction in the Tank Farm 4-4
4.4.2 Monitoring Evaporation Pond Performance 4-4

4.5 Field Oversight/Construction Management 4-4

4.6 Project Cost Estimate 4-5

4.7 Project Schedule 4-5

4.8 Inspections 4-5

4.8.1 Prefinal Inspection 4-5
4.8.2 Prefinal Inspection Report 4-6
4.8.3 Final Inspection 4-6

4.9 Remedial Action Report 4-6

4.10 Decontamination 4-7

4.11 Operation and Maintenance 4-7

4.12 Waste Management 4-7

4.13 Health and Safety 4-8

4.14 Spill Prevention/Response Program 4-8

4.15 Other Procedures Relevant to RA Activities 4-8

5. REFERENCES 5-1

Appendix A—Engineering Design File - Drainage Ditch Capacity Verification at INTEC

Appendix B—Engineering Design File - Olive Avenue Stormwater Lift Station at INTEC

Appendix C—Engineering Design File - Evaporation Pond Sizing Design

Appendix D—Engineering Design File - OU 3-13 Tank Farm Interim Action Group 1 Soils Decision Analysis Study

Appendix E—Construction Specifications

Appendix F—Design Drawings

Appendix G—Quality Level Designation

Appendix H—Construction Schedule

Appendix I—Stormwater Pollution Prevention Plan

Appendix J—Detailed Cost Estimate

Appendix K—Other Procedures Relevant to the RA

Appendix L—Operation and Maintenance Plan for the INTEC Operable Unit 3-13 Tank Farm Soils Interim Action

Appendix M—Waste Management Plan for the INTEC Operable Unit 3-13 Tank Farm Soils Interim Action

Appendix N—Health and Safety Plan for Waste Area Group 3, Operable Unit 3-13, Group 1 Soils Tank Farm Interim Action

Appendix O—Polyurea Demonstration Report

FIGURES

1-1. Location of INTEC within the INEEL 1-2

1-2. Location of Tank Farm Interim Action activities. 1-3

3-1. Tank Farm area with street names and building numbers. 3-2

TABLES

2-1. Applicable or Relevant and Appropriate Requirements for the Tank Farm Interim Action.... 2-5

4-1. Schedule of primary and secondary document deliverables..... 4-5

ACRONYMS

ARAR	applicable or relevant and appropriate requirement
BBWI	Bechtel BWXT Idaho, LLC
CN	Curve Number
DOE	U.S. Department of Energy
DOE-ID	U.S. Department of Energy Idaho Operations
ECA	environmentally controlled area
EDF	engineering design file
EPA	U.S. Environmental Protection Agency
FFA/CO	Federal Facilities Agreement and Consent Order
HASP	Health and Safety Plan
HDPE	high-density polyethylene
IDEQ	Idaho Department of Environmental Quality
INEEL	Idaho National Engineering and Environmental Laboratory
INTEC	Idaho Nuclear Technology and Engineering Center
IPMP	implementing project management plan
MCP	Management Control Procedure
O&M	Operation and Maintenance
OU	operable unit
QA/QC	quality assurance/quality control
RA	remedial action
RCRA	Resource Conservation and Recovery Act
RD/RA	remedial design/remedial action
RFP	Request for Proposal
RI/FS	remedial investigation/feasibility study
ROD	Record of Decision

SCS	Soil Conservation Service
SOW	Scope of Work
SRPA	Snake River Plain Aquifer
TBC	to be considered
TFIA	Tank Farm Soils Interim Action
WAG	Waste Area Group
WMP	waste management plan
WP	work plan
WTS	waste technical specialist

Remedial Design/Remedial Action Work Plan for Group 1 Tank Farm Interim Action

1. INTRODUCTION

In accordance with the Idaho National Engineering and Environmental Laboratory (INEEL) Federal Facility Agreement and Consent Order (FFA/CO) (U.S. Department of Energy Idaho Operations Office [DOE-ID] 1991), DOE-ID submits the following Remedial Design/Remedial Action (RD/RA) Work Plan (WP) for Group 1, Tank Farm Interim Action (TFIA) within Operable Unit (OU) 3-13 in Waste Area Group (WAG) 3. The RD/RA activities identified in this Work Plan, as part of the Comprehensive Environmental Response, Compensation, and Liability Act process, will proceed in accordance with the signed OU 3-13 Record of Decision (ROD) (DOE-ID 1999) and the RD/RA Scope of Work (SOW) (DOE-ID 2000) for WAG 3, OU 3-13. This RD/RA Work Plan provides the framework for defining the remedial design requirements, preparing the design documentation, and defining and implementing the construction and operations phases of the TFIA.

1.1 Background

The Idaho Nuclear Technology and Engineering Center (INTEC), formerly known as the Idaho Chemical Processing Plant, is located in the south-central area of the INEEL in southeastern Idaho (see Figure 1-1). From 1952 to 1992, operations at INTEC primarily involved reprocessing spent nuclear fuel from defense projects, which entailed extracting reusable uranium from the spent fuels. Liquid waste generated from the reprocessing activities, which ceased in 1992, is stored in an underground Tank Farm at INTEC. Both soil and groundwater contamination have resulted from these previous operations. Under the FFA/CO, the U.S. Environmental Protection Agency (EPA), Idaho Department of Environmental Quality (IDEQ), and U.S. Department of Energy (DOE) (collectively referred to as the Agencies) are directing cleanup activities to reduce human health and environmental risks to acceptable levels. Per the FFA/CO, INTEC is designated as WAG 3. In order to facilitate remediation of the INTEC, WAG 3 was further divided into OUs comprised of individual contaminant release sites.

Several phases of investigation have been performed at the OUs within WAG 3. A comprehensive remedial investigation/feasibility study (RI/FS) was conducted for OU 3-13 to determine the nature and extent of contamination and corresponding potential risks to human health and the environment under various exposure pathways and scenarios. Based on the RI/FS results, INTEC release sites were further segregated into seven groups based on contaminants of concern, accessibility, or geographic proximity to allow development and analysis of remedial action alternatives. The TFIA was designated as Group 1 within OU 3-13. The Group 1 soils are within the Tank Farm fence. The TFIA includes minimizing precipitation infiltration in the Tank Farm and within a 150-ft zone surrounding the Tank Farm (Figure 1-2). There are several buildings surrounding the Tank Farm, therefore the perimeter boundary line is not drawn uniformly at the 150-ft mark. The area within the fence is approximately 200,000 ft^2 (4.6 acres) and the unpaved area within the 150-ft zone is approximately 160,000 ft^2 (3.7 acres). The principal threats posed by the Group 1 soils are from direct radiation exposure to workers or the public and from the potential leaching and transport of soil contaminants to the perched water or the Snake River Plain Aquifer (SRPA).

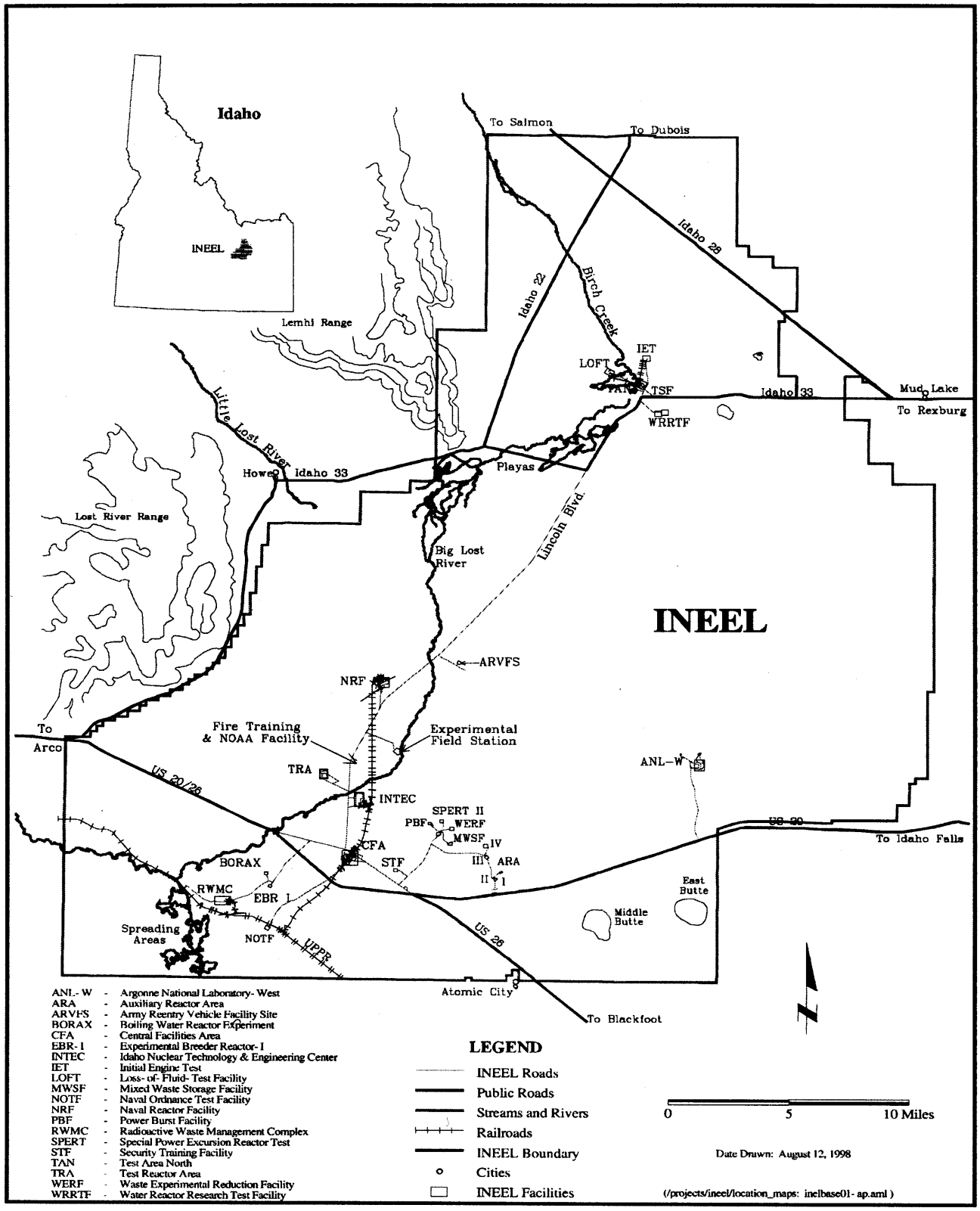

Figure 1-1. Location of INTEC within the INEEL.

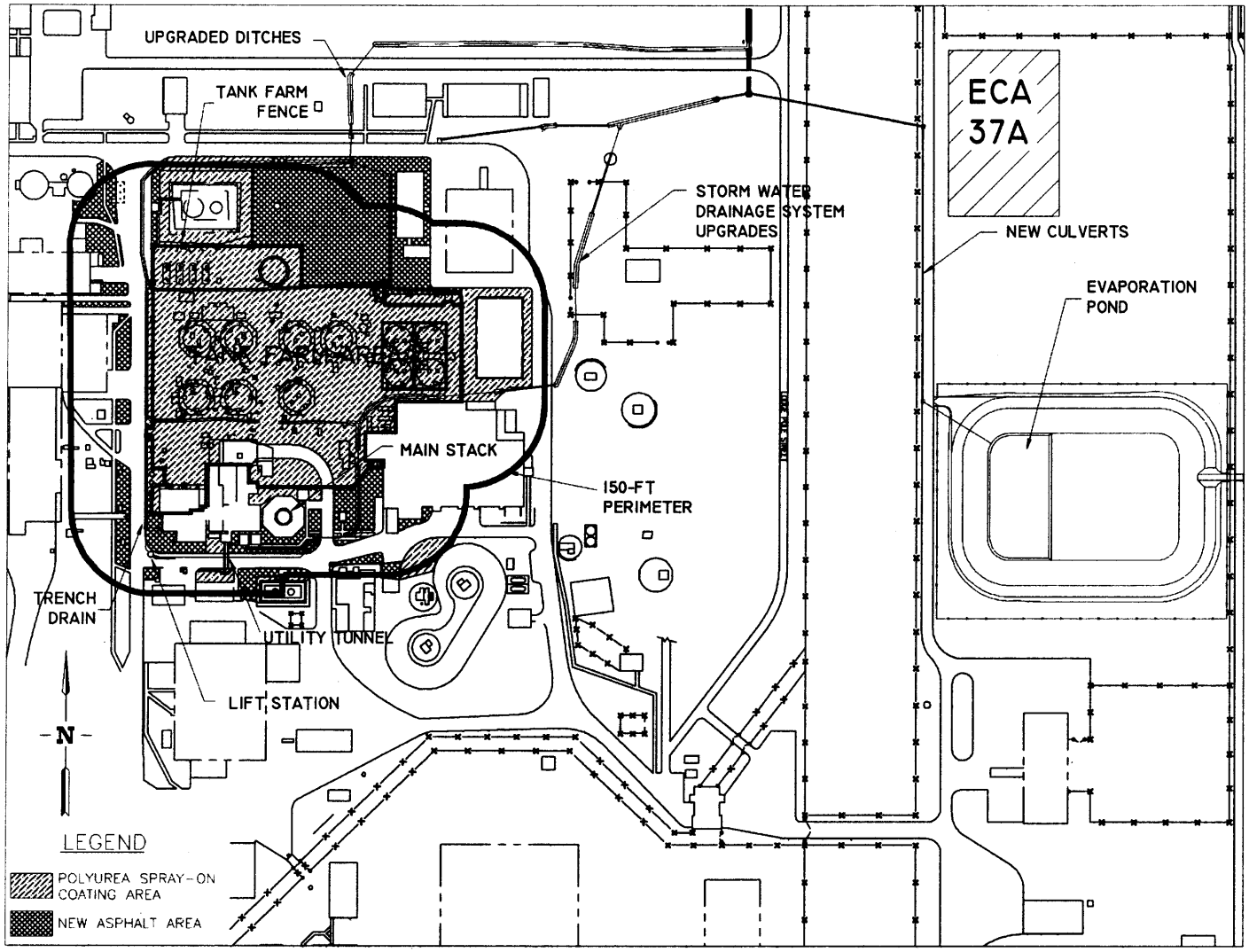

Figure 1-2. Location of Tank Farm Interim Action activities.

1.2 Selected Remedy

A final remedy for the TFIA release sites has been deferred pending further characterization and coordination of any proposed remedial actions with the Idaho High Level Waste and Facilities Disposition Environmental Impact Statement, currently in preparation. The final remedy will be conducted under OU 3-14. The selected interim action is Institutional Controls with Surface Water Control. This interim action will provide protection until a final remedy is developed and implemented. The major elements of this action include: 1) restricting access to control exposure to workers and prevent exposure to the public from soils at the Tank Farm until implementation of the final remedy under OU 3-14; 2) accommodating a 1 in 25-year, 24-hour storm event, with surface water run-on diversion channels; 3) minimizing precipitation infiltration by grading and surface-sealing the Tank Farm soils sufficient to divert 80% of the average annual precipitation falling on the Tank Farm soils area; and 4) improving drainage systems surrounding the Tank Farm to direct water away from the contaminated areas.

1.3 RD/RA Work Plan Organization

The RD/RA Work Plan is a comprehensive document containing all design information with supporting documentation as well as the plan and supporting documentation for implementing the remedy in the field. Section 1 introduces the project and summarizes the background information for the project site. Section 2 outlines the basis for the design of the TFIA remedy, while Section 3 describes the actual design of the remedy (e.g., standards, codes, assumptions, etc.). Section 4 presents the work plan, which describes how the remedy will be implemented in the field, both physically and from a management standpoint. The references used in the document are contained in Section 5. The appendices provide the supporting documentation for the main body of the document. Appendix A is the engineering design file verifying the drainage ditch capacity at INTEC. Appendices B and C, also engineering design files, outline the designs for Olive Avenue stormwater lift station and the evaporation pond sizing, respectively. Appendix D, another engineering design file, presents the decision analysis results and recommendation for surface-sealing the Tank Farm. Appendices E and F contain the construction specifications and the design drawings, respectively. The quality level designation for the TFIA remedy is found in Appendix G, while the detailed construction schedule is presented in Appendix H. Appendix I contains the project stormwater pollution prevention plan, Appendix J, the detailed cost estimate, and Appendix K, the procedures relevant to the remedial action (RA) activities. The operations and maintenance plan, the waste management plan, and the health and safety plan are presented in Appendices L, M, and N, respectively, and the Polyurea Demonstration Report is found in Appendix O.

2. DESIGN BASIS

The selected remedy for the TFIA has been designed to restrict potential exposure to the public from the soils within the Tank Farm and to minimize potential leaching and transport of contaminants from the soils to the perched water or SRPA. These goals will be accomplished by covering the entire Tank Farm surface and the majority of the 150-ft control zone around the Tank Farm with either a polyurea spray-on coating or asphalt, and upgrading the associated stormwater drainage system. The locations of these activities and installations are shown in Figure 1-2.

The following subsections present the control procedures, design criteria, DOE-related codes, standards and documents, engineering standards, environmental and safety applicable or relevant and appropriate requirements (ARARs), design assumptions, quality assurance program requirements, and unresolved data needs.

2.1 Design Criteria

The TFIA design is divided into the following three major components:

- **The Stormwater Drainage System Upgrade.** The stormwater drainage system will be upgraded within and around the Tank Farm and out to the discharge point. This upgrade will include: constructing, grading and lining new and existing ditches with concrete; installing a trench drain, lift station, and manholes; and replacing existing culverts with larger culverts to accommodate the expected increase in stormwater flow. It will also include constructing concrete headwalls and endwalls as necessary throughout the lined drainage system.

- **Stormwater Evaporation Pond**. A double-lined stormwater evaporation pond will be constructed outside of the INTEC fence to collect stormwater runoff that currently discharges into the environmentally controlled area (ECA) 37A (see Figure 1-2). The double liner consists of a geonet drainage layer placed between two 60-mil high-density polyethylene HDPE liners.

- **Surface Sealing.** Unpaved surfaces within the Tank Farm and the majority of the unpaved surfaces within the 150-ft control zone surrounding the Tank Farm will be sealed with either a polyurea spray-on coating or asphalt. These areas are shown in Figure 1-2.

Design criteria for each of the three components are provided in the following subsections.

2.1.1 Stormwater Drainage System

Two engineering design files (EDFs) were developed for the design of the stormwater drainage system, one to evaluate ditch and culvert capacities, and one for the design of the lift station. These EDFs are included in Appendices A and B. The stormwater drainage system design criteria include:

- Preventing surface water run-on from a 25-year 24-hour storm event

- Managing runoff to the existing stormwater drainage management system

- Designing the components of the drainage system (i.e., ditches, trench drains, culverts, manholes and the lift station) to accommodate the peak discharge from a 25-year storm event

- Using the Rational Method (standard method for designing stormwater drainage systems) for sizing the components of the drainage system

- Using excavated material as fill material if suitable as described in the Construction Specifications, Section 02200—Earthwork, provided in Appendix E

- Designing the lift station to allow for storage and connection to an existing storm drain line from the drywell shown on the drawings in Appendix F

- Sizing ditches and culverts near the outlet to accommodate drainage from the entire INTEC stormwater drainage system

- Designing the drainage system to reduce precipitation infiltration by approximately 80% of the average annual precipitation at the Tank Farm.

2.1.2 Stormwater Evaporation Pond

An EDF was developed for the design of the stormwater evaporation pond and is included in Appendix C. The design criteria include:

- Designing the pond to accommodate flow from the entire INTEC stormwater drainage system

- Designing the pond to be protected from the 100-yr flood

- Designing the pond to manage and collect runoff water from the sealed Tank Farm and surrounding areas

- Constructing and using the pond as a best management practice to reduce infiltration in the Tank Farm area

- Designing the pond to accommodate the snowmelt runoff from the 25-year snowmelt event

- Designing the pond to maintain, on average, less than six feet of water

- Calculating the runoff volume using the Soil Conservation Service (SCS) (SCS 1986) method for small watersheds

- Providing a double liner system with leak detection

- Designing the side slopes of the pond to be 3:1

- Designing for the topsoil to be stockpiled separately and covered to prevent erosion

- Constructing the outside of the berm around the top of the pond with excess excavation material from the pond, covering with topsoil and revegetating to prevent erosion

- Ensuring the tops of the pond berms are above the 100-yr flood plain elevation.

2.1.3 Surface Sealing

All unpaved surfaces within the Tank Farm and the majority of the unpaved surfaces within the 150-ft control zone around the Tank Farm will be sealed with either asphalt or a polyurea spray-on coating.

Two EDFs were developed for the polyurea spray-on coating. The first EDF presents the polyurea technology and a plan for evaluating the selection of the polyurea spray-on coating system. This EDF is included in Appendix D. The second EDF presents the results of a small demonstration of the spray-on coating and is included in Appendix O. This demonstration was conducted in anticipation of applying the material to unpaved surfaces within the Tank Farm and 150-ft control zone.

The design criteria for surface-sealing the tank farm and 150-ft control zone around the tank farm include:

- Designing the remedy to prevent exposure to personnel from soils at the Tank Farm until the final remedy is implemented under OU 3-14
- Designing the remedy to minimize precipitation infiltration by grading and surface-sealing the Tank Farm soils sufficient to divert 80% of the average annual precipitation falling on the Tank Farm soils area to the stormwater collection system
- Improving drainage to direct water away from contaminated areas
- Designing the cover system over the tank farm area to ensure that the tank farm loading restrictions are not exceeded
- Maximizing runoff and minimizing surface water ponding on the Tank Farm
- Managing runoff as part of the existing stormwater drainage management system
- Sealing all unpaved surfaces within the Tank Farm and the 150-ft control zone around the Tank Farm to direct runoff into the stormwater collection system
- Minimizing infiltration and subsequent contaminant leaching due to external building drainage by grading and sealing unpaved surfaces along the base of the building exteriors
- Ensuring the spray-on coating is durable enough to not tear, crack or degrade excessively under high traffic conditions defined as daily occurrences of foot traffic and light vehicle traffic crossing the coated areas three to four times daily
- Ensuring the spray-on coating will remain flexible and adhere to buildings and protrusions
- Ensuring the spray-on coating will be free of ridges, waves, and sags and will have a high-friction surface to provide for safe walking and driving
- Ensuring the spray-on coating will provide an effective seal to the various substrates to which it will be attached including a geotextile fabric, asphalt, concrete and wood
- Ensuring the spray-on coating will be aesthetically appealing

- Ensuring the spray-on coating will be strong enough to withstand occasional heavy loading conditions that may be encountered

- Ensuring the spray-on coating will be easily repairable.

2.2 DOE Related Codes, Standards, and Documents

The following national standards, codes and regulations, subtier standards, codes and regulations, and site-specific documents will be used as the basis for the TFIA.

- DOE-ID, 1999, Final Record of Decision for the Idaho Nuclear Technology and Engineering Center, OU 3-13 at the Idaho National Engineering and Environmental Laboratory

- DOE-ID, 2000, Remedial Design/Remedial Action Scope of Work for Waste Area Group 3, Operable Unit 3-13

- DOE-ID, 1993, Remedial Design and Remedial Action Guidance for the Idaho National Engineering Laboratory, Rev. 1

- DOE Order 5480.4A, Environmental Protection, Safety, and Health Program for the DOE Operations

- DOE Order 5820.2A, Chapter III, Low Level Radioactive Waste Management

- DOE Order 5400.5, Radiation Protection Standard

- DOE Order 0414.1, Quality Assurance

- DOE Order 232.1A, Occurrence Reporting

- DOE Order 232.1, Environmental Safety & Health Reporting

- DOE Order 440.1A, Worker Protection

- DOE Order 470.1, Safeguards and Security

- DOE-ID, Architectural Engineering Standards, Latest Edition.

2.3 Engineering Standards

Appendix E contains references to the latest engineering standards and the specifications to which they apply.

2.4 Environmental and Safety Requirements

Following is a list of potential ARARs for the Tank Farm Interim Action identified in the ROD. ARARs identified for the TFIA were either action-specific or to be considered (TBC); no chemical-specific or location-specific ARARs were identified. The ARARs for the TFIA are listed in Table 2-1, as well as the specific action(s) that will be implemented to meet them.

Table 2-1. Applicable or Relevant and Appropriate Requirements for the Tank Farm Interim Action.

Alternative/ARARs citation	Description	Applicable, or Relevant and Appropriate (R&A), or TBC	Comments
Group 1—TFIA: Alternative 3—Institutional Controls with Surface Water Control			
Action-specific			
IDAPA 16.01.05.008 (40 CFR 264.14)	Security. The owner or operator must prevent unknowing entry and minimize the possibility of unauthorized entry onto the active portion of the facility.	Applicable	The project site is located at the INEEL which has restricted access. In addition, the INTEC facility has more stringent access controls and specific signs and barriers have been placed at the site to restrict unknowing or unauthorized access. The Tank Farm itself is within a fence and is posted for restricted access.
IDAPA 16.01.05.008 (40 CFR 264.15)	General inspection requirements. The owner or operator must conduct inspections often enough to identify problems and correct them before they harm human health or the environment.	Applicable	Inspections will be performed and documented in accordance with INTEC MCPs and the operations and maintenance plan. A logbook will be maintained to demonstrate the periodic inspections have been conducted, and that corrective actions have been completed.
IDAPA 16.01.05.008 (40 CFR 264.16)	Personnel training. Personnel must successfully complete training that teaches them how to perform their duties.	Applicable	Personnel performing work at the site are trained to the hazards present at the job site, as required by the project Health and Safety Plan. Prior to the initiation of any work, the training records for all participants will be reviewed to ensure compliance with the regulatory requirements for the specific task being performed. Copies of training records will be maintained at the project site during interim action activities, and are also kept in the individuals' training file.
IDAPA 16.01.01.650, 16.01.01.651	Idaho fugitive dust emissions. All reasonable precautions shall be taken to prevent particulate matter from becoming airborne.	Applicable	Dust suppression measures will be implemented as necessary during the remedial action to minimize the generation of fugitive dust and restrict the potential spread of contamination. These measures may include water sprays, minimizing vehicle speeds, and work controls during period of high wind.

Table 2-1. (continued).

Alternative/ARARs citation	Description	Applicable, or Relevant and Appropriate (R&A), or TBC	Comments
40 CFR 122.26	Stormwater discharges during construction.	Applicable	During the interim action grading will be implemented to ensure that run-on or runoff will be directed into the appropriate collection area. Interim action activities will be performed in accordance with the project Stormwater Pollution Prevention Plan (Appendix F).
40 CFR 61.92 40 CFR 61.93	NESHAPS for Radionuclides from DOE Facilities, Emission Monitoring and Emission Compliance	Applicable	Soil disturbances are currently planned to occur above the tank farm liner. If radioactive contamination is encountered, analytical data will be collected to quantify the amount of activity released. If exposure limits are exceeded, work will be stopped and the Radiological Controls Technician will be consulted to develop appropriate measures to work within the environment.
IDAPA 16.01.01.585, 16.01.01.586	Rules for Control of Air Pollution in Idaho.	Applicable	Radiological emission levels and acceptable ambient air concentrations for carcinogens and nonarcinogens shall not be exceeded.
IDAPA 16.01.05.008 [40 CFR 264.310(b)(5)]	Run-on and runoff controls to protect final cover from erosion or otherwise damaging the final cover.	Applicable	The installation of the polyurea liner and associated ditching and pond are designed to address run-on and runoff at INTEC.
IDAPA 16.01.05.008 (40 CFR 264.553)	Temporary units containing hazardous remediation wastes generated during remedial activities, must be located within the property where the wastes to be managed originated.	Applicable	Any temporary units resulting from hazardous remediation wastes derived from construction activities will be managed according to the project specific Waste Management Plan, or as negotiated with the Regional Administrator.
IDAPA 16.01.05.008 (40 CFR 264.554)	Staging piles containing solid, non-flowing remediation waste to be used only during remedial operations for temporary storage at the facility, must be located within the property where the wastes to be managed originated.	Applicable	Any staging piles will be constructed to prevent infiltration and wind erosion by covering. The proposed staging piles are not anticipated to leave the tank farm area, and will be incorporated into the final grading prior to the installation of the polyurea liner.

Table 2-1. (continued).

Alternative/ARARs citation	Description	Applicable, or Relevant and Appropriate (R&A), or TBC	Comments
TBCs			
DOE Order 435.1	Radioactive waste management performance objectives designed to protect worker and public health and safety, in addition to the environment.	TBC	In addition to the project Health and Safety Plan, a Job Safety Analysis and/or Radiological Work Permit(s) will be prepared and implemented for tasks where there is the potential for exposure to radioactive contamination/materials, to protect human health and the environment. Radiological work permits will only be used as determined by the radiological controls technician, based on the INEEL Radiological Control Manual (INEEL Manual 15a). Radioactive waste generated during the project will be managed according to the project specific Waste Management Plan
DOE Order 5400.5	DOE facilities shall be operated and activities conducted to protect the environment and ensure exposures to public will be ALARA.	TBC	In addition to the project Health and Safety Plan, a Job Safety Analysis and/or Radiological Work Permit(s) will be prepared and implemented for tasks where there is the potential for exposure to radioactive contamination/materials, to protect human health and the environment. Radiological work permits will only be used as determined by the radiological controls technician, based on the INEEL Radiological Control Manual (INEEL, Manual 15a). Radioactive waste generated during the project will be managed according to the project specific Waste Management Plan

Action-Specific ARARs:

- IDAPA 16.01.05.008 (40 CFR 264.14), Security
- IDAPA 16.01.05.008 (40 CFR 264.15), General inspection requirements
- IDAPA 16.01.05.008 (40 CFR 264.16), Personnel training
- IDAPA 16.01.01.650, 16.01.01.651, Idaho fugitive dust emissions
- 40 CFR 122.26, Stormwater discharges during construction
- 40 CFR 61.92, NESHAPS for Radionuclides from DOE Facilities, Emission Monitoring and Emission Compliance
- 40 CFR 61.93, DOE Facilities, Emission Monitoring and Emission Compliance
- IDAPA 16.01.01.585, 16.01.01.586, Rules for Control of Air Pollution in Idaho
- IDAPA 16.01.05.008 [40 CFR 264.310(b)(5)], Run-on and Run-off Controls
- IDAPA 16.01.05.008 (40 CFR 264.553), Temporary units
- IDAPA 16.01.05.008 (40 CFR 264.554), Staging piles

TBC ARARs:

- DOE Order 435.1, Radioactive Waste Management Performance Objectives to Protect Workers.
- DOE Order 5400.5, Exposures to Public Will Be ALARA.

2.5 Management Control Procedures

Title I, II and III design activities will be performed in compliance with the applicable management control procedures (MCPs). The MCPs for this project are those identifying requirements in the following areas:

- Engineering Design
- Emergency Preparedness and Management
- Environmental Management
- Fire Protection
- Management Systems
- Occupational Safety and Health
- Radiological Protection

- Security
- Environmental Restoration and Waste Management
- Conduct of Operations
- Quality.

2.6 Status of Record of Decision Assumptions

There are no changes to the Record of Decision assumptions.

2.7 Design Assumptions

The overall bounding assumptions under which the TFIA will be performed are identified in the OU 3-13 RD/RA SOW. Design assumptions under which the individual components (i.e., lift station, surface water drainage system, stormwater evaporation pond and surface-sealing) of the TFIA will be performed are discussed in the following subsections. General assumptions for the TFIA include:

- Contaminated media, not previously identified by the OU 3-13 comprehensive RI/FS, may be discovered during TFIA activities; if so, it will be managed in accordance with the soils management strategy in the Institutional Controls Plan (DOE-ID 2000d)
- Soils found to be contaminated per ACMM-3994 (Appendix K) will be managed per the waste management plan (WMP) (DOE-ID 2000a) (Appendix M)
- The TFIA will be implemented with minimal impact from INTEC operations.
- Impact to INTEC operations will be kept to a minimum
- No excess soil will be generated during work activities performed inside the Tank Farm
- TFIA surveillance and monitoring will conclude at the startup of OU 3-14 remediation activities
- Construction activities inside the Tank Farm including minor grading, ditch construction, and geotextile and spray-on coating installation will not impact the Tank Farm load limitations as per MCP-P7.5-A1
- Minor cuts and fills within the Tank Farm will be equivalent inside individual load zones per Document Control Drawing 097726 such that there are no increased loads in any zone.

2.7.1 Stormwater Drainage System

The bounding design assumptions under which the stormwater drainage system upgrades will be performed include:

- The watershed system is linear
- All underground utilities have been identified on the drawings in Appendix F

- The time of concentration to develop the sub-areas is the sum of the overland flow time and the initial lag time (i.e., the period to fully saturate the ground before runoff occurs) and is estimated to range from 8 to 15 minutes

- The maximum rate of runoff will occur when runoff is being contributed to the outlet from the entire watershed

- The rainfall intensity is uniformly distributed over the watershed

- The design capacity for the individual drainage sub-areas is calculated for the downstream end of the areas and applied over the entire length of the drainage path.

2.7.2 Stormwater Evaporation Pond

The bounding design assumptions under which the stormwater evaporation pond will be constructed include:

- The watershed areas for collection of runoff stormwater for the evaporation pond design include only those areas inside the inner INTEC security fence

- The Soil Conservation Service (SCS) Curve Number (CN) for impermeable surfaces = 98 (SCS 1986)

- The SCS CN for the previous area was based on natural desert landscaping for western desert urban areas with a Pancheri Soil = 70 (SCS 1986)

- All precipitation occurring during months with an average temperature less than or equal to 32°F was assumed to be snow; with a monthly average temperature greater than 32°F the precipitation was assumed to be rain.

- The daily sublimation rate for accumulated snow was 0.5 mm/day (0.02 in/day) (Schmidt 1998)

- Snowmelt runoff was assumed to occur on the last day of the month when the following month had an average temperature greater than 32°F

- Snowmelt runoff was calculated using the SCS method by assuming that all accumulated snow would melt and runoff in one day (i.e., one event)

- Evaporation would not occur if the temperature was less than or equal to 32°F

- If the pond did not have the capacity to accommodate the 25-year snowmelt event of 750,000 ft^3 prior to the annual snowmelt event, it would be drained.

2.7.3 Surface Sealing

The bounding design assumptions under which the unpaved surfaces will be sealed with the polyurea spray-on coating or asphalt include:

- Minor grading will be conducted prior to placement of the asphalt or spray-on coating

- The polyurea spray-on coating is an impermeable liner
- Application of the spray-on coating or asphalt will divert a minimum of 80% of precipitation runoff from the Tank Farm
- Application of the spray-on coating will not affect the Tank Farm loading criteria
- Details regarding the application of the spray-on coating and its characteristics will be provided to Bechtel BWXT Idaho, LLC (BBWI) by the vendor, following the demonstration
- Repairs will be made to the asphalt or spray-on coating following any activities in which the integrity of the sealed surfaces is compromised
- Runoff stormwater from the sealed surface will be uncontaminated.

2.8 Plans for Minimizing Environmental and Public Impacts

The action to seal the surface and collect the runoff from the Tank Farm area is designed to mitigate the impact of run-on precipitation and its negative effect upon the further infiltration of known contaminants to the Snake River Plain Aquifer. The Health and Safety Plan, included as Appendix N, provides for the implementation of appropriate health and safety measures to protect workers during the construction phase of the Interim Action.

2.9 Quality Assurance

The quality level designations included in Appendix G have been prepared for all TFIA activities. A Quality Level of 3 has been deemed appropriate for this project. All design, procurement, and construction activities will be in accordance with the Quality Level 3 designation.

The quality program for Environmental Restoration is described in Section 13 of the Implementing Project Management Plan (IPMP) (INEEL 1997a). Section 13 of the IPMP, the Quality Assurance Project Plan for Waste Area Groups 1,2,3,4,5,6,7,10, and Inactive Sites (DOE/ID-10587), and this work plan govern the functional activities, organizations, and quality assurance/quality control (QA/QC) protocols that will be used for this project. Where applicable, the project specifications (Appendix E) shall specify the QA/QC procedures for a given task, consistent with guidance provided in the IPMP, Section 13 and the Quality Level 3 designation.

Where applicable, the project specifications (Appendix E) shall specify the QA/QC procedures for given tasks, consistent with guidance provided by PLN-125, (INEEL 1997b) and the Quality Level 3 designation.

2.10 Identification of Unresolved Data Needs

The C-40 Valve Box Project is scheduled to be completed prior to beginning OU 3-13 interim action activities within the tank farm. This C-40 project will modify the existing tank farm surface contours and may require changes to the grading plans contained within this plan. These changes will be very minor and localized only in the area of the C-40 valve box. At the completion of the C-40 project, the grading plans will be reviewed and revised, as appropriate. The Agencies will have the opportunity to review and verify that the entire installation meets the intent of this Work Plan. As-built drawings will be included in the final RA report.

3. REMEDIAL DESIGN

This section describes the remedial design for the OU 3-13 TFIA, which was developed in accordance with the engineering design basis presented in Section 2.0. The civil design specifications and drawings for the construction activities are included in Appendices E and F, respectively. The EDFs describing the design details for the stormwater collection system, lift station, and evaporation pond are presented in Appendices A, B, and C, respectively. An EDF presenting the selection process used for choosing the polyurea spray-on coating system is included in Appendix D and an EDF describing the results of the polyurea demonstration is included in Appendix O.

The physical site description and the remedial design for the stormwater drainage system, evaporation pond and surface sealing are described in the following subsections.

3.1 Physical Site Description

The TFIA activities will be conducted at the INTEC facility inside the Tank Farm and the150-ft control zone around the Tank Farm (see Figure 1-2). Activities will also be conducted along the stormwater collection system leading from the Tank Farm area to a new evaporation pond to be constructed approximately 800 feet south of the existing sewage treatment plant and 200 feet north of building CPP-698.

The Tank Farm area is approximately 5 acres with a gravel surface (see Figure 3-1). The majority of the Tank Farm is unpaved with numerous buildings and other protrusions.

In 1977, approximately 2 acres of the Tank Farm area was covered with an impermeable membrane liner followed by 2 inches of sand and 6 inches of gravel base course material. During the past 23 years, the Tank Farm area has undergone several upgrades. During these upgrades, the membrane liner was breached numerous times. Attempts were made to repair the liner, but no adhesive would bond the old and new liners together. The current condition of the liner is unknown because it is covered with gravel. The current thickness of the gravel covering the liner is also unknown due to traffic and various construction activities that have been conducted over the past 23 years. There are also holes in the liner around the perimeter of risers, pipes and valve boxes.

The 150-ft control zone around the Tank Farm area consists of buildings, roads, sidewalks, ditches and other graveled areas. The graveled areas are generally not compacted and consist of loose fill. The existing storm drainage system is in poor condition and does not carry the stormwater runoff from the area efficiently. Stormwater collects in the ditches and low spots within the 150-ft control zone and does not flow downstream to the outlet. The ditches are unlined and large amounts of sediment collect in culverts between ditches.

The Tank Farm is graded with an east-west crown in the middle so that from the crown, the area slopes down to the north and south.

A concrete electrical duct bank blocks surface runoff flowing north from the crown in the Tank Farm. Runoff flowing south from the crown ponds in a low spot at the toe of the slope on Fir Street (access road to building CPP-604). This area does not drain to the existing culvert downslope. A concrete swale runs along the north section of Beech Street west of the Tank Farm. The swale does not have proper drainage and stormwater first ponds in this area, then spills over the eastern edge of the swale into the gravel area along the fence line.

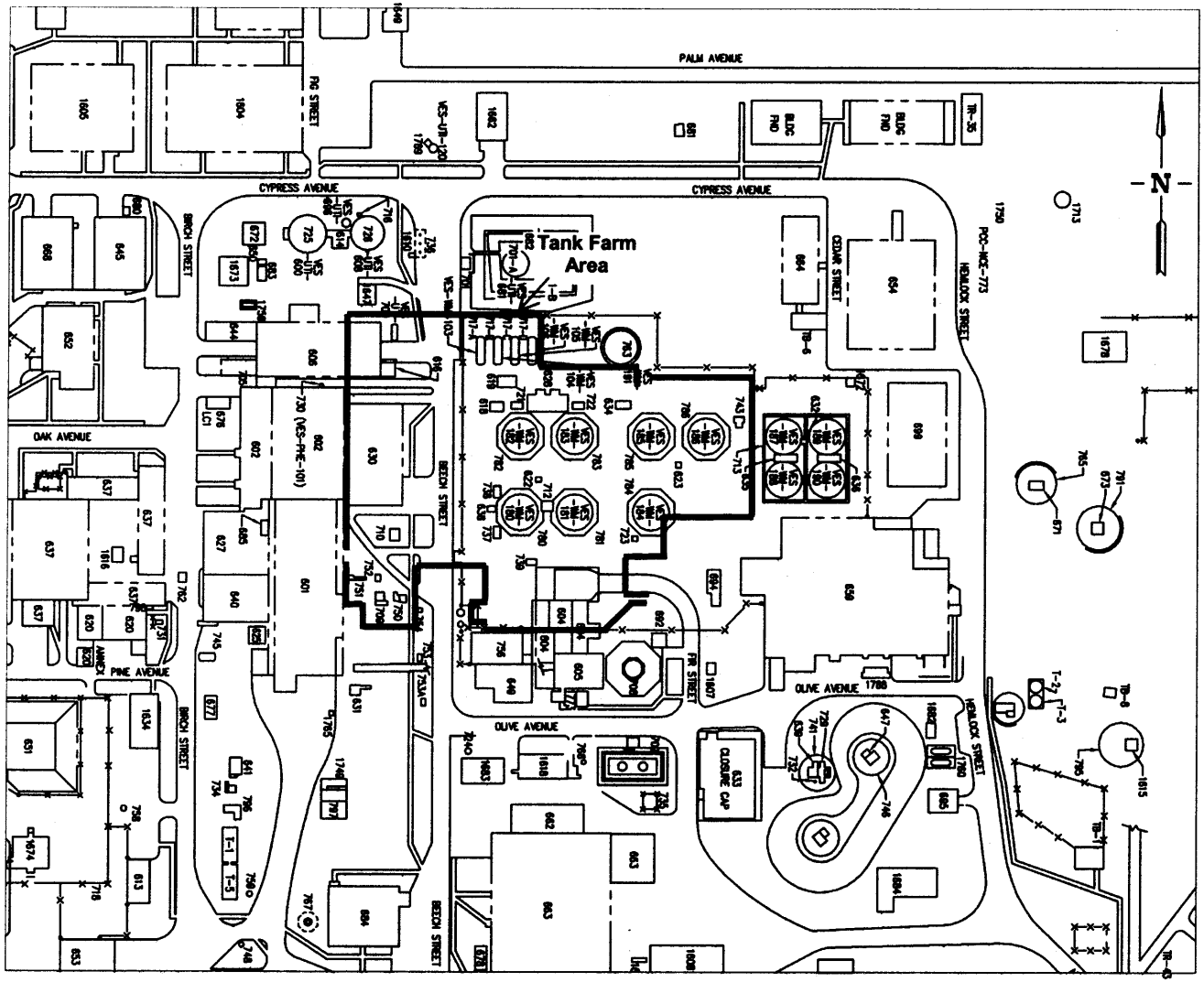

Figure 3-1. Tank Farm area with street names and building numbers.

The earthen ditch north of the Tank Farm, on the south side of Cypress Avenue, also does not drain properly. The side slopes for the ditches are eroded and the inverts are filled with fine sand and debris. The culvert at the eastern end of this ditch, running under Cypress Avenue, is approximately 50% filled with debris and fine sand.

The eastern side of the Tank Farm, just west of the concrete sidewalk on the west side of CPP-699, is lower than the surrounding area.

There is no defined drainage system south of the Tank Farm. The finish floor elevations for buildings CPP-649, CPP-659 and CPP-604 are lower than the surface of Olive Avenue. Stormwater from the surrounding area flows to the low spots and seeps underground. There is a catch basin at the southwest corner of building CPP-649 which is connected to an abandoned dry well on the south side of Olive Avenue by a 12-in. diameter drain pipe.

All stormwater runoff within the INTEC facility flows downslope except as discussed and is collected in a 58 × 36-in. culvert near the intersection of Palm Avenue and Lodge Pole Street in the northeast corner of the facility. This culvert runs under the security fences and discharges into ECA-37A, which is an unlined pit south of the sewage treatment plant.

3.2 Stormwater Collection System

The stormwater collection system will be upgraded within and around the Tank Farm and out to the discharge point. This upgrade will include grading and constructing new ditches, regrading and lining the existing ditches with concrete, installing a trench drain along Beech Street, and replacing existing culverts with larger culverts to accommodate the expected resulting increase in stormwater flow. It will also include constructing concrete headwalls and endwalls as necessary throughout the lined drainage system and constructing one lift station (discussed further below). An EDF for the design of the stormwater drainage system to evaluate ditch and culvert capacities is included in Appendix A. Specifications and drawings for the upgrades to the stormwater collection system are included in Appendices E and F, respectively.

The Rational Method (standard method for designing stormwater drainage systems) was used for sizing the ditches and culverts to accommodate the peak discharge from a 25-year storm using the assumptions and design criteria discussed previously. The maximum rainfall intensity for the 25-year storm was determined using the time of concentration for the drainage area (i.e., the time it takes precipitation to flow from the farthest point in the watershed to the outlet). Thus, it represents the instantaneous peak for that area regardless of the duration of the storm event. As a result, sizing derived by the Rational Method will suffice for both the 25-year 24-hour storm event and the 25-year 6-hour storm event.

3.2.1 Lift Station

The lift station will be located in the low spot at the intersection of Olive Avenue and Beech Street to prevent flooding there. An EDF for the design of the lift station is included in Appendix B. Specifications and drawings for construction of the lift station are included in Appendices E and F, respectively.

The lift station will be 10 feet in diameter and 15.8 feet deep, to accommodate the storage and depth required for connecting to an existing storm drain line. The depth of the existing line is maintained because the effort required to re-route it through or around the utility tunnel running east to west down

Olive Avenue is prohibitive. The existing line flows into a dry well that will be partially filled with concrete to eliminate infiltration and will then act as a catch basin.

This dry well is currently used for steam condensate and surface water runoff disposal. The dry well is identified in the INTEC Shallow Injection Well Inventory as CPP-663 SI-SD-SB. The well has only one influent line and no effluent lines.

The storage volume of the lift station will be approximately 3,500 gallons. Two 7.5 hp submersible pumps will be installed in the lift station. Each pump is sized to accommodate a flow of 603 gpm, the design flow from a 2-year storm event, which is expected to occur often. When both pumps are operating, they will be able to accommodate the design flow from a 25-year storm, approximately 1,230 gpm. The flow from the pumps will be directed through an 8-inch diameter pipe approximately 400 feet long. The 8-inch diameter force main is required to limit head loss within the pipe and keep velocities at acceptable levels. The force main will run east along Olive Avenue and discharge into the stormwater collection ditch just west of building CPP-659.

3.3 Evaporation Pond

A double-lined stormwater evaporation pond with a leak detection system will be constructed outside of the INTEC fence, approximately 300 feet north of building CPP-698, to collect stormwater runoff that currently discharges into ECA 37A. An EDF for the design of the evaporation pond is included in Appendix C. Specifications and drawings for the evaporation pond are included in Appendices E and F, respectively.

Using the SCS method for calculating runoff from small watersheds described in SCS Technical Memorandum – 55 (SCS 1986) for the 25-year snowmelt event, approximately 750,000 ft^3 of runoff will discharge from the facility and be collected in the evaporation pond. This volume of runoff water was calculated for the entire INTEC watershed system. The pond is sized to evaporate this volume of water during one year based on a net evaporation rate of 34 inches per year. With 3:1 side slopes, the area at the bottom of the pond is approximately 75,000 ft^2.

The depth of the pond is 21 feet from the top of the berm, and the top of the berm is approximately 4 feet above the existing ground surface. The pond excavation volume is roughly 57,000 yd^3, excluding the 11,000 yd^3 of fill to be replaced for construction of the berm. Two 24-inch diameter outlets with canal gates will be installed on the west side of the pond at elevation 4,908 ft. If the water in the pond rises to this elevation, there will still be approximately 2 feet of freeboard in the pond before the water reaches the tops of any of the ditches in the facility.

The pond will be compacted, then lined with a non-woven geotextile fabric, followed by an impermeable 60-mil HDPE liner and HDPE drainage net (geonet) and another 60-mil HDPE liner. The liners will extend up to the top of the berm where they will be anchored into the ground. Ballast blocks will be set across the bottom and sides of the pond on a 50-ft grid to keep the liner in place.

The leak detection system will be constructed to contain and measure leakage that may penetrate the primary (top) liner. The bottom of the pond will be sloped to a 20 ft × 20 ft × 2 ft deep sump. The non-woven geotextile fabric and secondary (bottom) liner will be placed across the bottom of the sump and a 12-inch diameter pipe will run down the slope of the berm and into the sump. The portion of the pipe in the sump will be perforated to collect water that may accumulate in the sump. The sump will then be filled with approximately 2 feet of drain rock and covered with the drainage net and primary liner. A portable submersible pump will be installed in the pipe inside the sump. The pond and double liner system are shown in Appendix F, drawings C-19–C-24. The pump will be controlled using high-and-

low-level switches attached to the pump and pump piping. The pump will turn on when the sump is full of water and turn off after it has been emptied. The water in the sump will be pumped to the top of the berm, where it will flow through a totalizer to measure the volume, and then back down into the pond.

The outer berm will be constructed at a 3:1 slope down to the existing surface elevation. Topsoil, stockpiled separately from the excavation material, will be placed on the outside of the berm and will decrease the slope to 4:1. All disturbed areas around the pond and on the outer berm will then be revegetated in accordance with the specifications. A security fence will also be constructed around the pond to keep unauthorized visitors and wildlife out of the area.

3.4 Surface Sealing

Unpaved/gravel surfaces within the Tank Farm and the 150-ft control zone surrounding the Tank Farm will be sealed with asphalt or a polyurea spray-on coating (Figure 1-2). The remedial design for sealing all the unpaved surfaces includes grading, compacting, and paving or applying the polyurea spray-on coating.

Grading and compaction will ensure precipitation runoff will flow towards the stormwater drainage system. For areas that will be sealed with the spray-on coating, a geotextile fabric will be placed and anchored over the graded and compacted and gravel surfaces, and the polyurea spray-on coating will be applied. The specifications and drawings for grading and installing either the asphalt paving or the geotextile liner and polyurea coating are included in Appendices E and F, respectively.

3.5 Subcontractor Staging

Subcontractor laydown and stockpile areas will be necessary both inside and outside the INTEC facility to stage equipment and materials close to the work. The staging areas will be located so that noncontaminated materials and equipment operating in work areas will be isolated from materials and equipment operating in contaminated areas.

4. REMEDIAL ACTION WORK PLAN

This section describes the management approach to conducting the interim action, the work elements of the interim action, the associated schedule, and the documentation required to perform the action and to document its completion. As the remedial design and the remedial action work plan are combined into one document for this project, some details of the implementation have already been described, in the design sections of this document.

4.1 Relevant Changes to the RD/RA SOW

The RD/RA SOW depicts the Tank Farm Interim Action as two different phases of design and action. This document has combined both phases into one complete design and action with no elimination of design or construction work scope.

4.2 Subcontracting Plan

The work elements comprising this interim action consist primarily of earthwork, including grading of in-place soils to promote surface drainage, excavation of new ditches and culverts, surface-sealing the Tank Farm and adjacent areas, and all earthwork necessary to construct the evaporation pond. Other work includes lift station construction, fence installation, and concrete work.

All of this work is planned to be competitively bid and awarded as a firm, fixed price subcontract. BBWI's procurement process will be followed and will include, but is not limited to, issuance of a Request for Proposal (RFP), pre-bid conference, bid evaluation, notice of award, notice to proceed, vendor data submittals, and a pre-construction kickoff meeting. The work elements described in this work plan may be performed under a single subcontract or several subcontracts. The liner system installation and polyurea coating application will be subtier contracts to the primary subcontract. Site force account personnel may perform a portion of this work, if necessary. Both subcontract and site personnel will be required to perform to the schedule outlined in Appendix H in order to meet the overall project schedule and objectives.

4.3 Remedial Action Work Elements

The following sections identify the work elements required to implement and complete the Tank Farm interim action. Additional detail can be found in the project design drawings, technical specifications and the RFP, when it becomes available.

4.3.1 Pre-mobilization

Requirements for vendor data submittals, training, and medical information specified by the design specifications and INEEL-specific requirements will be provided in the RFP. The subcontractor will provide all required documentation, bonds, and insurance, and proof that all required training and medical examinations are complete as per the project-specific HASP (INEEL 2000c) before the subcontractor will be allowed to mobilize. These submittals will certify that the subcontractor can meet and satisfy the requirements of the RFP and the project.

4.3.2 Mobilization

Mobilization is the work performed by the subcontractor in preparation for construction activities. This work generally implements the project- and site-required administrative, engineering, and health and

safety controls. Mobilization will include such activities as set-up of subcontractor site offices; demarcation of parking areas, equipment and material laydown areas, and work zones; and installation of signs, postings and fences. Since some of the interim action activities will be performed inside the INTEC facility fence (e.g., Tank Farm surface grading) and some outside the facility fence (e.g., construction of the evaporation pond), separate laydown areas, work zones and postings will likely be required. Coordination of these activities, particularly those occurring within the INTEC facility fence, will be required between contractor, subcontractor and facility personnel to ensure that these activities have minimal impact on facility operations and maintenance.

4.3.3 Stormwater Drainage System

This work activity involves the upgrade of selected ditches and replacement of culverts around the Tank Farm, and all activities associated with this work. The specific work elements, listed below, will be performed in accordance with the specifications contained in Appendix E.

- All existing stormwater collection ditches around the Tank Farm and out to the specified discharge point will be graded and lined with concrete.
- Selected existing culverts around the Tank Farm and out to the specified discharge point will be replaced with larger culverts to accommodate the expected increase in stormwater flow, resulting from improved stormwater collection.
- Concrete headwalls and endwalls will be constructed as necessary throughout the lined drainage system.
- Two concrete-lined ditches will be constructed within the Tank Farm to collect and direct precipitation runoff to the surrounding stormwater collection system.
- A lift station will be constructed at the intersection of Beech Street and Olive Avenue to pump stormwater to a location where it will drain freely to the specified discharge point.
- Three manholes will be installed.
- A trench drain will be installed.

4.3.4 Stormwater Evaporation Pond

A lined stormwater evaporation pond will be constructed to collect stormwater runoff from the Tank Farm and other INTEC areas that currently drain into ECA 37A (see Figure 1-2). The pond will be located east of the INTEC perimeter fence, and south of ECA 37A and the existing sewage treatment plant. Approximately 21 ft deep, with bottom dimensions approximately 240 ft × 320 ft, the pond will be double-lined with a leak detection system and be constructed in accordance with the specifications and drawings found in Appendices E and F, respectively. All stormwater drainage ditches and culverts within the scope of this project will be routed to this pond, and a new chainlink fence will be constructed around it as a wildlife and personnel safety precaution.

Approximately 57,000 yd^3 of soil will be excavated during this project. Excess soil that is not needed for construction of the pond or is not suitable for backfill will be screened per ACMM-3994 (Appendix K) and managed per the project waste management plan (DOE-ID 2000a). Clean soil will be stockpiled for future use inside the area of contamination.

4.3.5 Surface Sealing

An impermeable covering will be applied to all unpaved surfaces within the tank farm fence and to the majority of the unpaved surfaces within the 150-ft control zone to minimize infiltration into the underlying soils. Within the tank farm fence, a polyurea spray-on coating will be applied; within the 150-ft control zone a polyurea spray-on coating will be applied to selected areas. The areas to be sealed are shown in Figure 1-2.

The polyurea spray-on coating was evaluated by conducting a product demonstration. The results of the polyurea demonstration are contained in the OU 3-13 Tank Farm Interim Action Polyurea Demonstration Report contained in Appendix O (INEEL/EXT-2000-00929). Information obtained during the demonstration has been incorporated into the construction specifications in Appendix E.

4.3.6 Stormwater Management and Sediment Control

The subcontractor shall be required to read, sign, accept, and comply with the Stormwater Pollution Prevention Plan developed for this project. The Stormwater Pollution Prevention Plan, found in Appendix I of this plan, outlines the measures the subcontractor must follow in order to be in compliance with INEEL rules and regulations regarding control of stormwater and associated sediment.

4.3.7 Clearing and Grubbing the Sites

The subcontractor shall clear the work sites of vegetation and/or debris as required, in accordance with the project specifications (Appendix E). The subcontractor shall confine clearing and grubbing activities to those areas required for barrier construction, roadwork, and evaporation pond construction. Disturbance of underlying soils shall be minimized during performance of these activities, and any areas outside the designated areas that are damaged or disturbed by the subcontractor's activities shall be repaired and reseeded, if necessary, by the subcontractor, in accordance with the appropriate specifications (Appendix E).

4.3.8 Dust Control

Precautions such as water spray, wind monitoring, and/or visual observation will be used during any earthmoving activities to prevent the generation of fugitive dust. Air monitoring may be performed at the discretion of the radiological control technician (RCT) or the industrial hygienist based on their evaluation of the effectiveness of the dust suppression measures to control the spread of contamination through fugitive dust. Personal protective equipment, when required, shall be used as specified in the project-specific HASP and as determined by the radiological control technician or industrial hygienist present at the job site.

4.3.9 Site Reclamation

Upon completion of all interim action activities, reclamation of the work sites shall be performed, including areas adjacent to any barriers disturbed during construction, laydown areas, and all areas affected by road work and borrow and stockpiling activities. Seeding and mulching shall be performed in accordance with the requirements identified in the revegetation specification found in Appendix E.

4.3.10 Operations and Maintenance

The drainage upgrades and the surface-sealing measures are designed as passive operations using gravity and the region's climate to control the collection and evaporation of runoff precipitation from the

Interim Action areas. The only exception is a single lift station composed of two pumps to transfer water from a low point to the nearest drainage ditch. Maintenance activities are directed to the upkeep of the lined ditches, patching of the pond liner, maintenance of the lift station components, and repairs of the surface sealant as required. For specific details, refer to the Operations and Maintenance (O&M) Plan in Appendix L.

4.3.11 Demobilization

Following completion of all interim action activities and decontamination of equipment, the subcontractor will demobilize from the site. The subcontractor will remove the office trailer and ancillary equipment from the site. Temporary fencing and signage, and a decontamination pad, if used, will be removed and disposed of appropriately.

4.4 Evaluating Remedial Action Against Performance Measurement Points

4.4.1 Evaluating Infiltration Reduction in the Tank Farm

Comparing future volumes of water pumped from the tank vaults compared to the historical amounts is one possible means of measuring infiltration reduction in the Tank Farm. This would assume that water being collected in the vaults is a short-term result of normal precipitation events.

Associating future amounts with historical amounts of collected water in the evaporation pond is another possible measure of effectiveness, provided an accurate model could be developed and appropriately tested during actual rainfall events. This would assume the pond and the sealant applications are functioning effectively.

4.4.2 Monitoring Evaporation Pond Performance

The evaporation pond will be a double-lined impoundment with a leak detection system. The system is constructed so that any water that may leak through the primary liner (top liner) will flow through the drainage layer between the two liners to a sump where it will be collected. The water collected in the sump will be pumped out and over the top of the pond berm and back into the pond. A totalizer will be placed in the piping to measure the volume of water pumped out of the sump. This volume will be monitored as described in the O&M Plan in Appendix L to evaluate the effectiveness of the pond liner system. If the leakage rate is greater than the maximum allowable rate of 1/8 inch per acre day (3,400 gal/acre/day), the leak or leaks will be located and the liner will be repaired.

4.5 Field Oversight/Construction Management

The DOE-ID remediation project manager will be responsible for notifying the EPA and IDEQ of major project activities (e.g., project start-up or closeout) and other project activities, as it deems appropriate. DOE-ID will serve as the single interface point for all routine contact between the EPA and IDEQ and BBWI, the RD/RA contractor.

BBWI is responsible for field oversight and construction management services for this project, and will provide field support for health and safety, quality assurance, and landlord services. A project organization chart and associated position descriptions are provided in the project-specific HASP (INEEL 2000c).

Visitors to the project site who wish to observe the interim action construction must meet badging and training requirements necessary to enter INEEL facilities. Project-specific training requirements for visitors are described in the project-specific HASP.

4.6 Project Cost Estimate

The total project construction costs are estimated to be $4,694,917. The detailed project cost estimate is provided in Appendix J. The costs will be revised for each submittal of this work plan to reflect comments received.

4.7 Project Schedule

The remedial action schedule for the Tank Farm Interim Action is presented in Appendix H, and includes all project tasks from preparation of this work plan through performance of the interim action to submittal of the final RA Report. Administrative and document preparation activities are based on an 8-hour day, 5-day work week, while field activities are based on a 10-hour day, 4-day work week. This schedule assumes concurrent contractor and DOE-ID document reviews. There is no schedule contingency for delays due to late or slow document reviews, or for field activities impacted by adverse weather conditions. Table 4-1 lists planned primary and secondary project documents and their submittal dates to the Agencies.

Table 4-1. Schedule of primary and secondary document deliverables.

Document	Enforceable/Target	SOW Working Plan	RD/RA WP
Draft RD/RA Work Plan	05/04/2000	05/01/2000	05/01/2000
Draft Prefinal Inspection Report	03/15/2002	05/02/2001	01/15/2002
Draft RA Report	07/29/2002	06/27/2002	07/17/2002

4.8 Inspections

The following sections describe the inspections planned for the TFIA and associated documents. In addition to these inspections, the Agency project managers or their designees may, at their discretion, inspect the site during the construction phase of the interim action to assess compliance with the remedial design and the requirements outlined in this work plan. These inspections may be conducted at any time during the interim action.

4.8.1 Prefinal Inspection

A prefinal inspection will be conducted by the Agency project managers at, or prior to, completion of the Tank Farm interim action activities. The contractor will develop a Prefinal Inspection Checklist for use by the Agencies in conducting the inspection. The checklist, which will focus on RA elements significant to meeting the ROD requirements, will identify specific activities, procedures, or other items agreed upon by all parties to be inspected that will constitute acceptance of the interim action activities. DOE-ID will notify the Agencies approximately 2 weeks prior to the prefinal inspection date.

4.8.2 Prefinal Inspection Report

Following the inspection, the Prefinal Inspection Report will be prepared and submitted to the Agencies as a secondary document. Although DOE-ID will respond to comments received from EPA and IDEQ, the Prefinal Inspection Report will not be revised. Instead, the comments will be resolved in the context of the Remedial Action Report, a primary document, in accordance with Section 8.4 of the FFA/CO (DOE-ID 1991). The Prefinal Inspection Report will include:

- Names of the inspection participants
- Completed inspection checklist identifying deficiencies and/or outstanding interim action requirements
- Discussion of findings
- Corrective action required to resolve deficiencies
- Schedule for completion of corrective actions
- Date of final inspection
- Operation and Maintenance Plan update.

All of the deficiencies and outstanding items, along with the actions required to resolve them, will be identified and approved by the Agencies during the prefinal inspection. The Prefinal Inspection Report will then document any unresolved items and the action(s) required to resolve them.

4.8.3 Final Inspection

The final inspection will be conducted following demobilization, when all excess materials and nonessential remediation equipment have been removed from the site. Some equipment may remain onsite to repair items observed during the final inspection. The final inspection, conducted by the Agency project managers, will confirm the resolution of all outstanding items identified in the prefinal inspection and verify that the TFIA has been completed in accordance with the requirements of the ROD (DOE-ID 1999).

4.9 Remedial Action Report

The Remedial Action Report for the TFIA will be prepared following demobilization and final inspection, and submitted to the Agencies as a primary document. This report will include:

- A synopsis of the interim action work defined in the RD/RA Work Plan and certification that this work was performed
- Explanation of any modifications to the RD/RA Work Plan, including the purpose for and the results of the modification
- Discussion of issues encountered during remediation and their resolution
- Brief description of outstanding items from the prefinal inspection, as documented in the Prefinal Inspection Report

- DOE-ID will provide a statement certifying that the remedy is achieving, or has achieved, the requirements of the ROD
- Discussion of the results of the final inspection
- Updated Operation and Maintenance Plan
- As-built drawings showing final contours and configurations
- Final total costs of the RA.

4.10 Decontamination

When the interim action is complete, exposed surfaces of equipment used for excavation and soil spreading will be decontaminated at designated decontamination areas in each work zone by brushing and wiping until all visible traces of soil and soil-related staining have been removed. If all soil/staining cannot be removed by simple brushing and wiping, decontamination solutions (e.g., water) will be used. All rags, brushes, and spent decontamination solutions will be managed per the project WMP (DOE-ID 2000a).

4.11 Operation and Maintenance

The project O&M Plan (DOE-ID 2000b) identifies inspection and maintenance requirements to be implemented following completion of the TFIA. The plan also identifies the requirements for periodic reporting and identification of endpoints for O&M. Maintenance activities are anticipated to continue until the final OU 3-14 RD/RA Work Plan is complete, at which time, OU 3-14 remediation activities will begin. This O&M plan is a draft, and will be revised and updated as pertinent information is received from the equipment manufacturers. Upon receipt of manufacturers' suggested O&M, repair manuals, etc., this plan will be finalized and submitted with the RA report.

4.12 Waste Management

The following waste streams are expected to be generated as a result of the TFIA remediation activities:

- Personal protective equipment
- Decontamination materials
- Non-contaminated project waste
- Soil and debris.

Ultimate disposition of these waste streams will depend on whether they are radionuclide-contaminated. A description of the anticipated project wastes and their appropriate disposition are provided in the project WMP (DOE-ID 2000a).

4.13 Health and Safety

A project-specific HASP (INEEL 2000c) was prepared specifically for the tasks and conditions expected during implementation of this project. The HASP, which may be updated as site and project conditions dictate, includes the following elements:

- Task site(s) responsibilities
- Personnel training requirements
- Occupational medical program and medical surveillance
- Safe work practices
- Site control and security
- Hazard evaluation
- Personal protective equipment
- Decontamination and radiation control
- Emergency response plan for the task site(s).

4.14 Spill Prevention/Response Program

All hazardous materials will be stored and handled in a safe manner to prevent spillage. Preventative spill containment will be required and implemented per the manufacturers' recommendations. Any inadvertent spill or release of potentially hazardous materials (i.e., equipment fluids) will be subject to the substantive requirements contained in the INEEL Emergency Plan/Resource Conservation and Recovery Act Contingency Plan (RCRA) (INEEL 1998) and the INEEL Emergency—Addendum 2 Idaho Chemical Processing Plant.

Handling of the material and/or substance shall be in accordance with the recommendations of the applicable material safety data sheets, which will be located at the project site(s). In the event of a spill, the emergency response plan outlined in the project HASP will be activated. All materials/substances at the work site shall be stored in accordance with applicable regulations and stored in approved containers.

4.15 Other Procedures Relevant to RA Activities

The method for determining the gamma levels in excess soil generated from the TFIA activities, ACMM-3994 "In-Situ Gamma Radiation Measurements of Soils," is included in Appendix K to this work plan. Other procedures required for performance of the TFIA will be identified as needed and included in the appropriate project documentation.

5. REFERENCES

Burgess, 1991, *ICPP 25-Year, 24-Hour Flood Characterization*, J. D. Burgess Letter File, JDB-05-91, July.

DOE-ID, 1991, *Federal Facility Agreement and Consent Order for the Idaho National Engineering Laboratory,* U.S. Department of Energy Idaho Operations Office, U.S. Environmental Protection Agency Region 10, State of Idaho Department of Health and Welfare.

DOE-ID, 1999, *Final Record of Decision Idaho Nuclear Technology and Engineering Center,* U.S. Department of Energy Idaho Operations Office, DOE/ID-10660, October.

DOE-ID, 2000a, *Waste Management Plan for the INTEC Operable Unit 3-13 Tank Farm Soils Interim Action*, April.

DOE-ID, 2000b, *Operation and Maintenance Plan for the INTEC Operable Unit 3-13 Tank Farm Soils Interim Action,* April.

DOE-ID, 2000c, *Remedial Design/Remedial Action Scope of Work for Waste Area Group 3, Operable Unit 3-13*, U.S. Department of Energy Idaho Operations Office, DOE/ID-10721, February.

DOE-ID, 2000d, *Institutional Control Plan for the Idaho Nuclear Technology and Engineering Center, Waste Area Group 3, Operable Unit 3-13,* U.S. Department of Energy-Idaho Operations Office, DOE/ID-10729, May.

DOE-ID, *Quality Assurance Project Plan for Waste Area Groups 1, 2, 3, 4, 5, 6, 7, 10, and Inactive Sites,* U.S. Department of Energy Idaho Operations Office, DOE/ID-10587.

INEEL, 1997a, *Implementing Project Management Plan,* Idaho National Engineering and Environmental Laboratory, INEEL/EXT-97-00032.

INEEL, 1997b, *Quality Program Plan for the Environmental Restoration Program*, Idaho National Engineering and Environmental Laboratory, PLN-125 (formerly QPP-149), current issue.

INEEL, 1998, Manual #16: *INEEL Emergency Plan/RCRA Contingency Plan*, Idaho National Engineering and Environmental Laboratory, current issue.

INEEL, 2000, Manual 16A-2, *Emergency Preparedness—Addendum 2 Idaho Chemical Processing Plant,* Idaho National Engineering and Environmental Laboratory, PLN-114-2, current issue.

INEEL, 2000c, *Health and Safety Plan for Waste Area Group 3, Operable Unit 3-13, Group 1 Soils Tank Farm Interim Action*, INEEL/EXT-2000-00194, August.

INEEL, Manual #15A: *Radiological Controls Manual*, Idaho National Engineering and Environmental Laboratory, current issue

NOAA, 1989, *Climatography of the Idaho National Engineering Laboratory*, 2nd Edition, Editors K. L. Clawson, G. E. Start, N. R. Ricks, U.S. Department of Commerce, NOAA, DOE/ID-12118, December.

Sagendorf, 1996, *Precipitation Frequency And Intensity at the Idaho National Engineering Laboratory,* J.F. Sagendorf, NOAA Technical Memorandum ERL ARL-215, September.

Schmidt, R. A., C. A. Troeudle and J. R. Meiman, 1998, *Sublimation of Snowpacks in Subalpine Conifer Forests*, Canadian Journal of Forest Research, Volume 28, Number 4, Pages 501-513, April.

SCS, 1986, *Urban Hydrology for Small Watersheds,* Soil Conservation Service, Technical Release – 55, June.

Appendix A

Engineering Design File

Drainage Ditch Capacity Verification at INTEC

Document ID : EDF-1387

Revision : 0

ENGINEERING DESIGN FILE

SUBCONTRACT NO. **S00-588051**

PROJECT FILE NO. **020978**

OU 3-13 Group 1 Tank Farm Interim Action Phase 1 and 2

DRAINAGE DITCH CAPACITY VERIFICATION AT INTEC

INEEL

Idaho National Engineering & Environmental Laboratory

BECHTEL BWXT IDAHO, LLC

Form 412.14
10/05/99
Rev. 02

ENGINEERING DESIGN FILE

PROJECT FILE NO. 020978

EDF SERIAL NO. EDF-1387

FUNCTIONAL FILE NO. N/A

PROJECT/TASK OU 3-13 Group 1 - Tank Farm Interim Action Phase 1 & 2

SUBTASK Ditch Sizing

TITLE DRAINAGE DITCH CAPACITY VERIFICATION AT INTEC

SUMMARY

The Waste Area Group 3, Operable Unit 3-13 Record of Decision (ROD) for the Group 1 - Tank Farm Interim Action requires installation of engineering controls to reduce water infiltrating into the contaminated tank farm soils. This Interim Action includes upgrading the existing storm water runoff collection system in the tank farm including a 150-ft drainage control zone around the tank farm and constructing a lined evaporation pond where storm water runoff from the INTEC facility will be collected. The ROD requires the storm water collection system to accommodate a 25-year 24-hour storm event.

This EDF summary is for the design of the concrete lined ditches and culverts to be located throughout the northeast portion of INTEC. The components of the system were sized to carry the peak discharge from a 25-yr storm event. Table 3 shows a summary of each component's design flow versus it's respective capacity. Attached to this EDF are worksheets and figures used for sizing of the individual components.

Assumptions:

1. Design capacity for the drainage sub-area is calculated for the downstream end of the area and applied over the entire length of the drainage path.
2. The Rational Method was used for calculation/sizing of the ditches and culverts. In using the Rational Method, the maximum rainfall intensity for a design year storm is determined by the time of concentration for the drainage area. Thus, it represents the instantaneous peak for that area regardless of the duration of the storm event. As a result, sizing derived by the Rational Method will suffice for the 25-year 24-hour storm event as well as the 25-yr 6-hr storm.
3. The rainfall intensity, i, is constant over the storm duration.
4. The rainfall is uniformly distributed over the watershed.
5. The maximum rate of runoff will occur when runoff is being contributed to the outlet from the entire watershed.
6. The peak rate of runoff equals some fraction of the rainfall intensity.
7. The watershed system is linear.

QUALITY LEVEL ☐ 1 ☐ 2 ☒ 3

KEYWORDS (e.g. area, structure no., general subject matter, etc.) : Lift Station, Force Main, Olive Avenue, Storm Water

AUTHOR

PROFESSIONAL ENGINEER REGISTERED 9404 9/18/00 STATE OF IDAHO KURT D. FRITZ

Kurt D. Fritz

DISTRIBUTION (COMPLETE PACKAGE):

DISTRIBUTION (COVER SHEET ONLY):

CHECKED	DATE	APPROVED/ACCEPTED	DATE
S Austad for W. S. Liu	9/18/00	S. A. Davies, P.E.	9/18/00
BBWI Review	DATE	BBWI Review	DATE

SUMMARY (Continued)

References:

1. DOE-ID, *Final Record of Decision for the Idaho Nuclear Technology and Engineering Center, OU3-13 at the Idaho National Engineering Laboratory*, USDOE-ID, USEPA, IDHW, DOE-ID-10660, October,1999.
2. Highway Drainage Guidlines, Storm Drainage Systems, Dan Ghere et al., 1987
3. SCS, Urban Hydrology for Small Watersheds, Soil Conservation Service, Technical Release - 55, June, 1986.
4. Hydrologic Analysis and Design, Richard H. McCuen, Prentice Hall, Englewood Cliffs, New Jersey, 1989.
5. Field Survey
6. Flowmaster Engineering Software, Version 5.13, Haestad Methods, Inc., 37 Brookside Road, Waterbury, CT, 1995.
7. Vendor Data Catalog, ACO Trench Drains Systems Manual.
8. Handbook of Steel Drainage & Highway Construction Products, American Iron and Steel Institute, Fourth Edition, 1993.

Table 1 - Design Flow

Alignment (1)	From (2)	To (2)	Component (3)	T_{ca} (min)	T_{ta} (min)	T_c (min)	I (in/hr)	A (acre) (4)	CA (5)	Q from LS (cfs)	Q_T (cfs) (6)
Alignment 1	A2	LS	Trench Drain	20	-	20	1.5	2.75	1.81		2.72
Alignment 2	C5	C4	Conc. Ditch	19	-	19	1.6	2.43	1.97	2.72	5.88
	C4	C3	Conc. Ditch	17	0.8	19.8	1.52	3.80	3.20	2.72	7.59
	C3	C2	Conc. Ditch	16	1.14	20.94	1.5	4.52	3.51	2.72	7.98
	C2	C1	Conc. Ditch	16	0.6	21.54	1.47	5.31	3.87	2.72	8.41
	C1	B1	35"x24" CMPA	-	-	-	-	-	-	-	8.41
Alignment 3	C6	C5	Conc. Ditch	17	-	17	1.7	0.73	0.55		0.93
Alignment 4	A1	A2	Type I Conc. Ditch	15	-	15	1.8	0.51	0.46		0.82
	A2	A4	Conc. Ditch	17	1.39	17	1.7	1.86	1.47		2.49
	A4	A5	Conc. Ditch	18	1.2	18.2	1.65	3.59	2.90		4.79
	A5	A6	Type III Conc. Ditch	15	1	19.2	1.59	8.08	5.66		9.00
	A7	A8	Type III Conc. Ditch	15	0.62	19.82	1.52	10.80	7.96		12.09
	A8	A9	Type III Conc. Ditch	20	0.5	20.32	1.49	13.49	8.92		13.30
	A9	A10	Type III Conc. Ditch	20	2.4	22.22	1.4	15.54	9.91		13.87
	A10	D2	Existing Culvert	40	-	40	1	60.00	30.00		30.00
Alignment 5	C7	C4A	Type 1 Conc Ditch	15	-	15	1.8	0.69	0.62	-	1.12
Alignment 6	A4A	A4	Type I Conc. Ditch	16	-	16	1.72	0.89	0.80		1.37
	B6	B4	Conc. Ditch	17	-	17	1.7	1.04	0.91		1.54
	B4	A7	Conc. Ditch	17	1.48	18.48	1.65	2.12	1.84		3.04
Alignment 7	B5	B4	Conc. Ditch	15	-	15	1.8	0.69	0.60		1.08
Alignment 8	B2	B1	Existing Culvert/Type 3	20	-	20	1.5	2.35	2.04		3.07
	B1	D1	Type 3 Ditch	10	22.29	22.29	1.4	8.10	6.07	2.72	11.21
	D1	D2	Existing Modified Culvert	-	-	-	-	-	-	-	11.21
	D2	D3	Existing Culverts	-	-	-	-	-	-	-	43.94
	D3	D4	Existing/New Culvert	30	-	30	1.1	16.69	10.51	-	55.50

Definitions:

- T_{ca} Time of concentration to develop sub-area (includes initial lag time), Figure III (from ref. 2) pg. 23 of 23 and reference 4
- T_{ta} Travel time through sub-area, see Table 3
- T_c Time of concentration
- I Rainfall intensity, from Figures 1 and 1-A (ref. 2) pgs 21 and 22 of 23
- A Catchment area
- CA Weighted runoff coefficient * catchment area
- Q_T Total design flow

(1) See pg. 11 and 12 of 23 for alignment designations.
(2) See pg. 10 of 23 for drainage area node/concentration point locations.
(3) See respective alignment profile for complete component information.
(4) See pg.10 of 23 for catchment areas.
(5) See Table 2 for runoff coefficient information.
(6) See Table 3 for Design flow and component capacity.

Equations:

Tc = $0.0078L^{0.77}S^{-0.385}$, see ref. 2 and Figure III pg. 23 of 23
where: L = length of channel/ditch from headwater to outlet, ft
S = average watershed slope, ft/ft

Q = CIA Rational Method

Table 2 - Runoff Coefficient

Sub-Area	Total Area	Area	Impervious		Pervious		Cimp	Cp	Cwt	C*A
	ft^2	Acres	ft^2	Acres	ft^2	Acres				
Alignment #1										
A2 to LS										
B	70964	1.63	35482	0.81	35482	0.81	0.9	0.3	0.6	0.98
D	48611	1.12	36458.25	0.84	12152.75	0.28	0.9	0.3	0.75	0.84
	119575	**2.75**	**71940.25**	**1.65**	**47634.75**	**1.09**				**1.81**
Alignment #2										
C5 to C4										
C	31818	0.73	23863.5	0.55	7954.5	0.18	0.9	0.3	0.75	0.55
E	73822	1.69	66439.8	1.53	7382.2	0.17	0.9	0.3	0.84	1.42
	105640	**2.43**	**90303.3**	**2.07**	**15336.7**	**0.35**				**1.97**
C4 to C3										
C	31818	0.73	23863.5	0.55	7954.5	0.18	0.9	0.3	0.75	0.55
E	73822	1.69	66439.8	1.53	7382.2	0.17	0.9	0.3	0.84	1.42
H	59687	1.37	59687	1.37	0	0.00	0.9	0.3	0.9	1.23
	165327	**3.80**	**149990.3**	**3.44**	**15336.7**	**0.35**				**3.20**
C3 to C2										
C	31818	0.73	23863.5	0.55	7954.5	0.18	0.9	0.3	0.75	0.55
E	73822	1.69	66439.8	1.53	7382.2	0.17	0.9	0.3	0.84	1.42
H	59687	1.37	59687	1.37	0	0.00	0.9	0.3	0.9	1.23
I	31514	0.72	6302.8	0.14	25211.2	0.58	0.9	0.3	0.42	0.30
	196841	**4.52**	**156293.1**	**3.59**	**40547.9**	**0.93**				**3.51**
C2 to C1										
C	31818	0.73	23863.5	0.55	7954.5	0.18	0.9	0.3	0.75	0.55
E	73822	1.69	66439.8	1.53	7382.2	0.17	0.9	0.3	0.84	1.42
H	59687	1.37	59687	1.37	0	0.00	0.9	0.3	0.9	1.23
I	31514	0.72	6302.8	0.14	25211.2	0.58	0.9	0.3	0.42	0.30
P	34664	0.80	8666	0.20	25998	0.60	0.9	0.3	0.45	0.36
	231505	**5.31**	**164959.1**	**3.79**	**66545.9**	**1.53**				**3.87**
C1 to B1										
	231505	**5.31**	**164959.1**	**3.79**	**66545.9**	**1.53**				**3.87**
Alignment #3										
C6 to C5										
C	31818	0.73	23863.5	0.55	7954.5	0.18	0.9	0.3	0.75	0.55

4/20

Table 2 - Runoff Coefficient

Sub-Area	Total Area ft²	Area Acres	Impervious ft²	Impervious Acres	Pervious ft²	Pervious Acres	Cimp	Cp	Cwt	C*A
Alignment #4										
A1toA2										
G	22102	0.51	22102	0.51	0	0.00	0.9	0.3	0.9	0.46
A2 to A4										
G	22102	0.51	22102	0.51	0	0.00	0.9	0.3	0.9	0.46
F1A	33280	0.76	24960	0.57	8320	0.19	0.9	0.3	0.75	0.57
F1B	25423	0.58	19067.25	0.44	6355.75	0.15	0.9	0.3	0.75	0.44
	80805	**1.86**	**66129.25**	**1.52**	**14675.75**	**0.34**				**1.47**
A4 to A5										
G	22102	0.51	22102	0.51	0	0.00	0.9	0.3	0.9	0.46
F1A	33280	0.76	24960	0.57	8320	0.19	0.9	0.3	0.75	0.57
F1B	25423	0.58	19067.25	0.44	6355.75	0.15	0.9	0.3	0.75	0.44
K	38590	0.89	38590	0.89	0	0.00	0.9	0.3	0.9	0.80
F2	37122	0.85	27841.5	0.64	9280.5	0.21	0.9	0.3	0.75	0.64
	156517	**3.59**	**132560.75**	**3.04**	**23956.25**	**0.55**				**2.90**
A5 to A6										
G	22102	0.51	22102	0.51	0	0.00	0.9	0.3	0.9	0.46
F1A	33280	0.76	24960	0.57	8320	0.19	0.9	0.3	0.75	0.57
F1B	25423	0.58	19067.25	0.44	6355.75	0.15	0.9	0.3	0.75	0.44
K	38590	0.89	38590	0.89	0	0.00	0.9	0.3	0.9	0.80
F2	37122	0.85	27841.5	0.64	9280.5	0.21	0.9	0.3	0.75	0.64
A	176488	4.05	88244	2.03	88244	2.03	0.9	0.3	0.6	2.43
L1	18953	0.44	14214.75	0.33	4738.25	0.11	0.9	0.3	0.75	0.33
	351958	**8.08**	**235019.5**	**5.40**	**116938.5**	**2.68**				**5.66**
A7 to A8										
G	22102	0.51	22102	0.51	0	0.00	0.9	0.3	0.9	0.46
F1A	33280	0.76	24960	0.57	8320	0.19	0.9	0.3	0.75	0.57
F1B	25423	0.58	19067.25	0.44	6355.75	0.15	0.9	0.3	0.75	0.44
K	38590	0.89	38590	0.89	0	0.00	0.9	0.3	0.9	0.80
F2	37122	0.85	27841.5	0.64	9280.5	0.21	0.9	0.3	0.75	0.64
A	176488	4.05	88244	2.03	88244	2.03	0.9	0.3	0.6	2.43
L1	18953	0.44	14214.75	0.33	4738.25	0.11	0.9	0.3	0.75	0.33
L2	26232	0.60	19674	0.45	6558	0.15	0.9	0.3	0.75	0.45
N	29956	0.69	28458.2	0.65	1497.8	0.03	0.9	0.3	0.87	0.60
M	45327	1.04	43060.65	0.99	2266.35	0.05	0.9	0.3	0.87	0.91
T	16985	0.39	16135.75	0.37	849.25	0.02	0.9	0.3	0.87	0.34
	470458	**10.80**	**342348.1**	**7.86**	**128109.9**	**2.94**				**7.96**

Table 2 - Runoff Coefficient

Sub-Area	Total Area ft²	Area Acres	Impervious ft²	Impervious Acres	Pervious ft²	Pervious Acres	Cimp	Cp	Cwt	C*A
Alignment #4 (continued)										
A8 to A9										
G	22102	0.51	22102	0.51	0	0.00	0.9	0.3	0.9	0.46
F1A	33280	0.76	24960	0.57	8320	0.19	0.9	0.3	0.75	0.57
F1B	25423	0.58	19067.25	0.44	6355.75	0.15	0.9	0.3	0.75	0.44
K	38590	0.89	38590	0.89	0	0.00	0.9	0.3	0.9	0.80
F2	37122	0.85	27841.5	0.64	9280.5	0.21	0.9	0.3	0.75	0.64
A	176488	4.05	88244	2.03	88244	2.03	0.9	0.3	0.6	2.43
L1	18953	0.44	14214.75	0.33	4738.25	0.11	0.9	0.3	0.75	0.33
R	117263	2.69	11726.3	0.27	105536.7	2.42	0.9	0.3	0.36	0.97
L2	26232	0.60	19674	0.45	6558	0.15	0.9	0.3	0.75	0.45
N	29956	0.69	28458.2	0.65	1497.8	0.03	0.9	0.3	0.87	0.60
M	45327	1.04	43060.65	0.99	2266.35	0.05	0.9	0.3	0.87	0.91
T	16985	0.39	16135.75	0.37	849.25	0.02	0.9	0.3	0.87	0.34
	587721	**13.49**	**354074.4**	**8.13**	**233646.6**	**5.36**				**8.92**
A9 to A10										
G	22102	0.51	22102	0.51	0	0.00	0.9	0.3	0.9	0.46
F1A	33280	0.76	24960	0.57	8320	0.19	0.9	0.3	0.75	0.57
F1B	25423	0.58	19067.25	0.44	6355.75	0.15	0.9	0.3	0.75	0.44
K	38590	0.89	38590	0.89	0	0.00	0.9	0.3	0.9	0.80
F2	37122	0.85	27841.5	0.64	9280.5	0.21	0.9	0.3	0.75	0.64
A	176488	4.05	88244	2.03	88244	2.03	0.9	0.3	0.6	2.43
L1	18953	0.44	14214.75	0.33	4738.25	0.11	0.9	0.3	0.75	0.33
R	117263	2.69	11726.3	0.27	105536.7	2.42	0.9	0.3	0.36	0.97
L2	26232	0.60	19674	0.45	6558	0.15	0.9	0.3	0.75	0.45
N	29956	0.69	28458.2	0.65	1497.8	0.03	0.9	0.3	0.87	0.60
M	45327	1.04	43060.65	0.99	2266.35	0.05	0.9	0.3	0.87	0.91
T	16985	0.39	16135.75	0.37	849.25	0.02	0.9	0.3	0.87	0.34
S	89291	2.05	26787.3	0.61	62503.7	1.43	0.9	0.3	0.48	0.98
	677012	**15.54**	**380861.7**	**8.74**	**296150.3**	**6.80**				**9.91**
A10 to D2										
North end of INTEC	2613600	60.00	871112.88	20.00	1742487.12	40.00	0.9	0.3	0.49998	30.00
Alignment #5										
C7 to C4A										
H1	30000	0.69	30000	0.69	0	0.00	0.9	0.3	0.9	0.62
	30000	**0.69**	**30000**	**0.69**	**0**	**0.00**				**0.62**

6/26

Table 2 - Runoff Coefficient

Sub-Area	Total Area ft²	Area Acres	Impervious ft²	Impervious Acres	Pervious ft²	Pervious Acres	Cimp	Cp	Cwt	C*A
Alignment #6										
A4A to A4										
K	38590	0.89	38590	0.89	0	0.00	0.9	0.3	0.9	0.80
B6 to B4										
M	45327	1.04	43060.65	0.99	2266.35	0.05	0.9	0.3	0.87	0.91
	45327	**1.04**	**43060.65**	**0.99**	**2266.35**	**0.05**				**0.91**
B4 to A7										
N	29956	0.69	28458.2	0.65	1497.8	0.03	0.9	0.3	0.87	0.60
M	45327	1.04	43060.65	0.99	2266.35	0.05	0.9	0.3	0.87	0.91
T	16985	0.39	16135.75	0.37	849.25	0.02	0.9	0.3	0.87	0.34
	92268	**2.12**	**87654.6**	**2.01**	**4613.4**	**0.11**				**1.84**
Alignment #7										
B5 to B4										
N	29956	0.69	28458.2	0.65	1497.8	0.03	0.9	0.3	0.87	0.60
Alignment #8										
B2 to B1										
O	30993	0.71	29443.35	0.68	1549.65	0.04	0.9	0.3	0.87	0.62
Q	71328	1.64	67761.6	1.56	3566.4	0.08	0.9	0.3	0.87	1.42
	102321	**2.35**	**97204.95**	**2.23**	**5116.05**	**0.12**				**2.04**
B1 to D1										
O	30993	0.71	29443.35	0.68	1549.65	0.04	0.9	0.3	0.87	0.62
Q	71328	1.64	67761.6	1.56	3566.4	0.08	0.9	0.3	0.87	1.42
U	18933	0.43	1893.3	0.04	17039.7	0.39	0.9	0.3	0.36	0.16
C	31818	0.73	23863.5	0.55	7954.5	0.18	0.9	0.3	0.75	0.55
E	73822	1.69	66439.8	1.53	7382.2	0.17	0.9	0.3	0.84	1.42
H	59687	1.37	59687	1.37	0	0.00	0.9	0.3	0.9	1.23
I	31514	0.72	6302.8	0.14	25211.2	0.58	0.9	0.3	0.42	0.30
P	34664	0.80	8666	0.20	25998	0.60	0.9	0.3	0.45	0.36
	352759	**8.10**	**264057.35**	**6.06**	**88701.65**	**2.04**				**6.07**
D1 to D2										
O	30993	0.71	29443.35	0.68	1549.65	0.04	0.9	0.3	0.87	0.62
Q	71328	1.64	67761.6	1.56	3566.4	0.08	0.9	0.3	0.87	1.42
U	18933	0.43	1893.3	0.04	17039.7	0.39	0.9	0.3	0.36	0.16
C	31818	0.73	23863.5	0.55	7954.5	0.18	0.9	0.3	0.75	0.55
E	73822	1.69	66439.8	1.53	7382.2	0.17	0.9	0.3	0.84	1.42
H	59687	1.37	59687	1.37	0	0.00	0.9	0.3	0.9	1.23
I	31514	0.72	6302.8	0.14	25211.2	0.58	0.9	0.3	0.42	0.30
P	34664	0.80	8666	0.20	25998	0.60	0.9	0.3	0.45	0.36
	352759	**8.10**	**264057.35**	**6.06**	**88701.65**	**2.04**				**6.07**
D3 to D4										
V	726802	16.69	399741.1	9.18	327060.9	7.51	0.9	0.3	0.63	10.51

Table 3 - Profile Data

Feature	Beg Station	End Station	Beg Invert Elevation	End Invert Elevation	Length (ft)	Delta Elevation	Slope (%)	Design Flow (cfs)	Capacity (cfs)	Velocity (ft/sec)	Travel Time (min)	Headwall Water Depth (in)[1]
Profile 1												
12" PVC Pipe	0+00.00	0+51.93	4909.4	4908.5	51.93	0.9	1.73	2.72	6.77			-
8" Trench Drain	0+51.93	2+41.13	4913.4	4911.69	189.2	1.71	0.90	2.72	10			-
Profile 2												
Type 3 Ditch	3+65.97	5+02.02	4912.6	4912.33	136.05	0.27	0.20	5.88	30.29	4.49	0.51	-
28"x20" CMPA	5+02.02	5+33.02	4912.33	4912.24	31	0.09	0.29	5.88	6.6	2.1	0.25	13.44
Type 3 Ditch	5+33.02	7+19.20	4912.24	4911.68	186.18	0.56	0.30	7.59	37.09	5.5	0.56	-
28"x20" CMPA	7+19.20	7+43.20	4911.68	4911.56	24	0.12	0.50	7.59	8.66	2.76	0.14	15.84
Type 3 Ditch	7+43.20	7+56.06	4911.56	4911.5	12.86	0.06	0.47	7.59	46.43	6.88	0.03	-
28"x20" CMPA	7+56.06	8+46.06	4911.5	4910.99	90	0.51	0.57	7.98	9.25	2.94	0.51	15.96
Type 3 Ditch	8+46.06	8+62.38	4910.99	4910.85	16.32	0.14	0.86	7.98	62.8	9.3	0.03	-
Exist 24"x30" CMPA	8+62.38	9+55.10	4910.85	4909.51	92.72	1.34	1.45	7.98	14.75	4.7	0.33	17.28
Type 3 Ditch	9+55.10	10+79.10	4909.51	4908.8	124	0.71	0.57	7.98	51.13	7.57	0.27	-
28"x20" CMPA	10+79.10	11+39.10	4908.8	4908.4	60	0.4	0.67	8.41	10.03	3.19	0.31	17.04
Type 3 Ditch	11+39.10	12+78.86	4908.4	4907.45	139.76	0.95	0.68	8.41	55.84	8.27	0.28	-
Exist 36" CMP	12+78.86	14+40.30	4907.45	4906.9	161.44	0.55	0.34	8.41	21.07	2.98	0.90	14.4
Type 3 Ditch	14+40.30	14+51.39	4906.9	4906.47	11.09	0.43	3.88	8.41	274.65	22.9	0.01	-
Profile 3												
Type 1 Ditch	0+00.00	1+35.58	4913.2	4912.93	135.58	0.27	0.20	0.93	2.5	2	1.13	-
12" CMP	1+35.58	1+84.58	4912.93	4912.6	49	0.33	0.67	0.93	1.58	2	0.41	7.2
Profile 4												
Type 1 Ditch	0+00.00	1+40.27	4916.8	4916	140.27	0.8	0.57	0.82	4.23	3.38	0.69	-
Type 1 Ditch	1+40.27	2+07.35	4916	4914	67.08	2	2.98	0.82	9.66	7.7	0.15	-
Type 1 Ditch	2+07.35	4+43.55	4914	4913.05	236.2	0.95	0.40	2.49	3.54	2.83	1.39	-
Type 2 Ditch	4+43.55	6+80.29	4913.05	4912.1	236.74	0.95	0.40	4.79	6.15	3.28	1.20	-
Type 3 Ditch	6+80.29	8+79.90	4911	4910.6	199.61	0.4	0.20	9.00	30.29	4.49	0.74	-
24" CMP	8+79.90	9+01.90	4910.6	4910.4	22	0.2	0.91	9.00	11.69	3.72	0.10	18.72
Type 3 Ditch	9+01.90	10+20.85	4910.4	4910.14	118.95	0.26	0.22	9.00	31.76	4.71	0.42	-
24" CMP	10+20.85	10+60.85	4910.14	4909.74	40	0.4	1.00	12.09	12.25	3.9	0.17	22.56
Concrete Structure	10+60.85	10+66.26	4909.74	4909.57	5.41	0.17	3.14	13.30	182.29	20.25	0.00	-
Exist 24" CMP	10+66.26	10+86.26	4909.57	4909.36	20	0.21	1.05	13.30	12.56	4	0.08	26.4
Type 3 Ditch	10+86.26	11+78.64	4909.36	4909.17	92.38	0.19	0.21	13.87	31.03	4.6	0.33	-
30" CMP	11+78.64	12+42.64	4909.17	4908.95	64	0.22	0.34	13.87	12.95	2.64	0.40	21.96
Type 3 Ditch	12+42.64	18+97.00	4908.95	4907.51	654.36	1.44	0.22	13.87	31.76	4.7	2.32	-
Type 3 Ditch	18+97.00	19+22.55	4907.51	4907.11	25.55	0.405	1.59	13.87	85.39	12.7	0.03	-
Exist 40"x28" CMPA	19+22.55	19+90.82	4906.95	4906.26	68.27	0.69	1.01	30.00	36.31	5.14	0.22	30.84

Table 3 - Profile Data

Feature	Beg Station	End Station	Beg Invert Elevation	End Invert Elevation	Length (ft)	Delta Elevation	Slope (%)	Design Flow (cfs)	Capacity (cfs)	Velocity (ft/sec)	Travel Time (min)	Headwall Water Depth (in)[1]
Profile 5												
Type 1 Ditch	0+00.00	0+63.29	4916.3	4915.55	63.29	0.75	1.19	1.12	6.1	4.9	0.22	-
Type 1 Ditch	0+63.29	0+82.80	4915.55	4914.18	19.51	1.37	7.02	1.12	14.83	11.9	0.03	-
Exist 18" CMP	0+82.80	1+22.80	4914.18	4913.67	40	0.51	1.28	1.12	6.44	3.6	0.19	5.4
Type 3 Ditch	1+22.80	1+44.52	4913.67	4912.1	21.72	1.57	7.23	1.12	182.09	27	0.01	-
Profile 6												
Type 1 Ditch	0+00.00	2+00.64	4914.12	4913.05	200.64	1.07	0.53	1.37	4.07	3.3	1.01	-
Type 1 Ditch	2+00.64	4+46.98	4914.12	4912.07	246.34	2.05	0.83	1.54	5.1	4	1.03	-
Type 1 Ditch	4+46.98	6+54.29	4912.07	4910.67	207.31	1.4	0.68	3.04	4.61	3.7	0.93	-
18" CMP	6+54.29	7+08.29	4910.67	4910.4	54	0.27	0.50	3.04	4.02	2.3	0.39	11.16
Profile 7												
Type 1 Ditch	0+00.00	2+65.84	4912.6	4912.07	265.84	0.53	0.20	1.08	2.5	2	2.22	-
Profile 8												
Type 3 Ditch	0+00.00	0+26.50	4908	4907.29	26.5	0.71	2.68	3.07	110.86	16.42	0.03	-
Exist 42"x30" CMPA	0+26.50	1+20.38	4907.29	4906.52	93.88	0.77	0.82	3.07	32.71	4.63	0.34	9
Type 3 Ditch	1+20.38	3+24.03	4906.52	4906.11	203.65	0.41	0.20	11.21	30.29	4.49	0.76	-
52"x32" CMPA	3+24.03	3+77.09	4906.11	4905.9	53.06	0.21	0.40	11.21	39.02	3.7	0.24	13.8
Exist Manhole	3+77.09	3+85.57	4905.9	4904.76	N/A	1.14	N/A	N/A	N/A	-	-	-
Exist 52"x32" CMPA	3+85.57	4+21.72	4904.76	4904.04	36.15	0.72	1.99	43.94	87.03	8.24	0.07	N/A
Exist Manhole	4+21.72	4+30.20	4904.04	4902.04	N/A	2	N/A	N/A	N/A	-	-	-
Exist 52"x32" CMPA	4+30.20	4+67.72	4902.04	4901.89	37.52	0.15	0.40	43.94	39.02	3.7	0.17	N/A
Exist 58"x36" CMPA	4+67.72	6+98.81	4901.89	4900.83	231.09	1.06	0.46	55.50	52.77	4.2	0.92	N/A
Manhole	6+98.81	7+05.81	4900.83	4900.83	N/A	N/A	N/A	N/A	N/A	-	-	-
48" CMP	7+05.81	13+44.61	4900.83	4897.61	638.8	3.22	0.50	55.50	55.01	4.38	2.43	N/A

1.) Headwater depths were calculated using the nomographs on pages 25 and 26.

9/26

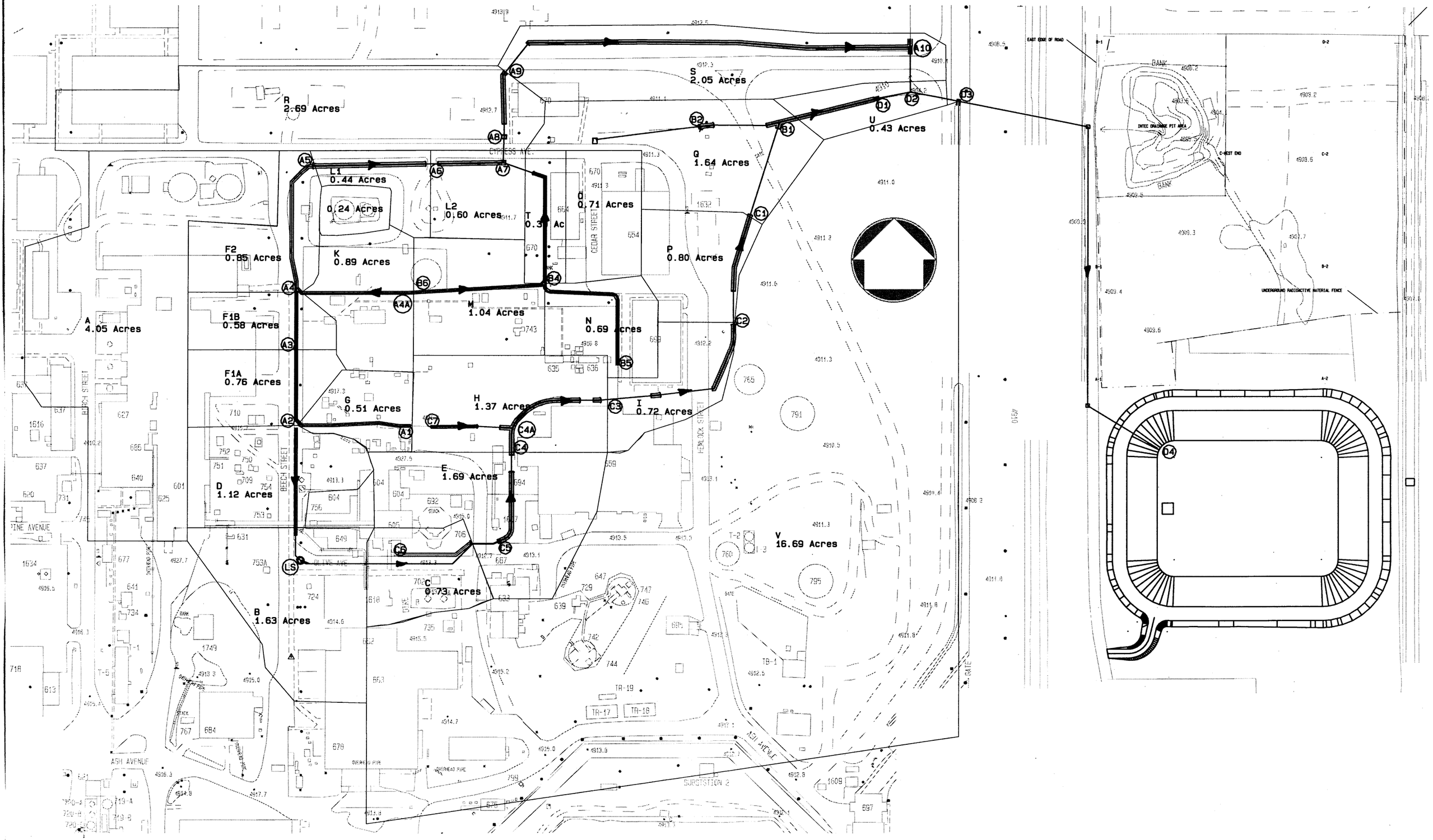
R
2.69 Acres
S
2.05 Acres
U
0.43 Acres
Q
1.64 Acres
L1
0.44 Acres
0.24 Acres
L2
0.60 Acres
T
0.3 Ac
O
0.71 Acres
F2
0.85 Acres
K
0.89 Acres
P
0.80 Acres
A
4.05 Acres
F1B
0.58 Acres
M
1.04 Acres
N
0.69 Acres
F1A
0.76 Acres
G
0.51 Acres
H
1.37 Acres
I
0.72 Acres
E
1.69 Acres
D
1.12 Acres
V
16.69 Acres
C
0.73 Acres
B
1.63 Acres
A1
A2
A3
A4
A4A
A5
A6
A7
A8
A9
A10
B1
B2
B3
B4
B5
B6
C1
C2
C3
C4
C4A
C5
C6
C7
D1
D2
D3
D4
LS
CYPRESS AVE.
CEDAR STREET
BEECH STREET
HEMLOCK STREET
PINE AVENUE
OLIVE AVE.
ASH AVENUE
EAST EDGE OF ROAD
INTEC DRAINAGE PIT AREA
C-WEST END
UNDERGROUND RADIOACTIVE MATERIAL FENCE
SUBSTATION 2
GATE

11/26

REVISIONS		
REV	DESCRIPTION	EFFECTIVE DATE:

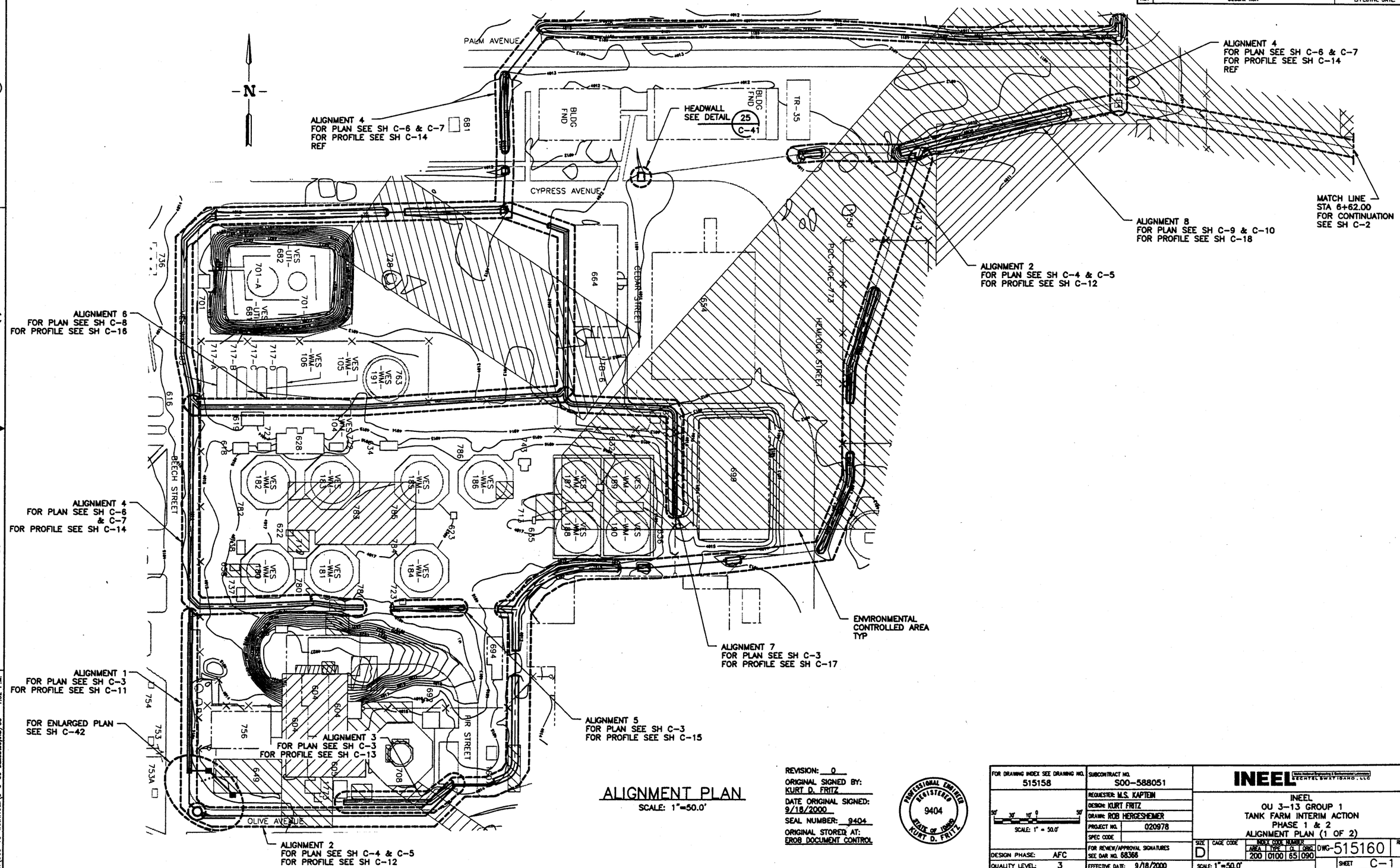

ALIGNMENT PLAN

SCALE: 1"=50.0'

REVISION: 0
ORIGINAL SIGNED BY: KURT D. FRITZ
DATE ORIGINAL SIGNED: 9/18/2000
SEAL NUMBER: 9404
ORIGINAL STORED AT: EROB DOCUMENT CONTROL

PROFESSIONAL ENGINEER REGISTERED 9404 STATE OF IDAHO KURT D. FRITZ

FOR DRAWING INDEX SEE DRAWING NO. 515158	SUBCONTRACT NO. S00-588051	INEEL (Idaho National Engineering & Environmental Laboratory) BECHTEL BWXT IDAHO, LLC	
50' 30' 10' 0 50' SCALE: 1" = 50.0'	REQUESTER: M.S. KAPTEIN	INEEL OU 3-13 GROUP 1 TANK FARM INTERIM ACTION PHASE 1 & 2 ALIGNMENT PLAN (1 OF 2)	
	DESIGN: KURT FRITZ		
	DRAWN: ROB HERGESHEIMER		
	PROJECT NO. 020978		
	SPEC CODE		
DESIGN PHASE: AFC	FOR REVIEW/APPROVAL SIGNATURES SEE DAR NO. 68366	SIZE D / CAGE CODE / INDEX CODE NUMBER AREA 200 TYPE 0100 CL 65 ORG 090	DWG-515160 REV
QUALITY LEVEL: 3	EFFECTIVE DATE: 9/18/2000	SCALE: 1"=50.0'	SHEET C-1

File: C-1.dwg Path: G:\OU3-13-TANKFARM\9-6-00 ID: RDH5 Layout Name: D Size Default 09/06/00 - 1:52 P.M.

12/26

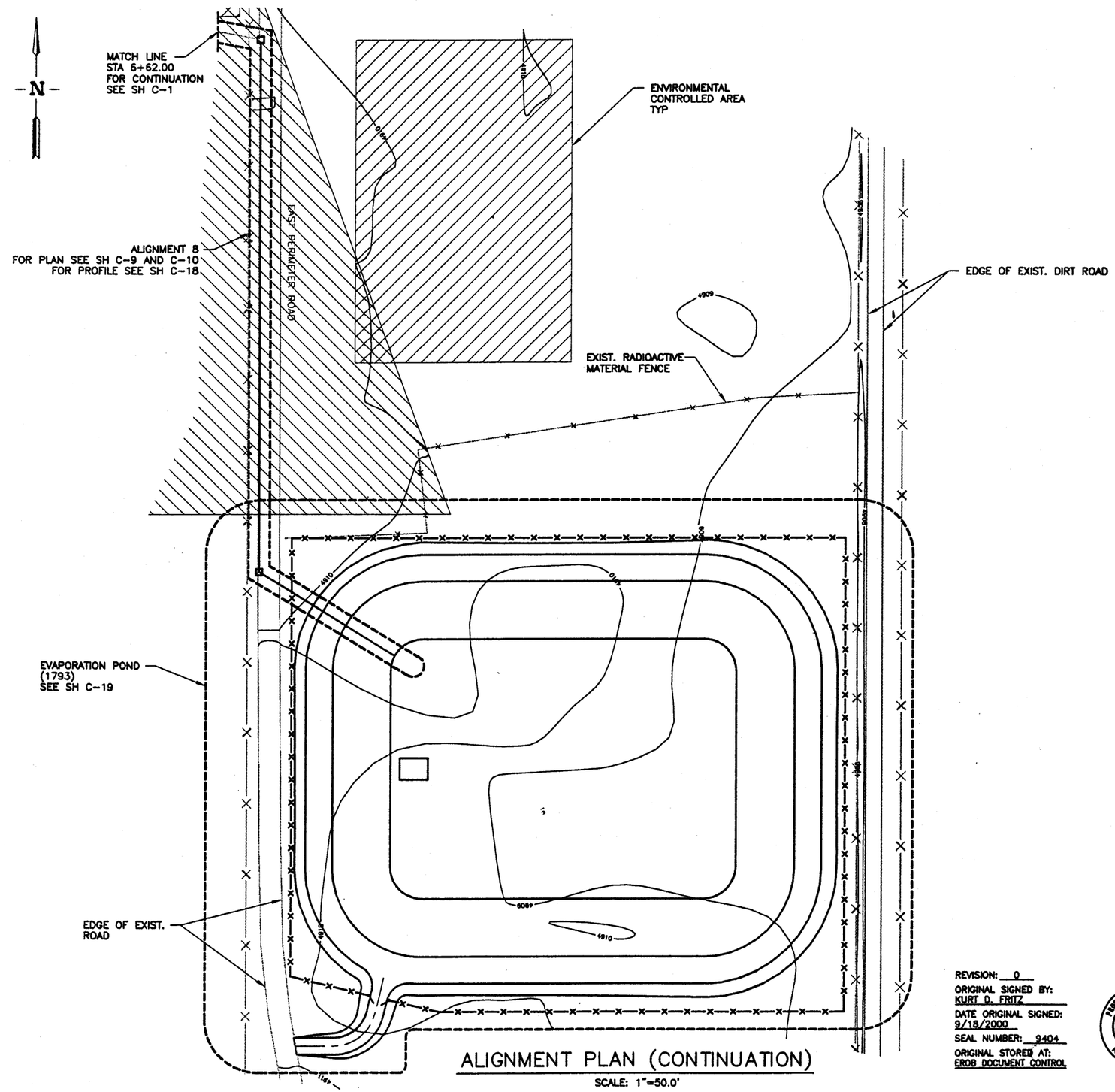

ALIGNMENT PLAN (CONTINUATION)

SCALE: 1"=50.0'

REVISION: 0
ORIGINAL SIGNED BY: KURT D. FRITZ
DATE ORIGINAL SIGNED: 9/18/2000
SEAL NUMBER: 9404
ORIGINAL STORED AT: EROB DOCUMENT CONTROL

PROFESSIONAL ENGINEER REGISTERED 9404 STATE OF IDAHO KURT D. FRITZ

FOR DRAWING INDEX SEE DRAWING NO. 515158	SUBCONTRACT NO. S00-588051	INEEL
SCALE: 1" = 50.0'	REQUESTER: M.S. KAPTEIN	INEEL OU 3-13 GROUP 1 TANK FARM INTERIM ACTION PHASE 1 & 2 ALIGNMENT PLAN (2 OF 2)
	DESIGN: KURT FRITZ	
	DRAWN: ROB HERGESHEIMER	
	PROJECT NO. 020978	
	SPEC CODE	
DESIGN PHASE: AFC	FOR REVIEW/APPROVAL SIGNATURES SEE DAR NO. 68366	SIZE D; CAGE CODE; INDEX CODE NUMBER: AREA 200, TYPE 0100, CL 65, ORIG 090; DWG-515161; REV
QUALITY LEVEL: 3	EFFECTIVE DATE: 9/18/2000	SCALE: 1"=50.0'; SHEET C-2

REVISIONS

REV	DESCRIPTION	EFFECTIVE DATE:

File: C-2.DWG ID: RDH5 Layout Name: D Size
Path: G:\OU3-13-TANKFARM\9-6-00 Baseline\9/18/00 - 1:55 P.M.

13/20

36

REVISIONS		
REV	DESCRIPTION	EFFECTIVE DATE:

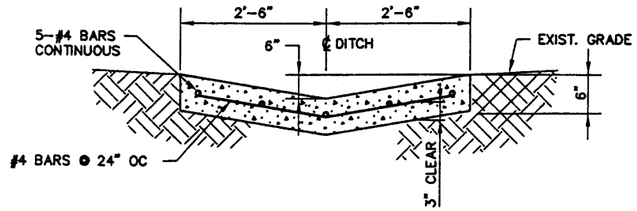

TYP CONCRETE DITCH DETAIL (11 / C-3)

TYPE 1
NTS

REF C-6 C-8

NOTES

1. PROVIDE IMPRESSED CONTRACTION JOINTS AT 5'-0" OC MAXIMUM.
2. PROVIDE EXPANSION JOINTS AT 40'-0" OC MAXIMUM. SEE TYP DETAIL THIS SHEET.

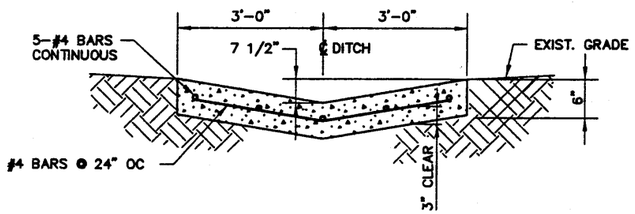

TYP CONCRETE DITCH DETAIL (12 / C-6)

TYPE 2
NTS

NOTES

1. PROVIDE IMPRESSED CONTRACTION JOINTS AT 5'-0" OC MAXIMUM.
2. PROVIDE EXPANSION JOINTS AT 40'-0" OC MAXIMUM. SEE TYP DETAIL THIS SHEET.

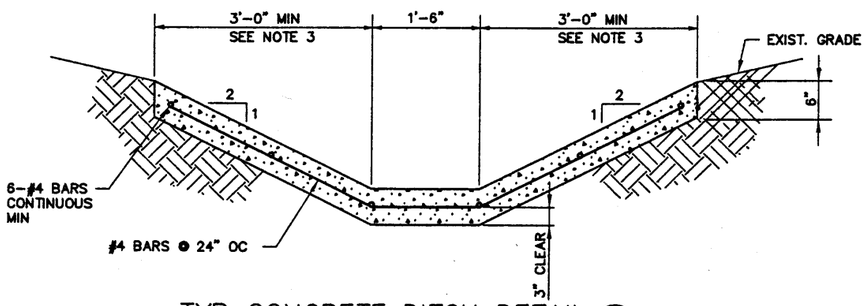

TYP CONCRETE DITCH DETAIL (13 / C-3)

TYPE 3
NTS

REF C-4 C-5 C-6 C-7 C-9

NOTES

1. PROVIDE IMPRESSED CONTRACTION JOINTS AT 5'-0" OC MAXIMUM.
2. PROVIDE EXPANSION JOINTS AT 40'-0" OC MAXIMUM. SEE TYP DETAIL THIS SHEET.
3. CONCRETE DITCH SHALL EXTEND TO THE TOP OF EXIST.ING DITCH BANK.

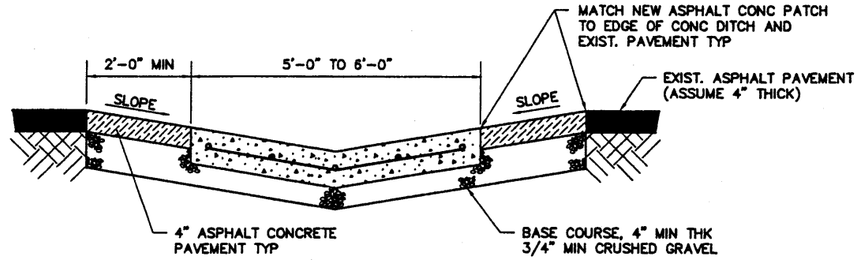

TYP CONCRETE DITCH THROUGH PAVEMENT DETAIL (14 / C-6)

NTS

NOTES

1. ALL AREAS TO BE PATCHED SHALL HAVE THE EXIST.ING PAVEMENT SAW CUT TO CLEAN STRAIGHT LINES.
2. EDGES OF EXIST.ING PAVEMENT AND NEW CONCRETE SHALL HAVE A TACK COAT APPLIED PRIOR TO THE PLACEMENT OF NEW ASPHALT CONCRETE.

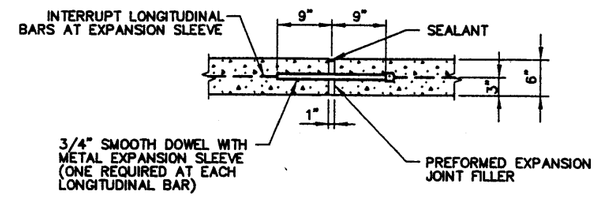

TYP EXPANSION JOINT DETAIL

NTS

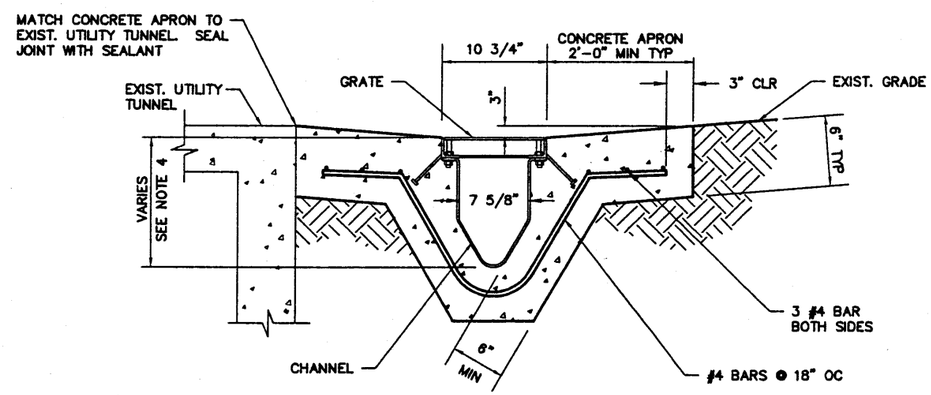

TYP 8" TRENCH DRAIN SECTION (A / C-3)

NTS

NOTES

1. PROVIDE IMPRESSED CONTRACTION JOINTS AT 5'-0" OC MAXIMUM.
2. PROVIDE EXPANSION JOINTS AT 50'-0" OC MAXIMUM.
3. INSTALL PER MANUFACTURERS RECOMMENDATIONS.
4. DEPTH VARIES FROM 5 1/2" TO 29 1/2". SEE MANUFACTURERS DATA.

REVISION: 0
ORIGINAL SIGNED BY: KURT D. FRITZ
DATE ORIGINAL SIGNED: 9/18/2000
SEAL NUMBER: 9404
ORIGINAL STORED AT: EROB DOCUMENT CONTROL

PROFESSIONAL ENGINEER REGISTERED 9404 STATE OF IDAHO KURT D. FRITZ

FOR DRAWING INDEX SEE DRAWING NO. 515158	SUBCONTRACT NO. S00-588051	INEEL	
NO SCALE	REQUESTER: M.S. KAPTEIN DESIGN: KURT FRITZ DRAWN: ROB HERGESHEIMER PROJECT NO. 020978 SPEC CODE	INEEL OU 3-13 GROUP 1 TANK FARM INTERIM ACTION PHASE 1 & 2 DITCH DETAILS AND SECTIONS	
DESIGN PHASE: AFC	FOR REVIEW/APPROVAL SIGNATURES SEE DAR NO. 68366	SIZE D / CAGE CODE / INDEX CODE NUMBER AREA 200 TYPE 0100 CL 62 ORIG 090	DWG-515192 REV
QUALITY LEVEL: 3	EFFECTIVE DATE: 9/18/2000	SCALE: NONE	SHEET C-33

File: C-33.DWG ID: RDH5 Drawn in Model Space
Path: G:\OU3-13-TANKFARM\9-6-00 Default 09/06/00 - 4:41 P.M.

REVISIONS		
REV	DESCRIPTION	EFFECTIVE DATE:

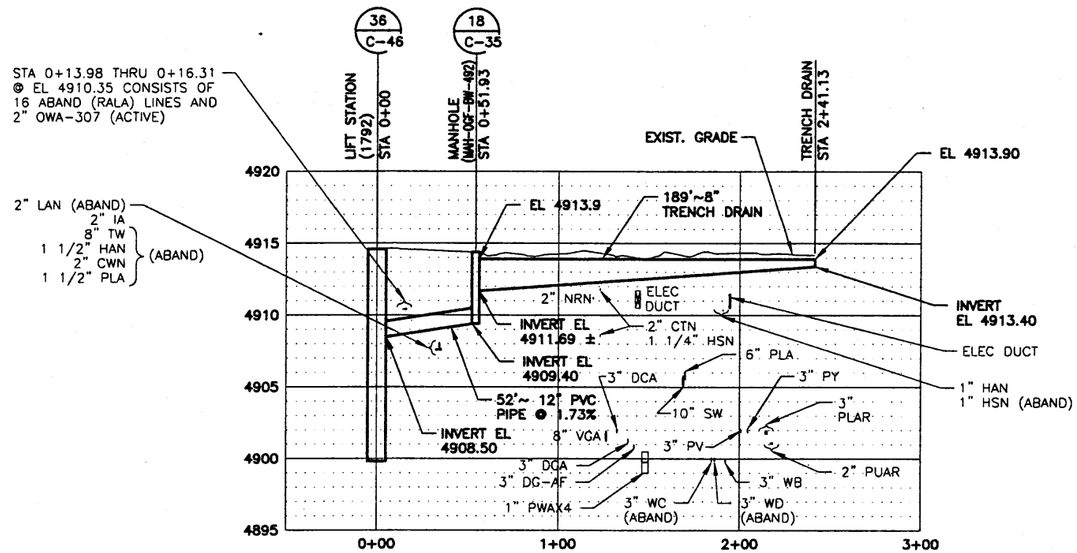

ALIGNMENT 1 PROFILE

SCALE: HOR 1"=40'
VER 1"=5'

REF
C-1
C-3

NOTES

1. ELEVATIONS AND LOCATIONS OF ELECTRICAL DUCT BANKS AND PIPES SHOWN SHADED ARE APPROXIMATE ELEVATIONS AND LOCATIONS ONLY.
2. HORIZONTAL COORDINATES ARE INTEC SITE SPECIFIC. VERTICAL DATUM IS NRTS (0.35' HIGHER THAN INTEC VERTICAL DATUM).

REVISION: 0
ORIGINAL SIGNED BY: KURT D. FRITZ
DATE ORIGINAL SIGNED: 9/18/2000
SEAL NUMBER: 9404
ORIGINAL STORED AT: EROB DOCUMENT CONTROL

PROFESSIONAL ENGINEER REGISTERED 9404 STATE OF IDAHO KURT D. FRITZ

FOR DRAWING INDEX SEE DRAWING NO. 515158	SUBCONTRACT NO. S00-588051	INEEL BECHTEL BWXT IDAHO, LLC
HORIZONTAL 1"=40' VERTICAL 1"=5'	REQUESTER: M.S. KAPTEIN DESIGN: KURT FRITZ DRAWN: ROB HERGESHEIMER PROJECT NO. 020978 SPEC CODE	INEEL OU 3-13 GROUP 1 TANK FARM INTERIM ACTION PHASE 1 & 2 ALIGNMENT 1 PROFILE
DESIGN PHASE: AFC	FOR REVIEW/APPROVAL SIGNATURES SEE DAR NO. 68366	SIZE D; CAGE CODE; INDEX CODE NUMBER AREA 200 TYPE 0100 Q 02 DRG 090; DWG-515170; REV
QUALITY LEVEL: 3	EFFECTIVE DATE: 9/18/2000	SCALE: NOTED; SHEET C-11

15/26

REVISIONS		
REV	DESCRIPTION	EFFECTIVE DATE:

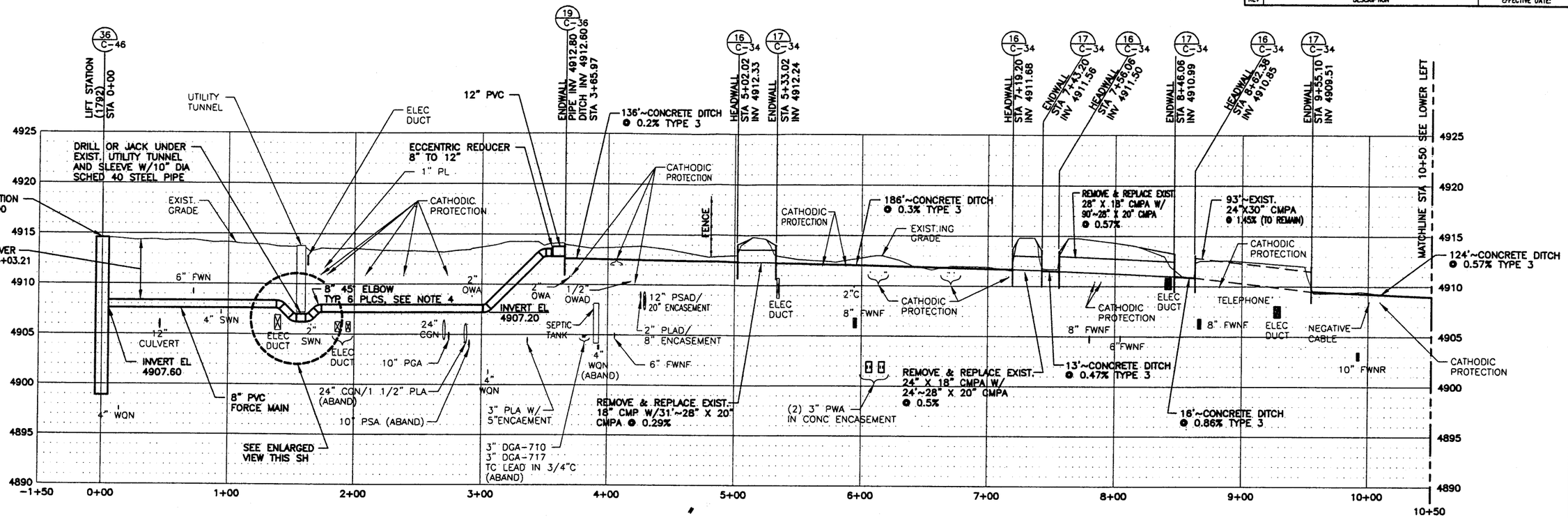

ALIGNMENT 2 PROFILE

SCALE: HOR 1"=40'
VER 1"=5'

REF
C-1
C-4
C-5

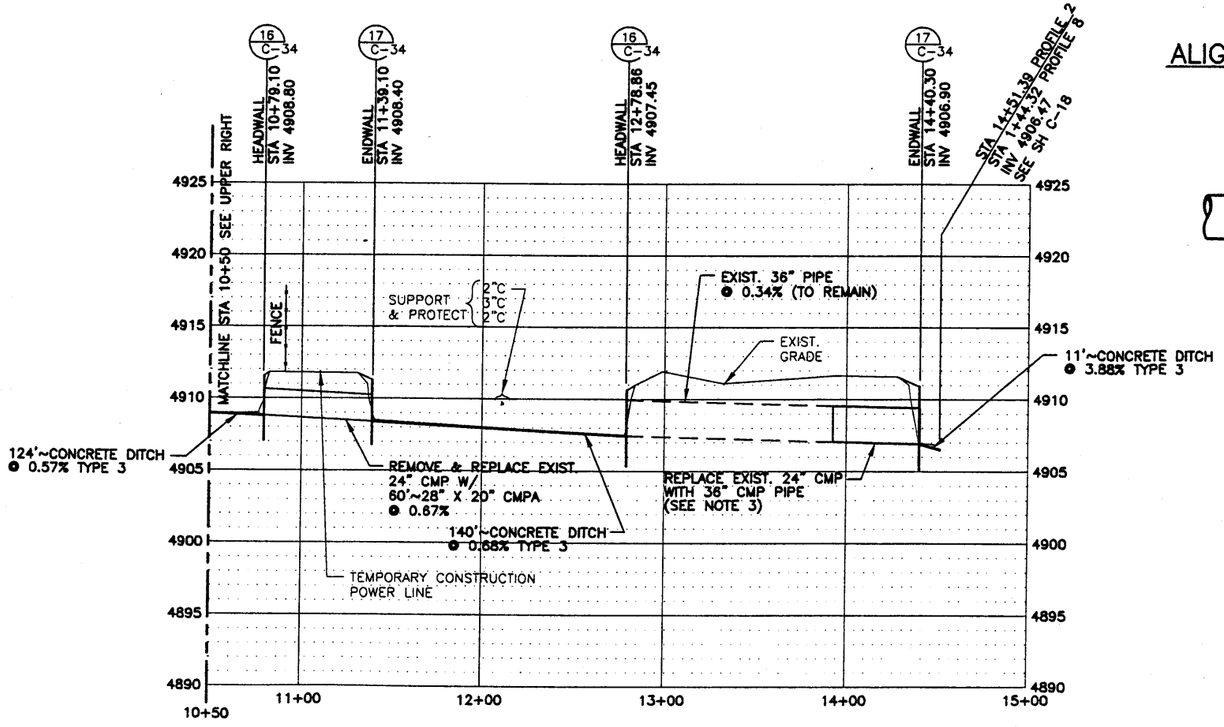

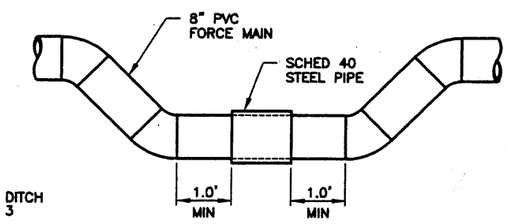

ENLARGED VIEW

NTS
SEE NOTE 4

NOTES

1. ELEVATIONS AND LOCATIONS OF ELECTRICAL DUCT BANKS AND PIPES SHOWN SHADED ARE APPROXIMATE ELEVATIONS AND LOCATIONS ONLY.
2. HORIZONTAL COORDINATES ARE INTEC SITE SPECIFIC. VERTICAL DATUM IS NRTS (0.35' HIGHER THAN INTEC VERTICAL DATUM).
3. FIELD SURVEY INDICATES NORTH END OF CULVERT IS 24" DIAMETER. FIELD VERIFY BEGINNING OF 24" DIAMETER PIPE, REMOVE AND REPLACE WITH NEW 36" DIAMETER CMP.
4. MECHANICAL JOINT RESTRAINTS ARE REQUIRED AT ALL BENDS AND AT JOINTS WITHIN 5 FEET OF BENDS.

REVISION: 0
ORIGINAL SIGNED BY: KURT D. FRITZ
DATE ORIGINAL SIGNED: 9/18/2000
SEAL NUMBER: 9404
ORIGINAL STORED AT: EROB DOCUMENT CONTROL

PROFESSIONAL ENGINEER REGISTERED 9404 STATE OF IDAHO KURT D. FRITZ

FOR DRAWING INDEX SEE DRAWING NO. 515158	SUBCONTRACT NO. S00-588051	INEEL (Idaho National Engineering & Environmental Laboratory) BECHTEL BWXT IDAHO, LLC
HORIZONTAL 1"=40' VERTICAL 1"=5'	REQUESTER: M.S. KAPTEIN	INEEL OU 3-13 GROUP 1 TANK FARM INTERIM ACTION PHASE 1 & 2 ALIGNMENT 2 PROFILE
	DESIGN: KURT FRITZ	
	DRAWN: ROB HERGESHEIMER	
	PROJECT NO. 020978	
	SPEC CODE	
DESIGN PHASE: AFC	FOR REVIEW/APPROVAL SIGNATURES SEE DAR NO. 68368	SIZE D; CAGE CODE; INDEX CODE NUMBER AREA 200 TYPE 0100 CL 02 ORG 090; DWG- 515171; REV
QUALITY LEVEL: 3	EFFECTIVE DATE: 9/18/2000	SCALE: NOTED; SHEET C-12

File: C-12.DWG ID: RDH5 Drawn In Model Space
Path: G:\OU3-13-TANKFARM\8-6-00 Bellsouth\09/06/00 - 4:10 P.M.

REVISIONS		
REV	DESCRIPTION	EFFECTIVE DATE:

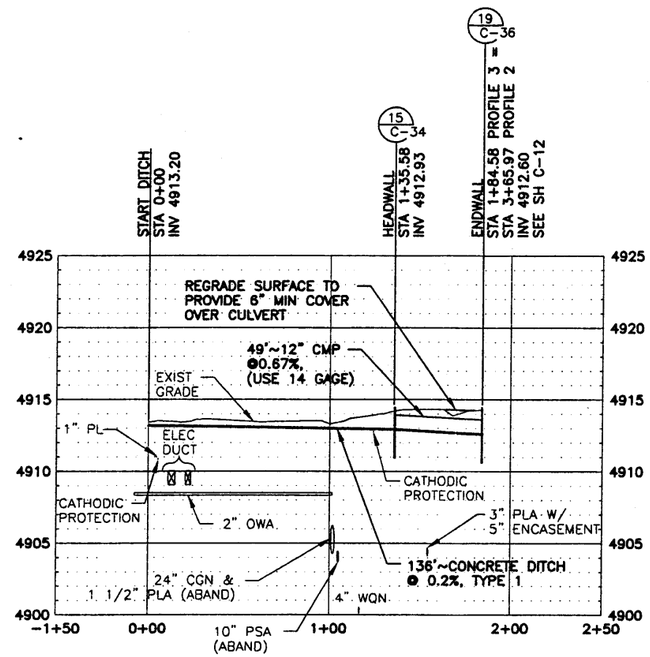

ALIGNMENT 3 PROFILE

SCALE: HOR 1"=40'
VER 1"=5'

REF
C-1
C-3

NOTES

1. ELEVATIONS AND LOCATIONS OF ELECTRICAL DUCT BANKS AND PIPES SHOWN SHADED ARE APPROXIMATE ELEVATIONS AND LOCATIONS ONLY.
2. HORIZONTAL COORDINATES ARE INTEC SITE SPECIFIC. VERTICAL DATUM IS NRTS (0.35' HIGHER THAN INTEC VERTICAL DATUM).

REVISION: 0
ORIGINAL SIGNED BY: KURT D. FRITZ
DATE ORIGINAL SIGNED: 9/18/2000
SEAL NUMBER: 9404
ORIGINAL STORED AT: EROB DOCUMENT CONTROL

PROFESSIONAL ENGINEER REGISTERED 9404 STATE OF IDAHO KURT D. FRITZ

FOR DRAWING INDEX SEE DRAWING NO. 515158	SUBCONTRACT NO. S00-588051	INEEL Idaho National Engineering & Environmental Laboratory BECHTEL BWXT IDAHO, LLC
HORIZONTAL 1"=40' VERTICAL 1"=5'	REQUESTER: M.S. KAPTEIN DESIGN: KURT FRITZ DRAWN: ROB HERGESHEIMER PROJECT NO. 020978 SPEC CODE	INEEL OU 3-13 GROUP 1 TANK FARM INTERIM ACTION PHASE 1 & 2 ALIGNMENT 3 PROFILE
DESIGN PHASE: AFC	FOR REVIEW/APPROVAL SIGNATURES SEE DAR NO. 68366	SIZE D · CAGE CODE · INDEX CODE NUMBER: AREA 200, TYPE 0100, CL 02, ORIG 090 · DWG-515172 · REV
QUALITY LEVEL: 3	EFFECTIVE DATE: 9/18/2000	SCALE: NOTED · SHEET C-13

File: C-13.DWG ID: RDH5 Drawn in Model Space
Path: G:\OU3-13-TANKFARM\9-6-00 Defaults\9/18/00 - 3:36 P.M.

17/26

REVISIONS		
REV	DESCRIPTION	EFFECTIVE DATE:

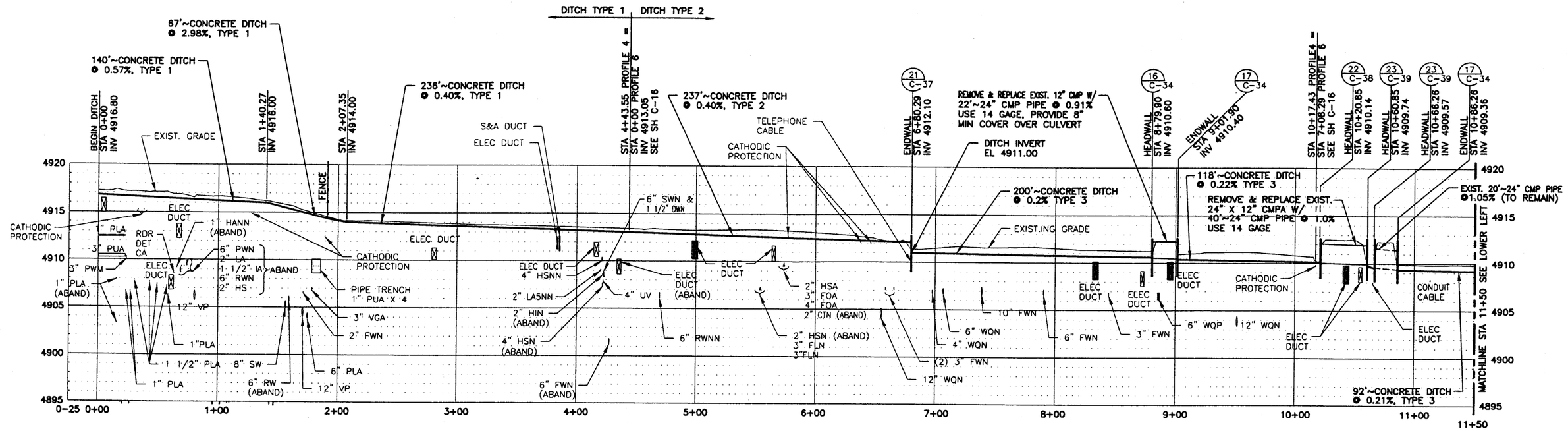

ALIGNMENT 4 PROFILE

SCALE: HOR 1"=40'
VER 1"=5'

REF
C-1
C-6
C-7
C-16

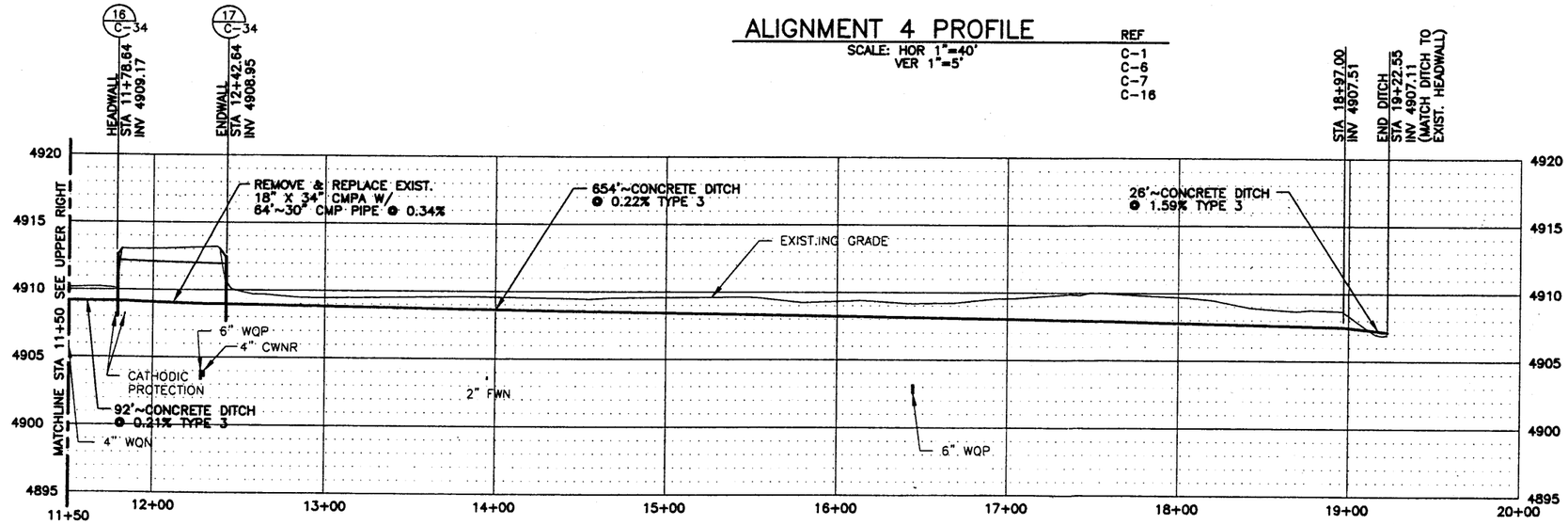

NOTES

1. ELEVATIONS AND LOCATIONS OF ELECTRICAL DUCT BANKS AND PIPES SHOWN SHADED ARE APPROXIMATE ELEVATIONS AND LOCATIONS ONLY.
2. HORIZONTAL COORDINATES ARE INTEC SITE SPECIFIC. VERTICAL DATUM IS NRTS (0.35' HIGHER THAN INTEC VERTICAL DATUM).

REVISION: 0
ORIGINAL SIGNED BY: KURT D. FRITZ
DATE ORIGINAL SIGNED: 9/18/2000
SEAL NUMBER: 9404
ORIGINAL STORED AT: EROB DOCUMENT CONTROL

PROFESSIONAL ENGINEER REGISTERED 9404 STATE OF IDAHO KURT D. FRITZ

FOR DRAWING INDEX SEE DRAWING NO. 515158	SUBCONTRACT NO. S00-588051
HORIZONTAL 1"=40' VERTICAL 1"=5'	REQUESTER: M.S. KAPTEIN
	DESIGN: KURT FRITZ
	DRAWN: ROB HERGESHEIMER
	PROJECT NO. 020978
	SPEC CODE
DESIGN PHASE: AFC	FOR REVIEW/APPROVAL SIGNATURES SEE DAR NO. 68366
QUALITY LEVEL: 3	EFFECTIVE DATE: 9/18/2000

INEEL
Idaho National Engineering & Environmental Laboratory
LOCKHEED MARTIN IDAHO, LLC

INEEL
OU 3-13 GROUP 1
TANK FARM INTERIM ACTION
PHASE 1 & 2
ALIGNMENT 4 PROFILE

SIZE	CAGE CODE	INDEX CODE NUMBER: AREA	TYPE	CL	DISC	DWG-	REV
D		200	0100	02	090	515173	

SCALE: NOTED
SHEET C-14

FNT-01-REV 3.1
File: C-14.DWG
Path: G:\OU3-13-TANKFARM\9-6-00
ID: RDHS
Drawn in Model Space
Dollau89\RHG/00 - 3:42 P.M.

18/26

REVISIONS		
REV	DESCRIPTION	EFFECTIVE DATE:

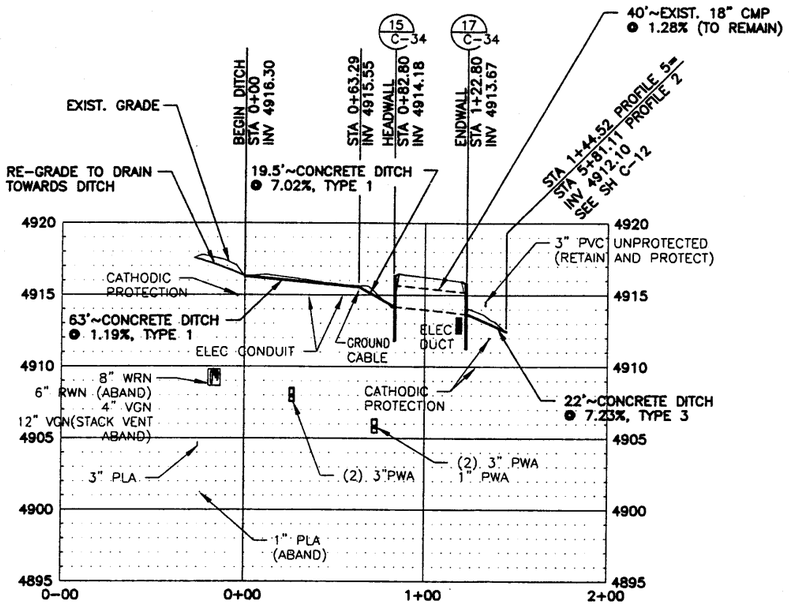

ALIGNMENT 5 PROFILE

SCALE: HOR 1"=40'
VER 1"=5'

REF
C-1
C-3

NOTES

1. ELEVATIONS AND LOCATIONS OF ELECTRICAL DUCT BANKS AND PIPES SHOWN SHADED ARE APPROXIMATE ELEVATIONS AND LOCATIONS ONLY.
2. HORIZONTAL COORDINATES ARE INTEC SITE SPECIFIC. VERTICAL DATUM IS NRTS (0.35' HIGHER THAN INTEC VERTICAL DATUM).

REVISION: 0
ORIGINAL SIGNED BY: KURT D. FRITZ
DATE ORIGINAL SIGNED: 9/18/2000
SEAL NUMBER: 9404
ORIGINAL STORED AT: EROB DOCUMENT CONTROL

PROFESSIONAL ENGINEER REGISTERED 9404 STATE OF IDAHO KURT D. FRITZ

FOR DRAWING INDEX SEE DRAWING NO. 515158	SUBCONTRACT NO. S00-588051	INEEL (Idaho National Engineering & Environmental Laboratory) BECHTEL BWXT IDAHO, LLC
HORIZONTAL 1"=40' VERTICAL 1"=5'	REQUESTER: M.S. KAPTEIN DESIGN: KURT FRITZ DRAWN: ROB HERGESHEIMER PROJECT NO. 020978 SPEC CODE	INEEL OU 3-13 GROUP 1 TANK FARM INTERIM ACTION PHASE 1 & 2 ALIGNMENT 5 PROFILE
DESIGN PHASE: AFC	FOR REVIEW/APPROVAL SIGNATURES SEE DAR NO. 68366	SIZE D; CAGE CODE; INDEX CODE NUMBER AREA 200 TYPE 0100 G 02 DBG 090; DWG-515174; REV
QUALITY LEVEL: 3	EFFECTIVE DATE: 9/18/2000	SCALE: NOTED; SHEET C-15

File: C-15.DWG ID: ROHS
Path: G:\OU3-13-TANKFARM\9-6-00 Drawn in Model Space
Bellsouth/RNS/00 - 3:45 P.M.

19/26

19

REVISIONS		
REV	DESCRIPTION	EFFECTIVE DATE:

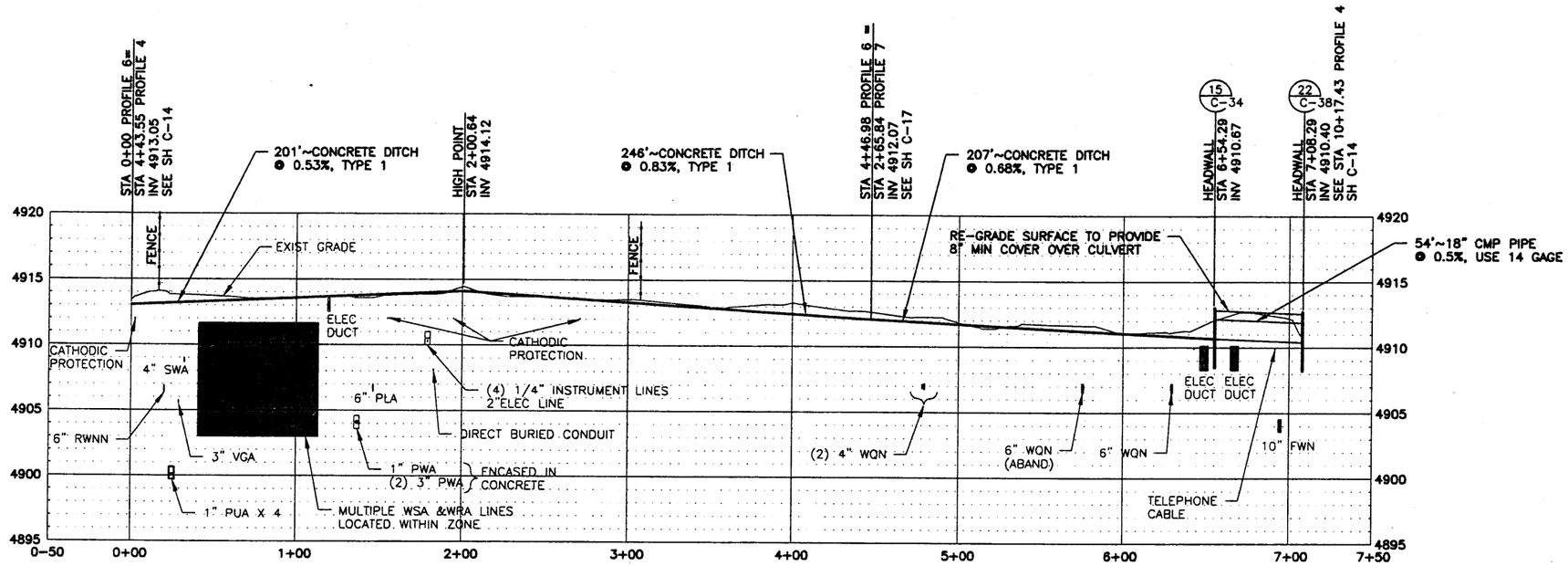

ALIGNMENT 6 PROFILE

SCALE: HOR 1"=40'
VER 1"=5'

REF
C-1
C-8
C-14
C-17

NOTES

1. ELEVATIONS AND LOCATIONS OF ELECTRICAL DUCT BANKS AND PIPES SHOWN SHADED ARE APPROXIMATE ELEVATIONS AND LOCATIONS ONLY.
2. HORIZONTAL COORDINATES ARE INTEC SITE SPECIFIC. VERTICAL DATUM IS NRTS (0.35' HIGHER THAN INTEC VERTICAL DATUM).

REVISION: 0
ORIGINAL SIGNED BY: KURT D. FRITZ
DATE ORIGINAL SIGNED: 9/18/2000
SEAL NUMBER: 9404
ORIGINAL STORED AT: EROB DOCUMENT CONTROL

PROFESSIONAL ENGINEER REGISTERED 9404 STATE OF IDAHO KURT D. FRITZ

FOR DRAWING INDEX SEE DRAWING NO. 515158	SUBCONTRACT NO. S00-588051	INEEL
HORIZONTAL 1"=40' VERTICAL 1"=5'	REQUESTER: M.S. KAPTEIN DESIGN: KURT FRITZ DRAWN: ROB HERGESHEIMER PROJECT NO. 020978 SPEC CODE	INEEL OU 3-13 GROUP 1 TANK FARM INTERIM ACTION PHASE 1 & 2 ALIGNMENT 6 PROFILE
DESIGN PHASE: AFC	FOR REVIEW/APPROVAL SIGNATURES SEE DAR NO. 68366	SIZE D · CAGE CODE · INDEX CODE NUMBER: AREA 200, TYPE 0100, CL 02, ORIG 090 · DWG-515175 · REV
QUALITY LEVEL: 3	EFFECTIVE DATE: 9/18/2000	SCALE: NOTED · SHEET C-16

File: C-16.DWG ID: RDH5 Drawn in Model Space
Path: G:\OU3-13-TANKFARM\9-6-00 Bailey\09/18/00 - 3:46 P.M.

REVISIONS		
REV	DESCRIPTION	EFFECTIVE DATE:

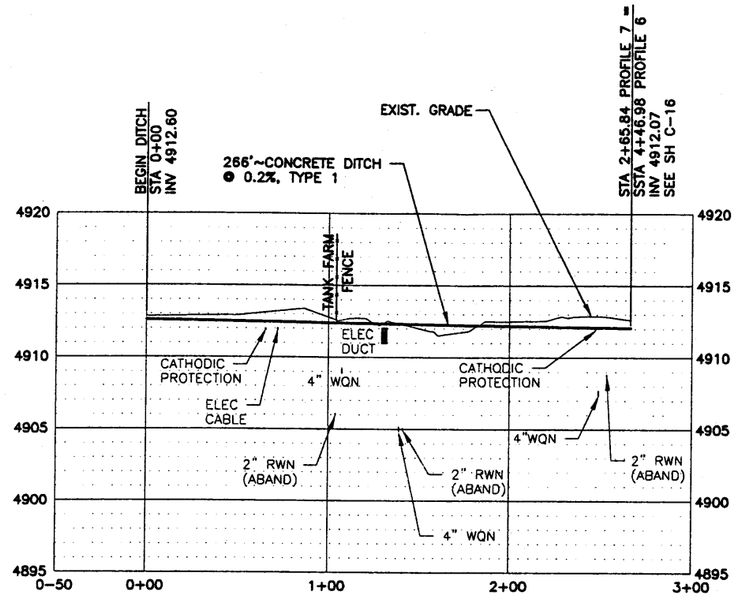

ALIGNMENT 7 PROFILE

SCALE: HOR 1"=40'
VER 1"=5'

REF
C-1
C-3
C-16

NOTES

1. ELEVATIONS AND LOCATIONS OF ELECTRICAL DUCT BANKS AND PIPES SHOWN SHADED ARE APPROXIMATE ELEVATIONS AND LOCATIONS ONLY.
2. HORIZONTAL COORDINATES ARE INTEC SITE SPECIFIC. VERTICAL DATUM IS NRTS (0.35' HIGHER THAN INTEC VERTICAL DATUM).

REVISION: 0
ORIGINAL SIGNED BY: KURT D. FRITZ
DATE ORIGINAL SIGNED: 9/18/2000
SEAL NUMBER: 9404
ORIGINAL STORED AT: EROB DOCUMENT CONTROL

PROFESSIONAL ENGINEER REGISTERED 9404 STATE OF IDAHO KURT D. FRITZ

FOR DRAWING INDEX SEE DRAWING NO. 515158	SUBCONTRACT NO. S00-588051	INEEL Idaho National Engineering & Environmental Laboratory BECHTEL BWXT IDAHO, LLC
HORIZONTAL 1"=40' VERTICAL 1"=5'	REQUESTER: M.S. KAPTEIN DESIGN: KURT FRITZ DRAWN: ROB HERGESHEIMER PROJECT NO. 020978 SPEC CODE	INEEL OU 3-13 GROUP 1 TANK FARM INTERIM ACTION PHASE 1 & 2 ALIGNMENT 7 PROFILE
DESIGN PHASE: AFC	FOR REVIEW/APPROVAL SIGNATURES SEE DAR NO. 68366	SIZE D · CAGE CODE · INDEX CODE NUMBER: AREA 200, TYPE 0100, CL 02, ORIG 090 · DWG-515176 · REV
QUALITY LEVEL: 3	EFFECTIVE DATE: 9/18/2000	SCALE: NOTED · SHEET C-17

File: C-17.DWG ID: RDH5 Drawn in Model Space
Path: G:\OU3-13-TANKFARM\9-6-00 Dallas\09/18/00 - 3:48 P.M.

21/26

REVISIONS		
REV	DESCRIPTION	EFFECTIVE DATE:

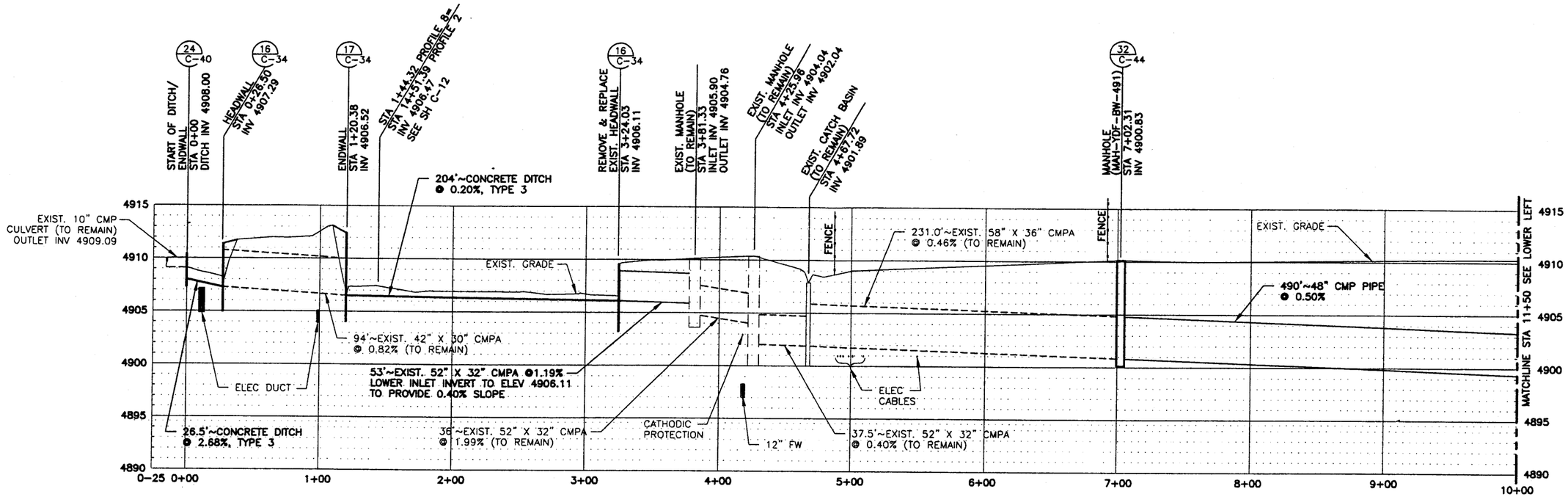

ALIGNMENT 8 PROFILE

SCALE: HOR 1"=40'
VER 1"=5'

REF
C-1
C-9
C-10
C-12

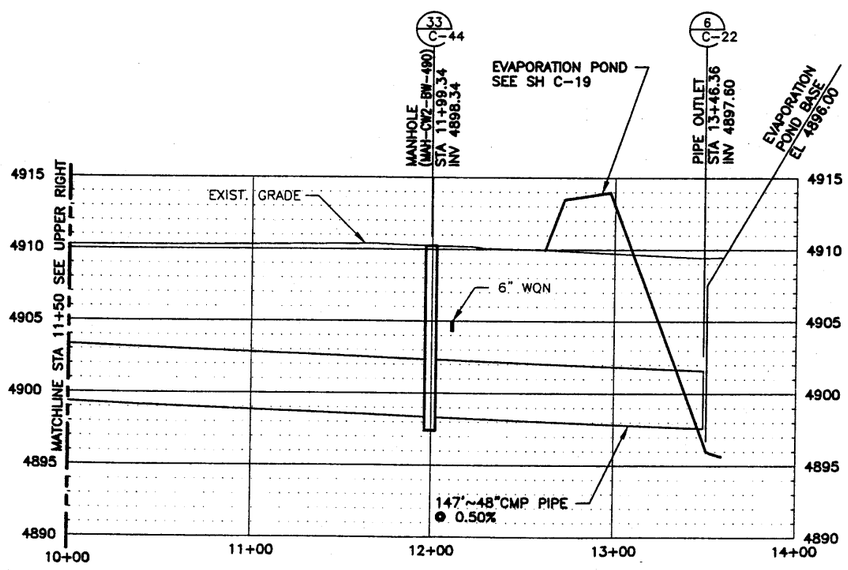

NOTES

1. ELEVATIONS AND LOCATIONS OF ELECTRICAL DUCT BANKS AND PIPES SHOWN SHADED ARE APPROXIMATE ELEVATIONS AND LOCATIONS ONLY.
2. HORIZONTAL COORDINATES ARE INTEC SITE SPECIFIC. VERTICAL DATUM IS NRTS (0.35' HIGHER THAN INTEC VERTICAL DATUM).

REVISION: 0
ORIGINAL SIGNED BY: KURT D. FRITZ
DATE ORIGINAL SIGNED: 9/18/2000
SEAL NUMBER: 9404
ORIGINAL STORED AT: EROB DOCUMENT CONTROL

PROFESSIONAL ENGINEER REGISTERED 9404 STATE OF IDAHO KURT D. FRITZ

FOR DRAWING INDEX SEE DRAWING NO. 515158	SUBCONTRACT NO. S00-588051
HORIZONTAL 1"=40' VERTICAL 1"=5'	REQUESTER: M.S. KAPTEIN
	DESIGN: KURT FRITZ
	DRAWN: ROB HERGESHEIMER
	PROJECT NO. 020978
	SPEC CODE
DESIGN PHASE: AFC	FOR REVIEW/APPROVAL SIGNATURES SEE DAR NO. 68366
QUALITY LEVEL: 3	EFFECTIVE DATE: 9/18/2000

INEEL (Idaho National Engineering & Environmental Laboratory) BECHTEL BWXT IDAHO, LLC

INEEL
OU 3-13 GROUP 1
TANK FARM INTERIM ACTION
PHASE 1 & 2
ALIGNMENT 8 PROFILE

SIZE	CAGE CODE	INDEX CODE NUMBER: AREA	TYPE	CI	ORIG	DWG-	REV
D		200	0100	02	090	515177	

SCALE: NOTED
SHEET C-18

FWT-01-REV 3.1

File: C-18.DWG
Path: G:\OU3-13-TANKFARM\3-8-00
ID: RDH5
Drawn in Model Space
Date:09/19/00 - 3:50 P.M.

FIGURE I

STATE OF IDAHO
AREA CLASSIFICATION MAP

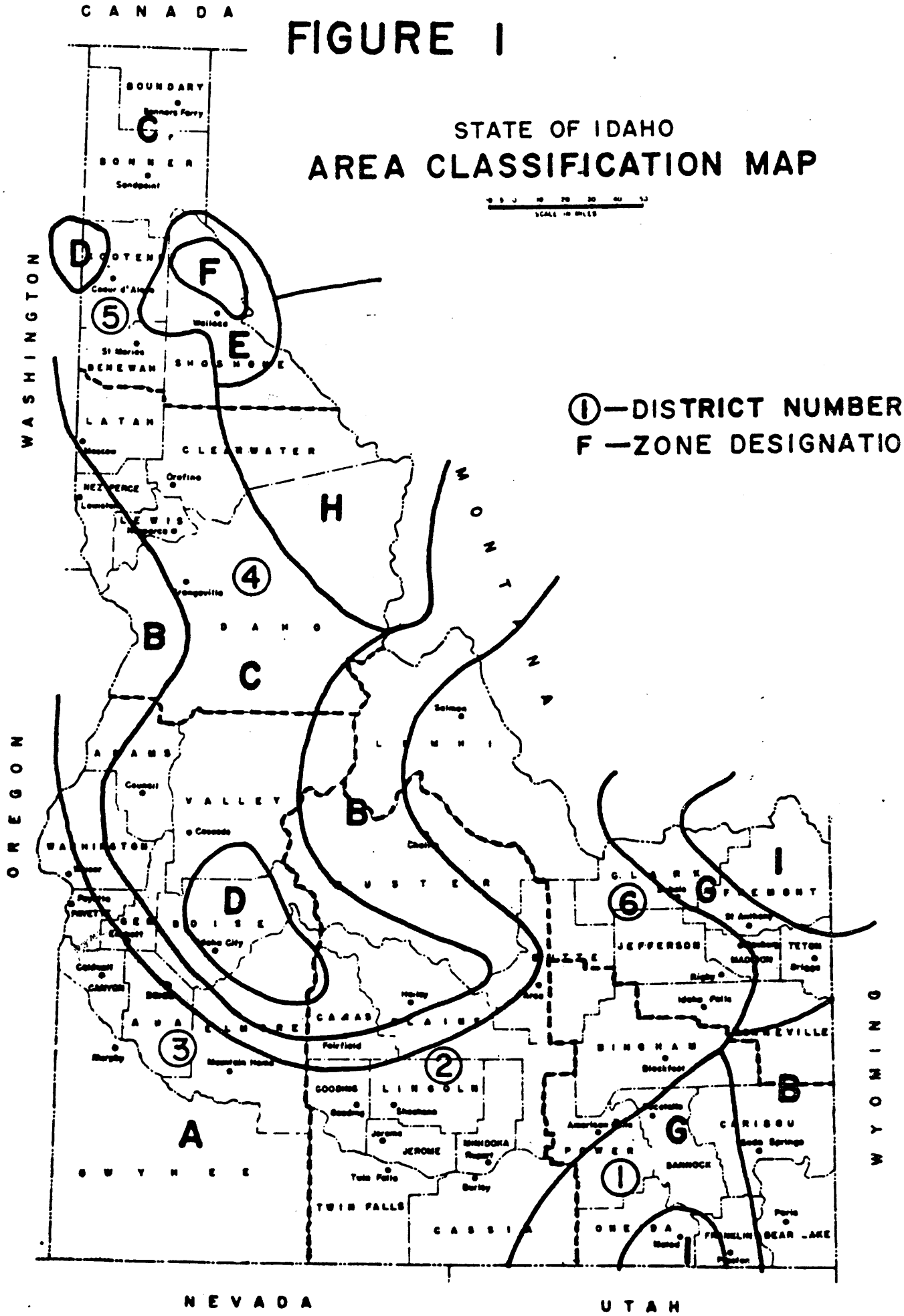

FIGURE I-A

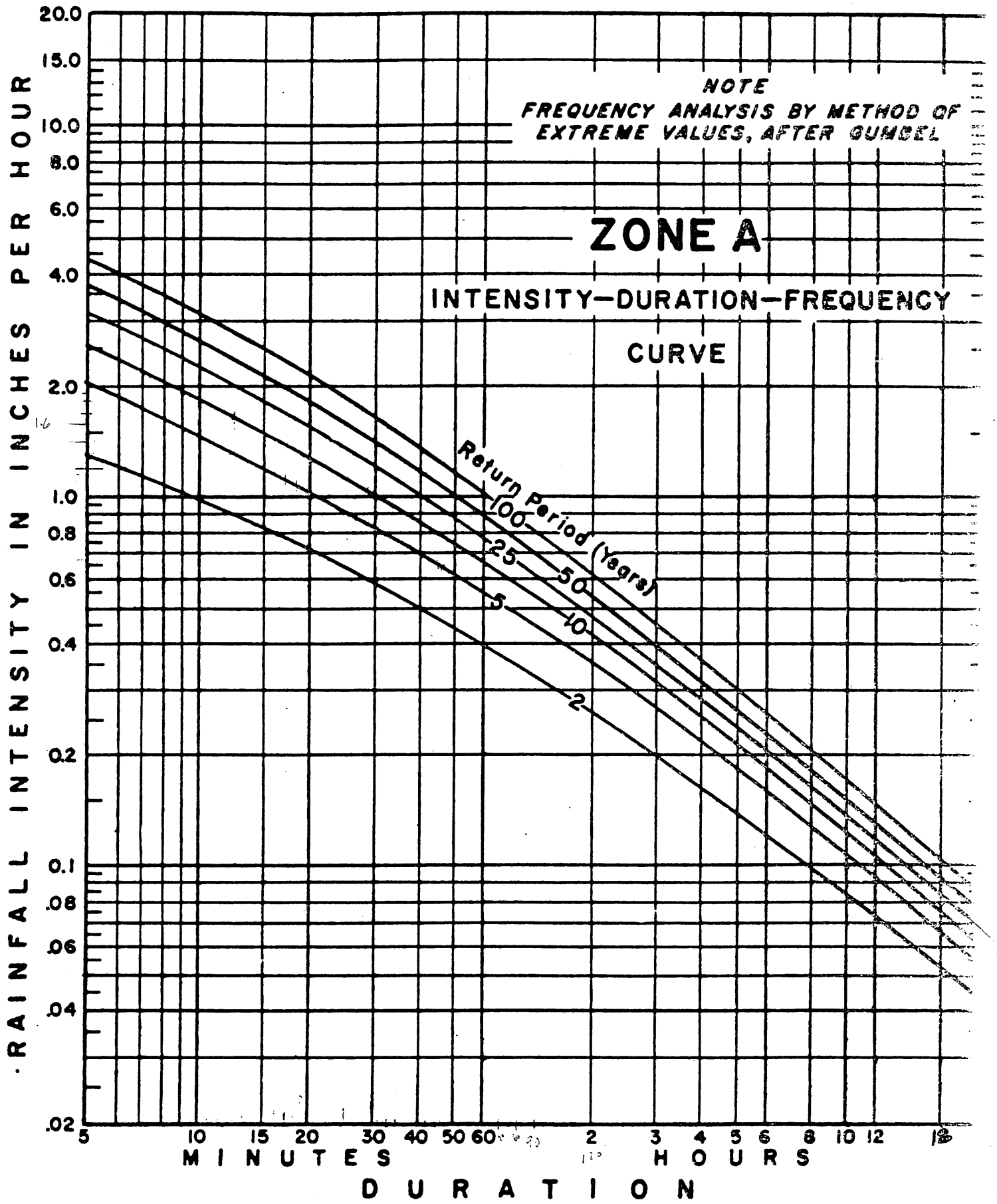
NOTE
FREQUENCY ANALYSIS BY METHOD OF EXTREME VALUES, AFTER GUMBEL
ZONE A
INTENSITY—DURATION—FREQUENCY CURVE
Return Period (Years)
100
25
50
5
10
2
RAINFALL INTENSITY IN INCHES PER HOUR
20.0
15.0
10.0
8.0
6.0
4.0
2.0
1.0
0.8
0.6
0.4
0.2
0.1
.08
.06
.04
.02
5
10
15
20
30
40
50
60
2
3
4
5
6
8
10
12
18
MINUTES
HOURS
DURATION

FIGURE III

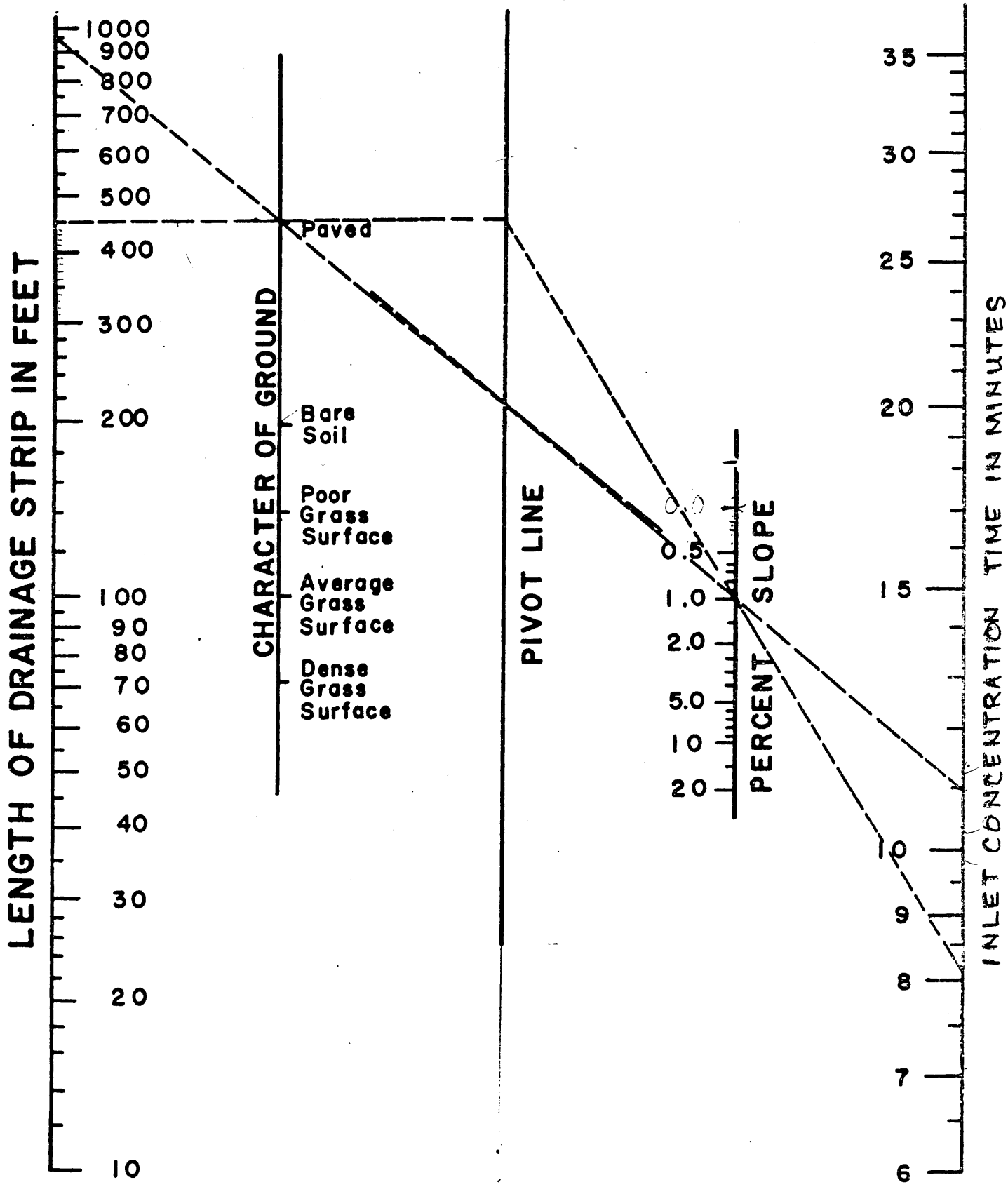

OVERLAND FLOW TIME

25/26

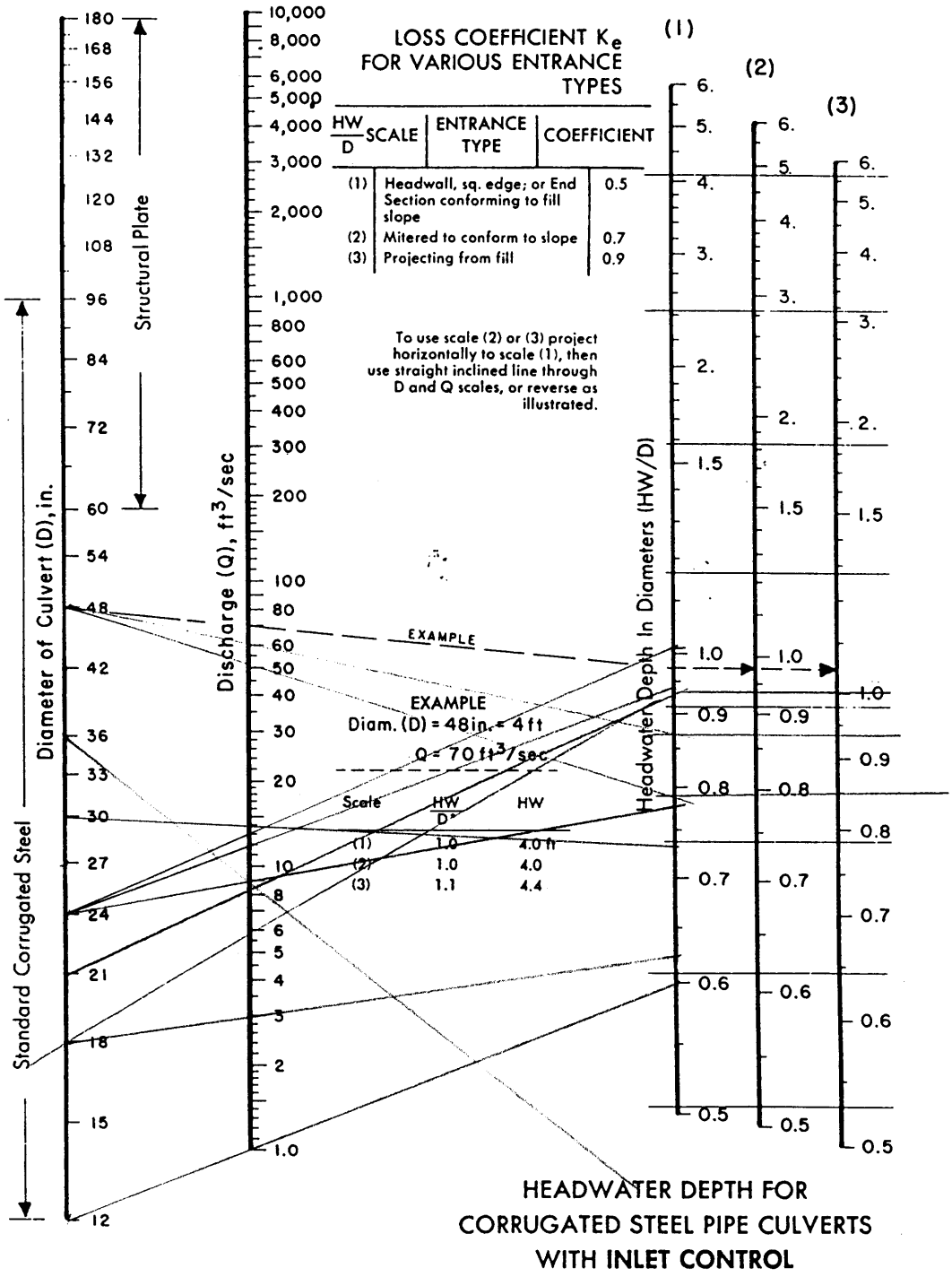

FHWA HEC 5

Figure 4-28 *Inlet control* nomograph for corrugated steel *pipe* culverts. The manufacturers recommended keeping *HWID* to a maximum of 1.5 and preferably to no more than 1.0.

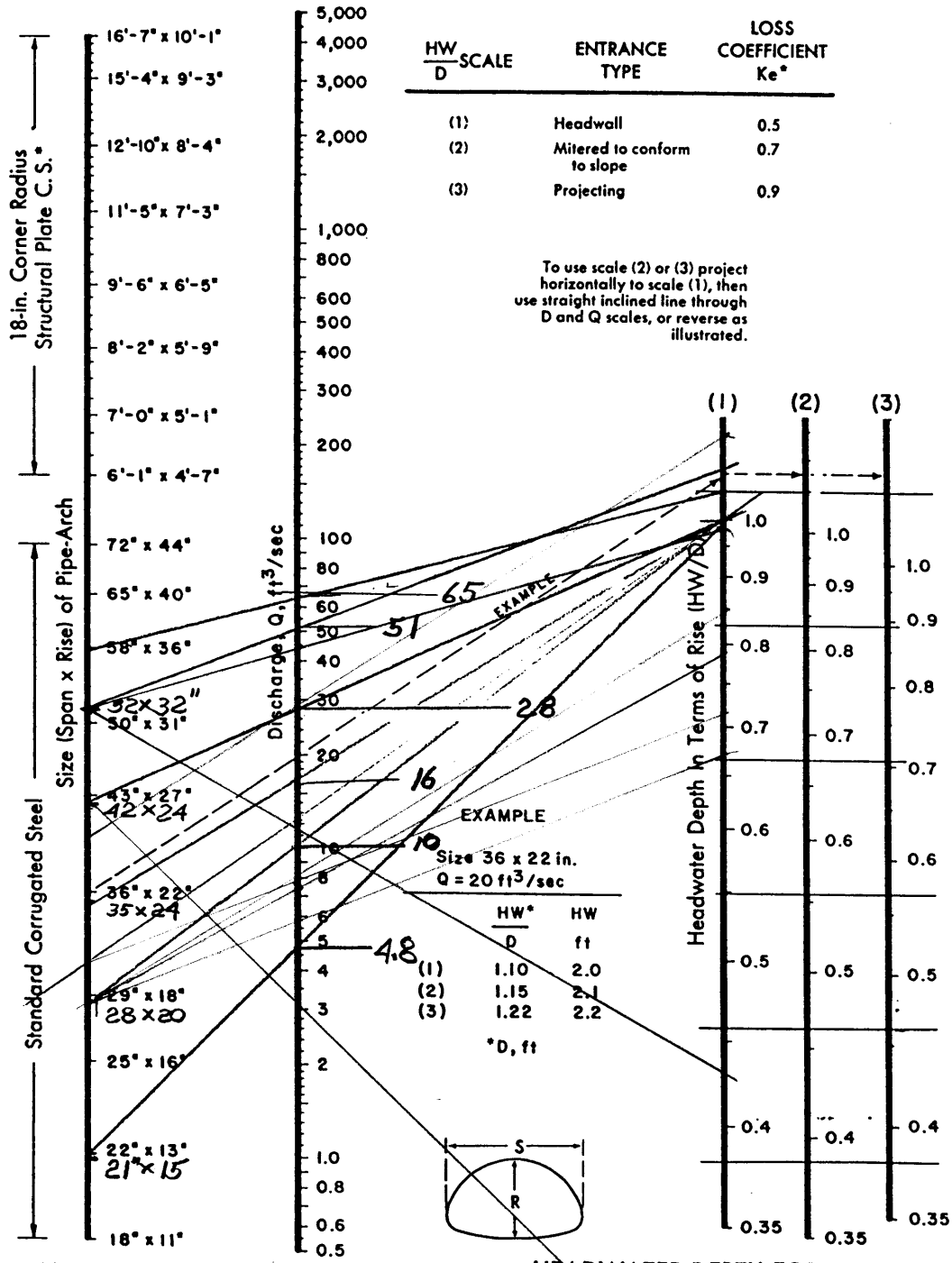

*Additional Sizes Not Dimensioned Are Listed In Fabricator's Catalog

Bureau of Public Roads Jan. 1963

HEADWATER DEPTH FOR CORRUGATED STEEL PIPE-ARCH CULVERTS WITH INLET CONTROL

Figure 4-30 *Inlet control* and headwater depths for corrugated steel *pipe-arch* culverts. Headwater depth should be kept low because pipe-arches are generally used where headroom is limited.

ATTACHMENTS

Alignment Worksheets:

Alignment 1

Alignment #1, 12" PVC Pipe @ 1.73%
Worksheet for Circular Channel

Project Description	
Project File	c:\job files\intec\interim action ph. 1\tf inter.fm2
Worksheet	Alignment #1, 12" PVC Pipe @ 1.73%
Flow Element	Circular Channel
Method	Manning's Formula
Solve For	Discharge

Input Data		
Mannings Coefficient	0.009	
Channel Slope	0.017300	ft/ft
Depth	1.00	ft
Diameter	12.00	in

Results		
Discharge	6.77	cfs
Flow Area	0.79	ft^2
Wetted Perimeter	3.14	ft
Top Width	0.3e-7	ft
Critical Depth	0.97	ft
Percent Full	100.00	
Critical Slope	0.015266	ft/ft
Velocity	8.62	ft/s
Velocity Head	1.15	ft
Specific Energy	2.15	ft
Froude Number	0.3e-3	
Maximum Discharge	7.28	cfs
Full Flow Capacity	6.77	cfs
Full Flow Slope	0.017300	ft/ft
Flow is subcritical.		

ACO DRAIN® III

FG 200 8" Wide

Trench Drain System

ACO FG 200, 8" wide trench drain system, is designed for applications requiring higher volumes of fluids. The FG 200 features an advanced hydraulic shape with a built-in slope of 1% and an extremely low coefficient of friction. These elements combined, provide quick and efficient surface drainage. The wide interior of the trench allows not only for increased hydraulic capacity but also for an efficient means of handling fluids. Dynamic wheel loading capabilities (class E) and aggressive chemical resistance are also inherent features of this revolutionary trench drain system.

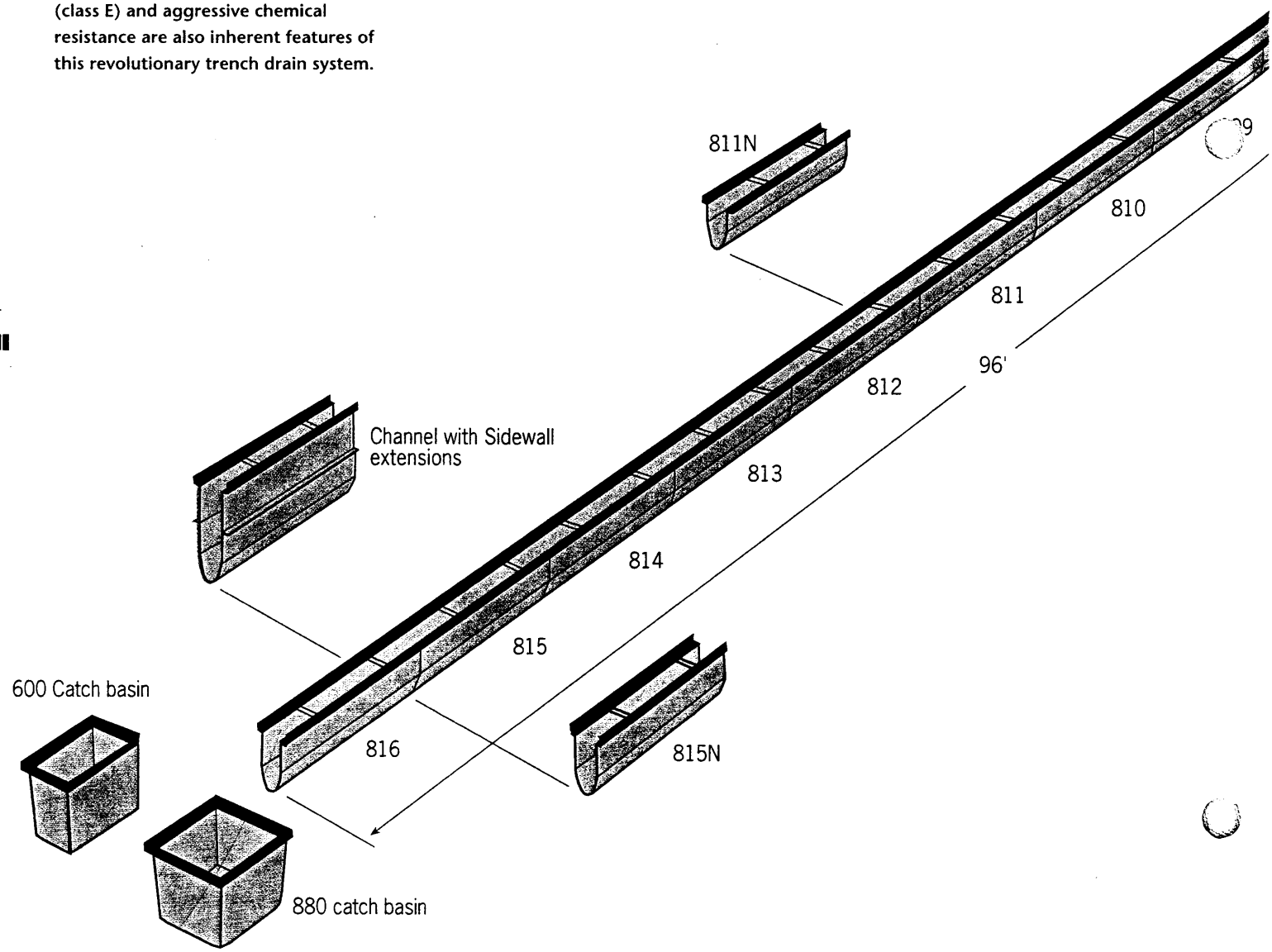

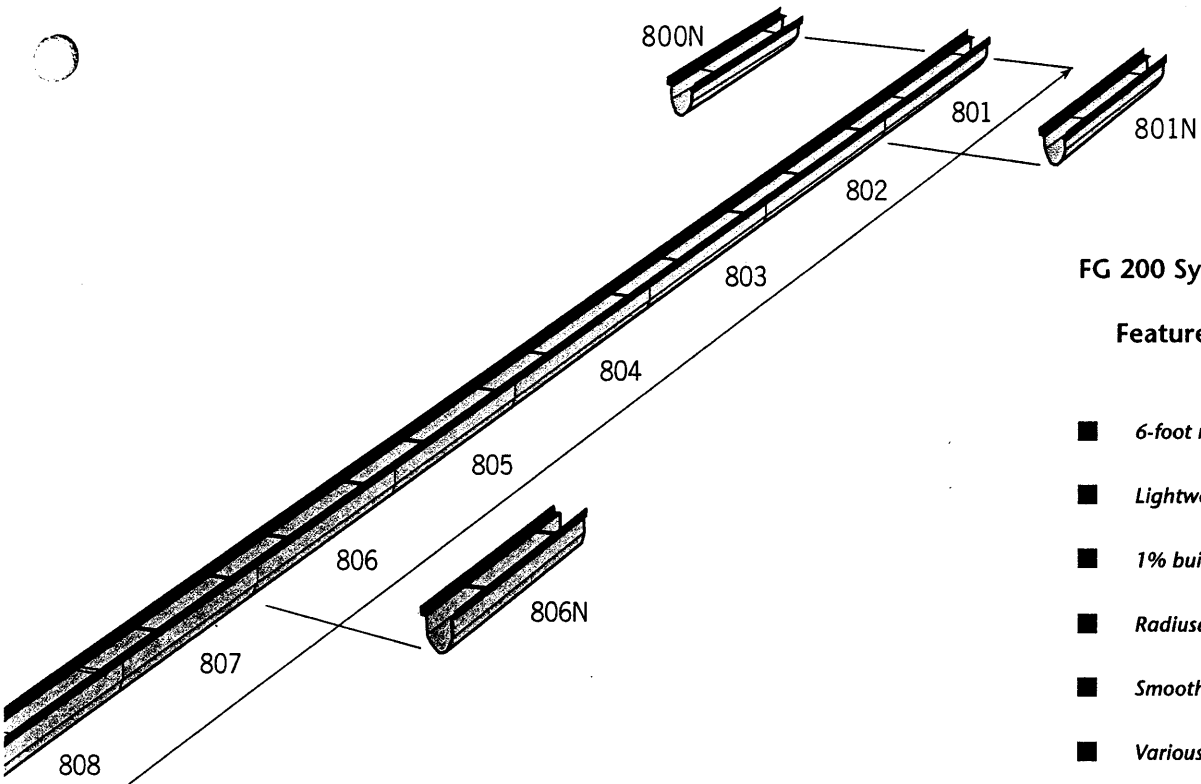

FG 200 System

Features & Benefits

- *6-foot modular channel sections*
- *Lightweight channel units*
- *1% built-in slope*
- *Radiused bottom*
- *Smooth interior surface*
- *Various steel frame options*
- *Can be installed in 6', 12', 18' sections*
- *2" overlap joint between channels*
- *Nelson Stud welded concrete anchors*
- *Heavy duty dynamic wheel loading*
- *Choice of two catch basin sizes*
- *Versatility of outlet locations*

FG 200

Table of Hydraulic Data and Depths to Invert

Channel Only				Channel with Sidewall Extension		
Channel N°	Depth to invert (in)	Flow (gpm)	Flow (cfs)	Depth to Invert (in)	Flow (gpm)	Flow (cfs)
800N	5 1/2	N/A	N/A	17 1/2	N/A	N/A
801	6 1/4	381	0.85	18 1/4	2756	6.14
801N	6 1/4	N/A	N/A	18 1/4	N/A	N/A
802	7	512	1.14	19	2908	6.48
803	7 3/4	651	1.45	19 3/4	3065	6.83
804	8 1/2	790	1.76	20 1/2	3222	7.18
805	9 1/4	938	2.09	21 1/4	3375	7.52
806	10	1,082	2.41	22	3532	7.87
806N	10	N/A	N/A	22	N/A	N/A
807	10 3/4	1,230	2.74	22 3/4	3685	8.21
808	11 1/2	1,378	3.07	23 1/2	3842	8.56
809	12 1/4	1,530	3.41	24 1/4	3999	8.91
810	13	1,683	3.75	25	4156	9.26
811	13 3/4	1,836	4.09	25 3/4	4308	9.60
811N	13 3/4	N/A	N/A	25 3/4	N/A	N/A
812	14 1/2	1,988	4.43	26 1/2	4466	9.95
813	15 1/4	2,141	4.77	27 1/4	4623	10.30
814	16	2,293	5.11	28	4780	10.65
815	16 3/4	2,446	5.45	28 3/4	4937	11.00
815N	16 3/4	N/A	N/A	28 3/4	N/A	N/A
816	17 1/2	2,599	5.79	29 1/2	5094	11.35

Notes: Depths to invert are for deep end of channel; for depth at shallow end subtract $^3/_4$". Depths assume standard 1 $^1/_2$ " frame for 1 $^1/_4$ " thick grate. Flow rates are based upon average depth of channel.

Alignment 2

Alignment #2, Type 3 Ditch @ 0.2%
Worksheet for Trapezoidal Channel

Project Description	
Project File	c:\job files\intec\interim action ph. 1\tf inter.fm2
Worksheet	Alignment #2, Type 3 Ditch
Flow Element	Trapezoidal Channel
Method	Manning's Formula
Solve For	Discharge

Input Data		
Mannings Coefficient	0.013	
Channel Slope	0.002000	ft/ft
Depth	1.50	ft
Left Side Slope	2.000000	H : V
Right Side Slope	2.000000	H : V
Bottom Width	1.50	ft

Results		
Discharge	30.29	cfs
Flow Area	6.75	ft^2
Wetted Perimeter	8.21	ft
Top Width	7.50	ft
Critical Depth	1.38	ft
Critical Slope	0.002944	ft/ft
Velocity	4.49	ft/s
Velocity Head	0.31	ft
Specific Energy	1.81	ft
Froude Number	0.83	
Flow is subcritical.		

Alignment #2, 28" x 20" CMPA @ 0.29%
Worksheet for Circular Channel

Project Description	
Project File	c:\job files\intec\interim action ph. 1\tf inter.fm2
Worksheet	Alignment #2, 28" x 20" CMPA @ 0.29%
Flow Element	Circular Channel
Method	Manning's Formula
Solve For	Discharge

Input Data		
Mannings Coefficient	0.024	
Channel Slope	0.002900	ft/ft
Depth	2.00	ft
Diameter	24.00	in

Results		
Discharge	6.60	cfs
Flow Area	3.14	ft^2
Wetted Perimeter	6.28	ft
Top Width	0.6e-7	ft
Critical Depth	0.91	ft
Percent Full	100.00	
Critical Slope	0.016054	ft/ft
Velocity	2.10	ft/s
Velocity Head	0.07	ft
Specific Energy	2.07	ft
Froude Number	0.51e-4	
Maximum Discharge	7.10	cfs
Full Flow Capacity	6.60	cfs
Full Flow Slope	0.002900	ft/ft
Flow is subcritical.		

Alignment #2, Type 3 Ditch @ 0.3%
Worksheet for Trapezoidal Channel

Project Description	
Project File	c:\job files\intec\interim action ph. 1\tf inter.fm2
Worksheet	Alignment #2, Type 3 Ditch @ 0.3%
Flow Element	Trapezoidal Channel
Method	Manning's Formula
Solve For	Discharge

Input Data		
Mannings Coefficient	0.013	
Channel Slope	0.003000	ft/ft
Depth	1.50	ft
Left Side Slope	2.000000	H : V
Right Side Slope	2.000000	H : V
Bottom Width	1.50	ft

Results		
Discharge	37.09	cfs
Flow Area	6.75	ft^2
Wetted Perimeter	8.21	ft
Top Width	7.50	ft
Critical Depth	1.52	ft
Critical Slope	0.002869	ft/ft
Velocity	5.50	ft/s
Velocity Head	0.47	ft
Specific Energy	1.97	ft
Froude Number	1.02	
Flow is supercritical.		

Alignment #2, Arch Pipe 2 @ 0.5%
Worksheet for Circular Channel

Project Description	
Project File	c:\job files\intec\interim action ph. 1\tf inter.fm2
Worksheet	Alignment #2, Arch Pipe 2 @ 0.5%
Flow Element	Circular Channel
Method	Manning's Formula
Solve For	Discharge

Input Data		
Mannings Coefficient	0.024	
Channel Slope	0.005000	ft/ft
Depth	2.00	ft
Diameter	24.00	in

Results		
Discharge	8.66	cfs
Flow Area	3.14	ft^2
Wetted Perimeter	6.28	ft
Top Width	0.6e-7	ft
Critical Depth	1.05	ft
Percent Full	100.00	
Critical Slope	0.016988	ft/ft
Velocity	2.76	ft/s
Velocity Head	0.12	ft
Specific Energy	2.12	ft
Froude Number	0.67e-4	
Maximum Discharge	9.32	cfs
Full Flow Capacity	8.66	cfs
Full Flow Slope	0.005000	ft/ft
Flow is subcritical.		

Alignment #2, Type 3 Ditch @ 0.47%
Worksheet for Trapezoidal Channel

Project Description	
Project File	c:\job files\intec\interim action ph. 1\tf inter.fm2
Worksheet	Alignment #2, Type 3 Ditch @ 0.47%
Flow Element	Trapezoidal Channel
Method	Manning's Formula
Solve For	Discharge

Input Data		
Mannings Coefficient	0.013	
Channel Slope	0.004700	ft/ft
Depth	1.50	ft
Left Side Slope	2.000000	H : V
Right Side Slope	2.000000	H : V
Bottom Width	1.50	ft

Results		
Discharge	46.43	cfs
Flow Area	6.75	ft^2
Wetted Perimeter	8.21	ft
Top Width	7.50	ft
Critical Depth	1.68	ft
Critical Slope	0.002789	ft/ft
Velocity	6.88	ft/s
Velocity Head	0.74	ft
Specific Energy	2.24	ft
Froude Number	1.28	
Flow is supercritical.		

Alignment #2, 28" x 20" CMPA @ 0.57%
Worksheet for Circular Channel

Project Description	
Project File	c:\job files\intec\interim action ph. 1\tf inter.fm2
Worksheet	Alignment #2, Arch Pipe 3 @ 0.57%
Flow Element	Circular Channel
Method	Manning's Formula
Solve For	Discharge

Input Data		
Mannings Coefficient	0.024	
Channel Slope	0.005700	ft/ft
Depth	2.00	ft
Diameter	24.00	in

Results		
Discharge	9.25	cfs
Flow Area	3.14	ft^2
Wetted Perimeter	6.28	ft
Top Width	0.6e-7	ft
Critical Depth	1.09	ft
Percent Full	100.00	
Critical Slope	0.017298	ft/ft
Velocity	2.94	ft/s
Velocity Head	0.13	ft
Specific Energy	2.13	ft
Froude Number	0.72e-4	
Maximum Discharge	9.95	cfs
Full Flow Capacity	9.25	cfs
Full Flow Slope	0.005700	ft/ft
Flow is subcritical.		

Alignment #2, Type 3 Ditch @ 0.86%
Worksheet for Trapezoidal Channel

Project Description	
Project File	c:\job files\intec\interim action ph. 1\tf inter.fm2
Worksheet	Alignment #2, Type 3 Ditch @ 0.86%
Flow Element	Trapezoidal Channel
Method	Manning's Formula
Solve For	Discharge

Input Data		
Mannings Coefficient	0.013	
Channel Slope	0.008600	ft/ft
Depth	1.50	ft
Left Side Slope	2.000000	H : V
Right Side Slope	2.000000	H : V
Bottom Width	1.50	ft

Results		
Discharge	62.80	cfs
Flow Area	6.75	ft^2
Wetted Perimeter	8.21	ft
Top Width	7.50	ft
Critical Depth	1.94	ft
Critical Slope	0.002684	ft/ft
Velocity	9.30	ft/s
Velocity Head	1.35	ft
Specific Energy	2.85	ft
Froude Number	1.73	
Flow is supercritical.		

Alignment #2, Existing 24" CMP @ 1.45%
Worksheet for Circular Channel

Project Description	
Project File	c:\job files\intec\interim action ph. 1\tf inter.fm2
Worksheet	Alignment #2, Existing 24" CMP @ 1.45%
Flow Element	Circular Channel
Method	Manning's Formula
Solve For	Discharge

Input Data		
Mannings Coefficient	0.024	
Channel Slope	0.014500	ft/ft
Depth	2.00	ft
Diameter	24.00	in

Results		
Discharge	14.75	cfs
Flow Area	3.14	ft^2
Wetted Perimeter	6.28	ft
Top Width	0.6e-7	ft
Critical Depth	1.38	ft
Percent Full	100.00	
Critical Slope	0.021303	ft/ft
Velocity	4.70	ft/s
Velocity Head	0.34	ft
Specific Energy	2.34	ft
Froude Number	0.11e-3	
Maximum Discharge	15.87	cfs
Full Flow Capacity	14.75	cfs
Full Flow Slope	0.014500	ft/ft
Flow is subcritical.		

Alignment #2, Type 3 Ditch @ 0.57%
Worksheet for Trapezoidal Channel

Project Description	
Project File	c:\job files\intec\interim action ph. 1\tf inter.fm2
Worksheet	Alignment #2, Type 3 Ditch @ 0.57%
Flow Element	Trapezoidal Channel
Method	Manning's Formula
Solve For	Discharge

Input Data		
Mannings Coefficient	0.013	
Channel Slope	0.005700	ft/ft
Depth	1.50	ft
Left Side Slope	2.000000	H : V
Right Side Slope	2.000000	H : V
Bottom Width	1.50	ft

Results		
Discharge	51.13	cfs
Flow Area	6.75	ft^2
Wetted Perimeter	8.21	ft
Top Width	7.50	ft
Critical Depth	1.76	ft
Critical Slope	0.002755	ft/ft
Velocity	7.57	ft/s
Velocity Head	0.89	ft
Specific Energy	2.39	ft
Froude Number	1.41	
Flow is supercritical.		

Alignment #2, 24" CMP @ 0.67%
Worksheet for Circular Channel

Project Description	
Project File	c:\job files\intec\interim action ph. 1\tf inter.fm2
Worksheet	Alignment #2, 24" CMP @ 0.67%
Flow Element	Circular Channel
Method	Manning's Formula
Solve For	Discharge

Input Data		
Mannings Coefficient	0.024	
Channel Slope	0.006700	ft/ft
Depth	2.00	ft
Diameter	24.00	in

Results		
Discharge	10.03	cfs
Flow Area	3.14	ft^2
Wetted Perimeter	6.28	ft
Top Width	0.6e-7	ft
Critical Depth	1.13	ft
Percent Full	100.00	
Critical Slope	0.017741	ft/ft
Velocity	3.19	ft/s
Velocity Head	0.16	ft
Specific Energy	2.16	ft
Froude Number	0.78e-4	
Maximum Discharge	10.79	cfs
Full Flow Capacity	10.03	cfs
Full Flow Slope	0.006700	ft/ft
Flow is subcritical.		

Alignment #2, Type 3 Ditch @ 0.68%
Worksheet for Trapezoidal Channel

Project Description	
Project File	c:\job files\intec\interim action ph. 1\tf inter.fm2
Worksheet	Alignment #2, Type 3 Ditch @ 0.68%
Flow Element	Trapezoidal Channel
Method	Manning's Formula
Solve For	Discharge

Input Data		
Mannings Coefficient	0.013	
Channel Slope	0.006800	ft/ft
Depth	1.50	ft
Left Side Slope	2.000000	H : V
Right Side Slope	2.000000	H : V
Bottom Width	1.50	ft

Results		
Discharge	55.84	cfs
Flow Area	6.75	ft^2
Wetted Perimeter	8.21	ft
Top Width	7.50	ft
Critical Depth	1.84	ft
Critical Slope	0.002724	ft/ft
Velocity	8.27	ft/s
Velocity Head	1.06	ft
Specific Energy	2.56	ft
Froude Number	1.54	
Flow is supercritical.		

Alignment #2, Existing 36" CMP @ 0.34%
Worksheet for Circular Channel

Project Description	
Project File	c:\job files\intec\interim action ph. 1\tf inter.fm2
Worksheet	Alignment #2, Existing 36" CMP @ 0.34%
Flow Element	Circular Channel
Method	Manning's Formula
Solve For	Discharge

Input Data		
Mannings Coefficient	0.024	
Channel Slope	0.003400	ft/ft
Depth	3.00	ft
Diameter	36.00	in

Results		
Discharge	21.07	cfs
Flow Area	7.07	ft^2
Wetted Perimeter	9.42	ft
Top Width	0.73e-7	ft
Critical Depth	1.47	ft
Percent Full	100.00	
Critical Slope	0.014410	ft/ft
Velocity	2.98	ft/s
Velocity Head	0.14	ft
Specific Energy	3.14	ft
Froude Number	0.53e-4	
Maximum Discharge	22.66	cfs
Full Flow Capacity	21.07	cfs
Full Flow Slope	0.003400	ft/ft
Flow is subcritical.		

Alignment #2, Type 3 Ditch @ 3.88%
Worksheet for Trapezoidal Channel

Project Description	
Project File	c:\job files\intec\interim action ph. 1\tf inter.fm2
Worksheet	Alignment #2, Type 3 Ditch @ 3.88%
Flow Element	Trapezoidal Channel
Method	Manning's Formula
Solve For	Discharge

Input Data		
Mannings Coefficient	0.013	
Channel Slope	0.038800	ft/ft
Depth	1.50	ft
Left Side Slope	2.000000	H : V
Right Side Slope	2.000000	H : V
Bottom Width	5.00	ft

Results		
Discharge	274.65	cfs
Flow Area	12.00	ft^2
Wetted Perimeter	11.71	ft
Top Width	11.00	ft
Critical Depth	3.08	ft
Critical Slope	0.002182	ft/ft
Velocity	22.89	ft/s
Velocity Head	8.14	ft
Specific Energy	9.64	ft
Froude Number	3.86	
Flow is supercritical.		

Alignment 3

Alignment #3, Type 1 Ditch @0.2%
Worksheet for Triangular Channel

Project Description	
Project File	c:\job files\intec\interim action ph. 1\tf inter.fm2
Worksheet	Alignment #3
Flow Element	Triangular Channel
Method	Manning's Formula
Solve For	Discharge

Input Data		
Mannings Coefficient	0.013	
Channel Slope	0.002000	ft/ft
Depth	0.50	ft
Left Side Slope	5.000000	H : V
Right Side Slope	5.000000	H : V

Results		
Discharge	2.50	cfs
Flow Area	1.25	ft^2
Wetted Perimeter	5.10	ft
Top Width	5.00	ft
Critical Depth	0.43	ft
Critical Slope	0.004203	ft/ft
Velocity	2.00	ft/s
Velocity Head	0.06	ft
Specific Energy	0.56	ft
Froude Number	0.71	
Flow is subcritical.		

Alignment #3, 12" CMP @ 0.67%
Worksheet for Circular Channel

Project Description	
Project File	c:\job files\intec\interim action ph. 1\tf inter.fm2
Worksheet	Alignment #3, 12" CMP @ 0.67%
Flow Element	Circular Channel
Method	Manning's Formula
Solve For	Discharge

Input Data		
Mannings Coefficient	0.024	
Channel Slope	0.006700	ft/ft
Depth	1.00	ft
Diameter	12.00	in

Results		
Discharge	1.58	cfs
Flow Area	0.79	ft^2
Wetted Perimeter	3.14	ft
Top Width	0.3e-7	ft
Critical Depth	0.53	ft
Percent Full	100.00	
Critical Slope	0.021580	ft/ft
Velocity	2.01	ft/s
Velocity Head	0.06	ft
Specific Energy	1.06	ft
Froude Number	0.69e-4	
Maximum Discharge	1.70	cfs
Full Flow Capacity	1.58	cfs
Full Flow Slope	0.006700	ft/ft
Flow is subcritical.		

Alignment 4

Alignment #4, Type 1 Ditch @ 0.57%
Worksheet for Triangular Channel

Project Description	
Project File	c:\job files\intec\interim action ph. 1\tf inter.fm2
Worksheet	Alignment #4, Type 1 Ditch @ 0.57%
Flow Element	Triangular Channel
Method	Manning's Formula
Solve For	Discharge

Input Data		
Mannings Coefficient	0.013	
Channel Slope	0.005700	ft/ft
Depth	0.50	ft
Left Side Slope	5.000000	H : V
Right Side Slope	5.000000	H : V

Results		
Discharge	4.23	cfs
Flow Area	1.25	ft^2
Wetted Perimeter	5.10	ft
Top Width	5.00	ft
Critical Depth	0.54	ft
Critical Slope	0.003920	ft/ft
Velocity	3.38	ft/s
Velocity Head	0.18	ft
Specific Energy	0.68	ft
Froude Number	1.19	
Flow is supercritical.		

Alignment #4, Type 1 Ditch @ 2.98%
Worksheet for Triangular Channel

Project Description	
Project File	c:\job files\intec\interim action ph. 1\tf inter.fm2
Worksheet	Alignment #4, Type 1 Ditch @ 2.98%
Flow Element	Triangular Channel
Method	Manning's Formula
Solve For	Discharge

Input Data		
Mannings Coefficient	0.013	
Channel Slope	0.029800	ft/ft
Depth	0.50	ft
Left Side Slope	5.000000	H : V
Right Side Slope	5.000000	H : V

Results		
Discharge	9.66	cfs
Flow Area	1.25	ft^2
Wetted Perimeter	5.10	ft
Top Width	5.00	ft
Critical Depth	0.75	ft
Critical Slope	0.003511	ft/ft
Velocity	7.73	ft/s
Velocity Head	0.93	ft
Specific Energy	1.43	ft
Froude Number	2.73	
Flow is supercritical.		

Alignment #4 Type 1 Ditch @ 0.4%
Worksheet for Triangular Channel

Project Description	
Project File	c:\job files\intec\interim action ph. 1\tf inter.fm2
Worksheet	Alignment #4, Type 1 Ditch @ 0.4%
Flow Element	Triangular Channel
Method	Manning's Formula
Solve For	Discharge

Input Data		
Mannings Coefficient	0.013	
Channel Slope	0.004000	ft/ft
Depth	0.50	ft
Left Side Slope	5.000000	H : V
Right Side Slope	5.000000	H : V

Results		
Discharge	3.54	cfs
Flow Area	1.25	ft^2
Wetted Perimeter	5.10	ft
Top Width	5.00	ft
Critical Depth	0.50	ft
Critical Slope	0.004013	ft/ft
Velocity	2.83	ft/s
Velocity Head	0.12	ft
Specific Energy	0.62	ft
Froude Number	1.00	
Flow is subcritical.		

Alignment #4, Type 2 Ditch @ 0.4%
Worksheet for Triangular Channel

Project Description	
Project File	c:\job files\intec\interim action ph. 1\tf inter.fm2
Worksheet	Alignment #4, Type 2 Ditch @ 0.4%
Flow Element	Triangular Channel
Method	Manning's Formula
Solve For	Discharge

Input Data		
Mannings Coefficient	0.013	
Channel Slope	0.004000	ft/ft
Depth	0.63	ft
Left Side Slope	4.800000	H : V
Right Side Slope	4.800000	H : V

Results		
Discharge	6.15	cfs
Flow Area	1.87	ft^2
Wetted Perimeter	6.13	ft
Top Width	6.00	ft
Critical Depth	0.63	ft
Critical Slope	0.003716	ft/ft
Velocity	3.28	ft/s
Velocity Head	0.17	ft
Specific Energy	0.79	ft
Froude Number	1.04	
Flow is supercritical.		

Alignment #4, Type 3 Ditch @ 0.2%
Worksheet for Trapezoidal Channel

Project Description	
Project File	c:\job files\intec\interim action ph. 1\tf inter.fm2
Worksheet	Alignment #4, Type 3 Ditch @ 0.2%
Flow Element	Trapezoidal Channel
Method	Manning's Formula
Solve For	Discharge

Input Data		
Mannings Coefficient	0.013	
Channel Slope	0.002000	ft/ft
Depth	1.50	ft
Left Side Slope	2.000000	H : V
Right Side Slope	2.000000	H : V
Bottom Width	1.50	ft

Results		
Discharge	30.29	cfs
Flow Area	6.75	ft^2
Wetted Perimeter	8.21	ft
Top Width	7.50	ft
Critical Depth	1.38	ft
Critical Slope	0.002944	ft/ft
Velocity	4.49	ft/s
Velocity Head	0.31	ft
Specific Energy	1.81	ft
Froude Number	0.83	
Flow is subcritical.		

Alignment #4, 24" CMP @ 0.91%
Worksheet for Circular Channel

Project Description	
Project File	c:\job files\intec\interim action ph. 1\tf inter.fm2
Worksheet	Alignment #4, 24" CMP @ 0.91%
Flow Element	Circular Channel
Method	Manning's Formula
Solve For	Discharge

Input Data		
Mannings Coefficient	0.024	
Channel Slope	0.009100	ft/ft
Depth	2.00	ft
Diameter	24.00	in

Results		
Discharge	11.69	cfs
Flow Area	3.14	ft^2
Wetted Perimeter	6.28	ft
Top Width	0.6e-7	ft
Critical Depth	1.23	ft
Percent Full	100.00	
Critical Slope	0.018811	ft/ft
Velocity	3.72	ft/s
Velocity Head	0.22	ft
Specific Energy	2.22	ft
Froude Number	0.9e-4	
Maximum Discharge	12.57	cfs
Full Flow Capacity	11.69	cfs
Full Flow Slope	0.009100	ft/ft
Flow is subcritical.		

Alignment #4, Type 3 Ditch @ 0.22%
Worksheet for Trapezoidal Channel

Project Description	
Project File	c:\job files\intec\interim action ph. 1\tf inter.fm2
Worksheet	Alignment #4, Type 3 Ditch @ 0.22%
Flow Element	Trapezoidal Channel
Method	Manning's Formula
Solve For	Discharge

Input Data		
Mannings Coefficient	0.013	
Channel Slope	0.002200	ft/ft
Depth	1.50	ft
Left Side Slope	2.000000	H : V
Right Side Slope	2.000000	H : V
Bottom Width	1.50	ft

Results		
Discharge	31.76	cfs
Flow Area	6.75	ft^2
Wetted Perimeter	8.21	ft
Top Width	7.50	ft
Critical Depth	1.41	ft
Critical Slope	0.002926	ft/ft
Velocity	4.71	ft/s
Velocity Head	0.34	ft
Specific Energy	1.84	ft
Froude Number	0.87	
Flow is subcritical.		

Alignment #4, 24" CMP @ 1.0%
Worksheet for Circular Channel

Project Description	
Project File	c:\job files\intec\interim action ph. 1\tf inter.fm2
Worksheet	Alignment #4, 24" CMP @ 1.0%
Flow Element	Circular Channel
Method	Manning's Formula
Solve For	Discharge

Input Data		
Mannings Coefficient	0.024	
Channel Slope	0.010000	ft/ft
Depth	2.00	ft
Diameter	24.00	in

Results		
Discharge	12.25	cfs
Flow Area	3.14	ft^2
Wetted Perimeter	6.28	ft
Top Width	0.6e-7	ft
Critical Depth	1.26	ft
Percent Full	100.00	
Critical Slope	0.019217	ft/ft
Velocity	3.90	ft/s
Velocity Head	0.24	ft
Specific Energy	2.24	ft
Froude Number	0.95e-4	
Maximum Discharge	13.18	cfs
Full Flow Capacity	12.25	cfs
Full Flow Slope	0.010000	ft/ft
Flow is subcritical.		

Rectangular Conc. Structure @ 3.1%
Worksheet for Rectangular Channel

Project Description	
Project File	c:\job files\intec\interim action ph. 1\tf inter.fm2
Worksheet	Alignment #4, Rectangular Conc Struct
Flow Element	Rectangular Channel
Method	Manning's Formula
Solve For	Discharge

Input Data		
Mannings Coefficient	0.013	
Channel Slope	0.031400	ft/ft
Depth	1.50	ft
Bottom Width	6.00	ft

Results		
Discharge	182.29	cfs
Flow Area	9.00	ft^2
Wetted Perimeter	9.00	ft
Top Width	6.00	ft
Critical Depth	3.06	ft
Critical Slope	0.004332	ft/ft
Velocity	20.25	ft/s
Velocity Head	6.38	ft
Specific Energy	7.88	ft
Froude Number	2.92	
Flow is supercritical.		

Alignment #4, Existing 24" CMP @ 1.05%
Worksheet for Circular Channel

Project Description	
Project File	c:\job files\intec\interim action ph. 1\tf inter.fm2
Worksheet	Alignment #4, Existing 24" CMP @ 1.05%
Flow Element	Circular Channel
Method	Manning's Formula
Solve For	Discharge

Input Data		
Mannings Coefficient	0.024	
Channel Slope	0.010500	ft/ft
Depth	2.00	ft
Diameter	24.00	in

Results		
Discharge	12.56	cfs
Flow Area	3.14	ft^2
Wetted Perimeter	6.28	ft
Top Width	0.6e-7	ft
Critical Depth	1.27	ft
Percent Full	100.00	
Critical Slope	0.019444	ft/ft
Velocity	4.00	ft/s
Velocity Head	0.25	ft
Specific Energy	2.25	ft
Froude Number	0.97e-4	
Maximum Discharge	13.51	cfs
Full Flow Capacity	12.56	cfs
Full Flow Slope	0.010500	ft/ft
Flow is subcritical.		

Alignment #4, Type 3 Ditch @ 0.21%
Worksheet for Trapezoidal Channel

Project Description	
Project File	c:\job files\intec\interim action ph. 1\tf inter.fm2
Worksheet	Alignment #4, Type 3 Ditch @ 0.21%
Flow Element	Trapezoidal Channel
Method	Manning's Formula
Solve For	Discharge

Input Data		
Mannings Coefficient	0.013	
Channel Slope	0.002100	ft/ft
Depth	1.50	ft
Left Side Slope	2.000000	H : V
Right Side Slope	2.000000	H : V
Bottom Width	1.50	ft

Results		
Discharge	31.03	cfs
Flow Area	6.75	ft^2
Wetted Perimeter	8.21	ft
Top Width	7.50	ft
Critical Depth	1.39	ft
Critical Slope	0.002935	ft/ft
Velocity	4.60	ft/s
Velocity Head	0.33	ft
Specific Energy	1.83	ft
Froude Number	0.85	
Flow is subcritical.		

Alignment #4, 30" CMP @ 0.34%
Worksheet for Circular Channel

Project Description	
Project File	c:\job files\intec\interim action ph. 1\tf inter.fm2
Worksheet	Alignment #4, 30" CMP @ 0.34%
Flow Element	Circular Channel
Method	Manning's Formula
Solve For	Discharge

Input Data		
Mannings Coefficient	0.024	
Channel Slope	0.003400	ft/ft
Depth	2.50	ft
Diameter	30.00	in

Results		
Discharge	12.95	cfs
Flow Area	4.91	ft^2
Wetted Perimeter	7.85	ft
Top Width	0.67e-7	ft
Critical Depth	1.21	ft
Percent Full	100.00	
Critical Slope	0.015218	ft/ft
Velocity	2.64	ft/s
Velocity Head	0.11	ft
Specific Energy	2.61	ft
Froude Number	0.54e-4	
Maximum Discharge	13.93	cfs
Full Flow Capacity	12.95	cfs
Full Flow Slope	0.003400	ft/ft
Flow is subcritical.		

Alignment #4, Type 3 Ditch @ 0.22%
Worksheet for Trapezoidal Channel

Project Description	
Project File	c:\job files\intec\interim action ph. 1\tf inter.fm2
Worksheet	Alignment #4, Type 3 Ditch @ 0.22%
Flow Element	Trapezoidal Channel
Method	Manning's Formula
Solve For	Discharge

Input Data		
Mannings Coefficient	0.013	
Channel Slope	0.002200	ft/ft
Depth	1.50	ft
Left Side Slope	2.000000	H : V
Right Side Slope	2.000000	H : V
Bottom Width	1.50	ft

Results		
Discharge	31.76	cfs
Flow Area	6.75	ft^2
Wetted Perimeter	8.21	ft
Top Width	7.50	ft
Critical Depth	1.41	ft
Critical Slope	0.002926	ft/ft
Velocity	4.71	ft/s
Velocity Head	0.34	ft
Specific Energy	1.84	ft
Froude Number	0.87	
Flow is subcritical.		

Alignment #4, Type 3 Ditch @ 1.59%
Worksheet for Trapezoidal Channel

Project Description	
Project File	c:\job files\intec\interim action ph. 1\tf inter.fm2
Worksheet	Alignment #4, Type 3 Ditch @ 1.59%
Flow Element	Trapezoidal Channel
Method	Manning's Formula
Solve For	Discharge

Input Data		
Mannings Coefficient	0.013	
Channel Slope	0.015900	ft/ft
Depth	1.50	ft
Left Side Slope	2.000000	H : V
Right Side Slope	2.000000	H : V
Bottom Width	1.50	ft

Results		
Discharge	85.39	cfs
Flow Area	6.75	ft^2
Wetted Perimeter	8.21	ft
Top Width	7.50	ft
Critical Depth	2.23	ft
Critical Slope	0.002581	ft/ft
Velocity	12.65	ft/s
Velocity Head	2.49	ft
Specific Energy	3.99	ft
Froude Number	2.35	
Flow is supercritical.		

Alignment #4, Exist 40"x28" CMPA @ 1.01%
Worksheet for Circular Channel

Project Description	
Project File	c:\job files\intec\interim action ph. 1\tf inter.fm2
Worksheet	Alignment #4, Exist 40"x28" CMPA @ 1.01%
Flow Element	Circular Channel
Method	Manning's Formula
Solve For	Discharge

Input Data		
Mannings Coefficient	0.024	
Channel Slope	0.010100	ft/ft
Depth	3.00	ft
Diameter	36.00	in

Results		
Discharge	36.31	cfs
Flow Area	7.07	ft^2
Wetted Perimeter	9.42	ft
Top Width	0.73e-7	ft
Critical Depth	1.96	ft
Percent Full	100.00	
Critical Slope	0.017409	ft/ft
Velocity	5.14	ft/s
Velocity Head	0.41	ft
Specific Energy	3.41	ft
Froude Number	0.92e-4	
Maximum Discharge	39.06	cfs
Full Flow Capacity	36.31	cfs
Full Flow Slope	0.010100	ft/ft
Flow is subcritical.		

Alignment 5

Alignment #5, Type 1 Ditch @ 1.19%
Worksheet for Triangular Channel

Project Description	
Project File	c:\job files\intec\interim action ph. 1\tf inter.fm2
Worksheet	Alignment #5, Type 1 Ditch @ 1.19%
Flow Element	Triangular Channel
Method	Manning's Formula
Solve For	Discharge

Input Data		
Mannings Coefficient	0.013	
Channel Slope	0.011900	ft/ft
Depth	0.50	ft
Left Side Slope	5.000000	H : V
Right Side Slope	5.000000	H : V

Results		
Discharge	6.10	cfs
Flow Area	1.25	ft^2
Wetted Perimeter	5.10	ft
Top Width	5.00	ft
Critical Depth	0.62	ft
Critical Slope	0.003732	ft/ft
Velocity	4.88	ft/s
Velocity Head	0.37	ft
Specific Energy	0.87	ft
Froude Number	1.72	
Flow is supercritical.		

Alignment #5, Type 1 Ditch @ 7.02%
Worksheet for Triangular Channel

Project Description	
Project File	c:\job files\intec\interim action ph. 1\tf inter.fm2
Worksheet	Alignment #5, Type 1 Ditch @ 7.02%
Flow Element	Triangular Channel
Method	Manning's Formula
Solve For	Discharge

Input Data		
Mannings Coefficient	0.013	
Channel Slope	0.070200	ft/ft
Depth	0.50	ft
Left Side Slope	5.000000	H : V
Right Side Slope	5.000000	H : V

Results		
Discharge	14.83	cfs
Flow Area	1.25	ft^2
Wetted Perimeter	5.10	ft
Top Width	5.00	ft
Critical Depth	0.89	ft
Critical Slope	0.003316	ft/ft
Velocity	11.86	ft/s
Velocity Head	2.19	ft
Specific Energy	2.69	ft
Froude Number	4.18	
Flow is supercritical.		

Alignment #5, Existing 18" CMP @ 1.28%
Worksheet for Circular Channel

Project Description	
Project File	c:\job files\intec\interim action ph. 1\tf inter.fm2
Worksheet	Alignment #5, Existing 18" CMP @ 1.28%
Flow Element	Circular Channel
Method	Manning's Formula
Solve For	Discharge

Input Data		
Mannings Coefficient	0.024	
Channel Slope	0.012800	ft/ft
Depth	1.50	ft
Diameter	18.00	in

Results		
Discharge	6.44	cfs
Flow Area	1.77	ft^2
Wetted Perimeter	4.71	ft
Top Width	0.37e-7	ft
Critical Depth	0.98	ft
Percent Full	100.00	
Critical Slope	0.021969	ft/ft
Velocity	3.64	ft/s
Velocity Head	0.21	ft
Specific Energy	1.71	ft
Froude Number	0.92e-4	
Maximum Discharge	6.92	cfs
Full Flow Capacity	6.44	cfs
Full Flow Slope	0.012800	ft/ft
Flow is subcritical.		

Alignment #5, Type 3 Ditch @ 7.23%
Worksheet for Trapezoidal Channel

Project Description	
Project File	c:\job files\intec\interim action ph. 1\tf inter.fm2
Worksheet	Alignment #5, Type 3 Ditch @ 7.23%
Flow Element	Trapezoidal Channel
Method	Manning's Formula
Solve For	Discharge

Input Data		
Mannings Coefficient	0.013	
Channel Slope	0.072300	ft/ft
Depth	1.50	ft
Left Side Slope	2.000000	H : V
Right Side Slope	2.000000	H : V
Bottom Width	1.50	ft

Results		
Discharge	182.09	cfs
Flow Area	6.75	ft^2
Wetted Perimeter	8.21	ft
Top Width	7.50	ft
Critical Depth	3.14	ft
Critical Slope	0.002342	ft/ft
Velocity	26.98	ft/s
Velocity Head	11.31	ft
Specific Energy	12.81	ft
Froude Number	5.01	
Flow is supercritical.		

Alignment 6

Alignment #6, Type 1 Ditch @ 0.53%
Worksheet for Triangular Channel

Project Description	
Project File	c:\job files\intec\interim action ph. 1\tf inter.fm2
Worksheet	Alignment #6, Type 1 Ditch @ 0.53%
Flow Element	Triangular Channel
Method	Manning's Formula
Solve For	Discharge

Input Data		
Mannings Coefficient	0.013	
Channel Slope	0.005300	ft/ft
Depth	0.50	ft
Left Side Slope	5.000000	H : V
Right Side Slope	5.000000	H : V

Results		
Discharge	4.07	cfs
Flow Area	1.25	ft^2
Wetted Perimeter	5.10	ft
Top Width	5.00	ft
Critical Depth	0.53	ft
Critical Slope	0.003939	ft/ft
Velocity	3.26	ft/s
Velocity Head	0.17	ft
Specific Energy	0.67	ft
Froude Number	1.15	
Flow is supercritical.		

Alignment #6, Type 1 Ditch @ 0.83%
Worksheet for Triangular Channel

Project Description	
Project File	c:\job files\intec\interim action ph. 1\tf inter.fm2
Worksheet	Alignment #6, Type 1 Ditch @ 0.83%
Flow Element	Triangular Channel
Method	Manning's Formula
Solve For	Discharge

Input Data		
Mannings Coefficient	0.013	
Channel Slope	0.008300	ft/ft
Depth	0.50	ft
Left Side Slope	5.000000	H : V
Right Side Slope	5.000000	H : V

Results		
Discharge	5.10	cfs
Flow Area	1.25	ft^2
Wetted Perimeter	5.10	ft
Top Width	5.00	ft
Critical Depth	0.58	ft
Critical Slope	0.003823	ft/ft
Velocity	4.08	ft/s
Velocity Head	0.26	ft
Specific Energy	0.76	ft
Froude Number	1.44	
Flow is supercritical.		

Alignment #6, Type 1 Ditch @ 0.68%
Worksheet for Triangular Channel

Project Description	
Project File	c:\job files\intec\interim action ph. 1\tf inter.fm2
Worksheet	Alignment #6, Type 1 Ditch @ 0.68%
Flow Element	Triangular Channel
Method	Manning's Formula
Solve For	Discharge

Input Data		
Mannings Coefficient	0.013	
Channel Slope	0.006800	ft/ft
Depth	0.50	ft
Left Side Slope	5.000000	H : V
Right Side Slope	5.000000	H : V

Results		
Discharge	4.61	cfs
Flow Area	1.25	ft^2
Wetted Perimeter	5.10	ft
Top Width	5.00	ft
Critical Depth	0.56	ft
Critical Slope	0.003874	ft/ft
Velocity	3.69	ft/s
Velocity Head	0.21	ft
Specific Energy	0.71	ft
Froude Number	1.30	
Flow is supercritical.		

Alignment #6, 18" CMP @ 0.5%
Worksheet for Circular Channel

Project Description	
Project File	c:\job files\intec\interim action ph. 1\tf inter.fm2
Worksheet	Alignment #6, 18" CMP @ 0.5%
Flow Element	Circular Channel
Method	Manning's Formula
Solve For	Discharge

Input Data		
Mannings Coefficient	0.024	
Channel Slope	0.005000	ft/ft
Depth	1.50	ft
Diameter	18.00	in

Results		
Discharge	4.02	cfs
Flow Area	1.77	ft^2
Wetted Perimeter	4.71	ft
Top Width	0.37e-7	ft
Critical Depth	0.77	ft
Percent Full	100.00	
Critical Slope	0.018473	ft/ft
Velocity	2.28	ft/s
Velocity Head	0.08	ft
Specific Energy	1.58	ft
Froude Number	0.58e-4	
Maximum Discharge	4.33	cfs
Full Flow Capacity	4.02	cfs
Full Flow Slope	0.005000	ft/ft
Flow is subcritical.		

Alignment 7

Alignment #7, Type 1 Ditch @ 0.2%
Worksheet for Triangular Channel

Project Description	
Project File	c:\job files\intec\interim action ph. 1\tf inter.fm2
Worksheet	Alignment #7, Type 1 Ditch @ 0.2%
Flow Element	Triangular Channel
Method	Manning's Formula
Solve For	Discharge

Input Data		
Mannings Coefficient	0.013	
Channel Slope	0.002000	ft/ft
Depth	0.50	ft
Left Side Slope	5.000000	H : V
Right Side Slope	5.000000	H : V

Results		
Discharge	2.50	cfs
Flow Area	1.25	ft^2
Wetted Perimeter	5.10	ft
Top Width	5.00	ft
Critical Depth	0.43	ft
Critical Slope	0.004203	ft/ft
Velocity	2.00	ft/s
Velocity Head	0.06	ft
Specific Energy	0.56	ft
Froude Number	0.71	
Flow is subcritical.		

Alignment 8

Alignment #8, Type 3 Ditch @ 2.68%
Worksheet for Trapezoidal Channel

Project Description	
Project File	c:\job files\intec\interim action ph. 1\tf inter.fm2
Worksheet	Alignment #8, Type 3 Ditch @ 2.68%
Flow Element	Trapezoidal Channel
Method	Manning's Formula
Solve For	Discharge

Input Data		
Mannings Coefficient	0.013	
Channel Slope	0.026800	ft/ft
Depth	1.50	ft
Left Side Slope	2.000000	H : V
Right Side Slope	2.000000	H : V
Bottom Width	1.50	ft

Results		
Discharge	110.86	cfs
Flow Area	6.75	ft^2
Wetted Perimeter	8.21	ft
Top Width	7.50	ft
Critical Depth	2.51	ft
Critical Slope	0.002496	ft/ft
Velocity	16.42	ft/s
Velocity Head	4.19	ft
Specific Energy	5.69	ft
Froude Number	3.05	
Flow is supercritical.		

Alignment #8, Exist 42"x30" CMPA @ 0.82%
Worksheet for Circular Channel

Project Description	
Project File	c:\job files\intec\interim action ph. 1\tf inter.fm2
Worksheet	Alignment #8, Exist 42"x30" CMPA @ 0.82%
Flow Element	Circular Channel
Method	Manning's Formula
Solve For	Discharge

Input Data		
Mannings Coefficient	0.024	
Channel Slope	0.008200	ft/ft
Depth	3.00	ft
Diameter	36.00	in

Results		
Discharge	32.71	cfs
Flow Area	7.07	ft^2
Wetted Perimeter	9.42	ft
Top Width	0.73e-7	ft
Critical Depth	1.86	ft
Percent Full	100.00	
Critical Slope	0.016546	ft/ft
Velocity	4.63	ft/s
Velocity Head	0.33	ft
Specific Energy	3.33	ft
Froude Number	0.83e-4	
Maximum Discharge	35.19	cfs
Full Flow Capacity	32.71	cfs
Full Flow Slope	0.008200	ft/ft
Flow is subcritical.		

Alignment #8, Type 3 Ditch @ 0.20%
Worksheet for Trapezoidal Channel

Project Description	
Project File	c:\job files\intec\interim action ph. 1\tf inter.fm2
Worksheet	Alignment #8, Type 3 Ditch @ 0.20%
Flow Element	Trapezoidal Channel
Method	Manning's Formula
Solve For	Discharge

Input Data		
Mannings Coefficient	0.013	
Channel Slope	0.002000	ft/ft
Depth	1.50	ft
Left Side Slope	2.000000	H : V
Right Side Slope	2.000000	H : V
Bottom Width	1.50	ft

Results		
Discharge	30.29	cfs
Flow Area	6.75	ft^2
Wetted Perimeter	8.21	ft
Top Width	7.50	ft
Critical Depth	1.38	ft
Critical Slope	0.002944	ft/ft
Velocity	4.49	ft/s
Velocity Head	0.31	ft
Specific Energy	1.81	ft
Froude Number	0.83	
Flow is subcritical.		

Alignment #8, 52"x32" CMPA @ 0.40%
Worksheet for Circular Channel

Project Description	
Project File	c:\job files\intec\interim action ph. 1\tf inter.fm2
Worksheet	Alignment #8, 52"x32" CMPA @ 0.40%
Flow Element	Circular Channel
Method	Manning's Formula
Solve For	Discharge

Input Data		
Mannings Coefficient	0.024	
Channel Slope	0.004000	ft/ft
Depth	3.67	ft
Diameter	44.00	in

Results		
Discharge	39.02	cfs
Flow Area	10.56	ft^2
Wetted Perimeter	11.52	ft
Top Width	0.00	ft
Critical Depth	1.91	ft
Percent Full	100.00	
Critical Slope	0.013842	ft/ft
Velocity	3.70	ft/s
Velocity Head	0.21	ft
Specific Energy	FULL	ft
Froude Number	FULL	
Maximum Discharge	41.97	cfs
Full Flow Capacity	39.02	cfs
Full Flow Slope	0.004000	ft/ft

Alignment #8, Exist 52"x32" CMPA @ 1.99%
Worksheet for Circular Channel

Project Description	
Project File	c:\job files\intec\interim action ph. 1\tf inter.fm2
Worksheet	Alignment #8, Exist 52"x32" CMPA @ 1.99%
Flow Element	Circular Channel
Method	Manning's Formula
Solve For	Discharge

Input Data		
Mannings Coefficient	0.024	
Channel Slope	0.019900	ft/ft
Depth	3.67	ft
Diameter	44.00	in

Results		
Discharge	87.03	cfs
Flow Area	10.56	ft^2
Wetted Perimeter	11.52	ft
Top Width	0.00	ft
Critical Depth	2.88	ft
Percent Full	100.00	
Critical Slope	0.021551	ft/ft
Velocity	8.24	ft/s
Velocity Head	1.06	ft
Specific Energy	FULL	ft
Froude Number	FULL	
Maximum Discharge	93.61	cfs
Full Flow Capacity	87.03	cfs
Full Flow Slope	0.019900	ft/ft

Alignment #8, Exist 58"x36" CMPA @ 0.46%
Worksheet for Circular Channel

Project Description	
Project File	c:\job files\intec\interim action ph. 1\tf inter.fm2
Worksheet	Alignment #8, Exist 58"x36" CMPA @ 0.46%
Flow Element	Circular Channel
Method	Manning's Formula
Solve For	Discharge

Input Data		
Mannings Coefficient	0.024	
Channel Slope	0.004600	ft/ft
Depth	4.00	ft
Diameter	48.00	in

Results		
Discharge	52.77	cfs
Flow Area	12.57	ft^2
Wetted Perimeter	12.57	ft
Top Width	0.12e-6	ft
Critical Depth	2.18	ft
Percent Full	100.00	
Critical Slope	0.013763	ft/ft
Velocity	4.20	ft/s
Velocity Head	0.27	ft
Specific Energy	4.27	ft
Froude Number	0.72e-4	
Maximum Discharge	56.76	cfs
Full Flow Capacity	52.77	cfs
Full Flow Slope	0.004600	ft/ft
Flow is subcritical.		

Alignment #8, 48" CMP @ 0.50%
Worksheet for Circular Channel

Project Description	
Project File	c:\job files\intec\interim action ph. 1\tf inter.fm2
Worksheet	Alignment #8, 48" CMP @ 0.50%
Flow Element	Circular Channel
Method	Manning's Formula
Solve For	Discharge

Input Data		
Mannings Coefficient	0.024	
Channel Slope	0.005000	ft/ft
Depth	4.00	ft
Diameter	48.00	in

Results		
Discharge	55.01	cfs
Flow Area	12.57	ft^2
Wetted Perimeter	12.57	ft
Top Width	0.12e-6	ft
Critical Depth	2.23	ft
Percent Full	100.00	
Critical Slope	0.013940	ft/ft
Velocity	4.38	ft/s
Velocity Head	0.30	ft
Specific Energy	4.30	ft
Froude Number	0.75e-4	
Maximum Discharge	59.18	cfs
Full Flow Capacity	55.01	cfs
Full Flow Slope	0.005000	ft/ft
Flow is subcritical.		

Appendix B

Engineering Design File

Olive Avenue Storm Water Lift Station at INTEC

Document ID : EDF-1379

Revision : 0

ENGINEERING DESIGN FILE

SUBCONTRACT NO. **S00-588051**

PROJECT FILE NO. **020978**

OU 3-13 Group 1 Tank Farm Interim Action Phase 1 and 2

OLIVE AVENUE STORM WATER LIFT STATION AT INTEC

INEEL

Idaho National Engineering & Environmental Laboratory

BECHTEL BWXT IDAHO, LLC

Form 412.14
10/05/99
Rev. 02

ENGINEERING DESIGN FILE

PROJECT FILE NO.	020978
EDF SERIAL NO.	EDF-1379
FUNCTIONAL FILE NO.	N/A

PROJECT/TASK OU 3-13 Group 1 - Tank Farm Interim Action Phase 1 & 2

SUBTASK Lift Station

EDF PAGE NO. 1 OF 24

TITLE OLIVE AVENUE STORM WATER LIFT STATION AT INTEC

SUMMARY

The Waste Area Group 3, Operable Unit 3-13 Record of Decision (ROD) for the Group 1 - Tank Farm Interim Action requires installation of engineering controls to reduce water infiltrating into the contaminated tank farm soils. This Interim Action includes upgrading the existing storm water runoff collection system in the tank farm including a 150-ft drainage control zone around the tank farm and constructing a lined evaporation pond where storm water runoff from the INTEC facility will be collected. The ROD requires the storm water collection system to accommodate a 25-year 24-hour storm event.

This EDF summary is for the design of the storm water lift station to be located at the intersection of Olive Avenue and Beech Street inside INTEC. This area forms a low spot, and pumping is required to prevent flooding. The maximum design flow determined for the 25-yr storm event is 1230 gpm. Normal operating conditions will be flow from the 2-yr storm determined to be 603 gpm. The pumps are sized for one pump operation under normal conditions (2-yr storm event) with both pumps operating simultaneously during maximum design flows (25-yr event). The length of pressure pipe is approximately 400 ft with a head loss of 17 feet.

The floor of the lift station was set at elevation 4899.5 to allow for storage and depth required for an existing storm drain line to be connected to the lift station. The depth of the existing drain line had to be maintained because of the utility tunnel running east to west down Olive Avenue. The existing storm drain flows into a drywell that will be filled with concrete. The drywell will now function as a catch basin. Based on this information, the overall depth of the lift station will be 15.8 feet deep with a 10 ft diameter precast concrete structure, see attachments.

Thrust blocks were analyzed for the discharge piping using EBAA Iron Inc. restrained length calculation program. The analysis indicated that thrust blocks were not required provided mechanically restrained joints were used at bends and within five lineal feet of bends. EBAA data analysis sheets are attached to this EDF.

QUALITY LEVEL ☐ 1 ☐ 2 ☒ 3

KEYWORDS (e.g. area, structure no., general subject matter, etc.) : Lift Station, Force Main, Olive Avenue, Storm Water

AUTHOR

PROFESSIONAL ENGINEER REGISTERED 9404 9/18/00 STATE OF IDAHO KURT D. FRITZ

DISTRIBUTION (COMPLETE PACKAGE):

DISTRIBUTION (COVER SHEET ONLY):

CHECKED	DATE	APPROVED/ACCEPTED	DATE
C. Kingsford C. O. Kingsford, P.E. by S Austed	9/18/00	S. A. Davies, P.E.	9/18/00
BBWI Review	DATE	BBWI Review	DATE

SUMMARY (Continued)

References:

1. Wastewater Pump Catalogs and H20 Optimize 99 software by Hydromatic Pumps.
2. Engineering Design File Sewage Lift Station Required at TRA, Clint Kingsford, EDF-346, 1995.
3. Pipe-Flo Engineering Software, Version 6.08, Engineered Software, Inc., Lacey, WA, 1997.
4. Highway Drainage Guidlines, Storm Drainage Systems, Dan Ghere et al., 1987.
5. DOE-ID, 1999, *Final Record of Decision for the Idaho Nuclear Technology and Engineering Center, OU3-13 at the Idaho National Engineering Laboratory*, USDOE-ID, USEPA, IDHW, DOE-ID-10660, October.
6. EBAA Iron Inc. Restrained Length Calculation Program, Version 3.1, Eastland, TX.

Conclusions:

The piping system was analyzed using both hand calculations and Pipe-Flo software. The hand calculations were performed to check the analysis of Pipe-Flo, however, the software lended better results as the dual pump system operation was able to be analyzed. Using Pipe -Flo, the systems resistance curve was developed for proper pump selection and sizing.

In summary, a 10 ft diameter wet well 15.8 feet deep is recommended with two 7.5 hp submersible pumps. An 8" diameter force main will be required in order to limit the head loss in the pipeline and keep velocities to acceptable levels. Calculation and data sheets are attached.

DESIGN VOLUME: 1230 gpm = Q_{in} (25-yr STORM)
603 gpm = Q_{in} (2-yr STORM)

ASSUME: CONTINUOUS OPERATION AT PEAK FLOW PUMP

WET WELL SIZE:

PIPE OUT ELEVATION: 4907
LOW LEVEL PROBE: 4901.
6 ft of STORAGE

WET WELL AVAILABLE IN 8', 10', AND 12' DIAMETER

ASSUME 8' ϕ:

$V = \pi r^2 h = \pi(4)^2(6) = 301.6\ ft^3 \rightarrow 2256$ gal

10' ϕ:

$V = \pi(5)^2(6) = 471\ ft^3 \rightarrow$ 3523 gal

12' $\phi \rightarrow 5075$ gal

NORMAL OPERATION WILL REQUIRE ONE PUMP. THE 25 YR STORM OCCURRENCE WILL REQUIRE BOTH PUMPS TO OPERATE. THE 2-YR STORM EVENT WAS CHOSEN AS A MEASURE OF A NORMAL PRECIPITATION EVENT.

VOL = 3523 gal

Cycle time $\frac{3523 \text{ gal}}{603 \text{ gal/min}} = 5.84$ min

13-782 500 SHEETS, FILLER 5 SQUARE
42-381 50 SHEETS EYE-EASE® 5 SQUARE
42-382 100 SHEETS EYE-EASE® 5 SQUARE
42-389 200 SHEETS EYE-EASE® 5 SQUARE
42-392 100 RECYCLED WHITE 5 SQUARE
42-399 200 RECYCLED WHITE 5 SQUARE
Made in U.S.A.
National® Brand

CHECK VELOCITY IN PIPE

PEAK FLOW → 1230 GPM (BOTH PUMPS ON)

4" ϕ Pipe; AREA = 0.087 ft^2

$$\text{FLOW} = \frac{1230\ gal/min}{448.8} = 2.74\ ft^3/sec$$

$$\text{VEL} = \frac{2.74\ ft^3/sec}{0.087\ ft^2} = 31.5\ ft/sec$$

6" ϕ Pipe; AREA = 0.196 ft^2

$$\text{VEL.} = \frac{2.74\ ft^3/sec}{0.196\ ft^2} = 13.95\ ft/sec \longleftarrow$$

8" ϕ Pipe; AREA = 0.349 ft^2

$$\text{VEL} = \frac{2.74\ ft^3/sec}{0.349\ ft^2} = 7.85\ ft/sec$$

NORMAL FLOW → 603 GPM (ONE PUMP OPERATION)

$$\text{FLOW} = \frac{603\ gal/min}{448.8} = 1.34\ ft^3/sec$$

4" ϕ Pipe; $\text{VEL} = \frac{1.34\ ft^3/sec}{0.087\ ft^2} = 15.4\ ft/sec$

6" ϕ Pipe; $\text{VEL} = \frac{1.34\ ft^3/sec}{0.196\ ft^2} = 6.86\ ft/sec \longleftarrow$

8" ϕ Pipe; $\text{VEL} = \frac{1.34\ ft^3/sec}{0.349\ ft^2} = 3.85\ ft/sec$

NORMAL OPERATION WILL CONSIST OF ONE PUMP OPERATING.

TRY 6" ϕ PIPE.

13-782 500 SHEETS, FILLER 5 SQUARE
42-381 50 SHEETS EYE-EASE® 5 SQUARE
42-382 100 SHEETS EYE-EASE® 5 SQUARE
42-389 200 SHEETS EYE-EASE® 5 SQUARE
42-392 100 RECYCLED WHITE 5 SQUARE
42-399 200 RECYCLED WHITE 5 SQUARE
National® Brand
Made in U.S.A.

TOTAL HEAD REQUIRED:

The total head required is based on pipe friction loss, minor losses, elevation from pump to outlet at discharge point.

STATIC HEAD

ELEV. @ DISCHARGE: 4913.0
ELEV. @ PUMP BOTTOM: 4900.25
12.75 ft ←

SINGLE PUMP OPERATION:

LOSSES IN PIPE (DARCY-WEISBACH)

$$h_f = f\frac{L}{D}\left(\frac{V^2}{2g}\right)$$

where $\varepsilon = 0.000005$ for new PVC

$$\frac{\varepsilon}{D} = \frac{.000005}{0.5} = 0.00001$$

$$R = \frac{VD}{\nu}$$

water @ 60°F
$\nu = 1.217 \times 10^{-5}$ ft²/sec

$$= \frac{(6.86\ \text{ft/sec})(0.5\ \text{ft})}{1.217 \times 10^{-5}\ \text{ft}^2/\text{sec}} = 2.8 \times 10^5$$

FROM MOODY DIAGRAM
$f = 0.015$ $L = 370$ ft

$$\therefore h_f = 0.015\frac{(370\ \text{ft})(6.86\ \text{ft/sec})^2}{0.5\ \text{ft}(2)(32.2\ \text{ft/sec}^2)} = 8.1\ \text{ft} \leftarrow$$

VELOCITY HEAD; $K\,V^2/2g$

SINGLE PUMP: $\frac{(6.86\ \text{ft/sec})^2 K}{2(32.2\ \text{ft/sec}^2)} = 0.73\ \text{ft} * K$

13-782 500 SHEETS, FILLER 5 SQUARE
42-381 50 SHEETS EYE-EASE® 5 SQUARE
42-382 100 SHEETS EYE-EASE® 5 SQUARE
42-389 200 SHEETS EYE-EASE® 5 SQUARE
42-392 100 RECYCLED WHITE 5 SQUARE
42-399 200 RECYCLED WHITE 5 SQUARE
Made in U.S.A.
National® Brand

MINOR LOSSES	No.	K VALUE	TOTAL
90° BEND	4	0.45	1.8
CHECK VALVE	1	1.5	1.5
WYE	1	0.5	0.5
45° BEND	6	0.24	1.44
22.5° BEND	2	0.20	0.4
SUDDEN ENLARGE	1	0.60	0.6
EXIT LOSS	1	0.50	0.5
			6.74

VELOCITY HEAD $h_L = 0.73\ ft\,(7) = 5.1\ ft$ ←

TOTAL HEAD = 12.75 + 8.1 + 5.1 = **26.0 ft**

DUAL PUMP OPERATION

LOSSES IN PIPE

$$R = \frac{VD}{\nu} = \frac{(13.95\ ft/sec)(0.5\ ft)}{1.217 \times 10^{-5}\ ft^2/sec} = 5.7 \times 10^5$$

FROM MOODY DIAGRAM:

$f = 0.013$ $L = 370\ ft$

$$\therefore h_f = \frac{0.013\,(370\ ft)(13.95\ ft/sec)^2}{0.5\ ft\,(2)(32.2\ ft/sec^2)} = 29.1\ ft$$ ←

VELOCITY HEAD

BOTH PUMPS: $\frac{(13.95\ ft/sec)^2}{2(32.2\ ft/sec^2)} = 3.02\ ft * K$

ADDITIONAL K COEFFICIENTS

MINOR LOSS	No.	K	TOTAL
90° BEND	2	0.45	0.9
CHECK VALVE	1	1.5	1.5
			2.4 + 6.7 = 9.1

$h_L = 3.02\ ft\,(9.1) = 27.5\ ft$ ←

TOTAL HEAD = 12.75 + 29.1 + 27.5 = **69.3 ft**

PUMP SELECTION

$$Whp = \frac{gpm \times H \times spgr}{3960} = \frac{(603)(27)(1)}{3960} = 4.11 \text{ hp}$$

ASSUME
EFF PUMP: 75%
EFF MOTOR: 80%

$$\frac{4.11}{(.75)(.8)} = 6.85 \text{ hp}$$

DUAL PUMP OPERATION

$$Whp = \frac{1230(69)(1)}{3960} = 21.4 \text{ hp}$$

$$\frac{21.4}{(.75)(.8)} = \underline{35.7 \text{ hp}} \quad \text{too large} \longleftarrow$$

TRY 8" ϕ PIPE

STATIC HEAD = 12.75 ft

VELOCITY HEAD;

SINGLE PUMP: $\frac{(3.85 \text{ ft/s})^2 K}{2(32.2)} = 0.23K = 6.74(.23) = \underline{1.55 \text{ ft}}$

DUAL PUMP: $\frac{(7.85)^2 K}{64.4} = 0.96 * K = 0.96(9.1) = \underline{8.7 \text{ ft}}$

LOSSES IN PIPE

SINGLE: $\frac{\varepsilon}{D} = \frac{.000005}{.67} = 7.5 \times 10^{-6}$

$$R = \frac{VD}{\nu} = \frac{(3.85)(.67)}{1.217 \times 10^{-5}} = 2.1 \times 10^{5}$$

FROM MOODY DIA:
$f = 0.0155$ $\qquad L = 370 \text{ ft}$

13-782 500 SHEETS, FILLER 5 SQUARE
42-381 50 SHEETS EYE-EASE® 5 SQUARE
42-382 100 SHEETS EYE-EASE® 5 SQUARE
42-389 200 SHEETS EYE-EASE® 5 SQUARE
42-392 100 RECYCLED WHITE 5 SQUARE
42-399 200 RECYCLED WHITE 5 SQUARE
Made in U.S.A.
National® Brand

$$\therefore h_f = \frac{0.0155(370)(3.85)^2}{.67(2)(32.2)} = 1.97 \text{ ft}$$

TOTAL HEAD = $12.75 + 1.55 + 1.97 = \underline{\underline{16.3 \text{ ft}}}$

DOUBLE PUMP

$$\frac{\varepsilon}{D} = 7.5 \times 10^{-6}$$

$$R = \frac{VD}{\nu} = \frac{(7.85)(.67)}{1.217 \times 10^{-5}} = 4.3 \times 10^{5}$$

FROM MOODY: $f = 0.014$

$$\therefore h_f = \frac{.014(370)(7.85)^2}{.67(2)(32.2)} = 7.4 \text{ ft}$$

TOTAL HEAD: $12.75 + 8.7 + 7.4 = \underline{\underline{28.8 \text{ ft}}}$

PUMP SELECTION

Single: $\frac{603(16.3)(1)}{3960} = \frac{2.48}{.75(.8)} = 4.1$ hp

Dual: $\frac{1230(28.8)(1)}{3960} = \frac{8.95}{.75(.8)} = 14.9$ hp

HAND CALCS DO NOT SUFFICIENTLY ANALYZE THE SYSTEM'S RESISTANCE UNDER DUAL PUMP OPERATION. THEREFORE, PIPE-FLO WILL BE USED TO DEVELOP THE SYSTEM'S RESISTANCE CURVE TO DEFINE THE TOTAL HEAD LOSS UNDER DUAL PUMP OPERATION.

WITH PIPE-FLO, AN ITERATIVE PROCESS WAS USED TO DETERMINE THE PROPER PUMP SELECTION.

IN SUMMARY, SINGLE PUMP OPERATION WOULD DELIVER APPROXIMATELY 1000 GPM @ 14' OF HEAD. DUAL PUMP OPERATION WILL DELIVER APPROX. 1355 GPM @ 17' OF HEAD USING TWO 5 H.P. PUMPS.

13-782 500 SHEETS, FILLER 5 SQUARE
42-381 50 SHEETS EYE-EASE® 5 SQUARE
42-382 100 SHEETS EYE-EASE® 5 SQUARE
42-389 200 SHEETS EYE-EASE® 5 SQUARE
42-392 100 RECYCLED WHITE 5 SQUARE
42-399 200 RECYCLED WHITE 5 SQUARE
Made in U.S.A.
National® Brand

OU3-13 Group 1
Olive Ave. Lift Station

PUMP-FLO ver: 6.04
02/25/00

9/24

PUMP DATA SHEET

HYDROMATIC

Selection file: KURT1230.UFS
Catalog: HYDRO60.MPC v 2

Curve: S6A870

n Point: Flow: 920 US gpm
Head: 14 ft

Pump: **NCLOG-6 - 900**
Speed: 870 rpm

Size: S6A/S6AX
Dia: 10.25 in

Limits: Temperature: 140 °F
Pressure: 125 psi_g

Sphere size: 3.75 in
Power: --- bhp

Specific Speed: Ns: ---
Nss: ---

Dimensions: Suction: --- in
Discharge: 6 in

Motor: 5 hp
Speed: 900
NEMA Standard
sized for Max Power on Design Curve

Frame: 254T
TEFC Enclosure

Fluid: Water
Temperature: 60 °F
SG: 1
Viscosity: 1.122 cP
Vapor pressure: 0.2568 psi_a
Atm pressure: 12.5 psi_a

NPSHa: --- ft

Piping:
System: FRITZ.PLL
Suction: --- in
Discharge: --- in

--- Data Point ---
Flow: 920 US gpm
Head: 13.8 ft
Eff: 76%
Power: 4.14 bhp
NPSHr: - ft

-- Design Curve --
Shutoff Head: 28.4 ft
Shutoff dP: 12.3 psi
Min Flow: 239 US gpm
BEP: 77% eff
@ 795 US gpm
NOL Pwr: 4.19 bhp
@ 864 US gpm

-- Max Curve --
Max Pwr: 7.11 bhp
@ 1112 US gpm

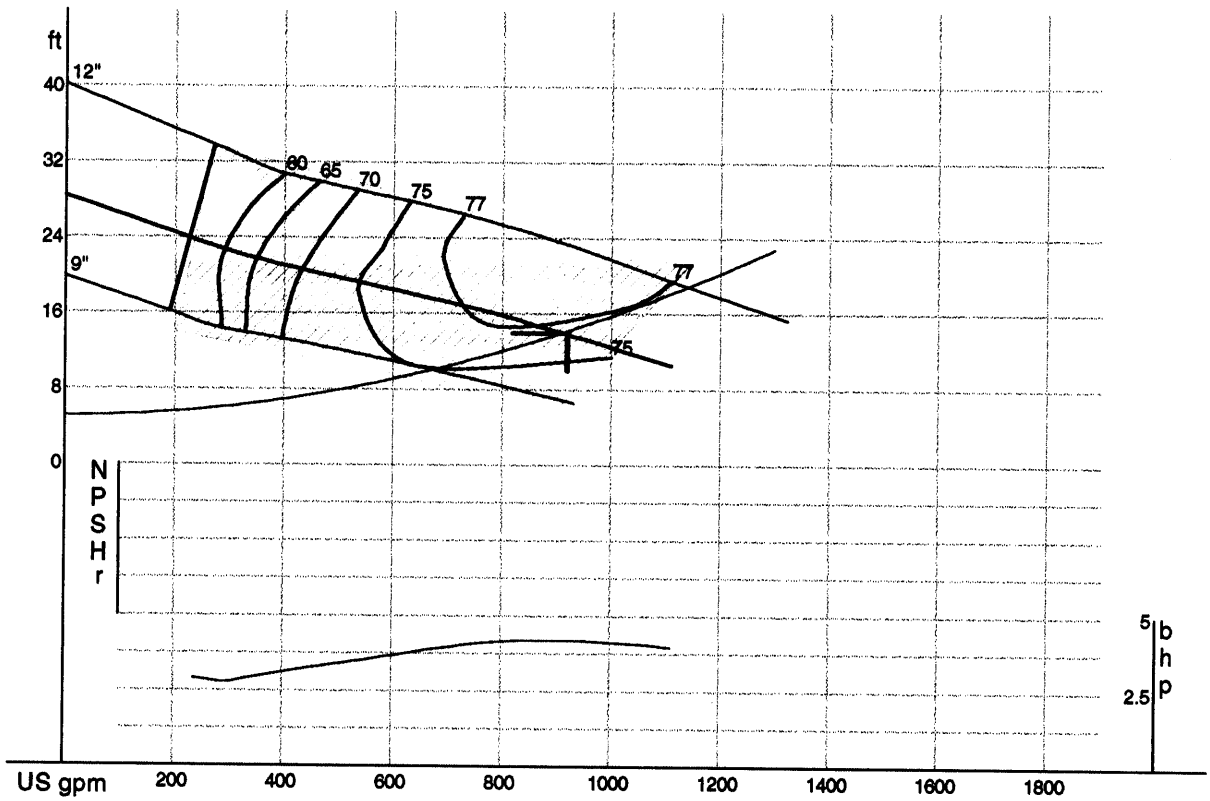

--- PERFORMANCE EVALUATION ---

Flow US gpm	Speed rpm	Head ft	Pump %eff	Power bhp	NPSHr ft	Motor %eff	Motor kW	Hrs/yr	Cost /kWh
1104	870	10.7	75	3.98	---				
920	870	13.8	76	4.14	---				
736	870	16.8	77	4.04	---				
552	870	19.1	75	3.54	---				
368	870	21.5	66	3.02	---				

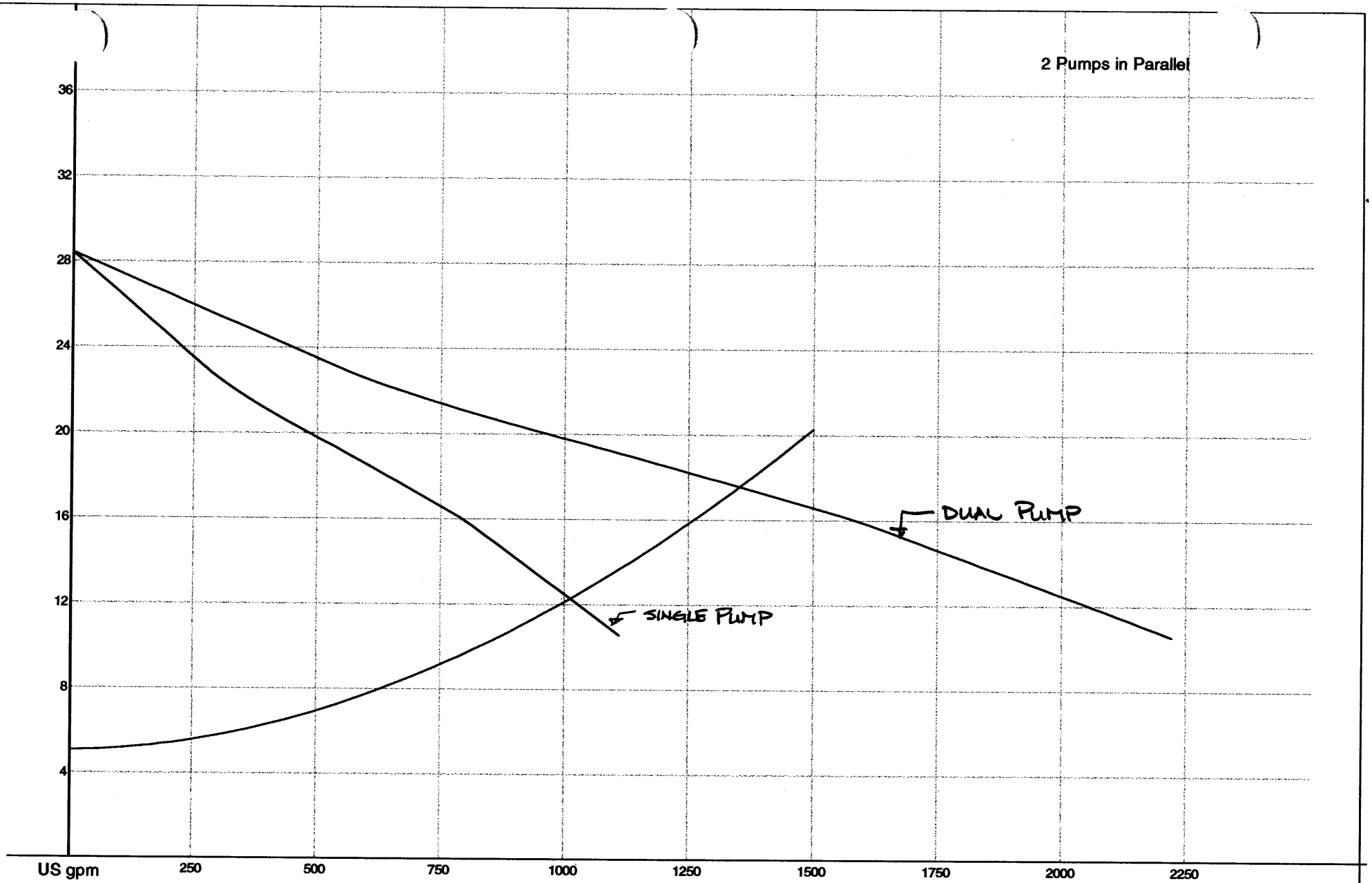

INEEL - INTEC Lift Station
Kurt Fritz - PE
03/07/00
Selection file: KURT1230.UFS

HYDROMATIC
Catalog: HYDRO60.MPC, vers 2
Curve: S6A870

NCLOG-6 - 900
Size: S6A/S6AX
Speed: 870 rpm
Impeller: 10.25 in

PUMP FLO

10/24

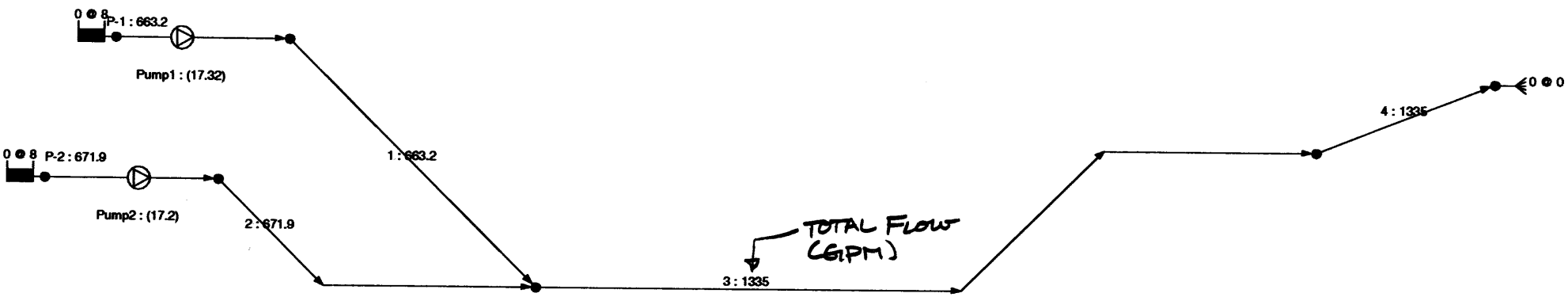

SYSTEM PERFORMANCE, DUAL PUMP OPERATION

Company:	INEEL	**System:**	FRITZ
Project:	OU3-13 Group 1	**Lineup:**	FRITZ
by:		**Nodes:**	Pressures
Comments:	Olive AVe. Lift Station	**flow rate:**	US gpm
		pressure:	psi$_g$
Version:	PIPE-FLO 6.08 03/07/00 2:19 pm	**level & grade:**	ft

Company: Bechtel BWXT Idaho, LCC
Project: OU3-13 Group 1
By: Kurt Fritz - PE

Created: 02/15/00 5:07 pm
Design file:
Pipe Specs: 2

PIPELIST REPORT

02/25/00 9:56 am
System: FRITZ
rev: 02/25/00 9:20 am

Pipes: 6
Nodes: 7
Pumps/Comps: 2

Lift Station

SPECIFICATIONS

SPECIFICATION	PIPE MATERIAL Sch / Roughness	FLUID Temp / Pres	VALVE TABLE	DESIGN LIMITS Vel / Pres
01 Ductile rev: 02/15/00 5:18 pm	Ductile Iron Sch 4 0.0102 in Size for: 10 ft/sec	Water 60 °F 0 psi g	Standard	0 / 12 ft/sec -12.243 / 50 psi g
02 PVC rev: 02/15/00 5:19 pm	PVC Sch 40 6e-005 in Size for: 10 ft/sec	Water 60 °F 0 psi g	Standard	0 / 12 ft/sec -12.243 / 50 psi g

12/24

PIPELINE	SPEC	MATERIAL Size / Sch	LENGTH ft	FLUID Temp / Pres	VALVES Total-K
1	02	PVC 8 in / 40	16.7	Water 60 °F / 0 psi g	2.236
2	02	PVC 8 in / 40	17.2	Water 60 °F / 0 psi g	1.597
3	02	PVC 8 in / 40	340	Water 60 °F / 0 psi g	1.516
4	02	PVC 12 in / 40	10	Water 60 °F / 0 psi g	2.816
P-1	01	Ductile Iron 6 in / 4	10	Water 60 °F / 0 psi g	1.338
P-2	01	Ductile Iron 6 in / 4	10	Water 60 °F / 0 psi g	1.338

Company: Bechtel BWXT Idaho, LCC
Project: OU3-13 Group 1
By: Kurt Fritz - PE

Created: 02/15/00 5:07 pm
Design file:
Pipe Specs: 2

SYSTEM REPORT

02/25/00 9:56 am
System: FRITZ
rev: 02/25/00 9:20 am

Pipes: 6
Nodes: 7
Pumps/Comps: 2

Lift Station

SYSTEM NODES

NODE	ELEVATION ft	PIPELINES IN	PIPELINES OUT
~N--001	4907.6	P-1	1
~N--002	4907.6	1 2	3
~N--003	4907.6	P-2	2
~N--004	4907.6	3	4
~N--005	4913	4	
~N--006	4900		P-1
~N--007	4900		P-2

14/24

PUMP COMP

PERFORMANCE DATA

Pump1

US gpm:	0	350	538	795	1111
ft:	28.4	21.8	19.3	16	10.6

eqn: 28.4 - 0.04479 Q ^ 0.8482

Selection: KURT1230 from Catalog: HYDRO60
Pump: NCLOG-6 S6A/S6AX at 870 rpm

Pump2

US gpm:	0	350	538	795	1111
ft:	28.4	21.8	19.3	16	10.6

eqn: 28.4 - 0.04479 Q ^ 0.8482

Selection: KURT1230 from Catalog: HYDRO60
Pump: NCLOG-6 S6A/S6AX at 870 rpm

15/24

Company: Bechtel BWXT Idaho, LCC
Project: OU3-13 Group 1
By: Kurt Fritz - PE

Created: 02/15/00 5:07 pm
Design file:
Pipe Specs: 2

MATERIALS REPORT

02/25/00 9:56 am
System: FRITZ
rev: 02/25/00 9:20 am

Pipes: 6
Nodes: 7
Pumps/Comps: 2

Lift Station

PIPE MATERIALS LIST

PIPELINE	SPEC	MATERIAL Size / Sch	LENGTH ft	VALVES & FITTINGS
1	02	PVC 8 in / 40	16.7	1-Tee Flow Thru Branch 1-Reducer Enlargement 5 X 8
2	02	PVC 8 in / 40	17.2	1-Elbow Short - r/d 1 @ 45° 1-Reducer Enlargement 5 X 8
3	02	PVC 8 in / 40	340	1-Tee Flow Thru Run 6-Elbow Short - r/d 1 @ 45°
4	02	PVC 12 in / 40	10	3-Elbow Short - r/d 1 @ 45° 1-Reducer Enlargement 8 X 12 1-Exit Projecting
P-1	01	Ductile Iron 6 in / 4	10	2-Elbow Short - r/d 1 @ 90° 1-Swing Check Vertical
P-2	01	Ductile Iron 6 in / 4	10	2-Elbow Short - r/d 1 @ 90° 1-Swing Check Vertical

19/24

PIPE MATERI SUMMARY

PIPE MATERIAL	SCHEDULE	SIZE	LENGTH
Ductile Iror	4	6 in	20 ft
PVC	40	8 in	373.9 ft
		12 in	10 ft

TOTAL SYSTEM VOLUME: 1061 gallons

VALVE & FITTING SUMMARY

SPECIFICATION	MATERIAL	SCHEDULE	VALVES & FITTINGS
01 Ductile	Ductile Iror	4	
	Size: 6 ir		4-Elbow Short - r/d 1 @ 90°
			2-Swing Check Vertical
02 PVC	PVC	40	
	Size: 8 ir		1-Tee Flow Thru Branch
			2-Reducer Enlargement 5 X 8
			7-Elbow Short - r/d 1 @ 45°
			1-Tee Flow Thru Run
	Size: 12 ir		3-Elbow Short - r/d 1 @ 45°
			1-Reducer Enlargement 8 X 12
			1-Exit Projecting

17/24

Olive Avenue Lift Station

Sub-Area	Total Area ft^2	Area Acres	Impervious ft^2	Impervious Acres	Pervious ft^2	Pervious Acres	Cimp	Cp	Cwt	C*A
A2 to LS										
B	70964	1.63	35482	0.81	35482	0.81	0.9	0.3	0.6	0.98
D	48611	1.12	36458.25	0.84	12152.75	0.28	0.9	0.3	0.75	0.84
	119575	**2.75**	**71940.25**	**1.65**	**47634.75**	**1.09**				**1.81**

	Tc (min)	I (in/hr)	A (acre)	CA	QT (cfs)	QT (gpm)
2-yr Storm	20	0.74	2.75	1.81	**1.34**	**602.59**
25-yr Storm	20	1.5	2.75	1.81	**2.72**	**1221.47**

Tc	Time of concentration (includes initial lag time of 10 minutes), Figure III
I	Rainfall intensity, see Figures I and I-A
Cimp	Runoff Coefficient, impervious
Cp	Runoff Coefficient, pervious
Cwt	Runoff Coefficient, weighted average
A	Catchment Area
QT	Total design PEAK flow (Q = CIA, rational formula)

FIGURE III

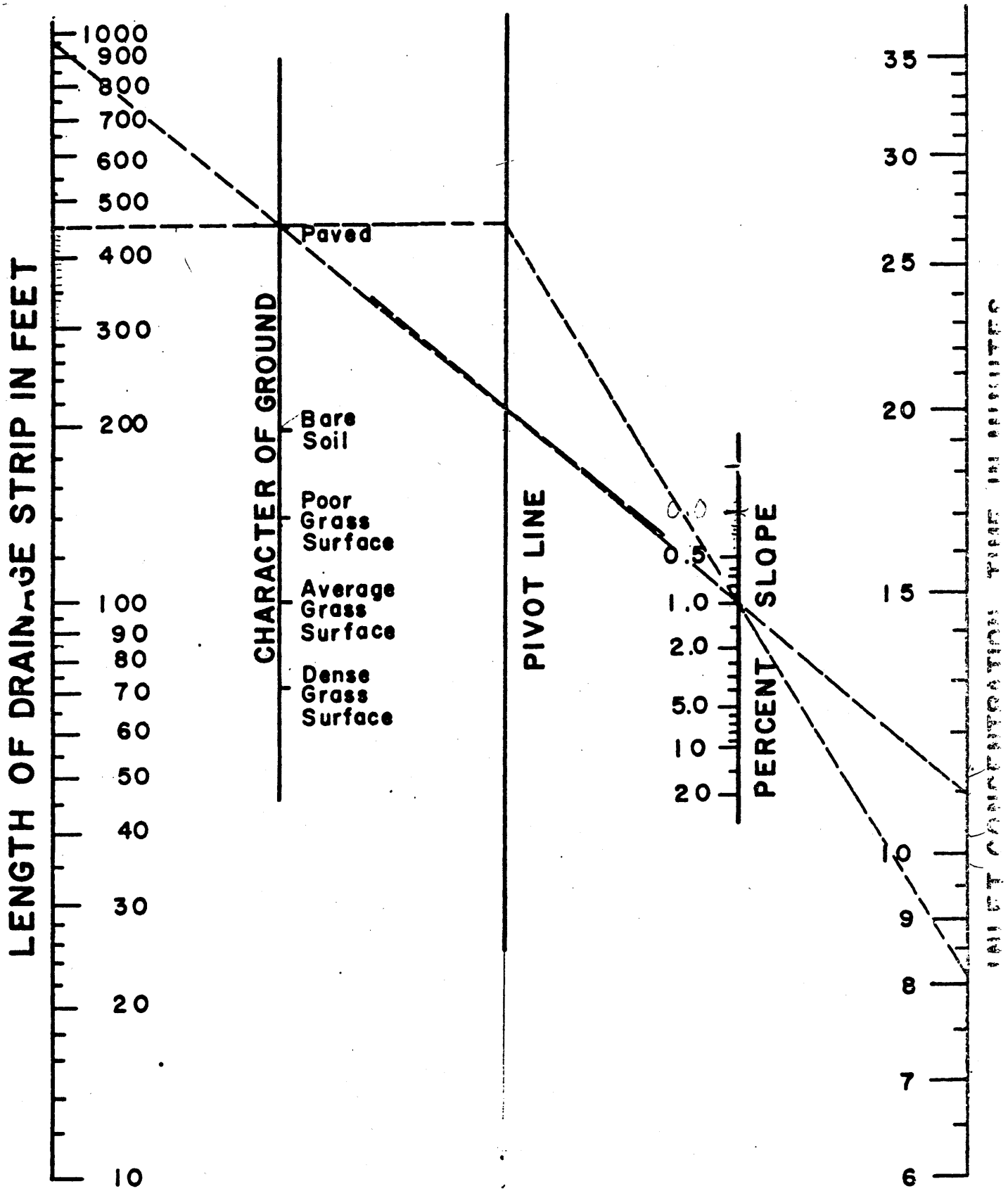

OVERLAND FLOW TIME

FIGURE I

STATE OF IDAHO
AREA CLASSIFICATION MAP

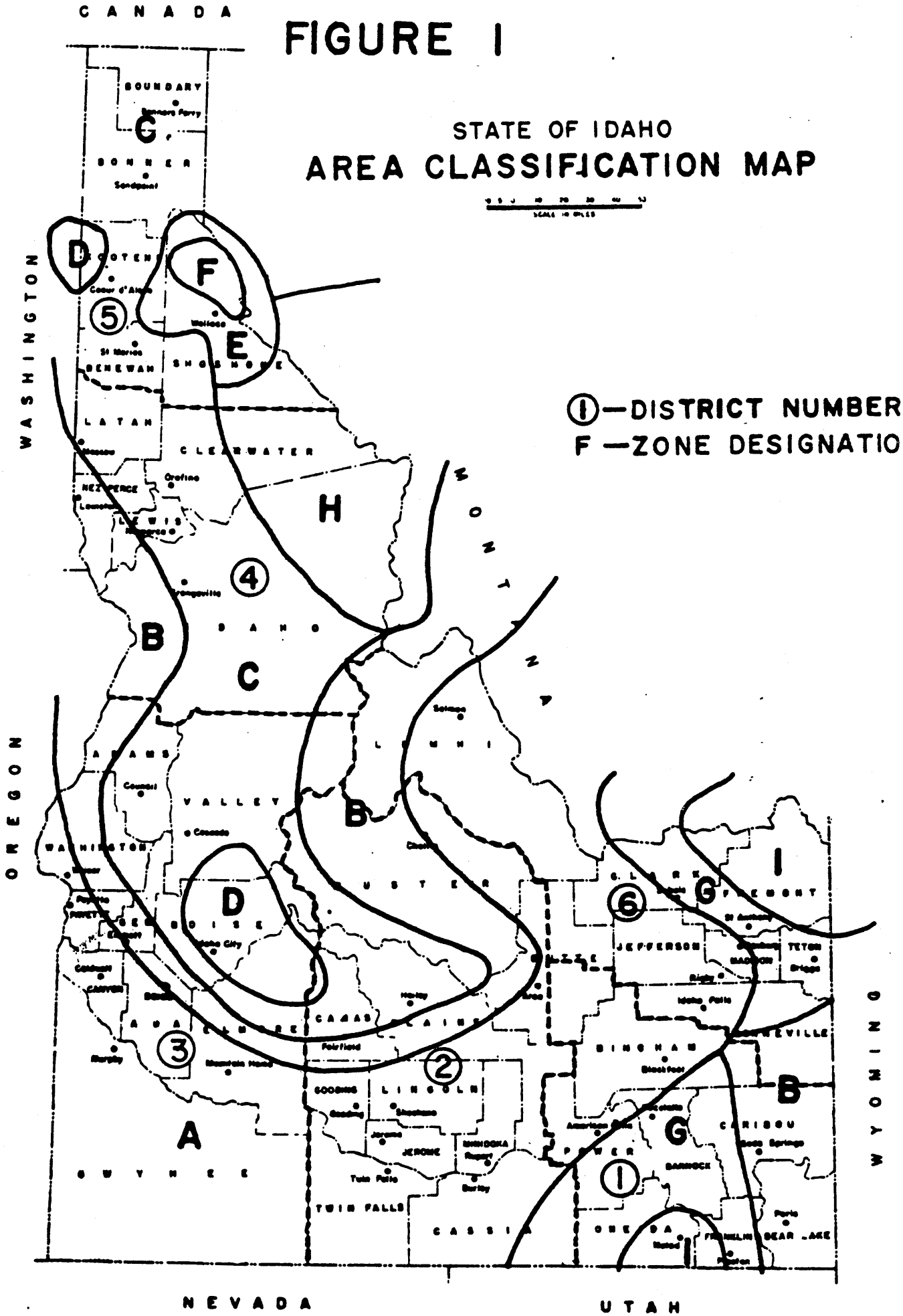

FIGURE I-A

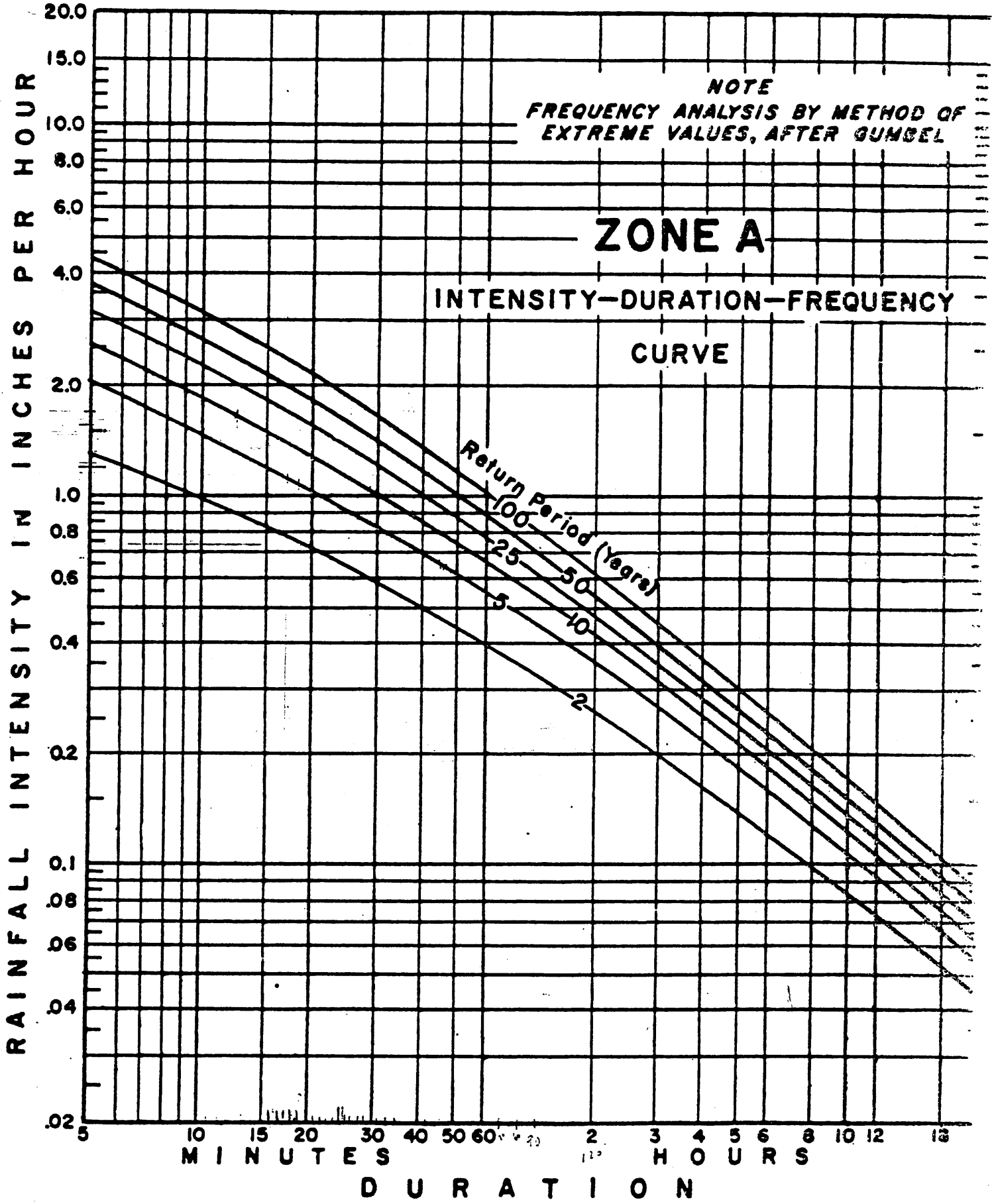
NOTE
FREQUENCY ANALYSIS BY METHOD OF EXTREME VALUES, AFTER GUMBEL
ZONE A
INTENSITY—DURATION—FREQUENCY
CURVE
Return Period (Years)
100
25
50
10
5
2
RAINFALL INTENSITY IN INCHES PER HOUR
20.0
15.0
10.0
8.0
6.0
4.0
2.0
1.0
0.8
0.6
0.4
0.2
0.1
.08
.06
.04
.02
5
10
15
20
30
40
50
60
2
3
4
5
6
8
10
12
18
MINUTES
HOURS
DURATION

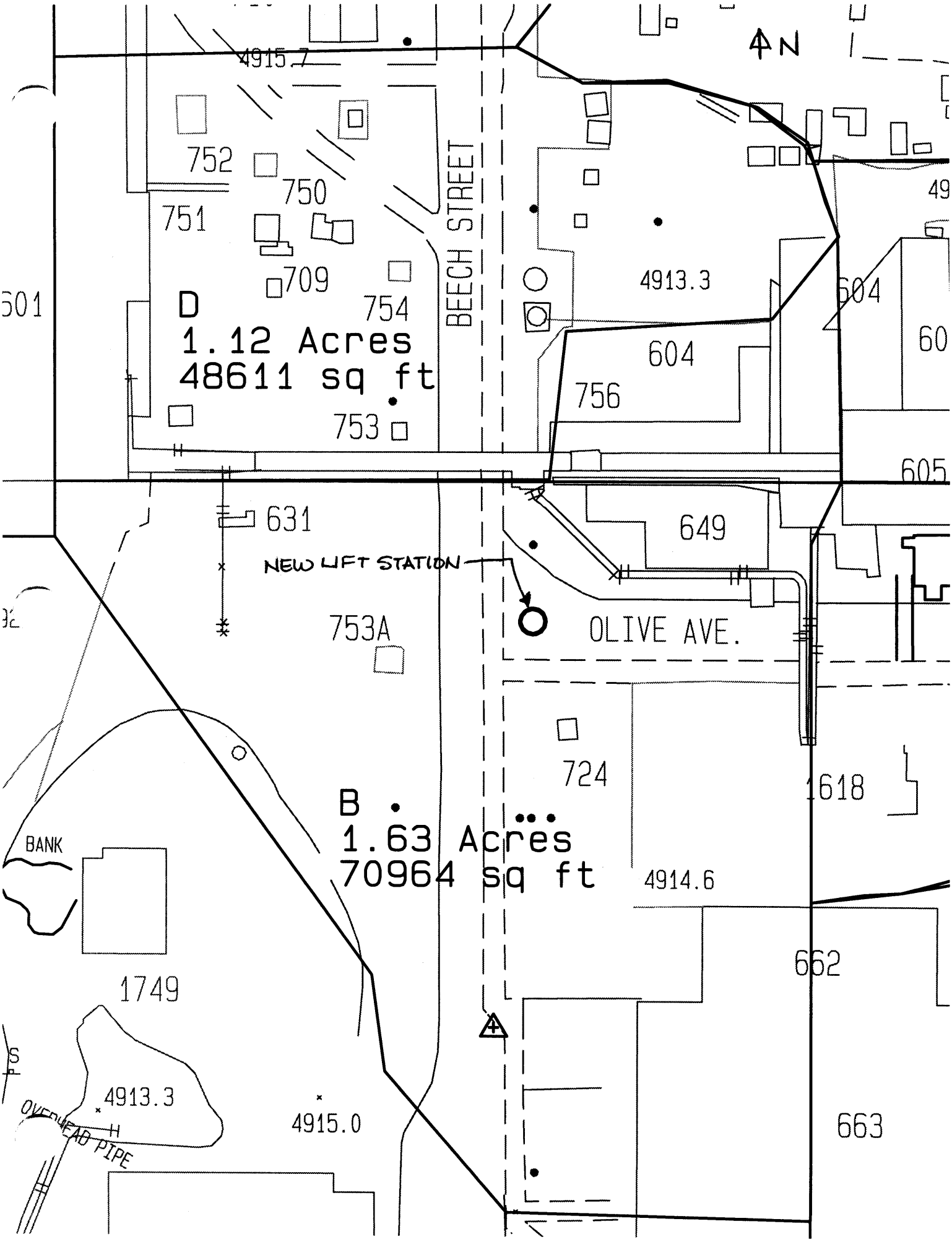
N
4915.7
752
750
751
709
754
753
BEECH STREET
4913.3
604
756
605
631
649
NEW LIFT STATION
753A
OLIVE AVE.
724
1618
D
1.12 Acres
48611 sq ft
B
1.63 Acres
70964 sq ft
BANK
4914.6
662
1749
4913.3
4915.0
663
OVERHEAD PIPE

REVISIONS		
REV	DESCRIPTION	EFFECTIVE DATE:

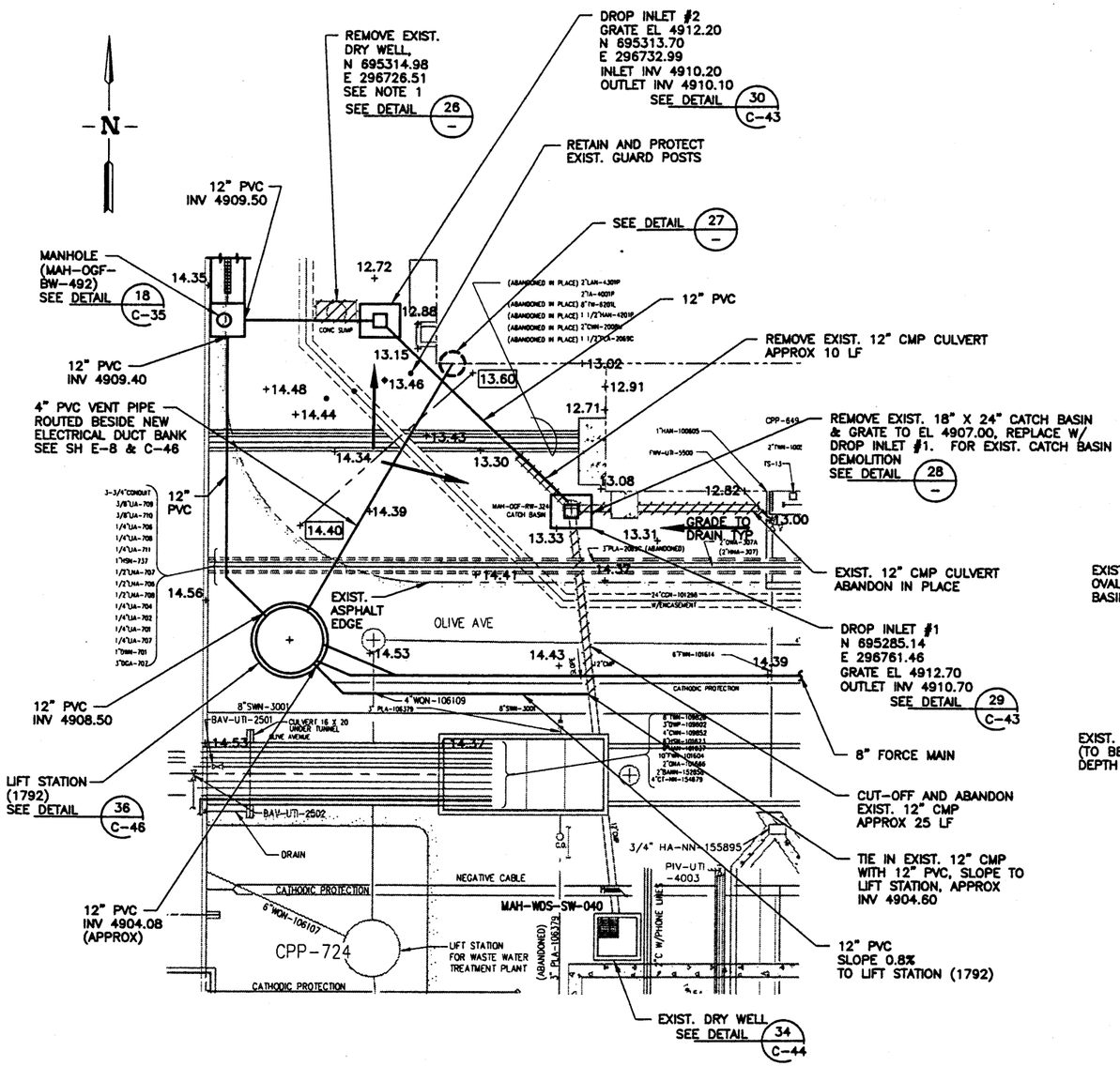

ENLARGED PLAN

SCALE: 1"=10.0' REF C-1 C-3

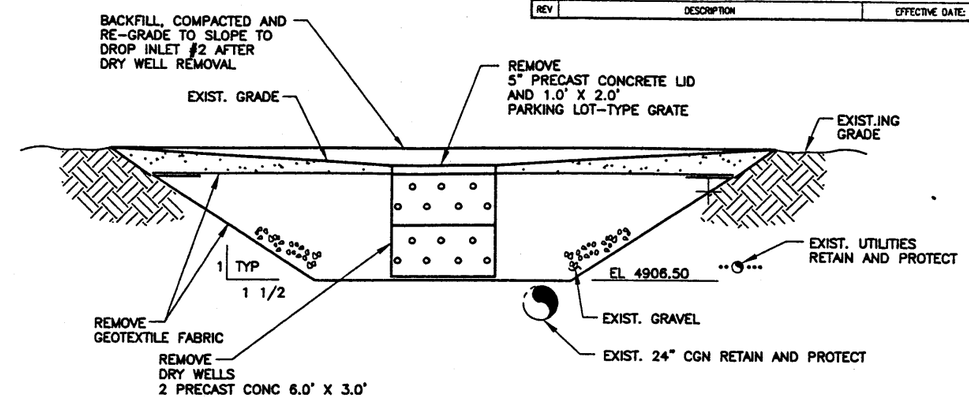

DETAIL 26

SEE NOTE 2
NTS

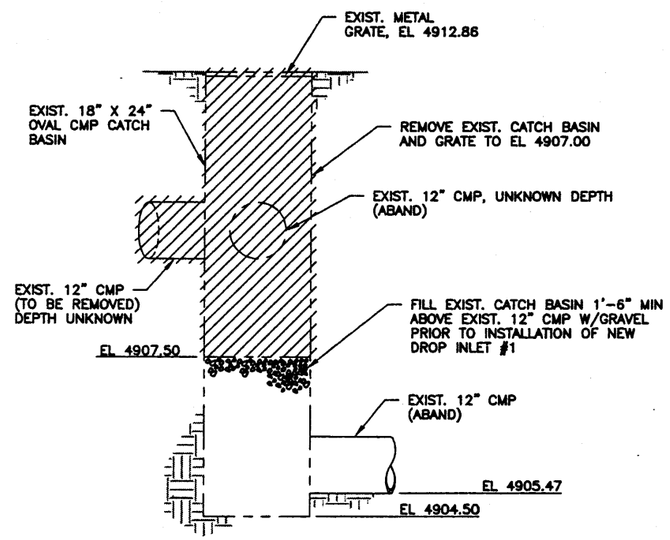

DETAIL 28

SCALE: 3/4"=1'-0"

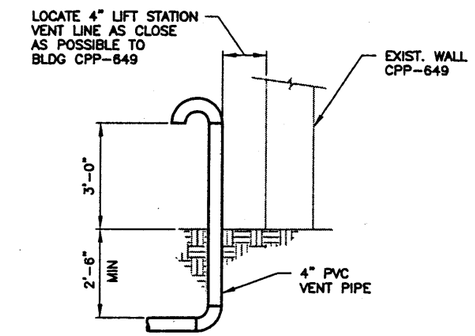

DETAIL 27

SCALE: 1/2"=1'-0" REF C-46

LEGEND

- REMOVE OR ABANDON IN PLACE

NOTES

1. RETAIN AND PROTECT ALL EXIST.ING FOOTINGS, SLABS AND OTHER STRUCTURES, INCLUDING EXIST.ING OVERHEAD 42" DIA DUCT WITH 12.0' CLEARANCE.
2. RETAIN AND PROTECT ALL UNDERGROUND UTILITIES.
3. ADD 4900 TO ALL ELEVATIONS POINTS SHOWN.

REVISION: 0
ORIGINAL SIGNED BY: KURT D. FRITZ
DATE ORIGINAL SIGNED: 9/18/2000
SEAL NUMBER: 9404
ORIGINAL STORED AT: EROB DOCUMENT CONTROL

PROFESSIONAL ENGINEER REGISTERED 9404 STATE OF IDAHO KURT D. FRITZ

FOR DRAWING INDEX SEE DRAWING NO. 515158	SUBCONTRACT NO. S00-588051	INEEL (Idaho National Engineering & Environmental Laboratory) BECHTEL BWXT IDAHO, LLC
SCALE: 1" = 10.0' / SCALE: 3/4" = 1'-0"	REQUESTER: M.S. KAPTEIN	INEEL OU 3-13 GROUP 1 TANK FARM INTERIM ACTION PHASE 1 & 2 ENLARGED PLAN AND DETAILS
	DESIGN: KURT FRITZ	
	DRAWN: ROB HERGESHEIMER	
	PROJECT NO. 020978	
	SPEC CODE	
DESIGN PHASE: AFC	FOR REVIEW/APPROVAL SIGNATURES SEE DAR NO. 68366	SIZE D / CAGE CODE / INDEX CODE NUMBER AREA 200 TYPE 0100 CL 65 ORIG 090 / DWG-515201 / REV
QUALITY LEVEL: 3	EFFECTIVE DATE: 9/18/2000	SCALE: NOTED / SHEET C-42

File: C-42.DWG ID: RDH5 Layout Name: D Size A
Path: G:\OU3-13-TANKFARM\9-6-00 Bellevue 09/06/00 - 08:43 A.M.

REVISIONS		
REV	DESCRIPTION	EFFECTIVE DATE:

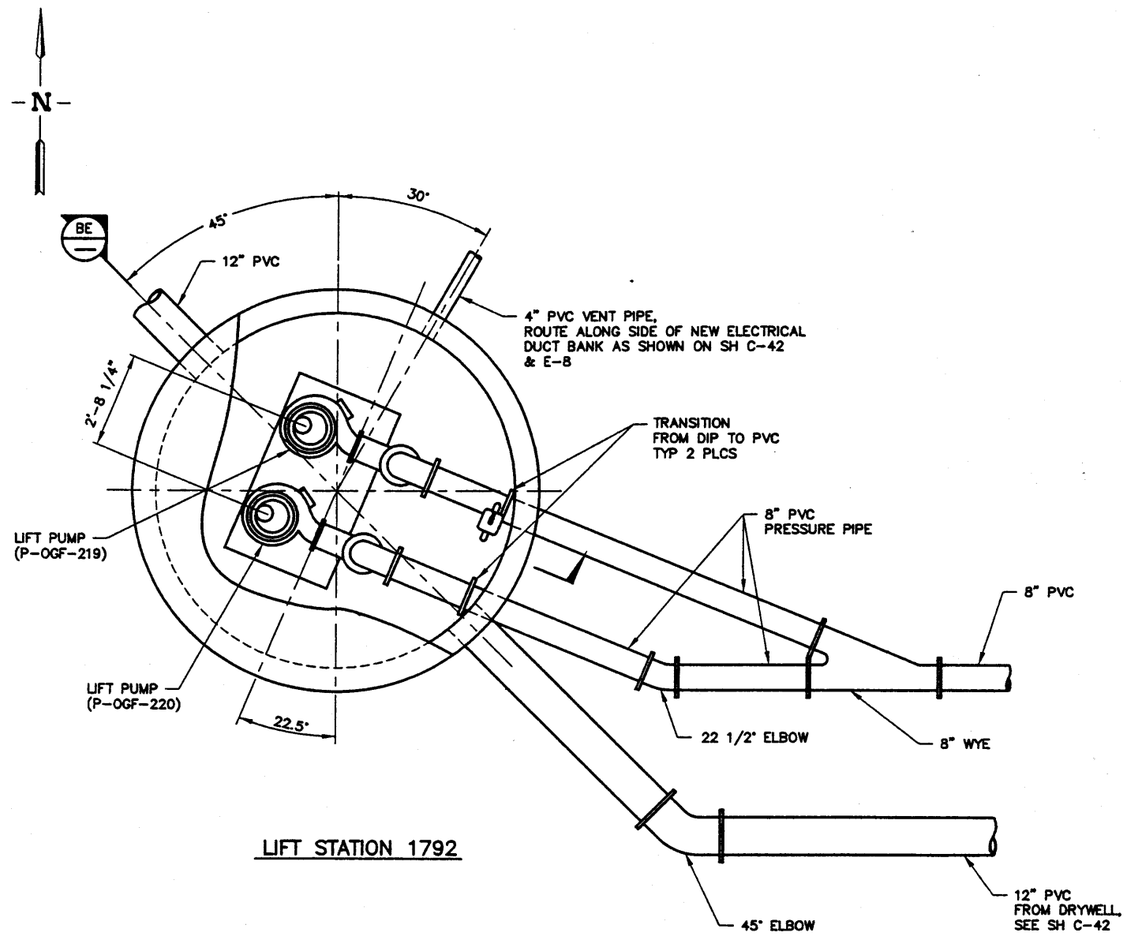

LIFT STATION 1792

DETAIL 36 C-3 REF C-4 C-11 C-12 C-42
SCALE: 1/2"=1'-0"

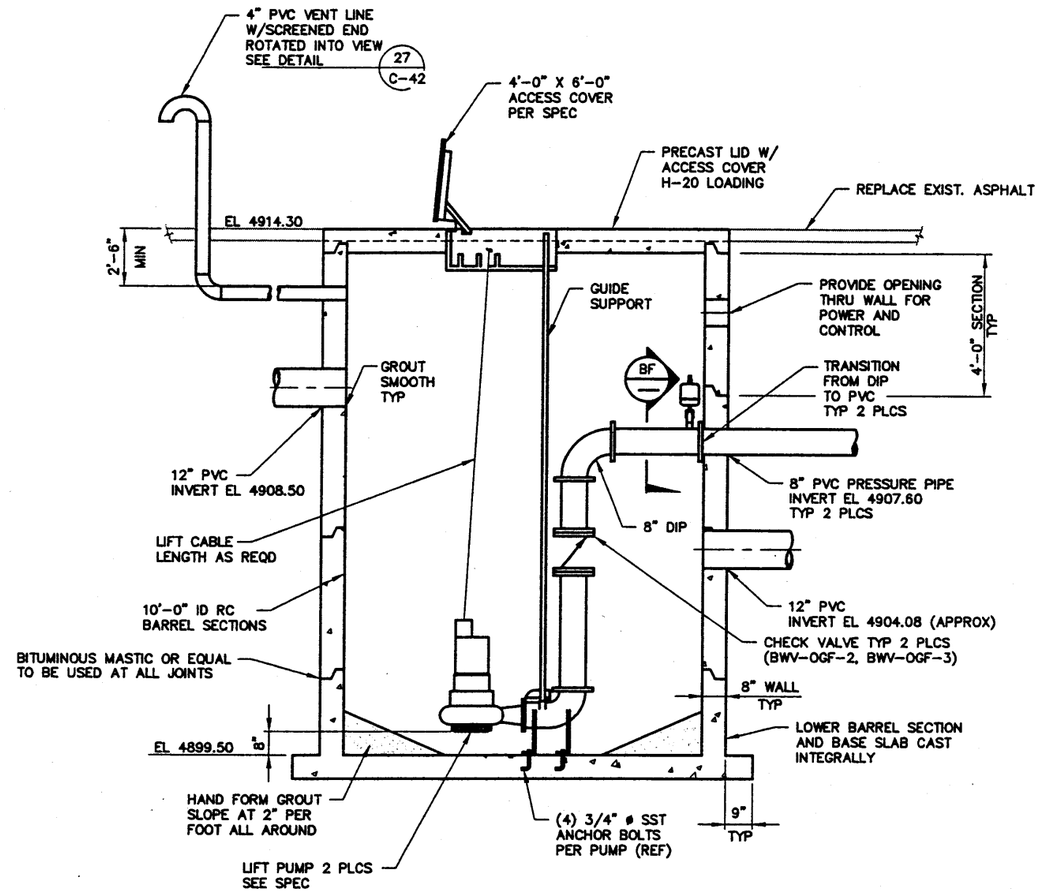

SECTION BE
SCALE: 1/2"=1'-0"

LIFT STATION 1792 CONTROL SETTINGS

HIGH LEVEL ALARM	EL 4909.00
PUMPS ON (BOTH)	EL 4908.00
FIRST PUMP ON	EL 4907.00
PUMPS OFF (BOTH)	EL 4901.00

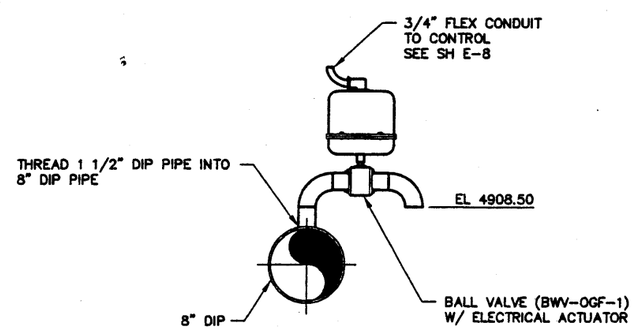

SECTION BF
SCALE: 1 1/2"=1'-0"

NOTES

1. PUMPS, GUIDE RAILS, ANCHOR BOLTS AND ACCESS COVER SHALL BE LOCATED WITH RESPECT TO EACH OTHER AS PER MANUFACTURER'S INSTALLATION INSTRUCTIONS AND DRAWINGS.

REVISION: 0
ORIGINAL SIGNED BY: KURT D. FRITZ
DATE ORIGINAL SIGNED: 9/18/2000
SEAL NUMBER: 9404
ORIGINAL STORED AT: EROB DOCUMENT CONTROL

PROFESSIONAL ENGINEER REGISTERED 9404 STATE OF IDAHO KURT D. FRITZ

FOR DRAWING INDEX SEE DRAWING NO. 515158	SUBCONTRACT NO. S00-588051	INEEL (Idaho National Engineering & Environmental Laboratory) BECHTEL BWXT IDAHO, LLC
SCALE: 1/2" = 1'-0"	REQUESTER: M.S. KAPTEIN	INEEL OU 3-13 GROUP 1 TANK FARM INTERIM ACTION PHASE 1 & 2 LIFT STATION SECTIONS AND DETAIL
SCALE: 1 1/2" = 1'-0"	DESIGN: KURT FRITZ	
	DRAWN: ROB HERGESHEIMER	
	PROJECT NO. 020978	
	SPEC CODE	
DESIGN PHASE: AFC	FOR REVIEW/APPROVAL SIGNATURES SEE DAR NO. 68366	SIZE D · CAGE CODE · INDEX CODE NUMBER: AREA 200, TYPE 1792, CL 60, ORIG 090 · DWG-515205 · REV
QUALITY LEVEL: 3	EFFECTIVE DATE: 9/18/2000	SCALE: NOTED · SHEET C-46

File: C-46.DWG ID: RDH5 Layout Name: Layout1
Path: G:\OU3-13-TANKFARM\9-6-00 Dalsu\09/18/00 - 08:57 A.M.

Attachment 1 to EDF-1379

EBAA Data Analysis Sheets

The Design of Restrained Piping Systems

Q: Can the use of restrained joints eliminate the need for thrust blocks and rods?

A: Yes.

In a properly designed restrained piping system, the use of thrust blocking and rodding can be completely eliminated.

When a pipeline undergoes a change of direction o a change of diameter, an unbalanced hydrostatic force is generated. Thrust blocking acts to resist this force by distributing it over a relatively large area of soil behind the fitting. The thrust block pushes on the soil, the soil pushes back.

Rodding acts to resist this force by tying several fittings together such that the forces generated are canceled. One fitting pushes in one direction, the other fitting pushes with an equal force in the opposite direction.

In a properly designed restrained piping system, a sufficient length of pipe is "locked" together and thus acts as its own thrust block. When the joints between a group of fittings is restrained, the pipe wall perform the function of the rodding.

One of the key elements in restrained piping is the proper and conservative design of such systems. The design goal is to determine a length of pipe to be restrained such that the soil's passive resistance and frictional resistive forces are greater than the unbalanced hydrostatic force. This length, combined with an appropriate factor of safety provides a conservative and economical method of pipeline desig

Although the number of combinations of fittings is beyond the scope of this program, combinations can often be simplified to one of the common fitting types. This is done by specifying restraint on all of the joints within the combination and then examining the axial force vectors along each length of pipe. In some cases many of the forces are canceled and the fittings can b treated as a group and calculation can proceed simila to an individual fitting.

For additional information on the design of restrained joint piping systems, contact EBAA Iron Sales and request "Connections" bulletins PD-1 through PD-6.

Project Name: TFIA

Drawing Location: Drawing C-12

EBAA IRON INC

Piping Materials

Pipe Material	PVC
Nominal Size	8"
Fitting Type	Vertical Offset
Bend Angle	45°

Installation Conditions

Soil Type	GM
Trench Type	5
Test Pressure	50 psi.
Safety Factor	1.5 to 1
Depth of Bury	6 ft.
Low Side Depth	8 ft.

Click here to review Fs and Rs values.

Fs, Rs

Restrained Length Calculation Results:

Upper Bend Restrained Length = 5 ft.

Lower Bend Restrained Length = 1 ft.

Calculate

Clear

Exit

Project Name: TFIA

Drawing Location: Drawing C-12

EBAA IRON INC.

Piping Materials

Pipe Material	PVC
Nominal Size	8"
Fitting Type	Horizontal Bend
Bend Angle	45°

Installation Conditions

Soil Type	GM
Trench Type	5
Test Pressure	50 psi.
Safety Factor	1.5 to 1
Depth of Bury	6 ft.

Click here to review Fs and Rs values.

Fs, Rs

Restrained Length Calculation Results:

Length To Be Restrained = 2 ft.

Calculate

Clear

Exit

Vertical Offsets

Resultant Thrust (T) = 2 · P · A · sin (theta / 2)

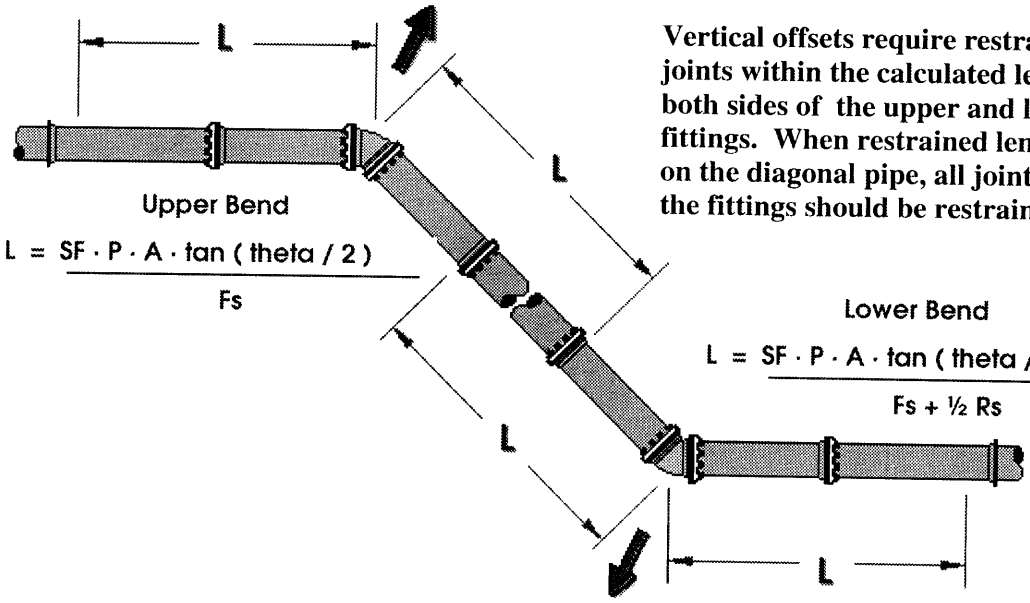

Vertical offsets require restraint of all joints within the calculated lengths (L) on both sides of the upper and lower fittings. When restrained lengths overlap on the diagonal pipe, all joints between the fittings should be restrained.

Upper Bend

$$L = \frac{SF \cdot P \cdot A \cdot \tan(\text{theta} / 2)}{Fs}$$

Lower Bend

$$L = \frac{SF \cdot P \cdot A \cdot \tan(\text{theta} / 2)}{Fs + \frac{1}{2} Rs}$$

Resultant Thrust (T) = 2 · P · A · sin (theta / 2)

Horizontal Bends

Resultant Thrust (T) = 2 · P · A · sin (theta / 2)

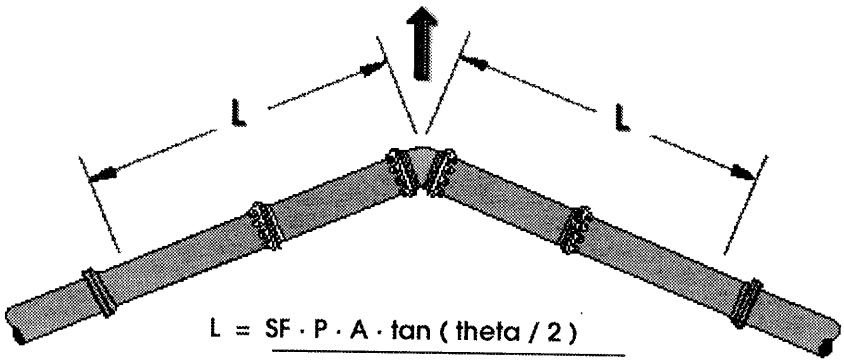

$$L = \frac{SF \cdot P \cdot A \cdot \tan(\text{theta} / 2)}{Fs + \frac{1}{2} Rs}$$

Horizontal bends require restraint of all joints within the calculated length (L) on both sides of the fitting. In many cases, careful planning during installation can reduce the number of joints within the restrained length.

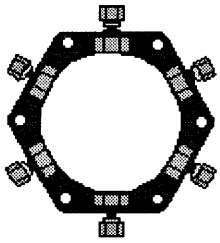

2000 PV Joint Restraint

Mechanical Joint Restraint for PVC Pipe

Application:
- ☐ Ductile Iron Pipe
- ☑ PVC Pipe
- ☐ Steel Pipe 3" - 12"
- ☐ Gray Cast Iron Pipe

Product Description

The Series 2000 PV joint restraint for PVC pipe is the result of over a decade of testing, design, and experience in the restraint of PVC pipe. Positive restraint of the pipe is provided by the use of individually actuated gripping wedges which act to evenly distribute the thrust forces around the circumference of the pipe. This is a full range product line for use on all sizes of AWWA C-900 and C-905 PVC pipe and can also be used on IPS diameter PVC pipe in 3" - 12" sizes. In all cases, the pressure rating is equivalent to that of the pipe on which it is used. This restraint product meets the requirements of UNI-B-13, is listed by Underwriters Laboratories (4" - 12"), and is Factory Mutual approved (4" - 12"). Call and ask for Connections bulletins PV-1 and PV-2 concerning the testing of the 2000PV.

Related Products

The 2000PV is offered in a split version called the 2000SV, used to restrain existing PVC pipe. The series 1600, 2800, and 2500 PVC pipe bell restraints are often used with the 2000PV to satisfy restrained length requirements.

Please feel free to call for additional information or application assistance on these or other EBAA products.

Appendix C

OU 3-13 Group 1, Tank Farm Interim Action, Evaporation Pond Sizing Design

Engineering Design File

Document Number: EDF-ER-206
Functional File Number: INEEL/EXT-2000-00920

The document that was the subject of this appendix was provided as an attachment to the original deliverable.

Appendix D

Engineering Design File

OU 3-13 Tank Farm Interim Action Group 1 Soils Decision Analysis Study

Document ID: EDF-ER-115
Revision ID: 0
Effective Date:

Engineering Design File

Operable Unit 3-13 Tank Farm Interim Action Group 1 Soils Decision Analysis Study

U.S. Department of Energy
Idaho Operations Office
Idaho Falls, Idaho

INEEL
Idaho National Engineering & Environmental Laboratory
BECHTEL BWXT IDAHO, LLC

Form 412.14
10/05/99
Rev. 02

ENGINEERING DESIGN FILE

1. Project File No. N/A 2. Project/Task OU 3-13 Group 1 Soils Tank Farm Interim Action

3. Subtask Phase 2 Scope of Work Recommendation

4. Title: OU 3-13 Phase 2 Tank Farm Interim Action Scope Recommendation

5. Summary: This Engineering Design File (EDF) contains information related to the selection of a Bechtel/Department of Energy recommendation for the OU 3-13 Tank Farm Interim Action, Group 1 soils at the Idaho Nuclear Technology and Engineering Center (INTEC). Work associated with Group 1 soils have been separated into two phases. This EDF contains information relating to Phase 2. The scope of the Phase 2 work consists of minimizing precipitation infiltration by grading and surface sealing the Tank Farm Soils sufficient to divert 80% of the annual precipitation falling on the Tank Farm Soils, as stated in the OU 3-13 Record of Decision.

On November 18, 1999, a facilitated decision analysis meeting was held to 1) discuss the options evaluated for surface sealing the Tank Farm, 2) identify additional options if any, 3) identify evaluation criteria, 4) select a recommended option, and 5) identify the risk associated with the recommendation. The options evaluated included asphalt, concrete, InstaCoat (a polyurea spray-on product), and an architectural structure. Various combinations of these options were also discussed. A Kepner-Tregoe Decision Process was used to select the recommendation. The resulting recommendation was InstaCoat. It should be noted that InstaCoat was the preferred option, however numerous polyurea products are available which may satisfy the necessary requirements. This recommendation will be presented to the State of Idaho and the Environmental Protection Agency for concurrence.

6. Distribution (complete package): R. Lee Davison, R. E. James, C. S. Evans, L. M. Higgins, T.W. Jenkins

Distribution (summary package only):

7. Review (R) and Approval (A) Signatures: (Minimum reviews and approvals are listed. Additional reviews/approvals may be added as necessary.)

	R/A	Printed Name	Signature	Date
Author	R	Peggy J. Jessmore	Peggy J. Jessmore	01/05/00
Independent Verification	R	C. Jestin Hurst	C. Jestin Hurst	01/05/00
Requestor	A	R. Lee Davison	R L Davison	01/05/2000

Operable Unit 3-13 Tank Farm Interim Action Group 1 Soils Decision Analysis Study

1. INTRODUCTION

1.1 Background

The Operable Unit (OU) 3-13 Group 1-Tank Farm Soils are soils at the Idaho Nuclear Technology and Engineering Center (INTEC) within the tank farm fence. The area within the fence is approximately 2 ha (5 acres). Previous operations within the tank farm have resulted in known areas of soil contamination. The major threats associated with these soils are the potential for direct exposure to workers or the public, and leaching and transport of contaminants to the perched water or to the Snake River Plain Aquifer. The OU 3-13 Tank Farm Soils Interim Action is designed to mitigate these risks until a final remedy is developed and implemented. The selected Interim Action is Institutional Controls with Surface Water Control. The major action objectives of this remedy are:

- Restrict access to control exposure to workers and prevent exposure to the public from soils at the Tank Farm until implementation of the final remedy under OU 3-14
- Accommodate a 1 in 25-year, 24-hour storm event with surface water runon diversion channels
- Minimize precipitation infiltration by grading and surface sealing the Tank Farm Soils sufficient to divert 80% of the average annual precipitation falling on the Tank Farm area
- Improve exterior building drainage to direct water away from the contaminated areas.

The OU 3-13 Group 1 Soils Interim Action is divided into two distinct phases.

1. Phase 1 consists of upgrades to the existing surface water drainage systems within 46 m (150 ft) of the tank farm fence and the construction of an evaporation basin for storm water collection, assuming a gravity flow system.
2. Phase 2 consists of surface sealing/covering the tank farm area within the existing tank farm fence to reduce infiltration into the Tank Farm Soils, and is the subject of this study.

The following sealing/cover options and various combinations of these options were investigated: (1) asphalt, (2) concrete, (3) building(s), (4) RoadOyl©, and (5) InstaCoat.© (It should be noted that during the Phase 2 options evaluation, InstaCoat© was investigated; however, numerous polyurea products are available which may satisfy the necessary requirements).

A facilitated Decision Analysis Meeting was held on November 18, 1999 to: (1) discuss the options evaluated for surface sealing/covering the tank farm, (2) identify additional options, if any, (3) identify evaluation criteria, (4) select a recommended option, and (5) identify the risk associated with the recommendation. Participants at the meeting included personnel from DOE-ID, WAG-3 Projects, Facilities Engineering, and Facility Operations. The meeting minutes are included in Appendix A.

1.1.1 Existing Tank Farm Liner

In 1977, a geomembrane liner was installed over the entire surface of the tank farm to prevent infiltration to the tank farm affecting sensitive instrumentation within the tank vaults. After installation, approximately 15 cm (6 in.) of gravel and sand were placed on top of the liner. The liner has been breached and repaired in several locations; however, the overall condition of the liner is not known since it is below grade.

Each year, approximately 151,417 to 238,906 L (40,000 to 75,000 gal) of water accumulate in the tank vaults. Small scale dye tests have been performed to determine the source of the water but have been inconclusive in determining a singular source for the infiltration.

1.1.2 Surface Conditions

The tank farm area (TFA) within the fence is approximately 2 ha (5 acres). Within these 2 ha (5 acres) are numerous surface protrusions and multiple above grade concrete duct banks. All resurfacing options will require a precise grading plan.

1.1.3 Tank Farm Load Limitations

The surface loads allowed in the TFA are strictly controlled to avoid damage to the underground vaults (see management control procedure [MCP] INTEC-MCP-P7.5-A1). A load study[1] of the TFA was performed in 1993 to examine the effects of vehicles and mobile equipment on the tank farm to prevent overloading of the tank vaults. The study established specific operational load limits and restrictions based upon the in situ at rest soil pressure as the baseline load condition. Using the results of this study, various load zones (A-D) were established in the TFA to prevent damage to the tanks and vaults which could be overstressed by operational loads. Zone A is the most restrictive; Zone D is the least restrictive.

The load study can be summarized as follows: operational loads impacting the tank farm vaults shall not increase the load on any structural member by more than 10% above the load of the at rest soil. Sources at the tank farm report the at rest soil cover (i.e., the fill) in the TFA to vary between 1.5 and 3.1 m (5 and 10 ft). The maximum amount of additional cover material that could be added to the TFA would therefore be 15 to 31 cm (6 to 12 in.) depending upon the thickness of the existing soil cover. No additional load (i.e., vehicular traffic/equipment) could then access the tank farm.

An engineering evaluation of the 1993 load study was performed in October 1999. The results indicated that the 1993 study was conservative. The recent evaluation removed the conservatism and combined some zone areas. The major changes resulting from this study are: (1) the various C zones (i.e., C-1 through C-5) were combined into one zone, (2) a 45,359 kg (100,000 lb) dynamic work area with 46-m (150-ft) separation zones was established, and (3) a less restrictive D zone was established. A new MCP incorporating these changes is being developed.

There are several ways to accommodate the load restrictions when covering the tank farm area as part of the Phase 2 portion of the Interim Action. As presented in the meeting, the soil on the tank farm was originally intended to function as radiation shielding. It has since been determined that this shielding is not necessary due to the known radiation levels (i.e., lower than expected). This soil could, therefore, be removed, if necessary, to accommodate the cover option selected and allow for the additional load

---

[1] Advanced Engineering Consultants, Inc., "Evaluation of Existing Vaults for Vehicle Loads, HLWTFR Project," August 1993.

created by the cover. It must be recognized, however, that soil below the existing liner may be contaminated.

It is also permissible to change the current surface grade within the same zone (i.e., cuts and fills that are of equal volumes can be accommodated within the same zone without exceeding the load limitations). Major changes to the grading on the tank farm, however, may require recalculation of the loading restrictions and associated procedural modification. A rough cost estimate for this recalculation effort is approximately $500,000 and 6 to 12 months of effort.

2. DECISION PROCESS METHODOLOGY

A Kepner-Tregoe Decision Process was used to evaluate the tank farm cover options investigated during the scoping process, and to arrive at a recommendation. As part of this process, meeting participants defined a list of criteria for evaluating the various options. The criteria were assigned a weight factor, and the options were ranked against the weighted criteria on a relative basis from 1 to 10, with the option best meeting the criteria receiving 10 points. Each of the remaining options were then ranked relative to the option receiving 10 points. The option scoring the highest point value became the recommended option. Adverse consequences were assessed for the two highest scoring options. Appendix A contains a summary of the decision analysis matrix results.

2.1 Assumptions and Decision Criteria

Prior to establishing the decision criteria, assumptions germane to all of the options were identified, and are listed below:

- Any surface application will require grading and possibly disposal of soils
- Relocation of the duct banks may not be required
- Subtraction of load is preferred to eliminate additional load analysis
- Any option selected will be maintained for 50 years or more.

The criteria selected for evaluating the various cover options discussed, along with corresponding weight factors are listed in Table 1.

Table 1. Criteria for evaluating cover options.

Criteria	Weight %
Installation cost—cost/ft^2	17.4
Schedule—When can it be in place?	16.0
Least impact to Operations, Maintenance, other programs and projects	16.0
Long term costs (cost to remain functional for normal operations)	14.9
Ease of application/installation	14.4
Durability of material (without maintenance considerations)	N/A (deleted)
Ease/quality of repair	10.2
Secondary contamination issues	5.5
Ease of change-out of the material	5.5

Five options were evaluated against the weighted criteria. Because asphalt and RoadOyl© are similar with respect to the identified criteria, these two options were combined. The five options evaluated were as follows:

1. Concrete
2. InstaCoat©
3. Building(s)
4. RoadOyl©/Asphalt
5. Traffic/no-traffic hybrid combination (i.e., RoadOyl© applied to the traffic bearing surfaces, and InstaCoat© applied to the remaining areas).

Rough order of magnitude cost estimates for these options are contained in Appendix B.

3. OPTIONS EVALUATED

3.1 Concrete Paving

The pros and cons associated with using concrete to cover the surface of the tank farm are provided in Table 2.

Table 2. Pros and cons of concrete.

Pros	Cons
Experience using this material at the INEEL	Difficulty removing and accessing subsurface utilities, etc. due to reinforcement used in pour
Prepared surface can withstand equipment and foot traffic	Surface regrading to create positive drainage required
Can withstand local temperature ranges	Installation will be fairly labor intensive (hand work) due to numerous obstructions at the surface (i.e., pipes, vents, vaults, sheds, etc.)
Low maintenance requirements	Weather limitations during installation (i.e., must be protected from heavy rainfall)
Improved working surface for men and equipment	Loading issues—required thickness is 10 to 20 cm (4 to 8 in.)
Clear field of view (i.e., the entire tank farm is open for observation/unobstructed)	

3.2 InstaCoat©

InstaCoat© is a polyurea spray-on product produced by New Waste Concepts, Inc. The pros and cons associated with using InstaCoat© to cover the surface of the tank farm are provided in Table 3.

Table 3. Pros and cons of InstaCoat.©

Pros	Cons
Impermeable	Surface regrading to create positive drainage required
Easily repaired	Potential waste disposal issues when the Tank Farm is remediated
Clear field of view (i.e., the entire tank farm is open for observation/unobstructed)	Requires routine maintenance and repair
Prepared surface can withstand equipment and foot traffic	No experience using this type of product in this application at the INEEL
Can withstand local temperature ranges	Weather limitations during installation (i.e., must be protected from rain).
Can be made/applied quickly using force account personnel (i.e., no subcontract required if we purchase the pump)	
Low maintenance requirements	
Can be applied during winter	
Bonds to various surfaces (i.e., metal, concrete, soil)	
Improved working surface for men and equipment	
Low additional surface loading	
Product can be designed to meet specific site needs (i.e., elasticity)	

3.3 RoadOyl©

RoadOyl© is an environmentally safe product manufactured by Soil Stabilization Products Company, Inc. and is similar to asphalt paving in that it also requires compaction. It is made from talloil, which is harvested from pine trees. The pros and cons associated with using RoadOyl© to cover the surface of the tank farm are provided in Table 4.

Table 4. Pros and cons of RoadOyl.©

Pros	Cons
High strength and flexibility of product (stronger than asphalt, as flexible as asphalt)	Cannot be applied during the winter months. Spring application recommended (temperatures above 60°F required)
Not affected by freezing or UV	Weather limitations during installation (i.e., must be protected from rain)
Clear field of view (i.e., the entire tank farm is open for observation)	Surface regrading to create positive drainage required
Environmentally friendly product (i.e., nonpetroleum)	Base course preparation must be prepared to the specified typical section, lines, grades and compaction
Less susceptible than asphalt to gasoline infiltration	No experience with product at INEEL
Cold application	Medium to high maintenance of surface required (i.e., fog seal required every few years, patching/repair after penetration)
Repels water	Mix yourself/ mix design required
Improved working surface for men and equipment.	Test section of mix required (minimum of 31 × 6 m [100 ×20 ft])
	One extra rolling sequence required compared to installing asphalt (additional labor)
	Installation will be labor intensive (hand work) due to numerous obstructions at the surface (i.e., pipes, vents, vaults, sheds, etc.)
	Equipment and traffic is not permitted on surface until curing is assured.

3.4 Asphalt

The pros and cons associated with using asphalt to cover the surface of the tank farm are provided in Table 5.

Table 5. Pros and cons of asphalt.

Pros	Cons
Clear field of view (i.e., the entire tank farm is open for observation (i.e., unobstructed view).	Surface regrading to create positive drainage required.
Improved working surface for men and equipment.	Waste disposal issues related to asphalt when the Tank Farm is remediated.
Experience using this product at the INEEL.	Medium to high maintenance of asphalt surface required (i.e., seal coat required every few years, patching/repair after penetration).
Prepared surface can withstand equipment and foot traffic	Potential environmental effects due to sun, temperature fluctuations, etc.
	Installation will be labor intensive (hand work) due to numerous obstructions at the surface (i.e., pipes, vents, vaults, sheds, etc.).
	Potential leaching of hazardous constituents
	Weather limitations during installation.

3.5 Building(s)

The type of building evaluated was a sprung structure. The pros and cons associated with using a sprung structure to cover the surface of the tank farm are provided in Table 6.

Table 6. Pros and cons of sprung structures.

Pros	Cons
No foundation required	Earth anchors that penetrate the surface required (lots of subsurface issues)
Little to no surface preparation (i.e., grading) required prior to installation; therefore limiting personnel exposure to hazardous constituents, labor and disposal costs	Gutter system and additional drainage areas between structures would be required, resulting in additional costs and potential maintenance issues
Can use internal unskilled labor to erect	If more than one structure is used, potential underground accessibility issues if the buildings are located too close together (i.e., repair of underground utilities between buildings requiring heavy equipment)
Reusable structure	Limits field of view for the TFA
Low maintenance during the required life of the building	Access limitations
Provides protective environment to work in	Equipment height limitations
Complete elimination of storm water infiltration into areas beneath the structure, therefore no installed infiltration monitoring required–visual only	High front end cost
Can erect structure in the winter	Potential fire protection system required (unknown)
Could use building to contain contaminants and contaminated materials during TF remediation	Inspection requirements (unknown)
Minimal effects from environmental factors (i.e., wind, sun, temperature fluctuations)	Utility costs (lighting, ventilation).
Vehicle restrictions will not change from what is currently allowed.	

3.6 Traffic/No Traffic Hybrid

A combination of RoadOyl© and InstaCoat© was evaluated under this option. Using this option, RoadOyl© would be applied to the traffic areas of the tank farm, and InstaCoat© would be applied to the remainder of the area. This option would accommodate traffic with minimal repairs required. RoadOyl© is the preferred substance over asphalt because it is "environmentally friendly," will not leach hazardous substances, and can be disposed in a Subtitle D landfill.

4. FINAL PHASE 2 RECOMMENDATION

The option scoring the highest points using the Kepner-Tregoe Decision Process (as discussed in Section 2), is InstaCoat©. How this option scored in relation to the other options investigated is shown in Appendix A. It is recommended that a test section be constructed at the site to determine product performance and bonding capabilities to various materials, and/or to visit a site using this product in a similar application. It was also suggested that a removable metal track system, similar to what the Army uses (PSB), be used to accommodate traffic/equipment access paths and protect the InstaCoat© surface, if required.

It should be noted that during the Phase 2 scoping, InstaCoat© was investigated; however, numerous polyurea products are available which may also satisfy the necessary requirements.

The adverse consequences, or risk of using this option as the preferred option were assessed and no risks were identified as critical.

Appendix A

Meeting Minutes

INEEL
Idaho National Engineering & Environmental Laboratory

INTEROFFICE MEMORANDUM

Date:	December 21, 1999		
To:	R. Lee Davison	MS 3953	6-3770
From:	Linda C. Seward (lcs)	MS 3634	6-7800
Subject:	MEETING SUMMARY FOR THE INTEC TANK FARM INTERIM ACTION OPTION SELECTION – LCS-19-99		

A Decision Analysis Meeting was held November 18, 1999 to evaluate the surface sealing options to meet the requirements of the Tank Farm Interim Actions specified in the OU3-13 Record of Decision (ROD). The meeting was held at TSA, Classroom D. A list of meeting participants is included in the attachment, along with the objectives and deliverables for the meeting. Also included in the attachment are the action items from the meeting, assumptions generated during the meeting and ideas that were recorded. A Kepner-Tregoe Process was followed and the Decision Analysis Matrix is included.

Five options for sealing the surface of the Tank Farm to minimize precipitation infiltration were evaluated. The preferred option is to use a polyurea spray-on material to provide the protection required to meet the Interim Action Objectives. This type of material is relatively easy to apply and to repair. A test of the materials under our specific conditions will be conducted.

The meeting began with your discussion of the background information on the Interim Action Objectives and a review of the options developed for consideration. The action objectives are:

- Restrict public access to prevent exposures to contaminated soil until implementation of OU3-14.
- Provide diversion for 25-year/24 hour storm event.
- Minimize precipitation infiltration by grading and surface sealing the Tank Farm Soils sufficient to divert 80% of annual precipitation falling on the Tank Farm Soils.
- Improve exterior building drainage to direct water away from the contaminated areas.

Specific issues regarding the Tank Farm loading and use restrictions were addressed. Requirements for grading were discussed by Kurt Fritz, and restrictions on loading were discussed by Nate Smith. The team stressed that the current membrane should remain in place. There are multiple penetrations in the membrane to accommodate pipes and other protrusions on the Tank Farm.

The team brainstormed a list of criteria for evaluating the options. The criteria were assigned a weight factor and the options were ranked against the weighted criteria. The options were ranked relative to each other, with the option that best met the assigned criteria receiving 10 points and the other options receiving between 1and 10 points, with 10 being the highest. The

point value was then calculated against the assigned weight for the criteria and a weighted value for each of the options was determined.

As previously mentioned, the option to use a polyurea spray-on material over the entire tank farm area scored the highest number of points in the ranking. The second highest scoring option was to use a hybrid of the spray–on over most of the tank farm area and asphalt or Road Oyl for those areas that require equipment and traffic. This option would accommodate the traffic with minimal repairs to the spray-on material. Road Oyl is the preferred substance because it is much more environmentally acceptable and can be disposed in a landfill. The combination of the two materials would also provide a stronger base for equipment and vehicles. Adverse consequences, or risk, associated with the top two options were identified. There were no risks identified that are critical to the preferred option.

The meeting concluded with a review of the objectives and finalization of action items and assumptions.

This team of technical experts performed an objective evaluation of the options, incorporating criteria that is important to the Tank Farm and to the success of this project. It was a pleasure working with you and if you have needs for facilitation in the future, please contact me.

Attachment

cc: R. L. Collins, DOE-ID, MS 1117
R. L. Davison, BBWI, MS 3953
C. S. Evans, BBWI, MS 3953
K. D. Fritz, BBWI, MS 3650
L. M. Higgins, BBWI, MS 3954
C. J. Hurst, BBWI, MS 3953
R. E. James, BBWI, MS 3953
T. W. Jenkins, DOE-ID, MS 1117
P. J. Jessmore, BBWI, MS 3953
D. C. Machovec, BBWI, MS 5104
T. J. Meyer, BBWI, MS 3953
N. B. Smith, BBWI, MS 5106
M. C. Swenson, BBWI, MS 5218
F. S. Ward, BBWI, MS
J. M. White, BBWI, MS 5111
L. C. Seward Letter File
Project File #99-058

ATTACHMENT

INTEC TANK FARM INTERIM ACTION
Thursday, November 18, 1999
TSA Classroom D

Name	Phone	MS	E-Mail	Representing
Rachel L. Collins	6-1661	1117	-	DOE-ID
R. Lee Davison	6-3770	3953	Ran	WAG-3 Project Management
C. Sue Evans	6-1493	3953	Evancs	WAG-3 Project
Kurt D. Fritz	6-4914	3650	Fritkd	Mechanical Engineering
Lynn M. Higgins	6-8201	3954	Hml	WAG-3 Project
C. Jestin Hurst	6-3115	3953	Hurscj	WAG-3 Project
Bob E. James	6-5020	3953	Jamere	WAG-3 Project
Talley W. Jenkins	6-4978	1117	Jenkintw	DOE-ID – WAG-3
Peggy J. Jessmore	6-9367	3953	Pgg	WAG-3 Project
T. J. Meyer	6-0730	3953	Meyetj	Integrated Earth Sciences – WAG-3
Nathan B. Smith	6-3873	5106	Nsmith	Structural Engineering
Mike C. Swenson	6-3576	5218	Mswenson	EM HLW Program Support

Facilitator

Linda C. Seward	6-7800	3634	Lca	Value Engineering

Action Objectives

- Restrict public access to prevent exposures to contaminated soil until implementation of OU3-14.
- Provide diversion for 25-year/24 hour storm event.
- Minimize precipitation infiltration by grading and surface sealing the Tank Farm Soils sufficient to divert 80% of annual precipitation falling on the Tank Farm Soils.
- Improve exterior building drainage to direct water away from the contaminated areas.

Meeting Objectives

- Discuss/identify options for the Tank Farm.
- Identify evaluation criteria.
- Select a recommended option.
- Identify risk associated with the recommendation.

Meeting Deliverables

- Recommended option for Tank Farm Interim Action Phase 2.
- Summary report of the meeting.

ACTIONS

- Can we use the duct bank as a gutter system?
- Is the Tank Farm membrane sloped?
  - According to Mike Swenson the liner was constructed on a 2% grade.
- What is the life expectancy of the spray-on material?

ISSUES

- Tank Farm loading and use restrictions.
- Impact to ongoing Operations and Maintenance.
- Life Cycle costs.
- Contamination risk associated with handling materials below the existing membrane.

IDEAS

- Establish and reinforce access paths on the Tank Farm. Provide roll pads or a track similar to what the Army uses (PSB) to run across the tank farm surface without damaging the covering.
- Consider putting fabric over the gravel before the spray-on is applied.
- Do a "test bed" of the materials to determine how well they work. Include a test of the material around the protrusions.
- Visit sites with a similar application of the material(s).
- Determine what the chemical make-up is for the spray-on material. Is it hazardous?

ASSUMPTIONS

- Any surface application will require grading and disposal of soils.
- Re-location of the duct banks may not be required.
- Subtraction of load is preferred to eliminate additional load analysis.
- Any remedy will need to be maintained 50 years.
- Cuts and fills that are equal in volume can be accomplished within a loading zone. For example, adding fill to one part of the zone is okay if an equal amount of cut is removed from another section of the same zone.

Background Information:

Phase I of the Tank Farm Project is to improve drainage around the perimeter of the tank farm. Phase II will seal the surface of the Tank Farm and is the focus of this meeting. The perimeter boundaries of the Tank Farm are considered out of scope for this meeting.

The Record of Decision (ROD) Action Objectives for the meeting are:

- Restrict public access to prevent exposures to contaminated soil until implementation of OU3-14.
- Provide diversion for 25-year/24 hour storm event.
- Minimize precipitation infiltration by grading and surface sealing the Tank Farm Soils sufficient to divert 80% of annual precipitation falling on the Tank Farm Soils.
- Improve exterior building drainage to direct water away from the contaminated areas.

The soil on the Tank Farm was originally used for shielding but it is not needed now with the lower radiation levels. Changing the grading on the Tank Farm may require re-calculation of the loading restrictions with associated procedure modifications. A very rough estimate would be about $500,000 and 6-12 months of effort.

Options:

Options considered during the meeting included cost estimates for 200,000 ft^2, installation and construction. The following options were considered.

Insta-Coat (Spray-on Coating): A typical application is on concrete or steel. It is easily repaired. Field testing under the conditions it will be used is recommended. It may not stand up to heavy equipment running across it, so suggestions were made to provide a removable track system, similar to what the military uses, for vehicular access. From this suggestion a new option was defined that provided a more stable surface, Road Oyl, Asphalt, or Concrete in the travel areas and Insta-Coat in the remaining area.

The temperature range for the spray-on is compatible with the temperatures at INTEC. The chemical make-up of the material can be altered to meet the needs of the application, to provide different properties such as elasticity. It can be applied in various thicknesses', bonds well, and is easy to apply.

Road Oyl: Road Oyl is 4 times stronger than asphalt and is made from recycled wood products. It can be dispositioned in a landfill.

Sprung Structure: To construct the structure there must be penetrations into the Tank Farm area to support the structure. The structure limits access for the equipment.

Asphalt: There is an issue with detecting leaks and broken pipes with the asphalt and the concrete.

Comparison of the Options:

Option	Cost	Unit Rate	Details
Asphalt	$2.271 Million	$11.35/ft^2	3" thickness
Concrete	$2.459 Million	$12.30/ft^2	4" thickness
Insta-Coat	$2.184 Million	$10.92/ft^2	Spray on, primer, surface coat, sand to make it rough. Surface preparation is to compact, sand and rake. It is well within the temperature range – the chemical make-up can be changed – suggested application is approximately ¼" thick.
Sprung Structure		$51.87/ft^2	Protects the Tank Farm, allows maintenance, requires anchoring. Estimate is for a building 120x200 feet.
Acadaspan		$44.45/ft^2	Estimate for 150x150 feet.
Road Oyl		N/A	Made from wood products, Environmentally preferred over asphalt.
Hybrid (Travel/No-Travel)		N/A	Use the Insta-Coat in areas other than the travel areas. Cover the travel areas with Asphalt, Road Oyl, or Concrete.

Decision Criteria:

Criteria were developed and a weight assigned to the criteria for ranking the options. The criteria and weight factors are:

Criteria	Weight %
Installation Cost – Cost/ft^2	17.4
Schedule – When can it be in place?	16.0
Least Impact to Operations, Maintenance, other Programs and Projects	16.0
Long Term Costs (cost to remain functional for normal operations)	14.9
Ease of Application/Installation	14.4
Durability of Material (w/o maintenance considerations)	N/A (deleted)
Ease/Quality of Repair	10.2
Secondary Contamination Issues	5.5
Ease of Change-out of the Material	5.5

For the evaluation, the options for Asphalt and Road Oyl were combined. Five options were evaluated against the weighted criteria. The five options are Concrete, Insta-Coat, Structure(s), Road Oyl/Asphalt, and a Traffic/No-Traffic Hybrid. These options were ranked against the

weighted criteria on a relative basis from 1to10 points, with the option best meeting the criteria receiving 10 points. Each of the remaining options were then ranked relative to the option scoring 10 points. The option scoring the highest was the preferred option. Adverse consequences were identified for the two highest scoring options and no "show stoppers" were identified for the options.

Decision Analysis Matrix	Alternatives	Concrete	Insta-Coat	Structure	Road Oyl/ Asphalt	Traffic/ No-Traffic Hybrid
"Want" Criteria	Wt.					
Installation Cost ($Cost/ft^2$)	17.4	5 87.0	10 174.0	1 17.4	7 121.8	8 139.2
Schedule (When can it be in place?)	16.0	6 96.0	10 160.0	1 16.0	4 64.0	7 112.0
Least Impact to Operations, Maintenance, other Programs and Projects (D&D, EIS).	16.0	3 48.0	6 96.0	2 32.0	4 64.0	8 80.0
Long Term Costs (Cost to remain functional for normal ops.)	14.9	10 149.0	5 74.5	1 14.9	7 104.3	6 89.4
Ease of Application/Installation	14.4	7 100.8	10 144.0	1 14.4	6 86.4	8 115.2
Durability of Material (W/O Maintenance considerations)	N/A	N/A	N/A	N/A	N/A	N/A
Ease/Quality of Repair	10.2	3 30.6	10 102.0	1 10.2	6 61.2	8 81.6
Secondary Contamination Issues	5.5	10 55.0	10 55.0	10 55.0	7 38.5	10 55.0
Ease of Change-Out of Material	5.5	2 11.0	10 55.0	4 22.0	6 33.0	8 44.0
Total		577.4	860.5	181.9	573.2	716.4
Rank Order		3	1	5	4	2

ADVERSE CONSEQUENCES

Spray-On (Insta-Coat) Material	P	S
• If the Insta-Coat does not hold up, then we must repair or replace the material.	M	L
• If the Insta-Coat is punctured, then it must be repaired or replaced.	H	L

Hybrid – Spray–On (Insta-Coat) plus Road Oyl or Asphalt for Traffic Pattern Areas	P	S
• If the Insta-Coat does not hold up, then we must repair or replace the material.	M	L
• If the Insta-Coat is punctured, then it must be repaired or replaced.	H	L
• If a steam line breaks in the area of the Road Oyl or Asphalt, then the Road Oyl or Asphalt must be removed and the line repaired.	H	M

P = Probability of the Consequence
S = Seriousness of the Consequence

H = High
M = Medium
L = Low

Agenda

Thursday, November 18, 1999

8:00	Welcome/Introductions	Linda Seward
8:10	Background Discussion/Issues and Potential Options	Lee Davison
9:20	Gain consensus on meeting objectives	Team
9:30	BREAK	
9:45	Discussion of Options • Cost Estimate Information • Brainstorm additional Options	Team
11:00	Finalize List of Options	Team
11:30	Brainstorm Criteria for Evaluation Finalize Evaluation Criteria • Identify "Must" Criteria • Identify and weigh the "Want" Criteria	Team
12:00	LUNCH	
12:30	Rank the Options against the Weighted Criteria	Team
2:00	Select the Preferred Option Identify Adverse Consequences to the Option	Team
2:30	Finalize Recommendation Assign Actions/Validate Assumptions	Team
3:00	Adjourn	

Appendix B

Rough Order of Magnitude Cost Estimates

Lockheed Martin Idaho Technologies Company

COST ESTIMATE SUPPORT DATA RECAPITULATION

Project Title: WAG 3 INTERIM TANK FARM ACTION
Estimator: J. D. Folker / T.R. Mitchell
Date: October 6, 1999
Estimate Type: ROM
File: 2960
Approved By:

I. **SCOPE OF WORK:** *Brief description of the proposed project.*

OPTION #2 - CONCRETE

The scope of work includes constructing surface water drainage by placing concrete paving over approximately a two hundred thousand square foot area site at the Tank Farm. The purpose for this procedure is to reduce water infiltration to contaminated soil at the Tank Farm Area (TFA). The surface water will be drained off the site area by way of existing drainage ditches and sloped areas. This process will be accomplished by pacing four (4) inches of concrete over the load-restricted areas, or approximately 140,000 square feet and eight (8) inches over the areas that will be traveled or approximately 60,000 square feet. In order to accomplish the above process, considerable site re-grading and/or reshaping the existing area will be required. After the concrete has been finished, it will be sealed with a spray coat of asphalt sealer.

Duct banks and other penetrations should be flashed with a pre-designed, pre-engineered flashing material.

In-as-much as this is a Rough Order of Magnitude (ROM) type estimate, it is to be understood there must be considerable Engineering input.

II. **BASIS OF THE ESTIMATE:** *Drawings, Design Report, Engineers Notes and/or other documentation upon which the estimate is originated.*

Discussions and verbal coordination with Lee Davison (Project Manager), Peggy Jessmore (Assistant to the Project Manager), and a walk-down at the site with Dave Mackovec (Facility Engineer).). Quote's for asphalt were obtained from Rance Bair at Desert Sage. Insta Coat Spray on quotes were obtained from Tom Nachtman at New Waste Concepts Inc. Quotes for the Sprung Structure were obtained from Paul Shriver at Sprung Instant Structures.

III. **ASSUMPTIONS:** *Conditions statements accepted or supposed true without proof of demonstration. An assumption has a direct impact on total estimated cost.*

The following issues have been assumed:

1. All work will be competitively bid and performed by a prime subcontractor with specialty work performed by lower tier subcontractors as needed.
2. Non-working supervision will be required.
3. Access to and from the work area for personnel and any equipment will be made available.
4. Maintenance and Operations (M&O) will perform design and construction management.
5. Construction work for this project will be performed during a standard 40-hour week with no overtime allowances.
6. A construction period not to exceed four months, including mobilization, training, decontamination, and demobilization has been assumed.
7. The concrete process cannot be accomplished during wet or cold weather.
8. All personnel will require initial or refresher training. An average of 40 hours per person has been allowed in this estimate.
9. Half time Radiological Control Technician (RCT) (paid by M&O) has been assumed.
10. Electrical power for this project will be made available within 100 feet of the work area paid by M & O.
11. There are no major mechanical, plumbing, or electrical additions or modifications required. It is further assumed that piping or other mechanical utilities will not be affected by this work.
12. Any demolition material or soils will be disposed at the ICPP Low-Level Waste stockpile area.
13. M&O will furnish any and all hot boxes needed to dispose of any and all hot area soil that will require removal.
14. Costs for collecting and hauling off up to 20 boxes of soil has been figured in this estimate. It is further assumed that the haul distance will not exceed five (5) miles or will be disposed of at the ICPP Low Level Waste stockpile area.
15. Any material within the confines of proposed site area that will need to be hauled from the site would require a hazardous waste determination.
16. Any hazardous/contaminated area that will require disposal will be surveyed located and marked prior to start of construction by M&O.
17. Sprinkling of the site as needed will control any windblown contamination, and the water source is available at the site at no cost to this estimate.
18. Personnel Protective Equipment (PPE) that will be required will be furnished at no cost, by M & O.
19. Work being completed inside the TFA fence will not require any RAD equipment or controls except those few areas identified by survey.

20. All major construction equipment, other than small tools and expendables can be decontaminated on site and recovered. No cost have been included for replacement of equipment in this estimate.
21. The extent of the concrete area of this project has been determined as being five (5) acres and no allowance has been given for minor boxes and/or protrusions for reduction of scope in these areas.
22. Adjustments for labor productivity are assumed to be adequate for decreased output, downtime, specific job site orientation, and other factors based on anticipated on-site conditions.
23. Approximately 10 to15 percent of the 200,000 square feet area will be accomplished by means of handwork and light tools and equipment. The remaining 85 to 90 percent may be accomplished by more conventional type pumping equipment. There is a need to proceed very carefully as the heavier equipment will not be allowed within the 10 foot restricted areas of existing structures plus there are numerous surface penetrations in these areas.
24. All load-restricted areas will be identified.

IV. CONTINGENCY GUIDELINE IMPLEMENTATION: *The percentage used for contingency as determined by the contingency allowance guidelines can be altered to reflect the type of construction and conditions that may impact the total estimated cost.*

The greatest risk for anticipated cost increases lies in the potential for encountering contaminated materials, resulting in considerable increases in labor and equipment costs. Specific facility/area requirements have not at the time of this estimate been finalized, and the unknowns associated with surface and subsurface work, with the inherent possibility of encountering differing conditions as existing work is opened up, creating a high potential for increased costs.

The overall rate of contingency is based on the fact that facility requirements could and probably will change. Differing conditions during design or construction could effect costs and regulatory changes could increase requirements associated with the project. Contingency rate is estimated to be approximately 30 percent.

V. OTHER COMMENTS/CONCERNS SPECIFIC TO THE ESTIMATE

The estimate includes only the Total Estimated Costs (TEC) and does not address pre-Title I activities, life cycle costs or other expenses not specifically shown in the estimate.

Labor rates are based on current Site Stabilization Agreement rates.

G&A have been applied at the rate of 27 percent per fiscal year.

Prime subcontractor's markup fee and bond costs have been added to the estimate and are rolled up in the total estimated ROM costs.

Lockheed Martin Idaho Technologies Co.
Rev. 6-96

COST ESTIMATE SUMMARY

PROJECT NAME: WAG 3 - INT. TANK FARM ACTION (CONC. OPTION #2)
LOCATION 1: INTEC - TANK FARM
REC TOR: L.DAVISON

TYPE OF ESTIMATE: ROM
PROJECT NO: 2960
PREPARED BY: HARRIS/MITCHELL
REPORT NAME: Cost Estimate Summary

DATE: 06-Oct-1999
TIME: 14:11:13
CHECKED BY: _____
APPR'D BY: _____

Element	Cost Estimate Element	Total Unescalated	Escalation	Total Incl Escalation
1.3	CONSTRUCTION			>> $1,669,617
1.3.1	GENERAL CONDITIONS	176,382	8,819	185,201
1.3.2	SITEWORK	241,778	12,089	253,867
1.3.3	CONCRETE	1,056,991	52,850	1,109,841
1.3.7	THERMAL & MOISTURE PROTECTION	114,960	5,748	120,708
1.4	GOVERNMENT FURNISHED EQUIP.			>> $0
1.4.1	GOVERNMENT FURNISHED EQUIP.	0	0	0
1.5	G&A/PIF			>> $271,588
1.5.1	G&A/PIF ADDER	258,655	12,933	271,588
1.5.2	PROCUREMENT FEES	47,703	2,385	>> $50,088
	SUBTOTAL INCLUDING ESCALATION	1,896,469	94,824	>> $1,991,293
	PROJECT CONTINGENCY			
	MANAGEMENT RESERVE			>> $199,129
	CONTINGENCY			>> $446,623
	TOTAL ESTIMATED COST			>> $2,637,045

PROJECT COST PARAMETERS

EDI AS A % OF CONST. + GFE= *0.00%*

CONTINGENCY= *32.43%*

Lockheed Martin Idaho Technologies Co.
Rev 6-96

DETAILED COST ESTIMATE SHEET

PROJECT NAME: WAG 3 - INT. TANK FARM ACTION (CONC. OPTION #2)
LOCATION 1: INTEC - TANK FARM
REQUESTOR: L.DAVISON

TYPE OF ESTIMATE: ROM
PROJECT NO.: 2960
PREPARED BY: HARRIS/MITCHELL

DATE 06-Oct-1999
TIME: 14:11:19
REPORT NAME: Detail Cost Estimate Sheet

CODE	DESCRIPTION	QTY	UOM	MATL UNIT COST	CREW SUB	UNIT LAB HOURS	TOTAL LAB HRS	LABOR	CONST. EQUIP.	MAT'L	S/C (OTHER 1)	TOTAL COST
1.3.1	GENERAL CONDITIONS											
	Non-working Supervision	18	WKS		SUPR GEN	40.000	736	29,440	1,000			30,440
	Equipment Mobilization	1	LS		GEN	0.000			10,000			10,000
	Contamination Boxes	20	Each		GEN	0.000					10,000	10,000
	Safety and Site Specific Training (30 persons)	60	HRS		LABR GEN	30.000	1,800	54,162				54,162
	Const. Aids: Barricades and Safety Devices	1	LS		GEN	0.000			1,000		3,000	4,000
	Jobsite Layout and Survey (3 person crew)	3	WKS		SURV GEN	120.000	360	11,246				11,246
	Layout and Survey Equipment (1 , 3 person crew)	120	HRS		GEN	0.000			3,000			3,000
	Punch List and Project Closeout	1	LS		CARP GEN	40.000	40	1,386				1,386
	Decontamination and Demobilization (man hrs)	1	LS		CARP GEN	285.000	285	9,872	1,000		1,000	11,872
	GENERAL CONDITIONS S/T						3,221	$106,106	$16,000		$14,000	$136,106
1.3.2	SITEWORK											
	Engineered Bridges at Duct Banks	5	Each		IRON GEN	30.000	150	6,024	1,000		2,500	9,524
	Move Each Bridge 3 times	15	moves		IRON GEN	2.000	30	1,205			1,125	2,330
	Remove and Dispose of Bridges	5	Each		IRON GEN	2.000	10	402			125	527
	Regrade Site w/Equipment	60,000	SF		LABR GEN	0.010	600	18,054			1,200	19,254

Lockheed Mar... ...aho Technologies Co.
Rev 6-96

DETAILED COST ESTIMATE SHEET

PROJECT NAME: WAG 3 - INT. TANK FARM ACTION (CONC. OPTION #2)
LOCATION 1: INTEC - TANK FARM
REQUESTOR: L.DAVISON

TYPE OF ESTIMATE: ROM
PROJECT NO.: 2960
PREPARED BY: HARRIS/MITCHELL

DATE 06-Oct-1999
TIME: 14:11:19
REPORT NAME: Detail Cost Estimate Sheet

CODE	DESCRIPTION	QTY	UOM	MATL UNIT COST	CREW SUB	UNIT LAB HOURS	TOTAL LAB HRS	LABOR	CONST. EQUIP.	MAT'L	S/C (OTHER 1)	TOTAL COST
1.3.2	SITEWORK											
	Regrade Site w/ Hand Labor and Equipment	140,000	SF		LABR GEN	0.020	2,800	84,252			1,400	85,652
	Asphalt Emulsion	217,000	SF		CARP GEN	0.002	434	15,034			54,250	69,284
	SITEWORK S/T						4,024	$124,970	$1,000		$60,600	$186,570
1.3.3	CONCRETE											
	Furnish, Place & Finish Conc Slabs w/equip @ 4"	1,568	CY	75.00	CONC CONC	2.500	3,920	129,674	13,406	117,600		260,680
	Furnish, Place & Finish Conc Slabs w/hand @ 4"	419	CY	75.00	CONC CONC	3.500	1,467	48,512	3,415	31,425		83,352
	Furnish, Place & Finish Conc Slabs w/Equip @ 8"	1,704	CY	75.00	CONC CONC	2.000	3,408	112,737	13,819	127,800		254,356
	Wire Mesh in Concrete Slab	250,000	SF	0.30	CONC CONC	0.003	750	24,810		75,000		99,810
	Waterstop	22,000	LF	1.00	CONC CONC	0.008	176	5,822		22,000		27,822
	CONCRETE S/T						9,721	$321,554	$30,641	$373,825		$726,020
1.3.7	THERMAL & MOISTURE PROTECTION											
	Flash around Penetrations	1	LS	35,000.00	CARP GEN	1500.00	1,500	51,960		35,000		86,960
	THERMAL & MOISTURE PROTECTION S/T						1,500	$51,960		$35,000		$86,960
1.4.1	GOVERNMENT FURNISHED EQUIP.											

Lockheed Martin Idaho Technologies Co.
Rev 6-96

DETAILED COST ESTIMATE SHEET

PROJECT NAME: WAG 3 - INT. TANK FARM ACTION (CONC. OPTION #2)
LOCATION 1: INTEC - TANK FARM
REQUESTOR: L.DAVISON

TYPE OF ESTIMATE: ROM
PROJECT NO.: 2960
PREPARED BY: HARRIS/MITCHELL

DATE 06-Oct-1999
TIME: 14:11:19
REPORT NAME: Detail Cost Estimate Sheet

CODE	DESCRIPTION	QTY	UOM	MATL UNIT COST	CREW SUB	UNIT LAB HOURS	TOTAL LAB HRS	LABOR	CONST. EQUIP.	MAT'L	S/C (OTHER 1)	TOTAL COST
1.4.1	GOVERNMENT FURNISHED EQUIP.											
	GOVERNMENT FURNISHED EQUIP. S/T						0					
1.5.1	G&A/PIF ADDER											
	Construction G&A - Year One	1	Lot		LMITCO	0.000					153,395	153,395
	Performance Incentive Factor (PIF) - Year One	1	Lot		LMITCO	0.000					105,260	105,260
	G&A/PIF ADDER S/T						0				$258,655	$258,655
	PROJECT SUBTOTAL						18,466	$604,591	$47,641	$408,825	$333,255	$1,394,311

Lockheed M... Idaho Technologies Co.

CONTRACTOR MARKU... ...UTION REPORT

PROJECT: WAG 3 - INT. TANK FARM
ACTION (CONC. OPTION #2)
LOCATION: INTEC - TANK FARM
ESTIMATOR: HARRIS/MITCHELL
CLIENT: L.DAVISON

DATE: October 6, 1999
ESTTYPE: ROM
PROJECT NO: 2960

CONTRACTOR		LABOR HOURS	LABOR	MATERIAL	EQUIPMENT	OTHERS	SUBTOTAL	% MARKUP	% DIRECT COST	% TOTAL COST
PRIME CONTRACTOR			$0	$0	$0	$0	$0		0.00%	0.00%
TOTAL FOR PRIME CONTRACTOR		0	*$0*	*$0*	*$0*	*$0*	*$0*	***.**%		
CONCRETE CONTRACTOR - CONC			$321,554	$392,516	$30,641	$0	$744,711		64.42%	46.83%
PROFITS	10.00%		$32,155	$39,252	$3,064	$0	$74,471	10.00%		
OVERHEADS	15.00%		$53,056	$64,765	$5,056	$0	$122,877	16.50%		
TOTAL FOR CONCRETE CONTRACTOR - CONC		9,721	*$406,766*	*$496,533*	*$38,760*	*$0*	*$942,060*	26.50%		
GENERAL CONTRACTOR - GEN			$283,037	$36,750	$17,000	$74,600	$411,387		35.58%	25.87%
PROFIT	10.00%		$28,304	$3,675	$1,700	$7,460	$41,139	10.00%		
OVERHEADS	5.00%		$15,567	$2,021	$935	$4,103	$22,626	5.50%		
TOTAL FOR GENERAL CONTRACTOR - GEN		8,745	*$326,907*	*$42,446*	*$19,635*	*$86,163*	*$475,152*	15.50%		
TOTAL DIRECT COST		**18,466**	**$604,591**	**$429,266**	**$47,641**	**$74,600**	**$1,156,098**		**100.00%**	
TOTAL SUBCONTRACTOR MARKUPS			**$129,083**	**$109,713**	**$10,755**	**$11,563**	**$261,113**			**16.42%**
TOTAL COST TO PRIME			**$733,673**	**$538,979**	**$58,396**	**$86,163**	**$1,417,211**			
PRIME CONTRACTOR MARKUP	**12.20%**		**$89,508**	**$65,755**	**$7,124**	**$10,512**	**$172,900**			**10.87%**
TOTAL PROJECT COST			**$823,181**	**$604,735**	**$65,520**	**$96,675**	**$1,590,111**			

Lockheed Martin Idaho Technologies Co.

CONTINGENCY ANALYSIS

ROJECT NAME: WAG 3 - INT. TANK FARM ACTION (CONC. OPTION #2)
OCATION 1: INTEC - TANK FARM
EQUESTOR: L.DAVISON

TYPE OF ESTIMATE: ROM
PROJECT NO: 2960
PREPARED BY: HARRIS/MITCHELL

DATE: 06-Oct-1999
TIME: 14:11:01

REPORT NAME: Contingency Analysis

				PROBABLE % VARIATION					PROJECT CONTINGENCY		SUMMARY
WBS Element	Cost Estimate Element	Total Cost w/o Contingency	% Total Cost	Prob. % Var. From Est. -	Prob. % Var. From Est. +	Wt. % of Prob. -	Wt. % of Prob. +	Contingency	%	Cost	Total Cost by Element
1.3.1	GENERAL CONDITIONS	176,382	8.86	5	40	0.44	3.54	3.144%	9.70%	62,615	238,997
1.3.2	SITEWORK	241,778	12.14	5	40	0.61	4.86	4.310%	13.29%	85,831	327,609
1.3.3	CONCRETE	1,056,991	53.08	5	35	2.65	18.58	16.455%	50.74%	327,665	1,384,656
1.3.7	THERMAL & MOISTURE PROTECTION	114,960	5.77	5	35	0.29	2.02	1.790%	5.52%	35,637	150,597
1.4.1	GOVERNMENT FURNISHED EQUIP.	0	0.00	0	0	0.00	0.00	0.000%	0.00%	0	0
1.5.1	G&A/PIF ADDER	258,655	12.99	10	40	1.30	5.20	4.546%	14.02%	90,529	349,184
1.5.2	PROCUREMENT FEES	47,703	2.40	10	35	0.24	0.84	0.731%	2.25%	14,549	62,252
	ESCALATION	94,824	4.76	10	35	0.48	1.67	1.452%	4.48%	28,926	123,750
	SUBTOTAL	1,991,293	100.00					32.429%			
	CALCULATED CONTINGENCY	645,752									
	RESULTANT TEC	2,637,045									
	ROUNDED TEC	2,637,045									
	PROJECT CONTINGENCY	645,752						32.43%			
	MANAGEMENT RESERVE	199,129									
	CONTINGENCY	446,623									
	TOTAL ESTIMATED COST	2,637,045								645,752	2,637,045

CONFIDENCE LEVEL AND ASSUMED RISKS:
The Lockheed Martin Idaho Technologies Co. Cost Estimate Contingency Analysis Model is based on the applied contingency and the assumptions upon which the estimate was predicated. The model is applied with a suggested risk level of 18% and a level of confidence of 90% the estimate will fall within the bid range. The Contingency Analysis is based on a weighted average to provide a 90 % probability of underrun and a 10% probability of overrun.

CONTINGENCY ANALYSIS GUIDE BY TYPE OF ESTIMATE
Guidelines established by DOE/FM 50, Cost Estimating Guide, Vol. 6, Cost Guide, and as presented in the INEL Cost Estimating Guide.

PLANNING	20% – 30%
Experimental/Special Conditions	Up to 50%
Conceptual	15% – 25%
Experimental/Special Conditions	Up to 40%
TITLE I	10% – 20%
TITLE II	5% – 15%
TITLE II/AFC	Market Conditions

G & A and PIF Worksheet

Project: INTEC TANK FARM (CONCRETE OPTION #2)

Estimate No.: 6231

Estimator: T.R MITCHELL

Date: 10/6/99

Total Construction Cost	$	2,270,983
Construction Procurement Fee - 3%	$	68,129
Total GFE Cost	$	-
GFE Procurement Fee - 3%	$	-

Construction Cost

Construction Cost - Year 1	$	2,270,983		
GFE Cost - Year 1	$	-		
Subtotal	$	2,270,983	$	2,270,983

G & A @ 27% With A $500,000 Construction Ceiling ($135,000)

			G & A		Amount
Construction Cost - Year 1	$	2,270,983	27%	$	135,000
Procurement Cost	$	68,129	27%	$	18,395
GFE Cost - Year 1	$	-	27%	$	-
GFE Procurement Cost	$	-	27%	$	-
Subtotal				$	153,395

$	153,395

Performance Incentive Factor (PIF) @ 4.5% - No Ceiling

			PIF		
Construction Cost - Year 1	$	2,270,983	4.5%	$	102,194
Procurement Cost	$	68,129	4.5%	$	3,066
GFE Cost - Year 1	$	-	4.5%	$	-
GFE Procurement Cost	$	-	4.5%	$	-
Subtotal				$	105,260

$	105,260

Total Adders $	$	258,655
Total Cost	$	2,529,638
Total Adder %		11%

Lockheed Martin Idaho Technologies Company

COST ESTIMATE SUPPORT DATA RECAPITULATION

Project Title: INTEC INTERIM TANK FARM ACTION
Estimator: J. D. Folker / T.R.Mitchell
Date: October 6, 1999
Estimate Type: Planning
File: 2960
Approved By:

I. **SCOPE OF WORK:** *Brief description of the proposed project.*

OPTION #3
INSTA COAT SPRAY ON PRODUCT

The scope of work includes constructing surface water drainage by placing Insta Coat Spray On Product over approximately a two hundred thousand square foot area site at the Tank Farm. The purpose for this procedure is to reduce water infiltration to contaminated soil at the Tank Farm Area (TFA). The surface water will be drained off the site area by way of existing drainage ditches and sloped areas. This process will be accomplished by placing one fourth inch thick (1/4") coat of Insta Coat over the area, In order to accomplish the above process considerable site re-grading and/or reshaping the existing area will be required.

Duct banks and other penetrations should be flashed with a pre-designed, pre-engineered flashing material.

In-as-much as this is a Rough Order of Magnitude (ROM) type estimate, it is to be understood there must be considerable Engineering input.

II. **BASIS OF THE ESTIMATE:** *Drawings, Design Report, Engineers Notes and/or other documentation upon which the estimate is originated.*

Discussions and verbal coordination with Lee Davison (Project Manager), Peggy Jessmore (Assistant to the Project Manager), and a walk-down at the site with Dave Mackovec (Facility Engineer).). Quote's for asphalt were obtained from Rance Bair at Desert Sage. Insta Coat Spray on quotes were obtained from Tom Nachtman at New Waste Concepts Inc. Quotes for the Sprung Structure were obtained from Paul Shriver at Sprung Instant Structures.

III. **ASSUMPTIONS:** *Conditions statements accepted or supposed true without proof of demonstration. An assumption has a direct impact on total estimated cost.*

The following issues have been assumed:

1. All work will be competitively bid and performed by a prime subcontractor with specialty work performed by lower tier subcontractors as needed.
2. Non-working supervision will be required.
3. Access to and from the work area for personnel and any equipment will be made available.
4. Maintenance and Operations (M&O) will perform design and construction management.
5. Construction work for this project will be performed during a standard 40-hour week with no overtime allowances.
6. A construction period not to exceed four months, including mobilization, training, decontamination, and demobilization has been assumed.
7. The concrete process cannot be accomplished during wet or cold weather.
8. All personnel will require initial or refresher training. An average of 40 hours per person has been allowed in this estimate.
9. Half time Radiological Control Technician (RCT) (paid by M&O) has been assumed.
10. Electrical power for this project will be made available within 100 feet of the work area paid by M & O.
11. There are no major mechanical, plumbing, or electrical additions or modifications required. It is further assumed that piping or other mechanical utilities will not be affected by this work.
12. Any demolition material or soils will be disposed at the ICPP Low-Level Waste stockpile area.
13. M&O will furnish any and all hot boxes needed to dispose of any and all hot area soil that will require removal.
14. Costs for collecting and hauling off up to 20 boxes of soil has been figured in this estimate. It is further assumed that the haul distance will not exceed five (5) miles or will be disposed of at the ICPP Low Level Waste stockpile area.
15. Any material within the confines of proposed site area that will need to be hauled from the site would require a hazardous waste determination.
16. Any hazardous/contaminated area that will require disposal will be surveyed located and marked prior to start of construction by M&O.
17. Sprinkling of the site as needed will control any windblown contamination, and the water source is available at the site at no cost to this estimate.
18. Personnel Protective Equipment (PPE) that will be required will be furnished at no cost, by M & O.
19. Work being completed inside the TFA fence will not require any RAD equipment or controls except those few areas identified by survey.
20. All major construction equipment, other than small tools and expendables can be decontaminated on site and recovered. No cost have been included for replacement of equipment in this estimate.

21. The extent of the concrete area of this project has been determined as being five (5) acres and no allowance has been given for minor boxes and/or protrusions for reduction of scope in these areas.
22. Adjustments for labor productivity are assumed to be adequate for decreased output, downtime, specific job site orientation, and other factors based on anticipated on-site conditions.
23. Approximately 10 to15 percent of the 200,000 square feet area will be accomplished by means of handwork and light tools and equipment. The remaining 85 to 90 percent may be accomplished by more conventional type pumping equipment. There is a need to proceed very carefully as the heavier equipment will not be allowed within the 10 foot restricted areas of existing structures plus there are numerous surface penetrations in these areas.
24. All load-restricted areas will be identified.

IV. CONTINGENCY GUIDELINE IMPLEMENTATION: *The percentage used for contingency as determined by the contingency allowance guidelines can be altered to reflect the type of construction and conditions that may impact the total estimated cost.*

The greatest risk for anticipated cost increases lies in the potential for encountering contaminated materials, resulting in considerable increases in labor and equipment costs. Specific facility/area requirements have not at the time of this estimate been finalized, and the unknowns associated with surface and subsurface work, with the inherent possibility of encountering differing conditions as existing work is opened up, creating a high potential for increased costs.

The overall rate of contingency is based on the fact that facility requirements could and probably will change. Differing conditions during design or construction could effect costs and regulatory changes could increase requirements associated with the project. Contingency rate is estimated to be approximately 30 percent.

V. OTHER COMMENTS/CONCERNS SPECIFIC TO THE ESTIMATE

The estimate includes only the Total Estimated Costs (TEC) and does not address pre-Title I activities, life cycle costs or other expenses not specifically shown in the estimate.

Labor rates are based on current Site Stabilization Agreement rates.

G&A have been applied at the rate of 27 percent per fiscal year.

Prime subcontractor's markup fee and bond costs have been added to the estimate and are rolled up in the total estimated ROM costs.

Lockheed Martin Idaho Technologies Co.
Rev. 6-96

COST ESTIMATE SUMMARY

PROJECT NAME: WAG 3 - INT.TANK FARM ACTION (INSTA COAT OPTION #3)
LOCATION 1: INTEC - TANK FARM
REC[illegible]TOR: L. DAVISON

TYPE OF ESTIMATE: ROM
PROJECT NO: 2960
PREPARED BY: HARRIS/MITCHELL/FOLK
REPORT NAME: Cost Estimate Summary

DATE: 06-Oct-1999
TIME: 14:16:36
CHECKED BY: _____
APPR'D BY: _____

[illegible] Element	Cost Estimate Element	Total Unescalated	Escalation	Total Incl Escalation
1.3	CONSTRUCTION			>> $1,278,471
1.3.1	GENERAL CONDITIONS	105,461	5,273	110,734
1.3.2	SITEWORK	151,335	7,567	158,902
1.3.7	THERMAL & MOISTURE PROTECTION	960,795	48,040	1,008,835
1.4	GOVERNMENT FURNISHED EQUIP.			>> $58,328
1.4.1	GOVERNMENT FURNISHED EQUIP.	57,750	578	58,328
1.5	G&A/PIF			>> $248,949
1.5.1	G&A/PIF ADDER	237,094	11,855	248,949
1.5.2	PROCUREMENT FEES	38,260	1,844	>> $40,104
	SUBTOTAL INCLUDING ESCALATION	1,550,695	75,157	>> $1,625,852
	PROJECT CONTINGENCY			
	MANAGEMENT RESERVE			>> $162,585
	CONTINGENCY			>> $411,600
	TOTAL ESTIMATED COST			>> $2,200,037

ROJECT COST PARAMETERS

EDI AS A % OF CONST. + GFE= *0.00%*

CONTINGENCY= *35.32%*

Lockheed Martin Idaho Technologies Co.
Rev 6-96

DETAILED COST ESTIMATE SHEET

PROJECT NAME: WAG 3 - INT.TANK FARM ACTION (INSTA COAT OPTION #3)
LOCATION 1: INTEC - TANK FARM
REQUESTOR: L. DAVISON

TYPE OF ESTIMATE: ROM
PROJECT NO.: 2960
PREPARED BY: HARRIS/MITCHELL/FOLK

DATE 06-Oct-1999
TIME: 14:16:42
REPORT NAME: Detail Cost Estimate Sheet

CODE	DESCRIPTION	QTY	UOM	MATL UNIT COST	CREW SUB	UNIT LAB HOURS	TOTAL LAB HRS	LABOR	CONST. EQUIP.	MAT'L	S/C (OTHER 1)	TOTAL COST
1.3.1	GENERAL CONDITIONS											
	Non-working Supervision	22	Days		GEN	0.000					4,400	4,400
	Plane Fair (Round Trip)	1	LS		GEN	0.000					1,000	1,000
	Car Rental	3	WKS		GEN	0.000					735	735
	Motel Rental	3	WKS		GEN	0.000					750	750
	Safety and Site Specific Training (30 persons)	60	Hrs		LABR GEN	30.000	1,800	54,162				54,162
	Jobsite Layout and Survey (3 person crew)	3	WKS		SURV GEN	120.000	360	11,246				11,246
	Layout and Survey Equipment	120	HRS		GEN	0.000			3,000			3,000
	Punch List and Project Closeout	1	LS		CARP GEN	40.000	40	1,386				1,386
	Decontamination and Demobilization (man hrs)	1	LS	1,000.00	Z-7130 LMITCO	100.000	100	4,472	1,000	1,000		6,472
	GENERAL CONDITIONS S/T						2,300	$71,266	$4,000	$1,000	$6,885	$83,151
1.3.2	SITEWORK											
	Engineered Bridges at Duct Banks	5	Each		IRON GEN	30.000	150	6,024	1,000		2,500	9,524
	Move Each Bridge 3 times	15	moves		IRON GEN	2.000	30	1,205			1,125	2,330
	Remove and Dispose of Bridges	5	Each		IRON GEN	2.000	10	402			125	527
	Regrade Site w/Equipment	60,000	SF		LABR GEN	0.010	600	18,054			1,200	19,254

Lockheed Ma[illegible]aho Technologies Co.
Rev 6-96

DETAILED COS[illegible]ATE SHEET

PROJECT NAME: WAG 3 - INT.TANK FARM ACTION (INSTA COAT OPTION #3)
LOCATION 1: INTEC - TANK FARM
REQUESTOR: L. DAVISON

TYPE OF ESTIMATE: ROM
PROJECT NO.: 2960
PREPARED BY: HARRIS/MITCHELL/FOLK

DATE 06-Oct-1999
TIME: 14:16:42
REPORT NAME: Detail Cost Estimate Sheet

CODE	DESCRIPTION	QTY	UOM	MATL UNIT COST	CREW SUB	UNIT LAB HOURS	TOTAL LAB HRS	LABOR	CONST. EQUIP.	MAT'L	S/C (OTHER 1)	TOTAL COST
1.3.2	SITEWORK											
	Regrade Site w/ Hand Labor and Equipment	140,000	SF		LABR GEN	0.020	2,800	84,252			1,400	85,652
	SITEWORK S/T						3,590	$109,936	$1,000		$6,350	$117,286
1.3.7	THERMAL & MOISTURE PROTECTION											
Memo:	Insta Coat (200,000 SF) Vendor Quote	200,000	SF	3.50	GEN	0.000				700,000		700,000
	Install Insta Coat (2 member crew)	2	CREW		ROHE GEN	160.000	320	9,629				9,629
	THERMAL & MOISTURE PROTECTION S/T						320	$9,629		$700,000		$709,629
1.4.1	GOVERNMENT FURNISHED EQUIP.											
Memo:	Spray on Equipment Vendor Quote	1	LS	55,000.00	LMITCO	0.000				55,000		55,000
	GOVERNMENT FURNISHED EQUIP. S/T						0			$55,000		$55,000
1.5.1	G&A/PIF ADDER											
	Construction G&A - Year One	1	Lot		LMITCO	0.000					150,593	150,593
	Performance Incentive Factor (PIF) - Year One	1	Lot		LMITCO	0.000					86,501	86,501
	G&A/PIF ADDER S/T						0				$237,094	$237,094

Lockheed Martin Idaho Technologies Co.
Rev 6-96

DETAILED COST ESTIMATE SHEET

PROJECT NAME: WAG 3 - INT.TANK FARM ACTION (INSTA COAT OPTION #3)
LOCATION 1: INTEC - TANK FARM
REQUESTOR: L. DAVISON

TYPE OF ESTIMATE: ROM
PROJECT NO.: 2960
PREPARED BY: HARRIS/MITCHELL/FOLK

DATE 06-Oct-1999
TIME: 14:16:42
REPORT NAME: Detail Cost Estimate Sheet

CODE	DESCRIPTION	QTY	UOM	MATL UNIT COST	CREW SUB	UNIT LAB HOURS	TOTAL LAB HRS	LABOR	CONST. EQUIP.	MAT'L	S/C (OTHER 1)	TOTAL COST
	PROJECT SUBTOTAL						6,210	$190,831	$5,000	$756,000	$250,329	$1,202,160

Lockheed M[illegible] aho Technologies Co.

CONTRACTOR MARKU[illegible] ION REPORT

PROJECT: [illegible] 3 - INT.TANK FARM ACTION (INSTA COAT OPTION #3)
LOCATION: INTEC - TANK FARM
ESTIMATOR: HARRIS/MITCHELL/FOLKER
CLIENT: L. DAVISON

DATE: October 6, 1999
ESTTYPE: ROM
PROJECT NO: 2960

CONTRACTOR		LABOR HOURS	LABOR	MATERIAL	EQUIPMENT	OTHERS	SUBTOTAL	% MARKUP	% DIRECT COST	% TOTAL COST
PRIME CONTRACTOR			$0	$0	$0	$0	$0		0.00%	0.00%
TOTAL FOR PRIME CONTRACTOR		0	*$0*	*$0*	*$0*	*$0*	*$0*	***.**%		
GENERAL CONTRACTOR - GEN			$186,359	$735,000	$4,000	$13,235	$938,594		99.31%	77.09%
BOND	2.00%		$3,727	$14,700	$80	$265	$18,772	2.00%		
PROFIT	10.00%		$19,009	$74,970	$408	$1,350	$95,737	10.20%		
OVERHEADS	15.00%		$31,364	$123,700	$673	$2,227	$157,965	16.83%		
TOTAL FOR GENERAL CONTRACTOR - GEN		6,110	*$240,459*	*$948,371*	*$5,161*	*$17,077*	*$1,211,068*	29.03%		
LMITCO - LMITCO			$4,472	$1,050	$1,000	$0	$6,522		0.69%	0.54%
	%		$0	$0	$0	$0	$0	0.00%		
TOTAL FOR LMITCO - LMITCO		100	*$4,472*	*$1,050*	*$1,000*	*$0*	*$6,522*			
TOTAL DIRECT COST		**6,210**	**$190,831**	**$736,050**	**$5,000**	**$13,235**	**$945,116**		**100.00%**	
TOTAL SUBCONTRACTOR MARKUPS			**$54,100**	**$213,371**	**$1,161**	**$3,842**	**$272,474**			22.38%
TOTAL COST TO PRIME			**$244,931**	**$949,421**	**$6,161**	**$17,077**	**$1,217,590**			
PRIME CONTRACTOR MARKUP	**0.00%**		**$0**	**$0**	**$0**	**$0**	**$0**			**0.00%**
TOTAL PROJECT COST			**$244,931**	**$949,421**	**$6,161**	**$17,077**	**$1,217,590**			

Lockheed Martin Idaho Technologies Co.

CONTINGENCY ANALYSIS

PROJECT NAME: WAG 3 - INT.TANK FARM ACTION (INSTA COAT OPTION #3)
LOCATION 1: INTEC - TANK FARM
REQUESTOR: L. DAVISON

TYPE OF ESTIMATE: ROM
PROJECT NO: 2960
PREPARED BY: HARRIS/MITCHELL/FOLK

DATE: 06-Oct-1999
TIME: 14:16:31

REPORT NAME: Contingency Analysis

PROBABLE % VARIATION									PROJECT CONTINGENCY		SUMMARY
WBS Element	Cost Estimate Element	Total Cost w/o Contingency	% Total Cost	Prob. % Var. From Est. -	Prob. % Var. From Est. +	Wt. % of Prob. -	Wt. % of Prob. +	Contingency	%	Cost	Total Cost by Element
1.3.1	GENERAL CONDITIONS	105,461	6.49	5	45	0.32	2.92	2.595%	7.35%	42,184	147,645
1.3.2	SITEWORK	151,335	9.31	5	45	0.47	4.19	3.723%	10.54%	60,534	211,869
1.3.7	THERMAL & MOISTURE PROTECTION	960,795	59.09	10	40	5.91	23.64	20.683%	58.57%	336,278	1,297,073
1.4.1	GOVERNMENT FURNISHED EQUIP.	57,750	3.55	10	35	0.36	1.24	1.083%	3.07%	17,614	75,364
1.5.1	G&A/PIF ADDER	237,094	14.58	10	40	1.46	5.83	5.104%	14.45%	82,983	320,077
1.5.2	PROCUREMENT FEES	38,260	2.35	10	35	0.24	0.82	0.718%	2.03%	11,669	49,929
	ESCALATION	75,157	4.62	10	35	0.46	1.62	1.410%	3.99%	22,923	98,080
	SUBTOTAL	1,625,852	100.00					35.316%			
	CALCULATED CONTINGENCY	574,185									
	RESULTANT TEC	2,200,037									
	ROUNDED TEC	2,200,037									
	PROJECT CONTINGENCY	574,185						35.32%			
	MANAGEMENT RESERVE	162,585									
	CONTINGENCY	411,600									
	TOTAL ESTIMATED COST	2,200,037								574,185	2,200,037

IDENCE LEVEL AND ASSUMED RISKS:

Lockheed Martin Idaho Technologies Co. Cost Estimate Contingency Analysis Model is based on the applied contingency and the assumptions upon which the estimate was predicated. The model is applied with a suggested risk level of 18% and a level of confidence of 90% the estimate will fall within the bid range. The Contingency Analysis is based on a weighted average to provide a 90 % probability of underrun and a 10% probability of overrun.

CONTINGENCY ANALYSIS GUIDE BY TYPE OF ESTIMATE

Guidelines established by DOE/FM 50, Cost Estimating Guide, Vol. 6, Cost Guide, and as presented in the INEL Cost Estimating Guide.

PLANNING	20% – 30%
Experimental/Special Conditions	Up to 50%
Conceptual	15% – 25%
Experimental/Special Conditions	Up to 40%
TITLE I	10% – 20%
TITLE II	5% – 15%
TITLE II/AFC	Market Conditions

Lockheed Martin Idaho Technologies Company

COST ESTIMATE SUPPORT DATA RECAPITULATION

Project Title: WAG 3 INTERIM TANK FARM ACTION
Estimator: J. D. Folker / T.R. Mitchell
Date: October 6, 1999
Estimate Type: ROM
File: 2960
Approved By:

I. **SCOPE OF WORK:** *Brief description of the proposed project.*

OPTION #5
ASPHALT, SPRAY ON PRODUCT AND A SPRUNG STRUCTURE COMBINATION

The scope of work includes constructing surface water drainage by placing one forth of an inch (1/4") of Insta Coat Spray On Product over approximately a 123,000 square foot area. Also included would be approximately a 60,000 square foot area of asphalt paving three inches (3") thick, and the installation of a 16,800 square foot Sprung structure over the area at the Tank Farm. The purpose for this procedure is to reduce water infiltration to contaminated soil at the Tank Farm Area (TFA). The surface water will be drained off the site area by way of existing drainage ditches and sloped areas.

In order to accomplish the above process, considerable site re-grading and/or reshaping the existing area will be required.

Duct banks and other penetrations should be flashed with a pre-designed, pre-engineered flashing material.

In-as-much as this is a Rough Order of Magnitude (ROM) type estimate, it is to be understood there must be considerable Engineering input.

II. **BASIS OF THE ESTIMATE:** *Drawings, Design Report, Engineers Notes and/or other documentation upon which the estimate is originated.*

Discussions and verbal coordination with Lee Davison (Project Manager), Peggy Jessmore (Assistant to the Project Manager), and a walk-down at the site with Dave Mackovec (Facility Engineer).). Quote's for asphalt were obtained from Rance Bair at Desert Sage. Insta Coat Spray on quotes were obtained from Tom Nachtman at New Waste Concepts Inc. Quotes for the Sprung Structure were obtained from Paul Shriver at Sprung Instant Structures.

III. **ASSUMPTIONS:** *Conditions statements accepted or supposed true without proof of demonstration. An assumption has a direct impact on total estimated cost.*

The following issues have been assumed:

1. All work will be competitively bid and performed by a prime subcontractor with specialty work performed by lower tier subcontractors as needed.
2. Non-working supervision will be required.
3. Access to and from the work area for personnel and any equipment will be made available.
4. Maintenance and Operations (M&O) will perform design and construction management.
5. Construction work for this project will be performed during a standard 40-hour week with no overtime allowances.
6. A construction period not to exceed four months, including mobilization, training, decontamination, and demobilization has been assumed.
7. The concrete process cannot be accomplished during wet or cold weather.
8. All personnel will require initial or refresher training. An average of 40 hours per person has been allowed in this estimate.
9. Half time Radiological Control Technician (RCT) (paid by M&O) has been assumed.
10. Electrical power for this project will be made available within 100 feet of the work area paid by M & O.
11. There are no major mechanical, plumbing, or electrical additions or modifications required. It is further assumed that piping or other mechanical utilities will not be affected by this work.
12. Any demolition material or soils will be disposed at the ICPP Low-Level Waste stockpile area.
13. M&O will furnish any and all hot boxes needed to dispose of any and all hot area soil that will require removal.
14. Costs for collecting and hauling off up to 20 boxes of soil has been figured in this estimate. It is further assumed that the haul distance will not exceed five (5) miles or will be disposed of at the ICPP Low Level Waste stockpile area.
15. Any material within the confines of proposed site area that will need to be hauled from the site would require a hazardous waste determination.
16. Any hazardous/contaminated area that will require disposal will be surveyed located and marked prior to start of construction by M&O.
17. Sprinkling of the site as needed will control any windblown contamination, and the water source is available at the site at no cost to this estimate.
18. Personnel Protective Equipment (PPE) that will be required will be furnished at no cost by M & O.
19. Work being completed inside the TFA fence will not require any RAD equipment or controls except those few areas identified by survey.

20. All major construction equipment, other than small tools and expendables can be decontaminated on site and recovered. No cost have been included for replacement of equipment in this estimate.
21. The extent of the concrete area of this project has been determined as being five (5) acres and no allowance has been given for minor boxes and/or protrusions for reduction of scope in these areas.
22. Adjustments for labor productivity are assumed to be adequate for decreased output, downtime, specific job site orientation, and other factors based on anticipated on-site conditions.
23. Approximately 10 to15 percent of the 200,000 square feet area will be accomplished by means of handwork and light tools and equipment. The remaining 85 to 90 percent may be accomplished by more conventional type pumping equipment. There is a need to proceed very carefully as the heavier equipment will not be allowed within the 10 foot restricted areas of existing structures plus there are numerous surface penetrations in these areas.
24. All load-restricted areas will be identified.

IV. CONTINGENCY GUIDELINE IMPLEMENTATION: *The percentage used for contingency as determined by the contingency allowance guidelines can be altered to reflect the type of construction and conditions that may impact the total estimated cost.*

The greatest risk for anticipated cost increases lies in the potential for encountering contaminated materials, resulting in considerable increases in labor and equipment costs. Specific facility/area requirements have not at the time of this estimate been finalized, and the unknowns associated with surface and subsurface work, with the inherent possibility of encountering differing conditions as existing work is opened up, creating a high potential for increased costs.

The overall rate of contingency is based on the fact that facility requirements could and probably will change. Differing conditions during design or construction could effect costs and regulatory changes could increase requirements associated with the project. Contingency rate is estimated to be approximately 30 percent.

V. OTHER COMMENTS/CONCERNS SPECIFIC TO THE ESTIMATE

The estimate includes only the Total Estimated Costs (TEC) and does not address pre-Title I activities, life cycle costs or other expenses not specifically shown in the estimate.

Labor rates are based on current Site Stabilization Agreement rates.

G&A have been applied at the rate of 27 percent per fiscal year.

Prime subcontractor's markup fee and bond costs have been added to the estimate and are rolled up in the total estimated ROM costs.

Lockheed Martin Idaho Technologies Co.
Rev. 6-96

COST ESTIMATE SUMMARY

PROJECT NAME: WAG 3 - INT. TANK FARM ACTION
INSTA COAT/PAV./SPRUNG OPTION
LOCATION 1: INTEC - TANK FARM
REGISTOR: L. DAVISON

TYPE OF ESTIMATE: ROM
PROJECT NO: 2960
PREPARED BY: HARRIS/MITCHELL/FOLK
REPORT NAME: Cost Estimate Summary

DATE: 06-Oct-1999
TIME: 14:35:02
CHECKED BY: _____
APPR'D BY: _____

Element	Cost Estimate Element	Total Unescalated	Escalation	Total Incl Escalation
1.3	CONSTRUCTION			>> $1,787,167
1.3.1	GENERAL CONDITIONS	32,690	1,634	34,324
1.3.2	SITEWORK	463,422	23,171	486,593
1.3.7	THERMAL & MOISTURE PROTECTION	666,255	33,313	699,568
1.3.10	SPECIALTIES	539,697	26,985	566,682
1.4	GOVERNMENT FURNISHED EQUIP.			>> $33,600
1.4.1	GOVERNMENT FURNISHED EQUIP.	33,600	0	33,600
1.5	G&A/PIF			>> $254,220
1.5.1	G&A/PIF ADDER	242,114	12,106	254,220
1.5.2	PROCUREMENT FEES	52,070	2,553	>> $54,623
	SUBTOTAL INCLUDING ESCALATION	2,029,848	99,762	>> $2,129,610
	PROJECT CONTINGENCY			
	MANAGEMENT RESERVE			>> $212,961
	CONTINGENCY			>> $522,213
	TOTAL ESTIMATED COST			>> $2,864,784

PROJECT COST PARAMETERS

EDI AS A % OF CONST. + GFE= *0.00%*

CONTINGENCY= *34.52%*

Lockheed Martin Idaho Technologies Co.
Rev 6-96

DETAILED COST ESTIMATE SHEET

PROJECT NAME: WAG 3 - INT. TANK FARM ACTION
INSTA COAT/PAV./SPRUNG OPTION #5
LOCATION 1: INTEC - TANK FARM
REQUESTOR: L. DAVISON

TYPE OF ESTIMATE: ROM
PROJECT NO.: 2960
PREPARED BY: HARRIS/MITCHELL/FOLK

DATE 06-Oct-1999
TIME: 14:35:08
REPORT NAME: Detail Cost Estimate Sheet

CODE	DESCRIPTION	QTY	UOM	MATL UNIT COST	CREW SUB	UNIT LAB HOURS	TOTAL LAB HRS	LABOR	CONST. EQUIP.	MAT'L	S/C (OTHER 1)	TOTAL COST
1.3.1	GENERAL CONDITIONS											
	Non-working Supervision	10	Days		GEN	0.000					2,000	2,000
	Plane Fair (Round Trip)	1	LS		GEN	0.000					1,000	1,000
Memo:	Car Rental Per Local Vendor Rates	2	WKS		GEN	0.000					490	490
Memo:	Motel Rental Per Local Vendor Rates	2	WKS		GEN	0.000					500	500
	Safety and Site Specific Training	60	Hrs		LABR GEN	0.000						
	Jobsite Layout and Survey (3 person crew)	3	WKS		SURV GEN	120.000	360	11,246				11,246
	Layout and Survey Equipment (1 , 3 person crew)	120	HRS		GEN	0.000			3,000			3,000
	Punch List and Project Closeout	1	LS		CARP GEN	40.000	40	1,386				1,386
	Decontamination and Demobilization (man hrs)	1	LS		Z-7130 LMITCO	100.000	100	4,472	1,000		1,000	6,472
	GENERAL CONDITIONS S/T						500	$17,104	$4,000		$4,990	$26,094
1.3.2	SITEWORK											
	Engineered Bridges at Duct Banks	5	Each	500.00	IRON GEN	30.000	150	6,024	1,000	2,500		9,524
	Move Each Bridge 3 times	15	moves	75.00	IRON GEN	2.000	30	1,205		1,125		2,330
	Remove and Dispose of Bridges	5	Each	25.00	IRON GEN	2.000	10	402		125		527
	Regrade Site w/Equipment	60,000	SF	0.02	LABR GEN	0.010	600	18,054		1,200		19,254
	Regrade Site w/ Hand Labor and Equipment	140,000	SF	0.01	LABR GEN	0.020	2,800	84,252		1,400		85,652

Lockheed Mar... aho Technologies Co.
Rev 6-96

DETAILED COST ES...ATE SHEET

PROJECT NAME: WAG 3 - INT. TANK FARM ACTION
INSTA COAT/PAV./SPRUNG OPTION #5
LOCATION 1: INTEC - TANK FARM
REQUESTOR: L. DAVISON

TYPE OF ESTIMATE: ROM
PROJECT NO.: 2960
PREPARED BY: HARRIS/MITCHELL/FOLK

DATE 06-Oct-1999
TIME: 14:35:08
REPORT NAME: Detail Cost Estimate Sheet

CODE	DESCRIPTION	QTY	UOM	MATL UNIT COST	CREW SUB	UNIT LAB HOURS	TOTAL LAB HRS	LABOR	CONST. EQUIP.	MAT'L	S/C (OTHER 1)	TOTAL COST
1.3.2	SITEWORK											
	Asphalt Paving	60,000	SF			0.000					240,000	240,000
Memo:	Local Vendor Quote				GEN							
	SITEWORK S/T						3,590	$109,936	$1,000	$6,350	$240,000	$357,286
1.3.7	THERMAL & MOISTURE PROTECTION											
	Insta Coat	123,200	SF	3.50		0.000			55,440	431,200		486,640
					GEN							
	Install Insta Coat (2 member crew)	2	Crew		ROHE	98.400	197	5,922				5,922
					GEN							
	THERMAL & MOISTURE PROTECTION S/T						197	$5,922	$55,440	$431,200		$492,562
1.3.10	SPECIALTIES											
	Sprung Structure	16,800	SF			0.000					336,000	336,000
Memo:	Vendor Quote				SPEC							
	Transport from Salt Lake City Utah	1	LOAD			0.000					500	500
					SPEC							
	On Site Technical Consultant	12	DAY			0.000					2,100	2,100
					SPEC							
	Erection Crew (7 member crew)	12	DAY		LABR	56.000	672	20,220				20,220
					SPEC							
	Crane Rental	98	HRS			0.000					11,760	11,760
					SPEC							
	SPECIALTIES S/T						672	$20,220			$350,360	$370,580
1.4.1	GOVERNMENT FURNISHED EQUIP.											

Lockheed Martin Idaho Technologies Co.
Rev 6-96

DETAILED COST ESTIMATE SHEET

PROJECT NAME: WAG 3 - INT. TANK FARM ACTION
INSTA COAT/PAV./SPRUNG OPTION #5
LOCATION 1: INTEC - TANK FARM
REQUESTOR: L. DAVISON

TYPE OF ESTIMATE: ROM
PROJECT NO.: 2960
PREPARED BY: HARRIS/MITCHELL/FOLK

DATE 06-Oct-1999
TIME: 14:35:08
REPORT NAME: Detail Cost Estimate Sheet

CODE	DESCRIPTION	QTY	UOM	MATL UNIT COST	CREW SUB	UNIT LAB HOURS	TOTAL LAB HRS	LABOR	CONST. EQUIP.	MAT'L	S/C (OTHER 1)	TOTAL COST
1.4.1	GOVERNMENT FURNISHED EQUIP.											
	Spray on Equipment	1	LS	32,000.00		0.000				32,000		32,000
Memo:	Vendor Quote											
	GOVERNMENT FURNISHED EQUIP. S/T						0			$32,000		$32,000
1.5.1	G&A/PIF ADDER											
	Construction G&A - Year One	1	Lot		LMITCO	0.000					144,072	144,072
	Performance Incentive Factor (PIF) - Year One	1	Lot		LMITCO	0.000					98,042	98,042
	G&A/PIF ADDER S/T						0				$242,114	$242,114
	PROJECT SUBTOTAL						4,959	$153,183	$60,440	$469,550	$837,464	$1,520,637

Lockheed M. daho Technologies Co.

CONTRACTOR MARKU TION REPORT

PROJECT: WAG 3 - INT. TANK FARM ACTION
INSTA COAT/PAV./SPRUNG OPTION #5
LOCATION: INTEC - TANK FARM
ESTIMATOR: HARRIS/MITCHELL/FOLKER
CLIENT: L. DAVISON

DATE: October 6, 1999
ESTTYPE: ROM
PROJECT NO: 2960

CONTRACTOR		LABOR HOURS	LABOR	MATERIAL	EQUIPMENT	OTHERS	SUBTOTAL	% MARKUP	% DIRECT COST	% TOTAL COST
PRIME CONTRACTOR			$0	$0	$0	$0	$0		0.00%	0.00%
TOTAL FOR PRIME CONTRACTOR		0	*$0*	*$0*	*$0*	*$0*	*$0*	***.**%		
GENERAL CONTRACTOR - GEN			$128,490	$459,428	$59,440	$243,990	$891,348		70.27%	52.37%
BOND	0.00%		$0	$0	$0	$0	$0	0.00%		
PROFIT	10.00%		$12,849	$45,943	$5,944	$24,399	$89,135	10.00%		
OVERHEADS	5.00%		$7,067	$25,269	$3,269	$13,419	$49,024	5.50%		
TOTAL FOR GENERAL CONTRACTOR - GEN		4,187	*$148,406*	*$530,639*	*$68,653*	*$281,808*	*$1,029,506*	15.50%		
LMITCO - LMITCO			$4,472	$0	$1,000	$1,000	$6,472		0.51%	0.38%
	%		$0	$0	$0	$0	$0	0.00%		
TOTAL FOR LMITCO - LMITCO		100	*$4,472*	*$0*	*$1,000*	*$1,000*	*$6,472*			
SPECIALTY CONTRACTOR - SPEC			$20,220	$0	$0	$350,360	$370,580		29.22%	21.77%
Porfit	10.00%		$2,022	$0	$0	$35,036	$37,058	10.00%		
Overhead	18.00%		$4,004	$0	$0	$69,371	$73,375	19.80%		
TOTAL FOR SPECIALTY CONTRACTOR - SPEC		672	*$26,246*	*$0*	*$0*	*$454,767*	*$481,013*	29.80%		
TOTAL DIRECT COST		**4,959**	**$153,183**	**$459,428**	**$60,440**	**$595,350**	**$1,268,400**		**100.00%**	
TOTAL SUBCONTRACTOR MARKUPS			**$25,942**	**$71,211**	**$9,213**	**$142,226**	**$248,592**			14.61%
TOTAL COST TO PRIME			**$179,124**	**$530,639**	**$69,653**	**$737,576**	**$1,516,992**			
PRIME CONTRACTOR MARKUP	**12.20%**		**$21,853**	**$64,738**	**$8,498**	**$89,984**	**$185,073**			**10.87%**
TOTAL PROJECT COST			**$200,977**	**$595,377**	**$78,151**	**$827,560**	**$1,702,065**			

Lockheed Martin Idaho Technologies Co. **CONTINGENCY ANALYSIS**

PROJECT NAME: WAG 3 - INT. TANK FARM ACTION
INSTA COAT/PAV./SPRUNG OPTION
LOCATION 1: INTEC - TANK FARM
REQUESTOR: L. DAVISON

TYPE OF ESTIMATE: ROM
PROJECT NO: 2960
PREPARED BY: HARRIS/MITCHELL/FOLK

DATE: 06-Oct-1999
TIME: 14:34:57

REPORT NAME: Contingency Analysis

PROBABLE % VARIATION									PROJECT CONTINGENCY		SUMMARY
WBS Element	Cost Estimate Element	Total Cost w/o Contingency	% Total Cost	Prob. % Var. From Est. -	Prob. % Var. From Est. +	Wt. % of Prob. -	Wt. % of Prob. +	Contingency	%	Cost	Total Cost by Element
1.3.1	GENERAL CONDITIONS	32,690	1.54	5	45	0.08	0.69	0.614%	1.78%	13,076	45,766
1.3.2	SITEWORK	463,422	21.76	5	45	1.09	9.79	8.704%	25.21%	185,366	648,788
1.3.7	THERMAL & MOISTURE PROTECTION	666,255	31.29	5	35	1.56	10.95	9.698%	28.09%	206,536	872,791
1.3.10	SPECIALTIES	539,697	25.34	10	40	2.53	10.14	8.870%	25.69%	188,891	728,588
1.4.1	GOVERNMENT FURNISHED EQUIP.	33,600	1.58	10	35	0.16	0.55	0.481%	1.39%	10,248	43,848
1.5.1	G&A/PIF ADDER	242,114	11.37	10	40	1.14	4.55	3.979%	11.53%	84,739	326,853
1.5.2	PROCUREMENT FEES	52,070	2.45	10	35	0.24	0.86	0.746%	2.16%	15,881	67,951
	ESCALATION	99,762	4.68	10	35	0.47	1.64	1.429%	4.14%	30,437	130,199
	SUBTOTAL	2,129,610	100.00					34.522%			
	CALCULATED CONTINGENCY	735,174									
	RESULTANT TEC	2,864,784									
	ROUNDED TEC	2,864,784									
	PROJECT CONTINGENCY	735,174						34.52%			
	MANAGEMENT RESERVE	212,961									
	CONTINGENCY	522,213									
	TOTAL ESTIMATED COST	2,864,784								735,174	2,864,784

CONFIDENCE LEVEL AND ASSUMED RISKS:
The Lockheed Martin Idaho Technologies Co. Cost Estimate Contingency Analysis Model is based on the applied contingency and the assumptions upon which the estimate was predicated. The model is applied with a suggested risk level of 18% and a level of confidence of 90% the estimate will fall within the bid range. The Contingency Analysis is based on a weighted average to provide a 90 % probability of underrun and a 10% probability of overrun.

CONTINGENCY ANALYSIS GUIDE BY TYPE OF ESTIMATE
Guidelines established by DOE/FM 50, Cost Estimating Guide, Vol. 6, Cost Guide, and as presented in the INEL Cost Estimating Guide.

PLANNING	20% – 30%
Experimental/Special Conditions	Up to 50%
Conceptual	15% – 25%
Experimental/Special Conditions	Up to 40%
TITLE I	10% – 20%
TITLE II	5% – 15%
TITLE II/AFC	Market Conditions

INEEL

Idaho National Engineering & Environmental Laboratory

INTEROFFICE MEMORANDUM

Date:	December 15, 1999		
To:	P. J. Jessmore	MS 3953	6-9367
From:	T.R. Mitchell	MS 3655	6-3864
Subject:	WAG 3 INTERIM TANK FARM ACTION - TRM-12-99		

Transmitted herewith is the planning cost estimate for the above referenced project. This Cost Estimate has been completed in the same format as the previous five options as requested, only costs for construction (direct and indirect costs), G&A and PIF allowances, and procurement have been included.

The Total Construction Cost is.....$1,542,000

Please refer to the attached detail, recapitulation and summary sheets for cost breakdowns, descriptions and cost estimating basis.

If you have any questions or comments, please contact me on 526-3864 or e-mail MITCTR.

Attachments

cc: Estimate File #2960-2
J. D. Folker, MS 3655
T. R. Mitchell Letter File

Bechtel BWXT Idaho, LLC

COST ESTIMATE SUPPORT DATA RECAPITULATION

Project Title: WAG 3 INTERIM TANK FARM ACTION
Estimator: T. R. Mitchell
Date: December 15, 1999
Estimate Type: Planning
File: 2960-2
Approved By:

I. **SCOPE OF WORK:** *Brief description of the proposed project.*

The scope of work includes constructing surface water drainage by placing a three (3) inch layer of Road Oyl Resin Modified Emulsion (RME) paving over a five (5) acre site at the Tank Farm. The purpose for this procedure is to reduce water infiltration to contaminated soil at the Tank Farm Area (TFA). The surface water will be drained off the site area by way of existing drainage ditches and sloped areas. This process will be accomplished by considerable site regrading and/or reshaping the existing area.

In the regrading and reshaping process, consideration must be given to the probability that finer material may have to be imported and mixed with courser granular on site material to gain compaction of the Road Oyl asphalt material. Site evaluation by Civil Engineering must be considered as part of this Scope of Work.

Duct banks and other penetrations should be flashed with a pre-designed, pre-engineered flashing material.

In-as-much as this is a Rough Order of Magnitude (ROM) type estimate, it must be understood there will need to be considerable Engineering input.

II. **BASIS OF THE ESTIMATE:** *Drawings, Design Report, Engineers Notes and/or other documentation upon which the estimate is originated.*

Discussions and verbal coordination with Peggy Jessmore (Project Requester), John Folker and Travis Mitchell (Cost Estimators). Quotes for the Road Oyl RME were obtained from Glen Gates at Soil Stabilization Products Company, Inc.

III. **ASSUMPTIONS:** *Conditions statements accepted or supposed true without proof of demonstration. An assumption has a direct impact on total estimated cost.*

The following issues have been assumed:

1. All work will be competitively bid and performed by a prime subcontractor with specialty work performed by lower tier subcontractors as needed.
2. Non-working supervision will be required.

3. Access to and from the work area for personnel and any equipment will be made available.
4. Maintenance and Operations (M&O) will perform design and construction management.
5. Construction work for this project will be performed during a standard 40-hour week with no overtime allowances.
6. A construction period not to exceed four months, including mobilization, training, decontamination, and demobilization has been assumed.
7. All personnel will require initial or refresher training not to exceed an average of 40 hours per person.
8. Half time Radiological Control Technician (RCT) (paid by M&O) has been assumed.
9. Electrical power for this project will be made available within 100 feet of the work area paid by M&O.
10. There are no major mechanical, plumbing, or electrical additions or modifications required. It is further assumed that piping or other mechanical utilities will not be affected by this work.
11. Any demolition material or soils will be disposed of at the ICPP Low-Level Waste stockpile area.
12. M&O will furnish any and all hot boxes needed to dispose of any and all hot area soil that will require removal.
13. Costs for collecting and hauling off up to 20 boxes of soil has been figured in this estimate. It is further assumed that the haul distance will not exceed five (5) miles or will be disposed of at the ICPP Low Level Waste stockpile area.
14. Any material within the confines of proposed site area that will need to be hauled from the site would require a hazardous waste determination.
15. Any hazardous/contaminated area that will require disposal will be surveyed, located, and marked prior to start of construction by M&O.
16. Sprinkling of the site as needed will control any windblown contamination. The water source is available at the site at no cost to this estimate.
17. M&O will furnish personnel protective equipment (PPE) at no cost.
18. Work being completed inside the TFA fence will not require any radiation absorbed dose (RAD) equipment or controls except those few areas identified by survey.
19. All major construction equipment, other than small tools and expendables, can be decontaminated on site and recovered. Costs have not been included for replacement of equipment in this estimate.
20. The extent of the paving area of this project has been determined as being five (5) acres and no allowance has been given for minor boxes and/or protrusions for reduction of scope in these areas.
23. Adjustments for labor productivity are assumed to be adequate for decreased output, downtime, specific job-site orientation, and other factors based on anticipated on site conditions.

24. Approximately 60 to 70 percent of the 200,000 square feet area will be accomplished by means of handwork and light tools and equipment. The remaining 30 to 40 percent may be accomplished by more conventional type equipment. There is a need to proceed very carefully as the heavier equipment will not be allowed within the 10 foot restricted areas of existing structures plus there are numerous surface penetrations in these areas.
25. The load-restricted areas will be identified.

IV. **CONTINGENCY GUIDELINE IMPLEMENTATION:** *The percentage used for contingency as determined by the contingency allowance guidelines can be altered to reflect the type of construction and conditions that may impact the total estimated cost.*

The greatest risk for anticipated cost increases lies in the potential for encountering contaminated materials, resulting in considerable increases in labor and equipment costs. Specific facility area requirements have not, at the time of this estimate, been finalized. The unknowns associated with surface and subsurface work, with the inherent possibility of encountering differing conditions as existing work is opened up, will also create a high potential for increased costs.

The overall rate of contingency is based on the fact that facility requirements could and probably will change. Differing conditions during design or construction could effect costs. Regulatory changes could increase requirements associated with the project. Contingency rate is estimated to be approximately 35 percent.

V. **OTHER COMMENTS/CONCERNS SPECIFIC TO THE ESTIMATE**

The estimate includes only the Total Estimated Costs (TEC) and does not address pre-Title I activities, life cycle costs, or other expenses not specifically shown in the estimate.

Labor rates are based on current Site Stabilization Agreement rates.

The current G&A fee has been included in the estimate at 27% and the PIF fee has been included at 4% of construction costs. Procurement costs have also been included at 3.5% of construction costs.

Costs from the Detailed Cost Estimate sheets are direct costs for material, labor, equipment and special contracts. Costs for corresponding divisions on the cost estimate summary sheet include all applicable indirect costs (overhead, profit, commission on subcontracts, sales tax, and bond).

3. Access to and from the work area for personnel and any equipment will be made available.
4. Maintenance and Operations (M&O) will perform design and construction management.
5. Construction work for this project will be performed during a standard 40-hour week with no overtime allowances.
6. A construction period not to exceed four months, including mobilization, training, decontamination, and demobilization has been assumed.
7. All personnel will require initial or refresher training not to exceed an average of 40 hours per person.
8. Half time Radiological Control Technician (RCT) (paid by M&O) has been assumed.
9. Electrical power for this project will be made available within 100 feet of the work area paid by M&O.
10. There are no major mechanical, plumbing, or electrical additions or modifications required. It is further assumed that piping or other mechanical utilities will not be affected by this work.
11. Any demolition material or soils will be disposed of at the ICPP Low-Level Waste stockpile area.
12. M&O will furnish any and all hot boxes needed to dispose of any and all hot area soil that will require removal.
13. Costs for collecting and hauling off up to 20 boxes of soil has been figured in this estimate. It is further assumed that the haul distance will not exceed five (5) miles or will be disposed of at the ICPP Low Level Waste stockpile area.
14. Any material within the confines of proposed site area that will need to be hauled from the site would require a hazardous waste determination.
15. Any hazardous/contaminated area that will require disposal will be surveyed, located, and marked prior to start of construction by M&O.
16. Sprinkling of the site as needed will control any windblown contamination. The water source is available at the site at no cost to this estimate.
17. M&O will furnish personnel protective equipment (PPE) at no cost.
18. Work being completed inside the TFA fence will not require any radiation absorbed dose (RAD) equipment or controls except those few areas identified by survey.
19. All major construction equipment, other than small tools and expendables, can be decontaminated on site and recovered. Costs have not been included for replacement of equipment in this estimate.
20. The extent of the paving area of this project has been determined as being five (5) acres and no allowance has been given for minor boxes and/or protrusions for reduction of scope in these areas.
23. Adjustments for labor productivity are assumed to be adequate for decreased output, downtime, specific job-site orientation, and other factors based on anticipated on site conditions.

24. Approximately 60 to 70 percent of the 200,000 square feet area will be accomplished by means of handwork and light tools and equipment. The remaining 30 to 40 percent may be accomplished by more conventional type equipment. There is a need to proceed very carefully as the heavier equipment will not be allowed within the 10 foot restricted areas of existing structures plus there are numerous surface penetrations in these areas.
25. The load-restricted areas will be identified.

IV. **CONTINGENCY GUIDELINE IMPLEMENTATION:** *The percentage used for contingency as determined by the contingency allowance guidelines can be altered to reflect the type of construction and conditions that may impact the total estimated cost.*

The greatest risk for anticipated cost increases lies in the potential for encountering contaminated materials, resulting in considerable increases in labor and equipment costs. Specific facility area requirements have not, at the time of this estimate, been finalized. The unknowns associated with surface and subsurface work, with the inherent possibility of encountering differing conditions as existing work is opened up, will also create a high potential for increased costs.

The overall rate of contingency is based on the fact that facility requirements could and probably will change. Differing conditions during design or construction could effect costs. Regulatory changes could increase requirements associated with the project. Contingency rate is estimated to be approximately 35 percent.

V. **OTHER COMMENTS/CONCERNS SPECIFIC TO THE ESTIMATE**

The estimate includes only the Total Estimated Costs (TEC) and does not address pre-Title I activities, life cycle costs, or other expenses not specifically shown in the estimate.

Labor rates are based on current Site Stabilization Agreement rates.

The current G&A fee has been included in the estimate at 27% and the PIF fee has been included at 4% of construction costs. Procurement costs have also been included at 3.5% of construction costs.

Costs from the Detailed Cost Estimate sheets are direct costs for material, labor, equipment and special contracts. Costs for corresponding divisions on the cost estimate summary sheet include all applicable indirect costs (overhead, profit, commission on subcontracts, sales tax, and bond).

Bechtel BWXT Idaho, LLC
Rev. 10-99

COST ESTIMATE SUMMARY

PROJECT NAME: WAG 3 - INT. TANK FARM ACTION (ROAD OYL RME)
LOCATION 1: INTEC - TANK FARM
REQUESTOR: PEGGY JESSMORE

TYPE OF ESTIMATE: PLANNING
PROJECT NO: 2960-2
PREPARED BY: J. R. MITCHELL
REPORT NAME: Cost Estimate Summary

DATE: 16-Dec-1999
TIME: 16:06:37
CHECKED BY:
APPR'D BY:

WBS Element	Cost Estimate Element	Total Unescalated	Escalation	Total Incl Escalation
1.3	CONSTRUCTION			>> $925,936
1.3.1	GENERAL CONDITIONS	134,396	5,376	139,772
1.3.2	SITEWORK	755,927	30,237	786,164
1.4	GOVERNMENT FURNISHED EQUIP.			>> $0
1.4.1	GOVERNMENT FURNISHED EQUIP.	0	0	0
1.5	G&A/PIF			>> $187,484
1.5.1	G&A/PIF ADDER	180,273	7,211	187,484
1.5.2	PROCUREMENT FEES	26,710	1,068	>> $27,778
	SUBTOTAL INCLUDING ESCALATION	1,097,306	43,892	>> $1,141,198
	PROJECT CONTINGENCY			
	MANAGEMENT RESERVE			>> $114,120
	CONTINGENCY			>> $286,682
	TOTAL ESTIMATED COST			>> $1,542,000

PROJECT COST PARAMETERS

EDI AS A % OF CONST. + GFE= *0.00%*

CONTINGENCY= *35.12%*

Bechtel BWX ... aho, LLC
Rev 10-99

DETAILED COST E... MATE SHEET

PROJECT NAME: WAG 3 - INT. TANK FARM ACTION (ROAD OYL RME)
LOCATION 1: INTEC - TANK FARM
REQUESTOR: PEGGY JESSMORE

TYPE OF ESTIMATE: PLANNING
PROJECT NO.: 2960-2
PREPARED BY: T. R. MITCHELL

DATE 16-Dec-1999
TIME: 16:06:40
REPORT NAME: Detail Cost Estimate Sheet

CODE	DESCRIPTION	QTY	UOM	MATL UNIT COST	CREW SUB	UNIT LAB HOURS	TOTAL LAB HRS	LABOR	CONST. EQUIP.	MAT'L	S/C (OTHER 1)	TOTAL COST
1.3.1	GENERAL CONDITIONS											
	Non-working Supervision	18	WKS		SUPR GEN	40.000	736	29,440	1,000			30,440
	Equipment Mobilization	1	LS		GEN	0.000			10,000			10,000
	Contaminated Boxes	20	Each		GEN	0.000					10,000	10,000
	Safety and Site Specific Training (30 Persons)	40	HRS		LABR GEN	30.000	1,200	36,108				36,108
	Const. Aids Barricades and Safety Devices	1	LS		GEN	0.000			1,000		3,000	4,000
	Jobsite Layout and Survey (3 person crew)	3	WKS		SURV GEN	3.000	9	281				281
	Layout and Survey Equipment (1 , 3 person crew)	120	HRS		GEN	0.000			3,000			3,000
	Punch List and Project Closeout	1	LS		CARP GEN	40.000	40	1,386				1,386
	Decontamination and Demobilization (man hrs)	1	LS		Z-7130 GEN	200.000	200	8,944				8,944
	GENERAL CONDITIONS S/T						2,185	$76,159	$15,000		$13,000	$104,159
1.3.2	SITEWORK											
	Reject Sand Fill Under Paving for Compaction	1,500	CY	15.00	EQMD GEN	0.500	750	24,900		22,500		47,400
	Engineered Bridges at Duct Banks	5	Each		EQMD GEN	30.000	150	4,980	1,000		2,500	8,480
	Move Each Bridge 5 times	25	Moves		EQMD GEN	2.000	50	1,660			1,875	3,535

Bechtel BWXT Idaho, LLC
Rev. 10-99

COST ESTIMATE SUMMARY

PROJECT NAME: WAG 3 - INT. TANK FARM ACTION (ROAD OYL RME)
LOCATION 1: INTEC - TANK FARM
REQUESTOR: PEGGY JESSMORE

TYPE OF ESTIMATE: PLANNING
PROJECT NO: 2960-2
PREPARED BY: J. R. MITCHELL
REPORT NAME: Cost Estimate Summary

DATE: 16-Dec-1999
TIME: 16:06:37
CHECKED BY:
APPR'D BY:

WBS Element	Cost Estimate Element	Total Unescalated	Escalation	Total Incl Escalation
1.3	CONSTRUCTION			>> $925,936
1.3.1	GENERAL CONDITIONS	134,396	5,376	139,772
1.3.2	SITEWORK	755,927	30,237	786,164
1.4	GOVERNMENT FURNISHED EQUIP.			>> $0
1.4.1	GOVERNMENT FURNISHED EQUIP.	0	0	0
1.5	G&A/PIF			>> $187,484
1.5.1	G&A/PIF ADDER	180,273	7,211	187,484
1.5.2	PROCUREMENT FEES	26,710	1,068	>> $27,778
	SUBTOTAL INCLUDING ESCALATION	1,097,306	43,892	>> $1,141,198
	PROJECT CONTINGENCY			
	MANAGEMENT RESERVE			>> $114,120
	CONTINGENCY			>> $286,682
	TOTAL ESTIMATED COST			>> $1,542,000

PROJECT COST PARAMETERS

EDI AS A % OF CONST. + GFE= *0.00%*

CONTINGENCY= *35.12%*

Bechtel BWX Idaho, LLC
Rev 10.99

DETAILED COST ESTIMATE SHEET

PROJECT NAME: WAG 3 - INT. TANK FARM ACTION (ROAD OYL RME)
LOCATION 1: INTEC - TANK FARM
REQUESTOR: PEGGY JESSMORE

TYPE OF ESTIMATE: PLANNING
PROJECT NO.: 2960-2
PREPARED BY: T. R. MITCHELL

DATE 16-Dec-1999
TIME: 16:06:40
REPORT NAME: Detail Cost Estimate Sheet

CODE	DESCRIPTION	QTY	UOM	MATL UNIT COST	CREW SUB	UNIT LAB HOURS	TOTAL LAB HRS	LABOR	CONST. EQUIP.	MAT'L	S/C (OTHER 1)	TOTAL COST
1.3.1	GENERAL CONDITIONS											
	Non-working Supervision	18	WKS		SUPR GEN	40.000	736	29,440	1,000			30,440
	Equipment Mobilization	1	LS		GEN	0.000			10,000			10,000
	Contaminated Boxes	20	Each		GEN	0.000					10,000	10,000
	Safety and Site Specific Training (30 Persons)	40	HRS		LABR GEN	30.000	1,200	36,108				36,108
	Const. Aids Barricades and Safety Devices	1	LS		GEN	0.000			1,000		3,000	4,000
	Jobsite Layout and Survey (3 person crew)	3	WKS		SURV GEN	3.000	9	281				281
	Layout and Survey Equipment (1 , 3 person crew)	120	HRS		GEN	0.000			3,000			3,000
	Punch List and Project Closeout	1	LS		CARP GEN	40.000	40	1,386				1,386
	Decontamination and Demobilization (man hrs)	1	LS		Z-7130 GEN	200.000	200	8,944				8,944
	GENERAL CONDITIONS S/T						2,185	$76,159	$15,000		$13,000	$104,159
1.3.2	SITEWORK											
	Reject Sand Fill Under Paving for Compaction	1,500	CY	15.00	EQMD GEN	0.500	750	24,900		22,500		47,400
	Engineered Bridges at Duct Banks	5	Each		EQMD GEN	30.000	150	4,980	1,000		2,500	8,480
	Move Each Bridge 5 times	25	Moves		EQMD GEN	2.000	50	1,660			1,875	3,535

Bechtel BWXT Idaho, LLC
Rev 10 99

DETAILED COST ESTIMATE SHEET

PROJECT NAME: WAG 3 - INT. TANK FARM ACTION (ROAD OYL RME)
LOCATION 1: INTEC - TANK FARM
REQUESTOR: PEGGY JESSMORE

TYPE OF ESTIMATE: PLANNING
PROJECT NO.: 2960-2
PREPARED BY: T. R. MITCHELL

DATE 16-Dec-1999
TIME: 16:06:40
REPORT NAME: Detail Cost Estimate Sheet

CODE	DESCRIPTION	QTY	UOM	MATL UNIT COST	CREW SUB	UNIT LAB HOURS	TOTAL LAB HRS	LABOR	CONST. EQUIP.	MAT'L	S/C (OTHER 1)	TOTAL COST
1.3.2	SITEWORK Remove and Dispose of Bridges	5	Each		EQMD GEN	2.000	10	332			125	457
	Regrade Site w/ Equipment	60,000	SF		EQMD GEN	0.010	600	19,920	10,200		1,200	31,320
	Regrade Site w/ Hand Labor and Equipment	140,000	SF		LABR GEN	0.020	2,800	84,252			1,400	85,652
	Flash Around Penetrations	1	LS	35,000.00	LABR GEN	1500.00	1,500	45,135		35,000		80,135
Memo:	Crushed Gravel Aggregate Hauled and Stock Piled Local Vendor Quote	1,900	CY		GEN	0.000					57,000	57,000
Memo:	ROAD OYL RME Delivered to Bulk Storage Site Vendor Quote	200,000	SF		GEN	0.000					180,000	180,000
Memo:	Storage of ROAD OYL RME and Aggregate Vendor Quote	200,000	SF		GEN	0.000					6,000	6,000
Memo:	Mixing of ROAD OYL RME and Aggregate Vendor Quote	200,000	SF		GEN	0.000					10,000	10,000
	Placement and compaction of mix w/Equipment	60,000	SF		GEN	0.000					24,000	24,000
	Placement and compaction of mix w/Hand Labor	140,000	SF		GEN	0.000					49,000	49,000
	SITEWORK S/T						5,860	$181,179	$11,200	$57,600	$333,100	$582,979
1.4.1	GOVERNMENT FURNISHED EQUIP.											
	GOVERNMENT FURNISHED EQUIP. S/T						0					
1.5.1	G&A/PIF ADDER Construction G&A - Year One	1	Lot		LMITCO	0.000					143,414	143,414

Bechtel BWX, Idaho, LLC
Rev 10 99

DETAILED COST ESTIMATE SHEET

PROJECT NAME: WAG 3 - INT. TANK FARM ACTION (ROAD OYL RME)
LOCATION 1: INTEC - TANK FARM
REQUESTOR: PEGGY JESSMORE

TYPE OF ESTIMATE: PLANNING
PROJECT NO: 2960-2
PREPARED BY: T. R. MITCHELL

DATE 16-Dec-1999
TIME: 16:06:40
REPORT NAME: Detail Cost Estimate Sheet

CODE	DESCRIPTION	QTY	UOM	MATL UNIT COST	CREW SUB	UNIT LAB HOURS	TOTAL LAB HRS	LABOR	CONST. EQUIP.	MAT'L	S/C (OTHER 1)	TOTAL COST
1.5.1	G&A/PIF ADDER Performance Incentive Factor (PIF) - Year One	1	Lot		LMITCO	0.000					36,859	36,859
	G&A/PIF ADDER S/T						0				$180,273	$180,273
	PROJECT SUBTOTAL						8,045	$267,338	$26,200	$57,500	$526,373	$867,411

Bechtel BWXT Idaho, LLC
Rev 10 99

DETAILED COST ESTIMATE SHEET

PROJECT NAME: WAG 3 - INT. TANK FARM ACTION (ROAD OYL RME)
LOCATION 1: INTEC - TANK FARM
REQUESTOR: PEGGY JESSMORE

TYPE OF ESTIMATE: PLANNING
PROJECT NO.: 2960-2
PREPARED BY: T. R. MITCHELL

DATE 16-Dec-1999
TIME: 16:06:40
REPORT NAME: Detail Cost Estimate Sheet

CODE	DESCRIPTION	QTY	UOM	MATL UNIT COST	CREW SUB	UNIT LAB HOURS	TOTAL LAB HRS	LABOR	CONST. EQUIP.	MAT'L	S/C (OTHER 1)	TOTAL COST
1.3.2	SITEWORK Remove and Dispose of Bridges	5	Each		EQMD GEN	2.000	10	332			125	457
	Regrade Site w/ Equipment	60,000	SF		EQMD GEN	0.010	600	19,920	10,200		1,200	31,320
	Regrade Site w/ Hand Labor and Equipment	140,000	SF		LABR GEN	0.020	2,800	84,252			1,400	85,652
	Flash Around Penetrations	1	LS	35,000.00	LABR GEN	1500.00	1,500	45,135		35,000		80,135
Memo:	Crushed Gravel Aggregate Hauled and Stock Piled Local Vendor Quote	1,900	CY		GEN	0.000					57,000	57,000
Memo:	ROAD OYL RME Delivered to Bulk Storage Site Vendor Quote	200,000	SF		GEN	0.000					180,000	180,000
Memo:	Storage of ROAD OYL RME and Aggregate Vendor Quote	200,000	SF		GEN	0.000					6,000	6,000
Memo:	Mixing of ROAD OYL RME and Aggregate Vendor Quote	200,000	SF		GEN	0.000					10,000	10,000
	Placement and compaction of mix w/Equipment	60,000	SF		GEN	0.000					24,000	24,000
	Placement and compaction of mix w/Hand Labor	140,000	SF		GEN	0.000					49,000	49,000
	SITEWORK S/T						5,860	$181,179	$11,200	$67,600	$333,100	$582,979
1.4.1	GOVERNMENT FURNISHED EQUIP.											
	GOVERNMENT FURNISHED EQUIP. S/T						0					
1.5.1	G&A/PIF ADDER Construction G&A - Year One	1	Lot		LMITCO	0.000					143,414	143,414

Bechtel BWXT [illegible], LLC
Rev 10-99

DETAILED COST ES[illegible]TE SHEET

PROJECT NAME: WAG 3 - INT. TANK FARM ACTION (ROAD OYL RME)
LOCATION 1: INTEC - TANK FARM
REQUESTOR: PEGGY JESSMORE

TYPE OF ESTIMATE: PLANNING
PROJECT NO.: 2960-2
PREPARED BY: T. R. MITCHELL

DATE 16-Dec-1999
TIME: 16:06:40
REPORT NAME: Detail Cost Estimate Sheet

CODE	DESCRIPTION	QTY	UOM	MATL UNIT COST	CREW SUB	UNIT LAB HOURS	TOTAL LAB HRS	LABOR	CONST. EQUIP.	MAT'L	S/C (OTHER 1)	TOTAL COST
1.5.1	G&A/PIF ADDER Performance Incentive Factor (PIF) - Year One	1	Lot		LMITCO	0.000					36,859	36,859
	G&A/PIF ADDER S/T						0				$180,273	$180,273
	PROJECT SUBTOTAL						8,045	$257,338	$26,200	$57,500	$526,373	$867,411

Bechtel BWXT Idaho, LLC

PROJECT: WAG 3 - INT. TANK FARM
ACTION (ROAD OYL RME)
LOCATION: INTEC - TANK FARM
ESTIMATOR: T. R. MITCHELL
CLIENT: PEGGY JESSMORE

CONTRACTOR MARKUP DISTRIBUTION REPORT

DATE: December 16, 1999
ESTTYPE: PLANNING
PROJECT NO: 2960-2

CONTRACTOR		LABOR HOURS	LABOR	MATERIAL	EQUIPMENT	OTHERS	SUBTOTAL	% MARKUP	% DIRECT COST	% TOTAL COST
PRIME CONTRACTOR			$0	$0	$0	$0	$0		0.00%	0.00%
TOTAL FOR PRIME CONTRACTOR		0	*$0*	*$0*	*$0*	*$0*	*$0*	***.**%		
GENERAL CONTRACTOR - GEN			$257,338	$60,375	$26,200	$346,100	$690,013		100.00%	77.50%
BOND	2.00%		$5,147	$1,208	$524	$6,922	$13,800	2.00%		
PROFIT	10.00%		$26,248	$6,158	$2,672	$35,302	$70,381	10.20%		
OVERHEADS	15.00%		$43,310	$10,161	$4,409	$58,249	$116,129	16.83%		
TOTAL FOR GENERAL CONTRACTOR - GEN		8,045	*$332,043*	*$77,902*	*$33,806*	*$446,573*	*$890,324*	29.03%		
TOTAL DIRECT COST		8,045	$257,338	$60,375	$26,200	$346,100	$690,013		100.00%	
TOTAL SUBCONTRACTOR MARKUPS			$74,705	$17,527	$7,606	$100,473	$200,311			22.50%
TOTAL COST TO PRIME			$332,043	$77,902	$33,806	$446,573	$890,324			
PRIME CONTRACTOR MARKUP	***.**%		$0	$0	$0	$0	$0			0.00%
TOTAL PROJECT COST			**$332,043**	**$77,902**	**$33,806**	**$446,573**	**$890,324**			

Bechtel BWXT Idaho, LLC

CONTINGENCY ANALYSIS

PROJECT NAME: WAG 3 - INT. TANK FARM ACTION (ROAD OYL RME)
LOCATION 1: INTEC - TANK FARM
PREPARED BY: PEGGY JESSMORE

TYPE OF ESTIMATE: PLANNING
PROJECT NO: 2960-2
PREPARED BY: T. R. MITCHELL

DATE: 16-Dec-1999
TIME: 16:06:32

REPORT NAME: Contingency Analysis

PROBABLE % VARIATION									PROJECT CONTINGENCY		SUMMARY
WBS Element	Cost Estimate Element	Total Cost w/o Contingency	% Total Cost	Prob. % Var. From Est. -	Prob. % Var. From Est. +	Wt. % of Prob. -	Wt. % of Prob. +	Contingency	%	Cost	Total Cost by Element
1.3.1	GENERAL CONDITIONS	134,396	11.78	5	40	0.59	4.71	4.181%	11.91%	47,723	182,119
1.3.2	SITEWORK	755,927	66.24	5	40	3.31	26.50	23.515%	66.97%	268,424	1,024,351
1.4.1	GOVERNMENT FURNISHED EQUIP.	0	0.00	0	0	0.00	0.00	0.000%	0.00%	0	0
1.5.1	G&A/PIF ADDER	180,273	15.80	10	40	1.58	6.32	5.529%	15.75%	63,112	243,385
1.5.2	PROCUREMENT FEES	26,710	2.34	10	35	0.23	0.82	0.714%	2.03%	8,149	34,859
	ESCALATION	43,892	3.85	10	35	0.38	1.35	1.173%	3.34%	13,394	57,286
	SUBTOTAL	1,141,198	100.00					35.112%			
	CALCULATED CONTINGENCY	400,694									
	RESULTANT TEC	1,541,892									
	ROUNDED TEC	1,542,000									
	PROJECT CONTINGENCY	400,802						35.12%			
	MANAGEMENT RESERVE	114,120									
	CONTINGENCY	286,682									
	TOTAL ESTIMATED COST	1,542,000								400,802	1,542,000

CONFIDENCE LEVEL AND ASSUMED RISKS:
The Bechtel BWXT Idaho, LLC Cost Estimate Contingency Analysis Model is based on the applied contingency and the assumptions upon which the estimate was predicated. The model is applied with a suggested risk level of 18% and a level of confidence of 90% the estimate will fall within the bid range. The Contingency Analysis is based on a weighted average to provide a 90 % probability of underrun and a 10% probability of overrun.

CONTINGENCY ANALYSIS GUIDE BY TYPE OF ESTIMATE
Guidelines established by DOE/FM 50, Cost Estimating Guide, Vol. 6, Cost Guide, and as presented in the INEEL Cost Estimating Guide.

PLANNING	20% – 30%
Experimental/Special Conditions	Up to 50%
Conceptual	15% – 25%
Experimental/Special Conditions	Up to 40%
TITLE I	10% – 20%
TITLE II	5% – 15%
TITLE II/AFC	Market Conditions

Bechtel BWXT Idaho, LLC

CONTRACTOR MARKUP DISTRIBUTION REPORT

PROJECT: WAG 3 - INT. TANK FARM ACTION (ROAD OYL RME)
LOCATION: INTEC - TANK FARM
ESTIMATOR: T. R. MITCHELL
CLIENT: PEGGY JESSMORE

DATE: December 16, 1999
ESTTYPE: PLANNING
PROJECT NO: 2960-2

CONTRACTOR		LABOR HOURS	LABOR	MATERIAL	EQUIPMENT	OTHERS	SUBTOTAL	% MARKUP	% DIRECT COST	% TOTAL COST
PRIME CONTRACTOR			$0	$0	$0	$0	$0		0.00%	0.00%
TOTAL FOR PRIME CONTRACTOR		0	*$0*	*$0*	*$0*	*$0*	*$0*	***.**%		
GENERAL CONTRACTOR - GEN			$257,338	$60,375	$26,200	$346,100	$690,013		100.00%	77.50%
BOND	2.00%		$5,147	$1,208	$524	$6,922	$13,800	2.00%		
PROFIT	10.00%		$26,248	$6,158	$2,672	$35,302	$70,381	10.20%		
OVERHEADS	15.00%		$43,310	$10,161	$4,409	$58,249	$116,129	16.83%		
TOTAL FOR GENERAL CONTRACTOR - GEN		8,045	*$332,043*	*$77,902*	*$33,806*	*$446,573*	*$890,324*	29.03%		
TOTAL DIRECT COST		8,045	$257,338	$60,375	$26,200	$346,100	$690,013		100.00%	
TOTAL SUBCONTRACTOR MARKUPS			$74,705	$17,527	$7,606	$100,473	$200,311			22.50%
TOTAL COST TO PRIME			$332,043	$77,902	$33,806	$446,573	$890,324			
PRIME CONTRACTOR MARKUP	***.**%		$0	$0	$0	$0	$0			0.00%
TOTAL PROJECT COST			**$332,043**	**$77,902**	**$33,806**	**$446,573**	**$890,324**			

Bechtel BWXT Idaho, LLC

CONTINGENCY ANALYSIS

PROJECT NAME: WAG 3 - INT. TANK FARM ACTION (ROAD OYL RME)
LOCATION 1: INTEC - TANK FARM
PREPARED BY: PEGGY JESSMORE

TYPE OF ESTIMATE: PLANNING
PROJECT NO: 2960-2
PREPARED BY: T. R. MITCHELL

DATE: 16-Dec-1999
TIME: 16:06:32

REPORT NAME: Contingency Analysis

PROBABLE % VARIATION									PROJECT CONTINGENCY		SUMMARY
WBS Element	Cost Estimate Element	Total Cost w/o Contingency	% Total Cost	Prob. % Var. From Est. -	Prob. % Var. From Est. +	Wt. % of Prob. -	Wt. % of Prob. +	Contingency	%	Cost	Total Cost by Element
1.3.1	GENERAL CONDITIONS	134,396	11.78	5	40	0.59	4.71	4.181%	11.91%	47,723	182,119
1.3.2	SITEWORK	755,927	66.24	5	40	3.31	26.50	23.515%	66.97%	268,424	1,024,351
1.4.1	GOVERNMENT FURNISHED EQUIP.	0	0.00	0	0	0.00	0.00	0.000%	0.00%	0	0
1.5.1	G&A/PIF ADDER	180,273	15.80	10	40	1.58	6.32	5.529%	15.75%	63,112	243,385
1.5.2	PROCUREMENT FEES	26,710	2.34	10	35	0.23	0.82	0.714%	2.03%	8,149	34,859
	ESCALATION	43,892	3.85	10	35	0.38	1.35	1.173%	3.34%	13,394	57,286
	SUBTOTAL	1,141,198	100.00					35.112%			
	CALCULATED CONTINGENCY	400,694									
	RESULTANT TEC	1,541,892									
	ROUNDED TEC	1,542,000									
	PROJECT CONTINGENCY	400,802						35.12%			
	MANAGEMENT RESERVE	114,120									
	CONTINGENCY	286,682									
	TOTAL ESTIMATED COST	1,542,000								400,802	1,542,000

CONFIDENCE LEVEL AND ASSUMED RISKS:
The Bechtel BWXT Idaho, LLC Cost Estimate Contingency Analysis Model is based on the applied contingency and the assumptions upon which the estimate was predicated. The model is applied with a suggested risk level of 18% and a level of confidence of 90% the estimate will fall within the bid range. The Contingency Analysis is based on a weighted average to provide a 90 % probability of underrun and a 10% probability of overrun.

CONTINGENCY ANALYSIS GUIDE BY TYPE OF ESTIMATE
Guidelines established by DOE/FM 50, Cost Estimating Guide, Vol. 6, Cost Guide, and as presented in the INEEL Cost Estimating Guide.

PLANNING	20% – 30%
Experimental/Special Conditions	Up to 50%
Conceptual	15% – 25%
Experimental/Special Conditions	Up to 40%
TITLE I	10% – 20%
TITLE II	5% – 15%
TITLE II/AFC	Market Conditions

G & A and PIF Worksheet

Project: INTEC TANK FARM (ROAD OYL RME)

Estimate No.: 2960-2

Estimator: T.R. Mitchell

Date: 12/16/99

Total Construction Cost	$	890,324
Construction Procurement Fee - 3.5	$	31,161
Total GFE Cost	$	-
GFE Procurement Fee - 3.5%	$	-

Construction Cost

Construction Cost - Year 1	$	890,324	
GFE Cost - Year 1	$	-	
Subtotal	$	890,324	$ 890,324

G & A @ 27% With A $500,000 Construction Ceiling ($135,000)

			G & A		Amount
Construction Cost - Year 1	$	890,324	27%	$	135,000
Procurement Cost	$	31,161	27%	$	8,414
GFE Cost - Year 1	$	-	27%	$	-
GFE Procurement Cost	$	-	27%	$	-
Subtotal				$	143,414

$ 143,414

Performance Incentive Factor (PIF) @ 4.0% - No Ceiling

			PIF		
Construction Cost - Year 1	$	890,324	4.0%	$	35,613
Procurement Cost	$	31,161	4.0%	$	1,246
GFE Cost - Year 1	$	-	4.0%	$	-
GFE Procurement Cost	$	-	4.0%	$	-
Subtotal				$	36,859

$ 36,859

Total Adders $	$ 180,273
Total Cost	$ 1,070,597
Total Adder %	20%

G & A and PIF Worksheet

Project: INTEC TANK FARM (ROAD OYL RME)

Estimate No.: 2960-2

Estimator: T.R. Mitchell

Date: 12/16/99

Total Construction Cost	$	890,324
Construction Procurement Fee - 3.5	$	31,161
Total GFE Cost	$	-
GFE Procurement Fee - 3.5%	$	-

Construction Cost

Construction Cost - Year 1	$	890,324		
GFE Cost - Year 1	$	-		
Subtotal	$	890,324	$	890,324

G & A @ 27% With A $500,000 Construction Ceiling ($135,000)

			G & A		Amount		
Construction Cost - Year 1	$	890,324	27%	$	135,000		
Procurement Cost	$	31,161	27%	$	8,414		
GFE Cost - Year 1	$	-	27%	$	-		
GFE Procurement Cost	$	-	27%	$	-		
Subtotal				$	143,414	$	143,414

Performance Incentive Factor (PIF) @ 4.0% - No Ceiling

			PIF				
Construction Cost - Year 1	$	890,324	4.0%	$	35,613		
Procurement Cost	$	31,161	4.0%	$	1,246		
GFE Cost - Year 1	$	-	4.0%	$	-		
GFE Procurement Cost	$	-	4.0%	$	-		
Subtotal				$	36,859	$	36,859

Total Adders $	$	180,273
Total Cost	$	1,070,597
Total Adder %		20%

Bechtel B&W Idaho

COST ESTIMATE SUPPORT DATA RECAPITULATION

Project Title: WAG 3 INTERIM TANK FARM ACTION
Estimator: J. D. Folker/ T. R. Mitchell
Date: October 6, 1999
Estimate Type: Planning
File: 2960
Approved By:

I. **SCOPE OF WORK:** *Brief description of the proposed project.*

OPTION #1 - PAVING

The scope of work includes constructing surface water drainage by placing a three (3) inch layer of asphalt paving over a five (5) acre site at the Tank Farm. The purpose for this procedure is to reduce water infiltration to contaminated soil at the Tank Farm Area (TFA). The surface water will be drained off the site area by way of existing drainage ditches and sloped areas. This process will be accomplished by considerable site regrading and/or reshaping the existing area.

In the regrading and reshaping process, consideration must be given to the probability that finer material may have to be imported and mixed with courser granular on site material to gain compaction of the asphalt material . Site evaluation by Civil Engineering must be considered as part of this Scope of Work.

Duct banks and other penetrations should be flashed with a pre-designed, pre-engineered flashing material. After the paved has been compacted and rolled, it will be sealed with a spray coat of asphalt sealer.

In-as-much as this is a Rough Order of Magnitude (ROM) type estimate, it must be understood there will need to be considerable Engineering input.

II. **BASIS OF THE ESTIMATE:** *Drawings, Design Report, Engineers Notes and/or other documentation upon which the estimate is originated.*

Discussions and verbal coordination with Lee Davison (Project Manager), Peggy Jessmore (Assistant to the Project Manager), and a walk-down at the site with Dave Mackovec (Facility Engineer). Quote's for asphalt were obtained from Rance Bair at Desert Sage. Insta Coat Spray on quotes were obtained from Tom Nachtman at New Waste Concepts Inc. Quotes for the Sprung Structure were obtained from Paul Shriver at Sprung Instant Structures.

III. **ASSUMPTIONS:** *Conditions statements accepted or supposed true without proof of demonstration. An assumption has a direct impact on total estimated cost.*

The following issues have been assumed:

1. All work will be competitively bid and performed by a prime subcontractor with specialty work performed by lower tier subcontractors as needed.
2. Non-working supervision will be required.
3. Access to and from the work area for personnel and any equipment will be made available.
4. Maintenance and Operations (M&O) will perform design and construction management.
5. Construction work for this project will be performed during a standard 40-hour week with no overtime allowances.
6. A construction period not to exceed four months, including mobilization, training, decontamination, and demobilization has been assumed.
7. Paving process cannot be accomplished during wet or cold weather.
8. All personnel will require initial or refresher training not to exceed an average of 40 hours per person.
9. Half time Radiological Control Technician (RCT) (paid by M&O) has been assumed.
10. Electrical power for this project will be made available within 100 feet of the work area paid by M & O.
11. There are no major mechanical, plumbing, or electrical additions or modifications required. It is further assumed that piping or other mechanical utilities will not be affected by this work.
12. Any demolition material or soils will be disposed of at the ICPP Low-Level Waste stockpile area.
13. M&O will furnish any and all hot boxes needed to dispose of any and all hot area soil that will require removal.
14. Costs for collecting and hauling off up to 20 boxes of soil has been figured in this estimate. It is further assumed that the haul distance will not exceed five (5) miles or will be disposed of at the ICPP Low Level Waste stockpile area.
15. Any material within the confines of proposed site area that will need to be hauled from the site would require a hazardous waste determination.
16. Any hazardous/contaminated area that will require disposal will be surveyed, located, and marked prior to start of construction by M&O.
17. Sprinkling of the site as needed will control any windblown contamination. The water source is available at the site at no cost to this estimate.
18. M & O will furnish personnel protective equipment (PPE) at no cost.
19. Work being completed inside the TFA fence will not require any radiation absorbed dose (RAD) equipment or controls except those few areas identified by survey.

20. All major construction equipment, other than small tools and expendables can be decontaminated on site and recovered. Costs have not been included for replacement of equipment in this estimate.
21. The extent of the paving area of this project has been determined as being five (5) acres and no allowance has been given for minor boxes and/or protrusions for reduction of scope in these areas
23. Adjustments for labor productivity are assumed to be adequate for decreased output, downtime, specific job-site orientation, and other factors based on anticipated on site conditions.
24. Approximately 60 to 70 percent of the 200,000 square feet area will be accomplished by means of handwork and light tools and equipment. The remaining 30 to 40 percent may be accomplished by more conventional type equipment. There is a need to proceed very carefully as the heavier equipment will not be allowed within the 10 foot restricted areas of existing structures plus there are numerous surface penetrations in these areas.
25. The load-restricted areas will be identified.

IV. CONTINGENCY GUIDELINE IMPLEMENTATION: *The percentage used for contingency as determined by the contingency allowance guidelines can be altered to reflect the type of construction and conditions that may impact the total estimated cost.*

The greatest risk for anticipated cost increases lies in the potential for encountering contaminated materials, resulting in considerable increases in labor and equipment costs. Specific facility area requirements have not, at the time of this estimate, been finalized. The unknowns associated with surface and subsurface work, with the inherent possibility of encountering differing conditions as existing work is opened up, creating a high potential for increased costs.

The overall rate of contingency is based on the fact that facility requirements could and probably will change. Differing conditions during design or construction could effect costs. Regulatory changes could increase requirements associated with the project. Contingency rate is estimated to be approximately 30 percent.

V. OTHER COMMENTS/CONCERNS SPECIFIC TO THE ESTIMATE

The estimate includes only the Total Estimated Costs (TEC) and does not address pre-Title I activities, life cycle costs, or other expenses not specifically shown in the estimate.

Labor rates are based on current Site Stabilization Agreement rates.

G&A have been applied at the rate of 27 percent per fiscal year.

Prime subcontractor's markup fee and bond costs have been added to the estimate and are rolled up in the total estimated ROM costs.

Lockheed Martin Idaho Technologies Co.
Rev. 6-96

COST ESTIMATE SUMMARY

PROJECT NAME: WAG 3 - INT. TANK FARM ACTION (PAVING OPTION #1)
LOCATION 1: INTEC - TANK FARM
PROJECTOR: L. DAVISON

TYPE OF ESTIMATE: ROM
PROJECT NO: 2960
PREPARED BY: HARRIS/MITCHELL/FOLK
REPORT NAME: Cost Estimate Summary

DATE: 06-Oct-1999
TIME: 08:42:40
CHECKED BY: _____
APPR'D BY: _____

WBS Element	Cost Estimate Element	Total Unescalated	Escalation		Total Incl Escalation
1.3	CONSTRUCTION			>>	$1,410,968
1.3.1	GENERAL CONDITIONS	156,891	7,845		164,736
1.3.2	SITEWORK	1,186,888	59,344		1,246,232
1.4	GOVERNMENT FURNISHED EQUIP.			>>	$0
1.4.1	GOVERNMENT FURNISHED EQUIP.	0	0		0
1.5	G&A/PIF			>>	$254,021
1.5.1	G&A/PIF ADDER	241,925	12,096		254,021
1.5.2	PROCUREMENT FEES	40,313	2,016	>>	$42,329
	SUBTOTAL INCLUDING ESCALATION	1,626,017	81,301	>>	$1,707,318
	PROJECT CONTINGENCY				
	MANAGEMENT RESERVE			>>	$170,732
	CONTINGENCY			>>	$428,076
	TOTAL ESTIMATED COST			>>	$2,306,126

PROJECT COST PARAMETERS

EDI AS A % OF CONST. + GFE= *0.00%*

CONTINGENCY= *35.07%*

Lockheed Martin Idaho Technologies Co.
Rev 6 96

DETAILED COST ESTIMATE SHEET

PROJECT NAME: WAG 3 - INT. TANK FARM ACTION (PAVING OPTION #1)
LOCATION 1: INTEC - TANK FARM
REQUESTOR: L. DAVISON

TYPE OF ESTIMATE: ROM
PROJECT NO.: 2960
PREPARED BY: HARRIS/MITCHELL/FOLK

DATE 06-Oct-1999
TIME: 08:42:47
REPORT NAME: Detail Cost Estimate Sheet

CODE	DESCRIPTION	QTY	UOM	MATL UNIT COST	CREW SUB	UNIT LAB HOURS	TOTAL LAB HRS	LABOR	CONST. EQUIP.	MAT'L	S/C (OTHER 1)	TOTAL COST
1.3.1	GENERAL CONDITIONS											
	Non-working Supervision		FTEs		SUPR GEN	1750.00	735	29,400	420			29,820
	Equipment Mobilization	1	LS		GEN	0.000			10,000			10,000
	Contaminated Boxes	20	Each		GEN	0.000					10,000	10,000
	Safety and Site Specific Training (30 Persons)	60	HRS		LABR GEN	30.000	1,800	54,162				54,162
	Const. Aids Barricades and Safety Devices	1	LS		GEN	0.000			1,000		3,000	4,000
	Jobsite Layout and Survey (3 person crew)	3	WKS		SURV GEN	3.000	9	281				281
	Layout and Survey Equipment (1 , 3 person crew)	120	HRS		GEN	0.000			3,000			3,000
	Punch List and Project Closeout	1	LS		CARP GEN	40.000	40	1,386				1,386
	Decontamination and Demobilization (man hrs)	1	LS		Z-7130 GEN	200.000	200	8,944				8,944
	GENERAL CONDITIONS S/T						2,784	$94,173	$14,420		$13,000	$121,593
1.3.2	SITEWORK											
	Reject Sand Fill Under Paving for Compaction	1,500	CY	15.00	EQMD GEN	0.500	750	24,900		22,500		47,400
	Engineered Bridges at Duct Banks	5	Each		EQMD GEN	30.000	150	4,980	1,000		2,500	8,480
	Move Each Bridge 5 times	25	Moves		EQMD GEN	2.000	50	1,660			1,875	3,535

DETAILED COS... ATE SHEET

PROJECT NAME: WAG 3 - INT. TANK FARM ACTION (PAVING OPTION #1)
LOCATION 1: INTEC - TANK FARM
REQUESTOR: L. DAVISON

TYPE OF ESTIMATE: ROM
PROJECT NO.: 2960
PREPARED BY: HARRIS/MITCHELL/FOLK

DATE 06-Oct-1999
TIME: 08:42:47
REPORT NAME: Detail Cost Estimate Sheet

CODE	DESCRIPTION	QTY	UOM	MATL UNIT COST	CREW SUB	UNIT LAB HOURS	TOTAL LAB HRS	LABOR	CONST. EQUIP.	MAT'L	S/C (OTHER 1)	TOTAL COST
1.3.2	SITEWORK											
	Remove and Dispose of Bridges	5	Each		EQMD GEN	2.000	10	332			125	457
	Regrade Site w/ Equipment	60,000	SF		EQMD GEN	0.010	600	19,920	10,200		1,200	31,320
	Regrade Site w/ Hand Labor and Equipment	140,000	SF		LABR GEN	0.020	2,800	84,252			1,400	85,652
	Flash Around Penetrations	1	LS	35,000.00	LABR GEN	1500.00	1,500	45,135		35,000		80,135
Memo:	Furnish, Place & Compact Asphalt Paving w/ Equipment Based on Local Contractor Quote	60,000	SF		GEN	0.000					240,000	240,000
	Furnish, Place & Compact Asphalt Paving w/ Hand Labor	140,000	SF		GEN	0.000					420,000	420,000
	SITEWORK S/T						5,860	$181,179	$11,200	$57,500	$667,100	$916,979
1.4.1	GOVERNMENT FURNISHED EQUIP.											
	GOVERNMENT FURNISHED EQUIP. S/T						0					
1.5.1	G&A/PIF ADDER											
	Construction G&A - Year One	1	Lot		LMITCO	0.000					150,906	150,906
	Performance Incentive Factor (PIF) - Year One	1	Lot		LMITCO	0.000					91,019	91,019
	G&A/PIF ADDER S/T						0				$241,925	$241,925

Lockheed Martin Idaho Technologies Co.
Rev 6-96

DETAILED COST ESTIMATE SHEET

PROJECT NAME: WAG 3 - INT. TANK FARM ACTION (PAVING OPTION #1)
LOCATION 1: INTEC - TANK FARM
REQUESTOR: L. DAVISON

TYPE OF ESTIMATE: ROM
PROJECT NO.: 2960
PREPARED BY: HARRIS/MITCHELL/FOLK

DATE 06-Oct-1999
TIME: 08:42:47
REPORT NAME: Detail Cost Estimate Sheet

CODE	DESCRIPTION	QTY	UOM	MATL UNIT COST	CREW SUB	UNIT LAB HOURS	TOTAL LAB HRS	LABOR	CONST. EQUIP.	MAT'L	S/C (OTHER 1)	TOTAL COST
	PROJECT SUBTOTAL						8,644	$276,352	$25,620	$57,500	$922,025	$1,280,497

Lockheed M[illegible] Idaho Technologies Co.

CONTRACTOR MARKU[illegible]TION REPORT

PROJECT: [illegible]AG 3 - INT. TANK FARM ACTION (PAVING OPTION #1)
LOCATION: INTEC - TANK FARM
ESTIMATOR: HARRIS/MITCHELL/FOLKER
CLIENT: L. DAVISON

DATE: October 6, 1999
ESTTYPE: ROM
PROJECT NO: 2960

CONTRACTOR		LABOR HOURS	LABOR	MATERIAL	EQUIPMENT	OTHERS	SUBTOTAL	% MARKUP	% DIRECT COST	% TOTAL COST
PRIME CONTRACTOR			$0	$0	$0	$0	$0		0.00%	0.00%
TOTAL FOR PRIME CONTRACTOR		0	*$0*	*$0*	*$0*	*$0*	*$0*	***.**%		
GENERAL CONTRACTOR - GEN			$275,352	$60,375	$25,620	$680,100	$1,041,447		100.00%	77.50%
BOND	2.00%		$5,507	$1,208	$512	$13,602	$20,829	2.00%		
PROFIT	10.00%		$28,086	$6,158	$2,613	$69,370	$106,228	10.20%		
OVERHEADS	15.00%		$46,342	$10,161	$4,312	$114,461	$175,275	16.83%		
TOTAL FOR GENERAL CONTRACTOR - GEN		8,644	*$355,286*	*$77,902*	*$33,057*	*$877,533*	*$1,343,779*	29.03%		
TOTAL DIRECT COST		**8,644**	**$275,352**	**$60,375**	**$25,620**	**$680,100**	**$1,041,447**		**100.00%**	
TOTAL SUBCONTRACTOR MARKUPS			**$79,935**	**$17,527**	**$7,437**	**$197,433**	**$302,332**			22.50%
TOTAL COST TO PRIME			**$355,286**	**$77,902**	**$33,057**	**$877,533**	**$1,343,779**			
PRIME CONTRACTOR MARKUP	***.**%		**$0**	**$0**	**$0**	**$0**	**$0**			**0.00%**
TOTAL PROJECT COST			**$355,286**	**$77,902**	**$33,057**	**$877,533**	**$1,343,779**			

Lockheed Martin Idaho Technologies Co.

CONTINGENCY ANALYSIS

PROJECT NAME: WAG 3 - INT. TANK FARM ACTION (PAVING OPTION #1)
LOCATION 1: INTEC - TANK FARM
REQUESTOR: L. DAVISON

TYPE OF ESTIMATE: ROM
PROJECT NO: 2960
PREPARED BY: HARRIS/MITCHELL/FOLK

DATE: 06-Oct-1999
TIME: 08:42:33

REPORT NAME: Contingency Analysis

				PROBABLE % VARIATION					PROJECT CONTINGENCY		SUMMARY
WBS Element	Cost Estimate Element	Total Cost w/o Contingency	% Total Cost	Prob. % Var. From Est. -	Prob. % Var. From Est. +	Wt. % of Prob. -	Wt. % of Prob. +	Contingency	%	Cost	Total Cost by Element
1.3.1	GENERAL CONDITIONS	156,891	9.19	5	40	0.46	3.68	3.262%	9.30%	55,696	212,587
1.3.2	SITEWORK	1,186,888	69.52	5	40	3.48	27.81	24.679%	70.36%	421,345	1,608,233
1.4.1	GOVERNMENT FURNISHED EQUIP.	0	0.00	0	0	0.00	0.00	0.000%	0.00%	0	0
1.5.1	G&A/PIF ADDER	241,925	14.17	10	40	1.42	5.67	4.959%	14.14%	84,674	326,599
1.5.2	PROCUREMENT FEES	40,313	2.36	10	35	0.24	0.83	0.720%	2.05%	12,295	52,608
	ESCALATION	81,301	4.76	10	35	0.48	1.67	1.452%	4.14%	24,798	106,099
	SUBTOTAL	1,707,318	100.00					35.073%			
	CALCULATED CONTINGENCY	598,808									
	RESULTANT TEC	2,306,126									
	ROUNDED TEC	2,306,126									
	PROJECT CONTINGENCY	598,808						35.07%			
	MANAGEMENT RESERVE	170,732									
	CONTINGENCY	428,076									
	TOTAL ESTIMATED COST	2,306,126								598,808	2,306,126

CONFIDENCE LEVEL AND ASSUMED RISKS:
Lockheed Martin Idaho Technologies Co. Cost Estimate Contingency Analysis Model is based on the applied contingency and the assumptions upon which the estimate was predicated. The model is applied with a suggested risk level of 18% and a level of confidence of 90% the estimate will fall within the bid range. The Contingency Analysis is based on a weighted average to provide a 90 % probability of underrun and a 10% probability of overrun.

CONTINGENCY ANALYSIS GUIDE BY TYPE OF ESTIMATE
Guidelines established by DOE/FM 50, Cost Estimating Guide, Vol. 1, Cost Guide, and as presented in the INEL Cost Estimating Guide.

PLANNING	20% – 30%
Experimental/Special Conditions	Up to 50%
Conceptual	15% – 25%
Experimental/Special Conditions	Up to 40%
TITLE I	10% – 20%
TITLE II	5% – 15%
TITLE II/AFC	Market Conditions

G & A and PIF Worksheet

Project: INTEC TANK FARM (ASPHALT PAVING)

Estimate No.:

Estimator: T.R MITCHELL

Date: 9/30/99

Total Construction Cost	$	1,963,742
Construction Procurement Fee - 3%	$	58,912
Total GFE Cost	$	-
GFE Procurement Fee - 3%	$	-

Construction Cost

Construction Cost - Year 1	$	1,963,742	
GFE Cost - Year 1	$	-	
Subtotal	$	1,963,742	$ 1,963,742

G & A @ 27% With A $500,000 Construction Ceiling ($135,000)

			G & A		Amount
Construction Cost - Year 1	$	1,963,742	27%	$	135,000
Procurement Cost	$	58,912	27%	$	15,906
GFE Cost - Year 1	$	-	27%	$	-
GFE Procurement Cost	$	-	27%	$	-
Subtotal				$	150,906

	$ 150,906

Performance Incentive Factor (PIF) @ 4.5% - No Ceiling

			PIF		
Construction Cost - Year 1	$	1,963,742	4.5%	$	88,368
Procurement Cost	$	58,912	4.5%	$	2,651
GFE Cost - Year 1	$	-	4.5%	$	-
GFE Procurement Cost	$	-	4.5%	$	-
Subtotal				$	91,019

	$ 91,019

Total Adders $	$ 241,926
Total Cost	$ 2,205,668
Total Adder %	12%

INEEL

Idaho National Engineering & Environmental Laboratory

INTEROFFICE MEMORANDUM

Date:	January 5, 2000		
To:	P. J. Jessmore	MS 3953	6-9367
From:	T.R. Mitchell	MS 3655	6-3864
Subject:	WAG 3 INTERIM TANK FARM ACTION - TRM-1-00		

Transmitted herewithin is the planning cost estimate for the above referenced project. This Cost Estimate for the use of Road Oyl Resin Modified Emulsion (RME) and Insta Coat Spray On has been completed in the same format as the previous five options as requested, only costs for construction (direct and indirect costs), G&A and PIF allowances, and procurement have been included.

The Total Construction Cost is.....$1,973,000

Please refer to the attached detail, recapitulation and summary sheets for cost breakdowns, descriptions and cost estimating basis.

If you have any questions or comments, please contact me on 526-3864 or e-mail MITCTR.

Attachments

cc: Estimate File #2960-3
J. D. Folker, MS 3655
T. R. Mitchell Letter File

Bechtel BWXT Idaho, LLC

COST ESTIMATE SUPPORT DATA RECAPITULATION

Project Title: WAG 3 INTERIM TANK FARM ACTION
Estimator: T. R. Mitchell
Date: January 5, 2000
Estimate Type: Planning
File: 2960-3
Approved By:

I. **SCOPE OF WORK:** *Brief description of the proposed project.*

ROAD OYL RESIN MODIFIED EMULSION (RME)
AND SPRAY ON PRODUCT COMBINATION

The scope of work for this project includes constructing surface water drainage over a five (5) acre area at the Tank Farm. This will be done by placing one fourth inch (1/4") of Insta Coat Spray On Product over approximately a 140,000 square foot area, and a three (3) inch layer of Road Oyl Resin Modified Emulsion (RME) over approximately a 60,000 square foot area at the Tank Farm. The purpose for this procedure is to reduce water infiltration to contaminated soil at the Tank Farm Area (TFA). The surface water will be drained off the site area by way of existing drainage ditches and sloped areas.

In order to accomplish the above process, considerable site re-grading and/or reshaping the existing area will be required.

Duct banks and other penetrations should be flashed with a pre-designed, pre-engineered flashing material.

In-as-much as this is a Rough Order of Magnitude (ROM) type estimate, it is to be understood there must be considerable Engineering input.

II. **BASIS OF THE ESTIMATE:** *Drawings, Design Report, Engineers Notes and/or other documentation upon which the estimate is originated.*

Discussions and verbal coordination with Peggy Jessmore (Project Requestor), John Folker and Travis Mitchell (Cost Estimators). Quote's for Road Oyl RME were obtained from Glen Gates at Soil Stabilization Products Company Inc. Insta Coat Spray on quotes including necessary spray equipment and on-site technical consultants were obtained from Tom Nachtman at New Waste Concepts Inc.

III. **ASSUMPTIONS:** *Conditions statements accepted or supposed true without proof of demonstration. An assumption has a direct impact on total estimated cost.*

The following issues have been assumed:

1. All work will be competitively bid and performed by a prime subcontractor with specialty work performed by lower tier subcontractors as needed.
2. Non-working supervision will be required.
3. Access to and from the work area for personnel and any equipment will be made available.
4. Maintenance and Operations (M&O) will perform design and construction management.
5. Construction work for this project will be performed during a standard 40-hour week with no overtime allowances.
6. A construction period not to exceed four months, including mobilization, training, decontamination, and demobilization has been assumed.
7. Assumed application of Insta Coat to be 10,000 SF/ day.
8. The asphalt/Insta Coat process cannot be accomplished during wet or cold weather.
9. All personnel will require initial or refresher training. An average of 40 hours per person has been allowed in this estimate.
10. Assume the purchase of a 900 gallon pump will be sufficient for this task.
11. Electrical power for this project will be made available within 100 feet of the work area paid by M & O.
12. There are no major mechanical, plumbing, or electrical additions or modifications required. It is further assumed that piping or other mechanical utilities will not be affected by this work.
13. Any demolition material or soils will be disposed at the ICPP Low-Level Waste stockpile area.
14. Costs for collecting and hauling off up to 20 boxes of soil has been figured in this estimate. It is further assumed that the haul distance will not exceed five (5) miles or will be disposed of at the ICPP Low Level Waste stockpile area.
15. M&O will furnish any and all hot boxes needed to dispose of any and all hot area soil that will require removal.
16. Costs for collecting and hauling off up to 20 boxes of soil has been figured in this estimate. It is further assumed that the haul distance will not exceed five (5) miles or will be disposed of at the ICPP Low Level Waste stockpile area.
17. Any material within the confines of proposed site area that will need to be hauled from the site would require a hazardous waste determination.
18. Any hazardous/contaminated area that will require disposal will be surveyed located and marked prior to start of construction by M&O.
19. Sprinkling of the site, as needed, will control any windblown contamination, and the water source is available at the site at no cost to this estimate.
20. Personnel Protective Equipment (PPE) that will be required will be furnished at no cost by M & O.

21. Work being completed inside the TFA fence will not require any RAD equipment or controls except those few areas identified by survey.
22. All major construction equipment, other than small tools and expendables can be decontaminated on site and recovered. No costs have been included for replacement of equipment in this estimate.
23. The extent of the working area of this project has been determined as being five (5) acres and no allowance has been given for minor boxes and/or protrusions for reduction of scope in these areas.
24. Adjustments for labor productivity are assumed to be adequate for decreased output, downtime, specific job site orientation, and other factors based on anticipated on-site conditions.
25. All load-restricted areas will be identified.

IV. **CONTINGENCY GUIDELINE IMPLEMENTATION:** *The percentage used for contingency as determined by the contingency allowance guidelines can be altered to reflect the type of construction and conditions that may impact the total estimated cost.*

The greatest risk for anticipated cost increases lies in the potential for encountering contaminated materials, resulting in considerable increases in labor and equipment costs. Specific facility/area requirements have not at the time of this estimate been finalized, and the unknowns associated with surface and subsurface work, with the inherent possibility of encountering differing conditions as existing work is opened up, will also create a high potential for increased costs.

The overall rate of contingency is based on the fact that facility requirements could and probably will change. Differing conditions during design or construction could effect costs and regulatory changes could increase requirements associated with the project. The contingency rate is estimated to be approximately 33 percent.

V. **OTHER COMMENTS/CONCERNS SPECIFIC TO THE ESTIMATE**

The estimate includes only the Total Estimated Costs (TEC) and does not address pre-Title I activities, life cycle costs or other expenses not specifically shown in the estimate.

Labor rates are based on current Site Stabilization Agreement rates.

The current G&A fee has been included in the estimate at 27% and the PIF fee has been included at 4% of construction costs. Procurement costs have also been included at 3.5% of construction costs.

Costs from the Detailed Cost Estimate sheets are direct costs for material, labor, equipment and special contracts. Costs for corresponding divisions on the cost estimate summary sheet include all applicable indirect costs (overhead, profit, commission on subcontracts, sales tax, and bond).

Bechtel BWXT Idaho, LLC
Rev. 10-99

COST ESTIMATE SUMMARY

PROJECT NAME: WAG 3 - INT. TANK FARM ACTION
INSTA COAT/ROAD OYL RME
LOCATION 1: INTEC - TANK FARM
RE[illegible]OR: P. J. JESSMORE

TYPE OF ESTIMATE: ROM
PROJECT NO: 2960-3
PREPARED BY: T. R. MITCHELL
REPORT NAME: Cost Estimate Summary

DATE: 05-Jan-2000
TIME: 08:31:16
CHECKED BY: JS
APPR'D BY:

WBS Element	Cost Estimate Element	Total Unescalated	Escalation	Total Incl Escalation
1.3	CONSTRUCTION			>> $1,213,218
1.3.1	GENERAL CONDITIONS	109,619	3,289	112,908
1.3.2	SITEWORK	395,706	11,871	407,577
1.3.7	THERMAL & MOISTURE PROTECTION	672,556	20,177	692,733
1.4	GOVERNMENT FURNISHED EQUIP.			>> $33,936
1.4.1	GOVERNMENT FURNISHED EQUIP.	33,600	336	33,936
1.5	G&A/PIF			>> $198,307
1.5.1	G&A/PIF ADDER	192,531	5,776	198,307
1.5.2	PROCUREMENT FEES	36,344	1,070	>> $37,414
	SUBTOTAL INCLUDING ESCALATION	1,440,356	42,519	>> $1,482,875
	PROJECT CONTINGENCY			
	MANAGEMENT RESERVE			>> $148,287
	CONTINGENCY			>> $341,838
	TOTAL ESTIMATED COST			>> $1,973,000

PROJECT COST PARAMETERS

EDI AS A % OF CONST. + GFE= *0.00%*

CONTINGENCY= *33.05%*

Bechtel BWXT Idaho, LLC
Rev 10-99

DETAILED COST ESTIMATE SHEET

PROJECT NAME: WAG 3 - INT. TANK FARM ACTION
INSTA COAT/ROAD OYL RME
LOCATION 1: INTEC - TANK FARM
REQUESTOR: P. J. JESSMORE

TYPE OF ESTIMATE: ROM
PROJECT NO.: 2960-3
PREPARED BY: T. R. MITCHELL

DATE 05-Jan-2000
TIME: 12:23:11
REPORT NAME: Detail Cost Estimate Sheet

CODE	DESCRIPTION	QTY	UOM	MATL UNIT COST	CREW SUB	UNIT LAB HOURS	TOTAL LAB HRS	LABOR	CONST. EQUIP.	MAT'L	S/C (OTHER 1)	TOTAL COST
1.3.1	GENERAL CONDITIONS											
	Non-working Supervision	16	Days		GEN	0.000					3,200	3,200
	Plane Fare (Round Trip)	1	LS		GEN	0.000					1,000	1,000
	Equipment Mobilization	1	LS		GEN	0.000			10,000			10,000
	Contaminated Boxes	20	Each		GEN	0.000					10,000	10,000
	Safety and Site Specific Training (30 persons)	40	Hrs		LABR GEN	30.000	1,200	36,108				36,108
	Const. Aids Barricades and Safety Devices	1	LS		GEN	0.000			1,000		3,000	4,000
	Jobsite Layout and Survey (3 person crew)	3	WKS		SURV GEN	120.000	360	11,246				11,246
	Layout and Survey Equipment	120	HRS		GEN	0.000			3,000			3,000
	Punch List and Project Closeout	1	LS		CARP GEN	40.000	40	1,386				1,386
	Decontamination and Demobilization	1	LS		Z-7130 LMITCO	100.000	100	4,472	1,000		1,000	6,472
	GENERAL CONDITIONS S/T						1,700	$53,212	$15,000		$18,200	$86,412
1.3.2	SITEWORK											
	Reject Sand Fill Under Paving for Compaction	375	CY	15.00	EQMD GEN	0.500	188	6,225		5,625		11,850
	Engineered Bridges at Duct Banks	5	Each	500.00	IRON GEN	30.000	150	6,024	1,000	2,500		9,524
	Move Each Bridge 3 times	15	moves		IRON GEN	2.000	30	1,205			1,125	2,330
	Remove and Dispose of Bridges	5	Each		IRON GEN	2.000	10	402			125	527

Bechtel BWX[illegible]ho, LLC
Rev 10-99

DETAILED COST E[illegible]ATE SHEET

PROJECT NAME: WAG 3 - INT. TANK FARM ACTION
INSTA COAT/ROAD OYL RME
LOCATION 1: INTEC - TANK FARM
REQUESTOR: P. J. JESSMORE

TYPE OF ESTIMATE: ROM
PROJECT NO.: 2960-3
PREPARED BY: T. R. MITCHELL

DATE 05-Jan-2000
TIME: 12:23:11
REPORT NAME: Detail Cost Estimate Sheet

CODE	DESCRIPTION	QTY	UOM	MATL UNIT COST	CREW SUB	UNIT LAB HOURS	TOTAL LAB HRS	LABOR	CONST. EQUIP.	MAT'L	S/C (OTHER 1)	TOTAL COST
1.3.2	SITEWORK											
	Regrade Site w/Equipment	60,000	SF		LABR GEN	0.010	600	18,054			1,200	19,254
	Regrade Site w/ Hand Labor and Equipment	140,000	SF		LABR GEN	0.020	2,800	84,252			1,400	85,652
	Flash Around Penetrations	1	LS	35,000.00	LABR GEN	1500.00	1,500	45,135		35,000		80,135
Memo:	Crushed Gravel Aggregate Hauled and Stock Piled Local Vendor Quote	475	SF		GEN	0.000					14,250	14,250
Memo:	ROAD OYL RME Delivered to Bulk Storage Site Vendor Quote	60,000	SF		GEN	0.000					54,000	54,000
	Storage of ROAD OYL RME and Aggregate	60,000	SF		GEN	0.000					3,000	3,000
	Placement and compaction of mix w/Equipment	60,000	SF		GEN	0.000					24,000	24,000
	SITEWORK S/T						5,278	$161,296	$1,000	$43,125	$99,100	$304,521
1.3.7	THERMAL & MOISTURE PROTECTION											
Memo:	Insta Coat (140,000 SF) Vendor Quote	140,000	SF	3.50	GEN	0.000				490,000		490,000
	Install Insta Coat (2 Member crew)	2	Crew		ROHE GEN	112.000	224	6,740				6,740
	THERMAL & MOISTURE PROTECTION S/T						224	$6,740		$490,000		$496,740
1.4.1	GOVERNMENT FURNISHED EQUIP.											
Memo:	Spray on equipment Vendor Quote	1	LS	32,000.00	LMITCO	0.000				32,000		32,000
	GOVERNMENT FURNISHED EQUIP. S/T						0			$32,000		$32,000

Bechtel BWXT Idaho, LLC
Rev 10-99

DETAILED COST ESTIMATE SHEET

PROJECT NAME: WAG 3 - INT. TANK FARM ACTION
INSTA COAT/ROAD OYL RME
LOCATION 1: INTEC - TANK FARM
REQUESTOR: P. J. JESSMORE

TYPE OF ESTIMATE: ROM
PROJECT NO.: 2960-3
PREPARED BY: T. R. MITCHELL

DATE 05-Jan-2000
TIME: 12:23:11
REPORT NAME: Detail Cost Estimate Sheet

CODE	DESCRIPTION	QTY	UOM	MATL UNIT COST	CREW SUB	UNIT LAB HOURS	TOTAL LAB HRS	LABOR	CONST. EQUIP.	MAT'L	S/C (OTHER 1)	TOTAL COST
1.5.1	G&A/PIF ADDER Construction G&A - Year One	1	Lot		LMITCO	0.000					144,072	144,072
	Performance Incentive Factor (PIF) - Year One	1	Lot		LMITCO	0.000					48,459	48,459
	G&A/PIF ADDER S/T						0				$192,531	$192,531
	PROJECT SUBTOTAL						7,202	$221,249	$16,000	$565,125	$309,831	$1,112,205

Bechtel BW[illegible]aho, LLC

PROJECT: WAG 3 - INT. TANK FARM ACTION
INSTA COAT/ROAD OYL RME
LOCATION: INTEC - TANK FARM
ESTIMATOR: T. R. MITCHELL
CLIENT: P. J. JESSMORE

CONTRACTOR MARKUP DI[illegible]UTION REPORT

DATE: January 5, 2000
ESTTYPE: ROM
PROJECT NO: 2960-3

CONTRACTOR		LABOR HOURS	LABOR	MATERIAL	EQUIPMENT	OTHERS	SUBTOTAL	% MARKUP	% DIRECT COST	% TOTAL COST
PRIME CONTRACTOR			$0	$0	$0	$0	$0		0.00%	0.00%
TOTAL FOR PRIME CONTRACTOR		0	*$0*	*$0*	*$0*	*$0*	*$0*	***.**%		
GENERAL CONTRACTOR - GEN			$216,777	$559,781	$15,000	$116,300	$907,858		99.29%	77.08%
BOND	2.00%		$4,336	$11,196	$300	$2,326	$18,157	2.00%		
PROFIT	10.00%		$22,111	$57,098	$1,530	$11,863	$92,601	10.20%		
OVERHEADS	15.00%		$36,483	$94,211	$2,524	$19,573	$152,792	16.83%		
TOTAL FOR GENERAL CONTRACTOR - GEN		7,102	*$279,707*	*$722,286*	*$19,355*	*$150,062*	*$1,171,409*	29.03%		
LMITCO - LMITCO			$4,472	$0	$1,000	$1,000	$6,472		0.71%	0.55%
	%		$0	$0	$0	$0	$0	0.00%		
TOTAL FOR LMITCO - LMITCO		100	*$4,472*	*$0*	*$1,000*	*$1,000*	*$6,472*			
TOTAL DIRECT COST		7,202	$221,249	$559,781	$16,000	$117,300	$914,330		100.00%	
TOTAL SUBCONTRACTOR MARKUPS			$62,930	$162,505	$4,355	$33,762	$263,551			22.38%
TOTAL COST TO PRIME			$284,179	$722,286	$20,355	$151,062	$1,177,881			
PRIME CONTRACTOR MARKUP	0.00%		$0	$0	$0	$0	$0			0.00%
TOTAL PROJECT COST			**$284,179**	**$722,286**	**$20,355**	**$151,062**	**$1,177,881**			

Bechtel BWXT Idaho, LLC

CONTINGENCY ANALYSIS

PROJECT NAME: WAG 3 - INT. TANK FARM ACTION
INSTA COAT/ROAD OYL RME
LOCATION 1: INTEC - TANK FARM
REQUESTOR: P. J. JESSMORE

TYPE OF ESTIMATE: ROM
PROJECT NO: 2960-3
PREPARED BY: T. R. MITCHELL

DATE: 05-Jan-2000
TIME: 08:31:12

REPORT NAME: Contingency Analysis

PROBABLE % VARIATION									PROJECT CONTINGENCY		SUMMARY
WBS Element	Cost Estimate Element	Total Cost w/o Contingency	% Total Cost	Prob. % Var. From Est. -	Prob. % Var. From Est. +	Wt. % of Prob. -	Wt. % of Prob. +	Contingency	%	Cost	Total Cost by Element
1.3.1	GENERAL CONDITIONS	109,619	7.39	5	40	0.37	2.96	2.624%	7.95%	38,959	148,578
1.3.2	SITEWORK	395,706	26.69	5	40	1.33	10.67	9.473%	28.69%	140,635	536,341
1.3.7	THERMAL & MOISTURE PROTECTION	672,556	45.35	5	35	2.27	15.87	14.060%	42.59%	208,728	881,284
1.4.1	GOVERNMENT FURNISHED EQUIP.	33,600	2.27	10	35	0.23	0.79	0.691%	2.09%	10,260	43,860
1.5.1	G&A/PIF ADDER	192,531	12.98	10	40	1.30	5.19	4.544%	13.76%	67,462	259,993
1.5.2	PROCUREMENT FEES	36,344	2.45	10	35	0.25	0.86	0.748%	2.26%	11,097	47,441
	ESCALATION	42,519	2.87	10	35	0.29	1.00	0.875%	2.65%	12,984	55,503
	SUBTOTAL	1,482,875	100.00					33.015%			
	CALCULATED CONTINGENCY	489,570									
	RESULTANT TEC	1,972,445									
	ROUNDED TEC	1,973,000									
	PROJECT CONTINGENCY	490,125						33.05%			
	MANAGEMENT RESERVE	148,287									
	CONTINGENCY	341,838									
	TOTAL ESTIMATED COST	1,973,000								490,125	1,973,000

CONFIDENCE LEVEL AND ASSUMED RISKS:
The Bechtel BWXT Idaho, LLC Cost Estimate Contingency Analysis Model is based on the applied contingency and the assumptions upon which the estimate was predicated. The model is applied with a suggested risk level of 18% and a level of confidence of 90% the estimate will fall within the bid range. The Contingency Analysis is based on a weighted average to provide a 90 % probability of underrun and a 10% probability of overrun.

CONTINGENCY ANALYSIS GUIDE BY TYPE OF ESTIMATE
Guidelines established by DOE/FM 50, Cost Estimating Guide, Vol. 6, Cost Guide, and as presented in the INEEL Cost Estimating Guide.

PLANNING	20% – 30%
Experimental/Special Conditions	Up to 50%
Conceptual	15% – 25%
Experimental/Special Conditions	Up to 40%
TITLE I	10% – 20%
TITLE II	5% – 15%
TITLE II/AFC	Market Conditions

G & A and PIF Worksheet

Project: INTEC TANK FARM (INSTA COAT/ROAD OYL RME)

Estimate No.: 2960-3

Estimator: T.R. Mitchell

Date: 1/5/00

Total Construction Cost	$	1,177,881
Construction Procurement Fee - 3.5	$	33,600
Total GFE Cost	$	-
GFE Procurement Fee - 3.5%	$	-

Construction Cost

Construction Cost - Year 1	$	1,177,881	
GFE Cost - Year 1	$	-	
Subtotal	$	1,177,881	$ 1,177,881

G & A @ 27% With A $500,000 Construction Ceiling ($135,000)

			G & A		Amount
Construction Cost - Year 1	$	1,177,881	27%	$	135,000
Procurement Cost	$	33,600	27%	$	9,072
GFE Cost - Year 1	$	-	27%	$	-
GFE Procurement Cost	$	-	27%	$	-
Subtotal				$	144,072

$ 144,072

Performance Incentive Factor (PIF) @ 4.0% - No Ceiling

			PIF		
Construction Cost - Year 1	$	1,177,881	4.0%	$	47,115
Procurement Cost	$	33,600	4.0%	$	1,344
GFE Cost - Year 1	$	-	4.0%	$	-
GFE Procurement Cost	$	-	4.0%	$	-
Subtotal				$	48,459

$ 48,459

Total Adders $	$ 192,531
Total Cost	$ 1,370,412
Total Adder %	16%

Appendix C

Comment Responses

The subject EDF documents information discussed/presented in a meeting held on November 18, 1999. IDHW/DEQ comments suggesting addition of information that was not presented/discussed in the meeting have not been incorporated, but have been explained for clarification purposes, in the comment responses provided below.

Document ID: EDF-ER-115

Document Title: Operable Unit 3-13 Tank Farm Interim Action Group 1 Soils Decision Analysis Study

Revision ID: 0

IDHW/DEQ Comments

Item No.	Page No. /Section	Review Comment	Resolution
1	General Comment	IDHW/DEQ is attaching information regarding another sealant product that we believe should receive consideration.	We reviewed the EKOR information provided, researched the product and talked to EKOR respresentative (Don Hahnfeldt). This product was developed to stabilize and contain radioactive waste. However, this is not one of the criteria for the TFIA. The tank farm surface soils provide adequate shielding for the underlying material which is contaminated. After reading the literature and discussing the product with the Don Hahnfeldt, the following items were noted with respect to the TFIA: • EKOR has never been applied or evaluated for vehicular traffic. • EKOR requires up to 24 hours to set after the application. • Tensile strength is approximately 284 psi (the proposed polyureas are approximately 2,000 psi). • Adhesion shear strength to a variety of surfaces is approximately 280 psi. • Specific elongation at a rupture is 30%. The elongation for the polyureas is close to 400% Mr. Hahnfeldt indicated we could perform some tests and they could possibly come up with a formulation that may work for our situation. Based on these factors, we do not recommend EKOR as a viable selection for lining the tank farm.

Item No.	Page No. /Section	Review Comment	Resolution
2	General Comment	It is our understanding that a field demonstration is planned to test several polyurea spray-on products. IDHW/DEQ would like to be notified regarding the scope and scheduling of this field demonstration.	Currently, three vendors are scheduled to participate in a demonstration scheduled for early April 2000. Each vendor will apply their particular product(s) to an approximate 900 ft^2 area at INTEC, in a location similar to the tank farm area. The demonstrated products will be evaluated against set performance criteria, contained in a demonstration plan currently being written. This plan will be provided for information upon completion.
3	General Comment	On the basis of the January 27 tri-agency conference call, it is our understanding that USDOE believes there are some cost savings that can result from using a polyurea product for a portion of Phase I activities. Further, we understand that USDOE would like to combine use of the spray-on product proposed in Phase I with Phase II activities so that all the spray-on sealing process is conducted in one mobilization effort. IDHW/DEQ suggests that schedule implications regarding this proposal be discussed at the meeting in Seattle during February 7-11.	If the building gutter systems are upgraded, a large portion of the control zone will not be covered, and therefore infiltration will not be reduced to the extent possible. It was therefore proposed, that polyurea be applied to the entire control zone, in lieu of upgrading the building drainage systems, because all precipitation within the 150 ft control zone would be eliminated from infiltrating into the subsurface. Currently, there are no schedule implications/delays expected as a result of this proposal.
4	1.1.3, pg 3 First complete paragraph on page	The text states that it is permissible to change the current surface grade within the same zone. It is unclear whether there is a minimal amount of soil cover needed to provide an effective radiation shield during the installation of the preferred cover. Please clarify.	As presented in Appendix A (last paragraph under "Background Information"), the soil on the tank farm was originally used for shielding, but is no longer necessary due to the lower radiation levels. A minimal amount of soil is necessary however, to protect the underground tanks/piping, etc, from the elements.

Item No.	Page No. /Section	Review Comment	Resolution
5	Section 2.1, Page 3, First Bullet	This assumption is somewhat unclear. Please provide a brief discussion of anticipated grading and potential soil disposal.	At the time this meeting was held, a grading plan had not been prepared, and the assumption was therefore made that grading to produce positive drainage would be necessary regardless of what option was selected to cover the tank farm. Because the grading plan was not available, it was unknown if cuts and fills associated with the grading would produce excess soil, or if all of the soil could be accommodated within the tank farm. Our current strategy is to balance cut and fill material to minimize excess soil, however, a Waste Management Plan is being prepared to address potential soil disposal.
6	Section 2.1, Page 3, Table 1	The text should include a discussion explaining why Durability of Material was deleted from consideration.	Durability of Material was deleted from the criteria because the meeting participants agreed that is was included as a subset of the long term costs, and was therefore a redundant criteria.
7	Section 3.2, Page 5, Table 3	a) The cure time for the InstaCoat should be provided in the context of a pro or con. b) Any incompatibilities should be discussed, as was done with RoadOyl and resistance to gasoline.	The pros and cons are a result of what was presented and documented during the November 18th meeting. The cure time and incompatabilities for InstaCoat were not discussed, however, the cure time is considered a pro, and we have since learned that the instacoat or similar polyurea products will not be incompatible with anything used at the tank farm.
8	Section 4, page 9, paragraph 1, fourth sentence	It is unclear whether the text is advocating the US ARMY (PSB) track system in conjunction with the InstaCoat surface, or whether the preference is for a RoadOyl/InstaCoat blend for addressing traffic loading concerns (as presented in Option 5 of the Attachment). If the PSB system is to be considered, then this document should present the additional cos, availability, and implementability concerns (e.g., must the track system be installed and removed each time vehicular access is needed?; discuss the load-bearing and weight distribution factors to be considered). Please clarify the recommendation with respect to high traffic areas.	The use of the PSB track system was a brainstorming suggestion/option as stated in Section 4, which was given no further consideration. Presentation of this idea was included in the EDF to document the idea. As stated in Section 4, Final Phase 2 Recommendation, InstaCoat scored the highest points using the Kepner-Tregoe Decision Process, and is therefore the final recommendation. This final recommendation is also stated in the summary section (Section 5) on Form 431.02, presented in the front of the document. We have since learned that polyureas will handle routine tank farm traffic if it is applied to a good base course, which is currently part of the design.

The subject EDF documents information discussed/presented in a meeting held on November 18, 1999. EPA comments suggesting addition of information that was not presented/discussed in the meeting have not been incorporated, but have been explained for clarification purposes, in the comment responses provided below.

Document ID: EDF-ER-115

Document Title: Operable Unit 3-13 Tank Farm Interim Action Group 1 Soils Decision Analysis Study

Revision ID: 0

EPA Comments

Item No.	Page No./Section	Review Comment	Resolution
1	General Comment	After reviewing the EDF and reflecting on conference call discussions, EPA concurs with the recommendation to use InstaCoat as a surface sealer for the Tank Farm and surrounding area. Concurrence is contingent on the results of the on-site demonstration and feedback from outside parties with long-term experience using this product.	Currently, three vendors are scheduled to participate in a demonstration scheduled for early April 2000. Each vendor will apply their particular product(s) to an approximate 900 ft^2 area at INTEC, in a location similar to the tank farm area. The demonstrated products will be evaluated against set performance criteria contained in the demonstration plan, currently being written. This plan will be provided for information upon completion.
2	General	A suggestion was made following the decision analysis process, that a removable metal track system might be used to protect the InstaCoat surface. This suggestion indicates that there is uncertainty about some of the assumptions used to rate the options in the decision matrix. Assumptions about the nature of traffic in the tank farm area are not listed in this document (i.e. traffic frequency, fixed or random pathways, percentage of heavy equipment). The ability of InstaCoat to hold up under traffic loads is not documented. Internet information on InstaCoat lists adhesive, abrasive, and chemical resistance properties, but not its compressive strength property. If assumptions do not hold true, the decision matrix should be re-visited to determine if a hybrid of InstaCoat and RoadOyl or InstaCoat and a metal track system are preferable options.	The use of the PSB track system was a brainstorming suggestion/option as stated in Section 4, which was given no further consideration. Presentation of this idea was included in the EDF to document the idea. We have since learned that polyureas will handle routine tank farm traffic if it is applied to a good base course, which is currently part of the design. The durability of various polyurea products will be evaluated as part of the performance criteria, as outlined in the demonstration plan.

STATE OF IDAHO
DIVISION OF
ENVIRONMENTAL QUALITY

1410 North Hilton • Boise, Idaho 83706-1255 • (208) 373-0502

Dirk Kempthorne, Governor
C. Stephen Allred, Administrator

February 2, 2000

Ms. Kathleen Hain, Manager
Environmental Restoration Program
U.S. Department of Energy
Idaho Operations Office
850 Energy Drive
Idaho Falls, Idaho 83401-1563

RE: *Engineering Design File for the Operable Unit 3-13 Group I Interim Action, Phase I Decision Analysis Study*

Dear Ms. Hain:

The Idaho Department of Health and Welfare/Division of Environmental Quality (IDHW/DEQ) has completed its review of the above-referenced document, and provides the enclosed comments. Both general and specific comments are provided.

IDHW/DEQ received the Engineering Design File on January 6, 2000. Our review concerns were conveyed verbally to your staff on January 19. If you have any questions regarding these comments, please contact me at (208) 373-0306.

Sincerely,

Margie English

Margie English
WAG 3 Manager
IDHW/DEQ Technical Services Group

ME/jc

cc: Talley Jenkins, DOE-ID
Wayne Pierre, EPA Region X
Daryl Koch, DEQ-BOI

Enclosure

IDHW/DEQ Technical Review Comments on the Engineering Design File for the Operable Unit 3-13 Group 1 Interim Action, Phase I Decision Analysis Study
February 2, 2000

General Comments

1) IDHW/DEQ is attaching information regarding another sealant product that we believe should receive consideration.

2) It is our understanding that a field demonstration is planned to test several polyurea spray-on products. IDHW/DEQ would like to be notified regarding the scope and scheduling of this field demonstration.

3) On the basis of the January 27 tri-agency conference call, it is our understanding that USDOE believes there are some cost savings that can result from using a polyurea product for a portion of Phase I activities. Further, we understand that USDOE would like to combine use of the spray-on product proposed in Phase I with Phase II activities so that all the spray-on sealing process is conducted in one mobilization effort. IDHW/DEQ suggests that schedule implications regarding this proposal be discussed at the meeting in Seattle during February 7-11.

Specific Comments

4) <u>Section 1.1.3, Page 3, First Complete Paragraph on Page</u>

The text states that it is permissible to change the current surface grade within the same zone. It is unclear whether the there is a minimal amount of soil cover needed to provide an effective radiation shield during the installation of the preferred cover. Please clarify.

5) <u>Section 2.1, Page 3, First Bullet</u>

This assumption is somewhat unclear. Please provide a brief discussion of anticipated grading and potential soil disposal.

6) <u>Section 2.1, Page 3, Table 1</u>

The test should include a discussion explaining why *Durability of Material* was deleted from consideration.

7) Section 3.2, Page 5, Table 3

a) The cure time for the InstaCoat should be provided in the context of a pro or con.

b) Any incompatibilities should be discussed, as was done with RoadOyl and resistance to gasoline.

8) Section 4, Page 9, Paragraph1, Fourth Sentence

It is unclear whether the text is advocating the US ARMY (PSB) track system in conjunction with the InstaCoat surface, or whether the preference is for a RoadOyl/InstaCoat blend for addressing traffic loading concerns (as presented in Option 5 of the Attachment). If the PSB system is to be considered, then this document should present the additional cost, availability, and implementability concerns (e.g., must the track system be installed and removed each time vehicular access is needed?; discuss the load-bearing and weight distribution factors to be considered). Please clarify the recommendation with respect to high traffic areas.

UNITED STATES ENVIRONMENTAL PROTECTION AGENCY
REGION 10
1200 Sixth Avenue
Seattle, Washington 98101

Reply To
Attn Of: ECL-111

February 7, 2000

Ms. Katie Hain, Manager
Environmental Restoration Program
U.S. Department of Energy
Idaho Operations Office
785 DOE Place
Idaho Falls, Idaho 83402

Re: Review of Engineering Design File, Operable Unit 3-13 Tank Farm Interim Action Group 1 Soils Decision Analysis Study

Dear Ms. Hain,

After reviewing the Engineering Design File and reflecting on conference call discussions, EPA concurs with the recommendation to use InstaCoat as a surface sealer for the Tank Farm and surrounding area. Concurrence is contingent on the results of the on-site demonstration and feedback from outside parties with long-term experience using the product.

A suggestion was made following the decision analysis process, that a removable metal track system might be used to protect the InstaCoat surface. This suggestion indicates that there is uncertainty about some of the assumptions used to rate the options in the decision matrix. Assumptions about the nature of traffic in the tank farm area are not listed in this document (i.e. traffic frequency, fixed or random pathways, percentage of heavy equipment). The ability of InstaCoat to hold up under traffic loads is not documented. Internet information on InstaCoat lists adhesive, abrasive, and chemical resistance properties, but not its compressive strength property. If assumptions do not hold true, the decision matrix should be re-visited to determine if a hybrid of InstaCoat and RoadOyl or InstaCoat and a metal track system are preferable options.

Sincerely,

Kathy Ivy
Remedial Project Manager

cc: Margie English, IDHW
Tally Jenkins, DOE-ID
Dean Nygard, IDHW

Printed on Recycled Paper

L. Davison

Department of Energy

Idaho Operations Office
850 Energy Drive
Idaho Falls, Idaho 83401-1563

March 14, 2000

Mr. Wayne Pierre, Team Leader
Environmental Cleanup Office
U.S. Environmental Protection Agency
Region X
1200 Sixth Avenue
Seattle, Washington 98101

Mr. Dean Nygard, Bureau Chief
Idaho Department of Health & Welfare
Division of Environmental Quality
1410 N. Hilton
Boise, Idaho 83706

SUBJECT: Tank Farm Interim Action Preconceptual Design/Trade Study EDF – (EM-ER-48-00)

Dear Mr. Pierre and Mr. Nygard:

In the Final Remedial Design/Remedial Action Scope of Work for Waste Area Group 3, Operable Unit 3-13, Table 5-1, a Draft Preconceptual Design/Trade Study EDF was identified as a secondary document with a target date of March 14, 2000. This document was previously submitted on January 6, 2000, to the agencies for review and comment informally during a face to face meeting in Idaho Falls, Idaho. Comments were received from the state of Idaho and EPA on the document during the week of February 7, 2000. The comments and issues on the draft document have been discussed and resolved. The final version of the Preconceptual Design/Trade Study EDF will be included in the Draft Remedial Design/Remedial Action Work Plan (RD/RA WP) for Operable Unit 3-13 Tank Farm Interim Action (Group 1), which will be submitted to meet the May 4, 2000, FFA/CO enforceable milestone.

If you have any questions, please call Talley Jenkins at (208) 526-4978 or myself at (208) 526-4392.

Sincerely,

for

Kathleen Hain, Director
Environmental Restoration Division

cc: M. English, IDHW, DEQ, Community Programs, 1410 N. Hilton, Boise, Idaho 83706
K. Ivy, U.S. EPA, Region X, 1200 Sixth Avenue, Seattle, Washington 98101
T. Kluk, DOE-HQ, EM-441
R. Cummings, DOE-HQ, EM-441

Appendix E

Construction Specifications

Document ID : SPC- 269

Revision : 0

A-E CONSTRUCTION SPECIFICATION

SUBCONTRACT NO. **S00-588051**

PROJECT FILE NO. **020978**

OU 3-13 Group 1 Tank Farm Interim Action Phase 1 & 2

APPROVED FOR CONSTRUCTION

Prepared for:
U.S. Department of Energy
Idaho Operations Office
Idaho Falls, Idaho

INEEL
Idaho National Engineering & Environmental Laboratory
BECHTEL BWXT IDAHO, LLC

Form 412.14
10/05/99
Rev. 02

412.15
02/21/2000
Rev. 02

DOCUMENT MANAGEMENT CONTROL SYSTEM (DMCS)
DOCUMENT APPROVAL SHEET

Document Type: CONSTRUCTION SPECIFICATION

Document Identifier: SPC-269

Title: OU 3-13 Group 1 Tank Farm Interim Action Phase 1 & 2

Project No. (if applicable): 020978

Author: K. D. Fritz

Phone: 526-4914

Document Owner: M. S. Kaptein

Phone: 526-5938

REVIEW CONCURRENCE AND APPROVAL SIGNATURES
Denote R for review concurrence, A for approval, as appropriate.

Type or printed name	R/A	Date	Organization Discipline	Mailing Address
Signature				
Kurt D. Fritz, P.E.		9/5/00	6780 Technical Coordinator	MS 3650
Larry J. Hill, P.E.		9-5-2000	ANL-W Electrical Engineer	MS 6000
Steve A. Davies, P.E.	A	9/05/00	6710 Project Engineer	MS 3650
Michelle Kaptein	A	9/11/00	3150 Project Manager	MS 3953
Released by BBWI Document Control, 6-1201	A		24A0 Document Control	MS 3640

OU 3-13, Group 1, Tank Farm Interim Action Phase 1 & 2

The following Sections of this Specification were prepared under the direction of the Professional Engineer as indicated by the seal and signature provided on this page. The Professional Engineer is registered in the State of Idaho to practice Civil Engineering.

PROFESSIONAL ENGINEER
REGISTERED
9404
9/5/00
STATE OF IDAHO
KURT D. FRITZ

DIVISION 1-GENERAL REQUIREMENTS

01005 Summary of Work
01051 Construction Surveying and Staking
01300 Submittals

DIVISION 2-SITE WORK

02062 Demolition and Repairs
02200 Earthwork
02430 Culverts and Trench Drains
02444 Chain Link Fence
02486 Revegetation
02514 Asphalt Concrete Patching
02598 Pond Liners

DIVISION 3-CONCRETE

03301 Cast In-Place Concrete
03400 Precast Concrete

DIVISION 9-FINISHES

09810 Polyurea Spray-on Coating

DIVISION 15-MECHANICAL

15401 Underground Piping and Plumbing Systems
15480 Stormwater Lift Station
15481 Sump Pump and Accessories

OU 3-13, Group 1, Tank Farm Interim Action Phase 1 & 2

The following Sections of this Specification were prepared under the direction of the Professional Engineer as indicated by the seal and signature provided on this page. The Professional Engineer is registered in the State of Idaho to practice Electrical Engineering.

PROFESSIONAL ENGINEER
REGISTERED
9502
STATE OF IDAHO
LARRY J. HILL

9-5-2000

DIVISION 16-ELECTRICAL

16000 Electrical General Provisions
16109 Switches, Receptacles and Wall Plates
16110 Electrical Raceways
16120 Cable, Wire, Connectors and Miscellaneous Devices
16195 Electrical Identification
16370 Manual Transfer Switches 600V and Less
16450 Grounding

SECTION III
SPECIFICATIONS
FOR
OU 3-13, GROUP 1, TANK FARM INTERIM ACTION PHASE 1 & 2

Prepared for:

U.S. DEPARTMENT OF ENERGY
IDAHO OPERATIONS OFFICE

Idaho Falls, Idaho

SubContract No. S00-588051
SPC No. 269

August 2000

Bechtel BWXT Idaho, LLC
Idaho Falls, Idaho 83415

TABLE OF CONTENTS
OU 3-13, GROUP 1, TANK FARM INTERIM ACTION PHASE 1 & 2

TITLE	Number of pages in Section
DIVISION 1 – GENERAL REQUIREMENTS	
01005 SUMMARY OF WORK	4
01051 CONSTRUCTION SURVEYING AND STAKING	3
01300 SUBMITTALS	8
DIVISION 2 – SITE AND CIVIL ENGINEERING	
02062 DEMOLITION AND REPAIRS	2
02200 EARTHWORK	6
02430 CULVERTS AND TRENCH DRAINS	3
02444 CHAIN LINK FENCING	4
02486 REVEGETATION	3
02514 ASPHALT CONCRETE PATCHING	4
02598 POND LINERS	10
DIVISION 3-CONCRETE	
03301 CAST IN PLACE CONCRETE	6
03400 PRECAST CONCRETE	5
DIVISION 9-FINISHES	
09810 POLYUREA SPRAY-ON COATING	17
DIVISION 15-MECHANICAL	
15401 UNDERGROUND PIPING AND PLUMBING SYSTEMS	4
15480 STORMWATER LIFT STATION	5
15481 SUMP PUMP AND ACCESSORIES	3
DIVISION 16-ELECTRICAL	
16000 ELECTRICAL GENERAL PROVISIONS	4
16109 SWITCHES, RECEPTACLES AND WALL PLATES	2
16110 ELECTRICAL RACEWAYS	3
16120 CABLE, WIRE, CONNECTORS AND MISCELLANEOUS DEVICES	4
16195 ELECTRICAL IDENTIFICATION	7
16370 MANUAL TRANSFER SWITCHES 600V AND LESS	2
16450 GROUNDING	2

TABLE OF CONTENTS
OU 3-13, GROUP 1, TANK FARM INTERIM ACTION PHASE 1 & 2

TITLE	Number of pages in Section
ATTACHMENTS	
Vendor Data Schedule	
MCP-P7.5 Tank Farm Load Limitations	
Area Vehicle Loads Map, Dwg 097726	

SECTION 01005--SUMMARY OF WORK

PART 1--GENERAL

SUMMARY:

The Subcontractor shall furnish plant, labor, material, equipment, supplies and perform work and operations necessary to construct the upgrades to the INTEC Storm Drainage System and Tank Farm complete, in accordance with the subcontract drawings and these specifications.

Section Includes: As shown on the contract drawings, work includes, but is not limited to:

Re-grading areas to improve drainage and coating with a polyurea spray-on coating and asphalt concrete paving.

Upgrading of the Storm Drainage System including: installing a lift station, new concrete ditches, installing or replacing corrugated metal pipe culverts, catch basins, and concrete head walls and end walls.

Construction of a lined evaporation pond.

REFERENCES:

The following documents, including others referenced therein, form part of this Section to the extent designated herein.

CODE OF FEDERAL REGULATIONS (CFR)

29 CFR 1910 OSHA General Industry Safety Standards
29 CFR 1926 OSHA Construction Industry Safety Standards

BECHTEL BWXT IDAHO, LLC (BBWI)

Construction Management Environmental, Health and Safety Requirements

Health and Safety Plan for Waste Area Group 3, Operable Unit 3-13, Group 1 Soils, Tank Farm Interim Health Action, RD/RA Phase 1 and 2

Emergency Preparedness Plan - Addendum 2 (ICPP [INTEC]), Latest Revision, Company Wide Manual 16A-2, PLN-114-2

Unless otherwise specified, references in these specifications or on the subcontract drawings to other specifications, codes, standards or manuals which are part of these specifications, but

not included herein, shall be the latest edition, including any amendments and revisions, in effect as of the date of this Specification.

SUBMITTALS:

See Section 01300, Submittals.

QUALITY ASSURANCE:

Quality Assurance Program requirements shall exist to assure that work performed is in conformance with the requirements established by the drawings and this specification. QA Program criteria applicable to this scope of work is addressed in SC-5 of the Special Conditions and these specifications.

Standard Products: The materials and equipment furnished by the Subcontractor shall be standard products of manufacturers regularly engaged in the production of the type of materials and equipment required and shall be of the manufacturer's latest standard designs. Where two or more units of the same type and class of material or equipment are required, the units shall be the product of the same manufacturer, and shall be identical insofar as possible. The component parts of a unit of equipment need not be the products of the manufacturer.

Repair of Damages:

General: Construction materials and equipment, flange facings, threads, machined or painted, and other exposed finished surfaces shall be protected from damage at all times during shipping, handling, construction and installation. Materials and equipment repaired or replaced by the Subcontractor shall be subject to acceptance by the Contractor.

SAFETY, HEALTH AND ENVIRONMENT:

All work shall be conducted in compliance with the Health and Safety plan for the WAG 3, 0U 3-13, Group 1, Tank Farm Interim action RD/RA Phase 1 and 2.

In general work shall be in compliance with the applicable sections of 29 CFR 1910, 29 CFR 1926 and the BECHTEL BWXT Construction Management Environmental, Health, and Safety Requirements.

DELIVERY STORAGE AND HANDLING

All materials normally packaged shall be delivered to the site in the original, unopened packages with labels intact. Upon arrival, the Subcontractor shall inspect the materials or equipment for damage.

Materials and equipment shall be stored and handled in accordance with the manufacturer's instructions.

All hazardous materials shall be stored in such a manner to prevent spillage. Preventative spill measures shall be required and implemented per the manufacturer's specifications. Preventative spill measures and spill response activities shall be conducted in accordance with the project Health and Safety Plan and the INEEL Emergency Preparedness Plan - Addendum 2 (ICPP [INTEC]), Latest revision.

PART 2--PRODUCTS

MATERIALS:

New Materials and Equipment: Materials and equipment received by the Subcontractor in a damaged condition shall be repaired or replaced by the Subcontractor as directed by the Contractor. Materials and equipment damaged by the Subcontractor shall be repaired or replaced by the Subcontractor.

Existing Materials, Equipment and Structures: Existing materials, equipment and structures, including paint and protective coatings, involved under this Subcontract shall be thoroughly inspected by the Subcontractor before starting any work. Any defects or damages, the repair of which are not covered under these specifications or subcontract drawings, shall be reported in writing to the Contractor by the Subcontractor. The Subcontractor shall place reinstalled operating equipment in an operating condition that is at least as good as it was at the time the Subcontractor started work.

Hazardous Chemicals and Substances: The Subcontractor shall comply with applicable requirements of 29 CFR 1926.59, Hazard Communication Standard.

PART 3--CONSTRUCTION AND INSTALLATION

General: Materials and equipment shall be erected or installed only by qualified personnel who are regularly engaged in the trades required to complete the work. The subcontract drawings show the general arrangement and space allocation of the equipment specified. It shall be the Subcontractor's responsibility to verify changes in conditions or rearrangements necessary because of substitutions for specified materials or equipment. Where rearrangements are necessary the Subcontractor shall, before construction or installation, prepare and submit drawings of the proposed rearrangement for approval.

Coordination of Work: Where new work and existing facilities are shown on the drawings, but are not located precisely by dimensions, the Subcontractor shall be responsible for proper location and clearances and for correcting discrepancies and interferences in the work which are a result of his operations. Work done by one trade that must be integrated with work of other trades shall be laid out with due regard to the work done, or to be done, by other trades;

particularly if the work done by one trade depends upon completion or proper installation of work done by other trades. The Subcontractor shall cooperate in coordinating his work with work being done by others if their work must be integrated with the Subcontractor's work. The Subcontractor shall notify the Contractor at least one week prior to starting of the date on which the Subcontractor proposes to proceed with the work.

Workmanship: Work shall be done in a skillful and workmanlike manner. The Subcontractor shall do structural cutting, fitting, patching, repairing and associated work necessary for installation of equipment, piping and electrical conduits, etc. No major cuts or holes, not shown on the drawings, shall be made without prior approval of the Contractor. After the equipment and/or piping is installed, exposed holes, cracks and other defects shall be neatly patched and the patched areas shall match the adjoining materials and finish.

END OF SECTION 01005

SECTION 01051--CONSTRUCTION SURVEYING AND STAKING

PART 1--GENERAL

SUMMARY:

Section Includes: Work includes, but is not limited to:

Establish vertical and horizontal control, slope staking, pipe layout and alignment, and set grade-finishing stakes.

All coordinates are based on INTEC site-specific horizontal coordinates and NRTS vertical datum. NRTS vertical is 0.35 ft. higher than INTEC vertical datum.

SUBMITTALS:

Submittals include but are not limited to the following:

Certification: Submit certification that the land surveyor is a registered professional.

Logbook: Copies of logbook entries shall be submitted upon completion.

See Section 01300, Submittals and Vendor Data Schedule for additional requirements.

QUALITY CONTROL:

Qualifications: Construction surveying and staking shall be accomplished under the direction of a registered professional land surveyor.

PART 2--PRODUCTS

Stakes: Identification stakes and hubs shall be of sufficient length, width and depth to provide a solid set in the ground and to provide space for marking above ground when applicable. The top 2-in. of all slope, guard, reference, clearing, and structure stakes shall be painted or marked with plastic flagging.

PART 3--EXECUTION

SURVEY REQUIREMENT:

Precision: Precision and accuracy requirements are contained in Table 1. The following precisions shall be used:

- Slope Staking Precision B

Finish Staking, Subbase Course - Precision B
Finish Staking, Base Course - Precision A (Includes Tank Farm Grading)
Pipe Layout and Alignment - Precision B

Control: Existing control monuments can be located through the INEEL Construction Management (526-3597).

Slope Stakes, Clearing Limits and Reference Stakes: Slope catch-points, clearing limits, and slope reference stakes shall be established. The position of these stakes shall be determined by methods that will produce on the ground the precisions shown in the Table 1.

Clearing limits shall be set within the tolerance shown in the Table 1. The clearing limit shall be located on the ground and marked with lath, flagging, or other methods approved by the Contractor's Representative.

The elevation and location of slope reference stakes shall be verified for accuracy by a differential level run over the reference stakes between benchmarks.

Pipe Layout and Alignment: Pipeline layout and clearing limits shall be established. The position of these stakes shall be determined methods that will produce, on the ground, equal to Precision B as shown on Table 1.

Monuments of Property Boundaries or Surveys of Other Agencies: If property boundary or survey monuments, or survey markers of other agencies, are found within or adjacent to the construction limits, the Subcontractor shall immediately notify the Contractor's Representative. These monuments shall not be disturbed.

Grade Finishing Stakes: Finishing stakes are required on the subbase, crushed base course, tank farm grading, and grading areas required for polyurea spray-on coating. Stakes shall be set on a 50-ft grid (25-ft. grid on Tank Farm) and at the shoulders. Subgrade finishing stakes shall be red tops and base course finishing stakes shall be blue tops. Grade stakes are required for tank farm grading and polyurea coating areas to verify a minimum slope of 0.50% towards the drainage ditches.

Finishing stakes shall be set when subbase is within 0.2 ft, or base course is within 0.1 ft of final grade. The stakes shall be set to the nearest 0.01 ft of the measured grade line.

TABLE 1. CROSS SECTION AND SLOPE-STAKE PRECISION

Item	Precision		
	A	B	C
Cross section topography measurements shall be taken so that variations in ground from a straight line connecting the cross section points will not exceed:	0.5 ft	1.0 ft	2.0 ft
Horizontal and vertical accuracy for cross-sections. In feet or percentage of horizontal distance measured from transverse line, whichever is greater.	.05 ft or 0.2%	0.15 ft or 0.6%	0.2 ft or 1.0%
Horizontal and vertical accuracy for slope stake, slope stake references, and clearing limits. In feet or percentage of horizontal distance measured from centerline or reference stake, whichever is greater.			
a. Slope reference stakes and slope stakes.	0.1 ft or 0.4%	0.15 ft or 0.6%	0.2 ft or 1.0%
b. Clearing limits.	1.0 ft	1.0 ft	1.0 ft

FIELD QUALITY CONTROL:

Surveillance will be performed by the Contractor's Representative to verify compliance of the work to the drawings and specifications.

END OF SECTION 01051

SECTION 01300--SUBMITTALS

PART 1--GENERAL

SUMMARY:

This section specifies the administrative, technical and quality requirements for Vendor Data submittals. Vendor Data requirements are identified in individual specification sections and tabularized on a Vendor Data Schedule. In the event of conflicting requirements, the submittal requirements prescribed in the individual specification section shall prevail.

The Subcontractor shall submit data, drawings, and other submittals specified. If the Contractor determines the Subcontractor's submittal to be incomplete or unacceptable, the Subcontractor shall make a complete and acceptable submittal to the Contractor by the second submission of a submittal item.

The Subcontractor shall be responsible for advising the Contractor of any submittal that may be delayed and which might, if further delayed, extend completion of the project.

Section Includes: Work includes, but is not limited to: The preparation, transmittal and delivery of documents by the Subcontractor to the Contractor as required in the "Submittals" subdivision of the specification section and as provided on the Vendor Data Schedule.

Related Sections: General Provisions, Special Conditions, Drawings and Vendor Data Schedule and other sections of these specifications apply to this section.

REFERENCES:

The following documents, including others referenced therein, form part of this Section to the extent designated herein.

AMERICAN NATIONAL STANDARDS INSTITUTE (ANSI)

ANSI Y14.1 Drawing Sheet Size and Format

SUBMITTALS:

General Procedures:

Vendor data, whether prepared by the Subcontractor or Subcontractor's subtier or supplier, shall be submitted as instruments of the Subcontractor. Therefore, prior to submittal, the subcontractor shall ascertain that material and equipment covered by the submittal and the contents of the submittal itself, meet all the requirements of the subcontract specifications, drawings, or other contract documents.

Each submittal shall contain identification for each separable and separate piece of material or equipment, and literature with respect to the information provided in the specification and on the Vendor Data Schedule. Submittals shall be numbered consecutively for each different submittal.

Vendor Data Schedule:

Vendor Data required by the specification sections to support construction and operation of the project is identified on a Vendor Data Schedule. The Vendor Data schedule is an attachment to the Specification. The Vendor Data Schedule provides a tabular listing by item number, drawing or specification reference, and description of the item or service. The type of submittal is identified by a vendor data code, which is preceded by the number of copies to be included with the submittal. Routine submittals will require 6 copies for Mandatory Approval and 4 copies for Information Only. The time required to submit the item is identified by a "When to Submit" code. An "Approval" code specifies whether the submittal is for Mandatory Approval or for Information Only. A column is included to indicate if receiving inspection is required.

Or Equal Material or Equipment Submittals:

All "or equal" materials, equipment or systems shall be identified and submitted for approval as required by the General Provisions.

An "or equal" submittal shall contain as a minimum all operating and physical parameters necessary to show that the material or equipment is equivalent to the specified material or equipment. All parameters shall be specifically identified by the submitter in the proposal. Exceptions or differences between the specified item and the "or equal" item shall also be identified.

If an "or equal" material, equipment or system is approved, the Subcontractor shall be responsible backup material necessary to include the material, equipment or system in the technical documents. In most cases this includes "red lining" a set of design drawings, and specifications to provide an "Approved for Construction" set of specifications and design drawings which incorporate the changes caused by the "or equal" item. These "red line" drawings shall be submitted prior to use of the "or equal" item. Any calculations or other backup material necessary to show that changes are adequate shall be included with the "red line" drawings and specifications.

Construction Vendor Data Transmittal and Disposition Form:

All vendor data shall be submitted to the Contractor using the Construction Vendor Data Transmittal and Disposition Form. The form provides the Subcontractor a convenient method to submit vendor data and provides the Contractor a means of dispositioning the submittal. The Subcontractor shall list the Vendor Data Schedule item number, drawing or

specification number, submittal status (e.g. Information Only, Re-submittal, or Or-equal submittal by placing the quantity enclosed in the space) and the item description. The description should include the heat or lot number for items requiring Certified Mill Test Reports.

Disposition by the Contractor

The Contractor's comments and required action by the Subcontractor will be indicated by a disposition code on the submittal. The disposition codes will be classed as follows:

(A) "Work May Proceed." Submittals so noted will generally be classed as data that appears to be satisfactory without corrections.

(B) "Work May Proceed Subject to Incorporation of Comments." This category will cover data, which, with the correction of comments noted or marked on the submittal, appear to be satisfactory and require no further review by the Contractor prior to construction. Revised drawings shall be provided upon request.

(C) "Work May NOT Proceed. Revise and Resubmit." Submittals so dispositioned will require a corrected resubmittal for one of the following reasons.

1) Submittal requires corrections, per comments, prior to final review.
2) Submittal data incomplete and requires more detailed information prior to final review.
3) Submitted data does not meet specification requirements.

(D) "Received for Information Only." Submittal so dispositioned will generally be classified as Information Only for as-specified material and equipment.

Mandatory Approval code vendor data will be reviewed by the Contractor and receive an A, B, or C disposition. Information Only submittals will receive a D disposition. A, B, and C coded dispositioned submittals will be returned to the Subcontractor. D dispositioned submittals will not be returned to the Subcontractor. The Contractor may provide internal review of Information Only submittals. In the event that comments are generated on an Information Only submittal, the submittal may be re-dispositioned B or C code and returned to the Subcontractor for appropriate action. Acknowledgment of receipt of dispositioned vendor data by the subcontractor will not be required.

The Contractor will return dispositioned submittals with reasonable promptness. Subcontractor shall note that a prompt review is dependent on timely and complete submittals in strict accordance with these instructions.

PART 2--PRODUCTS (SUBMITTAL REQUIREMENTS)

EQUIPMENT DATA:

Where specifically required by other sections, equipment data shall be provided. As applicable and except as otherwise specified, equipment data shall include the manufacturer's name and address, the model number, and specific information on performance, operating curves and data, ratings, capacities, characteristic efficiencies, catalog data, equipment dimensions, evidence of compliance with safety and performance standards, and other data required to fully describe the equipment. Data shall be submitted in sets covering complete systems or functioning units. The data shall also be identified with the tag number of the equipment or device for which the data applies.

INSPECTION AND TEST PROCEDURES:

Where specifically required by other sections, inspection and test procedures shall be provided. Inspection and test procedures shall include, as applicable: description of item or items involved, inspection or testing to be performed, a listing of testing agency and technical personnel to be used, description of equipment and facilities to be used, test prerequisites, test methods, test evaluation and acceptance criteria, safety precautions, sign-off requirements, methods for control and calibration of measuring and test equipment, proposed test record form, references to applicable portions of the subcontract documents, and detailed procedures, methods, and criteria for evaluation and acceptance. Test procedures shall be prepared in accordance with Article SC-5 "QUALITY ASSURANCE" of the Special Conditions.

INSPECTION AND TEST REPORTS:

Where specifically required by other sections, inspection and test reports shall be provided within 10 working days of such inspection or test. Inspection and test reports shall include, as applicable: identification of material or item inspected, inspection data, functional test data, date(s) and place(s) of inspection/tests, names of agencies and technicians involved, references to procedures and methods used, references to applicable portions of the subcontract documents, names of persons evaluating test results, identification of work failing to meet inspection/test acceptance criteria, and detailed description of corrective action taken.

INSTALLATION, APPLICATION, AND ERECTION INSTRUCTIONS:

Installation, application, and erection instructions shall be provided where specifically required by other sections. Installation, application, and erection instructions shall be clear, concise, and detailed, and shall utilize drawings and pictures to the extent necessary. The instructions shall include procedures for delivery acceptance, unpacking, inspection, repacking, storage, handling, preparation of supporting work, assembly, and incorporation of

the material/equipment into the work. The instructions shall include sequences, precautions, and tolerances.

In general, the Contractor's Representative will inspect the work to the criteria and instructions prescribed in the manufacturer's installation, application and erection instructions. The Subcontractor shall not deviate from the written instructions without prior written approval and direction from the manufacturer; such approval and direction shall be submitted to the Contractor as an attachment to the manufacturer's installation, application and erection instructions.

MATERIAL AND EQUIPMENT LISTS:

Where specifically required by other subdivisions, material and equipment lists shall be provided. Material and equipment lists shall be complete for the work specified under the subdivision and shall include all materials, products, equipment, and fixtures, including consumables. Lists shall include manufacturer's name and address, trade or brand name, local supplier's name and address, unit quantities and catalog numbers required to fully describe the item.

OPERATION AND MAINTENANCE (O&M) MANUALS:

Where specifically required by other sections, operation and maintenance manuals shall be provided.

Contents: O&M manuals for manufacturer's standard items shall, unless otherwise specified, be the standard publication issued for the product by the manufacturer.

PRODUCT DATA:

Where specifically required by other sections, product data shall be provided. Product data shall include descriptive material, such as catalog data, diagrams, color charts, and other data published by the manufacturer, as well as evidence of compliance with safety and performance standards. To demonstrate conformance to the specified requirements; catalog numbers alone will not be acceptable. The data shall include the name and address of the nearest service and maintenance organization that regularly stocks repair parts.

Product data submittals shall reference the applicable subdivision and drawings, and be complete for each item or unit of work.

SHOP DRAWINGS:

Where specifically required by other sections, shop drawings shall be provided. Each shop drawing submittal shall be complete and shall be accompanied by technical and performance data as necessary to fully illustrate the information in the shop drawings, or cross referenced

to such data contained in previous submittals. Unless otherwise specified, submittals shall consist of black-line printed copies. Hard copies and an electronic copy shall be submitted where required by other specification sections. Electronic copies of CAD generated drawings shall be provided in a form which will transfer to the Contractor's software using IGES or a custom software provided by the Subcontractor. Sepia type prints are not acceptable. One set of copies will be returned to the Subcontractor marked to show the required corrections or approval.

All equipment or other devices shall be identified on the shop drawings by the tag number indicated on the design drawings. The Subcontractor shall identify all equipment and devices with tags or labels in accordance with the requirements specified in the respective subdivision.

The following additional submittals shall be required as indicated on the Vendor Data Schedule:

Redline Drawings: Copies of the shop drawings shall be updated to include all changes or modifications made during construction and to reflect the actual conditions of construction. Each drawing shall be marked "As-Built" and be signed by the Subcontractor representative and shall be suitable for XEROX copying or microfilming.

Title Block and Identification: On each shop drawing, a 1-1/2 x 2-1/2 in. space shall be provided for the Contractor's review status stamp. Each shop drawing shall include a title block showing:

Project name and location.

Name and address of Subcontractor or manufacturer as applicable.

Date, scale of drawings, unique drawing identification number, and referenced design drawing number.

Subcontractor's review and approval stamp or signatures.

Revision record including signatures and dates.

Preparation and Size: Details and information shall be clearly drawn, dimensioned (including tolerances), noted, cross referenced and shall be of such quality as to ensure legible B (11 x 17 in.) size photocopy reproductions from microfilm (by others). Drafting and drawing standards shall be consistent with the practices established by ANSI or other acceptable standards and as specified herein:

Where applicable, views shall be oriented so that plant north faces to the left or up.

Use of abbreviations shall be avoided where space permits spelling in full; if used, abbreviations shall be described in a legend on the drawing.

Types: Shop drawing shall be of the specific types specified in the respective subdivisions. If a specific type is not specified, drawing shall be the type most commonly required for the specific class of work subject to the Contractor's approval. The most commonly required types of shop drawings and drawing content (as applicable) are described hereinafter.

Layout Drawings: Shall be consolidated for all trades in the subcontract, and show to scale pertinent structural and fenestration features and other items, such as cabinets, required for installation and which could affect the available space. Mechanical and electrical equipment and accessories shall be shown to scale in plan, elevation and/or section, in their installed positions. Duct work, plumbing, and piping shall also be indicated. Submittals describing the various mechanical and electrical equipment items, which are to be installed in areas represented by layout drawings, shall be assembled and submitted concurrently with and accompanied by the room layout drawings.

Wiring Diagrams: Shall identify all terminals, terminal blocks, and wires with wire numbers and colors. All wires within enclosures and all wiring connections to externally located equipment and devices shall be shown. For simple installations, wiring diagrams and control diagrams may be combined onto a common drawing.

SPARE PARTS LISTS:

Where specifically required by other sections, spare parts lists shall be provided. Spare parts lists shall include all spare parts and the current list price of each spare part. The spare parts lists shall also identify those spare parts, which each manufacturer recommends for maintenance at the site. Each manufacturer or vendor shall indicate the name, address, and telephone number of its spare parts source closest to the INEEL.

The Subcontractor shall cross-reference all spare parts lists to the equipment tag numbers designated in the specifications or on the drawings. If O&M manuals are specified for equipment, spare parts lists shall be submitted as part of the O&M manual.

CALCULATIONS:

Where specifically required by other sections, calculations shall be provided. Engineering calculations and analyses shall be fully checked by a qualified individual other than the originator, and shall be signed and dated as checked. All final submittals of calculations shall be bound and shall include the title and purpose of the calculation, a table of contents or index, complete list of references, design basis and complete list of assumption (if any), methodology, and sufficient information to allow independent verification of the calculation.

Calculations which are performed by computer or with computer assistance shall include a description of the hardware and software used, a description of the model employed if applicable, verification documentation for the computer program, and a copy of the computer input and output. All revisions to submitted calculations, as a result of comments by the Contractor or design changes by the Subcontractor, however minor, shall be resubmitted.

SPECIAL PACKAGING, HANDLING, OR STORAGE PROCEDURES:

Where specifically required by other sections, special packaging, handling, rigging, shipping, storage, or preservation procedures shall be provided. These procedures shall contain the following minimum requirements as applicable:

Measures taken to prevent damage during transit.

Detailed description of container design.

Overall dimensions and approximate weight of container and contents.

Recommended method for off-loading.

List of required special off-loading devices.

Special instruction for proper packaging and preventative maintenance during storage at the site.

Special instructions for marking.

Safety code labels, if applicable.

PART 3--EXECUTION (NOT APPLICABLE)

END OF SECTION 01300

SECTION 02062--DEMOLITION AND REPAIRS

PART 1--GENERAL

SUMMARY:

Section Includes: Work includes, but is not limited to:

Demolition as shown on the drawings

Saw cutting and removal of asphalt paving

Salvage of identified items and materials

Removal of existing CMP culverts, concrete headwalls, and catch basins

Removal of resulting rubbish and debris

SUBMITTALS:

No submittals required.

PROJECT/SITE CONDITIONS:

Condition of Structures or Facilities: Conditions existing at the time of inspection for bidding purposes will be maintained insofar as practicable. Actual conditions may vary slightly due to operations, which may occur prior to start of demolition work.

Protection: Ensure safe passage of persons in the vicinity of the demolition area. Conduct operations to prevent injury to adjacent buildings, structures, other facilities and persons. Provide and erect any necessary temporary enclosures, barricades, walkways, shoring, bracing, etc., to ensure that safe conditions will exist.

Dust Control: The amount of dust resulting from demolition shall be controlled to prevent the spread of dust to occupied portions of the construction site and to avoid creation of a nuisance in the surrounding area. Use of water will not be permitted when it will result in, or create, hazardous or objectionable conditions such as ice, flooding and pollution.

Burning: The use of burning at the project site for the disposal of refuse and debris will not be permitted.

Use of Explosives: Use of explosives will not be permitted.

PART 2--PRODUCTS

MATERIALS:

Disposition of Removed Equipment and Materials: The Government will retain title to all equipment and materials removed by the work. Items which are to be reused under this Subcontract shall be removed and stored as indicated below. Materials designated as scrap shall be promptly disposed of as directed by the Special Conditions. Surplus material shall be disposed of as directed in the Special Conditions (SC-16).

PART 3--EXECUTION

GENERAL:

All demolition and repair work shall be done in a neat and orderly manner without any damage to existing facilities not directly involved under this Subcontract. The Subcontractor shall be responsible for all damage to existing buildings or facilities caused by his operations under this Subcontract.

POLLUTION CONTROLS: Use temporary enclosures and other suitable methods to limit dust, spread of contamination, or spread of hazardous materials beyond the work area.

EXISTING STRUCTURES:

General: Existing structures shall be removed as indicated on the drawings.

Miscellaneous: All areas disturbed or demolished shall be patched and/or painted to match existing adjacent areas.

CLEAN UP:

Debris and rubbish shall be removed from the demolition areas. Debris shall be removed and transported in a manner that prevents spillage on streets or adjacent areas. Hauling and disposal shall comply with the Special Conditions (SC-16).

FIELD QUALITY CONTROL:

Surveillance will be performed by Contractor's Representative to verify compliance of the work to the drawings and specifications.

END OF SECTION 02062

SECTION 02200--EARTHWORK

PART 1--GENERAL

SUMMARY:

Section Includes: Work includes, but is not limited to:

Clearing and grubbing as required.

Excavating all materials encountered, of every description, for completion of the Subcontract as shown on the drawings and as specified herein. Work includes trenching, excavating for concrete ditches, lift station, culverts, evaporation basin, headwalls, manholes, fence posts, and guard posts.

Backfilling of all excavations for piping, concrete ditches, catch basins, lift stations, etc.

Surface water and erosion control measures.

Installing a locator ribbon above utilities installed under this Subcontract.

Compacting all backfill as specified herein.

Finish grading and grading for surface drainage.

REFERENCES:

The following documents, including others referenced therein, form part of this Section to the extent designated herein.

AMERICAN ASSOCIATION OF STATE HIGHWAY TRANSPORTATION OFFICIALS (AASHTO)

	Standard Specifications for Transportation Materials and Methods of Sampling and Testing
AASHTO M145	Recommended Practice for the Classification of Soils and Soil-Aggregate Mixtures for Highway Construction Purposes
AASHTO T11	Standard Method of Test for Materials Finer Than 75 Micrometer (No. 200) Sieve in Mineral Aggregates by Washing
AASHTO T27	Standard Method of Test for Sieve Analysis of Fine and Coarse Aggregates
AASHTO T99	Standard Method of Test for the Moisture-Density Relations of Soils Using a 5.5-lb (2.6-kg) Rammer and a 12 in. (305 mm) Drop

AASHTO T238 Standard Method of Test for Density of Soil and Soil-Aggregate in Place by Nuclear Methods (Shallow Depth)

CODE OF FEDERAL REGULATIONS

29 CFR 1926 OSHA General Industry Safety Standards, Subpart P

IDAHO TRANSPORTATION DEPARTMENT (ITD)

SSHC Standard Specification for Highway Construction, 1999

SUBMITTALS:

Submittals include, but are not limited to the following:

No Vendor Data required for this section unless an "or-equal" item is proposed.

See Section 01300, Submittals and the Vendor Data Schedule for additional submittal requirements.

PART 2--PRODUCTS

MATERIALS:

Satisfactory Soil Materials: Satisfactory soil materials are defined as those complying with AASHTO M145, soil classification Groups A-1, A-2-4, A-2-5, and A-3.

Unsatisfactory Soil Materials: Unsatisfactory soil materials are those defined in AASHTO M145 soil classification Groups A-2-6, A-2-7, A-4, A-5, A-6, and A-7; also peat and other highly organic soils.

Backfill and Fill Material: Excavated material shall be used as fill material. "Satisfactory" soil materials free of clay, rock, gravel larger than 3 in. in any dimension, debris, waste, frozen materials, vegetable and other deleterious matter. If required, select pit run gravel is available at the CFA and TRA gravel pits. Gravel pit material and use of the gravel pits shall be at no cost to the Subcontractor. Upon completion of operations involving fill material removal, the Subcontractor shall grade and reshape the disturbed areas. Sloped surfaces shall meet the requirements of OSHA 29 CFR 1926.

Base Course Material: Naturally or artificially graded mixture of 3/4 in. maximum size crushed gravel, crushed stone, natural and crushed sand. Material shall meet the requirements of ITD subsection 703.04.

Buried Pipe Locator Ribbon: Ribbon shall be 3 in. wide and shall be red for all electrical conduits, electrical cables, and telephone cables. Yellow ribbon shall be used for all buried pipelines. Orange ribbon shall be used on cathodic protection. Ribbon shall be tape manufactured by Reef Industries or Allen Markline or equal and shall have metal foil which is completely encased in plastic so as to be unaffected by cathodic protection systems and can be easily detected by metal detectors. The ribbon shall be printed with the manufacturer's standard wording, "CAUTION ELECTRIC LINE BURIED BELOW," for all electrical conduits, phone lines, etc., "CAUTION BURIED PIPELINE BELOW," for all buried pipelines, and "CAUTION CATHODIC PROTECTION," for all buried cathodic protection systems.

PART 3--EXECUTION

EXCAVATION:

Clearing and Grubbing: All areas to be occupied by the evaporation pond, berms and other similar structures plus 10 ft outside these areas and 1 ft outside sidewalk areas and pipe trenches, shall be stripped and cleared of all brush, weeds, rubbish and organic matter. All vegetable matter, roots, brush and debris encountered during the stripping operations shall be removed from the cleared areas to a depth of at least 8-in. below the subgrade. Resulting depressions shall be completely backfilled and compacted in accordance with the applicable part of these specifications except in those cleared areas where further excavation is required. Stripped material shall be stockpiled as specified hereinafter and on the drawings.

Grading Surface Materials: The area to be occupied by the polyurea spray-on coating (see Drawing C-25), including the tank farm area, shall be re-graded and shaped to provide a minimum of 0.50% slope towards the concrete lined ditches. Low spots shall be filled with excess excavated material and compacted. The resulting graded and shaped area shall be compacted to 90% optimum density. In the tank farm area, hand work may be required around existing structures. See attached Management Control Procedure MCP-P7.5 and drawing 097726 for tank farm area load restriction requirements.

Earth Excavation: Earth excavation includes removal and disposal of pavements and other obstructions visible on ground surface, underground structures and utilities indicated to be demolished and removed, soil material of any classification, and other materials encountered that are not classified as rock excavation or unauthorized excavation.

Hand Excavation: Any excavation within 5 feet horizontally or 2 feet vertically of marked underground energized or pressurized cables or piping not present in a concrete ductbank shall be done by hand.

Rock Excavation: No rock excavation is required.

Unauthorized Excavation: Unauthorized excavation consists of removal of materials beyond indicated elevations or dimensions without specific direction by the Contractor. Unauthorized excavation, as well as remedial work directed by the Contractor, shall be at the Subcontractor's expense.

Structural: Excavations for such structures as footings, headwalls, endwalls and slabs shall be made to the depths shown on the drawings and of sufficient width to allow adequate room for setting and removing forms, installing accessories and inspection. Where concrete foundations or slabs are to be constructed on material other than rock, care shall be taken to prevent disturbing the bottom of the excavation. Excavation to final grade shall not be made until just before concrete forms are to be placed therein. Concrete foundations shall be placed only on undisturbed soil or rock.

Trenches: Trenches shall be of sufficient width to provide adequate room for workmen to perform any necessary service to the materials or items being installed therein and to permit proper compaction of the backfill.

Grade: The bottom of pipe trenches shall be graded to allow for a minimum of 4 in. of compacted sand bedding beneath the pipe. Bell holes shall be shaped so that pipe will be uniformly supported for its entire length on the compacted sand backfill. Hubs or flanges shall be unsupported until the pipeline has been tested, coated, and wrapped, as required.

Stockpiling and Disposal: Excavated material that is suitable and required for backfilling, or grading, shall be piled in an orderly manner a sufficient distance from the edge of the excavation, but in no case closer than 2 ft, and so located that it will not interfere with normal vehicular or pedestrian traffic. Excavated materials to be used for backfill shall be kept free from vegetation and other objectionable materials. Excavated materials not required or not approved for backfilling, grading or topsoil, shall be stockpiled. Topsoil cleared for the construction of the evaporation pond shall be stockpiled on-site for use in the outer berm construction to promote re-vegetation. Topsoil stockpiles shall be covered with 8-mil Visqueen, or similar approved material, to prevent erosion. Unused excavated earth and combustible materials shall be hauled to areas designated by the Contractor and disposed of in a manner specified in the Special Conditions.

Unstable Soils: If wet or otherwise unsatisfactory soil is encountered in an excavation, at or below the excavation line, it shall be brought to the attention of the Contractor and removed as directed in accordance with Article 38, "Differing Site Conditions", of the General Provisions. The bottom of the excavation shall then be brought to the required grade with concrete or compacted backfill as specified hereinafter. Excavation of unstable soil resulting from the Subcontractor's neglect to keep the excavated opening dry, and other over depth excavation not required to satisfactorily complete the work, shall be brought up to the required grade with concrete or compacted backfill as specified hereinafter at the Subcontractor's expense.

Shoring and Bracing: The sides of all excavations shall be sloped or securely shored and braced in accordance with OSHA 29 CFR 1926, Subpart P.

Control of Water: All excavations shall be kept free of standing water. The Subcontractor shall furnish, install and operate the equipment required to keep excavations free from water at all times. Water shall be disposed of in a manner that will not cause injury to property.

BACKFILL OR FILL:

General: The excavations shall be cleared of all trash and debris prior to backfilling or filling. All backfill or fill material shall be free from trash, organic matter and frozen particles. Backfilling or filling shall be done only when approved by the Contractor. In excavations that are shored, shoring and formwork shall be removed or raised as backfill or fill is placed.

Under Headwalls, Slabs or Pavement: Backfill or fill materials under concrete slabs, floors, sidewalks, and concrete or asphalt pavement including fill for manholes shall be compacted fill material as specified in the "Materials" section, except that the last 2 in. of such fill shall be compacted leveling course material.

Pipelines: Bedding for piping and buried tanks shall be compacted sand or other approved granular material unless otherwise shown on the drawings. Bedding material shall extend from a minimum of 4 in. beneath the pipe to a minimum cover of 4 in. The remainder of the trench or excavation shall be backfilled as specified hereinafter.

Overdepth Pipeline Excavation: Where pipe trenches are excavated to an overdepth due to the presence of rock, unstable soil or other unsuitable material, the overdepth shall be backfilled to required grade with compacted sand or other approved granular material.

Placement: Concentrated dumping of backfill or fill material into excavations will not be permitted. No water shall be used for placing, settling or compacting backfill or fill except to obtain optimum moisture content. All material must be placed in uniform layers not to exceed 8 in. loose measurement and brought up simultaneously and evenly on both sides of foundation walls and around underground or covered structures and equipment such as culverts, manholes, storage tanks and pipe. Backfill or fill around piping, and at least 4 in. over, shall be hand placed and compacted prior to pressure testing. Pipe joints shall be left exposed until leak testing has been completed. Care shall be taken when backfilling, filling, or compacting around any buried items or dampproofed walls to prevent injury to the item being covered and to prevent piercing or rupturing the insulation, coating or dampproofing membrane. Loose backfill or fill may be placed as specified hereinafter.

Compaction: Unless otherwise indicated on the drawings or specifications, compact all backfill and fill material under slabs, roads, sidewalks, and other surfaced areas, around foundation walls, culverts, underground tanks and other similar structures and to at least 4 in.

compacted depth above all piping in trenches. Unless otherwise indicated, all "compacted" backfill or fill shall be compacted to at least 95% of maximum density at optimum moisture content as determined by AASHTO T99. Each 8-in., maximum, loose measurement lift shall be compacted before the next lift is placed thereon. Compacted backfill or fill density and moisture content may be measured by the Contractor at any location and depth. Sections of backfill or fill failing to meet the minimum compaction requirements shall be corrected prior to placement of subsequent lifts. No heavy equipment shall be allowed within 5 ft of a structure or the foundation of any structure. No heavy equipment shall be allowed over piping until a minimum of 24 in. of backfill has been compacted over the piping.

Locator Ribbon: The locator ribbon shall be placed in a zone 6 to 12 in. from the ground surface directly over the utility during the backfill and compaction operation.

FIELD QUALITY CONTROL:

Surveillance will be performed by the Contractor's Representative to verify compliance of the work to the drawings and specifications.

END OF SECTION 02200

SECTION 02430--CULVERTS AND TRENCH DRAINS

PART 1--GENERAL

SUMMARY:

Work shall include furnishing and installing new culverts, trench drains and appurtenances in accordance with these specifications and the subcontract drawings.

Section Includes: Work includes, but is not limited to:

Furnish and install CMP culverts, trench drains, and appurtenances.

REFERENCES:

The following documents, including others referenced therein, form a part of this Section to the extent designated herein:

AMERICAN SOCIETY FOR TESTING AND MATERIALS (ASTM)

ASTM A 798 Standard Practice for Installing Factory-Made Corrugated Steel Pipe for Sewers and Other Applications

SUBMITTALS:

Product Data: Submit product data for trench drains, which includes installation instructions.

Submit pipe certification for culverts.

See Section 01300, Submittals and Vendor Data Schedule for additional submittal requirements.

QUALITY CONTROL:

Regulatory Requirements (Codes and Standards): Comply with the following codes and standards, unless otherwise specified herein:

ASTM A 798 Standard Practice for Installing Factory-Made Corrugated Steel Pipe for Sewers and Other Applications

PART 2--PRODUCTS

MATERIALS:

Culverts: The culverts shall be 16-gage minimum or 14-gage where specified galvanized or aluminized corrugated steel pipe with standard o-ring or gasketed connection bands at all joints.

Trench Drains: The surface drainage system shall be ACO Drain FG200 channel slope by ACO Polymer Products, Inc. or approved equal. The system shall be 8" nominal width and manufactured with a continuous 1.0-% slope.

The channel, frame and grating combination shall withstand an AASTO H-20 loading. Grating shall be cast or ductile iron and the grate shall be locked securely to the frame.

Channel sections shall be joined together with a lap joint not less than 2" and be designed to minimize disturbance to flow. All joints shall be sealed during installation with a material suitable for storm-drain use.

The pre-sloped system shall be manufactured in modular lengths of not less than 6 feet. The use of neutral sections (no slope) may be used, at a minimum, to extend the system to the required length.

PART 3--EXECUTION

INSTALLATION:

Location: Install culverts to lines and grades shown on the drawings.

Earthwork: Excavation, backfilling and grading shall be performed in accordance with Section 02200 Earthwork. Bedding for corrugated metal pipe shall be in accordance with ASTM A 798 standard practice for installing factory-made corrugated steel pipe for sewers and other applications. A minimum of 8" cover shall be provided over culverts.

The subgrade for trench drain installation shall be uniform as per the plan drawings. Abrupt changes in elevation grade of the prepared surface is to be avoided. The surface shall be compacted in accordance with Division 2, Section 2 "Earthwork" and sloped to comply with the manufacturer's recommendation.

Installation of the fiberglass trench system shall be in strict accordance with the manufacturer's recommendation.

Laying Corrugated Metal Pipe: The outside laps of circumferential joints shall point upstream and longitudinal laps shall be at the sides. The lugs on the coupling bands of metal

pipe shall be placed to one side of the top of the center line of the pipe so that they will not extend above the top of the pipe.

The space between the pipe and the connecting band shall be kept free from dirt so that corrugations fit snugly. The connecting band, while being tightened, shall be tapped with a soft-head mallet to take up slack and insure a tight joint.

Pipe and Trench Drain Testing: Hydrostatic pressure testing will not be required.

FIELD QUALITY CONTROL:

Surveillance will be performed by Contractor's Representative to verify compliance of the work to the drawings and specifications.

END OF SECTION 02430

SECTION 02444--CHAIN LINK FENCING

PART 1--GENERAL

SUMMARY:

The Subcontractor shall provide all labor, material, and equipment to construct the fence in accordance with the drawings and these specifications.

Section Includes: Work includes, but is not limited to:

Furnish and install the fencing as shown on the drawings, including gates and all hardware, complete and ready to use.

Related Sections:

Section 03300 Cast In Place Concrete

REFERENCES:

The following documents, including others referenced herein, form part of this Section to the extent designated herein.

AMERICAN SOCIETY FOR TESTING AND MATERIALS (ASTM)

ASTM A 90	Standard Test Method for Weight (Mass) of Coating on Iron and Steel Articles With Zinc or Zinc-Alloy Coatings
ASTM A 153	Standard Specification for Zinc Coating (Hot Dip) on Iron and Steel Hardware
ASTM A 392	Standard Specification for Zinc-Coated Steel Chain-Link Fence Fabric
ASTM F 669	Standard Specification for Strength Requirements of Metal Posts and Rails for Industrial Chain Link Fence
ASTM F 1083	Standard Specification for Pipe, Steel, Hot-Dipped Zinc-Coated (Galvanized) Welded, for Fence Structures

SUBMITTALS:

Product Data: Submit product data including installation instructions and verification that the product complies with these specifications.

See Section 01300, Submittals and Vendor Data Schedule for additional submittal requirements.

PART 2--PRODUCTS

MATERIALS:

Posts, Rails, and Braces: All posts, rails, braces and appurtenances shall be hot-dipped zinc coated per ASTM A 123, or A 153, whichever is applicable. Line posts shall be 2.38 in. O.D. x 3.65 lb/ft. Corner, gate and pull posts shall be 4.5 in. O.D. x 10.79 lb/ft. Bracing shall be 1.66 in. O.D. x 2.27 lb/ft unless otherwise indicated on the drawings. Gate posts and corner posts shall be filled with concrete prior to capping.

Chain Link Fabric: Metal fence fabric shall be No. 9 gage wire woven into a 2-in. mesh. Fabric finish shall be hot-dipped zinc galvanized per ASTM A 392. Finish shall provide not less than 1.0 oz. of zinc per sq. ft of fabric when tested in accordance with ASTM A 90.

Hardware and Accessories: All hardware and accessories shall be galvanized to comply with ASTM A 153, Table I. Double leaf gates shall have fork type latch with center drop rod with a positive locking gravity device, arranged to engage the gate stop as shown on the drawings.

Wire Ties: Use 9 gage minimum aluminum wires for tying chain link fabric to rails, posts and braces.

Tension Wire: Tension wire shall be 7 gage, coated coil spring wire with metal and finish matching that of new fabric. Locate at bottom of chain link fabric on new fence.

Swing Gate: The swing gate shall be a double leaf swinging gate with capacity to open to 180 degrees of the fence both ways. Gate posts and frame shall be of galvanized pipe as shown on the drawings.

Grounding Material: Grounding material shall conform to the requirements given on the drawings.

Concrete:

Concrete for fence posts shall be Class 30 (3000 psi).

The manufacture and delivery of concrete shall conform to *Division 3* Section, 03301 "Concrete Work". No test cylinders shall be required for fencing work.

PART 3--EXECUTION

INSTALLATION/ERECTION:

General: Place concrete around posts in a continuous pour, tamp for consolidation. Verify that each post is plumb and at the proper elevation and alignment. Set keepers, stops, sleeves and any other accessories into concrete as required.

Rock drilling will not be required for the placement of the posts. If required, it shall be brought to the attention of the Contractor's Representative.

Top Rails: Run rail continuously through post caps. Provide expansion couplings as recommended by fencing manufacturer.

Center Rails: Install in one piece between posts and flush with post on fabric side, using special offset fittings where necessary.

Brace Assemblies: Install braces so posts are plumb when diagonal rod is under proper tension.

Steel Fabric: Pull fabric taut and tie to posts, rails, and tension wires. Install fabric on sides of posts exterior to the enclosed area and anchor to framework so that fabric remains in tension after pulling force is released.

Stretcher Bars: Thread through or clamp to fabric every 4 in., and secure to posts with metal bands spaced 16 in. o.c.

Tie Wires: Use U-shaped wire, conforming to diameter of pipe to which attached, clasping pipe and fabric firmly with ends twisted at least 2 full turns. Bend wire to minimize hazard to persons or clothing.

Tension Wire: Install tension wire on new fence before stretching fabric and tie to each post with not less than 9 gage galvanized wire. Fasten fabric to tension wire using 11 gage galvanized steel hog rings spaced 24 in. o.c. Install tension wire with chain link fabric only. Do not use with plastic fence fabric.

Fasteners: Install nuts for tension bands and hardware bolts on side of fence opposite fabric side.

Gates: Install gates plumb, level, and secure for full opening without interference. Install ground-set items in concrete for anchorage, as recommended by fence manufacturer. Adjust hardware for smooth operation and lubricate where necessary. Hinges shall be installed to prevent removal by lifting off.

FIELD QUALITY CONTROL:

Surveillance will be performed by the Contractor's Representative to verify compliance of the work to the drawings and specifications.

END OF SECTION 02444

SECTION 02486--REVEGETATION

PART 1--GENERAL

SUMMARY:

This work shall consist of seedbed preparation, sowing of grasses, and application of fertilizer.

Section Includes: Work includes, but is not limited to:

Prepare seed bed, furnish and sow seed, and furnish and apply fertilizer.

Related Work:

Section 02200 – Earthwork

REFERENCES:

None.

SUBMITTALS:

No Vendor Data required for this section unless an "or-equal" item is proposed.

PART 2--PRODUCTS

The Subcontractor shall furnish the materials and equipment necessary to revegetate disturbed sites.

MATERIALS:

Grass Mix: The following grass mix shall be used in disturbed area surrounding the evaporation pond, outer berm slopes, and "V" shaped ditch for the spillway.

Grass Mix

SPECIES	RATE OF APPLICATION (POUNDS PER ACRE PURE LIVE SEED)
P-27 Siberian Wheatgrass	4
"Ephraim" Crested Wheatgrass	5
"Sodar" Streambank Wheatgrass	9
Total	18

Seed Mix Sources:

Approved dealers for the seed mixes are:

Granite Seeds (801) 768-4422
Grimm Growers (208) 785-0830
Wind River Seed (307) 568-3361
Maple Leaf (800) 287-3162

Fertilizer: Fertilizer shall be 19-48-0 (NPK) ammonium or diammonium phosphate. Each component of the fertilizer may vary two percent.

Mulch: Mulch shall be processed grass straw.

EQUIPMENT:

Seedbed Preparation: Replace stockpiled material over disturbed areas to be used as a seedbed. Refer to Section 02200 – Earthwork. Use disks, harrows, roller harrow-packers (culti-packers), tooth type harrows, shovels, or other similar equipment as required to prepare the seedbed.

Seeding and Fertilizing: Use equipment such as drills with double disc agitator, ground driller hand seeders, or culti-packers with seed boxes to apply seeding and fertilizer. Do not use dry broadcast seeders or hydroseeders.

PART 3--EXECUTION

Season of Work: Seeding shall be done between September 1 and December 15.

Seedbed Preparation: The stockpiled soil from excavation shall be uniformly distributed over the trenches and the side slopes of the berms. Soil shall be tilled a minimum depth of 3-inches. The seedbed shall be firm below the seeding depth and well pulverized and loose on top. It shall be free of clods and weeds. Seedbed preparation shall not be performed when soil conditions are not suitable for tilling: too dry, too wet, frozen, etc. Tillage shall produce cross-slope furrows on slopes.

On areas subject to severe erosion, the extent of seedbed preparation shall not exceed that which can be seeded in one day.

Fertilizing: Fertilizing shall closely follow seedbed preparation. Fertilizer shall not be mixed with seed. Fertilizer may be drilled or broadcast. Fertilizer shall be applied at a rate of 50 pounds per acre.

Seeding: Seeding shall closely follow fertilizing. If the seedbed has been disturbed, then the Subcontractor shall prepare the seedbed again. Seeds shall be thoroughly mixed prior to application. Seeds shall be uniformly applied at the previously specified rate. Seeds shall be buried 0.25 to 0.75 inches. Seeding shall not be performed when weather conditions are unfavorable: high wind, heavy rain, etc.

Drill seeding shall be performed in areas with slopes of 3:1 or flatter and where there is not excessive rock and gravel. Other areas shall be seeded by broadcasting.

Drilling shall maintain cross-slope furrows on slopes.

Mulching: Mulch shall be spread uniformly at a rate of 1 ton per acre. Mulch shall be anchored into the soil to a depth of at least 2-in., and with no more than one pass of the equipment. Mulching shall not be performed when wind interferes with mulch placement.

Protection: Traffic over seeded area shall be prohibited.

Clearing and Grubbing: Vegetation from the clearing and grubbing shall be placed over the seeded areas. Care shall be taken to avoid disturbing the seedbeds.

FIELD QUALITY CONTROL:

Surveillance will be performed by the Contractor's Representative to verify compliance of the work to the drawings and specifications.

END OF SECTION 02486

SECTION 02514--ASPHALT CONCRETE PATCHING

PART 1--GENERAL

SUMMARY:

Provide all work, operations and material required to construct asphalt concrete patching in accordance with the project drawings and these specifications.

Section Includes: Work includes, but is not limited to:

Patching areas disturbed by excavation/trenching through paved areas.

Paving areas as designated on the design drawings.

Furnish and apply tack coat where applicable.

Haul, place and compact asphalt concrete mix.

REFERENCES:

The following documents, including others referenced therein, form a part of this Section to the extent designated herein.

AMERICAN ASSOCIATION OF STATE HIGHWAY TRANSPORTATION OFFICIALS (AASHTO)

AASHTO	Standard Specifications for Transportation Materials and Methods of Sampling and Testing
AASHTO M226	Viscosity Graded Asphalt Cement

AMERICAN SOCIETY FOR TESTING AND MATERIALS (ASTM)

ASTM D 946	Standard Specification for Penetration Graded Asphalt Cement for use in Pavement Construction

IDAHO TRANSPORTATION DEPARTMENT (ITD)

ITD SSHC	Standard Specifications for Highway Construction, 1999
ITD	Field Test Manual, Part I, Sampling and Test Methods

SUBMITTALS:

Submittals include, but are not limited to the following:

The Subcontractor shall submit the mix design data sheets.

QUALITY CONTROL:

Regulatory Requirements: (Codes and Standards): Comply with provisions of the following codes and standards, unless otherwise specified herein. Idaho State Specifications are available for inspection at offices of the Division of Highways, State of Idaho, the Department of Energy (DOE), Idaho Operations Office Headquarters, and Facilities Design at the Engineering Research Office Building (EROB).

AASHTO M226
ASTM D 946
ITD SSHC

PART 2--PRODUCTS

Asphalt: The asphalt cement shall be Viscosity Grade AC-5. Products shall meet applicable requirements of Section 702 of the SSHC, AASHTO M226/Table 1, and ASTM D 946.

Tack Coat: The tack coat shall be an emulsified asphalt, SS-1 or SS-1h, meeting the applicable requirements of Section 702 (SSHC).

Crushed Gravel for Aggregate: The master gradation for aggregate for the asphalt concrete shall be as follows unless modified in writing:

Sieve	**Percent Passing**
3/4	100
1/2	95-100
3	75-90
No. 4	50-75
No. 8	35-60
No. 30	15-35
No. 50	10-25
No. 200	4-8

PART 3--EXECUTION
QUALITY CONTROL TESTING:

Contractor Supplied Testing: The following tests may be performed by the Contractor's Representative.

Idaho T-125 (Nuclear Densimeter) for asphalt concrete in-place density.

Idaho T-87 for surface smoothness of finished pavement.

Composition of Mixture: The asphalt concrete shall be composed of a mixture of aggregate, filler if required, and asphalt. The mix design shall be tested by an independent test laboratory based on the aggregate gradation before mentioned, and shall meet one of the following criteria:

Marshall Method:

Stability:	500-lb minimum
Flow:	8 to 20
Air Voids:	3% to 5%

HVEEM Method:

Stability:	37 minimum (See 405.04 of SSHC)
Swell:	Less than 0.030 in.
Air Voids:	3% to 5%

Mix design test results shall be submitted for approval, and the approved design mix shall be in effect unless modified in writing by the Contractor.

The aggregate and asphalt shall be mixed in accordance with SSHC Section 405.11.

BASE CONSTRUCTION:

The placement and compaction of the base leveling course material shall be in accordance with Division 2 Section, "Earthwork".

SURFACE PREPARATION:

The Subcontractor shall saw cut the existing asphalt pavement back 6 to 10 inches from the edge of excavation in a neat, vertical straight line. Any fractured, heaved, undermined or otherwise damaged asphalt beyond the 6 to 10 inch offset cut shall be "squared out" as directed by the Contractor's Representative and repaved.

TACK COAT:

Immediately prior to replacing any asphalt surfacing, the Subcontractor shall paint all edges of the old mat with an asphalt tack coat. Distribute at rate of 0.10 gal per sq. yd of surface.

PLACING AND FINISHING ASPHALT CONCRETE:

General: The asphalt plant mix shall then be spread uniformly and without segregation across the entire width of the area where the surfacing has been removed and where the patch is required. It shall be spread to such a depth that when compacted to its maximum density, the patched surface will match the existing surface. The asphalt concrete shall be compacted to 95% standard density.

Surface Smoothness: The Subcontractor shall "rake" all edges to ensure the availability of a sufficient number of fines to seal the joints.

FIELD QUALITY CONTROL:

Surveillance will be performed by Contractor's Representative to verify compliance of the work to the drawings and specifications.

END OF SECTION 02514

SECTION 02598--POND LINER

PART 1--GENERAL

SUMMARY:

The Subcontractor shall supply all labor and materials required to provide a non-woven geotextile, high density polyethylene (HDPE) drainage net (geonet) and HDPE geomembrane liners for the evaporation pond complete and in accordance with the drawings and specifications.

Section Includes: Work includes, but is not limited to:

Furnish and install pond liners as shown on the drawings and this specification.

Furnish and install pond drainage net as shown on the drawings and this specification.

Furnish and install non-woven geotextile as shown on the drawings and this specification.

REFERENCES:

The following documents, including others referenced therein, form part of this Section to the extent designated herein:

AMERICAN SOCIETY FOR TESTING AND MATERIALS (ASTM)

SUBMITTALS:

Submittals include but are not limited to the following:

Quality Control Plan: Submit a quality control plan for fabrication and installation for approval. Specific details shall be shown where sealing around pipe penetrations and other structures.

Installation and Shop Drawings: Submit drawings and product data showing proposed panel layout including field seams, details, balast and safety ladders.

Certification: Submit certification that the material supplied meets the Materials requirements.

As-Built Drawings: Submit as-built redline drawings showing actual geomembrane panel placement and seams including typical anchor trench details.

Test Reports: Submit test procedures and reports for liner fabrication and seam inspection.

Qualifications: Submit certification of personnel performing fabrication and installation of the fabric. Submit the names of the projects and references, which document the subcontractor's qualifications.

Warranty: Submit pond liner warranty.

See Section 01300, Submittals and Vendor Data Schedule for additional submittal requirements.

QUALITY CONTROL:

The installation Subcontractor shall be approved by the manufacturer of the liner materials. A representative of the company furnishing the liners shall be present during the entire installation procedure and shall provide technical assistance for the installation of the lining.

The Subcontractor shall be an established firm regularly engaged in manufacturing and installing liner systems for the past 5 years installing a minimum of 5,000,000 square feet of HDPE lining.

The Subcontractor shall provide documentation of an approved Subcontractor Quality Control Plan for the fabrication and installation of the flexible membrane liners.

Documentation shall be submitted with the liner certifying compliance with the Materials section of this specification.

DELIVERY, STORAGE AND HANDLING:

Delivery, storage and handling of the materials shall conform to the manufacturer's recommendations and shall be done in such a manner as to prevent damage to any part of the work.

PROJECT/SITE CONDITIONS:

The purpose of this work is to install a double lined containment system with leak detection for a new earth pond to contain stormwater runoff for a duration of 20 years.

The maximum depth of the liquid in this open-air pond will be approximately 15-ft. Liquid levels will vary due to evaporation and variations in flow. There will be times when the pond will be empty.

The temperature of the contained liquid will vary with the ambient temperature.

Refer to subcontract drawings for dimensions of the pond.

The pond is located at the Idaho National Engineering and Environmental Laboratory in southeast Idaho. The mean temperature at this location is 42° F, with a summer high of 100° F, and a winter low of -40° F.

The highest recorded winds are 80 mph.

WARRANTY:

Manufacturer shall provide a written 10-year prorated warranty on the HDPE liners. The installation shall be warranted against defects in workmanship for a period of 2 years from the date of geomembrane completion.

PART 2--PRODUCTS

MATERIALS:

Prior to the liner installation, a non-woven geotextile shall be installed to protect the liner from the subgrade. The non-woven geotextile shall meet the minimum physical requirements indicated in Table 1 below.

Table-1 Minimum Geotextile Physical Properties

Typical Properties	Test Method	Requirements
Grab Tensile Strength	ASTM D4632	205 lbs
Grab Elongation	ASTM D4632	50%
Puncture Strength	ASTM D4833	110 lbs
Mullen Burst	ASTM D3786	350 psi
Trapezoidal Tear	ASTM D4533	85 lbs
Apparent Opening Size	ASTM D4751	80 US Std Sieve
Permittivity	ASTM D4491	1.50^{-1}
Permeability	ASTM D4491	0.38m/sec
Water Flow Rate	ASTM D4491	110pm/ft^2
UV Resistance (% retained after 500 hours)	ASTM D4355	70%

The HDPE liner membrane shall be designed and manufactured specifically for the purpose of containment of liquids in hydraulic structures. It shall be manufactured from new, first-quality HDPE resin and shall meet the minimum physical requirements indicated in the Physical Properties table (Table 2). The resin used to produce the geomembrane shall be formulated to be resistant to chemical and ultraviolet degradation.

Boots for pipe penetrations shall be prefabricated and designed to fit site-specific conditions for the intended slope and size of the pipe. Boots shall be of the same material as the geomembrane.

Table-2 Minimum HDPE Geomembrane Liner Physical Properties

Typical Properties	Test Method	Requirements
Thickness-minimum average value	ASTM D751/D1593/D5199	60 mils
Thickness-individual minimum value		54 mils
Sheet Density (Min.)	ASTM D792/D1505	0.94 g/cc
Carbon Black Content (Min.)	ASTM D1603/D4218	2 %
Tensile Properties (Typical)	ASTM D 638, NSF 54 Modified, Type IV Die, 2"/min	
1. Tensile Strength at Break		228 lb/in
2. Tensile Strength at Yield		132 lb/in
3. Elongation at Break	Gage length = 2.5 in.	560 %
4. Elongation at Yield	Gage length = 1.3 in.	13 %
Tear Resistance, (Min. Value)	ASTM D1204 Die C	45 lbs
Seam Properties		
1. Shear Strength (Min.)	ASTM D4437, NSF mod	120 lb/in
2. Peel Strength (hot wedge fusion) – Min Value	ASTM D4437, NSF mod	90 lb/in
3. Peel Strength (fillet extrusion) – Min Value	ASTM D4437, NSF mod	78 lb/in
Dimensional Stability, Percent Change Each Direction (Max.)	ASTM D1204, NSF Modified	+1.0 %
Puncture Resistance (Min. Value)	FTMS 101 Method 2065	78 lbs

Certified test results from the manufacturer showing that the HDPE meets or exceeds the material requirements shall be provided.

The sheeting shall be a flexible, durable, watertight product free of pinholes, blisters, holes and contaminants.

The HDPE drainage net shall be designed and manufactured specifically for the purpose of containment of liquids in hydraulic structures. It shall be manufactured from new, first-quality HDPE resin and shall meet the minimum physical requirements indicated in the Physical Properties table (Table 3).

Table-3 Minimum Drainage Net Physical Properties

Typical Properties	Test Method	Min. Requirements
Tensile Strength	ASTM D5034/5035	45 lb/in
Transmissivity	ASTM D4716	1×10^{-3} m^2/sec
Thickness	ASTM D5199	200 mils
Density	ASTM D1505	0.94 g/cc
Carbon Black Content	ASTM D1603/D4218	2 %

Possible HDPE suppliers include GSE Lining Technologies, Inc., National Seal Co., and Serrot Corp.

PART 3--EXECUTION:

PREPARATION:

The geotextile and lining installation shall not begin until after a proper base has been prepared to accept the HDPE membrane. The base material shall be smooth and free from sharp objects that could puncture the lining. All vegetation, roots and grass must be removed. Any cracks or voids shall be filled.

The subgrade surface shall be made uniform as per the plan drawings. Abrupt changes in elevation grade of the prepared surface is to be avoided. The surface shall be compacted in accordance with Division 2, Section "Earthwork" and shaped to comply with the manufacturer's recommendations.

Acceptance of the subgrade surface by the Contractor and liner manufacturer's representative is required before proceeding with the installation of the liner. This acceptance will be limited to the amount of area that may be lined during a particular work shift. Direction and control of any subsequent repairs to the subgrade, including the subgrade surface, shall remain the responsibility of the Subcontractor. Subgrade acceptance by the Contractor does not constitute acceptance of construction variables, such as moisture content and compaction.

FACTORY QUALITY CONTROL:

Receiving Inspection

When HDPE roll goods are received from the manufacturer, the roll numbers and production lot number given on the packing list shall be verified.

Rolls shall be inspected to assure rolls have not been visibly damaged during transit.

Random testing shall be done by the Contractor to assure that the HDPE lining delivered meets project specifications for gauge, roll width, taper, positive crown, dimensional

stability, and minimum tensile properties. Test results shall be compared with the minimum requirements established by NSF Standard 54.

Fabrication and Inspection

In order to minimize field-seaming requirements during installation, individual rolls of HDPE shall be factory fabricated into large panels, to the extent possible. Factory panels will be fabricated with solvent or thermal welding. A 12-inch cross-sectional panel retainer shall be removed from each production run. This will be used for factory and field seam testing.

After the panel retains are cut, samples shall be tested for bonded seam strength (stress strength) and peal adhesion. All seam testing shall be performed as required by NSF Standard 54. Bonded seam strength tests for HDPE shall be done in accordance with ASTM D6392 (as modified in NSF Standard 54). Peel adhesion test for HDPE shall be conducted in accordance with ASTM D6392 (as modified in NSF Standard 54). All seam strength test reports shall be furnished to the Contractor.

INSTALLATION

The non-woven geotextile, HDPE drainage net and HDPE geomembrane liners shall be applied as as shown in the drawings and as recommended by he manufacture's specifications and.

Drainage Net Installation:

The drainage net shall be installed by overlapping each panel approximately 4 inches. The overlap shall be tied in place with plastic ties or approved equal at a rate of one tie every 5 feet. Ties shall be a contrasting color to the drainage net (e.g., white).

Panel Placement and Seaming:

The HDPE geomembrane liners shall be placed over the prepared surface and geotextile and drainage net as shown in the drawings, in such a manner as to assure minimum handling. The Subcontractor shall be responsible for surveying to control the location and placement of the liners. Control coordinates are shown on the plans.

The liner shall be installed in relaxed condition, free of stress or tension upon completion of the installation. Stretching the liner to fit is not permissible. Sufficient material (slack) shall be provided, to allow for geomembrane expansion and contraction.

Lap joints shall be used to seal factory fabricated panels of HDPE together in the field. Contact surfaces of the two sheets shall be wiped clean to remove all dirt, dust, moisture or other foreign materials. Field seams can be made by extrusion or hot wedge welding under the direction of the manufacturer.

The liner shall be attached to the concrete splash apron with an adhesive and a stainless steel strap. Details shall be submitted on the shop drawings. Special attention shall be given to all field seams especially around the concrete structures and pipe penetrations to assure water tightness.

The adhesive shall comply with WSD-6015 by Watersave Company Inc. or approved equal. Stainless steel shall comply with ASTM 276 and ASTM A240.

Trial Welds: Trial welds shall be performed on geomembrane samples to verify welding equipment operations and performance of seaming methods and conditions. A minimum of two trial welds shall be performed per day or shift per welding apparatus, one made prior to the start of the work and one completed mid shift. Welds shall be made under the same surface and environmental conditions as the production welds (ie., in contact with geomembrane subsurface and similar ambient temperatures).

Trial Weld Testing: Samples shall be at least five feet long and one foot wide with the seam centered lengthwise. Five, one-inch wide test strips shall be cut from the trial weld. Each of the specimens shall be tested in the field for peel. A trial weld specimen shall pass when the results are achieved for peel tests as shown in these specifications. Remaining samples shall be retained for future testing. For double-wedge welding, both welds shall be individually tested and both shall be required to pass in peel.

Field Welding:

Seams can be made by extrusion or hot wedge welding. The primary method of welding shall be double wedge welding with extrusion welding used for repairs and detailing. The machine shall be set to the predetermined temperature and speed. A trial seam shall then be run and tested to verify these settings before welding on the membrane is started. The machine settings shall be adjusted accordingly. Extrusion and single wedge seams shall have a nominal six-inch overlap and a nominal two-inch bond. Dual wedge seams shall have a nominal six-inch overlap and two half-inch wide bonds separated by a one-inch air channel.

Extrudate shall be made from the same resin as the geomembrane, and shall be free of contamination by moisture or foreign matter. Additives shall be thoroughly dispersed in the extrudate. The subcontractor shall test the resin for the following properties:

Properties	Test Method	Test Frequency
Density	ASTM D792/D1505	1 per Resin Batch
Melt Flow Index	ASTM D1238	1 per Resin Batch
Carbon Black Content	ASTM D1603/D4218	1 per Resin Batch

Results from testing shall be submitted to the Contractor.

Seams shall be welded only when ambient temperatures are between 32° F and 110° F as measured six inches above the geomembrane surface. However, temperature is of less concern to good seam quality than is moisture. For cold weather seaming, it is advisable to preheat the sheets with a radiant heater, or a hot air blower, or to use a tent in order to determine appropriate seaming conditions. No welding shall take place when it is snowing, sleeting, or raining.

Visual Inspection:

After welding, a close visual inspection of the seams shall be made. This is to be done as soon as possible after the weld has been completed. The inspection is to include weld alignment. For extrusion welding, the weld thickness and profile is to be inspected.

Defective areas shall be marked and repaired. This inspection/repair process is to be carried out in a systematic manner as soon as possible to ensure that no defective area goes unrepaired.

NON-DESTRUCTIVE SEAM STRENGTH TESTING

The Subcontractor shall perform non-destructive seam testing of all field seams over their full length using vacuum box testing, air pressure testing (for fusion wedge welded seams only), or spark testing.

Vacuum Box Testing:

The equipment shall include two vacuum box assemblies consisting of the following: a rigid housing, a transparent viewing window, a soft neoprene gasket, attached to the bottom, a port hole or valve assembly, a vacuum gauge, a vacuum device equipped with pressure control, a rubber pressure/vacuum hose with fittings and connections, a soapy solution and an applicator.

Testing shall conform to the following procedure: brush a soapy solution on the geomembrane. Place vacuum box over the wetted seam area. Ensure that a leak-tight seal is created. Apply a vacuum of approximately 5 psi. Examine the geomembrane through the viewing window for the presence of soap bubbles for not less than ten seconds. All areas where soap bubbles appear shall be marked and repaired as described in this section.

Air Pressure Testing (for fusion wedge welded seams):

The equipment shall consist of the following: an air pump (manual or motor driven) equipped with pressure gauge capable of generating and sustaining pressures over 35 psi and mounted on a cushion to protect the geomembrane, a rubber hose with fittings and connections, a sharp hollow needle, or other approved pressure feed device, and a pressure gauge.

Testing shall conform to the following procedure: seal both ends of the seam to be tested. Insert needle or other approved pressure-feed device into the channel created by the double-wedge weld. Energize the air pump to a minimum of 25 psi but no greater than 30 psi, close the valve and sustain the pressure for at least five minutes. If pressure loss exceeds 3 psi or does not stabilize, locate faulty area and repair as described in this section. Puncture opposite end of the seam to release air. If blockage is present, locate and test seam on both sides of blockage. Remove needle or other approved pressure-feed device and seal penetration holes by extrusion welding as necessary.

Spark Testing:

The spark test method consists of introducing 24 gauge copper wire placed at the edge or just under the top sheet overlap of the two sheets, prior to the welding with the extruder. After welding, a spark detector, operating at 20,000 volts, is run along the weld. If any pinholes are present, a circuit will be completed through the copper wire and the spark detector. This will sound an alarm in the detector alerting the operator the presence of a defective area. The spark test is typically used for extrusion welded seams where there is no hazard anticipated from a spark and where there is no chance of creating a vacuum seal.

The spark detector should not be used in the presence of water or excessive moisture. There is no immediate danger to human or animal life if a circuit is made through the spark detector.

Destructive Seam Strength Testing:

Destructive testing shall not be permitted.

Joints to Structures:

The HDPE membrane shall be sealed to all concrete structures and other openings through the lining with an approved adhesive and in accordance with details shown on the plans and approved shop drawings.

Factory and field fabricated pipe boots shall be used to seal all pipes penetrating the liner. All joints shall be tightly bonded.

Defects and Repairs:

The geomembrane shall be examined for defects, holes, blisters, undispersed raw materials, and any sign of contamination by foreign matter. The geomembrane surface shall be clean at the time of examination. Each suspect location shall be repaired and non-destructively tested.

Damaged geomembrane shall be removed and replaced with the same membrane type if damage cannot be satisfactorily repaired.

Any portion of the geomembrane exhibiting a flaw or failing a non-destructive test shall be repaired. Procedures available include:

- Patching used to repair large holes (over 3/8" diameter) and tears (over 2" long), and contamination by foreign matter.
- Abrading and re-welding: used to repair small seam sections (less than 12" long).
- Spot welding: used to repair small tears (less than 2" long), pinholes, or other minor localized flaws.
- Capping used to repair large lengths of failed seams.
- Removing the unsatisfactory material or seam and replacing with new material.

Patches or caps shall extend at least 6" beyond the edge of the defect, and all corners of material to be patched shall be rounded to a radius of at least 3".

Repairs shall be non-destructively tested using methods specified in this section.

Preparation of Concrete Surfaces: Concrete surfaces which are to be lined shall have all rough edges and projections removed in the area of the lining. All cracks in the concrete shall be cleaned and filled with a sand-cement mortar or approved system prior to application. Extruded expansion joint material and joint sealers shall be cut off flush. The entire surface to be lined shall be cleaned of all foreign materials and swept thoroughly.

Balast: Place load balast on the geomembrane, which will not damage liner to prevent wind uplift. Number, size and spacing shall be under the strict recommendation of the liner manufacturer and shall be detailed on the shop drawings. Balast shall consist of "sand tubes" or polypropylene bags filled with grout. Paper bags are not permitted.

FIELD QUALITY CONTROL

Surveillance will be performed by the Contractor's Representative to verify compliance of the work to the drawings and specifications.

END OF SECTION 02598

SECTION 03301--CAST IN PLACE CONCRETE

PART 1--GENERAL

SUMMARY:

Section Includes: Work includes, but is not limited to:

Concrete work for concrete ditches, headwalls, trench drains, fence posts, slabs, and other miscellaneous concrete.

REFERENCES:

The following documents, including others referenced therein, form part of this Section to the extent designated herein. The ASTM specifications referred to herein are a part of ACI 301.

AMERICAN CONCRETE INSTITUTE (ACI)

ACI 301	Specifications for Structural Concrete for Buildings
ACI 318	Building Code Requirements for Reinforced Concrete

AMERICAN SOCIETY FOR TESTING AND MATERIALS (ASTM)

ASTM A 185	Standard Specification for Steel Welded Wire Fabric, Plain, for Concrete Reinforcement
ASTM A 615	Standard Specification for Deformed and Plain Billet-Steel Bar for Concrete Reinforcement
ASTM C 33	Standard Specification for Concrete Aggregates
ASTM C 150	Standard Specification for Portland Cement
ASTM C 260	Standard Specification for Air-Entraining Admixtures for Concrete
ASTM C 309	Standard Specification for Liquid Membrane-Forming Compounds for Curing Concrete
ASTM C 494	Standard Specification for Chemical Admixtures for Concrete
ASTM C 618	Standard Specification for Coal Fly Ash and Raw or Calcined Natural Pozzolan for Use as a Mineral Admixture in Concrete

SUBMITTALS:

Submittals include, but are not limited to the following:

Mix Design: Submit mix design for each grade of concrete used.

See Section 01300, Submittals and the Vendor Data Schedule for additional submittal requirements.

QUALITY CONTROL:

Comply with provisions of ACI 301 unless otherwise specified herein.

PART 2--PRODUCTS

FORM MATERIALS:

Forms for Concrete: Furnish in largest practicable sizes to minimize number of joints. Comply with applicable provisions of ACI 301.

Form Coatings: Provide commercial formulation form-coating compounds that will not bond with, stain nor adversely affect concrete surfaces, and will not impair subsequent treatments of concrete surfaces.

REINFORCING MATERIALS:

Reinforcing Bars: ASTM A 615, Grade 60, deformed, as indicated on the drawings.

Supports for Reinforcement: Provide supports for reinforcement including bolsters, chairs, spacers and other devices for spacing, supporting and fastening reinforcing in place.

CONCRETE MATERIALS:

Portland Cement: Cement shall conform to ASTM C 150, Type I-II. The cement shall contain no more than 0.60% by weight of alkalies calculated as (Na_2O + 0.658 K_2O).

Pozzolans: Pozzolans (fly ash) shall conform to ASTM C 618 Class F, except that the loss on ignition (LOI) shall be less than 2%.

Aggregate: Fine and coarse aggregate shall conform to ASTM C 33.

Mixing Water: Potable having no pronounced taste or odor, and containing no deleterious materials.

Air-Entraining Agents (AEA): ASTM C 260.

Water-Reducing Admixtures: If water-reducing admixtures are used they shall conform to ASTM C 494, Type A, and contain no more than 1% chloride ions.

Calcium Chloride: Calcium chloride is not permitted.

RELATED MATERIALS:

Curing Compound: Curing compound or curing-hardener-sealer compound shall comply with ASTM C 309, Type I, Class A.

Red Coloring for Electrical Duct Encasement: Commercial grade red iron oxide, 3 lb per sack of cement.

Nonshrink Grout: Provide one of the following or approved equal:

"Masterflow 713"; Master Builders
"Sorrogrout"; Sonnebour Building Products
"Fire Star Grout"' U. S. Grout Co.

Joint Sealing Compound: Provide a polyurethane joint sealant material.

PROPORTIONING AND DESIGN OF MIXES:

Mix Design: Prepare design mixes for each type and strength of concrete by either laboratory trial batch or field experience methods as specified in ACI 318.

Design mixes to provide normal weight concrete with the following specified 28-day compressive strengths, minimum, as indicated on drawings and schedules:

Class 30: 3000 psi (for fence posts, footings, thrust blocks, pipe and conduit encasement)
Class 45: 4500 psi (structural concrete for ditches, headwalls, and endwalls)
Class 50: 5000 psi (precast concrete)

See ACI 301, Chapter 17 for acceptance criteria.

The concrete mix shall contain a pozzolan (fly ash) [unless otherwise approved by the Contractor's Representative].

Concrete in hard-to-place locations may utilize a high-range water reducer. No other water-reducer shall be used with a high-range water-reducer.

Durability: Concrete which will be subject to freezing and thawing, weathering, ***and*** deicer chemicals shall be air-entrained, and shall have a minimum 28-day compressive strength of 4,500 psi and a maximum water-cement ratio of 0.45. Add air-entraining agent (AEA) at the manufacturer's prescribed rate to result in concrete at point of placement having air content complying with ACI 301.

MIXING AND DELIVERY:

The manufacture and delivery of all concrete shall conform to ACI 301. Hand-mixed concrete is prohibited.

Concrete which is rejected for failure to meet any of the above requirements will be evaluated by the Contractor and may be removed and replaced at the expense of the Subcontractor.

SOURCE QUALITY CONTROL:

The Subcontractor shall provide the necessary testing and monitoring to qualify proposed materials and establish mix designs.

PART 3--EXECUTION

FORMS:

Comply with ACI 301.

PLACING REINFORCEMENT:

Comply with ACI 301.

Unless otherwise shown on the drawings, splicing of reinforcement shall be in accordance with ACI 318, Chapters 7 and 12. Unless otherwise indicated on the drawings, all splices shall be Class B tension splices for regular bars.

JOINTS:

Construction Joints: Locate and install construction joints, when not shown on drawings, so as not to impair strength and appearance of the structure, and as acceptable to the Contractor's Representative.

Joint Sealing Compound: Provide a polyurethane joint sealant compound.

CONCRETE PLACEMENT:

Comply with ACI 301.

FINISH OF FORMED SURFACES:

Rough Form Finish (RfFm): Provide as-cast rough form finish to formed concrete surfaces that are to be concealed in finish work or by other construction, unless otherwise indicated.

Smooth Form Finish (SmFm): Provide as-cast smooth form finish for formed concrete surfaces that are exposed-to-view, or that are covered with a coating material applied directly to concrete, or a covering material bonded to concrete such as waterproofing, dampproofing, painting, or other similar system.

Related Unformed Surfaces: At tops of wall, horizontal offsets, and similar unformed surfaces occurring adjacent to formed surfaces, strike off smooth and finish with texture matching adjacent formed surfaces.

SLAB FINISHES:

Trowel Finish (Trw): Apply trowel finish to monolithic slab surfaces to be exposed to view, unless otherwise indicated, and slab surfaces to be covered with paint, or other thin-film finish coating system.

Nonslip Broom Finish (Brm): Apply nonslip broom finish to exterior concrete platforms, steps, and ramps, and elsewhere as shown on drawings or in schedules.

CONCRETE CURING AND PROTECTION:

Comply with ACI 301.

REMOVAL OF FORMS:

Comply with ACI 301.

CONCRETE SURFACE REPAIRS:

Comply with ACI 301.

FIELD QUALITY CONTROL:

Subcontractor Supplied Testing: The Subcontractor shall provide the necessary testing and monitoring services for the following:

Testing services needed by the Subcontractor to control or monitor the production, transportation, placement, protection, curing or temperature of the concrete.

The use of Contractor supplied inspection or testing services shall in no way relieve the Subcontractor of the responsibility to furnish materials and construction in full compliance with the subcontract documents.

Contractor Supplied Testing: The Contractor's Representative will perform tests during placement and curing of the concrete. Monitoring of concrete protection and curing methods may also occur.

Sampling and testing for quality control during placement of concrete may include any of the tests specified in ACI 301 16.3.

END OF SECTION 03301

SECTION 03400--PRECAST CONCRETE

PART 1--GENERAL

SUMMARY:

The Subcontractor shall provide all plant, labor, and materials required to construct and install precast concrete complete with accessories, reinforcing, and grout, as required by the drawings and these specifications.

Section Includes: Work includes, but is not limited to:

Furnish and install precast concrete as shown on the drawings.

Related Sections: Section 03301, Cast In Place Concrete

REFERENCES:

The following documents, including others referenced therein, form part of this Section to the extent designated herein.

AMERICAN CONCRETE INSTITUTE (ACI)

ACI 301	Specifications for Structural Concrete for Buildings
ACI 318	Building Code Requirements for Reinforced Concrete

AMERICAN SOCIETY FOR TESTING AND MATERIALS (ASTM)

ASTM C990	Standard Specification for Joints for Concrete Pipe, Manholes, and Precast Box Sections Using Preformed Flexible Joint Sealants
ASTM A36	Standard Specification for Carbon Structural Steel
ASTM A48	Standard Specification for Gray Iron Casting (R 1990)
ASTM A185	Standard Specification for Steel Welded Wire Fabric, Plain, for Concrete Reinforcement
ASTM A615	Standard Specification for Deformed and Plain Billet-Steel Bars for Concrete Reinforcement (AASHTO No. M31)

AMERICAN ASSOCIATION OF STATE HIGHWAY AND TRANSPORTATION OFFICIALS (AASHTO)

AASHTO	Standard Specification for Highway Bridges

SUBMITTALS:

Submittals include, but are not limited to the following:

Shop Drawings: Submit drawings indicating fabrication and erection requirements. Show details of joints, reinforcements, inserts, and lifting devices.

See Section 01300, Submittals and the Vendor Data Schedule for additional submittal requirements.

QUALITY CONTROL:

Qualifications of Workmen: Precastor shall be regularly engaged in the manufacture and erection of precast concrete products, having a recognized background in such work.

Codes and Standards: Comply with provisions of ACI 301 unless otherwise specified herein.

Testing: Perform design mix test and field tests in accordance with Section 03301, Cast In Place Concrete, except that not less than 2 production sets of strength tests will be taken from separate pours.

STORAGE AND HANDLING:

Follow recommendations of ACI 318 for precast concrete.

Lift only at designated lifting and support points by approved devices.

Protect edges from spalling, chipping, or cracking with suitable padding or wrapping.

PART 2--PRODUCTS

FORM MATERIALS:

Forms for Exposed Finish Concrete: Unless otherwise indicated, construct formwork for exposed concrete surfaces with plywood, metal, or metal-framed plywood faced to provide continuous, straight, smooth, exposed surfaces. Furnish in largest practicable sizes to minimize number of joints. Provide form material with sufficient thickness to withstand pressure of newly-placed concrete without visible bow or deflection.

Plywood shall comply with American Plywood Association, grade "EXT-DFPA Plyform" or better.

Forms for Unexposed Finish Concrete: Form concrete surfaces which will be unexposed in finished structure with plywood, lumber, or metal.

Form Coatings: Provide commercial formulation form-coating compounds that will not bond with, stain nor adversely affect concrete surfaces, and will not impair subsequent treatments of concrete surfaces.

REINFORCING MATERIALS:

Reinforcing Bars: ASTM A615 Grade 60 deformed.

Welded Wire Fabric (WWF): ASTM A185, welded steel wire fabric.

Supports for Reinforcement: Provide supports for reinforcement including bolsters, chairs, spacers and other devices for spacing, supporting and fastening reinforcing in place. Use wire bar type supports complying with CRSI recommendations, unless otherwise indicated. Use supports with sand plates or horizontal runners where base material will not support chair legs. Pumice blocks are not acceptable for rebar or wire mesh supports.

Concrete Mix: Comply with applicable requirements of Section 03301 for following concrete class:

Cement:	Type II
Class 50:	5,000 psi 28-day compressive strength
Slump:	3 in. $\pm$ 1 in.

Metal Accessories:

Frames and Covers: Grey cast iron, ASTM A48, Class 30. Capable of withstanding AASHTO H20 truck traffic.

Vault Steps: Grey cast iron, ASTM A48, Class 30B, integrally cast into manhole sidewalls, unless otherwise indicated.

Joint Sealants: Comply with ASTM C990, Preformed Flexible Joint Sealants.

DESIGN CRITERIA:

General: All precast concrete shall be designed in accordance with ACI 318.

Loads: The precast structure shall be capable of supporting an AASHTO H20 truck axle load. All precast items shall be capable of withstanding all lifting and handling loads.

FABRICATION:

General: Maintain formwork to provide complete precast concrete of the shape, lines, and dimensions indicated. Provide and install chamfer strips on exterior edges.

Casting Tolerances:

Length ± 1/2 in.
Width ± 1/4 in.
Depth ± 1/4 in.
Position of handling devices ± 2 in.
Position of embedded angles to be welded between adjoining panels ± 1 in. longitudinally.
Deflection 1/8 in per 10 ft, but not greater than 1/2 in. between adjoining panels.
Squareness of Ends (vertical and horizontal alignment) ± 1/4 in.

Finishing: Fabricate with a smooth form finish. See Section 03301.

Curing: Comply with applicable requirements of Section 03301.

Lifting: Do not lift precast units until concrete has obtained a minimum of 3,500 psi compressive strength (fc') as determined by test cylinders cast on the same day. If design requires a higher compressive strength before lifting the higher strength shall apply.

PART 3--EXECUTION

INSPECTION:

Before installing, verify conditions are adequate to receive precast units. Required corrections to be made before proceeding with placement.

Determine field conditions by actual measurements. Double check and cross check measurements.

All precast structures shall be inspected prior to placement for damage or casting deviations in excess of tolerances specified.

ERECTION:

Employ only competent personnel who are properly trained to prepare, handle, and install precast concrete.

Method of installation shall avoid soiling, cracking, chipping of concrete, and damage to built-in items.

Apply joint sealant material at joints of sections.

Nonshrink grout may be used for leveling or filling holes in precast sections.

FIELD QUALITY CONTROL

Surveillance will be performed by Contractor's Representative to verify compliance of the work to the drawings and specifications.

END OF SECTION 03400

SECTION 09810--POLYUREA SPRAY-ON COATING

PART 1--GENERAL

SUMMARY:

The Subcontractor shall furnish all labor, materials and equipment required for preparation of the surfaces for application of the polyurea spray-on coating to the designated areas including installation of the geotextile liner.

Installation and application of the geotextile liner and polyurea spray-on liner will be conducted per the drawings and specifications designated herein.

Section Includes: Work includes, but is not limited to:

Preparation work (i.e., cleaning and abrading) including grading and compacting of the subgrade, installation of the geotextile liner and application of the polyurea spray-on liner material to all designated areas.

Definitions:

Elastomeric polyurea lining includes a penetrating, three-component, urethane/cementitious primer, a geotextile liner for support over unstable substrates, (i.e., gravel, soil, unsound asphalt, unsound concrete), and a spray applied, high build, polyurea elastomeric coating.

PERFORMANCE REQUIREMENTS:

Performance to the following criteria shall be the responsibility of the vendor/applicator. Details shown in the drawing and these specifications have been provided, however, changes to these details necessary to meet the performance criteria may be submitted to the Contractor for approval.

Performance criteria to be met by the polyurea lining system include:

- strength
- safety
- bonding
- aesthetic appeal

Strength:

The polyurea lining system shall be strong enough to withstand extreme loading conditions. This may include occasional occurrences of heavy equipment which can

reasonably be expected to cross the lining system, (i.e., a track hoe weighing 31,000 pounds (representing the greatest concentrated load) and a crane weighing 190,000 pounds (representing the greatest total distributed load).

The lining system shall also be durable enough to accommodate traffic conditions defined as at least daily occurrences of foot traffic, normal vehicle traffic (defined as pickups or cars driven across the areas approximately four times per day).

Safety:

The polyurea lining system shall be applied in manner that is safe for both foot and vehicle traffic that may come into contact with the surface. A high friction surface shall be applied per the manufacturer's specification.

Significant buckling resulting from an improperly anchored geotextile, which creates tripping, or slipping hazards from accumulated water, snow or ice, and/or access problems shall not be allowed.

Bonding:

The polyurea lining system shall be bonded to various materials including the geotextile, road base, uncompacted gravel, miscellaneous protrusions (i.e., pipes and footings), and building foundations. The lining system shall not pull away or crack around from these surfaces due to the normal wear and traffic conditions or normal temperature fluctuations.

Aesthetic Appeal:

The polyurea lining system shall be installed in a manner that is visually acceptable to those who visit and work at the facility. The finished work shall be free of foreign material, ridges, waves, laps, sags and variations in thickness and finish. All coats shall be applied to produce a monolithic uniform liner

REFERENCES:

The following documents, including others referenced therein, form part of this Section to the extent designated herein:

INEEL Emergency Preparedness Plan - Addendum 2 (ICPP [INTEC]), Latest Revision.
OU 3-13 TFIA Health and Safety Plan
AMERICAN SOCIETY FOR TESTING AND MATERIALS (ASTM)

SUBMITTALS: Submittals include, but are not limited to the following:

See Section 01300, Submittals and Vendor Data Schedule for additional submittal requirements.

Quality Control Plan:

Submit an installation quality control plan for approval. Specific details shall be shown where spraying around structures, pipes, ditches, and other interferences.

Material Data:

Submit Manufacturer's technical specifications, installation instructions, and chemical resistance data on the geotextile liner and the materials used to anchor the geotextile to the various surfaces to which it will be attached.

Submit Manufacturer's technical specifications, installation instructions, and chemical resistance data for the polyurea spray-on liner material, including any primers, or other additional coatings as required.

Include physical and performance properties. For any data not listed in the manufacturer's standard nationally published data, the manufacturer must supply the missing data accompanied by independent testing laboratory test results which prove compliance in accordance with the referenced standard(s). All manufacturers information must be the most current available and will supersede all prior data.

Submit material data indicating compliance with the requirements of these specifications, including surface preparation and application instructions.

Submit color chart of the various colors available for the polyurea coating.

Certification:

Submit certification that the material supplied meets the Materials requirements.

Samples:

Submit, for verification purposes, 4-inch square samples of each type of geotextile liner and elastomeric polyurea lining required, applied to a rigid backing, in color and finish indicated.

Submit a 2-ft by 2-ft sample of the polyurea product with the high friction surface.

Subcontractor's Qualifications:

The Subcontractor shall furnish a list of projects of similar size and complexity using either a specified or similar material that they have installed and applied during the last five years. Information shall include: project name, square footage, and contractor contact name with contractor's address and phone number.

The Subcontractor shall furnish resumes detailing the experience of key project personnel including supervisors and mechanics.

Qualifications:

Submit certification that the Subcontractor meets the requirements of the "Qualifications" article of this Section.

Sample Warranty Letter

A sample warranty letter must be included with bid package or bid may be disqualified.

QUALITY CONTROL:

Qualifications:

Installation shall be performed by a manufacturer approved by the Subcontractor with skilled mechanics having not less than five years satisfactory experience in the installation of geotextile material and application of polyurea spray-on coatings as specified in this section. Subcontractor shall have completed at least three projects of similar size and complexity during the last 5 years. Applicator must have a certified operator operating spray equipment at all times. Refer to Part III for Spray Equipment requirements.

Single Source Responsibility:

Obtain primary lining materials including primers, resins, hardening agents, finish or sealing coats from a single manufacturer or as approved by the polyurea manufacturer, with not less than ten years of successful experience in manufacturing and installing principal materials described in this section. Provide secondary materials only of type and from source recommended by manufacturer of primary materials.

Project Control:

The product Manufacturer shall be responsible for supervising and controlling the installation of the special coatings covered by this specification.

ISO 9002:

All materials, including primers, resins, curing agents, finish coats, aggregates and sealants are manufactured and tested under an ISO 9002 registered quality system.

Qualified Materials:

Product substitutions must be submitted to the INEEL Procurement Department two weeks prior to bid date. Submit the following proof documents:

1. Third party laboratory testing data confirming that the proposed material substitution meets or exceeds the performance criteria stated in Part II of this specification.

2. Third party laboratory testing data confirming that the proposed material substitution is a true polyurea lining system. Due to the harsh climate and low temperature constraints only true polyurea systems will be accepted, no hybrid lining systems.

Once the criteria stated above has been satisfied and the INEEL Project Manager accepts the third party data, the proposed Product Substitution becomes a Preliminary Qualified Material and is an acceptable product for bidding purposes. However, all products must pass an on-site testing performance evaluation to demonstrate the product will meet the performance criteria of strength, safety, bonding and aesthetic appeal performed by INEEL to become a qualified and approved product for application. If the product has not been previously, successfully demonstrated at the INEEL, include in your base bid the cost for all materials and labor to install an approximately 900-ft^2 demonstration plot of the Preliminary Qualified Material, including all specified penetration and termination details. The demonstration will be used to conduct INEEL's on-site testing. If the demonstration passes the on-site evaluation test then the Preliminary Qualified Material may become the approved and Qualified Material for the entire project scope detailed in this package, otherwise, it will not be accepted.

DELIVERY, STORAGE AND HANDLING:

Materials shall be delivered to job site and promptly checked by the Subcontractor for completeness and shipping damage prior to job start. Damaged material shall only be used at

the discretion of the Contractor's Representative. Materials shall be delivered in the manufacturer's undamaged, unopened containers. Materials will not be accepted or used which exceed the manufacturers recommended shelf life. Each container shall be clearly marked with the following:

- Product name(s) and/or Numbers
- Manufacturers name
- Manufacturer date or batch code
- Component designation
- Product Mix Ratio
- Date which material will exceed shelf life
- Manufacturer's Health and Safety Information
- CHEMTREC Emergency Response Information

All materials used shall be factory pre-weighted and prepackaged in single, easy to manage batches to eliminate on site mixing errors. No on-site weighing or volumetric measurements will be allowed.

Storage and handling of the materials shall conform to the manufacturer's recommendations and shall be done in such a manner as to prevent damage to any part of the containers, product, personnel and environment. All materials shall be carefully handled and stored to prevent inclusion of foreign materials.

Materials shall be stored according to the manufacturer's instructions, with seals and labels intact and legible. Materials shall be stored in a dry, enclosed area protected from exposure to moisture. Temperatures shall be maintained within the manufacturer's specified required range. Materials outdated as indicated by the manufacturer's shelf life specifications shall not be used.

The Subcontractor shall be responsible for materials furnished by him, and shall replace, at his own expense, such materials that are found to be defective in manufacture or that have become damaged in transit, handling or storage.

Preventative spill measures shall be required and implemented per the manufacturer's specifications. Preventative spill measures and spill response activities shall be conducted in accordance with the project health and safety plan and the INEEL Emergency Preparedness Plan - Addendum 2 (ICPP [INTEC]), Latest Revision.

JOB CONDITIONS:

The purpose of applying the geotextile and polyurea spray-on liner is to seal approximately 5 acres of unpaved surface. Refer to subcontract drawings for the locations of the areas to be sealed.

Work control zones shall be established and the specific configuration and distances from the application area will be per the manufacturer's technical specifications or the Contractor's requirments.

Appropriate barricades and signs shall be utilized to establish an effective access control to the application area. "No Smoking" and other warning signs shall be posted as necessary in the work area during application of the lining system.

Only trained, authorized persons equipped with specified personal protective equipment (PPE) will be allowed to enter the work control zone. Applicators shall wear and utilize all safety equipment as recommended in the Material Safety Data Sheets and in the OU 3-13 TFIA Health and Safety Plan when handling, mixing and applying the lining system.

Open fires and spark producing equipment shall not be used in or near work areas during the application of the lining system.

Numerous small buildings and protrusions (i.e., valve boxes, wells, piping, etc.) are located in the area to be sealed. Various types of surfaces to which the spray-on liner shall be sealed include gravel, concrete, asphalt, wood and metal.

Work unrelated to site preparation, geotextile installation or application of the spray-on liner shall not occur during or within 8 hours in close proximity to areas where these activities are being conducted.

Defects:

> Conditions that may be detrimental to start up, completion or performance of the specified work shall be reported in writing to the Contractor prior to commencing work. Work shall not be started until defects are corrected or specific approval has been given in writing.

Costs incurred that are associated with damage from negligence of or inadequate protection shall be the sole responsibility of the Subcontractor.

The Subcontractor shall not apply the geotextile or polyurea spray-on liner to areas containing standing water or snow.

WARRANTY:

The Subcontractor and manufacturer shall furnish a standard joint and several, written warranty covering materials and workmanship for a period of five (5) full years from date of installation. The labor and material warranty shall include loss of bond and wear-through of the seal coat from normal use. A sample warranty letter must be included with bid package or bid may be disqualified.

PART 2--PRODUCTS

GENERAL:

The materials supplied under these specifications shall be designed and manufactured specifically for the purpose of this work and shall have been satisfactorily demonstrated by prior use to be suitable and durable for such purposes.

MATERIALS:

The Polyurea lining system is comprised of a penetrating, three-component, urethane/cementitious primer, a geotextile liner for support over unstable substrates, i.e., gravel, soil, unsound asphalt, unsound concrete, and a high build, polyurea elastomeric membrane.

Geotextile Liner:

Prior to the polyurea liner installation, a geotextile liner shall be installed to protect the liner from the subgrade. The geotextile liner shall meet the minimum physical requirements indicated in Table 1 below or shall be an Enkadrain 9611 liner or approved equal.

Table-1 Minimum Geotextile Physical Properties

Typical Properties	Test Method	Requirements
Grab Tensile Strength	ASTM D4632	250 lbs
Grab Elongation	ASTM D4632	50%
Puncture Strength	ASTM D4833	150 lbs
Mullen Burst	ASTM D3786	460 psi
Trapezoidal Tear	ASTM D4533	100 lbs
Apparent Opening Size	ASTM D4751	100 US Std Sieve
Permittivity	ASTM D4491	1.20 sec^{-1}
Permeability	ASTM D4491	0.30 cm/sec
Water Flow Rate	ASTM D4491	85 gpm/ft^2
UV Resistance (% retained after 500 hours)	ASTM D4355	70%

Primer:

Primers shall be obtained from the selected polyurea lining system vendor and shall be an integral part of the polyurea lining system application. Primers for the various substrates will be selected and approved by the polyurea lining system manufacturer's technical representative.

Elastomeric Polyurea Liner:

The polyurea elastomer shall be formed by reacting an amine resin with an isocyanate. The amine resin component shall not include polyol. The reacted polyurea elastomer shall have the following application properties.

a. Gel Time ..... 3 to 8 seconds
b. Cured for foot traffic ..... 60 minutes
c. Cured for water exposure ..... 10 minutes

Physical Properties: Provide a lining system in which physical properties of topping, when tested in accordance with standards or procedures referenced below, are as follows:

Tensile Strength ..... 2,300 psi
(ASTM D-638)
Hardness 46
(ASTM D-2240/Shore D Durometer)
Bond Strength ..... >450 psi
(ASTM D-4541) (100% concrete failure)
Abrasion Resistance ..... 0.02 gm max. weight loss
(ASTM D-4060, Taber Abrader CS-17 wheel)
Elongation 400
(ASTM D-638)
Tack Free Time ..... Less than 2 minutes
(at 77°F/25°C)
Hydrostatic Pressure Resistance Test ..... Pass
(ASTM D-5385 / 231 ft. of water)
Low Temperature Flexibility Test ..... -20°F Pass
(ASTM D-1970 / 180° Bend)

Approved polyurea lining systems include Semstone 403 (Stonflex HPE) or Sherwin Williams Foamseal V9256/FSA64 or approved equal.

Color:

Colors will be specified upon receipt of the Manufacturer's color chart.

PART 3--EXECUTION

GENERAL

The installation and application techniques provided in this section are general guidelines. The manufacturer's recommendations shall be used as applicable.

The geotextile and each component of the polyurea spray-on liner will be installed in compliance with the manufacturers written installation instructions. Mixing and installation methods, cure times and environmental regulations shall be strictly adhered to.

SURFACE PREPARATION:

All Surfaces:

Test for substrate temperature by using a surface dial thermometer or equal. Temperature shall be within temperature parameters recommended by the lining material manufacturer.

Inspect for contamination, such as oil, grease, or chemical spills. Contamination must be removed prior to application of lining.

Areas found to be unsound or non-durable must be brought to the attention of the Contractor.

For thorough instructions regarding preparation of the various types of surfaces encountered, consult manufacturer.

Compressed air or water used for surface preparation shall be free of contaminants. Oil and water filter/separators shall be installed in the air supply.

Prior to coating all materials except for the geotextile liner over gravel, surfaces shall be vacuumed or blown down with compressed air to remove residual dust.

Simultaneous coating application and surface preparation operations shall not be conducted where possible contamination of the coating may occur.

All areas that will not be coated should be properly protected prior to the commencement of surface preparation activities. The tank farm fence shall be protected from overspray so that other activities outside or inside the fence shall not affected.

Surfaces which are to be covered by materials specified in this specification shall have all rough edges and projections removed. The entire surface to be lined shall be clean, dry, and free of debris or other surface contaminants and swept thoroughly.

Preparation of Earth Subgrade:

The surface of the subgrade shall be prepared by excavating and grading to the elevations and sections as shown on the drawings and as designated in the field. The prepared subgrade shall be shall be free from debris, cobbles, rubbish and organic

material. The surface of the completed subgrade shall be compacted in accordance with Division 2 Section, "Earthwork" and shall be smooth, uniform and free from sudden changes in grade.

Preparation of Geotextile Surfaces:

Before application to a geotextile surface, the geotextile shall be free of loose debris or any other contaminant that would decrease adhesion between the coating system and the geotextile.

Preparation of Concrete Surfaces:

Concrete substrate shall be dense, free of voids, fins, honeycombs and other imperfections. Horizontal surfaces shall have a "once over" steel trowel finish (wood float, broom or machine trowel finishes are unacceptable). Finish concrete to the required grade, less allowance for overlayment/ thickness. A vapor barrier shall be present for concrete on or below grade to prevent osmotic pressure forces from affecting adhesion of overlayment. Cure concrete 30 days minimum and conduct the following tests prior to application of overlayment:

Concrete preparation shall be by mechanical means and may include use of a scabbler, scarifier, shot blast, sand blast, high pressure water or air blast, or sand injected water blast machine for removal of bond inhibiting materials such as curing compounds or laitance to produce a rough and clean surface finish. Care shall be taken to ensure all loose material is removed completely.

1. Test for "bird baths", if complete drainage is critical, by flooding horizontal surfaces with water and marking unacceptable areas. Unacceptable areas are to be corrected prior to application of overlayment.

2. Test for unacceptable moisture content in concrete by the "plastic sheet" method (Ref. ASTM D-4263). The number of test sites shall be representative of the scope of work.

3. Test for acceptable concrete surface tensile strength of 200 psi minimum by using a "pull-out test" (Ref. ASTM D-4541) in which a 0.8 inch diameter dolly is bonded to the concrete with polymer adhesive and a 1.0 inch diameter hole is cut through excess adhesive into concrete. The number of test sites shall be representative of the scope of work.

4. Control joints shall be treated by lining manufacturer to assure bridging of potential cracks and to maintain monolithic protection.

5. Cold joints or construction joints shall be treated by lining manufacturers to assure bridging potential cracks and to maintain monolithic protection on horizontal and vertical surfaces as well as horizontal and vertical interfaces.

6. Vertical and horizontal expansion/contraction joints shall be treated by installing backer rod and compatible sealant before lining is installed to assure bridging of joint movement and to maintain monolithic protection.

7. Cracks in vertical or horizontal concrete substrates shall be treated by lining manufacturer to assure bridging of cracks and to maintain monolithic protection.

8. Inside corners shall be treated with either an elastomeric or epoxy mortar radius (½" minimum) prior to application of the lining.

9. Outside corners shall be ground to remove sharp corners. Rout all cracks and joints to form a "V" groove.

Preparation of Steel Surfaces:

Surrounding steel preparation shall be abrasive blasted to near white metal, according to SSPC-SP10.

All steel surfaces shall have a surface profile in the range of 3 to 5 mils. The surfaces of heavily corroded steel, containing grooving or pinholes, shall be opened up and sharp edges shall be removed.

All metal surfaces that have been prepared shall be coated within the same day. No metal shall be coated that develops visible rust bloom.

Preparation of Wood Surfaces:

Wood substrate shall be clean, sound and free of all bond inhibiting contaminants such as dirt, grease, oil, wax, etc.

Wood surfaces shall be hand or power tool sanded to provide a surface free of loose material and contamination. Wood should have roughened surface prior to primer application.

MATERIAL INSTALLATION:

General:

Materials shall be installed per the manufacturer's written instruction. Any deviation from these instructions shall be conducted only under the direction of the Contractor.

Geotextile Liner Installation:

The geotextile liner shall be placed over the prepared surfaces to be lined in such a manner to assure minimum handling. The geotextile shall be placed, and anchored to the subsurface per the manufacturer's written instructions to eliminate flapping and wrinkles during application of the polyurea spray-on liner.

The geotextile liner shall be attached to all structures and other protrusions in accordance with the details shown on the drawings. The lining shall be closely fitted around inlets, outlets, and other projections through the lining. Weather reports shall be obtained to ensure that proper installation conditions specified by the manufacturer will exist during the installation schedule. Any portion of lining damaged during installation by any cause shall be removed or repaired as specified hereinafter.

Surface Priming:

All properly prepared substrates shall be primed using appropriate manufacturer's primers with strict adherence to installation the manufacturer's technical specifications.

All primed surfaces shall be inspected prior to the application of the polyurea coating to ensure that a pinhole free surface is obtained. Additional primer coats may be required.

All bug holes shall be filled as part of the priming process.

Polyurea Coating Spray Equipment:

The type and condition of the spray equipment is critical to produce a high quality polyurea lining with the proper physical properties. Use of any spray equipment that does not comply with this section of the specification is strictly prohibited without the written approval of an authorized technical representative.

Spray pump and heating unit shall be Gusmer Model H-3500 or Model H-2000, as manufactured by Gusmer, Lakewood, NJ, (201) 370-9000. Other Gusmer models may be acceptable for specific projects subject to written approval by the authorized polyurea manufacturer's technical representative.

Spray gun shall be a Gusmer Model GX7 or GX7-400 as manufactured by Gusmer.

Spray gun mixing module shall have two ports of entry for each component of the lining system. The spray gun mixing module shall be a Gusmer module compatible with the Gusmer GX7 or GX7-400 gun. No other mixing module will be acceptable without the written approval of an authorized technical representative.

Drum heaters shall be required to heat material if material temperature is below 65°F.

Polyurea Spray-On Liner Application:

Application of the polyurea coating shall be conducted with strict adherence to temperature requirements and installation instructions. The polyurea coating shall be applied to a clean, dry surface during periods of favorable temperature and humidity conditions.

Allowable recoat intervals shall be observed between the initial application and any subsequent overcoats.

Spray apply elastomeric polyurea lining at a 1:1 ratio over properly cured primer with strict adherence to manufacturer's installation procedures including but not limited to:

1. Primary Heat:..... 155°F
2. Hose Heat: ..... 150°F
3. Spray Pressure: ..... 1,200-2,000 psi with no greater than 300 psi pressure differential between sides.

All surfaces to be lined with the polyurea coating shall receive no less than 125 mils in a single coat.

All lining application shall be applied in two (2) or more build passes, each in the opposite spray pattern direction.

Good painting practice shall be used to produce a high-quality application that has uniformity of thickness and is free of excessive run, sags, surface contaminants, overspray, or dry spray.

High Friction Surfacing:

A high friction surface shall be achieved using the manufacturer's recommended aggregate and installation method. The surface friction coefficient shall be no less than 0.9. A 2-ft by 2-ft sample of the polyurea product with the high friction surface shall be submitted to the Contractor for approval.

CURING, CLEANING AND PROTECTION:

Curing:

All materials requiring curing times will remain protected and curing will be conducted under the manufacturers written instructions. Care will be taken to prevent contamination to the product following installation prior to completion of the curing process. Newly coated areas shall be protected from traffic or other activities for a minimum of 1 hour.

Protect polyurea lining system from damage and wear during construction operation. Where temporary covering is required for this purpose, comply with manufacturer's recommendations for protective materials and method of application. The Subcontractor is responsible for protection and cleaning of surfaces after final coats.

Cleanup:

Remove any temporary covering and clean the polyurea lining system just prior to final inspection. Use cleaning materials and procedures recommended by lining manufacturer.

During the progress of work, the Subcontractor shall remove from the site all discarded decontaminable materials designated in this section including rubbish, cans, drums and rags at the end of each workday and shall be disposed of per the project Waste Management Plan.

The Subcontractor shall clean all liner equipment, brushes, sprayers, and related materials as recommended by the manufacturer, at the end of each day.

Upon completion of the spray-on liner application, the Subcontractor shall clean splattered surfaces, remove splatters by proper methods of wiping and scraping, using care not to scratch or otherwise damage finish surfaces. Repainting of splattered surfaces may be required if finishes are damaged.

At the completion of work, the Subcontractor shall touch-up, restore, and/or recoat surfaces of unacceptable work.

WORKMANSHIP:

The finished work shall be free of foreign material, ridges, waves, laps, sags and variations in thickness and finish. All coats shall be applied to produce a monolithic uniform liner

FIELD QUALITY CONTROL:

Inspection and surveillance will be performed by the Contractor's Representative to verify compliance of the work to the drawings and specifications.

The timely and daily completion of inspection documents by the subcontractor, or his designate is required throughout the course of the job. These forms should record the following inspections:

- Surface preparation
- Surface temperature
- Dew point of substrate
- Temperature and humidity of ventilating air
- Batch numbers and identification of mixed coating components
- Application rate of individual coats
- Recoat intervals
- Location and repair of defects (i.e., pinholes)
- Determination of degree of cure

The Contractor may engage services of an independent testing laboratory to sample materials being used on the job site. Samples of materials may be taken, identified and sealed, and certified in the presence of the Contractor

Testing laboratory may perform tests for any of characteristics specified, using applicable testing procedures referenced herein and in manufacturer's product data.

All coating inspection instruments, inspection standards, calibration standards and testing materials shall be in good working order, appropriate for the use intended and where required, have been calibrated within 12 months of their use or as specified in the instrument calibration specification. The Contractor shall have access to all required calibration certificates.

The right is reserved to invoke the following material testing procedure at any time, and any number of times during period of lining application.

If test results show materials being used do not comply with specified requirements, the Contractor may direct the Subcontractor to stop work; remove non-complying materials; pay for testing; reapply lining materials to properly prepared surfaces which had previously been coated with unacceptable materials.

1. Gel Test: Conduct a field gel test on a vertical surface to confirm 6 to 8 second gel time.

2. Thickness Test: Apply lining material onto a polyethylene board with the number of spray gun passes to be used during installation. After the material cures for a few minutes, remove the material from the board and measure thickness. If thickness is

not within the nominal specified range, adjust number of spray gun passes and repeat test.

3. Retained Field Samples: Return field samples used for thickness test to lining manufacturer, who shall retain samples as part of the manufacturer's project record.

Manufacturer's representative must submit a letter of compliance and warranty upon final inspection.

END OF SECTION 09810

SECTION 15401--UNDERGROUND PIPING AND PLUMBING SYSTEMS

PART 1--GENERAL

SUMMARY:

The Subcontractor shall furnish and install all equipment, materials and supplies and perform all work and operations necessary for furnishing and installing the underground piping and plumbing systems and appurtenances to complete the work as shown on the subcontract drawings and specified herein. Upon completing installation of the piping systems, the Subcontractor shall operate and test as specified hereinafter to verify that the systems are properly installed and operate as required.

Section Includes: Work includes, but is not limited to:

Furnish and install all valves, tubing, pipe, flanges, traps, fittings, couplings, strainers, hangers, supports, insulation, and appurtenances as required to complete the work as shown on the subcontract drawings for the following systems:

Underground Storm Drain Piping
Storm Drain Lift Station Piping

SUBMITTALS:

Shop Drawings: Shop drawings shall include the following:

Principal dimensions and details of construction.
Sizes and location of piping and components.

Maintenance Manuals: Provide maintenance and operation manuals with complete parts lists for valves and assemblies.

See Section 01300, Submittals and Vendor Data Schedule for additional submittal requirements.

QUALITY CONTROL:

Qualifications: Underground piping and plumbing shall be furnished and installed by a firm qualified, accredited and regularly engaged in this type of work, and shall maintain shop and facilities for fabrication and maintenance of subject equipment.

Items of Any One Classification: Items which are used in quantity, such as valves, specialties, accessories, fittings, etc., shall in each case be the product of one manufacturer, and shall be used only for the services recommended by the manufacturer.

Pipe Joints: Any leaks, revealed by the pressure testing procedure, shall be repaired at no additional cost to the Contractor. Leaks in piping or joints shall be repaired per the manufacturer's written instructions.

Testing: Force main piping shall be hydrostatically pressure tested and inspected in accordance with ANSI B31.1. No testing is required for plastic and metal gravity piping.

MATERIAL DELIVERY, STORAGE AND HANDLING:

Delivery: Subcontractor shall ensure that all materials are delivered in a new, undamaged and protected condition.

Receiving Inspection: Each shipment shall be inspected by the Subcontractor prior to acceptance. If damage is found or any material, identification, and/or documentation is missing, this fact shall be promptly reported to the delivering carrier(s), the manufacturer and the Contractor's Representative.

Storage and Handling: Materials shall be resealed and repacked after inspection, and shall be stored in its original protective packing, or its equivalent. The Subcontractor shall ensure that materials are stored in a manner to provide protection against damage, atmospheric corrosion and contamination.

PART 2--PRODUCTS

GENERAL:

All materials, products and equipment shall be as manufactured by the manufacturer specified in this section, or approved equal.

PIPE AND FITTINGS:

Ductile Iron Pipe and Fittings: To be used inside the lift station, and attached to valves or other structures. Pressure pipe and fittings shall be ductile iron pipe Class 200 for 8" lines, flanged, and conform to the mechanical properties of ANSI/AWWA C151/A21.51, UL Listed, cement lined per AWWA C104/A121.4 and have the manufacturers standard asphalt coating outside. Fittings, eyes reducers, elbows shall conform to ANSI/AWWA C110/A21.10 and ANSI/AWWA C111/A21.11.

Service: Flanged joints shall be used for all above ground applications and mechanical joints shall be used for all underground applications of ductile iron pipe.

Plastic Piping: Underground plastic pressure and gravity piping shall be Class 100 (DR 25) polyvinyl chloride (PVC) per ASTM D1784 and ASTM D3139, and meeting AWWA C900 requirements. Normal operating design pressure is 20 psi.

Metal Piping: Underground metal gravity piping shall be 16-gage minimum galvanized corrugated steel pipe, unless otherwise specified, with standard gasketed or o-ring connection bands at all joints (see Section 02430).

PART 3--EXECUTION

INSTALLATION OF ALL SYSTEMS:

General: Shall be in conformity with the applicable requirements of the Uniform Plumbing Code.

PIPELINES:

Underground Pipelines: Pipe shall be bedded in 4 in. of sand minimum or other approved granular material.

Install pipe to uniform pitches between points for which elevations are established. Use level or other approved method to accomplish this. Provide bends or elbows for changes in directions. One-quarter bends shall be long sweep type.

Between bends or elbows, lines shall be straight, free from irregularities, and have smooth interior surfaces.

Anchorage against slippage shall be provided by means of concrete or masonry piers, tie rods and pipe clamps, or other approved means. Joints shall be made accessible for inspection and repair prior to testing and backfilling.

Pipe and Equipment Identification and Valve Tags:

After installation, all pipelines and equipment shall be identified by tagging with their line number or designation as shown on the drawings. The tag shall be fabricated from 24 gage, ¾ in. wide, 3-in. long, AISI Type 303 or 304 stainless steel metal strip with 3/16 in. high letters stamped in the metal surface. Tagging shall be done as shown on the drawings.

Locator Ribbon: See Section 02200 for buried pipe identification ribbon requirements.

FIELD QUALITY CONTROL:

Subcontractor Supplied Testing: All testing shall be witnessed by the Contractor's Representative.

The Subcontractor shall furnish temporary connections to services for testing.

Tests shall be conducted before making final connections to equipment.

Contractor Inspection: Surveillance will be performed by Contractor's Representative to verify compliance of the work to the drawings and specifications.

END OF SECTION 15401

SECTION 15480--STORMWATER LIFT STATION

PART 1--GENERAL

WORK DESCRIPTION:

Install a precast, concrete lift station in accordance with the plans and specifications.

Furnish and install 2 submersible stormwater pumps and all associated piping, valves and wiring.

RELATED SECTIONS:

16000 Electrical General Provisions

QUALITY CONTROL:

Pump Warranty: The pump manufacturer shall warrant the units being supplied to the owner against defects in workmanship and material for a period of five (5) years or 10,000 hours operation and service. The warranty shall be printed in form and apply to all similar units.

Local Pump Service Facility: At the time of bidding, there shall be a fully accredited service facility within 300 miles of the project site having factory trained technicians and a full stock of repair parts for a complete overhaul of the proposed pumps.

Experience: The pump manufacturer shall have a minimum of 200 units of similar type pumps, installed and operating for no less than five (5) years in the United States.

Site Tests: The pumps shall be tested at start-up. Voltage, current, and other significant parameters shall be recorded. The Manufacturer shall provide a formal test procedure and forms for recording data. See Vendor Data Schedule.

A Construction Component (CC) test of the lift station shall be performed to test for operability and function.

SUBMITTALS:

The Subcontractor shall supply Submittal Drawings, Operating and Maintenance Instruction Manuals and Parts Lists.

Standard submittals will consist of:

Pump Outline Drawing
Control Data

Access Frame
Typical Installation Guides
Technical Manuals
Parts List
Pump Controller Electrical Schematics
Shop Drawings
Construction Component (CC) Test Procedures

See Section 01300, Submittals and Vendor Data Schedule for additional submittal requirements.

PART 2--PRODUCTS

The pumps and electrical motors shall be a centrifugal, non-clog, submersible, solids handling, sewage pump as manufactured by Aurora/Hydromatic or approved equal. The pumps must be explosion proof. Each pump shall be equipped with a 7 ½ hp maximum, submersible electric motor connected for operation on a 460 volts, 3 phase, 60 hertz, 3 wire service, with 30 ft of UL Listed cord approved for submersible applications. The power cord shall be sized according to NEC and ICEA standards, and have MSHA Approval. The pump shall be supplied with a mating cast iron 6-in. discharge elbow and be capable of delivering 920 gpm at 14 ft TDH. Each unit shall be fitted with approximately 25-ft. of a Grip Eye System for use with portable cable hoist with adequate strength to permit raising and lowering the pump. A stainless steel cable shall be used in place of chains. The pump shall be capable of passing a 3-in. solid. The pumps shall be supplied with either an oil cooled or air-cooled motor. Pumps shall be Hydromatic S6AX, 10.25 in. impellar, 870 rpm, or approved equal.

The pumps shall be controlled by the use of Milltronics Hydroranger I ultrasonic fluid level sensing device or approved equal which will detect the level of the stormwater in the wet well and turn the pumps on or off, and control alarm signals. The Hydroranger I shall be programmed to alarm upon level out of range or loss of echo. The pumps shall alternate in pumping. At high levels, both pumps shall operate simultaneously.

Pump Design: The pumps shall be capable of handling raw, unscreened stormwater. The discharge connection elbow shall be permanently installed in the wet well along with the discharge piping. The pumps shall be automatically connected to the discharge connection elbow when lowered into place, and shall be easily removed for inspection or service. There shall be no need for personnel to enter pump well. Sealing of the pumping unit to the discharge connection elbow shall be accomplished by a simpler linear downward motion of the pump. A sliding guide bracket shall be an integral part of the pumping unit. The entire weight of the pumping unit shall be guided by no less than two (2) guide bars and pressed tightly against the discharge connection elbow with metal to metal contact. Pump service shall be available within a 300-mile radius of Idaho Falls, Idaho. Sealing of the discharge interface by means of a diaphragm, O-Ring, or other devices will not be acceptable. No

portion of the pump shall bear directly on the floor of the sump. The pump, with its appurtenances and cable, shall be capable of continuous submergence underwater without loss of watertight integrity to a depth of 65 ft.

PERFORMANCE CURVES:

In no case shall the required horsepower at any point on the performance curve exceed the horsepower of the motor when using any of the impellers available for use with the proposed pump. All centrifugal pumps shall have a continuously rising curve.

ADDITIONAL PUMP MOTOR CHARACTERISTICS:

For economy of sizing and operating auxiliary generator standby power, the pump motor shall have NEC locked-rotor code letter E. NEC code letters F and greater will not be acceptable.

ACCESS FRAME AND COVER:

Furnish and install one Bilco Access Frame and cover, Type J H-20, in aluminum material, rated for AASHTO H-20 wheel loading, complete with hinged and flush locking mechanism, and upper guide holder. The frame shall be securely placed, mounted above the pumps. The frame shall be provided with sliding nut rails to attach the accessories required. Lower guide bar holders shall be integral with the pump discharge connection. Guide bars shall be of at least standard weight galvanized steel pipe of the size specified by the products manufacturer. Doors shall be of skid proof design. All hardware which is used where it will be exposed in the wet well shall be stainless steel. The top of the covers shall be labeled "STORM DRAIN", and an identification tag labeled. Labels shall be installed or attached per Conduct of Operation Manual, Chapter XVIII, copy in Appendix B of this specification.

CONTROLS:

The installation of the controls system shall be performed and tested by a Manufacturer's Representative under the supervision and at the expense of the Subcontractor.

Furnish and install one duplex, 7 ½ HP, 3 phase, 460 V, Pump Control Panel in a gasketed NEMA 3R, dead front, door-in-door enclosure for mounting on framing channel. For each pump there shall be included: 480 V circuit breaker, starter, overload relays, Hand/Off/Auto switch, intrinsically safe pump controller with pump alternator, pump run light, and running time meter. The controller shall open an electrically operated drain valve upon pump shutdown and close the drain valve upon pump startup. The controller shall also have: a weatherproof, 100 W high level alarm light, audible alarm with silence pushbutton, and panel powered contact, an anticondensate heater and thermostat, a secondary lightning arrestor, a phase monitor relay, a common disconnect switch with a lever through the inner door for the

power breakers, receptacle, and a Milltronics Hydroranger I Ultrasonic Level Controller with a remote transducer and cable. The pump control Panel shall be U.L. Listed.

HDL BALL CHECK VALVE:

Furnish and install two Ball Check Valves. Manufacturer shall be FLYGT or GA Industries or equal. The valve shall consist of three components; body, cover and ball (one moving part). The design of the valve shall be such that it keeps solids, stringy material, grit, rags, etc., moving without the need for back flushing. In the operating mode, the ball shall not significantly impede flow through the valve, and shall be a full port valve able to provide an unobstructed flow path equal in cross sectional area to the 8 in. pipe. It shall be non-clog. There shall not be outside levers, weights, springs, dash pots or other accessories required for a swing (clapper) type check valve. The ball shall be hollow steel with an exterior or nitrile rubber, it shall be resistant to grease, petroleum products, animal and vegetable fats, diluted concentrations of acids and alkalines (pH 4-10), tearing and abrasion. The body and cover shall be of gray cast iron. Valves shall have flanged connections in accordance with AISI B16.1, Class 125.

DRAIN VALVE:

Furnish and install one ball valve with electric actuator. The ball valve shall be 1-1/2 inch with carbon steel body, chrome plated carbon steel ball and stem, screwed pipe ends and Buna seats and body seals. The electric actuator shall be sized for infrequent operation and dirty liquids. The electric actuator shall be powered by a reversing AC motor and shall have two internal, independently adjustable travel limit switches. The actuator shall have a permanently lubricated gear train and self-lubricated bearings. Upon valve failure, it shall "fail" closed. The actuator shall be housed in an enclosure that is both water-tight and Class I, Division 2, Group C and D rated. The actuator enclosure shall have thermostatically controlled heater. The manufacturer shall be Worcester Controls Series 44 Ball Valve or approved equal.

PART 3--EXECUTION

Stormwater lift station shall be installed in accordance with the manufacturer's recommendations. Backfill around lift station shall be "compacted backfill" in accordance with Section 02200 Earthwork.

Pipe and Equipment Identification Tags:

After installation, all pipelines, pumps and valves shall be identified by tagging with their line number or designation as shown on the drawings. The tag shall be fabricated from 24 gage, ¾ in. wide, 3-in. long, AISI Type 303 or 304 stainless steel metal strip with 3/16 in. high letters stamped in the metal surface. Tagging shall be done as shown on the drawings.

TRAINING:

The Subcontractor shall provide training on the operation and maintenance of the pumps and lift station for the Contractor's Stormwater Operators.

FIELD QUALITY CONTROL:

Surveillance of the installation will be performed by the Contractor's Representative to verify compliance of the work to the drawings and specifications.

END OF SECTION 15480

SECTION 15481—SUMP PUMP AND ACCESSORIES

PART 1--GENERAL

WORK DESCRIPTION:

Furnish and install 1 submersible sump pump, pump controller and totalizer; and all associated piping, conduit, wiring and ultrasonic level switches.

RELATED SECTIONS:

16000 Electrical General Provisions

QUALITY CONTROL:

Local Pump Service Facility: At the time of bidding, there shall be a fully accredited service facility within 300 miles of the project site having factory trained technicians and a full stock of repair parts for a complete overhaul of the proposed pump.

Experience: The pump manufacturer shall have a minimum of 200 units of similar type pumps, installed and operating for no less than five (5) years in the United States.

Site Tests: The pump shall be tested at start-up.

A Construction Component (CC) test of the sump pump shall be performed to test for operability and function. See Vendor Data Schedule.

SUBMITTALS:

The Subcontractor shall supply Submittal Drawings, Operating and Maintenance Instruction Manuals and Parts Lists.

Standard submittals will consist of:

- Pump Outline Drawing
- Control Data
- Access Frame
- Typical Installation Guides
- Technical Manuals
- Parts List
- Pump Controller Electrical Schematics
- Shop Drawings
- Construction Component (CC) Test Procedures

See Section 01300, Submittals and Vendor Data Schedule for additional submittal requirements.

PART 2--PRODUCTS

The pump and electrical motor shall be a submersible, solids handling, sump pump as manufactured by Ebara or approved equal. The pump shall be equipped with a ½ hp submersible electric motor for operation on a 115 volts, 1 phase, 60 hertz service, with UL Listed cord approved for submersible applications. The power cord shall be sized according to NEC and ICEA standards. The electric motor shall have internal overload protection with automatic reset. The pump shall be capable of delivering 35 gpm at 25 ft of head and passing a 3/8 in. solid. The pump discharge line shall be 1-1/2 FPT. The pump shall be an Ebara model 40P707U6.6S with extra long power cord or approved equal.

The pump controller shall use Gems ultrasonic level switches with the remote electronics option or approved equal to control the level of the water in the sump and initiate a high sump alarm.

Totalizer: The totalizer shall be capable of recording total flow and flow rates from 5gpm minimum to 50 gpm maximum within 2% accuracy. The totalizer shall have 1 in. NPT connections and shall be a direct mechanical readout. The totalizer shall be a SeaMetrics M-Series MT-1 or approved equal.

Polyethylene Pipe: The discharge line from the sump pump shall be 1-1/2 in. polyethylene tubing using mechanical joints to connect to the sump pump and above ground piping. The polyethylene pipe shall conform to the requirements of AWWA C901. The polyehtylene pipe shall be Driscopipe Ultra-line or approved equal.

PERFORMANCE CURVES:

In no case shall the required horsepower at any point on the performance curve exceed the horsepower of the motor when using any of the impellers available for use with the proposed pump.

CONTROLS:

The installation of the controls system shall be performed and tested by a Manufacturer's Representative under the supervision and at the expense of the Subcontractor.

Furnish and install one simplex, ½ HP, 1 phase, 115 V, Pump Control Panel in a gasketed NEMA 3R, dead front, door-in-door enclosure for mounting on framing channel. The controller shall include: 120 V circuit breaker, starter, Hand/Off/Auto switch, intrinsically safe pump controller, pump run light, and running time meter. The controller shall also have: a weatherproof 100 W high level alarm light, audible alarm with silence pushbutton, an

anticondensate heater and thermostat, a secondary lightning arrestor, a common disconnect switch with a lever through the inner door for the power breaker; and Gems ULS-10 Ultrasonic Level Switches with a remote electronics, sensors and manufacturer supplied coax cables. The Pump Control Panel shall be U.L. Listed.

PART 3--EXECUTION

The sump pump and accessories shall be installed in accordance with the manufacturer's recommendations.

Pipe and Equipment Identification Tags:

After installation, all pipelines and equipment shall be identified by tagging with their line number or designation as shown on the drawings. The tag shall be fabricated from 24 gage, ¾ in. wide, 3-in. long, AISI Type 303 or 304 stainless steel metal strip with 3/16 in. high letters stamped in the metal surface. Tagging shall be done as shown on the drawings.

FIELD QUALITY CONTROL:

Surveillance of the installation will be performed by the Contractor's Representative to verify compliance of the work to the drawings and specifications.

END OF SECTION 15481

SECTION 16000--ELECTRICAL GENERAL PROVISIONS

PART 1--GENERAL

SUMMARY:

The Subcontractor shall provide, install, terminate, and test all the systems as described in the specification and shown on the drawings to make complete and operational systems including but not limited to:

Removing a motor circuit protector and replacing it with a circuit breaker in motor control center MCC-OGF-1049 in CPP 1773.

Installing a lift pump control panel, manual transfer switch and a heavy duty power receptacle.

Installing the associated conduit, junction boxes, wiring and grounding.

RELATED SECTIONS:

02200	Earthwork (duct bank installation)
03300	Cast-In-Place Concrete
15480	Stormwater Lift Stations
15481	Sump Pump and Accessories

REFERENCES:

The following documents, including others referenced therein, form part of all 16000 series sections to the extent designated. Unless otherwise indicated, use the latest edition in effect as of the date of these specifications.

AMERICAN NATIONAL STANDARDS INSTITUTE (ANSI)

ANSI C-2 National Electrical Safety Code (NESC)

NATIONAL FIRE PROTECTION ASSOCIATION (NFPA)

NFPA-70 National Electrical Code (NEC)

CODE OF FEDERAL REGULATIONS (CFR)

29 CFR 1910 Subpart S OSHA Electrical Safety

FACTORY MUTUAL (FM)

CANADIAN STANDARDS ASSOCIATION (CSA)

NATIONAL RECOGNIZED TESTING LABORATORIES (NRTL)

NATIONAL ELECTRICAL MANUFACTURERS ASSOCIATION (NEMA)

UNDERWRITERS' LABORATORIES, INC. (UL)

UL 486A Wire Connectors and Soldering Lugs for Use with Copper Conductors.

Underwriters Laboratories (UL): All materials, appliances, equipment or devices shall conform to the applicable standards of Underwriters Laboratories, Inc. All material, appliances, equipment or devices shall be listed and/or labeled by UL.

SUBMITTALS:

Test Reports and Procedures: Submit test procedures and reports for a construction component test (CC) of all equipment for controls and devices installed or modified by the Subcontractor. Prior to testing all procedures shall be submitted for Contractor approval.

See Section 01300, Submittals and Vendor Data Schedule for additional submittal requirements.

PART 2--PRODUCTS

Furnish all labor, materials, equipment and appliances required to complete the installation of the complete electrical systems. The completed electrical system shall conform with applicable provisions of the specifications and the subcontract drawings. All labor, materials, service, equipment, and workmanship shall conform to the applicable referenced standards and regulations.

MANUFACTURERS:

Where multiple units of a product are required, provide identical products by the same manufacturer without variations except for sizes and similar variations as indicated.

MATERIALS:

Except as otherwise indicated, furnish new electrical products, free of defects and harmful deterioration at the time of installation. Provide each product complete with trim, accessories, finish, guards, safety devices and similar components specified or recognized as integral parts of the product, or required by governing regulations.

Unless otherwise indicated by the drawings or specifications or approved in writing, the materials and/or equipment furnished under these specifications shall be the standard products of manufacturers regularly engaged in the production of such equipment, and shall be the manufacturer's standard design.

Environmental Conditions:

All installations and equipment shall be required to operate normally under the following climatic and geographic site conditions

Site Elevation.....4,917 feet
Barometric Pressure.....12.27 psia
Relative Humidity.....90% max. at 30°F dry bulb
15% min. at 60°F dry bulb
Uniform Building Code.....Seismic Zone 2B
Temperature.....+40°C max.
-40°C min.

NEMA 3R enclosures will be provided for all outdoor equipment and NEMA 1 for all indoor equipment unless noted otherwise on drawings.

Labeling: See Section 16195 -Electrical Identification for labeling requirements.

PART 3--EXECUTION

SEQUENCING/SCHEDULING:

General: It is recognized that the subcontract documents are diagrammatic in showing certain physical relationships which must be established within the electrical work and in its interface with other work, including utilities and mechanical work, and that such establishment is the exclusive responsibility of the Subcontractor. Subcontractor shall arrange electrical work in a neat, well-organized manner with conduit and similar services running parallel with the primary lines of the building construction.

Subcontractor shall locate operating and control equipment properly to provide easy access, and working clearance in accordance with the NEC. Subcontractor shall advise other trades of openings or clearances required in their work for the subsequent move-in and assembly of large units of electrical equipment.

QUALITY CONTROL:

Subcontractor Supplied Testing: Upon completing installation of all systems and equipment, but prior to project close out, the Subcontractor shall conduct a construction component test (CC) of all equipment for controls and devices installed or modified by

the Subcontractor. As a minimum, all of the manufacturers' recommended pre-startup tests and measurements shall be performed as well as other CC tests required by these specifications. Prior to testing all procedures shall be submitted for Contractor approval. All equipment shall test satisfactory or be repaired or replaced at no additional cost to the Contractor.

As part of the Construction Component (CC) Tests, all electrical connections and mounting fasteners shall be tightened to torque specifications stated by the equipment manufacturer. If manufacturer has no recommended torque value tighten as per UL 486A.

The Subcontractor shall test all devices in the presence of the Contractor's Representative. Subcontractor shall coordinate testing with the Contractor.

Contractor Inspection: Surveillance will be performed by the Contractor's Representative to verify compliance of the work to the drawings and specifications.

END OF SECTION 16000

SECTION 16109--SWITCHES, RECEPTACLES AND WALL PLATES

PART 1--GENERAL

SUMMARY:

Subcontractor shall provide and install receptacles of sizes, ratings, materials and types as shown on the drawings. Work includes installation of new devices as detailed on contract drawings.

SUBMITTALS:

No Vendor Data required for this section unless an "or equal" item is submitted for review.

RELATED SECTIONS:

16000	Electrical General Provisions
16110	Electrical Raceways
16120	Cable, Wire, Connectors and Miscellaneous
16195	Electrical Identification
16450	Grounding

PART 2--PRODUCTS

MATERIALS:

Weld Receptacles: Provide 480 Vac 60 Hz 3 phase, 4 wire welding receptacle assemblies where shown on drawings. Receptacles shall be heavy duty, circuit breaking Crouse-Hinds Model AREA10425 or approved equal.

PART 3--EXECUTION

INSTALLATION:

Install receptacles where indicated on the drawings in accordance with recognized industry installation practices.

LABELING:

Label all covers and plates. Install labels per Section 16195 for Electrical Identification.

FIELD QUALITY CONTROL:

Site Tests: The Subcontractor or his agents shall perform the following:

Visual inspection to determine that equipment installation conforms to NEC, these specifications and the drawings.

Subsequent to hooking-up cables/wires and devices, energize circuitry and demonstrate functioning in accordance with requirements.

Contractor Inspection: Surveillance will be performed by the Contractor's Representative to verify compliance of the work to the drawings and specifications.

END OF SECTION 16109

SECTION 16110--ELECTRICAL RACEWAYS

PART 1--GENERAL

SUMMARY:

Section Includes: Work includes, but is not limited to:

Subcontractor shall provide and install electrical raceways of types, grades, and sizes as shown on the drawings. Provide complete assembly of raceway including, but not necessarily limited to, couplings, elbows, adapters, hold-down straps, and other components and accessories as needed for a complete system.

Coordinate with other work as necessary to interface installation of electrical raceways and components with other work.

RELATED SECTIONS:

02200	Earthwork
03300	Cast-In-Place Concrete
15480	Stormwater Lift Stations
15481	Sump Pump and Accessories
16000	Electrical General Provisions
16195	Electrical Identification

REFERENCES:

The following documents, including others referenced therein, form part of this specification section to the extent designated. Unless otherwise indicated, use the latest edition in effect as of the date of these specifications. See the list of general references in Section 16000.

SUBMITTALS:

No Vendor Data required for this section unless an "or equal" item is submitted for review.

PART 2--PRODUCTS

MATERIALS:

Conduit and Fittings: Rigid Galvanized Steel (RGS) conduit or Intermediate Metal Conduit (IMC) shall be used for all conductors where buried in earth, in masonry, in

concrete, and in damp or wet locations. All conduits shall be UL approved, 3/4-in. minimum unless shown otherwise on the drawings.

Polyvinyl chloride (PVC) conduit that is encased in concrete shall be type EB (Encased Burial). All underground bends of 30 degrees or more shall be rigid galvanized steel conduit.

Electrical metallic tubing (EMT) shall be installed in all areas except those stipulated for rigid conduit or IMC. EMT shall be UL approved, standard weight, electro-galvanized steel.

Liquid-tight, flexible conduit shall be installed in wet locations. Liquid-tight flex shall be grounding-type with a PVC jacket.

Conduit fittings for rigid conduit (RGS or IMC) shall be rust-resistant cast steel.

Conduit fittings for EMT shall be steel, rain-tight compression type.

Junction Boxes: Junction boxes in the catch basin shall be watertight rust-resistant cast steel approved for installation in Class I, Group C and D atmospheres. Junction boxes in the 12 in. PVC sump pump pipe shall be weatherproof rust-resistant cast steel. Other junction boxes shall be galvanized.

Locator Ribbon: Locator ribbon shall be installed approximately 6 in. above buried conduit and ductbanks. See Section 02200 for buried pipe identification ribbon requirements.

Framing Channel for Conduit/Box Support: Where indicated on the drawings or as required by the NEC, bolted framing channel shall be used to support conduits and electrical boxes. Galvanized Steel channel shall be used in all outdoor/exterior locations and epoxy painted channel in all interior locations. The minimum size bolt used for bolt framing channel together for a support structure shall be 3/8". The exposed ends of all framing channels shall have a protective cap installed. Sizes shall be as detailed on the drawings. All framing channels shall be made of channel, fittings, and hardware as defined in MFMA-1 and shall be minimum 14-gauge steel. Framing channel shall be as manufactured B-Line Systems or approved equal.

PART 3--EXECUTION

INSTALLATION: Install conduit, tubing and duct products as indicated on the drawings in accordance with manufacturer's written instructions, applicable requirements of NEC and National Electrical Contractors Association's "Standard of Installation," and complying with recognized industry practices to ensure that products serve intended functions.

All conduit joints shall be cut square, threaded, reamed smooth, and drawn up wrench tight. Bends or offsets shall be made with standard conduit bending dies that will not injure or flatten the pipe.
Rigid conduit terminating at cabinets and boxes shall be rigidly secured with locknuts inside and outside.

Male threads on exterior runs of galvanized steel conduits shall be thoroughly coated with a conducting sealing media such as petroleum base products. No red lead shall be used on any conduit joint.

All conduit penetrations through building walls, fire walls, or floors shall be sealed around outside of conduits with sealant appropriate for wall material (i.e., grout for concrete walls, fire stop caulk for drywall, etc.).

CONDUIT IDENTIFICATION:

Label conduits per Section 16195--Electrical Identification.

UNDERGROUND DUCTS:

All underground ducts shall be installed in locations shown on drawings, enclosed in a red concrete casing. The concrete casing shall also enclose all standard conduit bends or elbows. All underground ducts shall have rebar reinforcement in sizes as shown on the drawings.

Excavate the trenches to provide elevation on top of concrete envelope as shown on drawings. After trenches are excavated and graded, the duct shall be laid in rows on plastic spacers or approved equals.

Spacers shall be so placed that each section of duct is supported at intervals as specified in NFPA 70 (NEC). Concrete shall then be poured until the ducts are covered to the required depth and leveled leaving not less than 3 in. of concrete over top tier of ducts.

FIELD QUALITY CONTROL TESTING:

Site Tests: The Subcontractor or his agents shall perform visual inspections to determine that equipment installation conforms to the NEC, these specifications, and the drawings.

Contractor Inspection: Surveillance will be performed by the Contractor's Representative to verify compliance of the work with the drawings and specifications.

END OF SECTION 16110

SECTION 16120--CABLE, WIRE, CONNECTORS AND MISCELLANEOUS DEVICES

PART 1--GENERAL

SUMMARY: The Subcontractor shall furnish, install, and terminate all cables conductors, and devices to make complete and operational systems.

Section Includes: Work includes, but is not limited to wiring for:

Power and control systems.

Subcontractor shall provide, install, and terminate cables, cords, and wiring connectors of sizes, ratings, materials and types as shown on the drawings or described in related sections.

Related Sections: See other related sections for specific cables, wire, labels, and testing requirements.

16000	Electrical General Provisions
16110	Electrical Raceways
16195	Electrical Identifications

REFERENCES:

The following documents, including others referenced therein, form part of this specification section to the extent designated. Unless otherwise indicated, use the latest edition in effect as of the date of these specifications.

NATIONAL ELECTRICAL CABLE ASSOCIATION (NECA)

Standard for Installation Practices

UNDERWRITERS LABORATORIES, INC. (UL)

UL 1581 Electrical Wires, Cables, and Flexible Cords

SUBMITTALS:

Test Reports: Submit test reports for end to end continuity tests and megger tests of all 480 V wiring and all cables or wires No. 8 and larger prior to terminating.

See Section 01300, Submittals and Vendor Data Schedule for additional submittal requirements.

PART 2--PRODUCTS

WIRING MATERIALS, 600 V:

Conductors shall be stranded for all sizes of wire and cable larger than 10 AWG.

Conductors shall be copper for all sizes.

Wire insulation shall be Type THHN/THWN or XHHW for all 600 V conductors unless otherwise noted. Minimum size of power conductors shall be No. 12.

Wiring shall be color-coded as indicated below:

	Conductor Color Code		
Conductor	208/120 Volts*	480/277 Volts*	240/120 Volts*
Phase A	Black	Yellow	Black
Phase B	Red	Orange	Red
Phase C	Blue	Brown	
Neutral	White	Gray	White
Ground	Green	Green	Green

* For conductors larger than #10 AWG not generally furnished with colored insulation, identification shall be achieved by the use of plastic tape or sleeves of the appropriate color. Yellow phase tape shall consist of two separate bands at each application point in order to avoid confusion with white, gray, or orange after aging. All wire markers and phase tape shall be covered by clear heat shrink sleeving.

Wire #10 AWG and smaller shall be furnished with continuous colored insulation for all power, neutral and ground conductors when multiple circuits are installed to identify the phase connected to, neutral, or equipment ground wiring. Bare copper conductors shall only be used for ground conductors as shown on the drawings.

SPLICES:

Splices for underground (cathodic, grounding and power) cabling shall be UL listed and labeled and be of the material type and design appropriate for the conductors and application involved. Scotchcast splice kits shall be used for cathodic protection cable splices.

All splices shall be visually inspected for material type, proper installation and damage by the Contractor's Representative.

Splices shall be installed by qualified craftsmen that routinely perform this task as part of their regularly assigned duties.

CONNECTORS:

Connectors shall only be used as specified by manufacturer.

Spring type pressure connectors such as "Scotchlock," shall be used for splicing No. 8 AWG and smaller.

Splitbolt and/or lug type connectors such as "Burndy" shall be used for splicing No. 6 AWG and larger.

Scotch mastic pads (or approved equal) and two layers of half wrapped electrical tape shall be installed over all splitbolt connectors.

Crimp on ring tongue lug connectors such as "Stakon," shall be used for connection to terminal boards.

Wire/Device Identification: See Section 16195 Electrical Identification.

WIRING MATERIALS, SIGNAL CABLES:

The ultrasonic transducer extension cable shall be RG-62/U Type Belden 82269 or approved equal.

PART 3--EXECUTION

INSTALLATION:

General: Install electrical cable, wire and connectors as indicated on the drawings, in accordance with manufacturer's written instructions, applicable requirements of NEC and NECA's "Standard of Installation," and in accordance with recognized industry practices to ensure products serve intended functions. All connections shall be tightened to the manufacturers published torque values. Where manufacturer does not specify torque requirement, connections shall be torqued to values specified in UL 486A.

Coordinate cable and wire installation work with electrical raceway and equipment installation work, as necessary for proper interface.

Pull conductors together where more than one is being installed in a raceway. Do not exceed the conductor manufacturer's recommended pulling tension.

Use pulling compound or lubricant, where necessary; compound must not deteriorate conductor or insulation.

Use pulling means including fish tape, cable, or rope which cannot damage raceway.

Install splices and taps which have mechanical strength and insulation rating equivalent-or-better than conductor.

Use splice and tap connectors which are compatible with conductor material.

FIELD QUALITY CONTROL:

Subcontractor Supplied Testing:

Meggering: Megger test all 480 V wiring and all cables or wires No. 8 and larger prior to terminating. Test wire or cable insulation resistance with megger (500 V megger for 300 V insulation and 1000 V megger for 600 V insulation). Any wire with less than 10 megohms to ground or other conductors shall be replaced before proceeding with the terminating. List conductors tested on Subcontractor furnished test data submittal sheet. An alternate megger test voltage can be used as recommended by the manufacturer for the specific cable or wiring. Check phase rotation of all three-phase circuits.

The Subcontractor shall perform an end to end continuity test on each conductor installed and submit test results to the Contractor for review.

Contractor Inspection: Surveillance will be performed by the Contractor's Representative to verify compliance of the work to the drawings and specifications.

The Contractors representative will witness the installation of any cables installed via approved "pull by" method.

Wires and cables will be checked for proper termination and termination tightness.

END OF SECTION 16120

SECTION 16195--ELECTRICAL IDENTIFICATION

PART 1--GENERAL

SUMMARY:

Section Includes: Work includes, but is not limited to:

The Subcontractor shall provide and install labels and identification as specified herein, on the drawings, and in the appendices. See electrical drawings for equipment and wiring identifiers.

Install labels on all electrical and related equipment including wires, cables, J-Boxes, switches, receptacles, panels, disconnects, MCC's, PCC's, and Load Centers. Label all major and subfed breakers for all MCC's, PCC's, load centers, and substation.

RELATED SECTIONS:

16000	Electrical General Provisions
16110	Electrical Raceways
16120	Cable, Wires, Connectors and Miscellaneous Devices
16370	Manual Transfer Switches, 600V and Less

SUBMITTALS:

No Vendor Data is required for this section.

PART 2--PRODUCTS

MATERIALS:

Adhesive Marking Labels for all Raceway and Metal-Clad Cable: Pre-printed flexible, self-adhesive labels with legend, identifying system type or voltage and phase.

Wire and Cable Designation Tape Markers: Self-adhering, oil and moisture resistant, vinyl labels covered with clear heat shrink tubing. Letters shall be typed on in black, non-smear ink. Hand lettered labels shall not be used. Engraved identification tags may also be used.

Brass, Steel, or Aluminum Tags for Valves: Metal tags with stamped legend, punched for fastener. Dimensions: minimum 2" x 2" x 19 gauge with 1/4 in. radius corners and 3/16 in. hole for fastener.

Brass and Steel Labels: 0.31 to 0.50 in. thick with 1/4 in. radius corners, 3/16 in. holes in corners, and black engraving.

Engraved, Plastic-Laminated Labels, Tags, Signs, and Instruction Plates: Engraving stock melamine plastic laminate, 1/16 in. minimum thick for signs up to 20 sq. in., or 8 in. in length; 1/8 in. thick for larger sizes. Engraved legend and punched for mechanical fasteners.

Exterior Metal-Backed Butyrate Warning and Caution Signs: Weather-resistant, non-fading, pre-printed cellulose acetate, butyrate signs with 20 gauge, galvanized steel backing, with colors, legend, and size appropriate to the location. Provide 1/4-in. grommets in corners for mounting.

Fasteners for Plastic-Laminated and Metal Signs: Self-tapping stainless steel screws or number 6/32 galvanized steel machine screws with nuts, flat washers, and lock washers. All signs and labels shall be glued into place using clear GE Silicone II adhesive. Duplex receptacles and light switch labels shall be glued on only. All labels larger than 1" high x 2" long shall be glued and screwed on.

Cloth, Polyethylene, Nomex, or Vinyl Tags: Installed inside 120V outlet boxes shall be white color, sized a minimum of 1" x 3", and shall have hand written or typed labeling using permanent marker.

PART 3--EXECUTION

INSTALLATION:

Install Equipment/System Circuit/Device Identification as follows:

This includes low voltage power distribution, signal, and control systems. Text shall match terminology and numbering of the Contract Documents and shop drawings. Apply equipment identification labels of engraved plastic-laminate on all electrical equipment including the central or master unit of each electrical system and each sub breaker or controller. The labels shall be glued with clear silicone adhesive or screwed on with #6/32 galvanized steel machine screws with nuts.

Apply labels for each unit of the following categories of electrical work:

- MCC Cubicles.
- Pump controllers
- Components, wires and cables
- Manual transfer switches
- Receptacles

Apply circuit/control/item designation labels of engraved plastic laminate.

Install labels at locations indicated and at locations for best convenience of viewing without interference with operations and maintenance of equipment.

IDENTIFICATION AND LABELING OF ELECTRICAL EQUIPMENT:

Background and legend colors for electrical equipment labels shall be as specified in Table I. List is not intended to be all inclusive and Subcontractor shall be responsible to insure that all new, relocated or refed equipment is labeled meeting the requirements contained within this specification.

Table I. Electrical Equipment Label Colors

Power System Classification	Power System Designator	Background Color	Legend Color
Normal	N	black	white
Standby	S	yellow	black
Emergency	E	red	white
Direct current	DC	black	white

Electrical equipment label and lettering size shall be as specified in Table II. If equipment size constraints make the specified label size impractical, the label and lettering size will be large as possible for that particular equipment application.

Table II. Electrical Equipment Label Sizes

Power Equipment Classification	Label Height (minimum)	Lettering Height First Line	Lettering Height Subsequent Lines
Primary Distribution Equipment	2 1/2 inch	3/4 inch	3/8 inch
Secondary Power Distribution Switches	1 inch	3/8 inch	1/4 inch
Disconnect Switches	1 inch	3/8 inch	1/4 inch
Power Distribution Panels	1 inch	1/2 inch	1/4 inch
Power Distribution Transformers	2 inch	1/2 inch	1/4 inch
PCC/MCC Switchgear Switchboards	2 inch	3/4 inch	3/8 inch

Power Receptacles	3/8 inch	3/16 inch	3/16 inch

Electrical power distribution equipment labels shall include the following as applicable:

1. The properly assigned identifier (as shown on drawings)

2. The noun name or function description.

3. The voltage and the number of phases.

4. The power source (fed from) equipment identifier, the circuit number (if applicable), and building in which power source is located if different from equipment location.

5. In addition to the above 4 items, transformers, UPS, substation switchgear, load center switchgear, service entrance equipment cubicles, and disconnect switch labels shall contain the destination (fed to) power equipment identifier fed by the transformer secondary or disconnect switch.

Example Panel Labels:

SLP-MA-447
LIGHTING PANEL, 408/277V, 3 PHASE
FED FROM: PANEL PCC-MA-448A CKT 9

PCC-CW-419
POWER PANEL, 208/120V, 3 PHASE
FED FROM: TRANSFORMER XFR-CW-187

Example Transformer Label:

XFR-CW-187
TRANSFORMER
FED FROM: LC-MA-0350 CKT 55
FEEDS: PANEL PCC-CW-419

Example Disconnect Label:

DSW-UTI-4500
DISCONNECT SWITCH
FED FROM: LP-MA-447 CKT 9
FEEDS: BLO-UTI-4500

Labels are to be made from materials that are compatible with the application. Brass or stainless steel shall be used where shown on the drawings.

The equipment label(s) shall be located on the front of electrical equipment in as visible a location as possible.

Separate labels shall be utilized for the identification of cautions or dangers required by code and as designated on the drawings.

IDENTIFICATION AND LABELING OF CIRCUITS, CABLES, AND WIRE:

Each individual circuit breaker in a panelboard shall be clearly identified by a circuit number appropriate to the individual panelboard. All circuits, breakers, or spaces that are spare, blank, or utilized for power distribution shall be properly identified on the panel legend provided by the Subcontractor or manufacturer. The method of identification shall be as follows:

Panelboard Breakers: Single and multiple pole breakers shall be numbered as shown on the drawings and schedules. A type written circuit directory shall be installed in each panel and a copy furnished to the Contractor.

Switchgear Cubicles: Label individual switchgear cubicles/cells as shown on the drawings and schedules.

Conductors: All conductor identification shall include the panel identifier and the circuit identification number from the panel and the voltage.

Example Conductor Label: A conductor from SLP-MA-447, circuit No. 4, @ 120V would be identified with the identification number SLP-MA-447 ckt 4, 120V.

Conductors to 120V light switches and 120V duplex receptacles do not need to be labeled if continuous wire color code is utilized. All 277/480V circuit shall be labeled.

Each conductor or cable shall also be clearly identified and labeled in all electrical pull boxes or junction boxes. Engraved, laminated plastic identification tags are acceptable for this purpose when attached to each conductor or to the box collar.

Control Wiring: All control wires shall be labeled with "from" and "to" identification at each termination point. The "from" location will be first and be separated from the "to" location by the use of a slash (i.e. TB1-2/TB6-5).

All exposed cables (not in conduit) used for power distribution or instrumentation shall be labeled with the assigned identification number no less than every 100 ft for the total length of the cable. Individual conductors used for overhead power distribution shall be labeled at each termination point.

Below Grade Power Circuit Identification: Securely fasten identifying tags to cables, feeders, and power circuits in vaults, pull boxes, and junction boxes. Tags shall have engraved legend to correspond with designations in specifications and on drawings. Attach tags with approximately 55-lb. test monofilament line or one-piece self-locking

nylon cable ties. Tag cables at each entry and exit of the manhole or once in a pull box or J-Box.

Conductor Color Coding: Provide color coding for secondary service, feeder, and branch circuit conductors throughout the project secondary electrical system as specified in Section 16120.

Sequence of Work: Where identification is to be applied to surfaces that require finish, install identification after completion of finish work.

CONDUIT LABELS:

Conduits shall be identified by a label attached parallel or encircling the conduit with a legend of the conductor characteristics including: highest voltage level contained within the conduit, AC or DC current, number of phases, and service type (FA for Fire Alarm, ENS for Emergency Notification, VP for Voice Paging, EVAC for Evacuation), if applicable.
Example Conduit Label: 120V, AC, 1 Ph, FA.

Conduit labels shall be color-coded as specified in Table III:

Table III: Conduit Label Colors

Power Type	Background Color	Lettering Color
Normal Power	Orange	Black
Standby Power	Yellow	Black
Emergency Power	White	Red

Labeling Size and Placement: The minimum letter height of content and identification labels of raceways and conduit shall be as specified in Table IV below. A letter size of at least one half the trade diameter is recommended for conduit. The label shall be as long as required to display the specified information.

Table IV. Conduit Label Sizes

Raceway or Conduit Size (inches)	Minimum Height of Lettering (inches)
3/4 to 1 ¼	½
1 1/2 to 2	¾
2 1/2 to 6	1 ¼
8 to 10	2 ½
Over 10	3 ½

Note: The size refers to the nominal diameter for conduit or the width of the raceway or cable tray.

Exposed raceways and conduits shall be labeled within 3 ft of the power source and adjacent to process equipment; adjacent to each side of any penetration through floors, walls, or bulkheads. Labels shall be placed at intervals not to exceed 20 ft on straight runs of conduit. Raceways and conduit shall be labeled at least once in each room through which they pass. Labels shall be located to facilitate ease of identification. Conduction ceiling space above suspended ceilings shall be labeled.

WARNING, CAUTION, AND INSTRUCTION SIGNS:

Identify Junction and Connection Boxes: Code-required caution sign for boxes shall be pressure-sensitive, self-adhesive label indicating system voltage in black, pre-printed on orange background. Install on outside of box cover. Use pressure-sensitive plastic labels at exposed locations and similar labels or tags at concealed boxes.

Apply warning, caution, and instruction signs and stencils as follows:

Install warning, caution, and instruction signs where required by NEC, where indicated on the drawings, and where required to assure safe operations and maintenance of electrical systems and of the items to which they connect. Install engraved plastic-laminated instruction signs with instructions or explanations needed for system or equipment operation. Install butyrate signs with metal backing for outdoor items.

FIELD QUALITY CONTROL:

Contractor Inspection: Surveillance will be performed by the Contractor's Representative to verify compliance of the work to the drawings and specifications.

END OF SECTION 16195

SECTION 16370--MANUAL TRANSFER SWITCHES 600 V AND LESS

PART 1--GENERAL

SUMMARY:

Section Includes: Work includes, but is not limited to:

The Subcontractor shall provide and install manual transfer switches of types, grades, and sizes as shown on the drawings. Provide complete assembly including, but not necessarily limited to hubs and other components and accessories as needed for a complete system.

RELATED SECTIONS:

16000	Electrical General Provisions
16110	Electrical Raceways
16195	Electrical Identification

SUBMITTALS:

No Vendor Data required for this section unless an "or equal" item is submitted for review.

PART 2--PRODUCTS

MANUFACTURERS:

Acceptable Manufacturers: Square D, General Electric, and Cutler-Hammer or approved equal.

MATERIALS:

Manual Transfer Switches: Manual transfer switches shall be UL listed, NEMA 3R type or as shown on drawing, heavy duty, non-fused, and have current and voltage rating as shown on the drawings. Switches shall be operated with external operating handle that is an integral part of the box and not the cover. The operating mechanism shall be quick-make, quick-break and shall not be capable of being restrained by the operating handle during the opening and closing operation.

Dual interlocks shall interlock the switch box cover with the switch mechanism and shall prevent opening or closing the box cover when the switch contacts are closed and the switch mechanism is in the "ON" position. An interlock release shall be provided to defeat the interlocking mechanism and to permit opening the box cover when the switch

contacts are closed. To defeat the interlock release and permit opening the box cover shall require an external hand tool.

Switch handles shall be designed for padlocking in the "OFF" position, locking the door closed to inhibit access to the switch. All current-carrying metal parts of the switch shall be enclosed.

PART 3--EXECUTION

INSTALLATION:

Install manual transfer switches as indicated on the drawings and in accordance with manufacturer's written instructions, applicable requirements of NEC and National Electrical Contractors Association's "Standard of Installation," and comply with recognized industry practices to ensure that products serve intended functions.

LABELING:

See Section 16195--Electrical Identification.

FIELD QUALITY CONTROL:

Site Tests: Visual inspection to determine that equipment installation conforms to NEC, these specifications and the drawings.

Contractor Inspection: Surveillance will be performed by the Contractor's Representative to verify compliance of the work to the drawings and specifications.

END OF SECTION 16370

SECTION 16450--GROUNDING

PART 1--GENERAL

SUMMARY:

Section Includes: Work includes, but is not limited to: Subcontractor shall provide and install grounding of sizes, ratings, materials and types as shown on the drawings and as recommended by the NEC and the NESC.

RELATED SECTIONS:

15480	Stormwater Lift Stations
16000	Electrical General Provisions
16110	Electrical Raceways
16370	Manual Transfer Switches, 600 Volts and Less

SUBMITTALS:

No Vendor Data required for this section unless an "or equal" item is submitted for review.

PART 2--PRODUCTS

MATERIALS:

Equipment grounding conductors shall be green insulated (#6 AWG and Smaller) or bare copper, sized and located as shown on the drawings.

Grounding rods shall be a minimum of 5/8-in. diameter and 10 ft long copper clad steel.

Grounding connections below grade shall be made by the exothermic welding process. Exothermic welds shall be Cadweld or approved equal.

PART 3--EXECUTION

INSTALLATION:

Install a complete grounding system as indicated on the drawings in accordance with applicable requirements of the NEC, the NESC, and complying with recognized industry practices to ensure that products serve intended functions and comply with requirements.

All exposed noncurrent-carrying metallic parts of the lift station, electrical equipment and raceway systems shall be grounded.

All conduit (except spares) shall contain a dedicated grounding conductor. Connect the conduit grounding bushing with a base ground conductor to the ground bus/conductor in the equipment where the conduit terminates.

Conduit shall not be used as the grounding conductor.

Grounding Rods: Grounding rods shall be driven as shown on the drawings. The grounding rods shall be driven so that the top of the rod is 1 ft below finished grade.

Exothermic Welds: Exothermic welds shall be made in accordance with the manufacturer's written recommendations.

FIELD QUALITY CONTROL:

Site Tests: The Subcontractor or his agents shall perform visual inspections to determine that the grounding installation conforms to the NEC, these specifications, and the drawings.

Contractor Inspection: Surveillance will be performed by the Contractor's Representative to verify compliance of the work to the drawings and specifications.

END OF SECTION 16450

VENDOR DATA SCHEDULE

Project Title: OU 3-13 Group 1 Tank Farm Interim Action Subcontract No.: TBD

Prepared By: K. D. Fritz Date: 8/01/00 Rev.: 0

VENDOR DATA CODES

A. As-Built Drawings
B. Assembly Drawings
C. Attendance Record
D. Blasting Plan
E. Catalog Data
F. Chem & Physical Analysis
G. Concrete Mix Design
H. Control System Diagram
I. Design Calculations
J. Installation Instructions
K. Manufacturer's Data Report
L. O & M Manual
M. Parts List
N. Piping Drawing
O. Procedure/Instructions
P. Pump Head Curves
Q. Qualification/Resume
R. Quality Program
S. Red-line Drawings
T. RSMI & Maintenance Log
U. Sample (Color, Texture, etc.)
V. Shop Drawings
W. Survey Records
X. Test Procedure
Y. Test Report
Z. UL/FM Listing
AA. Warranty/Guarantee
AB. Weld Record Package
AC. Wiring Diagrams
AD. MSDS
AE. Hardware Schedule
AF. Hazardous Materials
AG. Logbook
AH. Pipe Certification

WHEN TO SUBMIT

AC - As Completed
AT - After Test
BC - Before Contract Awarded
BFA - Before Final Acceptance
BFR - Before Fabrication Release
PDS - Prior to Delivery on Site
PTP - Prior to Purchase
PS - Prior to Shipment
PT - Prior to Test
PTC - Prior to Construction Start
PTI - Prior to Installation
PTW - Prior to Welding
WP - With Proposal
WS - With Shipment

Item No.	Drawing Or Spec. Ref.	Description	VD Code/ Copies	When To Submit	Approval Code 1. App. 2. Info.	Reviewer	Receipt Insp.*
1	PRD-2101	MSDS/CHEMICAL INVENTORY LIST (INITIAL)	AD/4,AF/4	PDS	1	ES&H	
2	PRD-2101	SARA INVENTORY	AF/4	PDS	1	EA,ES&H	
3	SC-3	INSTRUMENTATION MANUALS	L/4	PT	2	CM,STR	
4	01051	LAND SURVEYOR REGISTERED PROFESSIONAL CERTIFICATION	Q/4	BC	2	CM,QE	
5	01051	COPY OF SURVEYOR'S LOGBOOK	AG/4	BFA	2	CM,AE	
6	01300	REDLINE DRAWINGS (CONSTRUCTION DRAWINGS)	S/6	BFA	2	CM,STR	
7	02430	PIPE CERTIFICATION (CULVERTS)	AH/4	PTI	2	CM,STR,QE	
8	02430	TRENCH DRAIN PRODUCT DATA	E/4	PTI	2	CM	
9	02444	FENCING PRODUCT DATA	E/4	PTI	2	CM	
10	02444	FENCE INSTALLATION INSTRUCTIONS	J/4	PTI	2	CM	
11	02514	MIX DESIGN OF A COMMERCIAL ASPHALT CONCRETE MIX	G/6	PTI	1	CM,AE,QE	
12	02598	POND LINER QUALITY CONTROL PLAN	R/6	PTI	1	CM,QE	
13	02598	POND LINER INSTALLATION & SHOP DRAWINGS	V/6	PTI	1	CM,AE,STR	
14	02598	POND LINER CERTIFICATIONS	Q/4	WP	2	CM,QE	
15	02598	AS-BUILT DRAWINGS - POND LINERS	A/6	BFA	1	CM,AE,STR	
16	02598	TEST PROCEDURES FOR LINER FABRICATION & SEAM INSPECTION	X/6	PT	1	CM,QE	
17	02598	TEST REPORTS FOR LINER FABRICATION & SEAM INSPECTION	Y/6	AT	2	CM,QE	
18	02598	POND LINER PERSONNEL QUALIFICATIONS & EXPERIENCE	Q/6	BC	2	CM,AE	
19	02598	SHOP DRAWINGS FOR POND BALAST, SAFETY LADDERS, CONCRETE APRON DETAILS	V/6	PTI	1	CM,AE,ES&H, STR	
20	02598	POND LINER WARRANTY	AA/4	BFA	2	CM,QE	
21	02598	FACTORY SEAM STRENGTH AND PEAL ADHESION TEST REPORTS	Y/4	AT	2	QE,CM	
22	03301	CONCRETE MIX DESIGN FOR EACH GRADE USED	G/4	PTP	1	CM,AE,QE	
23	03400	PRECAST CONCRETE SHOP DRAWINGS	V/4	PTP	1	AE,STR,CM	
24	03400	WELDER QUALIFICATIONS	Q/4	BFR	1	CM,QE	
25	09810	POLYUREA QUALITY CONTROL PLAN	R/6	PTI	1	ES&H,CM,QE	
26	09810	POLYUREA MATERIAL DATA	K/6	PTI	2	CM	
27	09810	POLYUREA COATING CERTIFICATION	Q/4	WP	1	CM,QE	

Instructions:
1. Refer to General Provisions, Special Conditions, and Specification for instructions on submittals
2. A number following the Vendor Data Code indicates number of submittal copies.
*3. An X in this column indicates that the item must be examined/approved by the Contractor prior to use.

VENDOR DATA SCHEDULE

Project Title: OU 3-13 Group 1 Tank Farm Interim Action Subcontract No.: TBD

Prepared By: K. D. Fritz Date: 8/01/00 Rev.: 0

VENDOR DATA CODES

A. As-Built Drawings
B. Assembly Drawings
C. Attendance Record
D. Blasting Plan
E. Catalog Data
F. Chem & Physical Analysis
G. Concrete Mix Design
H. Control System Diagram
I. Design Calculations
J. Installation Instructions
K. Manufacturer's Data Report
L. O & M Manual
M. Parts List
N. Piping Drawing
O. Procedure/Instructions
P. Pump Head Curves
Q. Qualification/Resume
R. Quality Program
S. Red-line Drawings
T. RSMI & Maintenance Log
U. Sample (Color, Texture, etc.)
V. Shop Drawings
W. Survey Records
X. Test Procedure
Y. Test Report
Z. UL/FM Listing
AA. Warranty/Guarantee
AB. Weld Record Package
AC. Wiring Diagrams
AD. MSDS
AE. Hardware Schedule
AF. Hazardous Materials
AG. Logbook
AH. Pipe Certification

WHEN TO SUBMIT

AC - As Completed
AT - After Test
BC - Before Contract Awarded
BFA - Before Final Acceptance
BFR - Before Fabrication Release
PDS - Prior to Delivery on Site
PTP - Prior to Purchase
PS - Prior to Shipment
PT - Prior to Test
PTC - Prior to Construction Start
PTI - Prior to Installation
PTW - Prior to Welding
WP - With Proposal
WS - With Shipment

Item No.	Drawing Or Spec. Ref.	Description	VD Code/ Copies	When To Submit	Approval Code 1. App. 2. Info.	Reviewer	Receipt Insp.*
28	09810	POLYUREA SUBCONTRACTOR'S EXPERIENCE & QUALIFICATIONS	Q/4	WP	2	CMQE	
29	09810	POLYUREA REPAIR KIT AND INSTRUCTIONS	J/4	BFA	2	CM,AE,QE	
30	09810	POLYUREA COATING WARRANTY	AA/4	BFA	2	CM,QE	
31	09810	POLYUREA COLOR CHART	U/4	PTP	1	CM	
32	09810	POLYUREA SAMPLES WITH HIGH FRICTION SURFACES	U/4	PTI	1	CM	
33	09810	POLYUREA SAMPLE WITH FINISH COLOR	U/4	PTI	1	CM	
34	15401	PIPING & PLUMBING QUALIFICATIONS	Q/4	PTI	2	CM,QE	
35	15401	PIPING AND PLUMBING SHOP DRAWINGS	V/4	PTP	1	STR,CM	
36	15401	MAINTENANCE MANUALS	L/4	BFA	2	CM,QE	
37	15480	SHOP DRAWINGS FOR LIFT STATION	V/6	BFR	1	CM,AE,STR	
38	15480	PUMP WARRANTY	AA/4	BFA	2	CM,QE	
39	15480	PUMP MANUFACTURER'S EXPERIENCE	Q/4	PTI	2	CM	
40	15480	CONSTRUCTION COMPONENT STARTUP PROCEDURES	X/6	PT	1	CM,QE	
41	15480	CONSTRUCTION COMPONENT STARTUP TEST REPORTS	Y/6	AT	1	CM,QE	
42	15480	PUMP OUTLINE DRAWINGS	B,N/6	BFA	2	CM,AE	
43	15480	PUMP CONTROL DATA	E,H/4	BFA	2	CM,AE	
44	15480	INSTALLATION GUIDES	J/4	BFA	2	CM,QE,STR	
45	15480	PUMP CONTOLLER ELECTRICAL SCHEMATICS	AC/4	BFA	2	CM,AE	
46	15480	PUMP START-UP PROCEDURES	X/6	PT	1	CM,QE	
47	15480	PUMP START-UP REPORTS	Y/6	AT	1	CM,QE	
48	15480	LIFT STATION ACCESS FRAME PRODUCT DATA	E/4	BFA	2	CM,QE	
49	15480	TECHNICAL MANUALS	L/4	AC	2	CM,QE	
50	15480	PARTS LIST	M/4	AC	2	CM,QE	
51	15481	PUMP CONTROL DATA	E,H/4	BFA	2	CM,AE	
52	15481	TYPICAL INSTALLATION GUIDES	J/4	BFA	2	CM,QE,STR	
53	15481	PUMP OUTLINE DRAWING	B,N/6	BFA	2	CM,AE	
54	15481	PUMP CONTROLLER ELECTRICAL SCHEMATICS	A,C/4	BFA	2	CM,AE	

Instructions:
1. Refer to General Provisions, Special Conditions, and Specification for instructions on submittals
2. A number following the Vendor Data Code indicates number of submittal copies.
*3. An X in this column indicates that the item must be examined/approved by the Contractor prior to use.

VENDOR DATA SCHEDULE

Project Title: OU 3-13 Group 1 Tank Farm Interim Action

Subcontract No.: TBD

Prepared By: K. D. Fritz

Date: 8/01/00

Rev.: 0

VENDOR DATA CODES

A. As-Built Drawings
B. Assembly Drawings
C. Attendance Record
D. Blasting Plan
E. Catalog Data
F. Chem & Physical Analysis
G. Concrete Mix Design
H. Control System Diagram
I. Design Calculations
J. Installation Instructions
K. Manufacturer's Data Report
L. O & M Manual
M. Parts List
N. Piping Drawing
O. Procedure/Instructions
P. Pump Head Curves
Q. Qualification/Resume
R. Quality Program
S. Red-line Drawings
T. RSMI & Maintenance Log
U. Sample (Color, Texture, etc.)
V. Shop Drawings
W. Survey Records
X. Test Procedure
Y. Test Report
Z. UL/FM Listing
AA. Warranty/Guarantee
AB. Weld Record Package
AC. Wiring Diagrams
AD. MSDS
AE. Hardware Schedule
AF. Hazardous Materials
AG. Logbook
AH. Pipe Certification

WHEN TO SUBMIT

AC - As Completed
AT - After Test
BC - Before Contract Awarded
BFA - Before Final Acceptance
BFR - Before Fabrication Release
PDS - Prior to Delivery on Site
PTP - Prior to Purchase
PS - Prior to Shipment
PT - Prior to Test
PTC - Prior to Construction Start
PTI - Prior to Installation
PTW - Prior to Welding
WP - With Proposal
WS - With Shipment

Item No.	Drawing Or Spec. Ref.	Description	VD Code/ Copies	When To Submit	Approval Code 1. App. 2. Info.	Reviewer	Receipt Insp.*
55	15481	PUMP WARRANTY	AA/4	BFA	2	CM,QE	
56	15481	PUMP MANUFACTURER'S EXPERIENCE	Q/4	PTI	2	CM,QE	
57	15481	CONSTRUCTION COMPONENT TEST PROCEDURES	X/6	PT	1	CM,QE	
58	15481	TECHNICAL MANUALS	L/4	AC	2	CM,QE	
59	15481	PARTS LIST	M/4	AC	2	CM,QE	
60	16000	CONSTRUCTION COMPONENT STARTUP PROCEDURES	X/6	PT	1	CM,QE	
61	16000	CONSTRUCTION COMPONENT STARTUP TEST REPORTS	Y/6	AT	1	CM,QE	
62	16120	MEGGER TEST REPORTS	Y/4	AT	2	QE	
63	16120	END TO END CONTINUITY TEST REPORTS	Y/4	AT	2	QE	

Instructions:

1. Refer to General Provisions, Special Conditions, and Specification for instructions on submittals
2. A number following the Vendor Data Code indicates number of submittal copies.

*3. An X in this column indicates that the item must be examined/approved by the Contractor prior to use.

1. PURPOSE

This procedure outlines the limitations for surface loads to enter the tank farm load zones in various surface conditions as per TS 4.2B14.

2. SCOPE AND APPLICABILITY

This procedure identifies loads that can be used on applicable tank farm load zones; included are actions to take when load type is needed, but not listed, or surface conditions such as snow or mud are present.

3. PREREQUISITES

None.

4. INSTRUCTIONS

NOTE: *Drawing number 097726, Limitations On Vehicle Loads On The ICPP Tank Farm, can be used as a reference.*

4.1 Liquid Waste Processing Operators: GO TO form INTEC-4163X, Tank Farm Surface Load Zone Inspections, and perform a weekly (see instructions on 4163X) survey of existing surface conditions, vehicles and loads.

4.2 Tank Farm Facility Management or Designee, or Liquid Waste Processing Shift Supervision: Review conditional steps 4.2.1 through 4.2.5 and go to the appropriate response step (4.3 through 4.7) for limitations and controls.

4.2.1 IF controlling and monitoring vehicles,
THEN GO TO step 4.3.

4.2.2 IF controlling and monitoring non-vehicle loads such as gravel, soil, plywood and cement barriers, for example,
THEN GO TO step 4.4.

4.2.3 IF controlling and monitoring large personnel groups,
THEN GO TO step .4.5

4.2.4 IF controlling and monitoring weather caused surface conditions,
THEN GO TO step 4.6.

4.2.5 IF at any time a load control discrepancy is discovered,
THEN GO TO step 4.7.

4.3 Prior to any vehicle entering tank farm load control zones, do the following:

NOTE: *Drawing number 097726, Limitations On Vehicle Loads On The ICPP Tank Farm, can be used as a reference.*

4.3.1 IF the actual vehicle load exceeds the vehicle's full nominal load,
THEN contact tank farm facility management before proceeding.

4.3.2 GO TO Appendix A, Specified Vehicle Listing, to ensure vehicle is listed;
THEN RETURN TO step 4.3.3.

4.3.3 IF a vehicle is not listed in Appendix A,
THEN contact Tank Farm Facility management or Liquid Waste Processing shift supervision to see if the vehicle has prior access approval and filed per the 5% and 95% criteria (filed 4162X).

4.3.4 IF the vehicle has no prior access approval under the 5% and 95% criteria,
THEN GO TO form INTEC-4162X, Tank Farm Vehicle or Load Addition Worksheet, to calculate the specified variables to verify if the 5% and 95% criteria can be met,
AND RETURN TO step 4.3.5.

NOTE 1: *Vehicles may be replaced by other vehicles on a one for one basis, provided they have similar loads and configurations.*

NOTE 2: *The 5% and 95% criteria are defined on form INTEC-4162X, Tank Farm Vehicle or Load Addition Worksheet.*

NOTE 3: *New vehicles are evaluated against those vehicles listed in Appendix A only.*

4.3.5 IF the vehicle meets the criteria
THEN GO TO INTEC-4162X, complete and give to shift supervision;
AND RETURN TO step 4.3.6.

4.3.6 WHEN a vehicle is approved (as shown on 4162X) or is listed in the table in Appendix A,
THEN GO TO the beginning of Appendix A for a listing of zones the specified vehicle can travel on,
AND RETURN TO step 4.3.8.

4.3.7 IF several vehicles are being used in the Tank Farm AND are not under direct control of Waste Processing personnel,
THEN use chain markers, per shift supervision's direction, to identify the load zones.

4.3.8 Inform drivers to follow designated route and that vehicle speed must be 2.5 mpg or less to prevent amplifying wheel pressure upon the soil.

4.3.9 IF moving a crane on location,
THEN inform the crane operator that the crane boom and its load must be kept low (as reasonably possible) for safe transportation.

4.3.10 IF maintenance, access, or general activities to the tank farm disturbs the tank farm membrane,
THEN contact the Tank Farm Facility Engineer or designee.

4.4 IF a non-vehicle load such as gravel, soil, plywood and concrete, for example, are needed on the tank farm,
THEN do the following:

4.4.1 IF the non-vehicle load is 1000 pounds or less,
THEN no monitoring is needed.

4.4.2 IF a non-vehicle load exceeds 1000 pounds,
THEN contact tank farm Facility Engineer or designee for further instructions.

4.5 IF a large closely assembled group needs access to the tank farm,
THEN do the following:

NOTE 1: *A tour group, regardless of individual spacing, is considered closely assembled.*

NOTE 2: *Groups less than 17 need no monitoring*

4.5.1 IF a group between 18 and 54 accumulate in one load zone,
THEN the group must be controlled and monitored to the equivalency and restrictions of a Category 1 vehicle.

NOTE: *Closely assembled groups beyond 108 are not allowed on the tank farm.*

4.5.2 IF a closely assembled group between 55 and 108 accumulate in one load zone,
THEN the group must be controlled and monitored to the equivalency and restrictions of a Category 2 vehicle.

NOTE: *Rain amounts need not be monitored for tank farm surface load control.*

4.6 IF rain or snow has caused surface conditions to become questionable (visible puddles, obviously wet soil, or more than 16 inches of snow),
THEN do the following:

4.6.1 IF more than 16 inches of surface snow depth is measured,
THEN stop vehicle entrances, exits or movement on the tank farm,
AND contact the Tank Farm Facility Engineer or designee.

4.6.2 IF surface conditions exist under heavy rain or snow accumulations, or is excessively muddy,
THEN contact Industrial Safety or Tank Farm Facility management to determine if circumstances will make driving hazardous or will disturb the tank farm membrane.

4.7 IF a load control discrepancy is discovered
THEN perform the following:

4.7.1 STOP WORK, and record the condition.

4.7.2 Notify the Tank Farm Facility Engineer or designee.

4.7.3 Remove vehicle(s) as required to a D-Zone to reduce vehicle loads within procedure acceptance limits.

5. RECORDS

Records Description	Uniform File Code	Disposition Authority	Retention Period
INTEC-4162X, Tank Farm Vehicle or Load Addition Worksheet	Refer to INTEC Operations Record Index. (Contact Records Management personnel for copy of index.)		
INTEC-4163X, Tank Farm Surface Load Zone Inspections	Refer to INTEC Operations Record Index. (Contact Records Management personnel for copy of index.)		

6. DEFINITIONS

None.

7. REFERENCES

None

8. APPENDICES

Appendix A, Vehicle Load Zone Guide and Specified Vehicle Listing
Appendix B, Procedure Basis

APPENDIX A
Vehicle Load Guide and Specified Vehicle Listing

1. Vehicles given in the below table are grouped in four categories: I, II, III & IV.

2. Vehicles allowed in each zone as shown on drawing number 097726, Limitations On Vehicle Loads On The ICPP Tank Farm, are as follows.

   1) Zone A: A maximum of two (2) category I vehicles (except Bobcat 753), at least 10 feet apart.

   2) Zone B: A maximum of two (2) category I at least 10 feet apart.

   3) Zone C: Zone can accommodate one of the following vehicles combinations at any given time

      a. Four (4) category I vehicles

      b. Two (2) category I vehicles and one (1) category II vehicle

      c. Two (2) category II vehicles

      d. One (1) category III vehicle

      e. Any other combination of vehicles with a sum weighing factor of 4.0 or less (see table category headings) is also allowed in Zone C.

   4) Zone D: Any combination of categories I, II, III, or IV ($\geq$ 50 ft. from VES-WM-180 through VES-WM-190 vault walls).

3. Zones A, B, and C are determined using the vehicle weight and its nominal full load weight.

APPENDIX A
Vehicle Load Guide and Specified Vehicle Listing

Category I Vehicles (Weighing Factor equal 1.0)	
Trucks	
	Ford Ranger 4X2
	Ford Ranger 4X4
	Ford F150
	Ford F250 (GWV: 8600 lb)
	Ford F250 HD
	Dodge Ram 150 (GWV: 5250 lb)
	Chevy Cheyenne (GWV: 7200 lb)
Loader	
	Bobcat 753
Vibratory Rammers	
	Wacker BS45Y
	Wacker BS60Y and GVF151Y
	Wacker BS62Y, 65Y
Roller	
	Stone Duomat DR60
Personnel	
	Accumulate group of 18 to 50

APPENDIX A
Vehicle Load Guide and Specified Vehicle Listing

Category II Vehicles (Weighing Factor equals 2.0)	
Trucks	
	Ford F350 SWR
	Ford F350 DRW
	Ford F350 SD
Tractor trucks (without load)	
	International 4854
	Ford L8000
Forklifts	
	Caterpillar V70F
	Caterpillar V80F
	Caterpillar V90F
	Caterpillar V100F
	Caterpillar VC110F
	Caterpillar V110B
Backhoes	
	Case 580 Backhoe
	Case 580E Extendahoe
	Case 580 Super K Loader
	Case 580D Backhoe
	John Deere 310D Loader
	John Deere 410D Loader
Crane	
	Grove AP 308
Drill Rigs	
	Long Year 2200
	Killman BK-B1

APPENDIX A
Vehicle Load Guide and Specified Vehicle Listing

(category II vehicles continued)

Vibratory Rollers	
	Wacker BS105Y
	Wacker Mikasa MT-85
	Wacker RS800A, H
	Wacker RD800V
	Wacker WDH86/110
	Wacker W55, 55T, 74, 74A
	Wacker RT560
	Wacker RT820
	Wacker R1000, S, B
	Stone Duomat R50P
	Stone Duomat DR70, 70P
	Stone Duomat R778, DR77
	Stone Duomat R90B
	Stone Duomat CP323, CS323
	Ingersol Rand DA-30 Roller
Crawler Tractors	
	D4H crawler
Manlift	
	Simon MPL-60
Personnel	
	Accumulate group of 55 to 108

APPENDIX A
Vehicle Load Guide and Specified Vehicle Listing

Category III Vehicles (Weighing Factor equals 4.0)	
Trucks	
	10 Yd Dump Truck
	Truck Tractor with 40 foot trailer
	10 Yd Concrete Truck
	GM Two-ton Truck
Forklifts	
	Hyster Forklift A66 (Mudduck)
	Caterpillar V130B
	Caterpillar V155B
	Liftall HT150
Drill Rig	
	Becho
	CME 55
Cranes	
	P&H 18
	P&H 35
	P&H 120
	P&H 122
	P&H 128
	Grove RT58C
	Grove RT58E*
	Grove RT418
	Grove RT500
	Grove RT550
	Grove RT528C
	Grove RT630B
Backhoe	
	Hitachi Trackhoe UH082
Loader	
	International 520
	Caterpillar 966C
Roller	
	Caterpillar CB434
Single Loader Hot Waste Box	

*No other vehicles are permitted in the A, B, and C zones of the Tank Farm at the same time as the Grove RT58E.

APPENDIX A
Vehicle Load Guide and Specified Vehicle Listing

Category IV Vehicles (Weighing Factor equals 5.0)	
Cranes	
	P&H 150
	P&H 165
	P&H 750
	Grove RT740B
	Grove RT760
	Grove RT865B
	Grove RT990
Loader	
	Caterpillar 235

Light Duty Utility Arm (LDUA) Equipment	
LDUA - Trailer Mounted	See approved LDUA Tank Farm Access Load Study for specific tank.
LDUA - Truck Mounted	See approved LDUA Tank Farm Access Load Study for specific tank.
Hydraulic Power Unit Trailer	See approved LDUA Tank Farm Access Load Study for specific tank.
Utility Trailer	See approved LDUA Tank Farm Access Load Study for specific tank.
Operational Control Trailer	See approved LDUA Tank Farm Access Load Study for specific tank.

APPENDIX B
Procedure Basis

The following writing team members should approve all substantive changes to MCP-P7.5-A1.

The following subject matter experts (SMEs) helped create revision 0 of MCP- P7.5-A1.

Writing Team		SMEs	
Writer:	Oliver Hartwig	ES&H:	Anjan Majumder
Operator:	Dale Sebring	ES&H:	Wayne Kanady
Facility Engineer:	Dave Machovec	ES&H:	Michael Jorgensen
		Q&PA:	Frank Breen
		Engineering:	Rhoel Tierra
		Engineering	Nate Smith
		Engineering	Sal Mascarenas

Step Number	Step Basis	Information Source
1.	Procedure satisfies Technical Standard 4.2B14, Specification number 2 as the *Methodology*.	TS 4.2B14, Spec. 2
4.5.1	Groups of 18 to 54 as Category 1 vehicle.	Letter from Denis McGee to Robert Davis, WDM-32-95
4.5.2	Groups of 55 to 108 as Category 2 vehicle.	Letter from Denis McGee to Robert Davis, WDM-32-95
4.6.1 and NOTE 1	Rain amounts need not be monitored for tank farm surface load control.	Letter from Denis McGee to Robert Davis, WDM-31-95

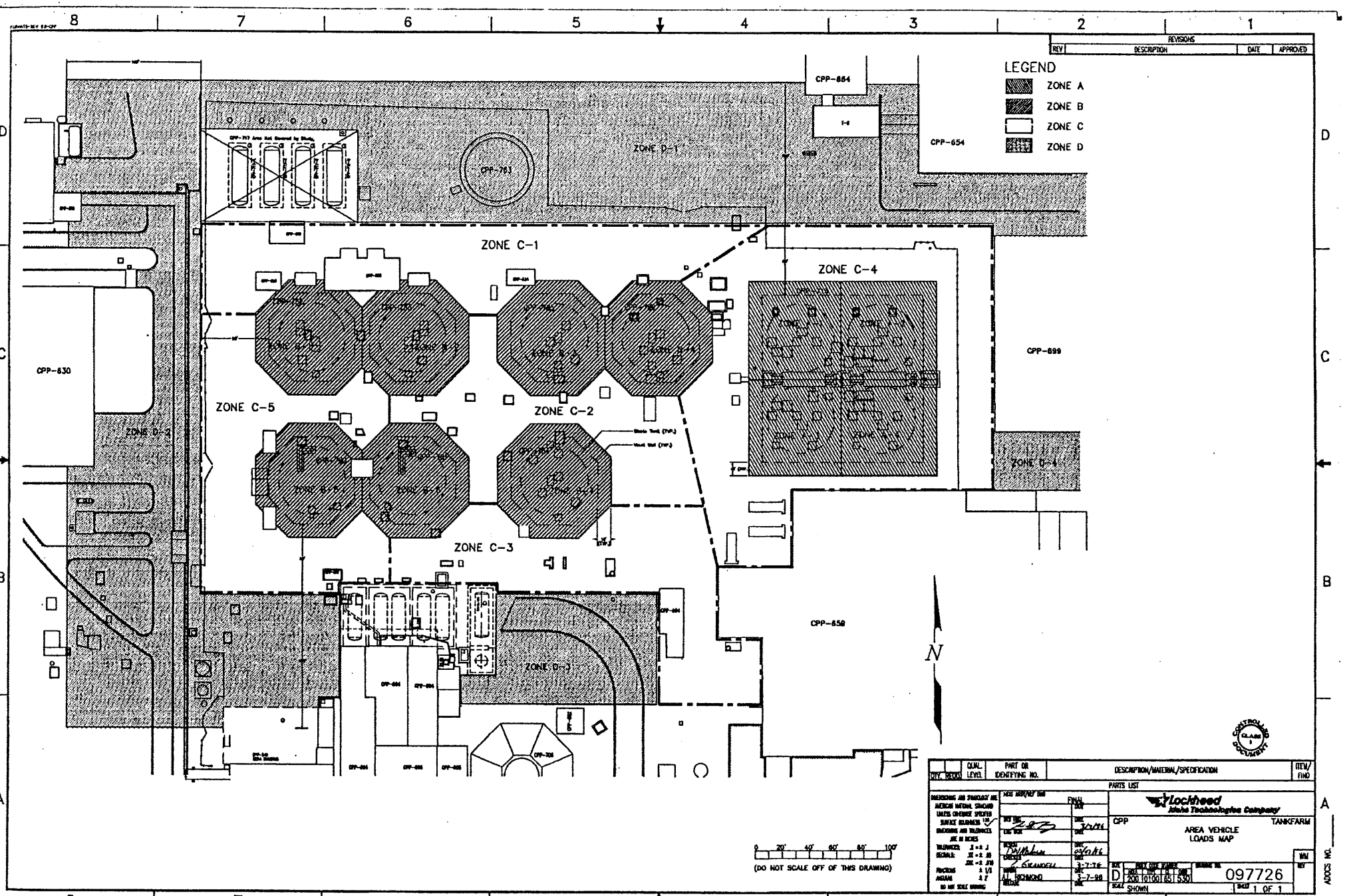
LEGEND
ZONE A
ZONE B
ZONE C
ZONE D
ZONE D-1
ZONE C-1
ZONE C-2
ZONE C-3
ZONE C-4
ZONE C-5
ZONE D-2
ZONE D-3
ZONE D-4
CPP-630
CPP-654
CPP-659
CPP-664
CPP-699
CPP-701
N
(DO NOT SCALE OFF OF THIS DRAWING)
REVISIONS
REV
DESCRIPTION
DATE
APPROVED
QTY. REQD
QUAL. LEVEL
PART OR IDENTIFYING NO.
DESCRIPTION/MATERIAL/SPECIFICATION
ITEM/FIND
PARTS LIST
Lockheed
Idaho Technologies Company
CPP
TANKFARM
AREA VEHICLE LOADS MAP
D
200 10100165 530
097726
SCALE SHOWN
SHEET 1 OF 1
1 TBA

Appendix F

Design Drawings

FMT-D1-REV 3.1

REVISIONS		
REV	DESCRIPTION	EFFECTIVE DATE:

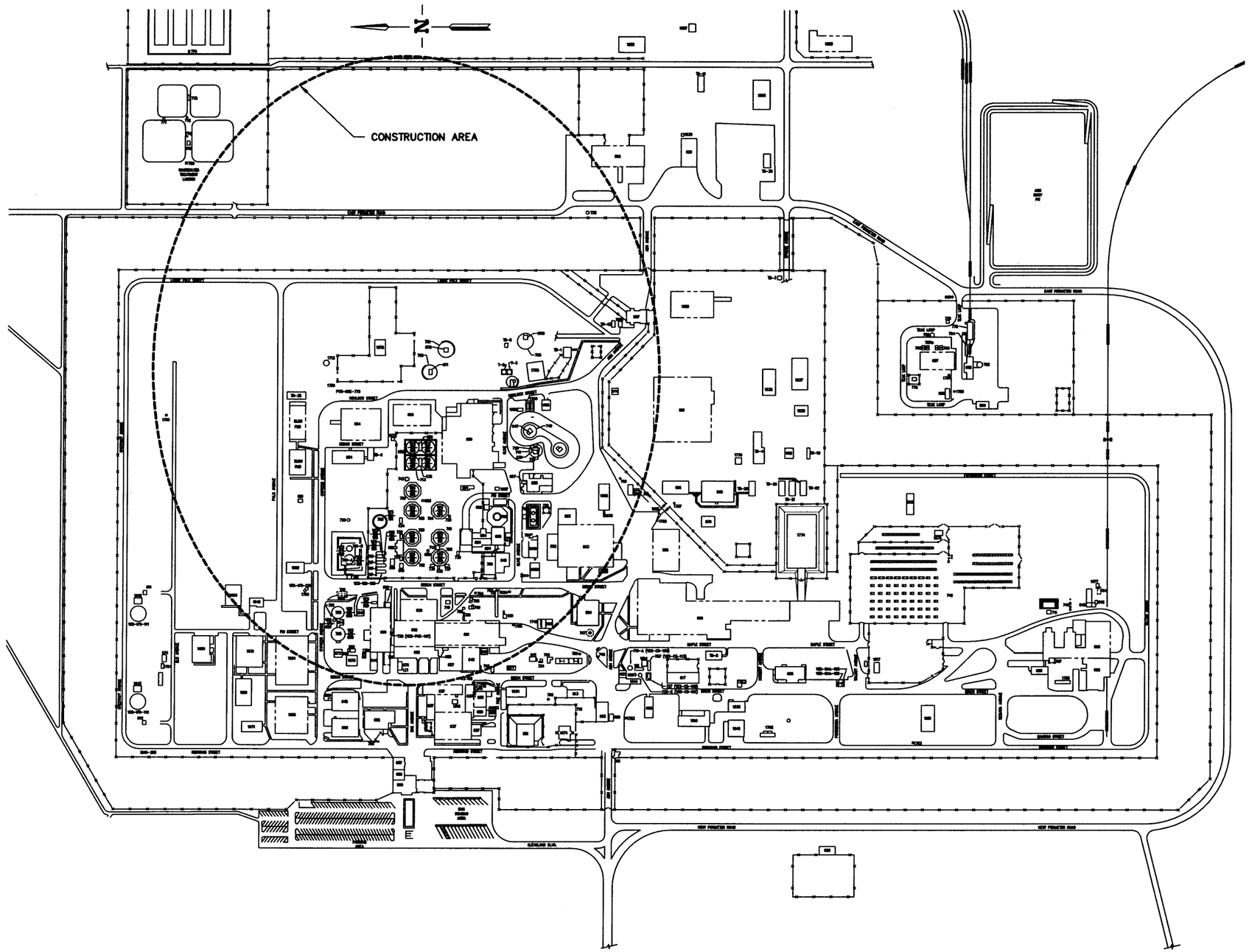

INTEC AREA MAP

SCALE: 1"=200.0'

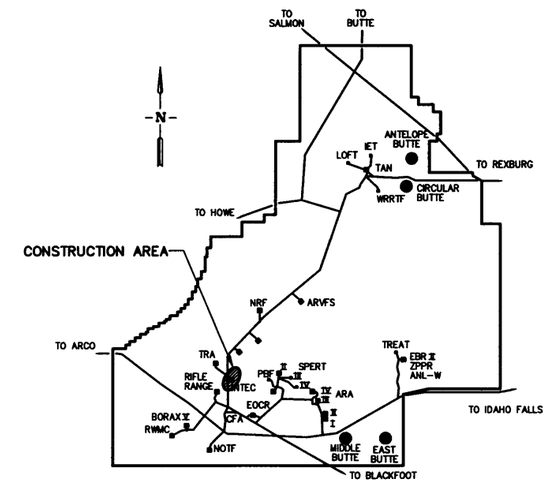

SITE MAP

SCALE: NONE

FOR DRAWING INDEX SEE DRAWING NO. 515158	SUBCONTRACT NO. S00-588051	INEEL (Idaho National Engineering & Environmental Laboratory) BECHTEL BWXT IDAHO, LLC
200' 100' 50' 0 200' SCALE: 1" = 200.0'	REQUESTER: M.S. KAPTEIN	INEEL OU 3-13 GROUP 1 TANK FARM INTERIM ACTION PHASE 1& 2 SITE MAP AND AREA MAP
	DESIGN: KURT FRITZ	
	DRAWN: ROB HERGESHEIMER	
	PROJECT NO. 020978	
	SPEC CODE	
DESIGN PHASE: AFC	FOR REVIEW/APPROVAL SIGNATURES SEE DAR NO. 68366	SIZE D / CAGE CODE / INDEX CODE NUMBER: AREA 200, TYPE 0100, CL 38, ORIG 090 / DWG-515157 / REV
QUALITY LEVEL: 3	EFFECTIVE DATE: 9/18/2000	SCALE: NOTED / SHEET T-1

File: T-1.dwg ID: RDH5 Layout Name: Layout1
Path: G:\OU3-13-TANKFARM\9-6-00 Dallas:RBJ/RDH/00 - 4:01 P.M.

FMT-D1-REV 3.2

REVISIONS		
REV	DESCRIPTION	EFFECTIVE DATE:

DRAWING INDEX

PAGE NO.	DWG NO.	A-E DWG NO.	REV	DRAWING TITLE
1	515157	T-1	–	SITE MAP AND AREA MAP
2	515158	T-2	–	DRAWING INDEX
3	515159	T-3	–	LEGEND, ABBREVIATIONS AND GENERAL NOTES
4	515160	C-1	–	ALIGNMENT PLAN (1 OF 2)
5	515161	C-2	–	ALIGNMENT PLAN (2 OF 2)
6	515162	C-3	–	ALIGNMENTS 1, 3, 5 & 7 PLANS
7	515163	C-4	–	ALIGNMENT 2 PLAN (1 OF 2)
8	515164	C-5	–	ALIGNMENT 2 PLAN (2 OF 2)
9	515165	C-6	–	ALIGNMENT 4 PLAN (1 OF 2)
10	515166	C-7	–	ALIGNMENT 4 PLAN (2 OF 2)
11	515167	C-8	–	ALIGNMENT 6 PLAN
12	515168	C-9	–	ALIGNMENT 8 PLAN (1 OF 2)
13	515169	C-10	–	ALIGNMENT 8 PLAN (2 OF 2)
14	515170	C-11	–	ALIGNMENT 1 PROFILE
15	515171	C-12	–	ALIGNMENT 2 PROFILE
16	515172	C-13	–	ALIGNMENT 3 PROFILE
17	515173	C-14	–	ALIGNMENT 4 PROFILE
18	515174	C-15	–	ALIGNMENT 5 PROFILE
19	515175	C-16	–	ALIGNMENT 6 PROFILE
20	515176	C-17	–	ALIGNMENT 7 PROFILE
21	515177	C-18	–	ALIGNMENT 8 PROFILE
22	515178	C-19	–	EVAPORATION POND 1793
23	515179	C-20	–	EVAPORATION POND SECTIONS
24	515180	C-21	–	EVAPORATION POND SECTIONS AND DETAILS
25	515181	C-22	–	EVAPORATION POND DETAILS
26	515182	C-23	–	EVAPORATION POND SECTIONS AND DETAILS
27	515183	C-24	–	EVAPORATION POND SECTION, VIEWS AND DETAILS
28	515184	C-25	–	TANK FARM GRADING PLAN
29	515185	C-26	–	GRADING PROFILES 1, 2 AND 3
30	515186	C-27	–	GRADE PROFILES 4, 5, 6 AND 7
31	515187	C-28	–	POLYUREA COATING AND ASPHALT CONCRETE PLAN
32	515188	C-29	–	ENLARGED AREA 1
33	515189	C-30	–	ENLARGED AREA 2
34	515190	C-31	–	ENLARGED AREA 3
35	515191	C-32	–	ENLARGED AREA 4

DRAWING INDEX

PAGE NO.	DWG NO.	A-E DWG NO.	REV	DRAWING TITLE
36	515192	C-33	–	DITCH DETAILS AND SECTIONS
37	515193	C-34	–	HEADWALL AND ENDWALL DETAILS & SECTIONS
38	515194	C-35	–	MANHOLE DETAIL AND SECTIONS
39	515195	C-36	–	ENDWALL DETAILS AND SECTIONS
40	515196	C-37	–	ENDWALL DETAIL AND SECTIONS
41	515197	C-38	–	HEADWALL DETAIL AND SECTIONS
42	515198	C-39	–	HEADWALL DETAIL AND SECTIONS
43	515199	C-40	–	ENDWALL DETAIL AND SECTIONS
44	515200	C-41	–	CATCH BASIN DETAIL AND SECTIONS
45	515201	C-42	–	ENLARGED PLAN AND DETAILS
46	515202	C-43	–	DRAIN INLET SECTIONS AND DETAIL
47	515203	C-44	–	MANHOLE AND MISC. DETAILS AND SECTIONS
48	515204	C-45	–	MISC. DETAILS
49	515205	C-46	–	LIFT STATION SECTIONS AND DETAIL
50	515206	C-47	–	FENCING DETAILS
51	515207	E-1	–	MCC-OGF-1049 ONE LINE DIAGRAM
52	515208	E-2	–	CPP-1773 FLOOR PLAN
53	515209	E-3	–	CPP-604 FLOOR PLAN
54	515210	E-4	–	CPP-649 FLOOR PLAN AND SECTIONS
55	515211	E-5	–	PB-WL-EE-167 & 169 LAYOUT AND SECTIONS
56	515212	E-6	–	SECTIONS
57	515213	E-7	–	PUMP CONTROLLER PAD DETAILS
58	515214	E-8	–	LIFT STATION 1792 PLAN, SECTION & DETAILS
59	515215	E-9	–	SCHEDULES AND LABEL DETAIL
60	515216	E-10	–	PCC-CW2-1085 ONE LINE DIAGRAM
61	515217	E-11	–	PARTIAL CONDUIT LAYOUT PLAN & SECTION
62	515218	E-12	–	VIEW AND DETAILS
63	515219	E-13	–	RACK ELEVATION & LAYOUT

FOR DRAWING INDEX SEE DRAWING NO. 515158	SUBCONTRACT NO. S00-588051	INEEL (Idaho National Engineering & Environmental Laboratory) BECHTEL BWXT IDAHO, LLC
NO SCALE	REQUESTER: M.S. KAPTEIN DESIGN: KURT FRITZ DRAWN: M WINTERS PROJECT NO. 020978 SPEC CODE	INEEL OU 3-13 GROUP 1 TANK FARM INTERIM ACTION PHASE 1 & 2 DRAWING INDEX
DESIGN PHASE: AFC QUALITY LEVEL: 3	FOR REVIEW/APPROVAL SIGNATURES SEE DAR NO. 68366 EFFECTIVE DATE: 9/18/2000	SIZE D; CAGE CODE; INDEX CODE NUMBER AREA 200 TYPE 9999 Q 01 ORIG 090; DWG-515158; REV SCALE: NONE; SHEET T-2

File: T-2.dwg
Path: G:\OU3-13-TANKFARM\3-8-00
ID: RDH5
Layout Name: D Size
Default89/RB/00 - 4:01 P.M.

REVISIONS		
REV	DESCRIPTION	EFFECTIVE DATE:

SYMBOL KEY

- SECTION LETTER (A) / A/E SHEET REFERENCE (A-1)
- VIEW OR ELEVATION LETTER (A) / A/E SHEET REFERENCE (A-1)
- DETAIL NUMBER (1) / SAME SHEET REFERENCE (—)
- 6"WQN-106108 — EXISTING UNDERGROUND UTITILIES, SEE NOTE 18
- EXISTING ELECTRICAL OR TELEPHONE DUCT BANK
- EXISTING FIRE HYDRANT
- EXISTING PIV
- EXISTING GATE VALVE
- EXISTING POWER OR LIGHT POLE
- EXISTING ROADWAYS
- EXISTING BUILDINGS
- EXISTING SIDEWALKS
- MAH-XX-XX-XXX — EXISTING MANHOLE NUMBER
- NEW ITEMS TO BE INSTALLED
- +XX.XX — EXISTING ELEVATION
- XX.XX — NEW ELEVATION
- SLOPE OR GRADE TO DRAIN

MATERIALS

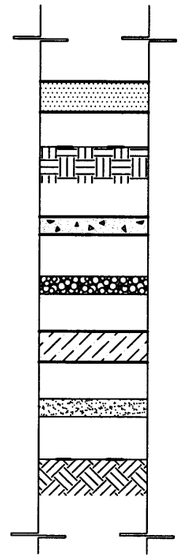

GENERAL NOTES

1. DRAWINGS IN THIS PACKAGE ARE BASED ON CURRENT "AS BUILT" UNDERGROUND UTILITIES AS SHOWN ON DRAWING 055315 AS OF 12/97. THE DRAWINGS IN THIS PACKAGE REFLECT CURRENT ABOVE GROUND CONDITIONS THAT WERE FIELD VERIFIED.
2. RETAIN AND PROTECT ALL EXISTING FACILITIES UNLESS OTHERWISE NOTED.
3. MANHOLES SHALL BE INSTALLED AT THE ELEVATION SHOWN ON THE DRAWINGS. FOR AREAS TO BE PAVED, SLOPE FINISHED SURFACE FROM TOP OF MANHOLE RING 12 FEET AWAY FROM MANHOLE TO MATCH EXISTING GRADE WITH NEW ASPHALT CONCRETE. INSTALLATION OF MANHOLES SHALL BE FROM COORDINATES LISTED ON DRAWINGS. STATIONING OF MANHOLES IS DRAWING SPECIFIC AND FOR REFERENCE ONLY.
4. PIPING SHALL BE SLOPED TOWARD MANHOLES FOR PROPER DRAINAGE AS SHOWN ON THE PLANS AND SHALL BE CONSTRUCTED ON A STRAIGHT SLOPE AS SHOWN ON THE PLANS.
5. CUT AND SPLICE ALL CATHODIC AND ELECTRICAL CABLES IN ACCORDANCE WITH THE SPECIFICATIONS.
6. ALL UTILITIES EXPOSED DURING EXCAVATION ARE TO BE ADEQUATELY SUPPORTED BY SUBCONTRACTOR TO PREVENT DAMAGE DURING ALL PHASES OF CONSTRUCTION, INCLUDING BACKFILL.
7. SHORING MAY BE USED AT THE SUBCONTRACTORS' OPTION. SHORING, IF USED, IS TO BE DESIGNED AND ENGINEERED BY THE SUBCONTRACTOR. SEE EARTHWORK SPECIFICATION.
8. LOCATION AND ELEVATION SHOWN FOR EXISTING UTILITIES ARE APPROXIMATE. SUBCONTRACTOR SHALL HAND EXCAVATE TO FIELD LOCATE INTERFERENCES AND PREVENT ANY DAMAGE DURING EXCAVATION. SEE SPECIAL CONDITIONS AND EARTHWORK SPECIFICATION.
9. LOCATOR RIBBON DISTURBED DURING EXCAVATION OVER EXISTING UTILITIES IS TO BE REPLACED DURING BACKFILL AND COMPACTION. ALL NEW UTILITIES ARE TO BE MARKED WITH LOCATOR RIBBON PER SPECIFICATION.
10. FOR ESTIMATING PURPOSES, REMOVAL AND SAW CUTTING OF ALL ASPHALT CONCRETE SURFACES ARE ASSUMED TO BE AN AVERAGE OF 4" THICK.
11. PRIOR TO BACKFILLING, ALL EXPOSED UNDERGROUND UTILITIES ARE TO BE LOCATED BY HORIZONTAL COORDINATES AND VERTICAL ELEVATION BASED ON INTEC HORIZONTAL DATUM AND NRTS VERTICAL DATUM AND RECORDED ON THE RED LINE DRAWINGS.
12. SUBCONTRACTOR SHALL REINSTALL ALL SIGNS REMOVED DURING CONSTRUCTION AT OR NEAR THE ORIGINAL POSITION AFTER CONSTRUCTION IS COMPLETE.
13. TEMPORARY TRAFFIC CONTROL SIGNS, BARRICADES, FLAGGING ETC. MAY BE REQUIRED TO PROPERLY CONTROL TRAFFIC DURING CONSTRUCTION. ALL SIGNING AND TRAFFIC CONTROL OPERATIONS SHALL COMPLY WITH THE CURRENT "MANUAL ON UNIFORM TRAFFIC CONTROL DEVICES".
14. WHERE SPLICING OF EXISTING CABLES IS REQUIRED, CABLES SHALL BE PLACED BELOW NEW DITCHES AND CULVERTS, UNLESS THERE IS ROOM ON TOP TO MAINTAIN ADEQUATE COVER OVER CULVERTS.
15. IN THE EVENT THERE ARE CONFLICTS BETWEEN THE NEW CONCRETE DITCHES AND THE EXISTING FACILITIES, THE SUBCONTRACTOR MAY MAKE MINOR ADJUSTMENTS IN ALIGNMENT AND ELEVATION OF NEW DITCHES. ADJUSTMENTS SHALL BE PER CONTRACTORS APPROVAL.
16. SUBCONTRACTOR IS TO KEEP EXCAVATION ACTIVITIES IN THE SHOWN ENVIRONMENTAL CONTROLLED AREAS (ECA'S) TO A MINIMUM. ALL EXCAVATED MATERIAL SHALL BE MANAGED PER THE SPECIAL CONDITIONS. SEE SHEETS C-1 AND C-2.
17. HORIZONTAL COORDINATES ARE INTEC SITE SPECIFIC. VERTICAL DATUM IS NRTS. NRTS IS 0.35' HIGHER THAN INTEC VERTICAL DATUM.
18. EXISTING UTILITIES ARE SHOWN AND IDENTIFIED FOR INFORMATION ONLY. SPECIFIC LINE TYPE IDENTIFICATION WILL BE FURNISHED UPON REQUEST.

ABBREVIATIONS

AC	ASPHALT CONCRETE	HS	HIGH PRESSURE STEAM	SPEC	SPECIFICATON
BLDG	BUILDING	HYD	HYDRANT	STA	STATION
℄	CENTERLINE	HORIZ	HORIZONTAL	STD	STANDARD
CLR	CLEAR (COVER OVER REBAR)	ID	INTERNAL DIAMETER	SW	SERVICE WASTE
CMP	CORRUGATED METAL PIPE	INV	INVERT	THK	THICK
CMPA	CORRUGATED METAL PIPE (ARCH)	LC	LOAD CENTER	TOC	TOP OF CONCRETE
CS	CARBON STEEL	LF	LINEAR FOOT	TOS	TOP OF STEEL
CONC	CONCRETE	LG	LENGTH OR LONG	TYP	TYPICAL
CONT	CONTINUOUS	MAH	MANHOLE	UN	UNLESS NOTED OTHERWISE
CO	CLEAN OUT	MATL	MATERIAL	VERT	VERTICAL
COMM	COMMUNICATIONS DUCT BANK	MAX	MAXIMUM	WQ	SANITARY SEWER
CT	CONDENSATE	MFR	MANUFACTURER	X-REF	EXTERNAL REFERENCE DRAWING
CTR	CENTER	MIN	MINIMUM		
CY	CUBIC YARD	NG	NATIVE GRAVEL		
DB	DUCT BANK	NRTS	NAVAL REACTOR TESTING STATION		
DIA ø	DIAMETER	NO.	NUMBER		
DIP	DUCTILE IRON PIPE	OC	ON CENTER		
DP	DEPTH	OD	OUTSIDE DIAMETER		
DWG	DRAWING	PC	POINT OF CURVE		
EA	EACH	PIV	POST INDICATOR VALVE		
EF	EACH FACE	PLCS	PLACES		
EL	ELEVATION	PT	POINT OF TANGENT		
EQ SP	EQUALLY SPACED	PVC	POLYVINYLCHLORIDE		
EW	EACH WAY	R	RADIUS		
EXIST.	EXISTING	RC	REINFORCED CONCRETE		
FH	FIRE HYDRANT	REF	REFERENCE		
FIN. GRD	FINISHED GRADE	REQD	REQUIRED		
FL	FLOW LINE	REV	REVISION		
FO	FIBER OPTIC CABLE	RGS	RIGID GALVANIZED STEEL		
FT	FOOT/FEET	RP	REFERENCE POINT		
FW	FIRE WATER	SEC	SECTION		
HH	HANDHOLE	SH	SHEET		

REVISION: 0
ORIGINAL SIGNED BY: KURT D. FRITZ
DATE ORIGINAL SIGNED: 9/18/2000
SEAL NUMBER: 9404
ORIGINAL STORED AT: EROB DOCUMENT CONTROL

PROFESSIONAL ENGINEER REGISTERED 9404 STATE OF IDAHO KURT D. FRITZ

FOR DRAWING INDEX SEE DRAWING NO. 515158	SUBCONTRACT NO. S00-588051	INEEL (Idaho National Engineering & Environmental Laboratory) BECHTEL BWXT IDAHO, LLC	
NO SCALE	REQUESTER: M.S. KAPTEIN DESIGN: KURT FRITZ DRAWN: M WINTERS PROJECT NO. 020978 SPEC CODE	INEEL OU 3-13 GROUP 1 TANK FARM INTERIM ACTION PHASE 1 & 2 LEGEND, ABBREVIATIONS AND GENERAL NOTES	
DESIGN PHASE: AFC	FOR REVIEW/APPROVAL SIGNATURES SEE DAR NO. 68366	SIZE D / CAGE CODE / INDEX CODE NUMBER: AREA 200, TYPE 9999, Q 38, ORG 090	DWG-515159 REV
QUALITY LEVEL: 3	EFFECTIVE DATE: 9/18/2000	SCALE: NONE	SHEET T-3

File: T-3.dwg
Path: G:\OU3-13-TANKFARM\9-6-00
ID: RDH5 Drawn in Model Space
Date: 09/06/00 - 1:12 P.M.

REVISIONS		
REV	DESCRIPTION	EFFECTIVE DATE:

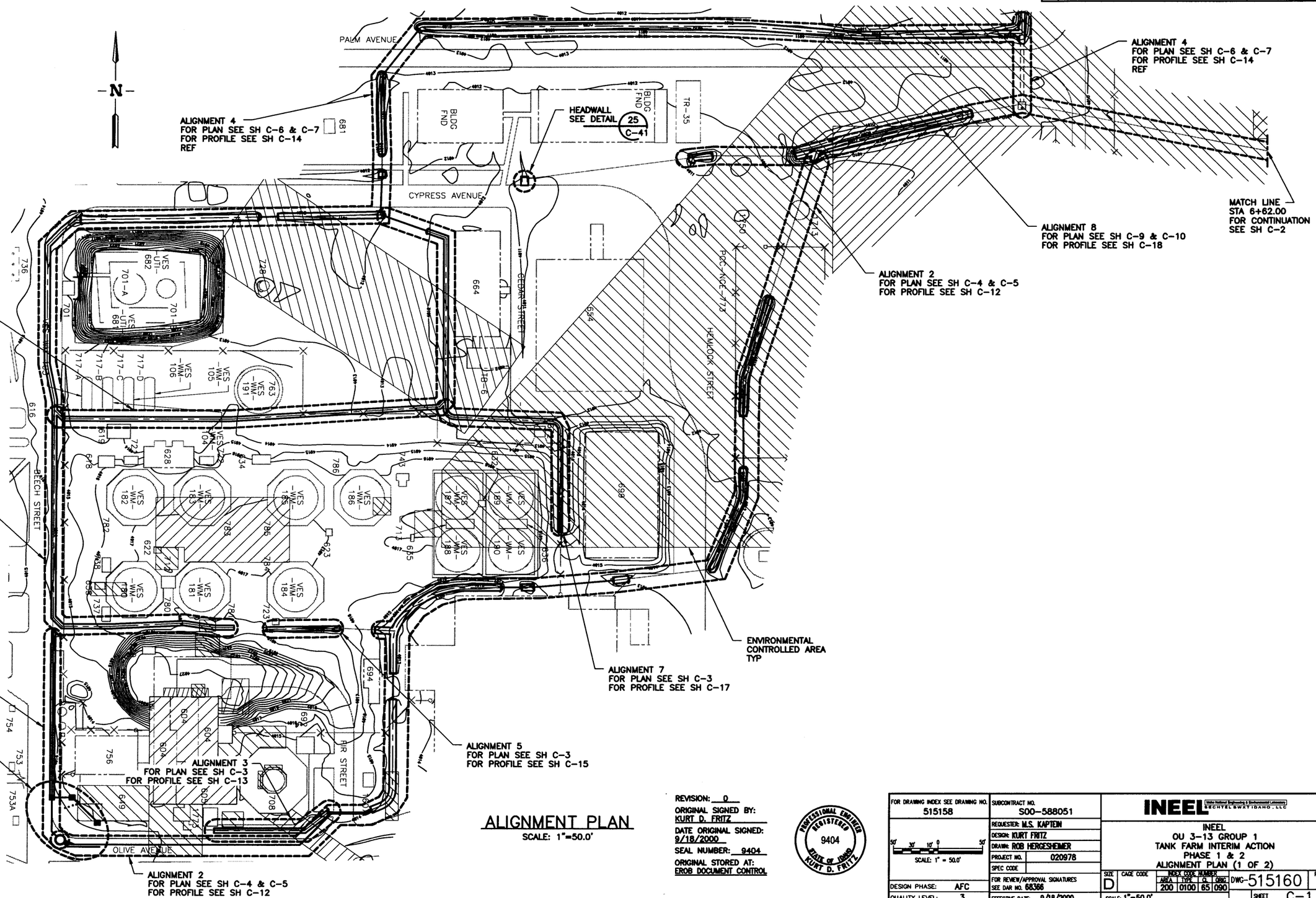

ALIGNMENT PLAN

SCALE: 1"=50.0'

REVISION: 0
ORIGINAL SIGNED BY: KURT D. FRITZ
DATE ORIGINAL SIGNED: 9/18/2000
SEAL NUMBER: 9404
ORIGINAL STORED AT: EROB DOCUMENT CONTROL

PROFESSIONAL ENGINEER REGISTERED 9404 STATE OF IDAHO KURT D. FRITZ

FOR DRAWING INDEX SEE DRAWING NO. 515158	SUBCONTRACT NO. S00-588051	INEEL (Idaho National Engineering & Environmental Laboratory) BECHTEL BWXT IDAHO, LLC
50' 30' 10' 0 50' SCALE: 1" = 50.0'	REQUESTER: M.S. KAPTEIN	INEEL OU 3-13 GROUP 1 TANK FARM INTERIM ACTION PHASE 1 & 2 ALIGNMENT PLAN (1 OF 2)
	DESIGN: KURT FRITZ	
	DRAWN: ROB HERGESHEIMER	
	PROJECT NO. 020978	
	SPEC CODE	
DESIGN PHASE: AFC	FOR REVIEW/APPROVAL SIGNATURES SEE DAR NO. 68366	SIZE D · CAGE CODE · INDEX CODE NUMBER AREA 200 · TYPE 0100 · CL 65 · ORIG 090 · DWG-515160 · REV
QUALITY LEVEL: 3	EFFECTIVE DATE: 9/18/2000	SCALE: 1"=50.0' · SHEET C-1

File: C-1.dwg Path: G:\OU3-13-TANKFARM\9-6-00 Layout Name: D Size ID: RDH5 Date:09/06/00 - 1:52 P.M.

FMT-D1-REV 3.1

REVISIONS		
REV	DESCRIPTION	EFFECTIVE DATE:

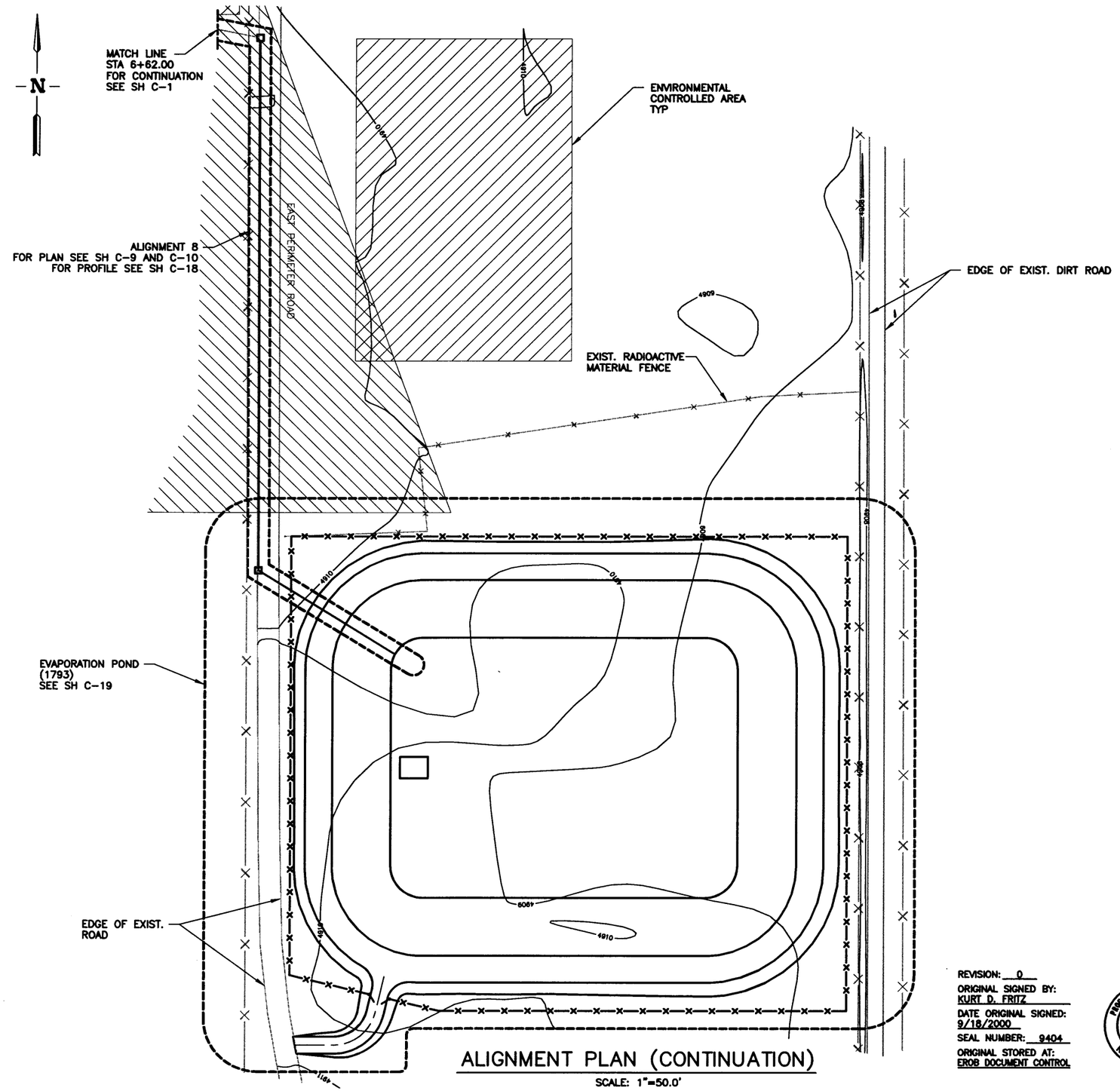

ALIGNMENT PLAN (CONTINUATION)

SCALE: 1"=50.0'

REVISION: 0
ORIGINAL SIGNED BY: KURT D. FRITZ
DATE ORIGINAL SIGNED: 9/18/2000
SEAL NUMBER: 9404
ORIGINAL STORED AT: EROB DOCUMENT CONTROL

PROFESSIONAL ENGINEER REGISTERED 9404 STATE OF IDAHO KURT D. FRITZ

FOR DRAWING INDEX SEE DRAWING NO.	515158
SCALE: 1" = 50.0'	
DESIGN PHASE:	AFC
QUALITY LEVEL:	3

SUBCONTRACT NO.	S00-588051
REQUESTER:	M.S. KAPTEIN
DESIGN:	KURT FRITZ
DRAWN:	ROB HERGESHEIMER
PROJECT NO.	020978
SPEC CODE	
FOR REVIEW/APPROVAL SIGNATURES SEE DAR NO.	68366
EFFECTIVE DATE:	9/18/2000

INEEL (Idaho National Engineering & Environmental Laboratory) BECHTEL BWXT IDAHO, LLC

INEEL
OU 3-13 GROUP 1
TANK FARM INTERIM ACTION
PHASE 1 & 2
ALIGNMENT PLAN (2 OF 2)

SIZE	CAGE CODE	INDEX CODE NUMBER: AREA	TYPE	Q.	ORG	DWG-	REV
D		200	0100	65	090	515161	

SCALE: 1"=50.0' SHEET C-2

File: C-2.DWG
Path: G:\OU3-13-TANKFARM\9-6-00 Bellev\RH5/00 - 1:55 P.M.
ID: RDH5 Layout Name: D Size

REVISIONS		
REV	DESCRIPTION	EFFECTIVE DATE:

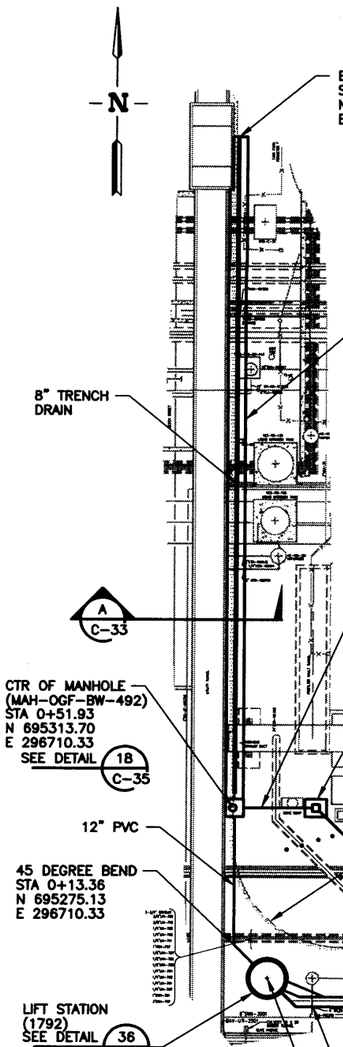

ALIGNMENT 1 PLAN

SCALE: 1"=20.0'

REF
C-1
C-4
C-6
C-31

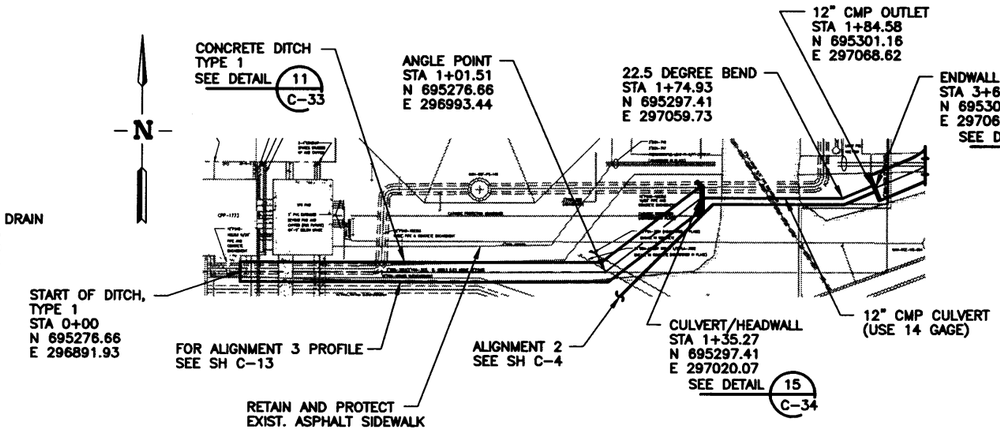

ALIGNMENT 3 PLAN

SCALE: 1"=20.0'

REF
C-1
C-4
C-32

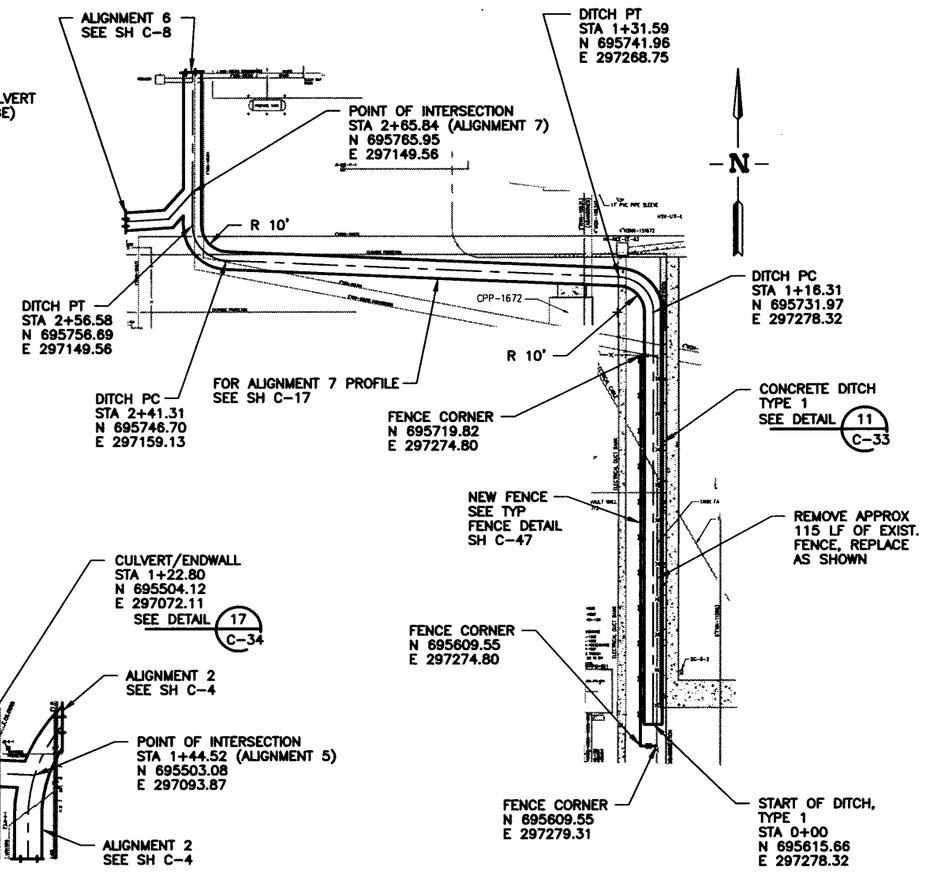

ALIGNMENT 7 PLAN

SCALE: 1"=20.0'

REF
C-1
C-8

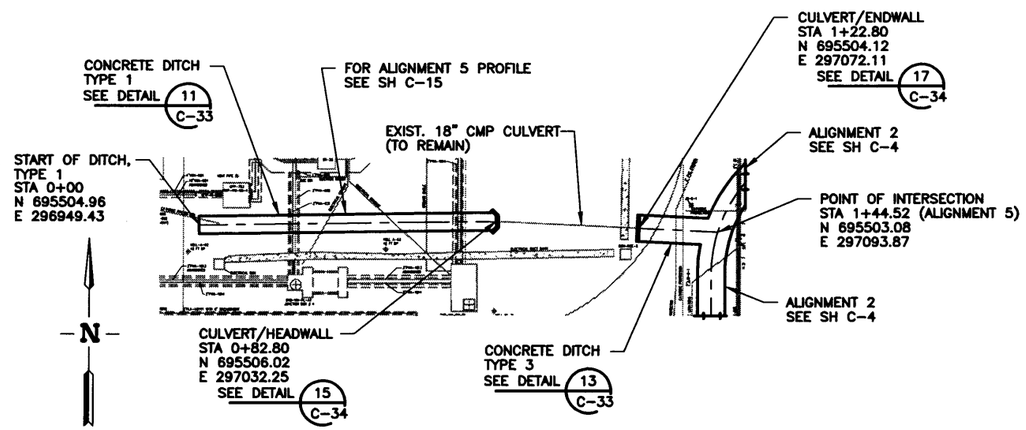

ALIGNMENT 5 PLAN

SCALE: 1"=20.0'

REF
C-1
C-4

X-REFERENCE

515220

NOTES

1. HORIZONTAL COORDINATES ARE INTEC SITE SPECIFIC. VERTICAL DATUM IS NRTS (0.35' HIGHER THAN INTEC VERTICAL DATUM).

REVISION: 0
ORIGINAL SIGNED BY: KURT D. FRITZ
DATE ORIGINAL SIGNED: 9/18/2000
SEAL NUMBER: 9404
ORIGINAL STORED AT: EROB DOCUMENT CONTROL

PROFESSIONAL ENGINEER REGISTERED 9404 STATE OF IDAHO KURT D. FRITZ

FOR DRAWING INDEX SEE DRAWING NO.	515158
SCALE: 1" = 20.0'	
DESIGN PHASE:	AFC
QUALITY LEVEL:	3
SUBCONTRACT NO.	S00-588051
REQUESTER:	M.S. KAPTEIN
DESIGN:	KURT FRITZ
DRAWN:	ROB HERGESHEIMER
PROJECT NO.	020978
SPEC CODE	
FOR REVIEW/APPROVAL SIGNATURES SEE DAR NO.	68366
EFFECTIVE DATE:	9/18/2000

INEEL (Idaho National Engineering & Environmental Laboratory) BECHTEL BWXT IDAHO, LLC

INEEL
OU 3-13 GROUP 1
TANK FARM INTERIM ACTION
PHASE 1 & 2
ALIGNMENTS 1, 3, 5, & 7 PLANS

SIZE	CAGE CODE	INDEX CODE NUMBER AREA	TYPE	CL	OBJ	DWG-	REV
D		200	0100	65	090	515162	

SCALE: 1"=20.0" SHEET C-3

FWT-D1-REV 3.1

File: C-3.dwg Path: G:\OU3-13-TANKFARM\9-6-00 Layout Name: D Size ID: RDH5 Date:09/06/00 - 1:12 P.M.

REVISIONS		
REV	DESCRIPTION	EFFECTIVE DATE:

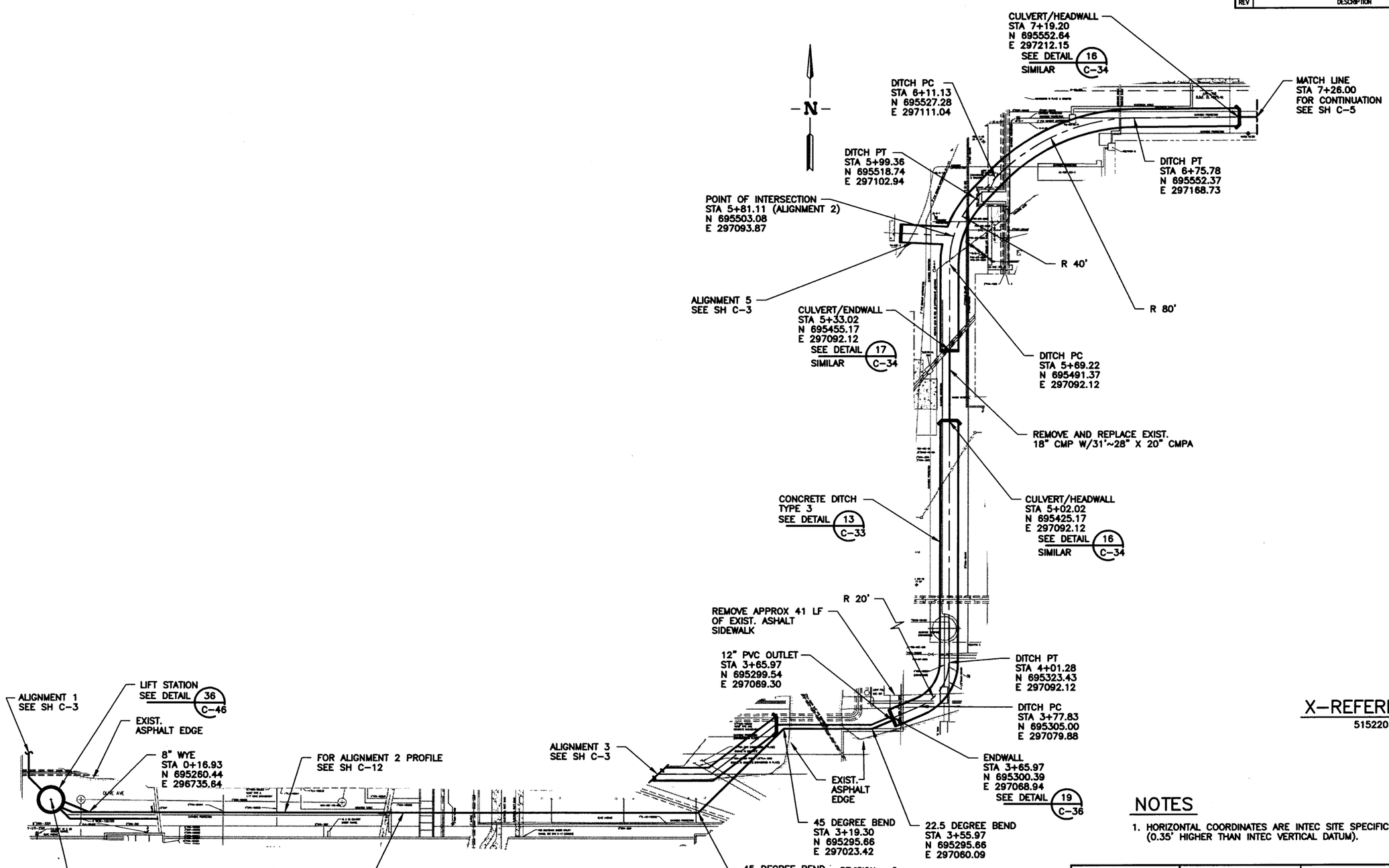

ALIGNMENT 2 PLAN

SCALE: 1"=20.0'

REF
C-1
C-3
C-9
C-32

REVISION: 0
ORIGINAL SIGNED BY: KURT D. FRITZ
DATE ORIGINAL SIGNED: 9/18/2000
SEAL NUMBER: 9404
ORIGINAL STORED AT: EROB DOCUMENT CONTROL

PROFESSIONAL ENGINEER REGISTERED 9404 STATE OF IDAHO KURT D. FRITZ

X-REFERENCE

515220

NOTES

1. HORIZONTAL COORDINATES ARE INTEC SITE SPECIFIC. VERTICAL DATUM IS NRTS (0.35' HIGHER THAN INTEC VERTICAL DATUM).

FOR DRAWING INDEX SEE DRAWING NO. 515158	SUBCONTRACT NO. S00-588051	INEEL (Idaho National Engineering & Environmental Laboratory) BECHTEL BWXT IDAHO, LLC
20' 10' 5' 0 20' SCALE: 1" = 20.0'	REQUESTER: M.S. KAPTEIN	INEEL OU 3-13 GROUP 1 TANK FARM INTERIM ACTION PHASE 1 & 2 ALIGNMENT 2 PLAN (1 OF 2)
	DESIGN: KURT FRITZ	
	DRAWN: ROB HERGESHEIMER	
	PROJECT NO. 020978	
	SPEC CODE	
DESIGN PHASE: AFC	FOR REVIEW/APPROVAL SIGNATURES SEE DAR NO. 68366	SIZE D; CAGE CODE; INDEX CODE NUMBER AREA 200 TYPE 0100 CL 65 ORG 090; DWG-515163; REV
QUALITY LEVEL: 3	EFFECTIVE DATE: 9/18/2000	SCALE: 1"=20'.0"; SHEET C-4

FWT-01-REV 3.1
File: C-4.DWG Path: G:\OU3-13-TANKFARM\8-6-00 ID: RDH5 Layout Name: D Size A Date:Wed 8/9/00 - 2:07 P.M.

REVISIONS		
REV	DESCRIPTION	EFFECTIVE DATE:

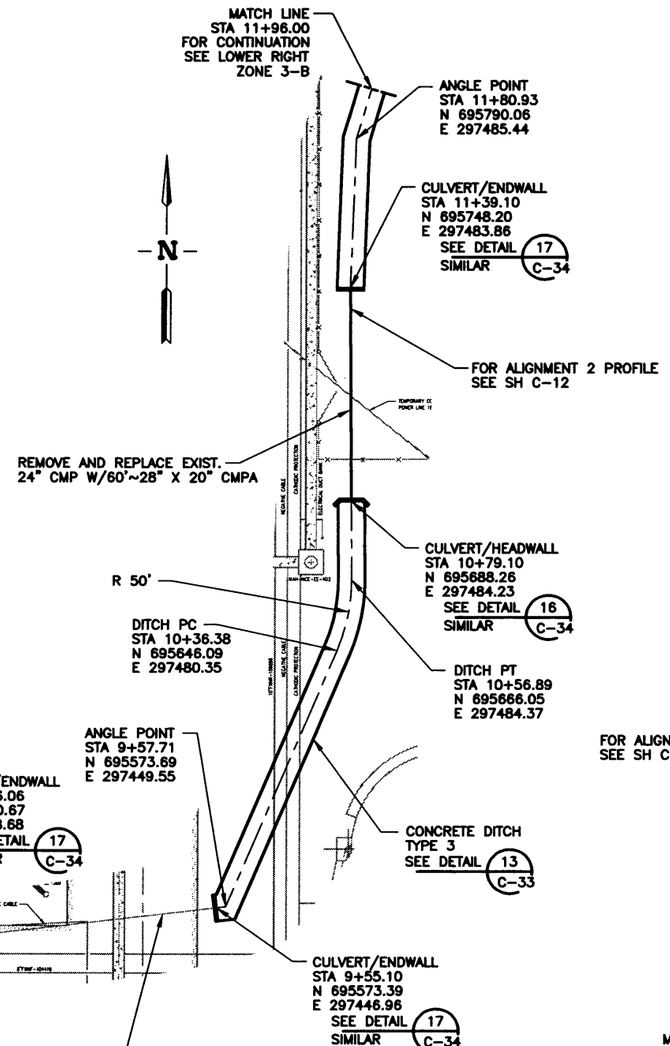

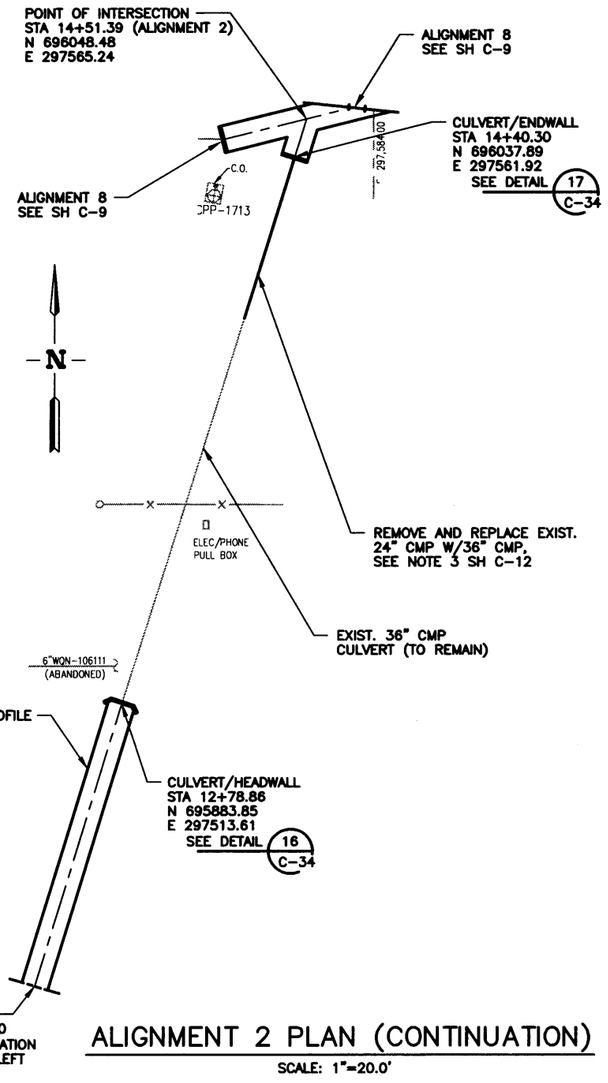

ALIGNMENT 2 PLAN (CONTINUATION)

SCALE: 1"=20.0'

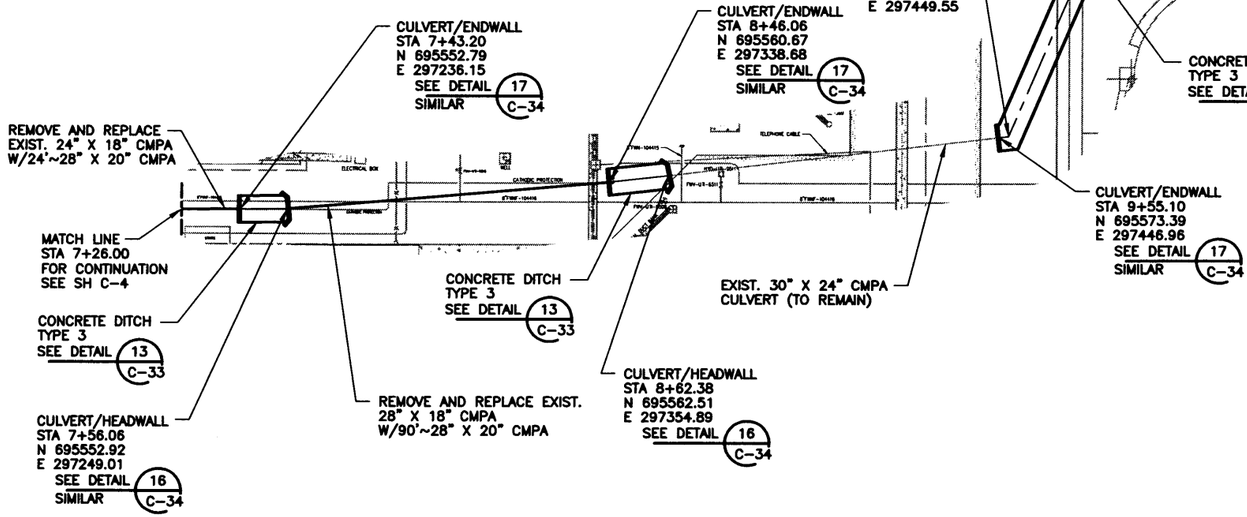

ALIGNMENT 2 PLAN (CONTINUATION)

SCALE: 1"=20.0'

REF C-1

X-REFERENCE

515220

NOTES

1. HORIZONTAL COORDINATES ARE INTEC SITE SPECIFIC. VERTICAL DATUM IS NRTS (0.35' HIGHER THAN INTEC VERTICAL DATUM).

REVISION: 0
ORIGINAL SIGNED BY: KURT D. FRITZ
DATE ORIGINAL SIGNED: 9/18/2000
SEAL NUMBER: 9404
ORIGINAL STORED AT: EROB DOCUMENT CONTROL

PROFESSIONAL ENGINEER REGISTERED 9404 STATE OF IDAHO KURT D. FRITZ

FOR DRAWING INDEX SEE DRAWING NO. 515158	SUBCONTRACT NO. S00-588051
20' 10' 5' 0 20' SCALE: 1" = 20.0'	REQUESTER: M.S. KAPTEIN
	DESIGN: KURT FRITZ
	DRAWN: ROB HERGESHEIMER
	PROJECT NO. 020978
	SPEC CODE
DESIGN PHASE: AFC	FOR REVIEW/APPROVAL SIGNATURES SEE DAR NO. 68366
QUALITY LEVEL: 3	EFFECTIVE DATE: 9/18/2000

INEEL (Idaho National Engineering & Environmental Laboratory) BECHTEL BWXT IDAHO, LLC

INEEL
OU 3-13 GROUP 1
TANK FARM INTERIM ACTION
PHASE 1 & 2
ALIGNMENT 2 PLAN (2 OF 2)

SIZE	CAGE CODE	INDEX CODE NUMBER AREA	TYPE	CL	ORIG	DWG-515164	REV
D		200	0100	65	090		

SCALE: 1"=20.0' SHEET C-5

FMT-D1-REV 3.1

File: C-5.DWG ID: RDH5
Path: G:\OU3-13-TANKFARM\9-6-00 Layout Name: D Size
Date:09/06/00 - 2:35 P.M.

REVISIONS		
REV	DESCRIPTION	EFFECTIVE DATE:

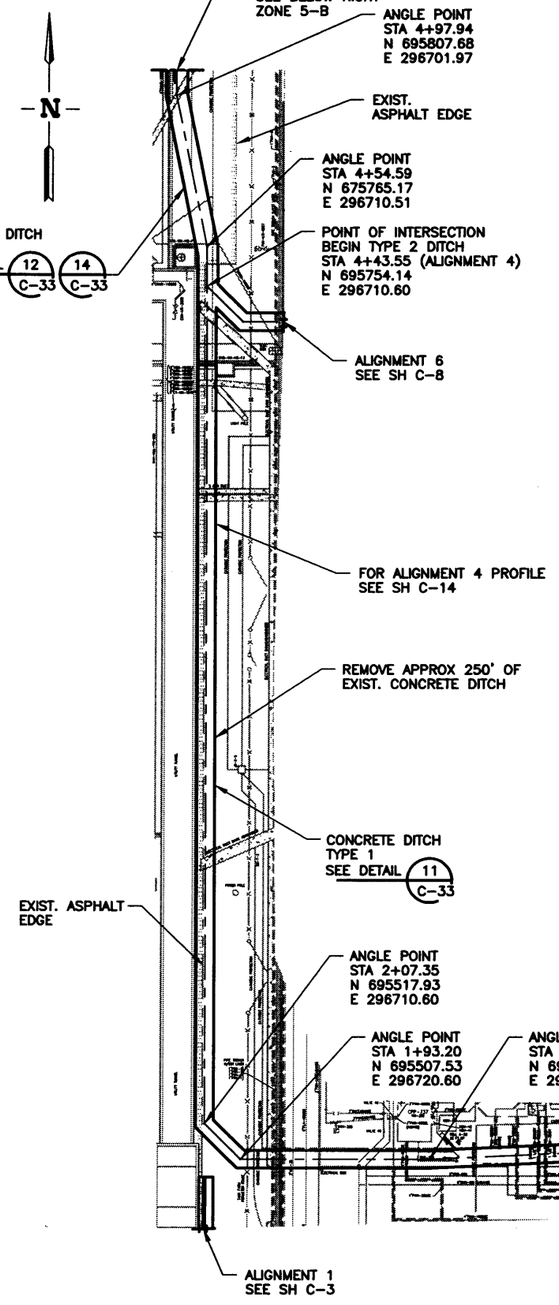

ALIGNMENT 4 PLAN

REF C-1 C-29 C-8 C-30

SCALE: 1"=20.0'

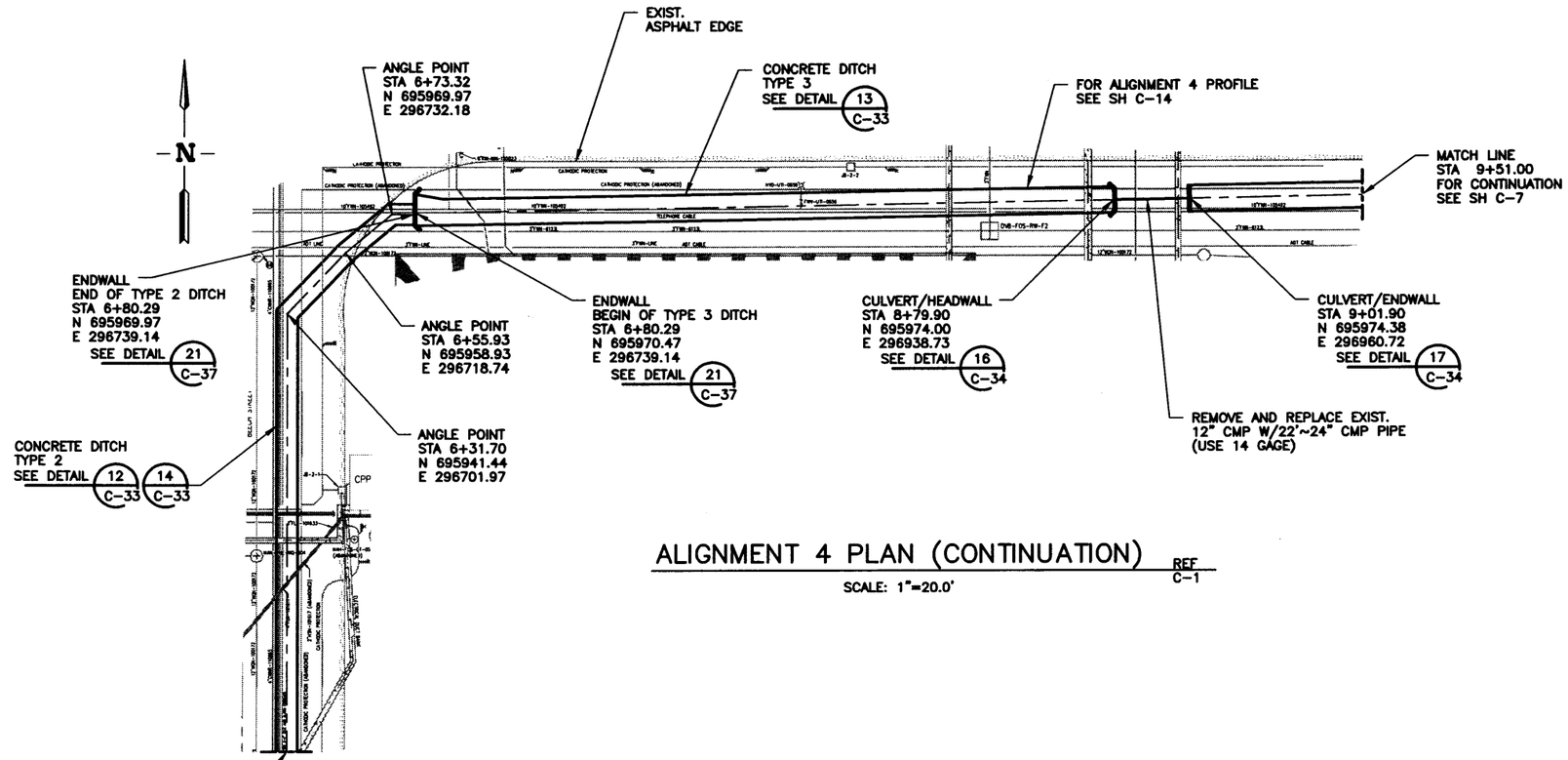

ALIGNMENT 4 PLAN (CONTINUATION)

REF C-1

SCALE: 1"=20.0'

X-REFERENCE

515220

NOTES

1. HORIZONTAL COORDINATES ARE INTEC SITE SPECIFIC. VERTICAL DATUM IS NRTS (0.35' HIGHER THAN INTEC VERTICAL DATUM).

REVISION: 0
ORIGINAL SIGNED BY: KURT D. FRITZ
DATE ORIGINAL SIGNED: 9/18/2000
SEAL NUMBER: 9404
ORIGINAL STORED AT: EROB DOCUMENT CONTROL

PROFESSIONAL ENGINEER REGISTERED 9404 STATE OF IDAHO KURT D. FRITZ

FOR DRAWING INDEX SEE DRAWING NO.	515158
SCALE: 1" = 20.0'	
DESIGN PHASE:	AFC
QUALITY LEVEL:	3

SUBCONTRACT NO.	S00-588051
REQUESTER:	M.S. KAPTEIN
DESIGN:	KURT FRITZ
DRAWN:	ROB HERGESHEIMER
PROJECT NO.	020978
SPEC CODE	
FOR REVIEW/APPROVAL SIGNATURES SEE DAR NO. 68366	
EFFECTIVE DATE:	9/18/2000

INEEL Idaho National Engineering & Environmental Laboratory BECHTEL BWXT IDAHO, LLC

INEEL
OU 3-13 GROUP 1
TANK FARM INTERIM ACTION
PHASE 1 & 2
ALIGNMENT 4 PLAN (1 OF 2)

SIZE	CAGE CODE	INDEX CODE NUMBER AREA	TYPE	CL	ORG	DWG-	REV
D		200	0100	65	090	515165	

SCALE: 1"=20.0' SHEET C-6

FNT-01-REV 3.2

File: C-6.DWG ID: RDH5 Layout Name: D Size
Path: G:\OU3-13-TANKFARM\9-6-00 Date: 09/06/00 - 2:39 P.M.

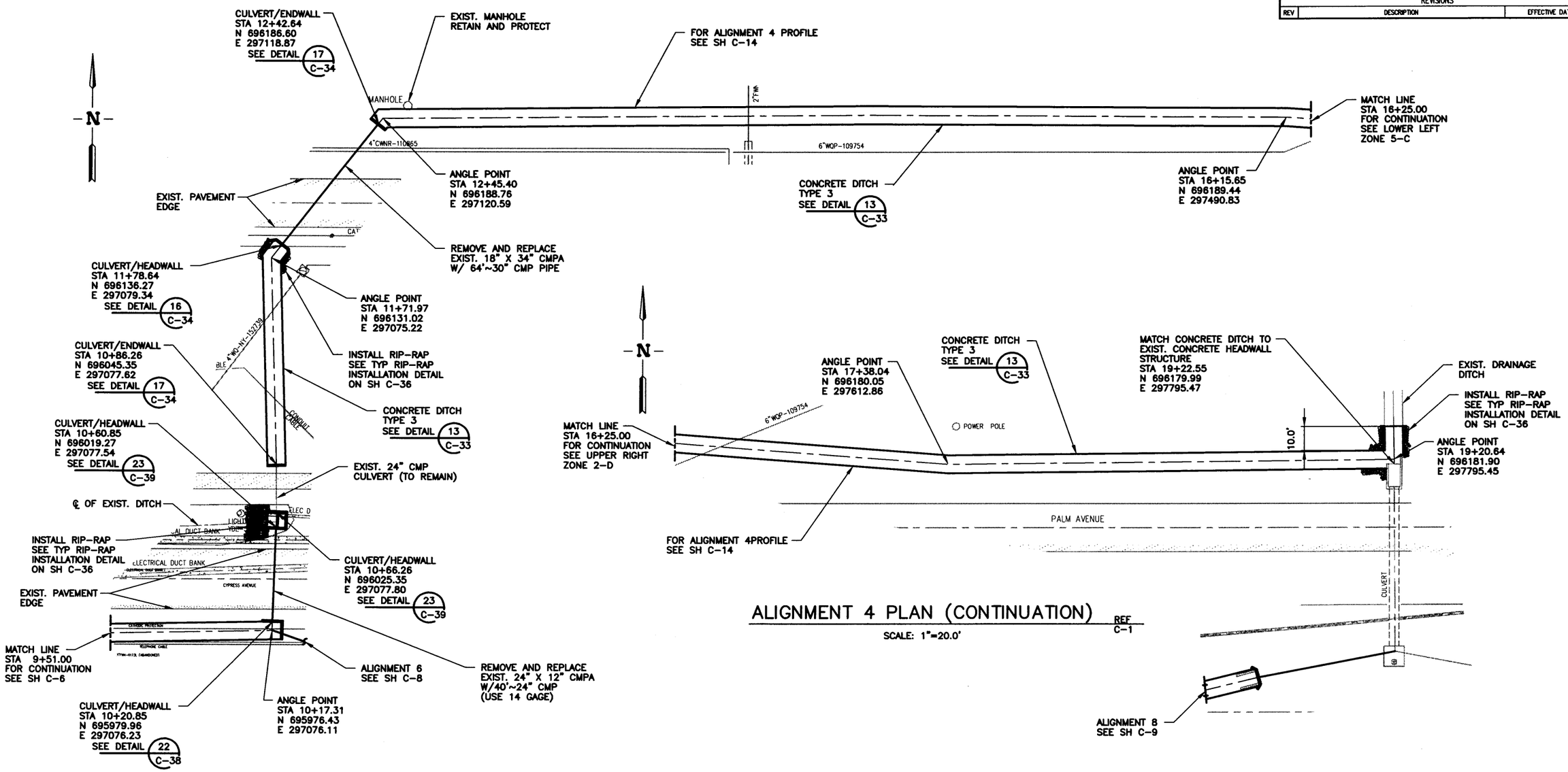

ALIGNMENT 4 PLAN (CONTINUATION) REF C-1

SCALE: 1"=20.0'

ALIGNMENT 4 PLAN (CONTINUATION) REF C-1 C-29

SCALE: 1"=20.0'

X-REFERENCE

515220

NOTES

1. HORIZONTAL COORDINATES ARE INTEC SITE SPECIFIC. VERTICAL DATUM IS NRTS (0.35' HIGHER THAN INTEC VERTICAL DATUM).

REVISION: 0
ORIGINAL SIGNED BY: KURT D. FRITZ
DATE ORIGINAL SIGNED: 9/18/2000
SEAL NUMBER: 9404
ORIGINAL STORED AT: EROB DOCUMENT CONTROL

PROFESSIONAL ENGINEER REGISTERED 9404 STATE OF IDAHO KURT D. FRITZ

FOR DRAWING INDEX SEE DRAWING NO. 515158	SUBCONTRACT NO. S00-588051	INEEL Idaho National Engineering & Environmental Laboratory BECHTEL BWXT IDAHO, LLC
SCALE: 1" = 20.0'	REQUESTER: M.S. KAPTEIN	INEEL OU 3-13 GROUP 1 TANK FARM INTERIM ACTION PHASE 1 & 2 ALIGNMENT 4 PLAN (2 OF 2)
	DESIGN: KURT FRITZ	
	DRAWN: ROB HERGESHEIMER	
	PROJECT NO. 020978	
	SPEC CODE	
DESIGN PHASE: AFC	FOR REVIEW/APPROVAL SIGNATURES SEE DAR NO. 68366	SIZE D; CAGE CODE; INDEX CODE NUMBER: AREA 200, TYPE 0100, CL 65, ORIG 090; DWG-515166; REV
QUALITY LEVEL: 3	EFFECTIVE DATE: 9/18/2000	SCALE: 1"=20.0'; SHEET C-7

REVISIONS

REV	DESCRIPTION	EFFECTIVE DATE:

FMT-D1-REV 3.2

File: C-7.DWG ID: RDH5 Layout Name: D Size
Path: G:\OU3-13-TANKFARM\9-6-00 Dalleuth9/18/00 - 4:28 P.M.

REVISIONS		
REV	DESCRIPTION	EFFECTIVE DATE:

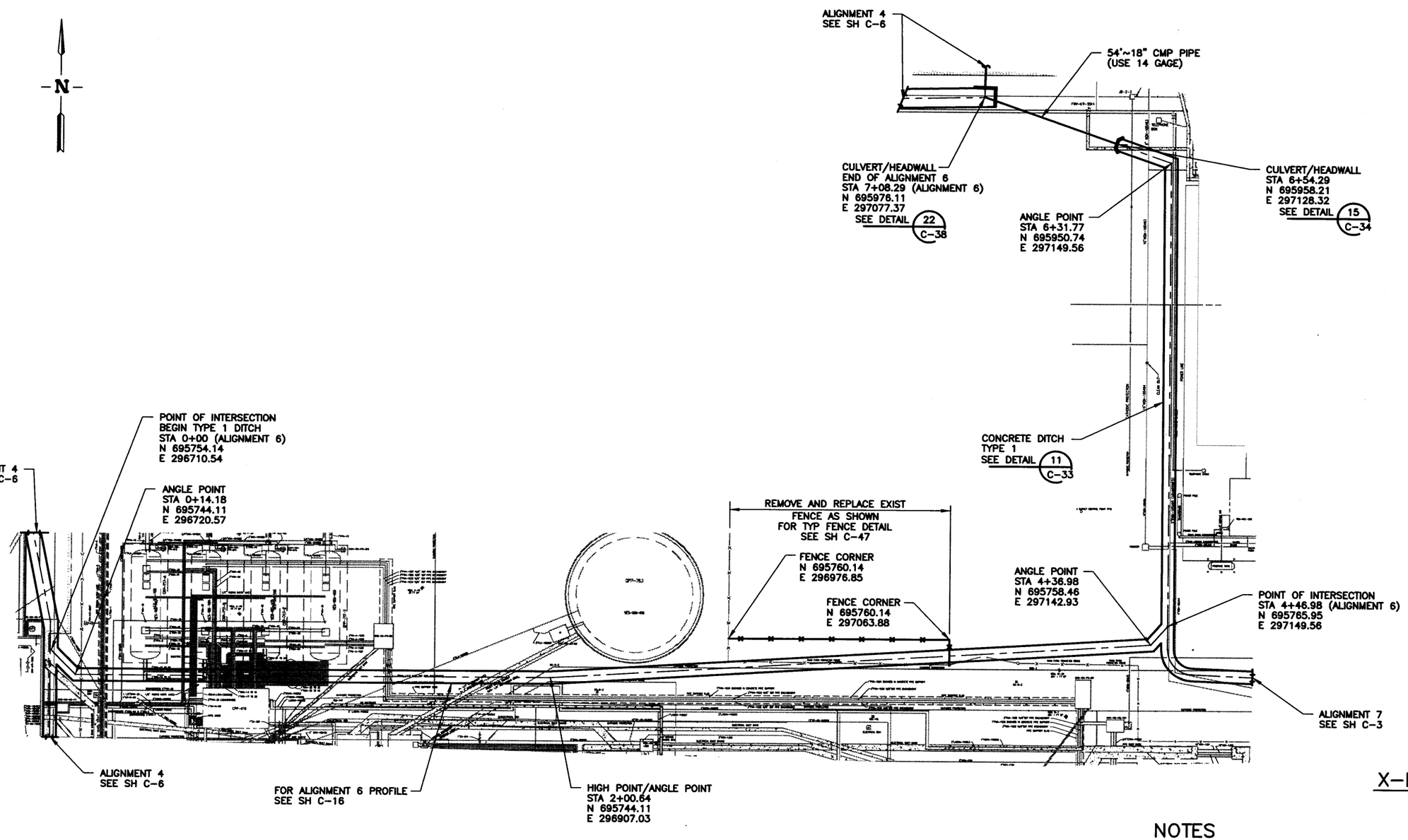

X-REFERENCE

515220

NOTES

1. HORIZONTAL COORDINATES ARE INTEC SITE SPECIFIC. VERTICAL DATUM IS NRTS (0.35' HIGHER THAN INTEC VERTICAL DATUM).

ALIGNMENT 6 PLAN

SCALE: 1"=20.0'

REF
C-1
C-6
C-7
C-29

REVISION: 0
ORIGINAL SIGNED BY: KURT D. FRITZ
DATE ORIGINAL SIGNED: 9/18/2000
SEAL NUMBER: 9404
ORIGINAL STORED AT: EROB DOCUMENT CONTROL

PROFESSIONAL ENGINEER REGISTERED 9404 STATE OF IDAHO KURT D. FRITZ

FOR DRAWING INDEX SEE DRAWING NO. 515158	SUBCONTRACT NO. S00-588051	INEEL Idaho National Engineering & Environmental Laboratory BECHTEL BWXT IDAHO, LLC
20' 10' 5' 0 20' SCALE: 1" = 20.0'	REQUESTER: M.S. KAPTEIN	INEEL OU 3-13 GROUP 1 TANK FARM INTERIM ACTION PHASE 1 & 2 ALIGNMENT 6 PLAN
	DESIGN: KURT FRITZ	
	DRAWN: ROB HERGESHEIMER	
	PROJECT NO. 020978	
	SPEC CODE	
DESIGN PHASE: AFC	FOR REVIEW/APPROVAL SIGNATURES SEE DAR NO. 68366	SIZE D · CAGE CODE · INDEX CODE NUMBER AREA 200 TYPE 0100 CL 65 ORIG 090 · DWG-515167 · REV
QUALITY LEVEL: 3	EFFECTIVE DATE: 9/18/2000	SCALE: 1"=20.0" · SHEET C-8

File: C-8.DWG ID: RDH5 Layout Name: D Size
Path: G:\OU3-13-TANKFARM\9-6-00 Date: 09/18/00 - 3:07 P.M.

REVISIONS		
REV	DESCRIPTION	EFFECTIVE DATE:

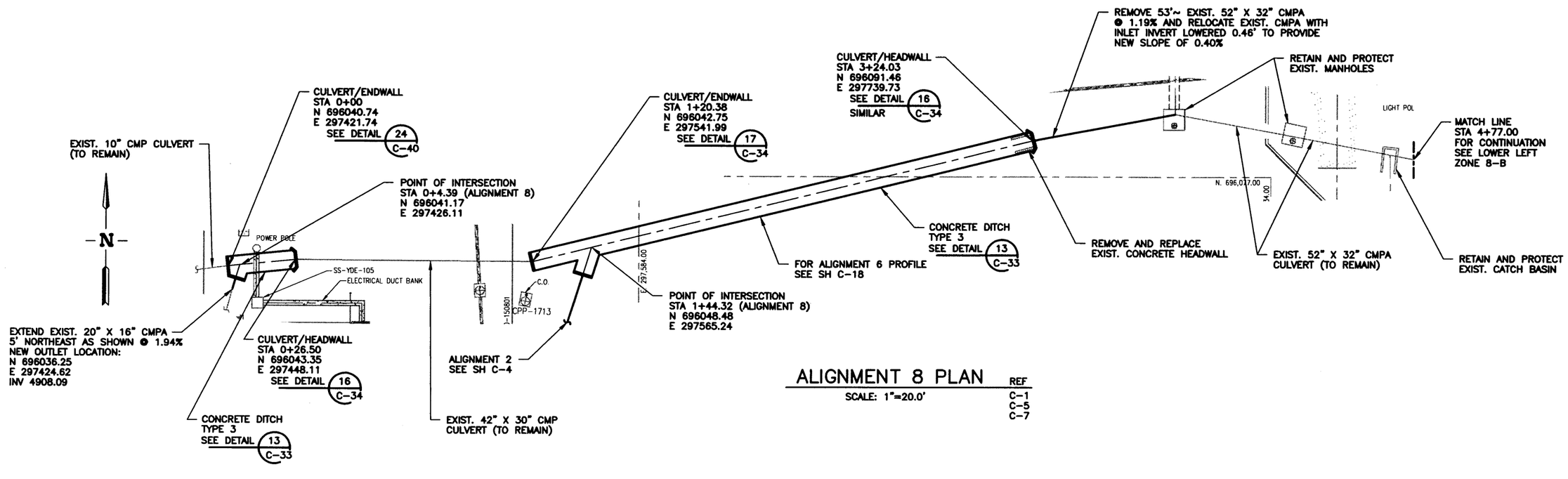

ALIGNMENT 8 PLAN

SCALE: 1"=20.0'

REF C-1 C-5 C-7

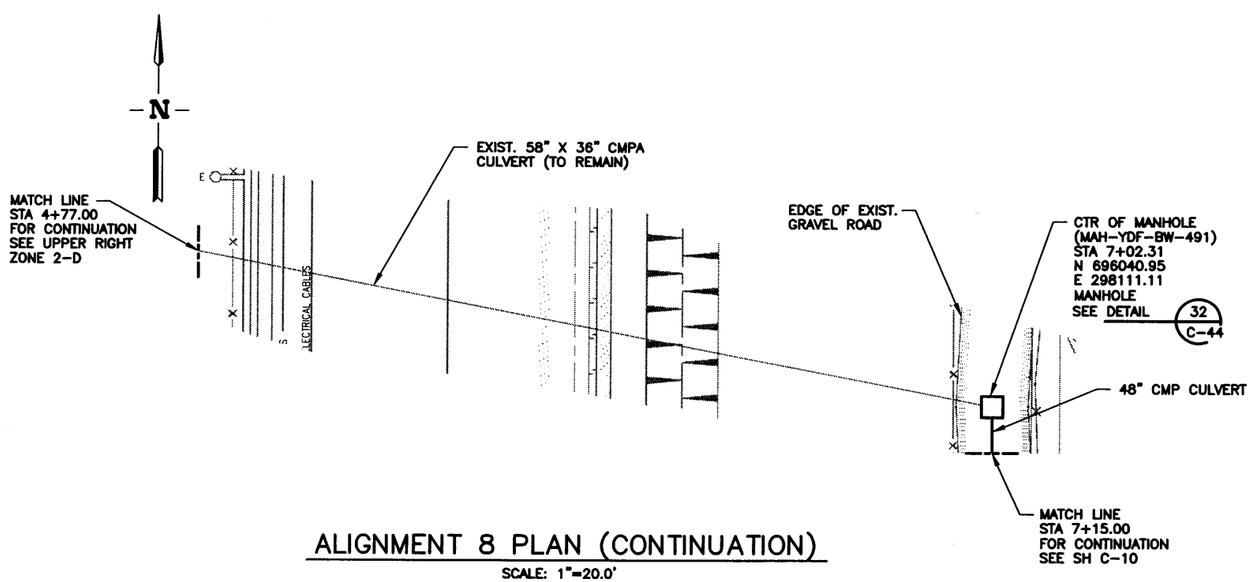

ALIGNMENT 8 PLAN (CONTINUATION)

SCALE: 1"=20.0'

X-REFERENCE

515220

NOTES

1. HORIZONTAL COORDINATES ARE INTEC SITE SPECIFIC. VERTICAL DATUM IS NRTS (0.35' HIGHER THAN INTEC VERTICAL DATUM).

REVISION: 0
ORIGINAL SIGNED BY: KURT D. FRITZ
DATE ORIGINAL SIGNED: 9/18/2000
SEAL NUMBER: 9404
ORIGINAL STORED AT: EROB DOCUMENT CONTROL

PROFESSIONAL ENGINEER REGISTERED 9404 STATE OF IDAHO KURT D. FRITZ

FOR DRAWING INDEX SEE DRAWING NO. 515158	SUBCONTRACT NO. S00-588051	INEEL Idaho National Engineering & Environmental Laboratory BECHTEL & WXT IDAHO, LLC
20' 10' 5' 0 20' SCALE: 1" = 20.0'	REQUESTER: M.S. KAPTEIN	INEEL OU 3-13 GROUP 1 TANK FARM INTERIM ACTION PHASE 1 & 2 ALIGNMENT 8 PLAN (1 OF 2)
	DESIGN: KURT FRITZ	
	DRAWN: ROB HERGESHEIMER	
	PROJECT NO. 020978	
	SPEC CODE	
DESIGN PHASE: AFC	FOR REVIEW/APPROVAL SIGNATURES SEE DAR NO. 68366	SIZE D · CAGE CODE · INDEX CODE NUMBER: AREA 200, TYPE 0100, CL 65, ORIG 090 · DWG-515168 · REV
QUALITY LEVEL: 3	EFFECTIVE DATE: 9/18/2000	SCALE: 1"=20'.0" · SHEET C-9

File: C-9.DWG ID: RDH5 Layout Name: D Size
Path: G:\OU3-13-TANKFARM\9-6-00 Dalsuit\9/18/00 - 3:12 P.M.

REVISIONS		
REV	DESCRIPTION	EFFECTIVE DATE:

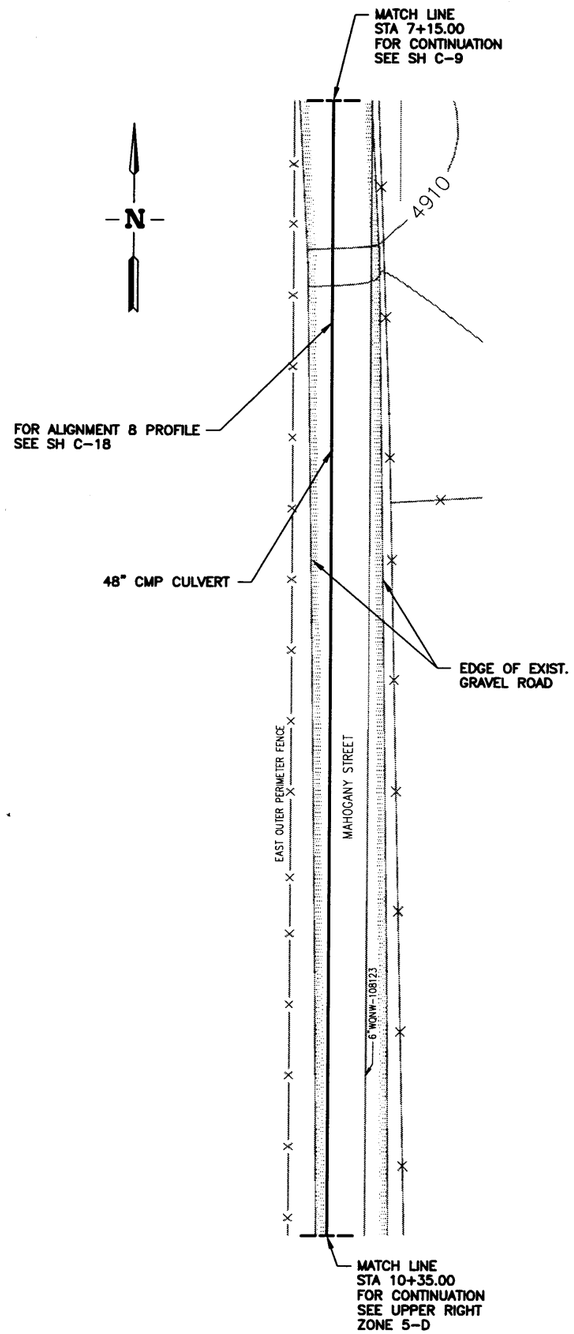

ALIGNMENT 8 PLAN (CONTINUATION)

SCALE: 1"=20.0'

REF
C-1
C-19

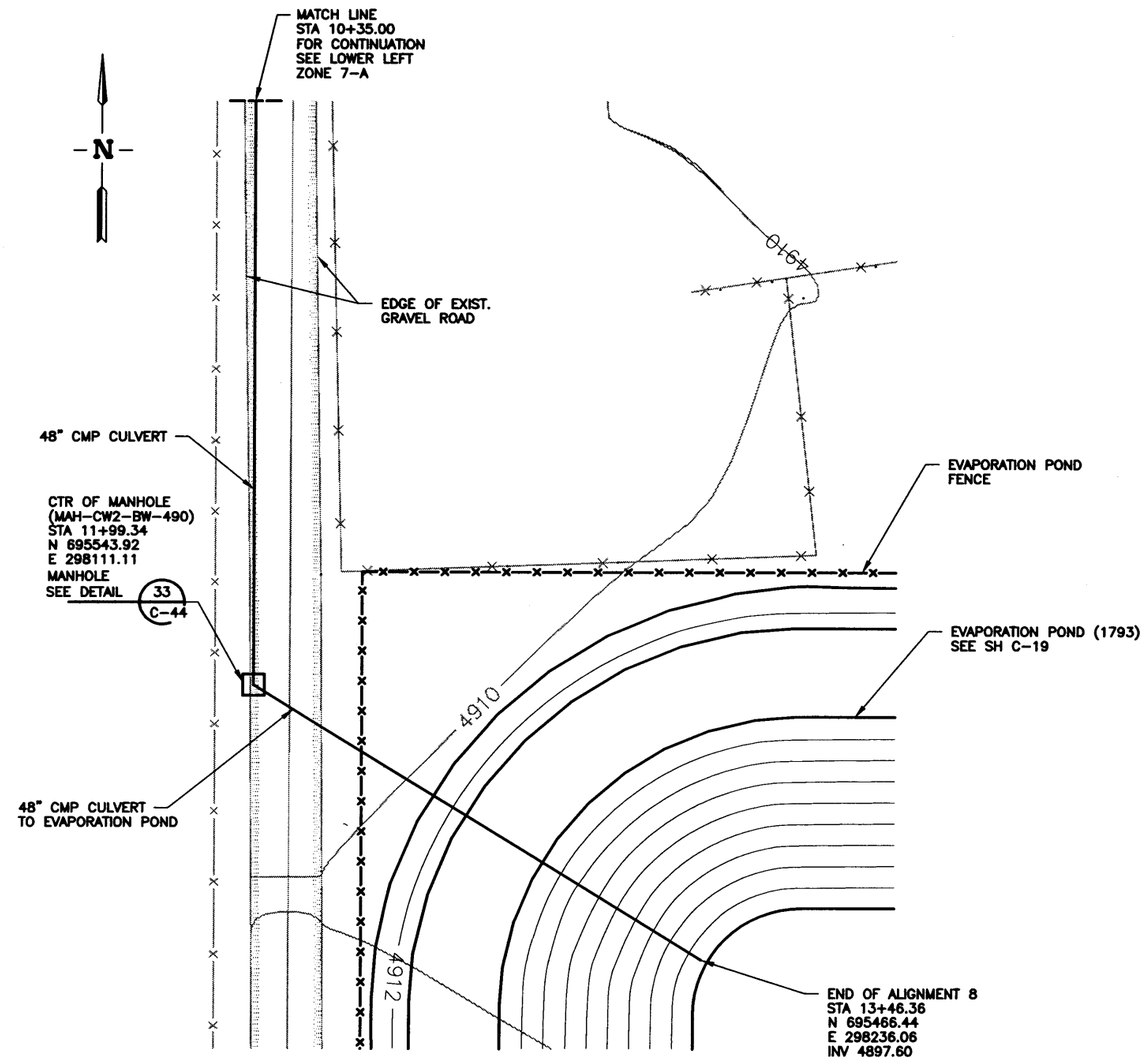

ALIGNMENT 8 PLAN (CONTINUATION)

SCALE: 1"=20.0'

X-REFERENCE
515220

NOTES

1. HORIZONTAL COORDINATES ARE INTEC SITE SPECIFIC. VERTICAL DATUM IS NRTS (0.35' HIGHER THAN INTEC VERTICAL DATUM).

REVISION: 0
ORIGINAL SIGNED BY: KURT D. FRITZ
DATE ORIGINAL SIGNED: 9/18/2000
SEAL NUMBER: 9404
ORIGINAL STORED AT: EROB DOCUMENT CONTROL

PROFESSIONAL ENGINEER REGISTERED 9404 STATE OF IDAHO KURT D. FRITZ

FOR DRAWING INDEX SEE DRAWING NO. 515158	SUBCONTRACT NO. S00-588051
20' 10' 5' 0 20' SCALE: 1" = 20.0'	REQUESTER: M.S. KAPTEIN
	DESIGN: KURT FRITZ
	DRAWN: ROB HERGESHEIMER
	PROJECT NO. 020978
	SPEC CODE
	FOR REVIEW/APPROVAL SIGNATURES SEE DAR NO. 68366
DESIGN PHASE: AFC	EFFECTIVE DATE: 9/18/2000
QUALITY LEVEL: 3	

INEEL (Idaho National Engineering & Environmental Laboratory) BECHTEL BWXT IDAHO, LLC

INEEL
OU 3-13 GROUP 1
TANK FARM INTERIM ACTION
PHASE 1 & 2
ALIGNMENT 8 PLAN (2 OF 2)

SIZE	CAGE CODE	INDEX CODE NUMBER AREA	TYPE	Q.	ORIG	DWG-515169	REV
D		200	0100	65	090		

SCALE: 1"=20'.0" SHEET C-10

REVISIONS		
REV	DESCRIPTION	EFFECTIVE DATE:

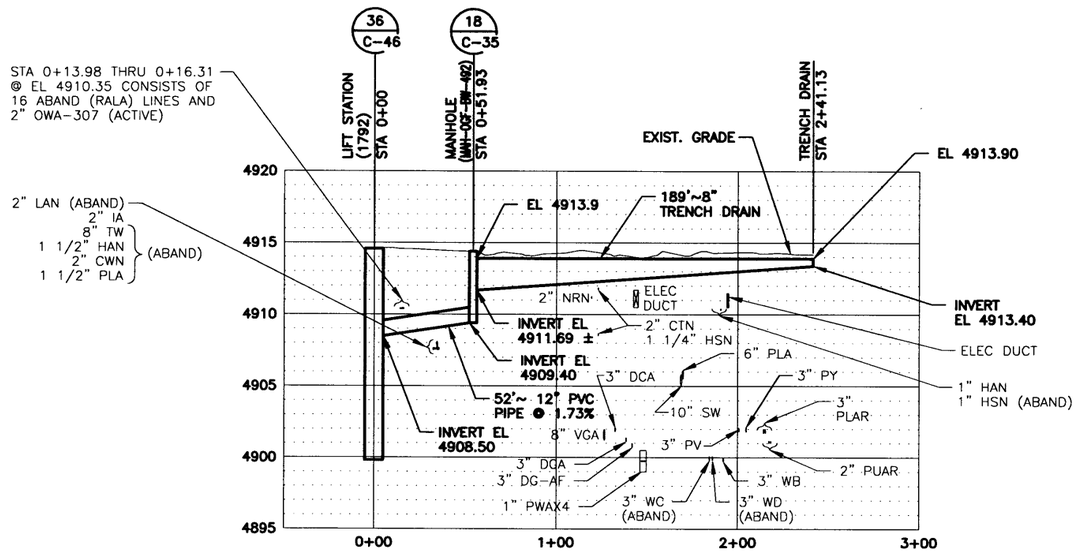

ALIGNMENT 1 PROFILE

SCALE: HOR 1"=40'
VER 1"=5'

REF
C-1
C-3

NOTES

1. ELEVATIONS AND LOCATIONS OF ELECTRICAL DUCT BANKS AND PIPES SHOWN SHADED ARE APPROXIMATE ELEVATIONS AND LOCATIONS ONLY.
2. HORIZONTAL COORDINATES ARE INTEC SITE SPECIFIC. VERTICAL DATUM IS NRTS (0.35' HIGHER THAN INTEC VERTICAL DATUM).

REVISION: 0
ORIGINAL SIGNED BY: KURT D. FRITZ
DATE ORIGINAL SIGNED: 9/18/2000
SEAL NUMBER: 9404
ORIGINAL STORED AT: EROB DOCUMENT CONTROL

PROFESSIONAL ENGINEER REGISTERED 9404 STATE OF IDAHO KURT D. FRITZ

FOR DRAWING INDEX SEE DRAWING NO. 515158	SUBCONTRACT NO. S00-588051	INEEL (Idaho National Engineering & Environmental Laboratory) BECHTEL BWXT IDAHO, LLC
HORIZONTAL 1"=40' VERTICAL 1"=5'	REQUESTER: M.S. KAPTEIN	INEEL OU 3-13 GROUP 1 TANK FARM INTERIM ACTION PHASE 1 & 2 ALIGNMENT 1 PROFILE
	DESIGN: KURT FRITZ	
	DRAWN: ROB HERGESHEIMER	
	PROJECT NO. 020978	
	SPEC CODE	
DESIGN PHASE: AFC	FOR REVIEW/APPROVAL SIGNATURES SEE DAR NO. 68366	SIZE: D; CAGE CODE; INDEX CODE NUMBER: AREA 200, TYPE 0100, Q 02, ORG 090; DWG-515170; REV
QUALITY LEVEL: 3	EFFECTIVE DATE: 9/18/2000	SCALE: NOTED; SHEET C-11

File: C-11.DWG ID: RDH5 Drawn in Model Space
Path: G:\OU3-13-TANKFARM\9-6-00 Dallas\09/06/00 - 3:38 P.M.

REVISIONS		
REV	DESCRIPTION	EFFECTIVE DATE:

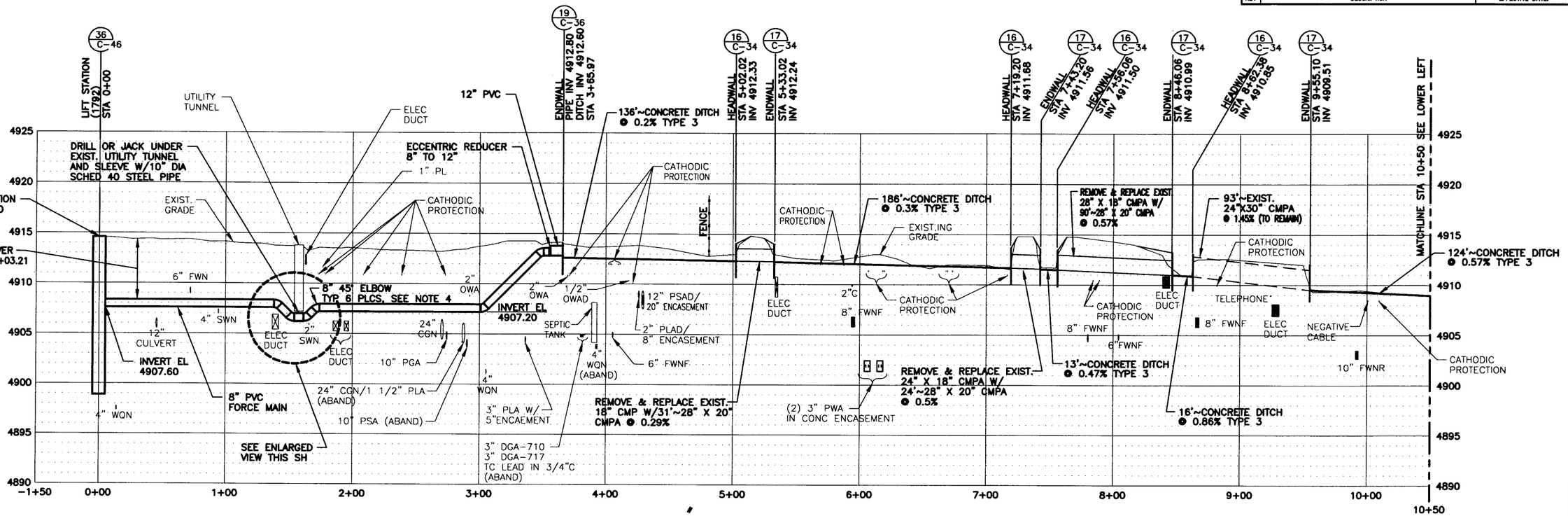

ALIGNMENT 2 PROFILE

SCALE: HOR 1"=40'
VER 1"=5'

REF
C-1
C-4
C-5

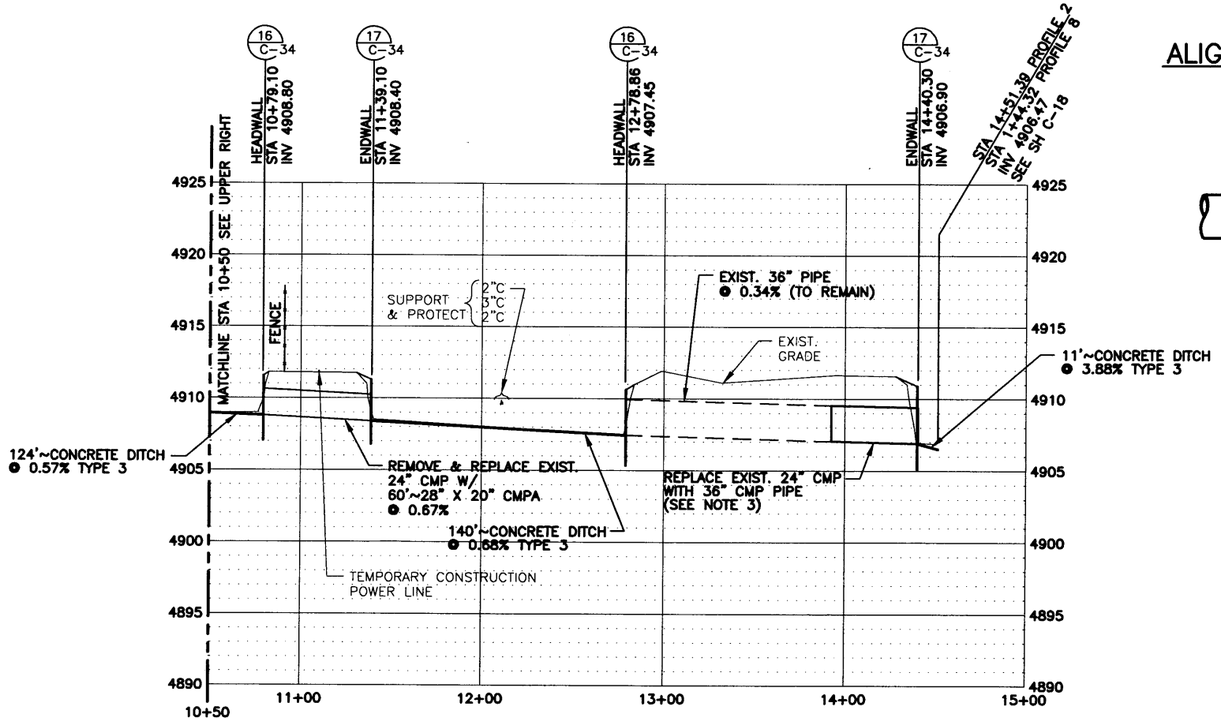

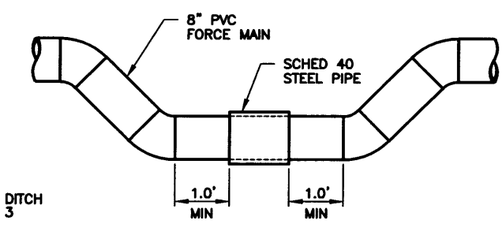

ENLARGED VIEW

NTS
SEE NOTE 4

NOTES

1. ELEVATIONS AND LOCATIONS OF ELECTRICAL DUCT BANKS AND PIPES SHOWN SHADED ARE APPROXIMATE ELEVATIONS AND LOCATIONS ONLY.
2. HORIZONTAL COORDINATES ARE INTEC SITE SPECIFIC. VERTICAL DATUM IS NRTS (0.35' HIGHER THAN INTEC VERTICAL DATUM).
3. FIELD SURVEY INDICATES NORTH END OF CULVERT IS 24" DIAMETER. FIELD VERIFY BEGINNING OF 24" DIAMETER PIPE, REMOVE AND REPLACE WITH NEW 36" DIAMETER CMP.
4. MECHANICAL JOINT RESTRAINTS ARE REQUIRED AT ALL BENDS AND AT JOINTS WITHIN 5 FEET OF BENDS.

REVISION: 0
ORIGINAL SIGNED BY: KURT D. FRITZ
DATE ORIGINAL SIGNED: 9/18/2000
SEAL NUMBER: 9404
ORIGINAL STORED AT: EROB DOCUMENT CONTROL

PROFESSIONAL ENGINEER REGISTERED 9404 STATE OF IDAHO KURT D. FRITZ

FOR DRAWING INDEX SEE DRAWING NO. 515158	SUBCONTRACT NO. S00-588051	INEEL (Idaho National Engineering & Environmental Laboratory) BECHTEL BWXT IDAHO, LLC
HORIZONTAL 1"=40' VERTICAL 1"=5'	REQUESTER: M.S. KAPTEIN DESIGN: KURT FRITZ DRAWN: ROB HERGESHEIMER PROJECT NO. 020978 SPEC CODE	INEEL OU 3-13 GROUP 1 TANK FARM INTERIM ACTION PHASE 1 & 2 ALIGNMENT 2 PROFILE
DESIGN PHASE: AFC	FOR REVIEW/APPROVAL SIGNATURES SEE DAR NO. 68366	SIZE D; CAGE CODE; INDEX CODE NUMBER AREA 200 TYPE 0100 CL 02 ORIG 090; DWG- 515171; REV
QUALITY LEVEL: 3	EFFECTIVE DATE: 9/18/2000	SCALE: NOTED; SHEET C-12

File: C-12.DWG ID: RDHS Drawn in Model Space
Path: G:\OU3-13-TANKFARM\9-6-00 Baseline\PRE/00 - 4:10 P.M.

REVISIONS		
REV	DESCRIPTION	EFFECTIVE DATE:

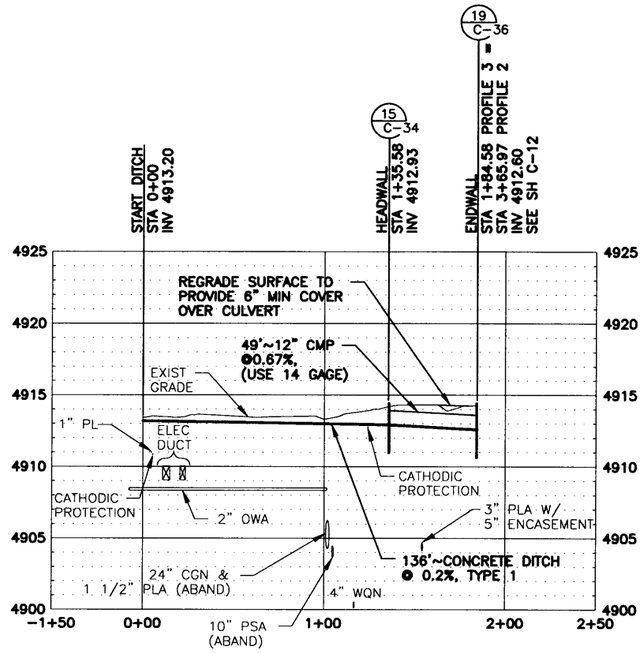

ALIGNMENT 3 PROFILE

SCALE: HOR 1"=40'
VER 1"=5'

REF
C-1
C-3

NOTES

1. ELEVATIONS AND LOCATIONS OF ELECTRICAL DUCT BANKS AND PIPES SHOWN SHADED ARE APPROXIMATE ELEVATIONS AND LOCATIONS ONLY.
2. HORIZONTAL COORDINATES ARE INTEC SITE SPECIFIC. VERTICAL DATUM IS NRTS (0.35' HIGHER THAN INTEC VERTICAL DATUM).

REVISION: 0
ORIGINAL SIGNED BY: KURT D. FRITZ
DATE ORIGINAL SIGNED: 9/18/2000
SEAL NUMBER: 9404
ORIGINAL STORED AT: EROB DOCUMENT CONTROL

PROFESSIONAL ENGINEER REGISTERED 9404 STATE OF IDAHO KURT D. FRITZ

FOR DRAWING INDEX SEE DRAWING NO. 515158	SUBCONTRACT NO. S00-588051	INEEL Idaho National Engineering & Environmental Laboratory BECHTEL BWXT IDAHO, LLC
HORIZONTAL 1"=40' VERTICAL 1"=5'	REQUESTER: M.S. KAPTEIN DESIGN: KURT FRITZ DRAWN: ROB HERGESHEIMER PROJECT NO. 020978 SPEC CODE	INEEL OU 3-13 GROUP 1 TANK FARM INTERIM ACTION PHASE 1 & 2 ALIGNMENT 3 PROFILE
DESIGN PHASE: AFC	FOR REVIEW/APPROVAL SIGNATURES SEE DAR NO. 68366	SIZE D · CAGE CODE · INDEX CODE NUMBER: AREA 200, TYPE 0100, CL 02, ORIG 090 · DWG-515172 · REV
QUALITY LEVEL: 3	EFFECTIVE DATE: 9/18/2000	SCALE: NOTED · SHEET C-13

File: C-13.DWG ID: RDH5 Drawn in Model Space
Path: G:\OU3-13-TANKFARM\9-6-00 Date: 9/18/00 - 3:36 P.M.

REVISIONS		
REV	DESCRIPTION	EFFECTIVE DATE:

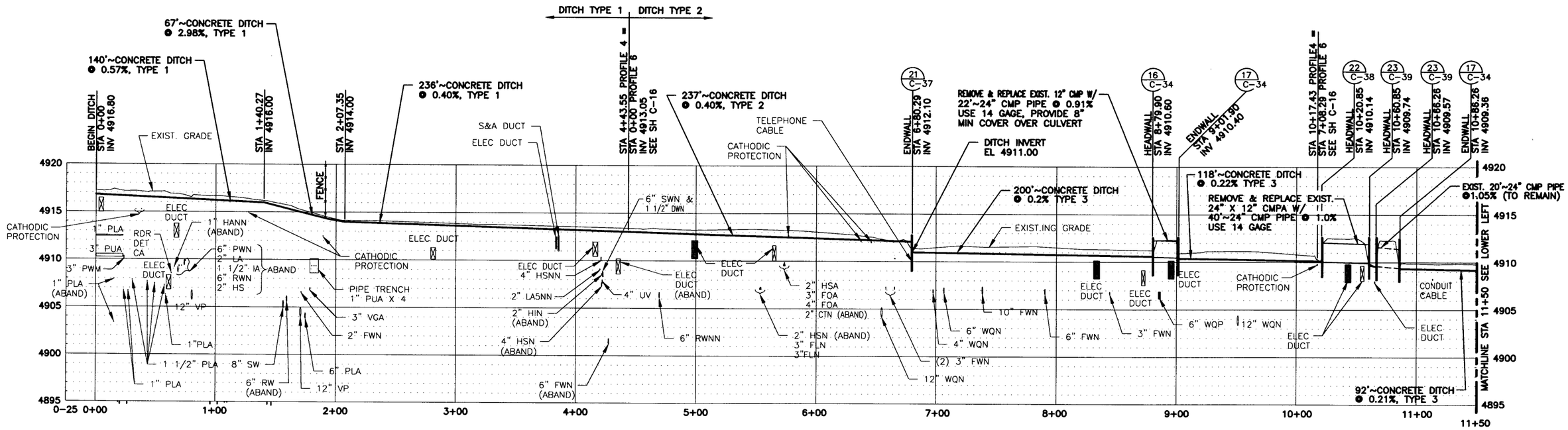

ALIGNMENT 4 PROFILE

SCALE: HOR 1"=40'
VER 1"=5'

REF
C-1
C-6
C-7
C-16

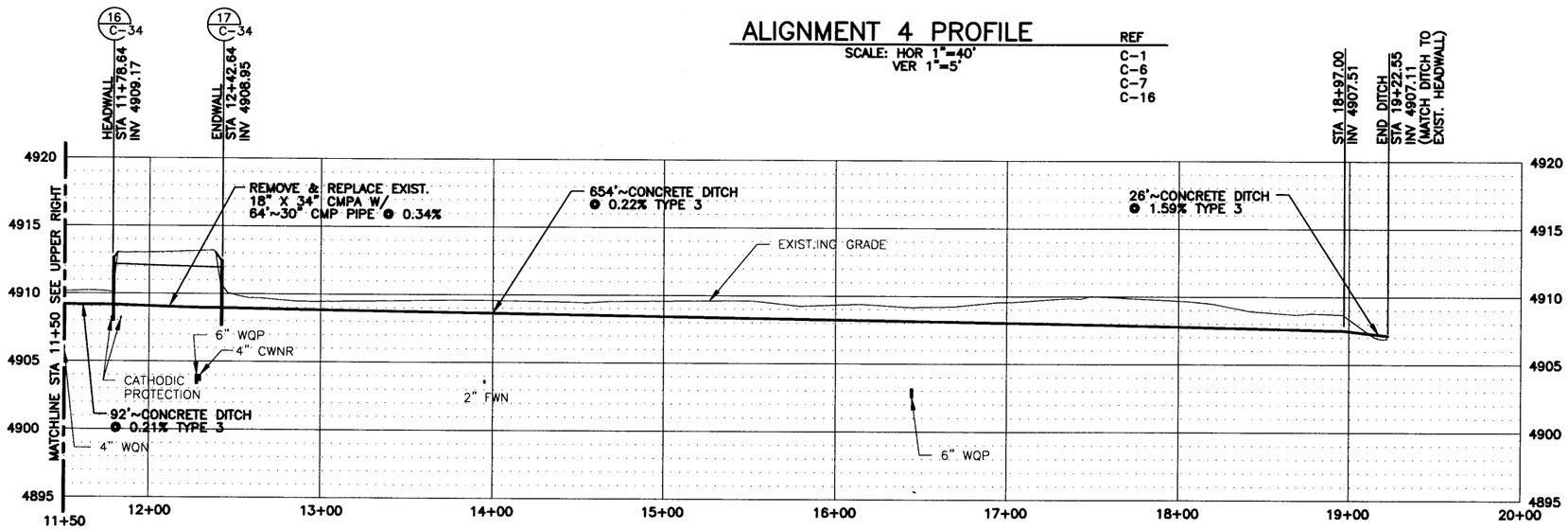

NOTES

1. ELEVATIONS AND LOCATIONS OF ELECTRICAL DUCT BANKS AND PIPES SHOWN SHADED ARE APPROXIMATE ELEVATIONS AND LOCATIONS ONLY.
2. HORIZONTAL COORDINATES ARE INTEC SITE SPECIFIC. VERTICAL DATUM IS NRTS (0.35' HIGHER THAN INTEC VERTICAL DATUM).

REVISION: 0
ORIGINAL SIGNED BY: KURT D. FRITZ
DATE ORIGINAL SIGNED: 9/18/2000
SEAL NUMBER: 9404
ORIGINAL STORED AT: EROB DOCUMENT CONTROL

PROFESSIONAL ENGINEER REGISTERED 9404 STATE OF IDAHO KURT D. FRITZ

FOR DRAWING INDEX SEE DRAWING NO. 515158	SUBCONTRACT NO. S00-588051	INEEL (Idaho National Engineering & Environmental Laboratory) BECHTEL BWXT IDAHO, LLC
HORIZONTAL 1"=40'	REQUESTER: M.S. KAPTEIN	INEEL OU 3-13 GROUP 1 TANK FARM INTERIM ACTION PHASE 1 & 2 ALIGNMENT 4 PROFILE
VERTICAL 1"=5'	DESIGN: KURT FRITZ	
	DRAWN: ROB HERGESHEIMER	
	PROJECT NO. 020978	
	SPEC CODE	
DESIGN PHASE: AFC	FOR REVIEW/APPROVAL SIGNATURES SEE DAR NO. 68366	SIZE D; CAGE CODE; INDEX CODE NUMBER AREA 200 TYPE 0100 CL 02 ORG 090; DWG-515173; REV
QUALITY LEVEL: 3	EFFECTIVE DATE: 9/18/2000	SCALE: NOTED; SHEET C-14

File: C-14.DWG ID: RDH5 Drawn in Model Space
Path: G:\OU3-13-TANKFARM\9-6-00 Default@9/18/00 - 3:42 P.M.

REVISIONS		
REV	DESCRIPTION	EFFECTIVE DATE:

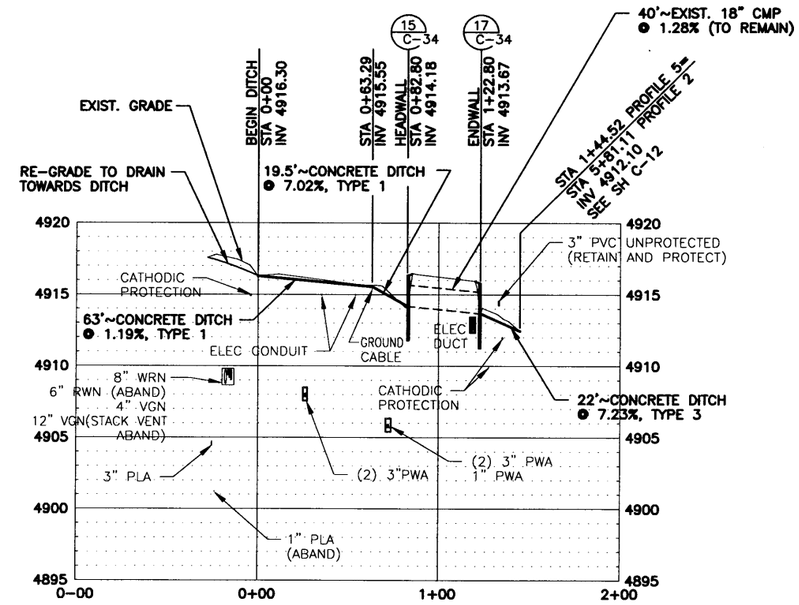

ALIGNMENT 5 PROFILE

SCALE: HOR 1"=40'
VER 1"=5'

REF
C-1
C-3

NOTES

1. ELEVATIONS AND LOCATIONS OF ELECTRICAL DUCT BANKS AND PIPES SHOWN SHADED ARE APPROXIMATE ELEVATIONS AND LOCATIONS ONLY.
2. HORIZONTAL COORDINATES ARE INTEC SITE SPECIFIC. VERTICAL DATUM IS NRTS (0.35' HIGHER THAN INTEC VERTICAL DATUM).

REVISION: 0
ORIGINAL SIGNED BY: KURT D. FRITZ
DATE ORIGINAL SIGNED: 9/18/2000
SEAL NUMBER: 9404
ORIGINAL STORED AT: EROB DOCUMENT CONTROL

PROFESSIONAL ENGINEER REGISTERED 9404 STATE OF IDAHO KURT D. FRITZ

FOR DRAWING INDEX SEE DRAWING NO. 515158	SUBCONTRACT NO. S00-588051	INEEL Idaho National Engineering & Environmental Laboratory BECHTEL BWXT IDAHO, LLC
HORIZONTAL 1"=40' VERTICAL 1"=5'	REQUESTER: M.S. KAPTEIN DESIGN: KURT FRITZ DRAWN: ROB HERGESHEIMER PROJECT NO. 020978 SPEC CODE	INEEL OU 3-13 GROUP 1 TANK FARM INTERIM ACTION PHASE 1 & 2 ALIGNMENT 5 PROFILE
DESIGN PHASE: AFC	FOR REVIEW/APPROVAL SIGNATURES SEE DAR NO. 68366	SIZE D · CAGE CODE · INDEX CODE NUMBER: AREA 200, TYPE 0100, CL 02, ORIG 090 · DWG-515174 · REV
QUALITY LEVEL: 3	EFFECTIVE DATE: 9/18/2000	SCALE: NOTED · SHEET C-15

File: C-15.DWG ID: RDH5 Drawn in Model Space
Path: G:\OU3-13-TANKFARM\9-6-00 Bailey\09/18/00 - 3:45 P.M.

REVISIONS		
REV	DESCRIPTION	EFFECTIVE DATE:

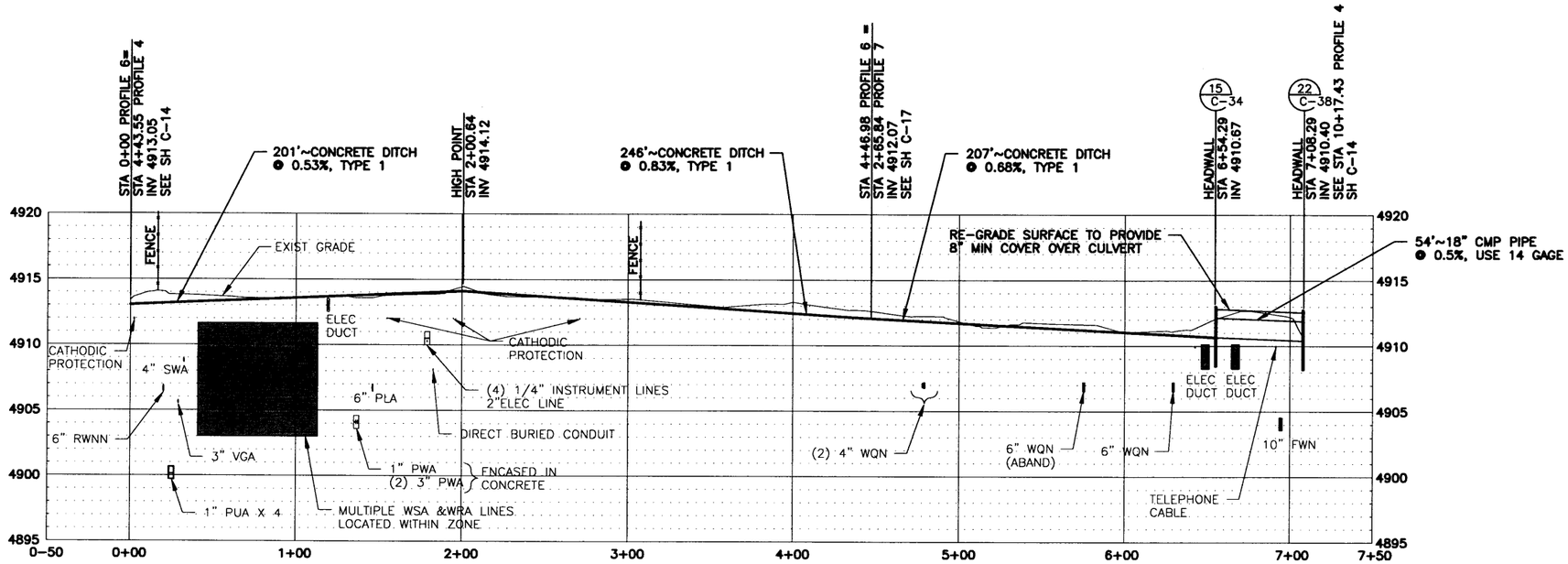

ALIGNMENT 6 PROFILE

SCALE: HOR 1"=40'
VER 1"=5'

REF
C-1
C-8
C-14
C-17

NOTES

1. ELEVATIONS AND LOCATIONS OF ELECTRICAL DUCT BANKS AND PIPES SHOWN SHADED ARE APPROXIMATE ELEVATIONS AND LOCATIONS ONLY.
2. HORIZONTAL COORDINATES ARE INTEC SITE SPECIFIC. VERTICAL DATUM IS NRTS (0.35' HIGHER THAN INTEC VERTICAL DATUM).

REVISION: 0
ORIGINAL SIGNED BY: KURT D. FRITZ
DATE ORIGINAL SIGNED: 9/18/2000
SEAL NUMBER: 9404
ORIGINAL STORED AT: EROB DOCUMENT CONTROL

PROFESSIONAL ENGINEER REGISTERED 9404 STATE OF IDAHO KURT D. FRITZ

FOR DRAWING INDEX SEE DRAWING NO. 515158	SUBCONTRACT NO. S00-588051	INEEL (Idaho National Engineering & Environmental Laboratory) BECHTEL BWXT IDAHO, LLC	
HORIZONTAL 1"=40' VERTICAL 1"=5'	REQUESTER: M.S. KAPTEIN	INEEL OU 3-13 GROUP 1 TANK FARM INTERIM ACTION PHASE 1 & 2 ALIGNMENT 6 PROFILE	
	DESIGN: KURT FRITZ		
	DRAWN: ROB HERGESHEIMER		
	PROJECT NO. 020978		
	SPEC CODE		
DESIGN PHASE: AFC	FOR REVIEW/APPROVAL SIGNATURES SEE DAR NO. 68366	SIZE D / CAGE CODE / INDEX CODE NUMBER AREA 200 TYPE 0100 G 02 ORG 090	DWG-515175 REV
QUALITY LEVEL: 3	EFFECTIVE DATE: 9/18/2000	SCALE: NOTED	SHEET C-16

File: C-16.DWG
Path: G:\OU3-13-TANKFARM\9-6-00
ID: RDH5
Drawn in Model Space
Date: 09/06/00 - 3:46 P.M.

REVISIONS		
REV	DESCRIPTION	EFFECTIVE DATE:

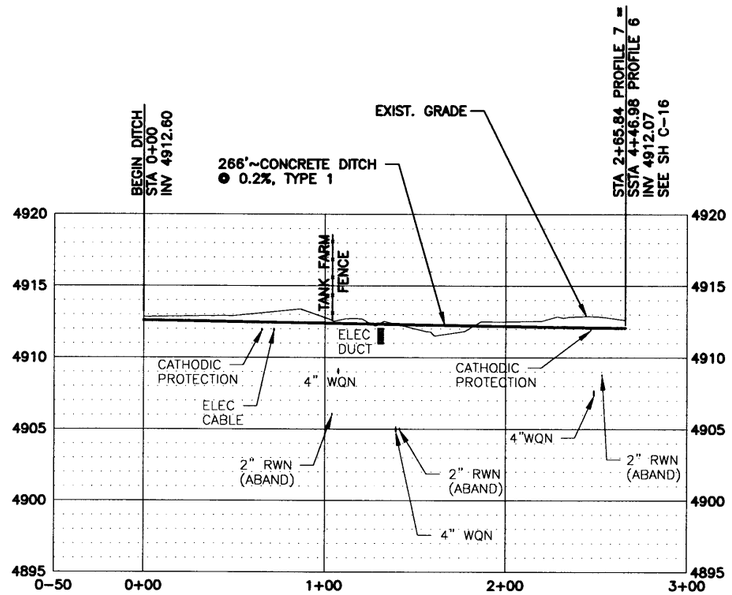

ALIGNMENT 7 PROFILE

SCALE: HOR 1"=40'
VER 1"=5'

REF
C-1
C-3
C-16

NOTES

1. ELEVATIONS AND LOCATIONS OF ELECTRICAL DUCT BANKS AND PIPES SHOWN SHADED ARE APPROXIMATE ELEVATIONS AND LOCATIONS ONLY. [redacted]
2. HORIZONTAL COORDINATES ARE INTEC SITE SPECIFIC. VERTICAL DATUM IS NRTS (0.35' HIGHER THAN INTEC VERTICAL DATUM).

REVISION: 0
ORIGINAL SIGNED BY: KURT D. FRITZ
DATE ORIGINAL SIGNED: 9/18/2000
SEAL NUMBER: 9404
ORIGINAL STORED AT: EROB DOCUMENT CONTROL

PROFESSIONAL ENGINEER REGISTERED 9404 STATE OF IDAHO KURT D. FRITZ

FOR DRAWING INDEX SEE DRAWING NO. 515158	SUBCONTRACT NO. S00-588051	INEEL (Idaho National Engineering & Environmental Laboratory) BECHTEL BWXT IDAHO, LLC	
HORIZONTAL 1"=40'	REQUESTER: M.S. KAPTEIN	INEEL OU 3-13 GROUP 1 TANK FARM INTERIM ACTION PHASE 1 & 2 ALIGNMENT 7 PROFILE	
VERTICAL 1"=5'	DESIGN: KURT FRITZ		
	DRAWN: ROB HERGESHEIMER		
	PROJECT NO. 020978		
	SPEC CODE		
DESIGN PHASE: AFC	FOR REVIEW/APPROVAL SIGNATURES SEE DAR NO. 68366	SIZE D / CAGE CODE / INDEX CODE NUMBER AREA 200 TYPE 0100 CL 02 ORG 090	DWG-515176 REV
QUALITY LEVEL: 3	EFFECTIVE DATE: 9/18/2000	SCALE: NOTED	SHEET C-17

File: C-17.DWG ID: RDH5 Drawn in Model Space
Path: G:\OU3-13-TANKFARM\9-6-00 Dallas\89\RH6/00 - 3:48 P.M.

REVISIONS		
REV	DESCRIPTION	EFFECTIVE DATE:

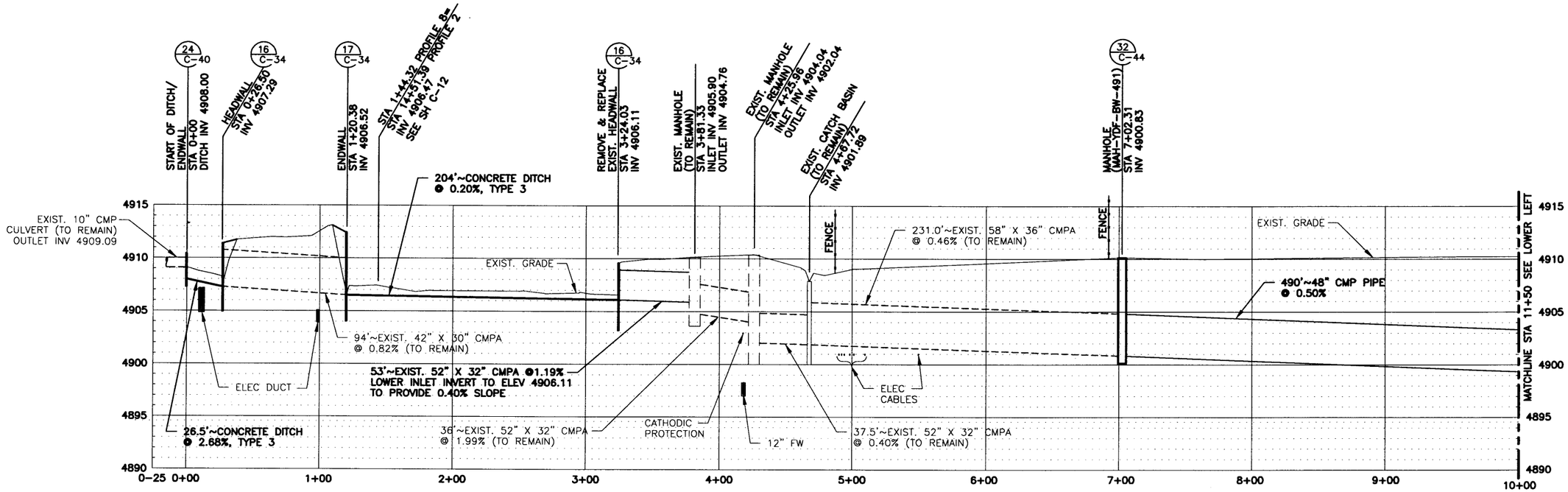

ALIGNMENT 8 PROFILE

SCALE: HOR 1"=40'
VER 1"=5'

REF
C-1
C-9
C-10
C-12

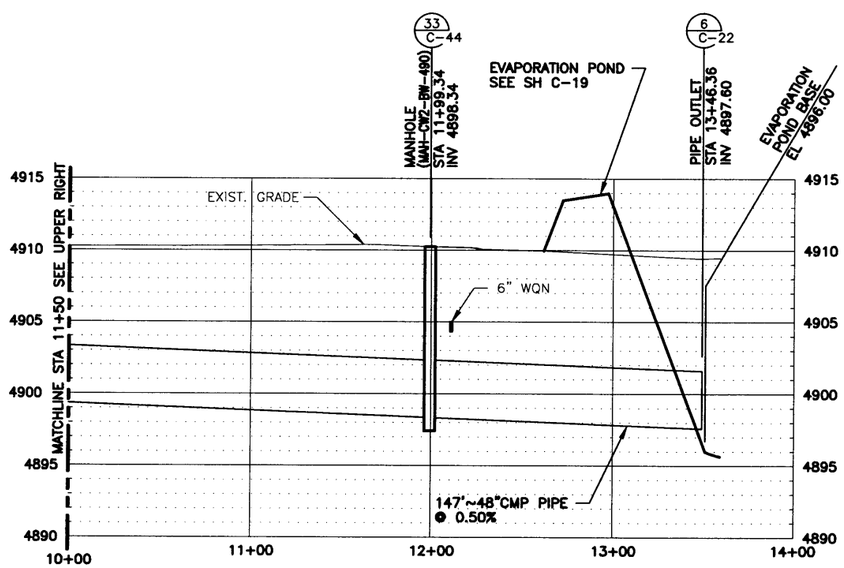

NOTES

1. ELEVATIONS AND LOCATIONS OF ELECTRICAL DUCT BANKS AND PIPES SHOWN SHADED ARE APPROXIMATE ELEVATIONS AND LOCATIONS ONLY.
2. HORIZONTAL COORDINATES ARE INTEC SITE SPECIFIC. VERTICAL DATUM IS NRTS (0.35' HIGHER THAN INTEC VERTICAL DATUM).

REVISION: 0
ORIGINAL SIGNED BY: KURT D. FRITZ
DATE ORIGINAL SIGNED: 9/18/2000
SEAL NUMBER: 9404
ORIGINAL STORED AT: EROB DOCUMENT CONTROL

PROFESSIONAL ENGINEER REGISTERED 9404 STATE OF IDAHO KURT D. FRITZ

FOR DRAWING INDEX SEE DRAWING NO. 515158	SUBCONTRACT NO. S00-588051	INEEL (Idaho National Engineering & Environmental Laboratory) BECHTEL BWXT IDAHO, LLC
HORIZONTAL 1"=40' VERTICAL 1"=5'	REQUESTER: M.S. KAPTEIN DESIGN: KURT FRITZ DRAWN: ROB HERGESHEIMER PROJECT NO. 020978 SPEC CODE	INEEL OU 3-13 GROUP 1 TANK FARM INTERIM ACTION PHASE 1 & 2 ALIGNMENT 8 PROFILE
DESIGN PHASE: AFC	FOR REVIEW/APPROVAL SIGNATURES SEE DAR NO. 68366	SIZE D; CAGE CODE; INDEX CODE NUMBER AREA 200 TYPE 0100 CL 02 ORG 090; DWG-515177; REV
QUALITY LEVEL: 3	EFFECTIVE DATE: 9/18/2000	SCALE: NOTED; SHEET C-18

File: C-18.DWG ID: RDH5 Drawn in Model Space
Path: G:\OU3-13-TANKFARM\9-6-00 Default\9/18/00 - 3:50 P.M.

REVISIONS		
REV	DESCRIPTION	EFFECTIVE DATE:

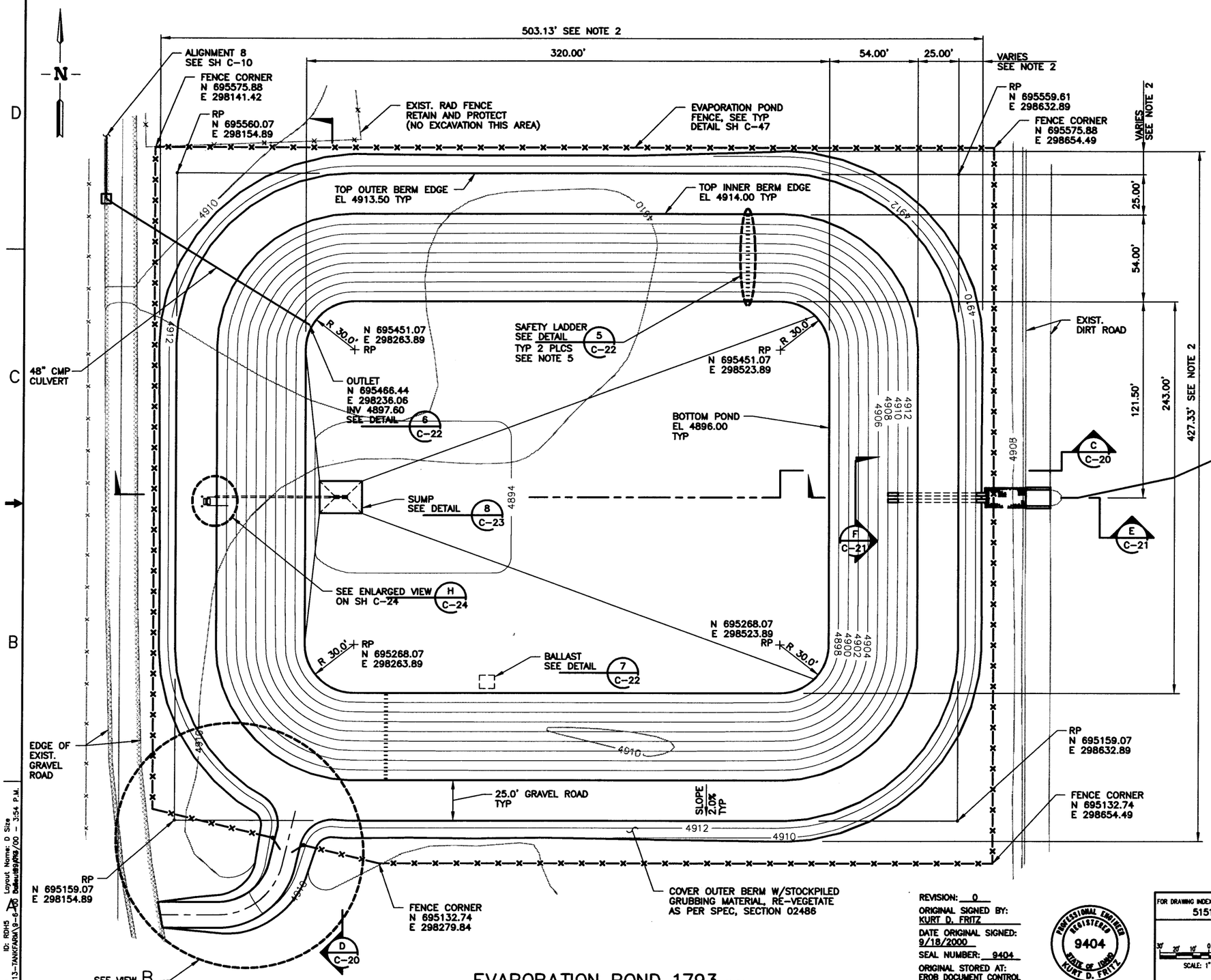

EVAPORATION POND 1793 REF C-10

SCALE: 1"=30.0'

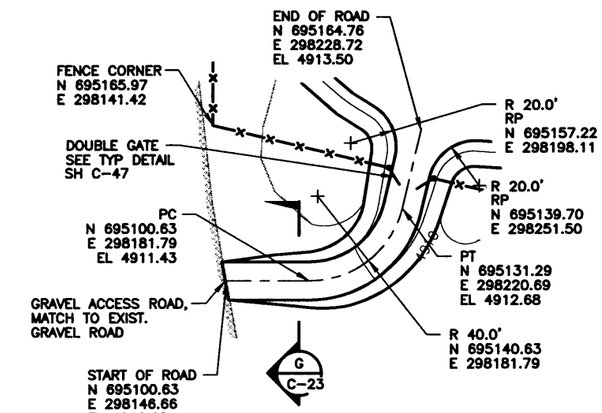

VIEW B

SCALE: 1"=30.0'

X-REFERENCE

515220

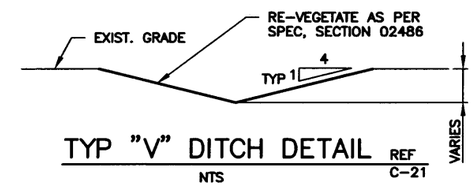

TYP "V" DITCH DETAIL REF C-21

NTS

ESTIMATED EARTHWORK QUANTITIES

CLEAR AND GRUBBING 5 ACRES
EXCAVATION (NO EXPANSION) 57,000 CY
GENERAL FILL 11,000 CY
DRAINAGE DITCHES 400 LF

NOTES

1. HORIZONTAL COORDINATES ARE INTEC SITE SPECIFIC. VERTICAL DATUM IS NRTS (0.35' HIGHER THAN INTEC VERTICAL DATUM).
2. OUTER BERM DIMENSIONS WILL VARY DUE TO CHANGES IN TERRAIN ELEVATIONS.
3. CONTOURS ARE ON 2.0' INTERVALS.
4. ESTIMATED QUANTITIES PERTAIN TO WORK THIS SHEET ONLY.
5. SAFETY LADDERS SHALL BE LOCATED APPROXIMATELY AS SHOWN.

REVISION: 0
ORIGINAL SIGNED BY: KURT D. FRITZ
DATE ORIGINAL SIGNED: 9/18/2000
SEAL NUMBER: 9404
ORIGINAL STORED AT: EROB DOCUMENT CONTROL

PROFESSIONAL ENGINEER REGISTERED 9404 STATE OF IDAHO KURT D. FRITZ

FOR DRAWING INDEX SEE DRAWING NO. 515158	SUBCONTRACT NO. S00-588051	INEEL Idaho National Engineering & Environmental Laboratory LOCKHEED MARTIN IDAHO, LLC	
30' 20' 10' 0 30' SCALE: 1" = 30.0'	REQUESTER: M.S. KAPTEIN	INEEL OU 3-13 GROUP 1 TANK FARM INTERIM ACTION PHASE 1 & 2 EVAPORATION POND 1793	
	DESIGN: KURT FRITZ		
	DRAWN: ROB HERGESHEIMER		
	PROJECT NO. 020978		
	SPEC CODE		
DESIGN PHASE: AFC	FOR REVIEW/APPROVAL SIGNATURES SEE DAR NO. 68366	SIZE D / CAGE CODE / INDEX CODE NUMBER AREA 200 TYPE 1793 CL 02 ORIG 090	DWG- 515178 REV
QUALITY LEVEL: 3	EFFECTIVE DATE: 9/18/2000	SCALE: 1"=30.0'	SHEET C-19

FWT-01-REV 3.1

File: C-19.dwg ID: RDH5 Layout Name: D Size A
Path: G:\OU3-13-TANKFARM\9-6-00 Dallas:dfs/RB/00 - 3:54 P.M.

REVISIONS		
REV	DESCRIPTION	EFFECTIVE DATE:

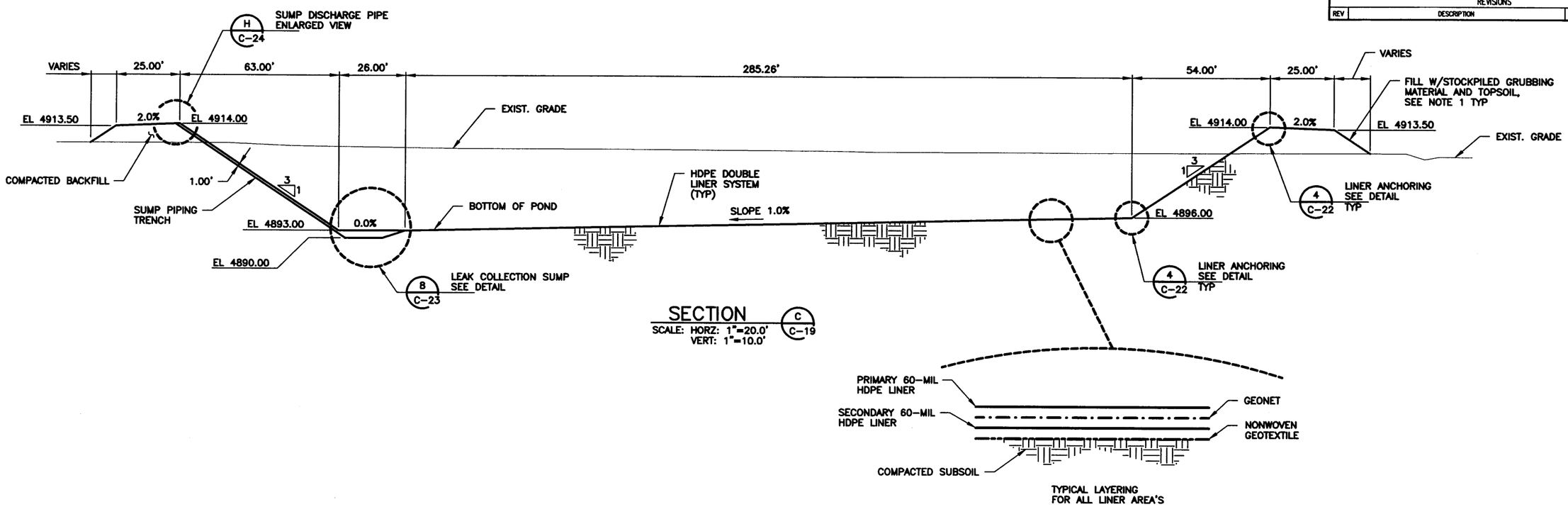

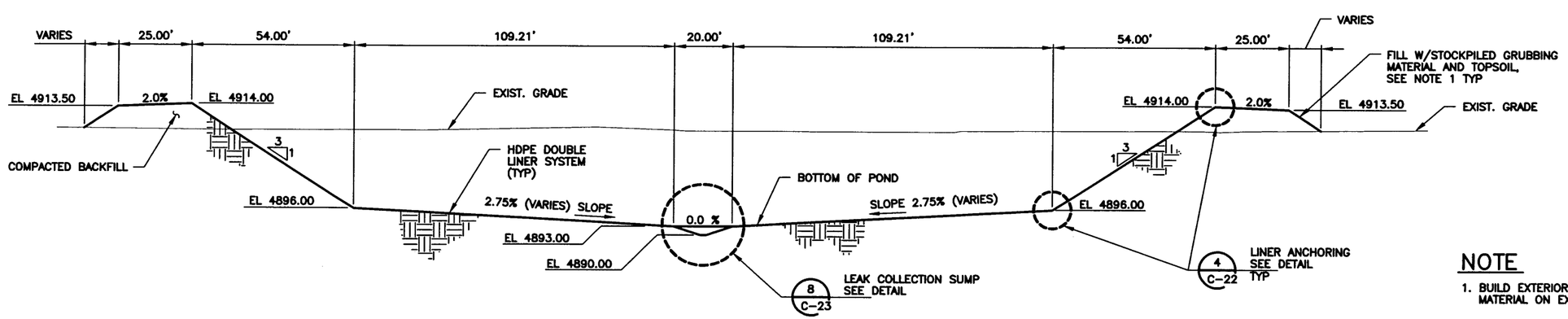

NOTE

1. BUILD EXTERIOR SLOPE TO 2:1. PLACE STOCKPILED TOPSOIL MATERIAL ON EXTERIOR OF BERM TO FLATTEN SLOPE (3:1 MIN).

REVISION: 0
ORIGINAL SIGNED BY: KURT D. FRITZ
DATE ORIGINAL SIGNED: 9/18/2000
SEAL NUMBER: 9404
ORIGINAL STORED AT: EROB DOCUMENT CONTROL

PROFESSIONAL ENGINEER REGISTERED 9404 STATE OF IDAHO KURT D. FRITZ

FOR DRAWING INDEX SEE DRAWING NO. 515158	SUBCONTRACT NO. S00-588051	INEEL (Idaho National Engineering & Environmental Laboratory) BECHTEL BWXT IDAHO, LLC	
NOTED	REQUESTER: M.S. KAPTEIN	INEEL OU 3-13 GROUP 1 TANK FARM INTERIM ACTION PHASE 1 & 2 EVAPORATION POND SECTIONS	
	DESIGN: KURT FRITZ		
	DRAWN: ROB HERGESHEIMER		
	PROJECT NO. 020978		
	SPEC CODE		
DESIGN PHASE: AFC	FOR REVIEW/APPROVAL SIGNATURES SEE DAR NO. 68366	SIZE D / CAGE CODE 01MF3 / INDEX CODE NUMBER AREA 200 TYPE 1793 Q 02 ORG 090	DWG-515179 REV
QUALITY LEVEL: 3	EFFECTIVE DATE: 9/18/2000	SCALE: NOTED	SHEET C-20

File: C-20.dwg Path: G:\OU3-13-TANKFARM\9-8-00 ID: RDH5 Layout Name: D Size Date: 09/06/00 - 4:03 P.M.

REVISIONS		
REV	DESCRIPTION	EFFECTIVE DATE:

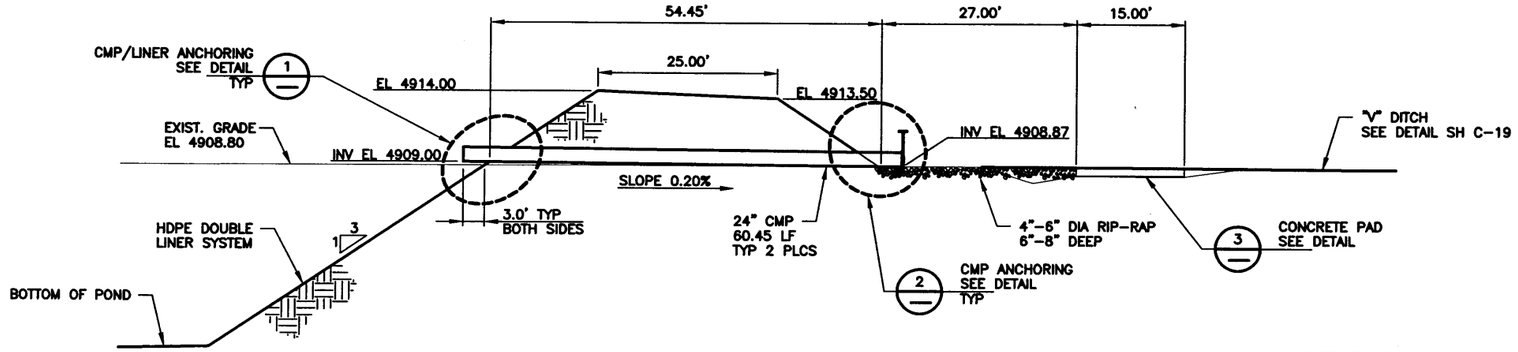

SECTION E C-19

SCALE: HORZ: 1"=10.0'
VERT: 1"=5.0'

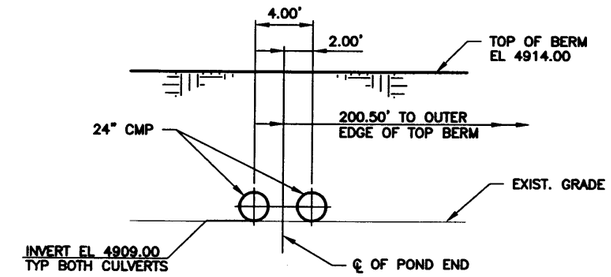

SECTION F C-19

SCALE: HORZ: 1"=5.0'
VERT: 1"=2.5'

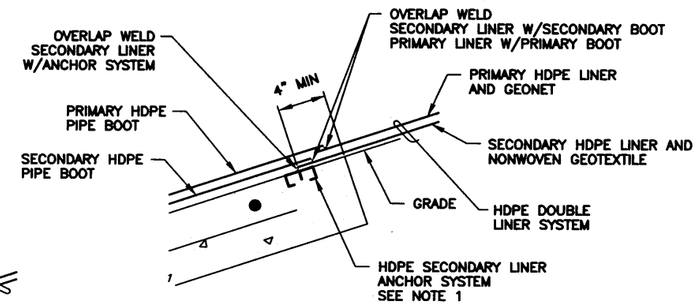

ENLARGED VIEW

NTS
SEE NOTE 2

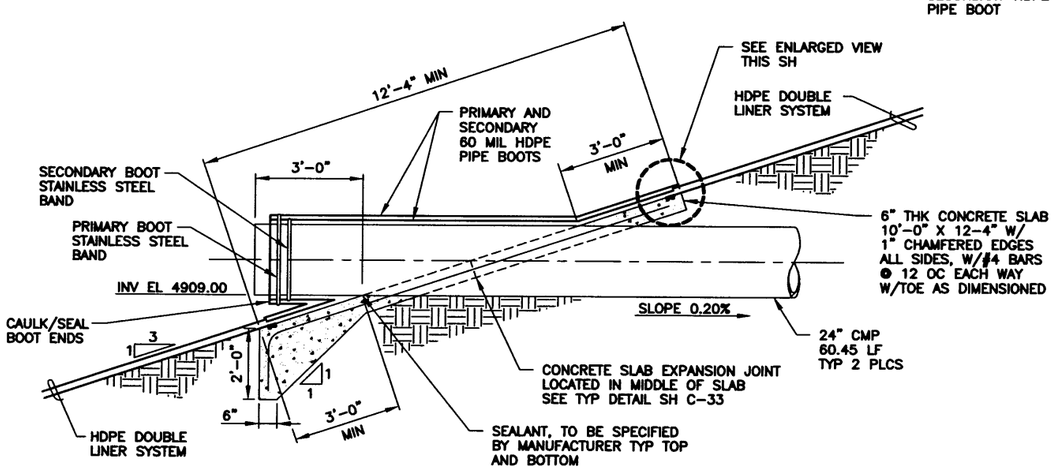

DETAIL 1

SCALE: 1"=2'-0"

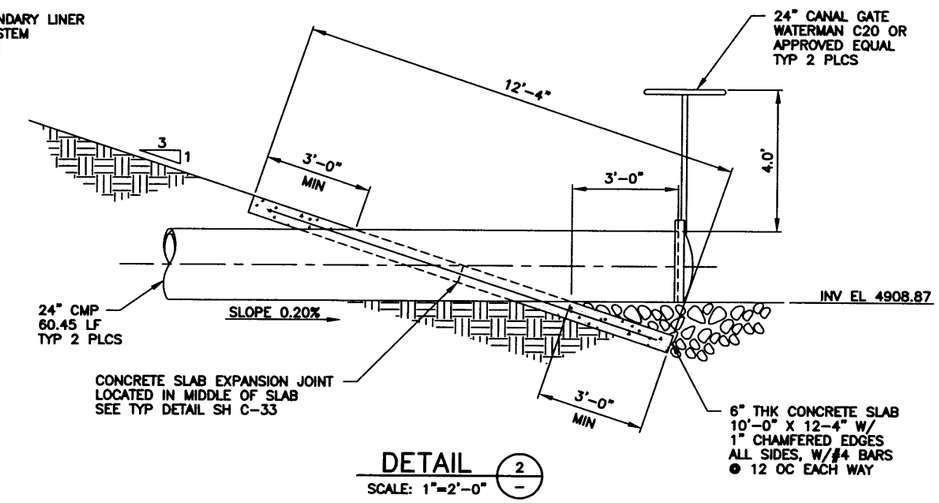

DETAIL 2

SCALE: 1"=2'-0"

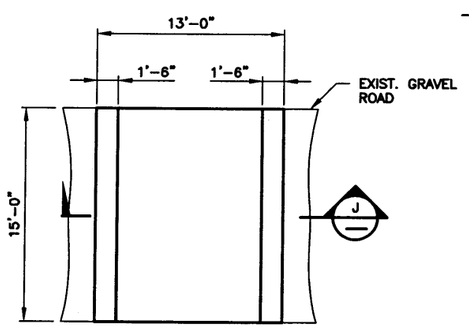

DETAIL 3

1"=5'-0"

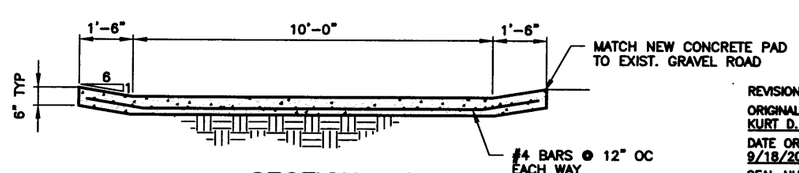

SECTION J

1"=2'-0"

NOTES

1. FASTEN SECONDARY LINER TO CONCRETE USING MANUFACTURERS SPECIFIED ANCHORING SYSTEM OF HDPE ANCHORS OR BATTEN STRIPS.
2. INFORMATION CALLED OUT IN ENLARGED VIEW IS TYP OF ANCHORING AND OVERLAP WELDING ON ALL SIDES OF PIPE BOOT.

REVISION: 0
ORIGINAL SIGNED BY: KURT D. FRITZ
DATE ORIGINAL SIGNED: 9/18/2000
SEAL NUMBER: 9404
ORIGINAL STORED AT: EROB DOCUMENT CONTROL

PROFESSIONAL ENGINEER REGISTERED 9404 STATE OF IDAHO KURT D. FRITZ

FOR DRAWING INDEX SEE DRAWING NO. 515158	SUBCONTRACT NO. S00-588051	INEEL (Idaho National Engineering & Environmental Laboratory) BECHTEL BWXT IDAHO, LLC
SCALE: 1" = 2'-0"	REQUESTER: M.S. KAPTEIN	INEEL OU 3-13 GROUP1 TANK FARM INTERIM ACTION PHASE 1 & 2 EVAPORATION POND SECTIONS AND DETAILS
	DESIGN: KURT FRITZ	
	DRAWN: ROB HERGESHEIMER	
	PROJECT NO. 020978	
	SPEC CODE	
DESIGN PHASE: AFC	FOR REVIEW/APPROVAL SIGNATURES SEE DAR NO. 68366	SIZE D / CAGE CODE / INDEX CODE NUMBER AREA 200 TYPE 1793 CL 02 ORG 090 / DWG-515180 / REV
QUALITY LEVEL: 3	EFFECTIVE DATE: 9/18/2000	SCALE: NOTED / SHEET C-21

File: C-21-REV.dwg ID: RDH5 Layout Name: D Size
Path: G:\OU3-13-TANKFARM\9-6-00 Date: 09/06/00 - 4:06 P.M.

REVISIONS		
REV	DESCRIPTION	EFFECTIVE DATE:

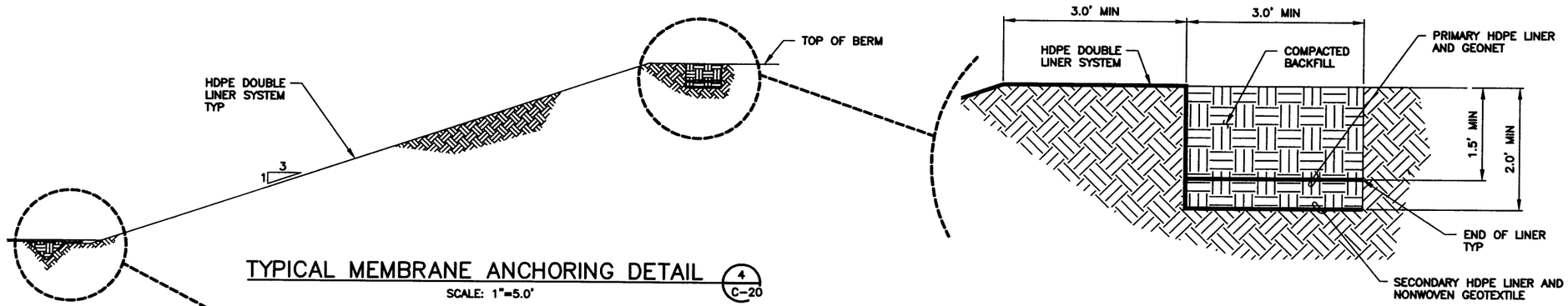

TYPICAL MEMBRANE ANCHORING DETAIL (4 / C-20)

SCALE: 1"=5.0'

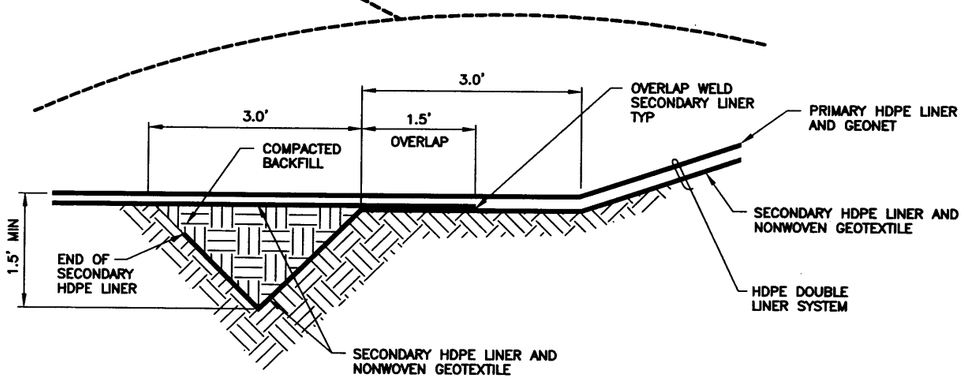

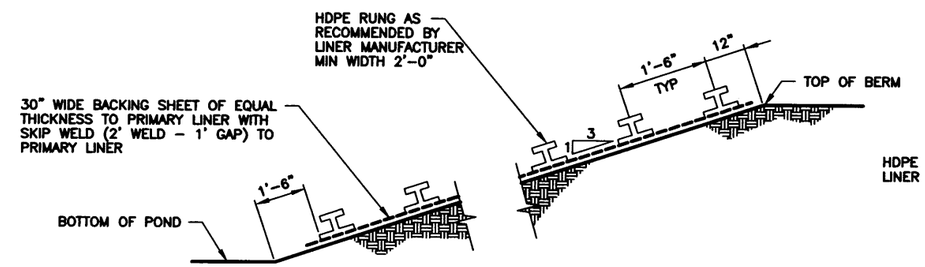

TYP SAFETY LADDER DETAIL (5 / C-19)

NTS

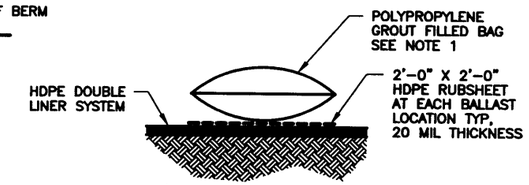

TYPICAL BALLAST DETAIL (7 / C-19)

NTS

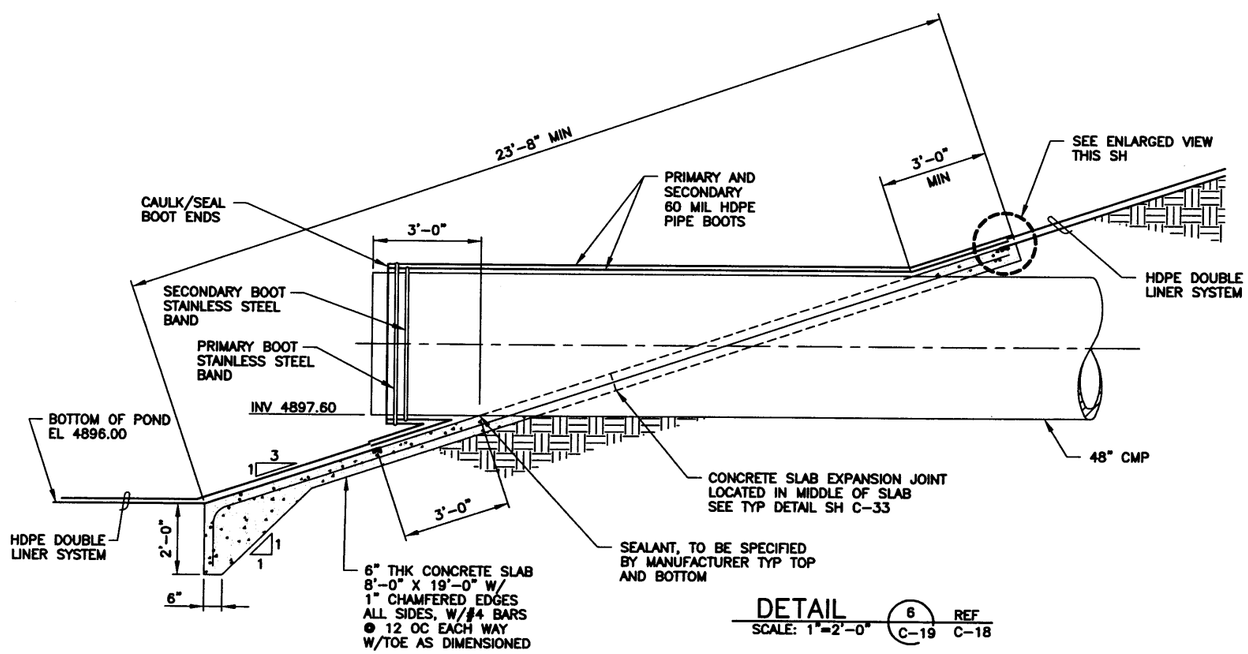

DETAIL (6 / C-19 REF C-18)

SCALE: 1"=2'-0"

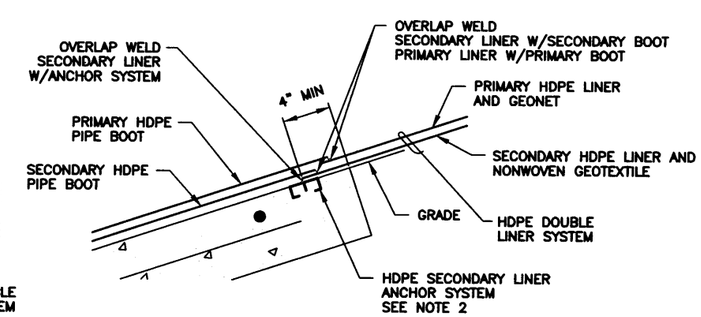

ENLARGED VIEW

NTS
SEE NOTE 3

NOTE

1. PLACE BALLAST ON GRID INTERVALS ACROSS SLOPE AND BASE OF POND, UNDER DIRECTION OF THE LINER MANUFACTURER.
2. FASTEN SECONDARY LINER TO CONCRETE USING MANUFACTURERS SPECIFIED ANCHORING SYSTEM OF HDPE ANCHORS OR BATTEN STRIPS.
3. INFORMATION CALLED OUT IN ENLARGED VIEW IS TYP OF ANCHORING AND OVERLAP WELDING ON ALL SIDES OF PIPE BOOT.

REVISION: 0
ORIGINAL SIGNED BY: KURT D. FRITZ
DATE ORIGINAL SIGNED: 9/18/2000
SEAL NUMBER: 9404
ORIGINAL STORED AT: EROB DOCUMENT CONTROL

PROFESSIONAL ENGINEER REGISTERED 9404 STATE OF IDAHO KURT D. FRITZ

FOR DRAWING INDEX SEE DRAWING NO. 515158	SUBCONTRACT NO. S00-588051	INEEL (Idaho National Engineering & Environmental Laboratory) BECHTEL BWXT IDAHO, LLC	
NOTED	REQUESTER: M.S. KAPTEIN	INEEL OU 3-13 GROUP1 TANK FARM INTERIM ACTION PHASE 1 & 2 EVAPORATION POND DETAILS	
	DESIGN: KURT FRITZ		
	DRAWN: ROB HERGESHEIMER		
	PROJECT NO. 020978		
	SPEC CODE		
DESIGN PHASE: AFC	FOR REVIEW/APPROVAL SIGNATURES SEE DAR NO. 68366	SIZE D; CAGE CODE; INDEX CODE NUMBER AREA 200 TYPE 1793 CL 02 ORIG 090	DWG-515181 REV
QUALITY LEVEL: 3	EFFECTIVE DATE: 9/18/2000	SCALE: NOTED	SHEET C-22

File: C-22-REV.dwg ID: RDH5 Layout Name: D Size
Path: G:\OU3-13-TANKFARM\9-6-00 Released9/18/00 - 4:05 P.M.

REVISIONS		
REV	DESCRIPTION	EFFECTIVE DATE:

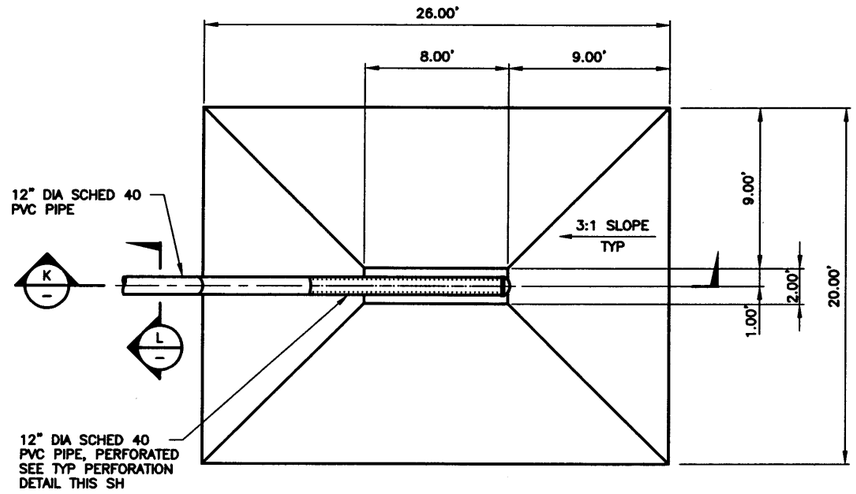

DETAIL (8 / C-19) REF C-20
SCALE: 1"=4.0'

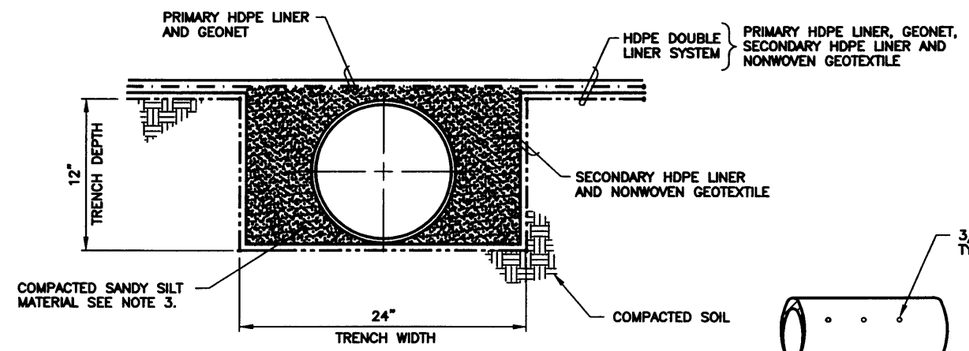

SECTION (L / –)
SCALE: 2/1

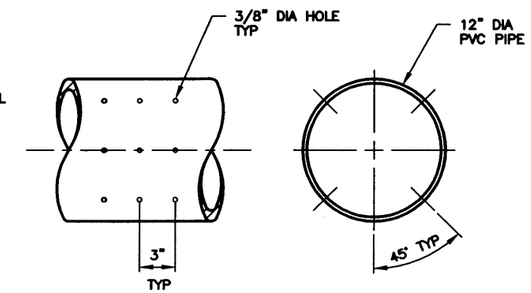

TYP PIPE PERFORATION DETAIL
SCALE: 2/1

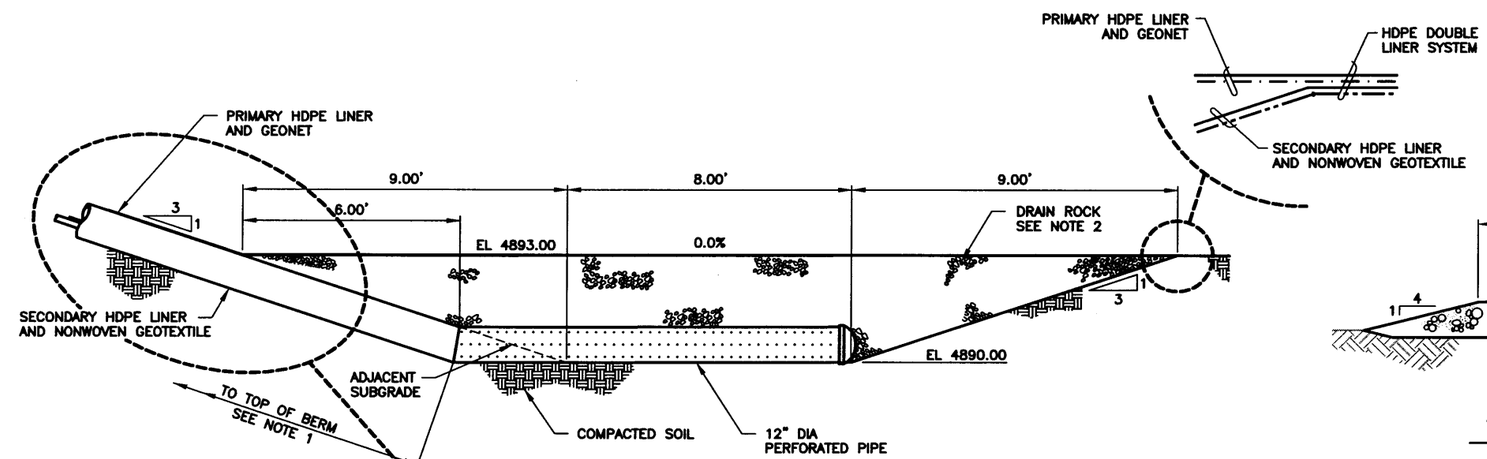

SECTION (K / –)
SCALE: 1"=2.0'

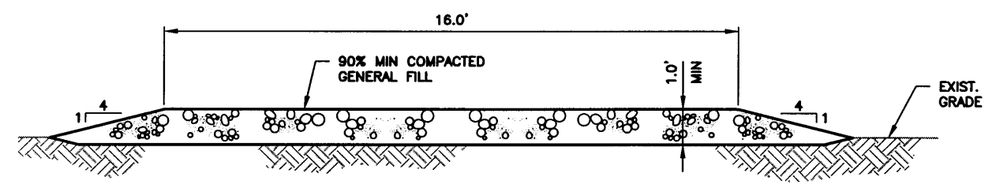

TYPICAL SECTION FOR NEW ACCESS ROAD (G / C-19)
SCALE: 1"=2.0'

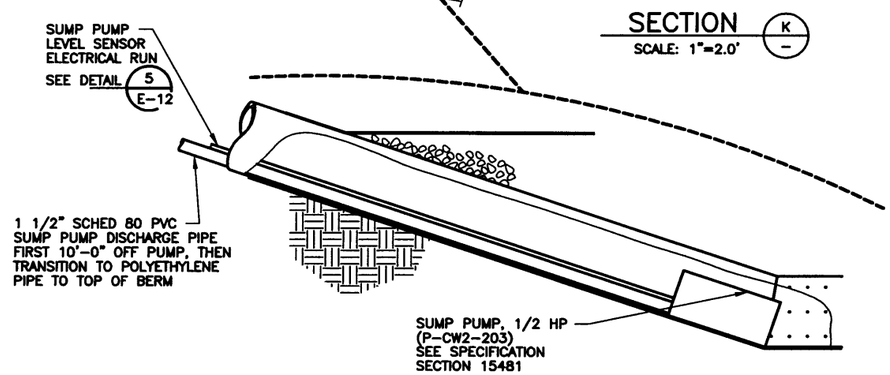

NOTES

1. NONWOVEN GEOTEXTILE SHALL BE PLACED AROUND THE PIPE AT THE POINT OF INTERFACE BETWEEN THE BACKFILL AND THE DRAIN ROCK TO ELIMINATE FINES FROM FILLING IN THE VOIDS IN THE DRAIN ROCK.
2. DRAIN ROCK SHALL BE 3/4" TO 1/2" WELL ROUND, WASHED GRAVEL.
3. SANDY SILT MATERIAL SHALL BE OF SOIL CLASSIFICATION GROUP SM WITH NO GRAVEL GREATER THAN 1" DIA. THIS MATERIAL MAY BE OBTAINED FROM THE TRA PIT OVERBURDEN OR OTHER APPROVED SOURCE.

REVISION: 0
ORIGINAL SIGNED BY: KURT D. FRITZ
DATE ORIGINAL SIGNED: 9/18/2000
SEAL NUMBER: 9404
ORIGINAL STORED AT: EROB DOCUMENT CONTROL

PROFESSIONAL ENGINEER REGISTERED 9404 STATE OF IDAHO KURT D. FRITZ

FOR DRAWING INDEX SEE DRAWING NO. 515158	SUBCONTRACT NO. S00-588051
SCALE: 1" = 4.0' / SCALE: 1" = 2.0'	REQUESTER: M.S. KAPTEIN
	DESIGN: JESTIN HURST
	DRAWN: ROB HERGESHEIMER
	PROJECT NO. 020978
	SPEC CODE
DESIGN PHASE: AFC	FOR REVIEW/APPROVAL SIGNATURES SEE DAR NO. 68366
QUALITY LEVEL: 3	EFFECTIVE DATE: 9/18/2000

INEEL
Idaho National Engineering & Environmental Laboratory
BECHTEL BWXT IDAHO, LLC

INEEL
OU 3-13 GROUP 1
TANK FARM INTERIM ACTION
PHASE 1 & 2
EVAPORATION POND SECTIONS AND DETAILS

SIZE	CAGE CODE	INDEX CODE NUMBER				DWG-	REV
		AREA	TYPE	CL	ORIG		
D	01MF3	200	1793	02	090	515182	

SCALE: NOTED
SHEET C-23

File: C-23.dwg
Path: G:\OU3-13-TANKFARM\9-8-00
ID: RDH5
Layout Name: D Size
Dallas:dbb/RHB/00 - 4:13 P.M.

REVISIONS		
REV	DESCRIPTION	EFFECTIVE DATE:

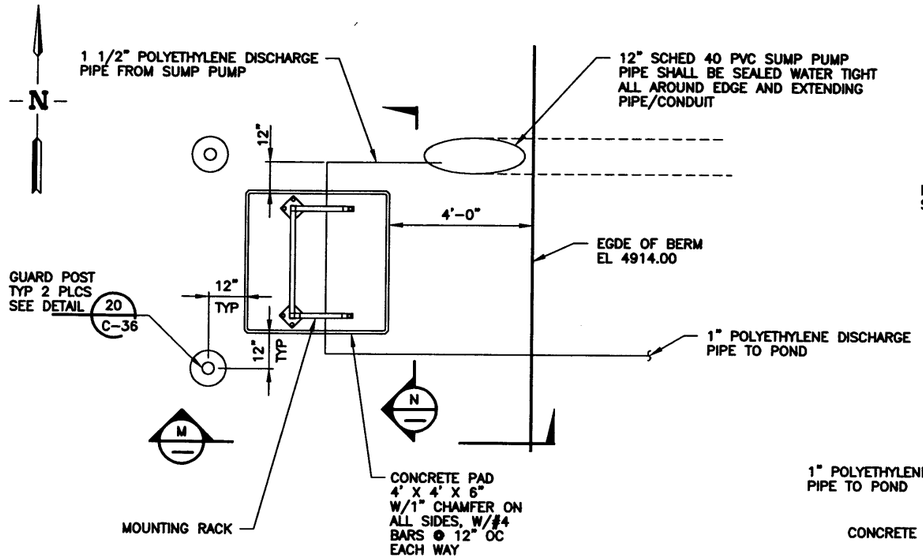

ENLARGED VIEW (H / C-19) REF C-20

SCALE: 1"=2'-0"

(ELECTRICAL COMPONENTS OMITTED FOR CLARITY)

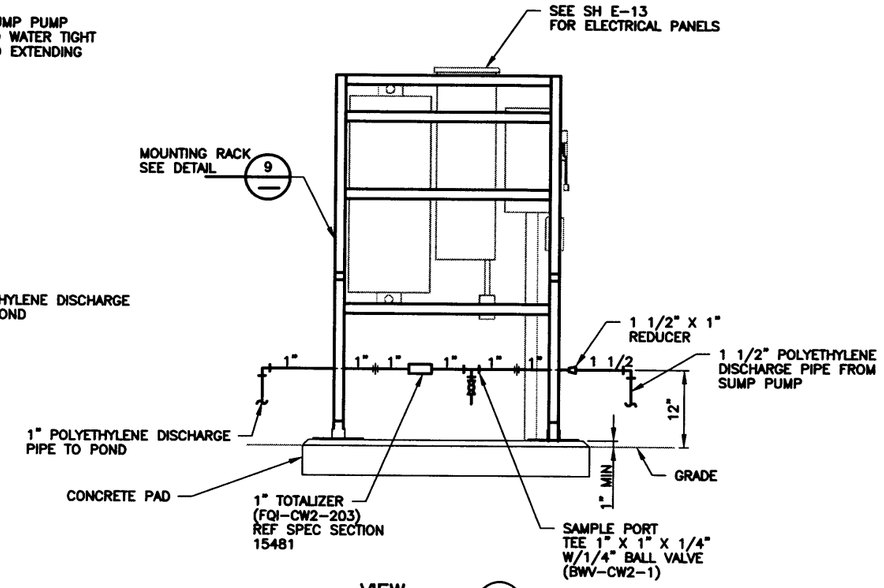

VIEW (N)

SCALE: 1"=1'-0"
SEE NOTE 2

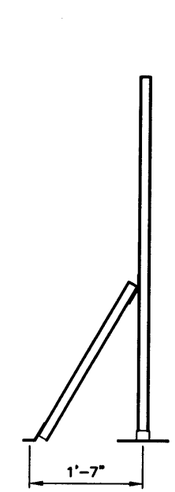

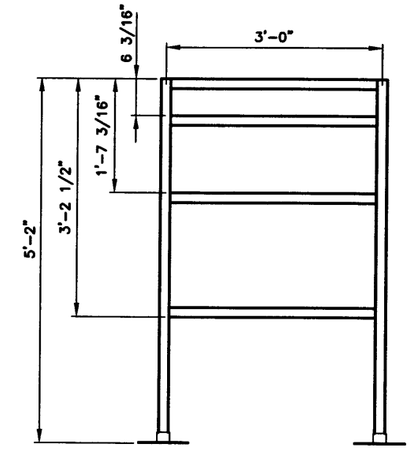

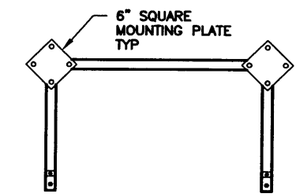

DETAIL (9)

SCALE: 1"=1'-0"
SEE NOTE 1

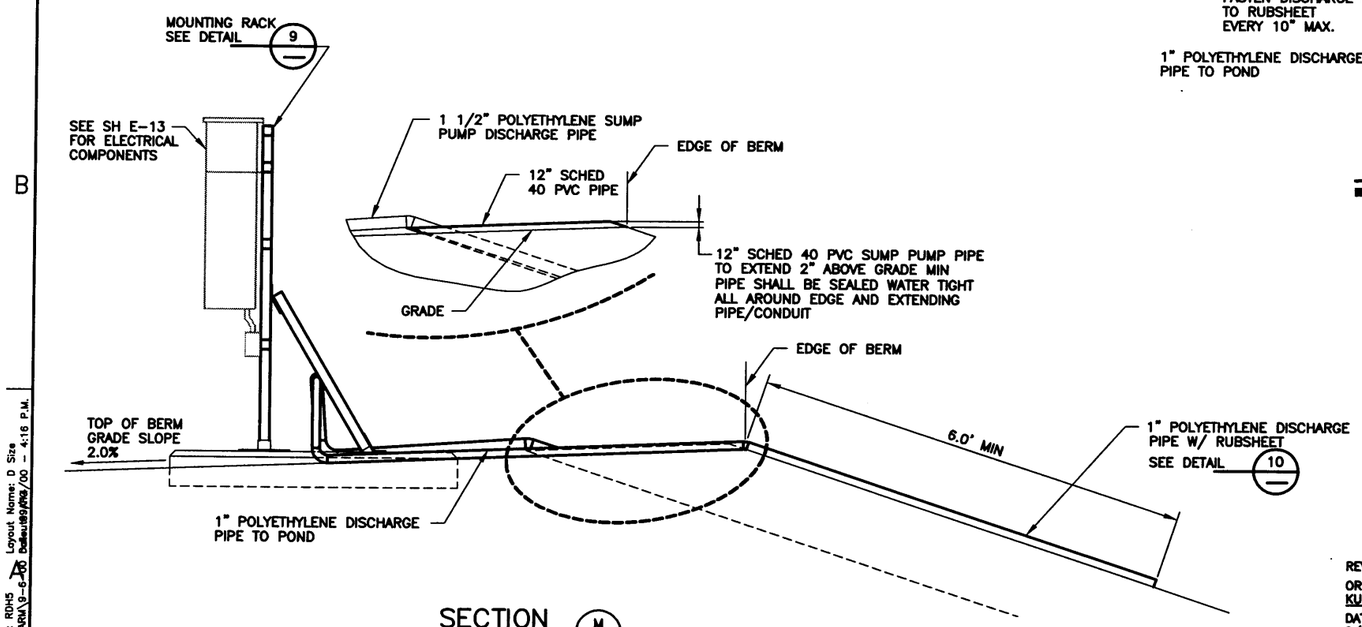

SECTION (M)

SCALE: 1"=1-0"

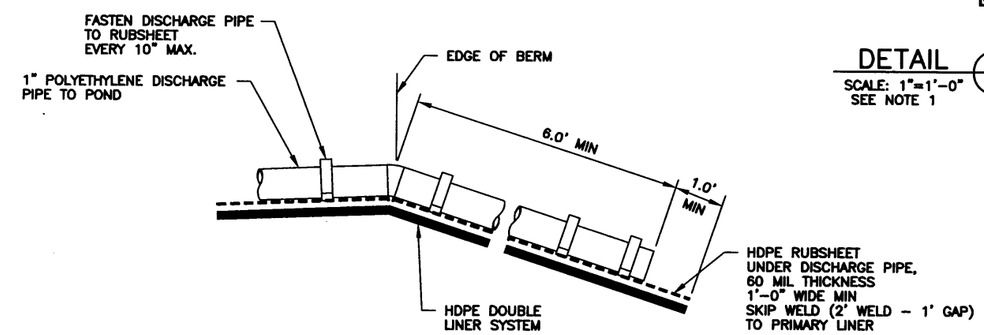

DETAIL (10)

NTS

NOTES

1. SUPPORT RACK DETAIL SHOWN IS A PROPOSED CONFIGURATION. RACK SHALL BE CONSTRUCTED USING UNISTRUT P-1000 SERIES OR APPROVED EQUAL MATERIAL. DIMENSIONS SHOWN ARE REFERENCE ONLY AND SHALL BE VERIFIED TO ENSURE PROPER SPACING FOR MOUNTING OF ALL ELECTRICAL/PIPING COMPONENTS.
2. ALL PIPING SHALL BE MOUNTED AND SUPPORTED PER SPECIFICATION.

REVISION: 0
ORIGINAL SIGNED BY: KURT D. FRITZ
DATE ORIGINAL SIGNED: 9/18/2000
SEAL NUMBER: 9404
ORIGINAL STORED AT: EROB DOCUMENT CONTROL

PROFESSIONAL ENGINEER REGISTERED 9404 STATE OF IDAHO KURT D. FRITZ

FOR DRAWING INDEX SEE DRAWING NO.	515158
SCALE: 1" = 1'-0"	
SCALE: 1" = 2'-0"	
DESIGN PHASE:	AFC
QUALITY LEVEL:	3
SUBCONTRACT NO.	S00-588051
REQUESTER:	M.S. KAPTEIN
DESIGN:	KURT FRITZ
DRAWN:	ROB HERGESHEIMER
PROJECT NO.	020978
SPEC CODE	
FOR REVIEW/APPROVAL SIGNATURES SEE DAR NO.	68366
EFFECTIVE DATE:	9/18/2000

INEEL (Idaho National Engineering & Environmental Laboratory) BECHTEL BWXT IDAHO, LLC

INEEL
OU 3-13 GROUP 1
TANK FARM INTERIM ACTION
PHASE 1 & 2
EVAPORATION POND SECTION, VEIWS AND DETAILS

SIZE	CAGE CODE	INDEX CODE NUMBER				DWG	REV
		AREA	TYPE	CL	ORIG		
D		200	1793	02	090	515183	

SCALE: NOTED
SHEET C-24

File: C-24.dwg
Path: G:\OU3-13-TANKFARM\9-8-00
ID: RDH5
Layout Name: D Size
Date: 09/06/00 - 4:16 P.M.

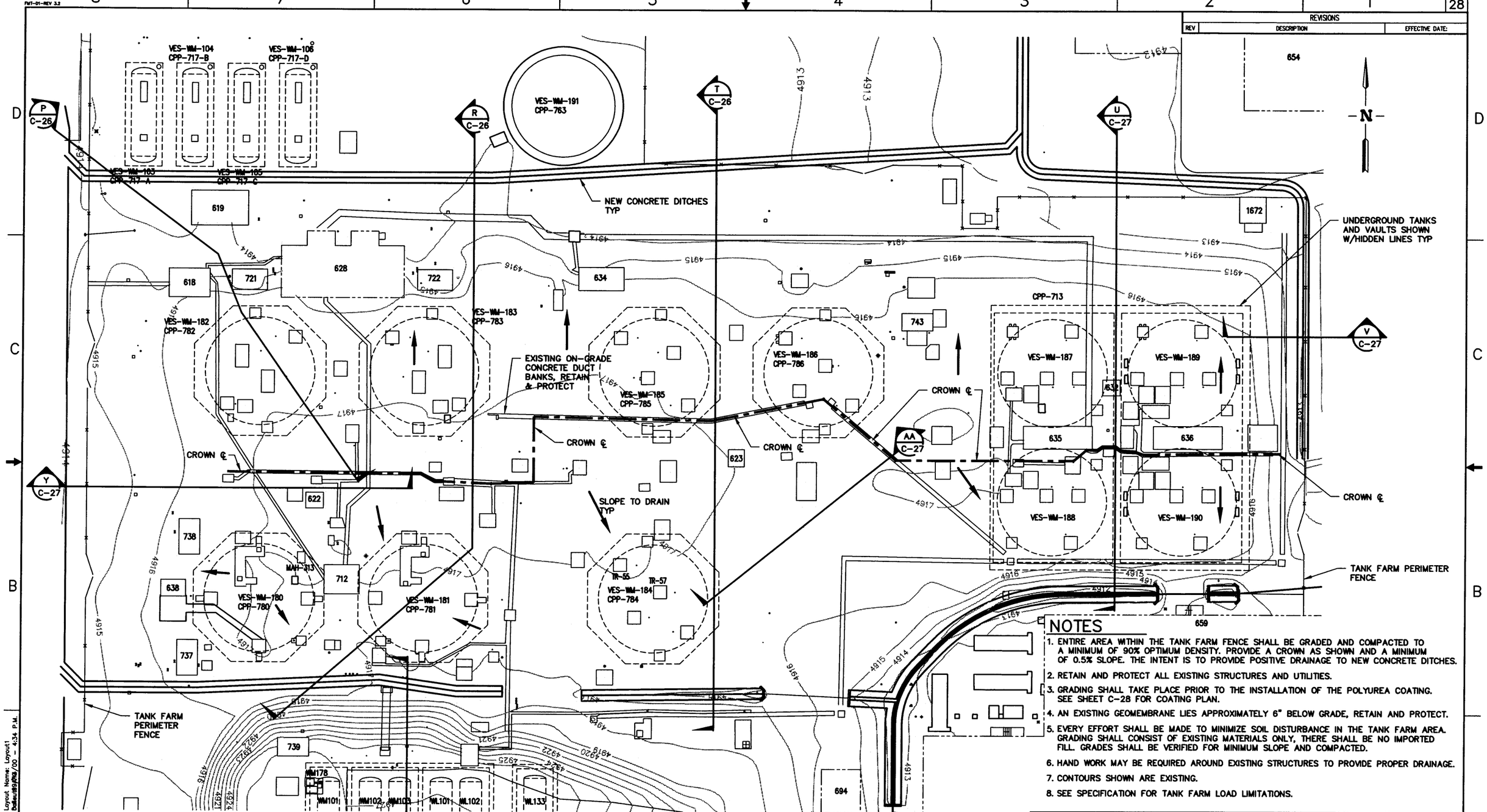

GRADING PLAN

SCALE: 1"=20.0'

NOTES

1. ENTIRE AREA WITHIN THE TANK FARM FENCE SHALL BE GRADED AND COMPACTED TO A MINIMUM OF 90% OPTIMUM DENSITY. PROVIDE A CROWN AS SHOWN AND A MINIMUM OF 0.5% SLOPE. THE INTENT IS TO PROVIDE POSITIVE DRAINAGE TO NEW CONCRETE DITCHES.
2. RETAIN AND PROTECT ALL EXISTING STRUCTURES AND UTILITIES.
3. GRADING SHALL TAKE PLACE PRIOR TO THE INSTALLATION OF THE POLYUREA COATING. SEE SHEET C-28 FOR COATING PLAN.
4. AN EXISTING GEOMEMBRANE LIES APPROXIMATELY 6" BELOW GRADE, RETAIN AND PROTECT.
5. EVERY EFFORT SHALL BE MADE TO MINIMIZE SOIL DISTURBANCE IN THE TANK FARM AREA. GRADING SHALL CONSIST OF EXISTING MATERIALS ONLY, THERE SHALL BE NO IMPORTED FILL. GRADES SHALL BE VERIFIED FOR MINIMUM SLOPE AND COMPACTED.
6. HAND WORK MAY BE REQUIRED AROUND EXISTING STRUCTURES TO PROVIDE PROPER DRAINAGE.
7. CONTOURS SHOWN ARE EXISTING.
8. SEE SPECIFICATION FOR TANK FARM LOAD LIMITATIONS.

REVISIONS

REV	DESCRIPTION	EFFECTIVE DATE:

REVISION: 0
ORIGINAL SIGNED BY: KURT D. FRITZ
DATE ORIGINAL SIGNED: 9/18/2000
SEAL NUMBER: 9404
ORIGINAL STORED AT: EROB DOCUMENT CONTROL

PROFESSIONAL ENGINEER REGISTERED 9404 STATE OF IDAHO KURT D. FRITZ

FOR DRAWING INDEX SEE DRAWING NO. 515158	SUBCONTRACT NO. S00-588051	INEEL Idaho National Engineering & Environmental Laboratory BECHTEL BWXT IDAHO, LLC
SCALE: 1" = 20.0'	REQUESTER: M.S. KAPTEIN	INEEL OU 3-13 GROUP 1 TANK FARM INTERIM ACTION PHASE 1 & 2 TANK FARM GRADING PLAN
	DESIGN: KURT FRITZ	
	DRAWN: ROB HERGESHEIMER	
	PROJECT NO. 020978	
	SPEC CODE	
DESIGN PHASE: AFC	FOR REVIEW/APPROVAL SIGNATURES SEE DAR NO. 68366	SIZE D; CAGE CODE; INDEX CODE NUMBER: AREA 200, TYPE 0100, CL 02, ORIG 090; DWG-515184; REV
QUALITY LEVEL: 3	EFFECTIVE DATE: 9/18/2000	SCALE: 1"=20.0'; SHEET C-25

File: C-25.DWG ID: RDH5 Layout Name: Layout1
Path: G:\OU3-13-TANKFARM\9-6-00 Dalleu\09/18/00 - 4:34 P.M.

REVISIONS		
REV	DESCRIPTION	EFFECTIVE DATE:

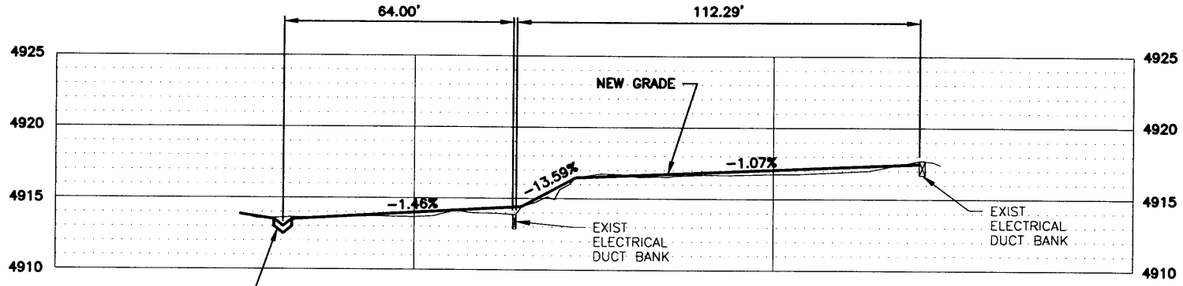

GRADE PROFILE

SCALE: HOR 1"=20'
VER 1"=5'

(P / C-25)

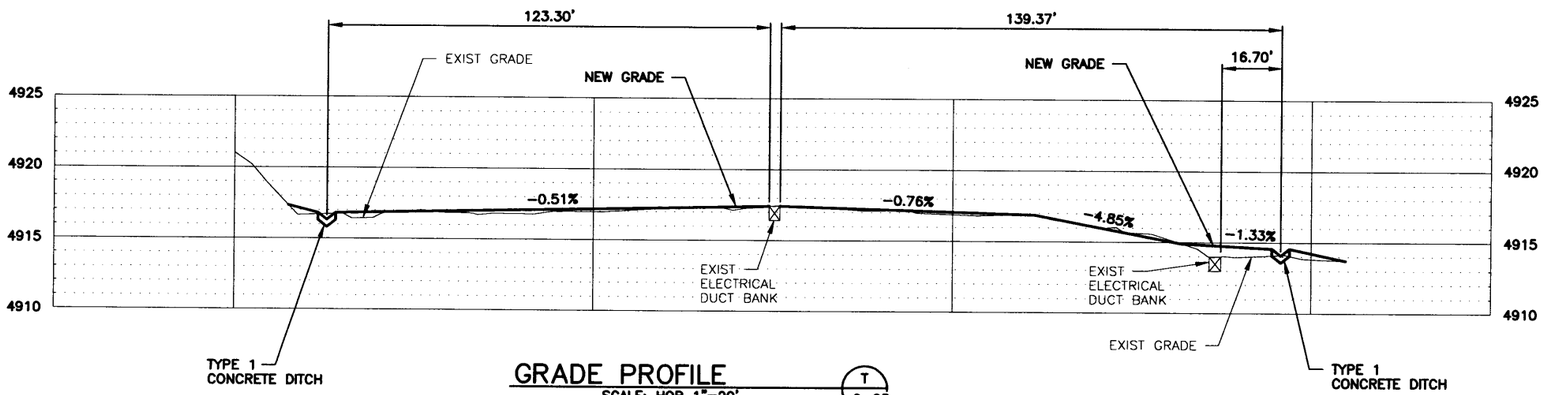

GRADE PROFILE

SCALE: HOR 1"=20'
VER 1"=5'

(T / C-25)

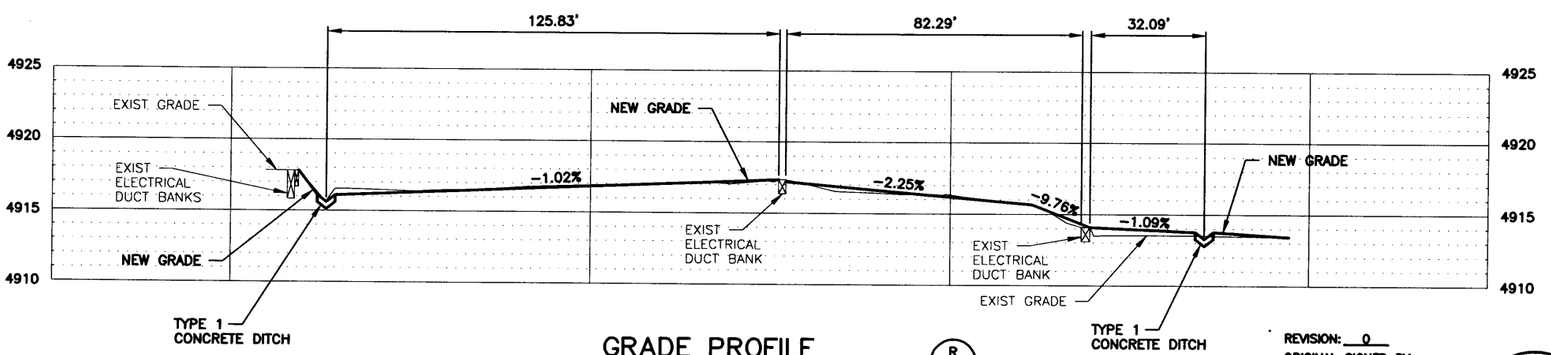

GRADE PROFILE

SCALE: HOR 1"=20'
VER 1"=5'

(R / C-25)

REVISION: 0
ORIGINAL SIGNED BY: KURT D. FRITZ
DATE ORIGINAL SIGNED: 9/18/2000
SEAL NUMBER: 9404
ORIGINAL STORED AT: EROB DOCUMENT CONTROL

PROFESSIONAL ENGINEER REGISTERED 9404 STATE OF IDAHO KURT D. FRITZ

FOR DRAWING INDEX SEE DRAWING NO. 515158	SUBCONTRACT NO. S00-588051	INEEL (Idaho National Engineering & Environmental Laboratory) BECHTEL BWXT IDAHO, LLC
HORIZONTAL 1"=20' VERTICAL 1"=5'	REQUESTER: M.S. KAPTEIN	INEEL OU 3-13 GROUP 1 TANK FARM INTERIM ACTION PHASE 1 & 2 GRADE PROFILES 1, 2 AND 3
	DESIGN: KURT FRITZ	
	DRAWN: ROB HERGESHEIMER	
	PROJECT NO. 020978	
	SPEC CODE	
DESIGN PHASE: AFC	FOR REVIEW/APPROVAL SIGNATURES SEE DAR NO. 68366	SIZE D / CAGE CODE / INDEX CODE NUMBER (AREA 200, TYPE 0100, CI 02, DWG 090) / DWG-515185 / REV
QUALITY LEVEL: 3	EFFECTIVE DATE: 9/18/2000	SCALE: NOTED / SHEET C-26

File: 515185.DWG ID: RDH5 Layout Name: D Size
Path: G:\OU3-13-TANKFARM\RELEASED Date: 09/19/00 - 11:01 A.M.

REVISIONS		
REV	DESCRIPTION	EFFECTIVE DATE:

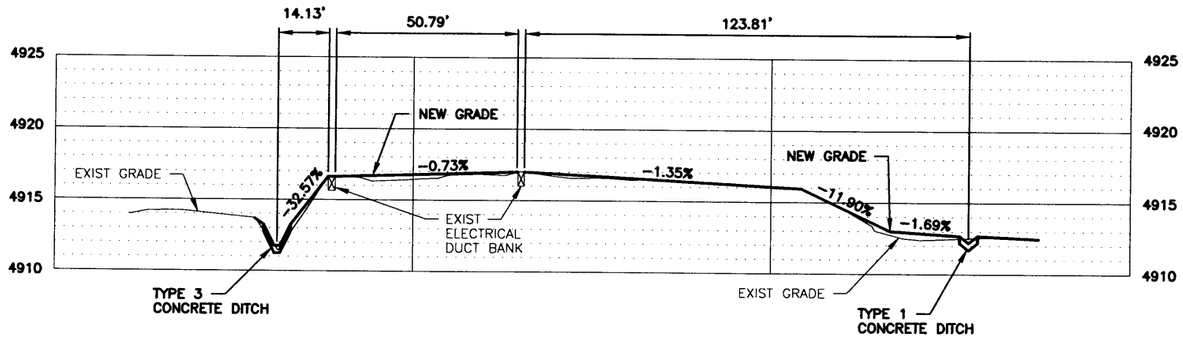

GRADE PROFILE (U / C-25)
SCALE: HOR 1"=20' VER 1"=5'

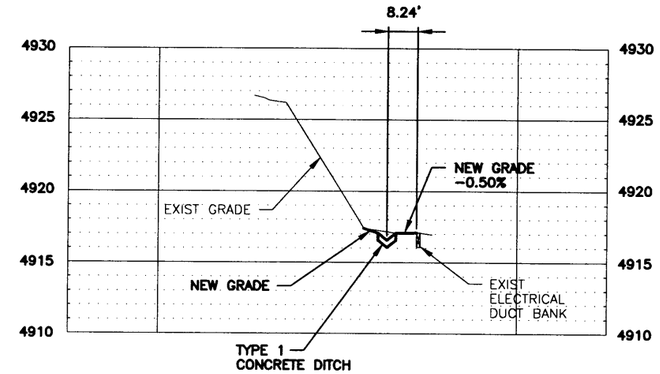

GRADE PROFILE (W / C-25)
SCALE: HOR 1"=20' VER 1"=5'

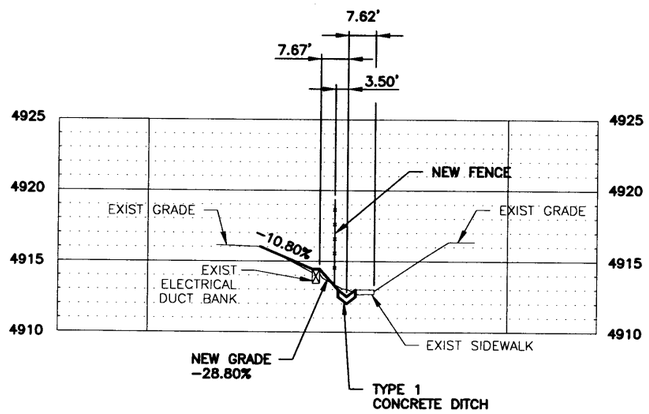

GRADE PROFILE (V / C-25)
SCALE: HOR 1"=20' VER 1"=5'

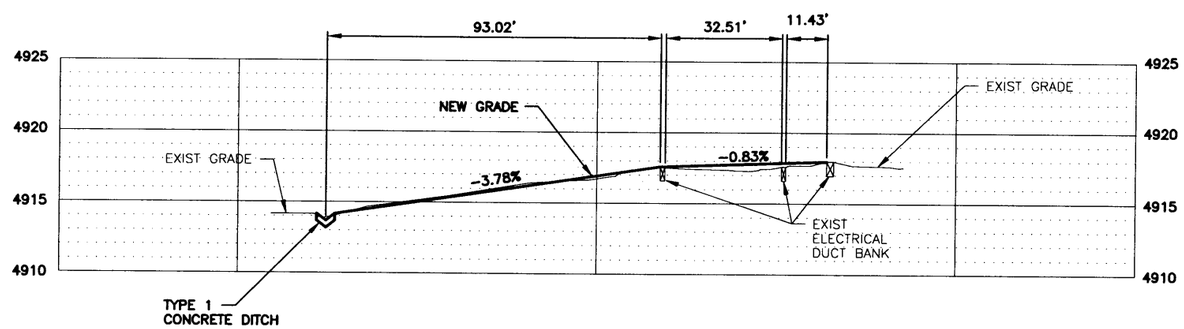

GRADE PROFILE (Y / C-25)
SCALE: HOR 1"=20' VER 1"=5'

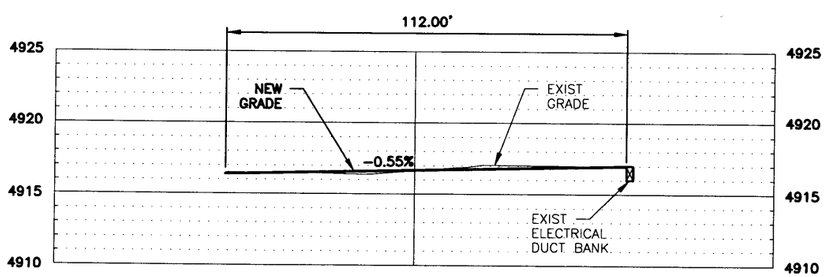

GRADE PROFILE (AA / C-25)
SCALE: HOR 1"=20' VER 1"=5'

REVISION: 0
ORIGINAL SIGNED BY: KURT D. FRITZ
DATE ORIGINAL SIGNED: 9/18/2000
SEAL NUMBER: 9404
ORIGINAL STORED AT: EROB DOCUMENT CONTROL

PROFESSIONAL ENGINEER REGISTERED 9404 STATE OF IDAHO KURT D. FRITZ

FOR DRAWING INDEX SEE DRAWING NO. 515158	SUBCONTRACT NO. S00-588051
HORIZONTAL 1"=20' VERTICAL 1"=5'	REQUESTER: M.S. KAPTEIN
	DESIGN: KURT FRITZ
	DRAWN: ROB HERGESHEIMER
	PROJECT NO. 020978
	SPEC CODE
	FOR REVIEW/APPROVAL SIGNATURES SEE DAR NO. 68366
DESIGN PHASE: AFC	
QUALITY LEVEL: 3	EFFECTIVE DATE: 9/18/2000

INEEL (Idaho National Engineering & Environmental Laboratory) BECHTEL BWXT IDAHO, LLC

INEEL
OU 3-13 GROUP 1
TANK FARM INTERIM ACTION
PHASE 1 & 2
GRADE PROFILES 4, 5, 6 AND 7

SIZE	CAGE CODE	INDEX CODE NUMBER				DWG-	REV
		AREA	TYPE	OL	ORIG		
D		200	0100	02	090	515186	
SCALE: NOTED						SHEET C-27	

FMT-01-REV 3.2

REVISIONS		
REV	DESCRIPTION	EFFECTIVE DATE:

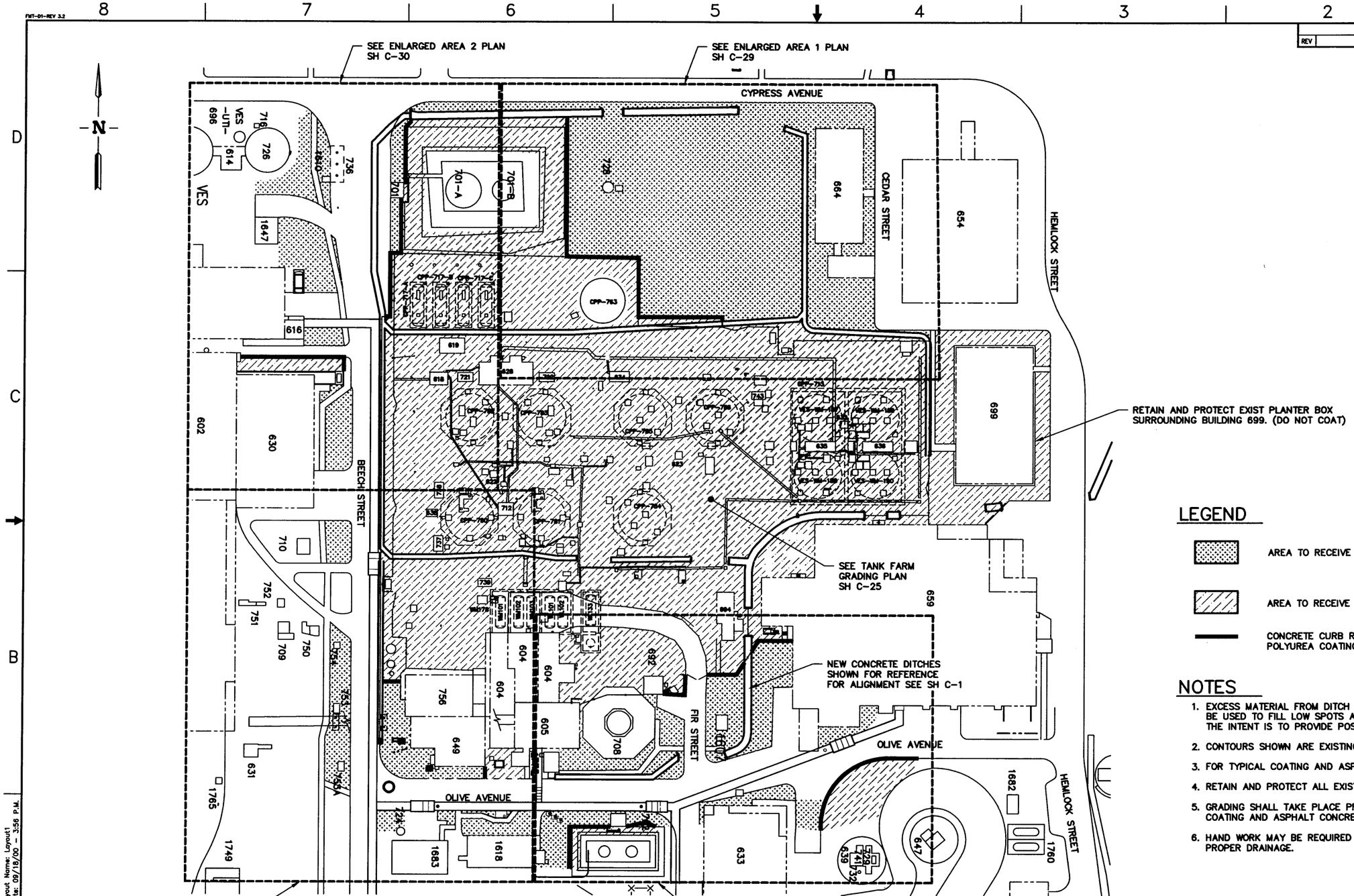

LEGEND

- AREA TO RECEIVE ASPHALT CONCRETE 100,405 SF APPROXIMATE
- AREA TO RECEIVE POLYUREA COATING 215,460 SF APPROXIMATE
- CONCRETE CURB REQUIRED BETWEEN ASPHALT CONCRETE AND POLYUREA COATING 1,140 LF APPROXIMATE.

NOTES

1. EXCESS MATERIAL FROM DITCH AND EVAPORATION POND CONSTRUCTION SHALL BE USED TO FILL LOW SPOTS AS NEEDED. COMPACT AND GRADE TO DRAIN. THE INTENT IS TO PROVIDE POSITIVE DRAINAGE TO NEW CONCRETE DITCHES.
2. CONTOURS SHOWN ARE EXISTING.
3. FOR TYPICAL COATING AND ASPHALT CONCRETE PAVING DETAILS SEE SH C-29.
4. RETAIN AND PROTECT ALL EXISTING STRUCTURES AND UTILITIES.
5. GRADING SHALL TAKE PLACE PRIOR TO THE INSTALLATION OF THE POLYUREA COATING AND ASPHALT CONCRETE.
6. HAND WORK MAY BE REQUIRED AROUND EXISTING STRUCTURES TO PROVIDE PROPER DRAINAGE.

POLYUREA COATING AND ASPHALT CONCRETE PLAN

REVISION: 0
ORIGINAL SIGNED BY: KURT D. FRITZ
DATE ORIGINAL SIGNED: 9/18/2000
SEAL NUMBER: 9404
ORIGINAL STORED AT: EROB DOCUMENT CONTROL

PROFESSIONAL ENGINEER REGISTERED 9404 STATE OF IDAHO KURT D. FRITZ

FOR DRAWING INDEX SEE DRAWING NO.	515158
SCALE: 1" = 50.0'	
DESIGN PHASE:	AFC
QUALITY LEVEL:	3
SUBCONTRACT NO.	S00-588051
REQUESTER:	M.S. KAPTEIN
DESIGN:	KURT FRITZ
DRAWN:	ROB HERGESHEIMER
PROJECT NO.	020978
SPEC CODE	
FOR REVIEW/APPROVAL SIGNATURES SEE DAR NO. 68366	
EFFECTIVE DATE:	9/18/2000

INEEL
Idaho National Engineering & Environmental Laboratory
BECHTEL BWXT IDAHO, LLC

INEEL
OU 3-13 GROUP 1
TANK FARM INTERIM ACTION
PHASE 1 & 2
POLYUREA COATING AND ASPHALT CONCRETE PLAN

SIZE	CAGE CODE	INDEX CODE NUMBER: AREA	TYPE	Q	DISC	DWG-	REV
D		200	0100	02	090	515187	

SCALE: 1"=50.0'
SHEET C-28

Layout Name: Layout1
Date: 09/18/00 - 3:56 P.M.
ID: MKG
File: 515187.dwg
Path: P:\OU3-13

REVISIONS		
REV	DESCRIPTION	EFFECTIVE DATE:

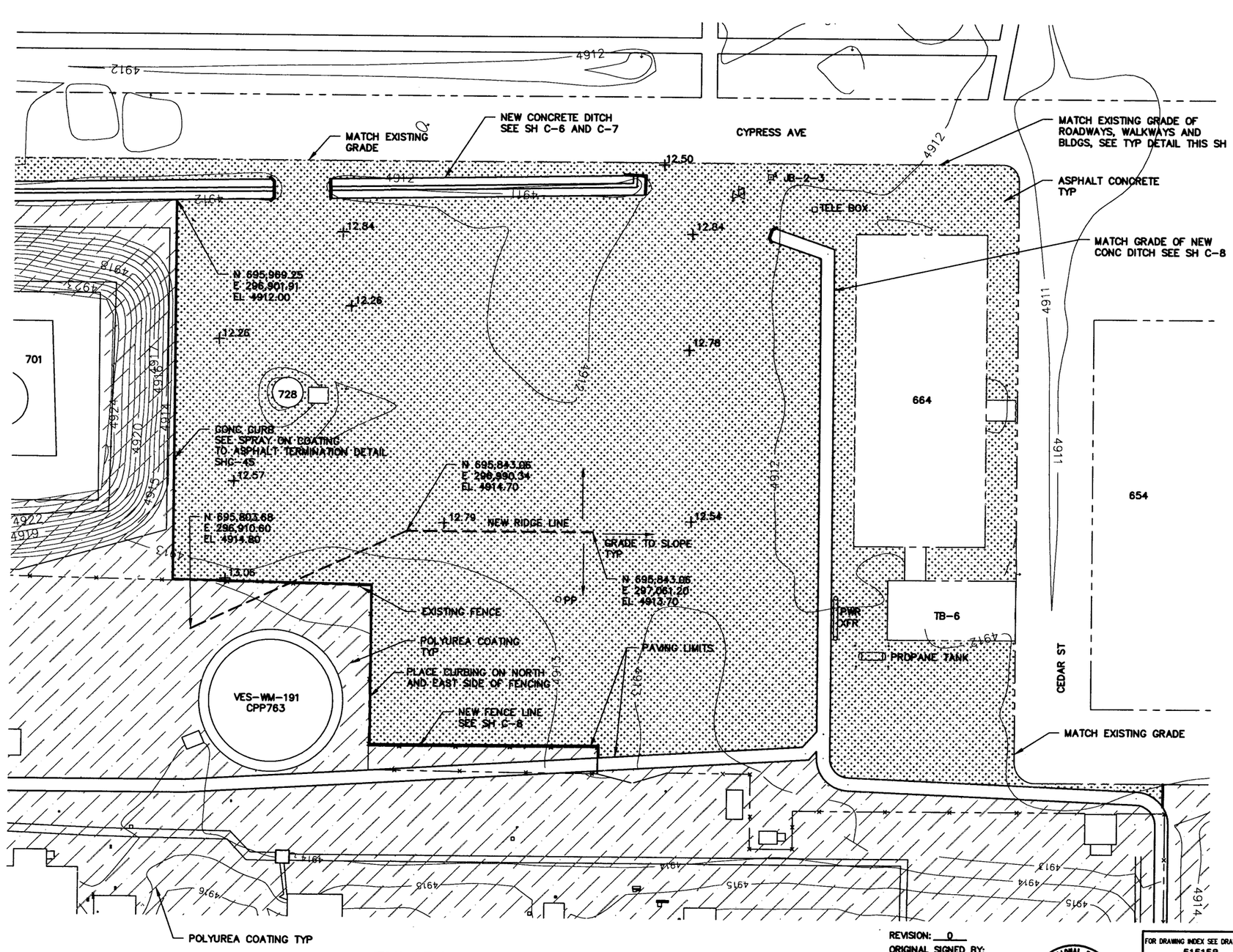

ENLARGED AREA 1 PLAN

SCALE: 1"=20.0'

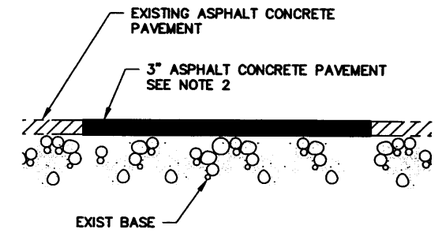

TYPICAL ASPHALT CONCRETE DETAIL

NTS

NOTES

1. HORIZONTAL COORDINATES ARE INTEC SITE SPECIFIC. VERTICAL DATUM IS NRTS (0.35' HIGHER THAN INTEC DATUM).
2. ALL AREAS TO RECEIVE ASPHALT CONCRETE SHALL HAVE THE EXISTING PAVEMENT SAW CUT TO CLEAN STRAIGHT EDGES. EXCAVATE EXISTING MATERIAL AS REQUIRED TO ATTAIN ELEVATIONS SHOWN ON PLANS. USE EXCAVATED MATERIAL AS FILL MATERIAL AND COMPACT AS REQUIRED.
3. EDGES OF EXISTING PAVEMENT AND NEW ASPHALT CONCRETE SHALL HAVE A TACK COAT APPLIED PRIOR TO THE PLACEMENT OF NEW ASPHALT CONCRETE.

REVISION: 0
ORIGINAL SIGNED BY: KURT D. FRITZ
DATE ORIGINAL SIGNED: 9/18/2000
SEAL NUMBER: 9404
ORIGINAL STORED AT: EROB DOCUMENT CONTROL

PROFESSIONAL ENGINEER REGISTERED 9404 STATE OF IDAHO KURT D. FRITZ

FOR DRAWING INDEX SEE DRAWING NO. 515158	SUBCONTRACT NO. S00-588051	INEEL (Idaho National Engineering & Environmental Laboratory) BECHTEL BWXT IDAHO, LLC
20' 10' 5' 0 20' SCALE: 1" = 20.0'	REQUESTER: M.S. KAPTEIN	INEEL OU 3-13 GROUP 1 TANK FARM INTERIM ACTION PHASE 1 & 2 ENLARGED AREA 1
	DESIGN: KURT FRITZ	
	DRAWN: Gene K. Mace	
	PROJECT NO. 020978	
	SPEC CODE	
DESIGN PHASE: AFC	FOR REVIEW/APPROVAL SIGNATURES SEE DAR NO. 68366	SIZE D; CAGE CODE; INDEX CODE NUMBER AREA 200 TYPE 0100 Q 02 ORG 090; DWG-515188; REV
QUALITY LEVEL: 3	EFFECTIVE DATE: 9/18/2000	SCALE: NOTED; SHEET C-29

File: 515188.dwg Path: P:\OU3-13 ID: MKG Layout Name: Layout1 Date: 09/18/00 - 3:58 P.M.

REVISIONS		
REV	DESCRIPTION	EFFECTIVE DATE:

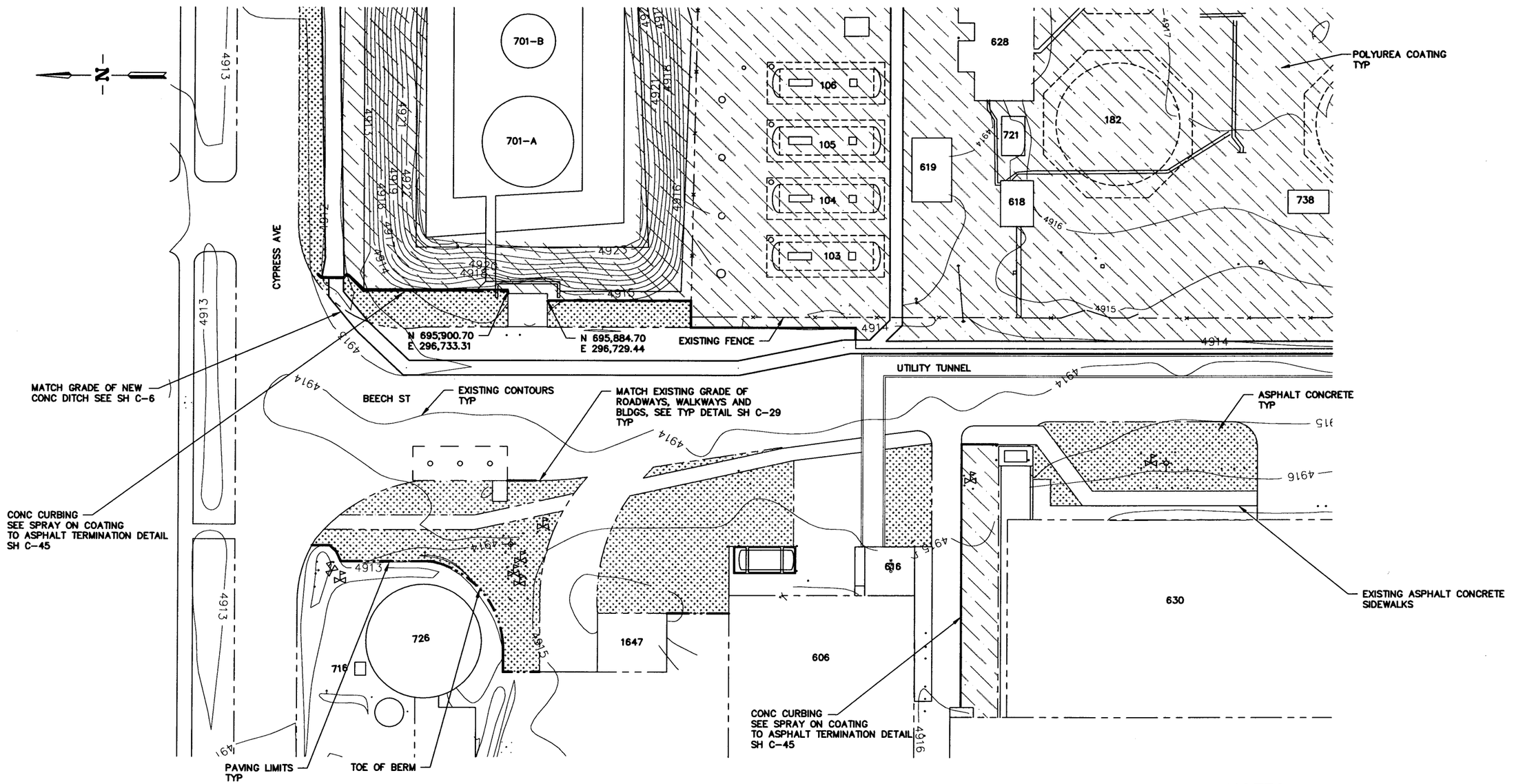

ENLARGED AREA 2 PLAN

NOTES

1. HORIZONTAL COORDINATES ARE INTEC SITE SPECIFIC. VERTICAL DATUM IS NRTS (0.35' HIGHER THAN INTEC DATUM).

REVISION: 0
ORIGINAL SIGNED BY: KURT D. FRITZ
DATE ORIGINAL SIGNED: 9/18/2000
SEAL NUMBER: 9404
ORIGINAL STORED AT: EROB DOCUMENT CONTROL

PROFESSIONAL ENGINEER REGISTERED 9404 STATE OF IDAHO KURT D. FRITZ

FOR DRAWING INDEX SEE DRAWING NO. 515158	SUBCONTRACT NO. S00-588051
SCALE: 1" = 20.0'	REQUESTER: M.S. KAPTEIN
	DESIGN: KURT FRITZ
	DRAWN: Gene K. Mace
	PROJECT NO. 020978
	SPEC CODE
DESIGN PHASE: AFC	FOR REVIEW/APPROVAL SIGNATURES SEE DAR NO. 68366
QUALITY LEVEL: 3	EFFECTIVE DATE: 9/18/2000

INEEL
BECHTEL BWXT IDAHO, LLC

INEEL
OU 3-13 GROUP 1
TANK FARM INTERIM ACTION
PHASE 1 & 2
ENLARGED AREA 2

SIZE	CAGE CODE	INDEX CODE NUMBER AREA	TYPE	CL	ORIG	DWG-	REV
D		200	0100	02	090	515189	

SCALE: 1"=20.0' SHEET C-30

File: 515189.dwg Path: P:\OU3-13 ID: MKG Layout Name: Layout1 Date: 09/18/00 - 4:00 P.M.

REVISIONS		
REV	DESCRIPTION	EFFECTIVE DATE:

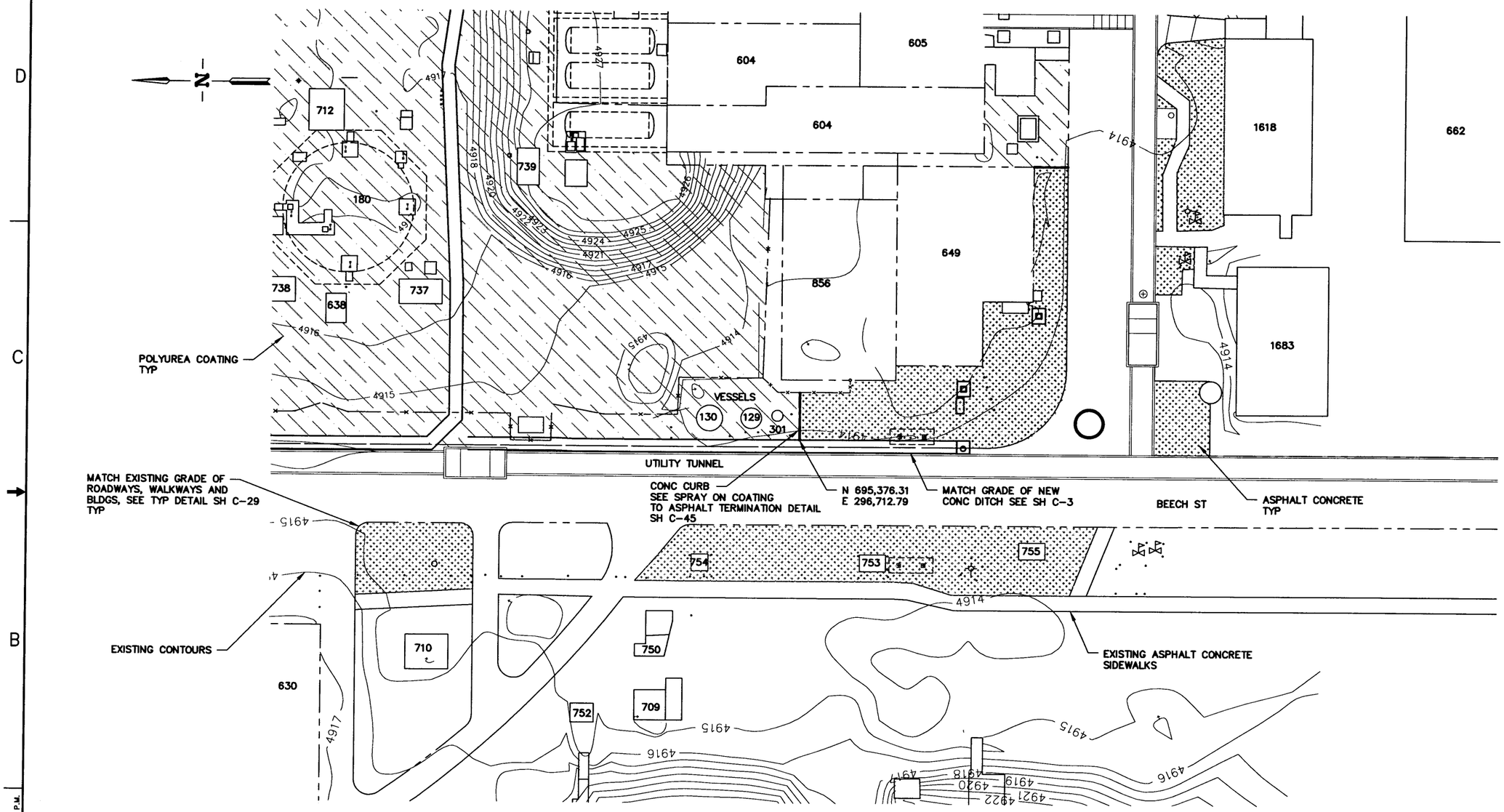

ENLARGED AREA 3 PLAN

NOTES

1. HORIZONTAL COORDINATES ARE INTEC SITE SPECIFIC. VERTICAL DATUM IS NRTS (0.35' HIGHER THAN INTEC DATUM).

REVISION: 0
ORIGINAL SIGNED BY: KURT D. FRITZ
DATE ORIGINAL SIGNED: 9/18/2000
SEAL NUMBER: 9404
ORIGINAL STORED AT: EROB DOCUMENT CONTROL

PROFESSIONAL ENGINEER REGISTERED 9404 STATE OF IDAHO KURT D. FRITZ

FOR DRAWING INDEX SEE DRAWING NO. 515158	SUBCONTRACT NO. S00-588051
SCALE: 1" = 20.0'	REQUESTER: M.S. KAPTEIN
	DESIGN: KURT FRITZ
	DRAWN: Gene K Mace
	PROJECT NO. 020978
	SPEC CODE
DESIGN PHASE: AFC	FOR REVIEW/APPROVAL SIGNATURES SEE DAR NO. 68366
QUALITY LEVEL: 3	EFFECTIVE DATE: 9/18/2000

INEEL (Idaho National Engineering & Environmental Laboratory) BECHTEL BWXT IDAHO, LLC

INEEL
OU 3-13 GROUP 1
TANK FARM INTERIM ACTION
PHASE 1 & 2
ENLARGED AREA 3

SIZE	CAGE CODE	INDEX CODE NUMBER (AREA / TYPE / Q / ORIG)	DWG-	REV
D		200 / 0100 / 02 / 090	515190	
SCALE: 1"=20.0'			SHEET C-31	

File: 515190.dwg Path: P:\OU3-13 ID: MKG Layout Name: Layout1 Date: 09/18/00 - 4:03 P.M.

REVISIONS		
REV	DESCRIPTION	EFFECTIVE DATE:

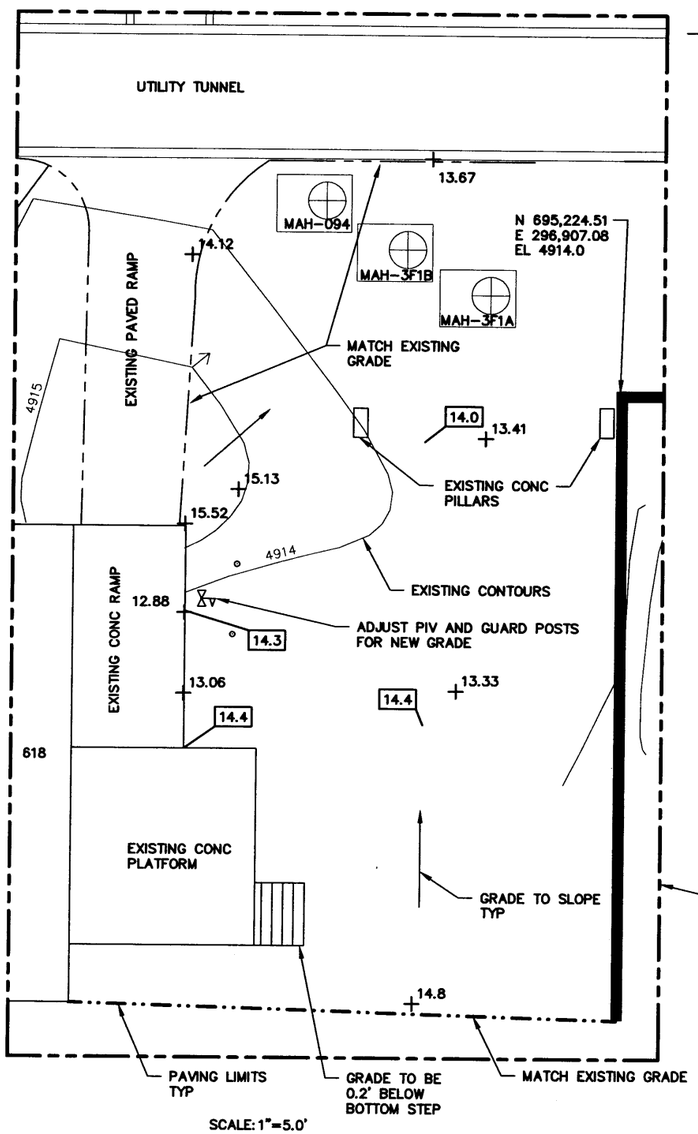

SCALE: 1"=5.0'

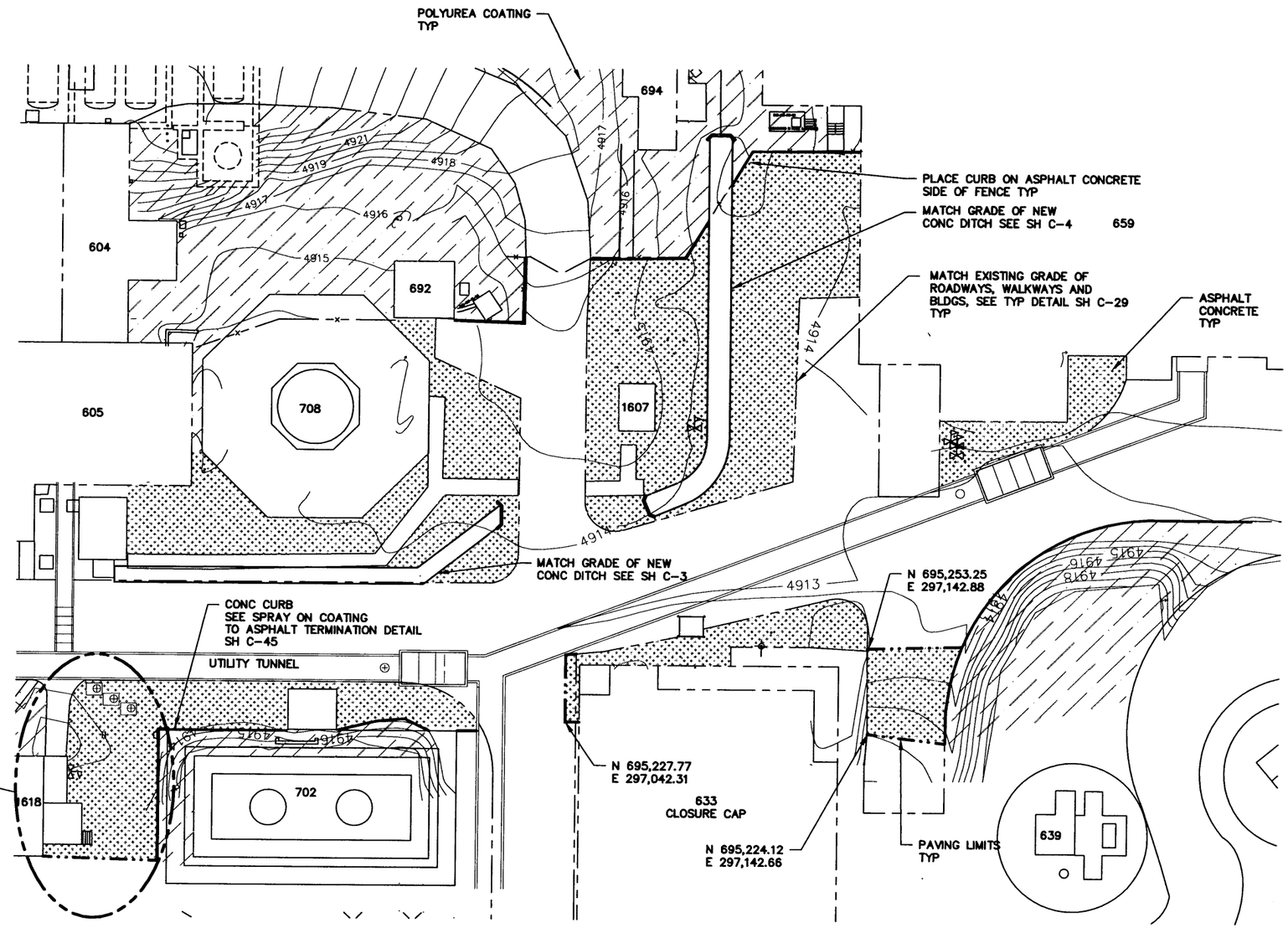

ENLARGED AREA 4 PLAN

SCALE: 1"=20.0'

NOTES

1. HORIZONTAL COORDINATES ARE INTEC SITE SPECIFIC. VERTICAL DATUM IS NRTS (0.35' HIGHER THAN INTEC DATUM).

REVISION: 0
ORIGINAL SIGNED BY: KURT D. FRITZ
DATE ORIGINAL SIGNED: 9/18/2000
SEAL NUMBER: 9404
ORIGINAL STORED AT: EROB DOCUMENT CONTROL

PROFESSIONAL ENGINEER REGISTERED 9404 STATE OF IDAHO KURT D. FRITZ

FOR DRAWING INDEX SEE DRAWING NO. 515158	SUBCONTRACT NO. S00-588051	INEEL
SCALE: 1" = 20.0'	REQUESTER: M.S. KAPTEIN	INEEL OU 3-13 GROUP 1 TANK FARM INTERIM ACTION PHASE 1 & 2 ENLARGED AREA 4
SCALE: 1" = 5.0'	DESIGN: KURT FRITZ	
	DRAWN: Gene K Mace	
	PROJECT NO. 020978	
	SPEC CODE	
DESIGN PHASE: AFC	FOR REVIEW/APPROVAL SIGNATURES SEE DAR NO. 68366	SIZE D; CAGE CODE; INDEX CODE NUMBER AREA 200 TYPE 0100 CL 02 ORIG 090; DWG-515191; REV
QUALITY LEVEL: 3	EFFECTIVE DATE: 9/18/2000	SCALE: NOTED; SHEET C-32

File: 515191.dwg ID: MKG Layout Name: Layout1
Path: P:\OU3-13 Date: 09/18/00 - 4:04 P.M.

REVISIONS		
REV	DESCRIPTION	EFFECTIVE DATE:

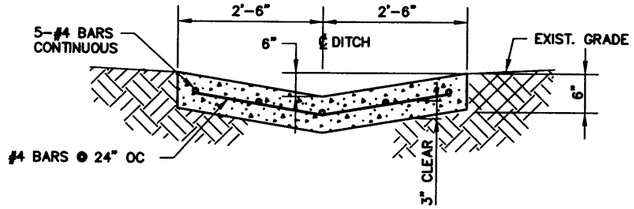

TYP CONCRETE DITCH DETAIL (11 / C-3)

TYPE 1
NTS

REF C-6 C-8

NOTES

1. PROVIDE IMPRESSED CONTRACTION JOINTS AT 5'-0" OC MAXIMUM.
2. PROVIDE EXPANSION JOINTS AT 40'-0" OC MAXIMUM. SEE TYP DETAIL THIS SHEET.

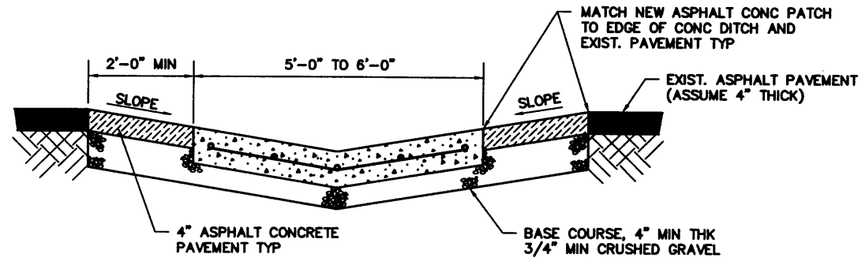

TYP CONCRETE DITCH THROUGH PAVEMENT DETAIL (14 / C-6)

NTS

NOTES

1. ALL AREAS TO BE PATCHED SHALL HAVE THE EXIST.ING PAVEMENT SAW CUT TO CLEAN STRAIGHT LINES.
2. EDGES OF EXIST.ING PAVEMENT AND NEW CONCRETE SHALL HAVE A TACK COAT APPLIED PRIOR TO THE PLACEMENT OF NEW ASPHALT CONCRETE.

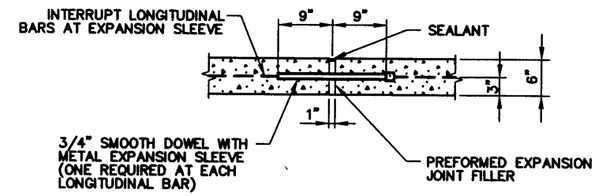

TYP EXPANSION JOINT DETAIL

NTS

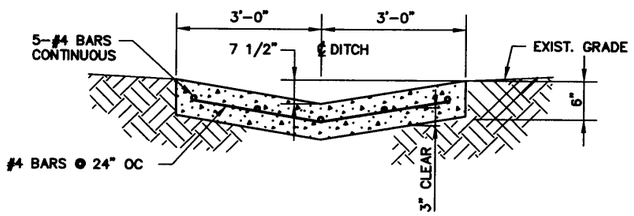

TYP CONCRETE DITCH DETAIL (12 / C-6)

TYPE 2
NTS

NOTES

1. PROVIDE IMPRESSED CONTRACTION JOINTS AT 5'-0" OC MAXIMUM.
2. PROVIDE EXPANSION JOINTS AT 40'-0" OC MAXIMUM. SEE TYP DETAIL THIS SHEET.

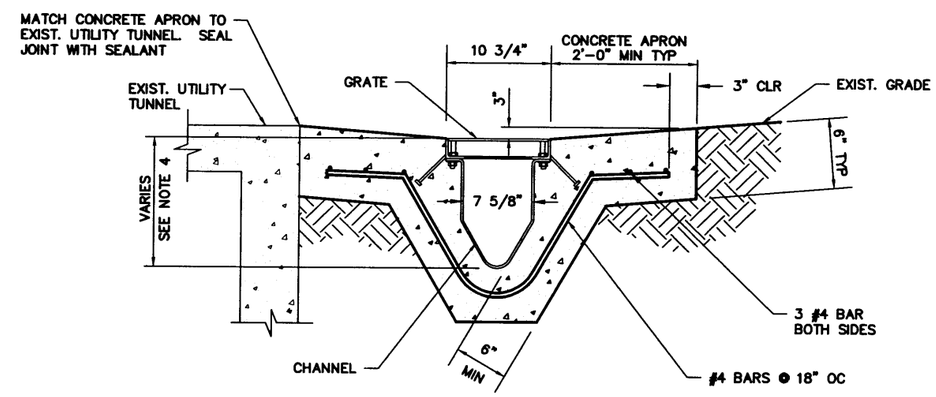

TYP 8" TRENCH DRAIN SECTION (A / C-3)

NTS

NOTES

1. PROVIDE IMPRESSED CONTRACTION JOINTS AT 5'-0" OC MAXIMUM.
2. PROVIDE EXPANSION JOINTS AT 50'-0" OC MAXIMUM.
3. INSTALL PER MANUFACTURERS RECOMMENDATIONS.
4. DEPTH VARIES FROM 5 1/2" TO 29 1/2", SEE MANUFACTURERS DATA.

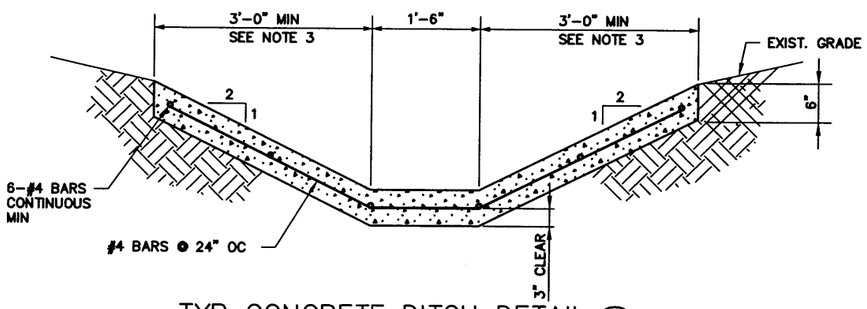

TYP CONCRETE DITCH DETAIL (13 / C-3)

TYPE 3
NTS

REF C-4 C-5 C-6 C-7 C-9

NOTES

1. PROVIDE IMPRESSED CONTRACTION JOINTS AT 5'-0" OC MAXIMUM.
2. PROVIDE EXPANSION JOINTS AT 40'-0" OC MAXIMUM. SEE TYP DETAIL THIS SHEET.
3. CONCRETE DITCH SHALL EXTEND TO THE TOP OF EXIST.ING DITCH BANK.

REVISION: 0
ORIGINAL SIGNED BY: KURT D. FRITZ
DATE ORIGINAL SIGNED: 9/18/2000
SEAL NUMBER: 9404
ORIGINAL STORED AT: EROB DOCUMENT CONTROL

PROFESSIONAL ENGINEER REGISTERED 9404 STATE OF IDAHO KURT D. FRITZ

FOR DRAWING INDEX SEE DRAWING NO. 515158	SUBCONTRACT NO. S00-588051	INEEL (Idaho National Engineering & Environmental Laboratory) BECHTEL BWXT IDAHO, LLC
NO SCALE	REQUESTER: M.S. KAPTEIN DESIGN: KURT FRITZ DRAWN: ROB HERGESHEIMER PROJECT NO. 020978 SPEC CODE	INEEL OU 3-13 GROUP 1 TANK FARM INTERIM ACTION PHASE 1 & 2 DITCH DETAILS AND SECTIONS
DESIGN PHASE: AFC	FOR REVIEW/APPROVAL SIGNATURES SEE DAR NO. 68366	SIZE D; CAGE CODE; INDEX CODE NUMBER AREA 200, TYPE 0100, Q 62, DBG 090; DWG- 515192; REV
QUALITY LEVEL: 3	EFFECTIVE DATE: 9/18/2000	SCALE: NONE; SHEET C-33

File: C-33.DWG ID: RDH5
Path: G:\OU3-13-TANKFARM\9-8-00 Drawn in Model Space
Rebuilt89/RM/00 - 4:41 P.M.

REVISIONS		
REV	DESCRIPTION	EFFECTIVE DATE:

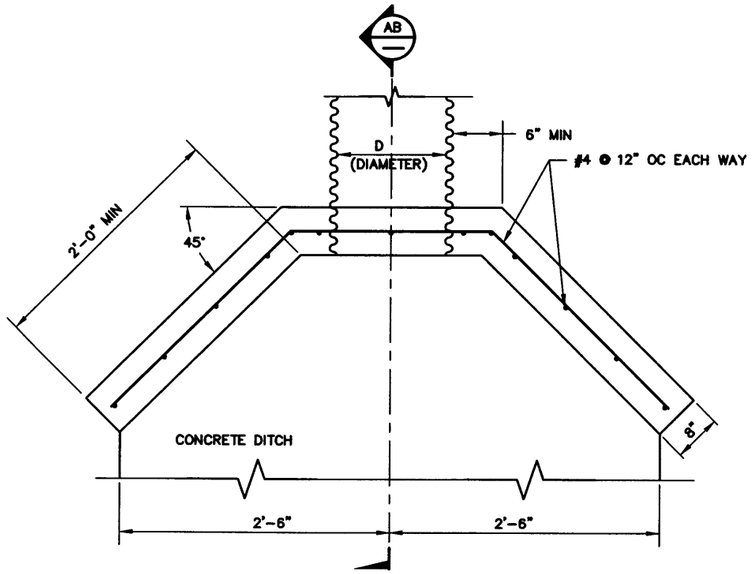

PLAN

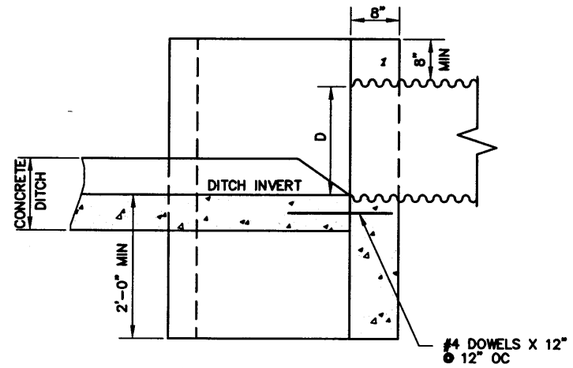

SECTION (AB)

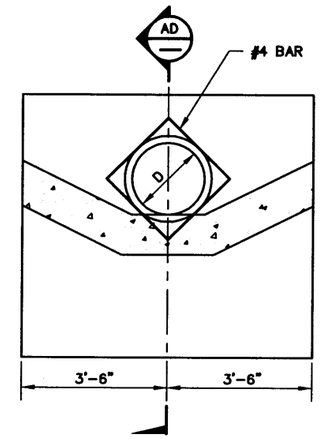

ELEVATION

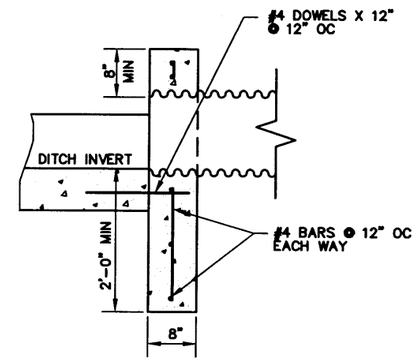

SECTION (AD)

TYPICAL HEADWALL WITH WINGS DETAIL (15 / C-3)

TYPE 1 DITCH — NTS

REF: C-8, C-13, C-15, C-16

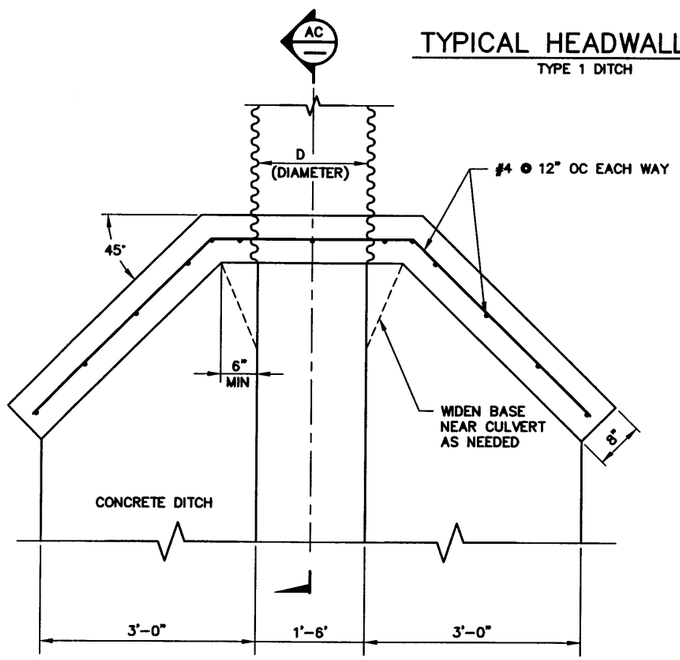

PLAN

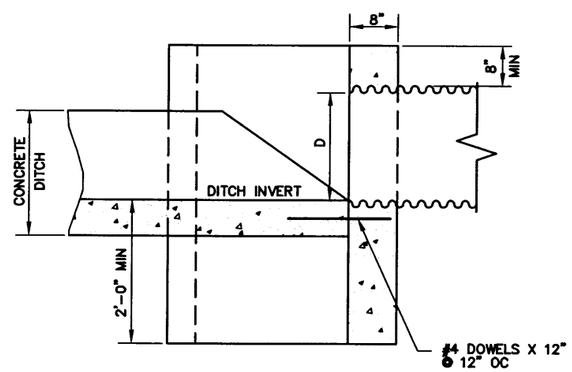

SECTION (AC)

TYPICAL ENDWALL DETAIL (17 / C-3)

TYPE 3 DITCH — NTS

REF: C-4, C-5, C-6, C-7, C-9, C-12, C-14, C-15, C-18

TYPICAL HEADWALL WITH WINGS DETAIL (16 / C-4)

TYPE 3 DITCH — NTS

REF: C-5, C-6, C-7, C-9, C-12, C-14, C-18

NOTES

1. CONCRETE SHALL BE CLASS 40. REINFORCING STEEL SHALL BE #4 AS SHOWN.
2. PROVIDE 3/4" CHAMFER ON ALL EXPOSED CORNERS.

REVISION: 0
ORIGINAL SIGNED BY: KURT D. FRITZ
DATE ORIGINAL SIGNED: 9/18/2000
SEAL NUMBER: 9404
ORIGINAL STORED AT: EROB DOCUMENT CONTROL

PROFESSIONAL ENGINEER REGISTERED 9404 STATE OF IDAHO KURT D. FRITZ

FOR DRAWING INDEX SEE DRAWING NO. 515158	SUBCONTRACT NO. S00-588051	INEEL (Idaho National Engineering & Environmental Laboratory) BECHTEL BWXT IDAHO, LLC
NO SCALE	REQUESTER: M.S. KAPTEIN DESIGN: KURT FRITZ DRAWN: ROB HERGESHEIMER PROJECT NO. 020978 SPEC CODE	INEEL OU 3-13 GROUP 1 TANK FARM INTERIM ACTION PHASE 1 & 2 HEADWALL AND ENDWALL DETAILS & SECTIONS
DESIGN PHASE: AFC	FOR REVIEW/APPROVAL SIGNATURES SEE DAR NO. 68366	SIZE D; CAGE CODE; INDEX CODE NUMBER: AREA 200, TYPE 0100, CL 62, ORG 090; DWG-515193; REV
QUALITY LEVEL: 3	EFFECTIVE DATE: 9/18/2000	SCALE: NONE; SHEET C-34

FWT-D1-REV 3.1

File: C-34.DWG ID: RDH5 Drawn in Model Space
Path: G:\OU3-13-TANKFARM\9-6-00 Default09/06/00 - 4:43 P.M.

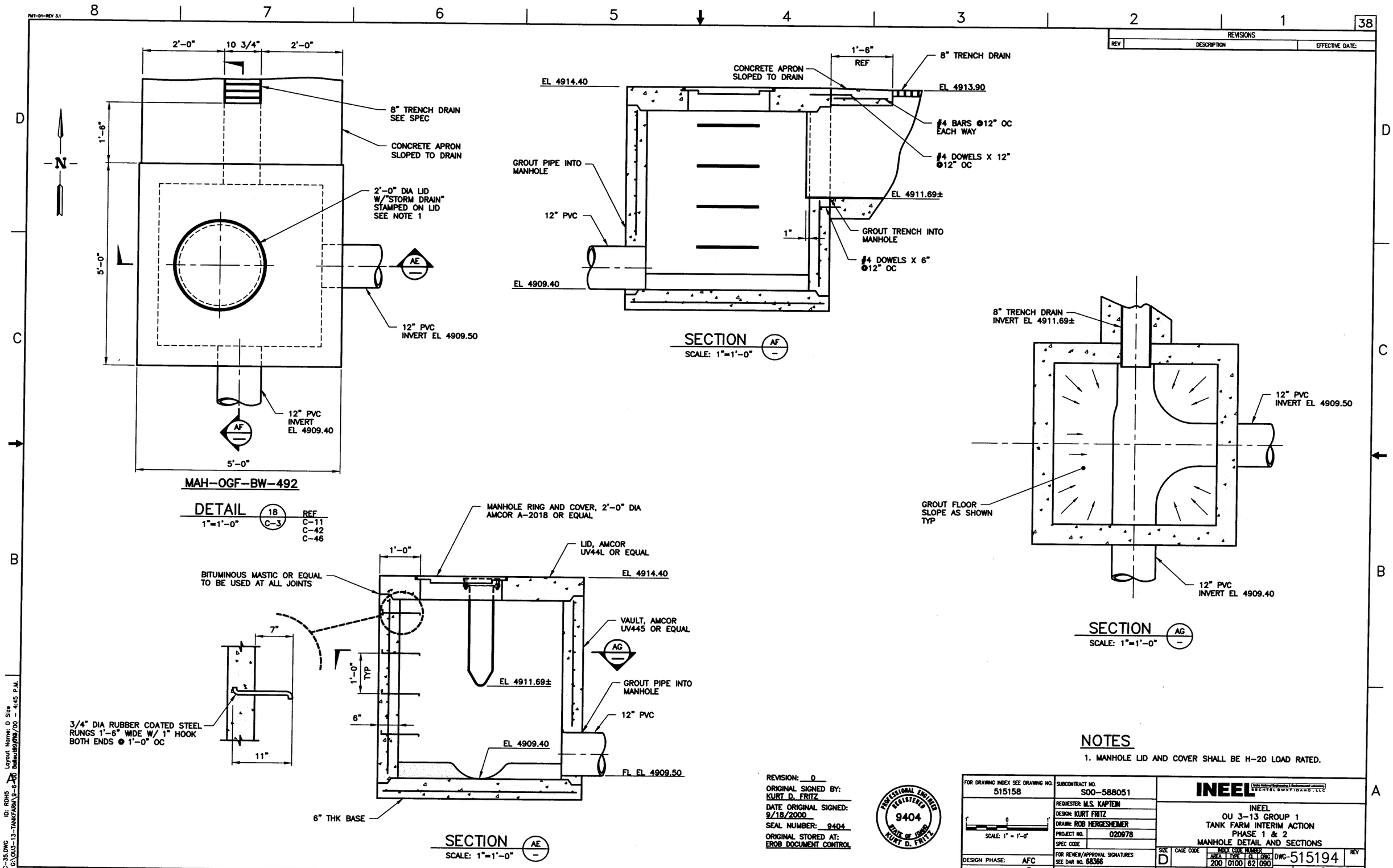

NOTES

1. MANHOLE LID AND COVER SHALL BE H-20 LOAD RATED.

REVISION: 0
ORIGINAL SIGNED BY: KURT D. FRITZ
DATE ORIGINAL SIGNED: 9/18/2000
SEAL NUMBER: 9404
ORIGINAL STORED AT: EROB DOCUMENT CONTROL

PROFESSIONAL ENGINEER REGISTERED 9404 STATE OF IDAHO KURT D. FRITZ

FOR DRAWING INDEX SEE DRAWING NO. 515158	SUBCONTRACT NO. S00-588051	INEEL Idaho National Engineering & Environmental Laboratory BECHTEL BWXT IDAHO, LLC
SCALE: 1" = 1'-0"	REQUESTER: M.S. KAPTEIN	INEEL OU 3-13 GROUP 1 TANK FARM INTERIM ACTION PHASE 1 & 2 MANHOLE DETAIL AND SECTIONS
	DESIGN: KURT FRITZ	
	DRAWN: ROB HERGESHEIMER	
	PROJECT NO. 020978	
	SPEC CODE	
DESIGN PHASE: AFC	FOR REVIEW/APPROVAL SIGNATURES SEE DAR NO. 68366	SIZE D · CAGE CODE · INDEX CODE NUMBER AREA 200 TYPE 0100 CL 62 ORIG 090 · DWG-515194 · REV
QUALITY LEVEL: 3	EFFECTIVE DATE: 9/18/2000	SCALE: 1"=1'-0" · SHEET C-35

REVISIONS

REV	DESCRIPTION	EFFECTIVE DATE:

38

FMT-01-REV 3.1

File: C-35.DWG ID: RDH5 Layout Name: D Size
Path: G:\OU3-13-TANKFARM\9-6-00 Dalleu\09/06/00 - 4:45 P.M.

REVISIONS		
REV	DESCRIPTION	EFFECTIVE DATE:

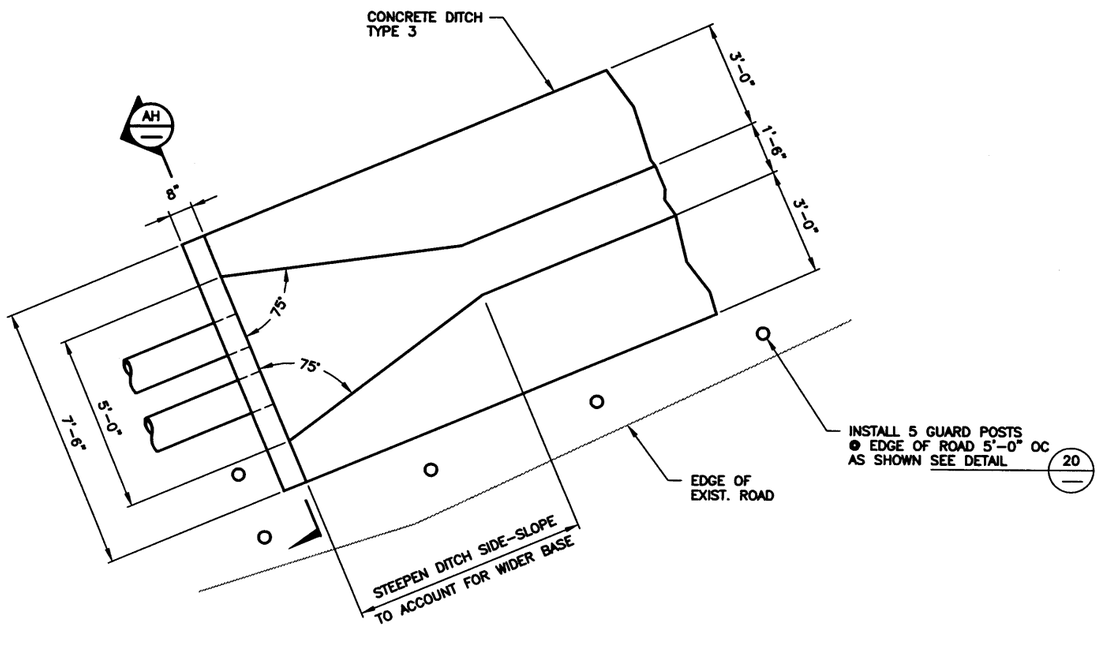

DETAIL 19 C-3 REF C-4 C-12 C-13
SCALE: 1/2"=1'-0"

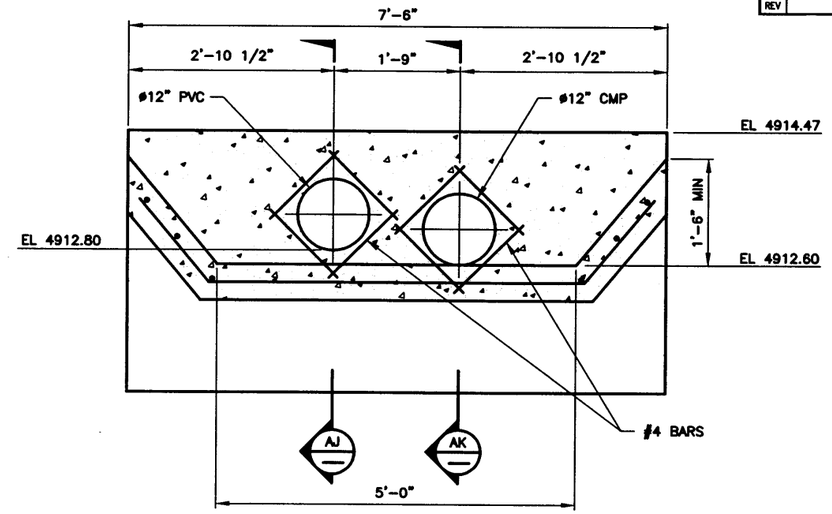

SECTION AH
SCALE: 1"=1'-0"

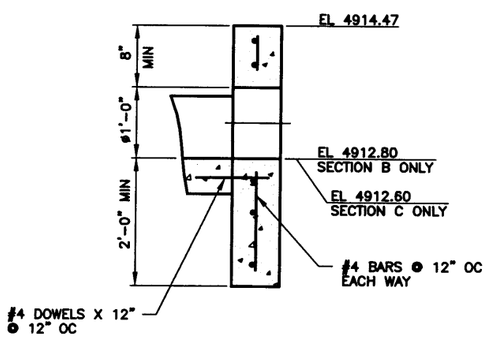

SECTION AJ AK
SCALE: 1"=1'-0"

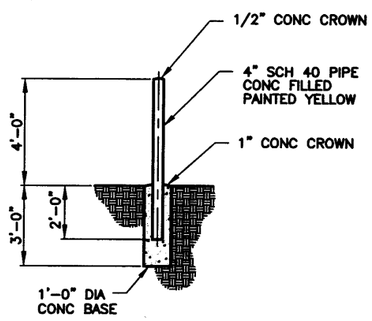

DETAIL 20 REF C-24
NTS

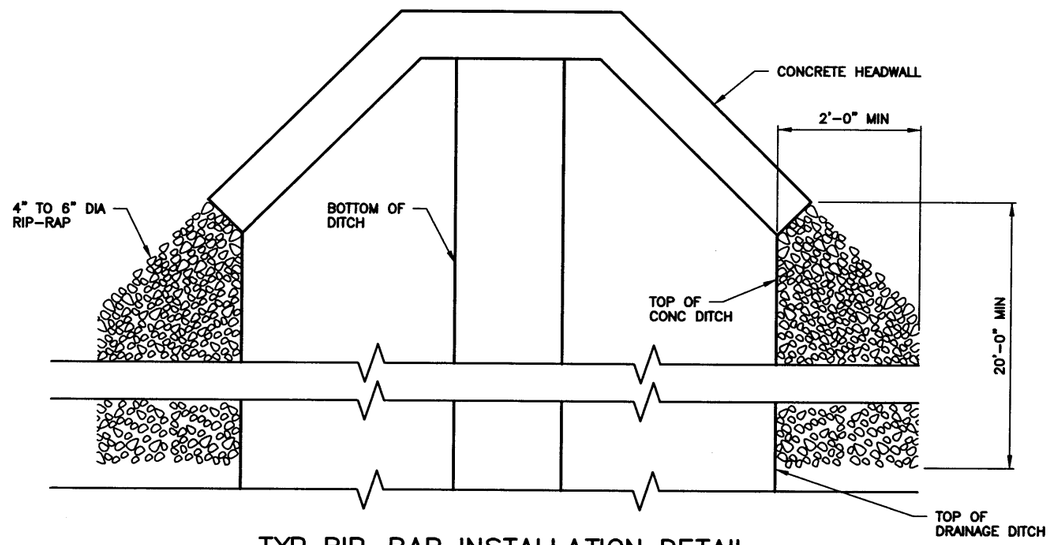

TYP RIP-RAP INSTALLATION DETAIL REF C-7
SCALE: 1"=1'-0"

NOTES

1. PROVIDE 3/4" CHAMFER ON ALL EXPOSED CORNERS.

REVISION: 0
ORIGINAL SIGNED BY: KURT D. FRITZ
DATE ORIGINAL SIGNED: 9/18/2000
SEAL NUMBER: 9404
ORIGINAL STORED AT: EROB DOCUMENT CONTROL

PROFESSIONAL ENGINEER REGISTERED 9404 STATE OF IDAHO KURT D. FRITZ

FOR DRAWING INDEX SEE DRAWING NO.	515158
SCALE: 1/2" = 1'-0"	
SCALE: 1" = 1'-0"	
DESIGN PHASE:	AFC
QUALITY LEVEL:	3
SUBCONTRACT NO.	S00-588051
REQUESTER:	M.S. KAPTEIN
DESIGN:	KURT FRITZ
DRAWN:	ROB HERGESHEIMER
PROJECT NO.	020978
SPEC CODE	
FOR REVIEW/APPROVAL SIGNATURES SEE DAR NO. 68366	
EFFECTIVE DATE:	9/18/2000

INEEL
Idaho National Engineering & Environmental Laboratory
BECHTEL BWXT IDAHO, LLC

INEEL
OU 3-13 GROUP 1
TANK FARM INTERIM ACTION
PHASE 1 & 2
ENDWALL DETAIL AND SECTIONS

SIZE	CAGE CODE	INDEX CODE NUMBER AREA	TYPE	Q.	ORG.	DWG-515195	REV
D		200	0100	62	090		

SCALE: NOTED
SHEET C-36

File: C-36.DWG
Path: G:\OU3-13-TANKFARM\3-6-00
ID: RDH5
Layout Name: D Size
Date:09/06/00 - 4:46 P.M.

REVISIONS		
REV	DESCRIPTION	EFFECTIVE DATE:

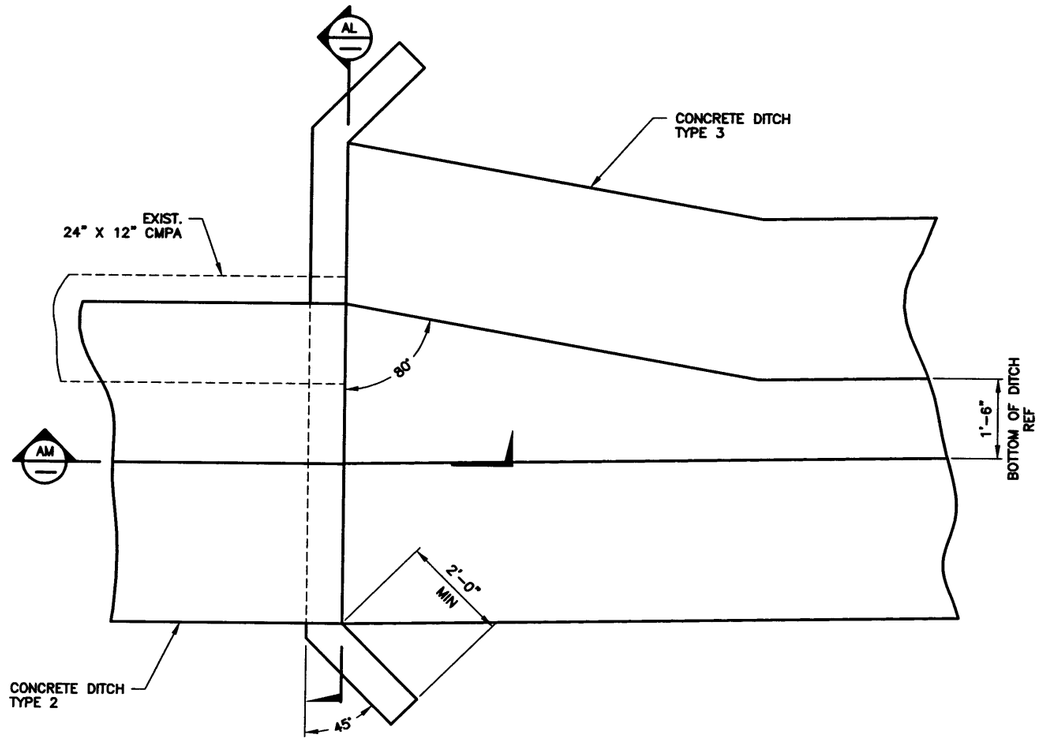

DETAIL 21 C-6 REF C-14
SCALE: 3/4"=1'-0"

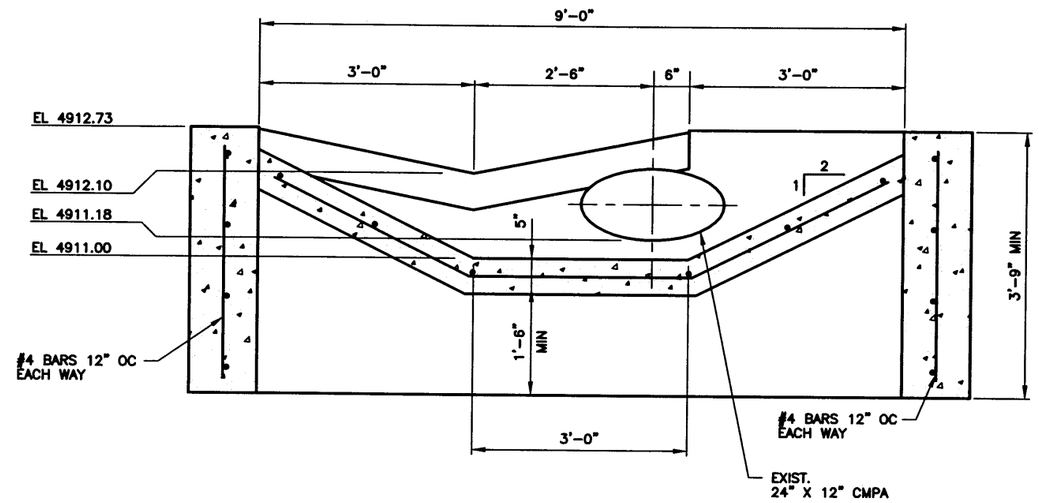

SECTION AL
SCALE: 1"=1'-0"

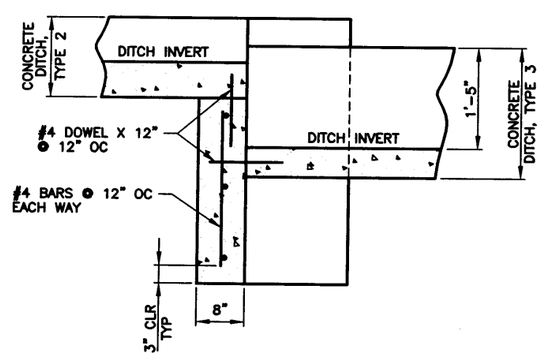

SECTION AM
SCALE:1"=1-0"

NOTES

1. PROVIDE 3/4" CHAMFER ON ALL EXPOSED CORNERS.

REVISION: 0
ORIGINAL SIGNED BY: KURT D. FRITZ
DATE ORIGINAL SIGNED: 9/18/2000
SEAL NUMBER: 9404
ORIGINAL STORED AT: EROB DOCUMENT CONTROL

PROFESSIONAL ENGINEER REGISTERED 9404 STATE OF IDAHO KURT D. FRITZ

FOR DRAWING INDEX SEE DRAWING NO. 515158	SUBCONTRACT NO. S00-588051	INEEL
SCALE: 1" = 1'-0"	REQUESTER: M.S. KAPTEIN	INEEL OU 3-13 GROUP 1 TANK FARM INTERIM ACTION PHASE 1 & 2 ENDWALL DETAIL AND SECTIONS
SCALE: 3/4" = 1'-0"	DESIGN: KURT FRITZ	
	DRAWN: ROB HERGESHEIMER	
	PROJECT NO. 020978	
	SPEC CODE	
DESIGN PHASE: AFC	FOR REVIEW/APPROVAL SIGNATURES SEE DAR NO. 68366	SIZE D · CAGE CODE · INDEX CODE NUMBER AREA 200 TYPE 0100 CL 62 ORIG 090 · DWG-515196 · REV
QUALITY LEVEL: 3	EFFECTIVE DATE: 9/18/2000	SCALE: NOTED · SHEET C-37

File: C-37.DWG ID: RDH5 Layout Name: D Size
Path: G:\OU3-13-TANKFARM\9-6-00 Dated:09/18/00 - 5:03 P.M.

REVISIONS		
REV	DESCRIPTION	EFFECTIVE DATE:

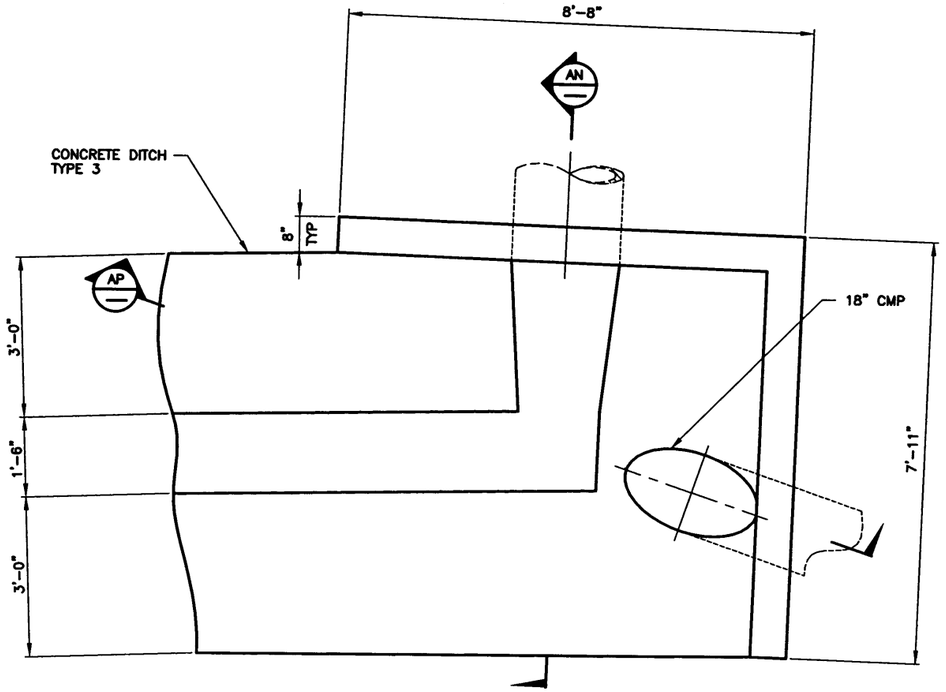

DETAIL 22 C-7
SCALE: 3/4"=1'-0"
REF C-8 C-14 C-16

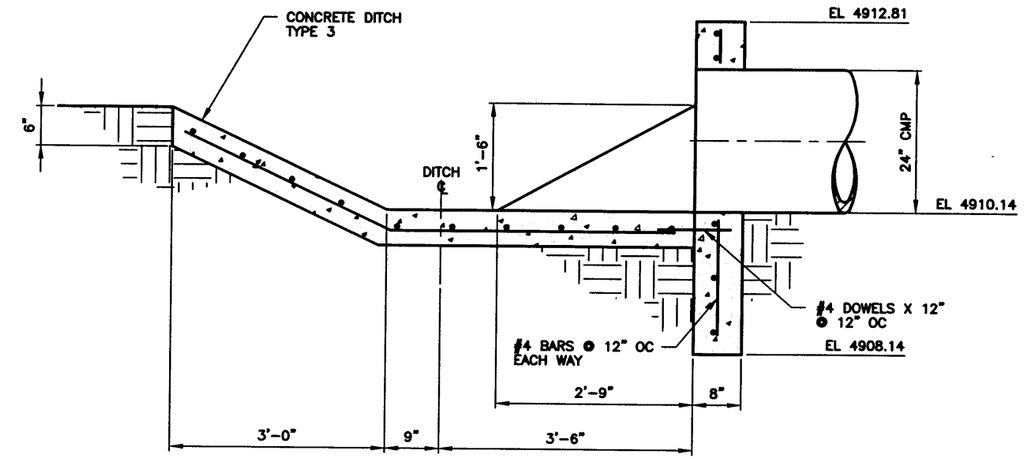

SECTION AN
SCALE: 1"=1'-0"

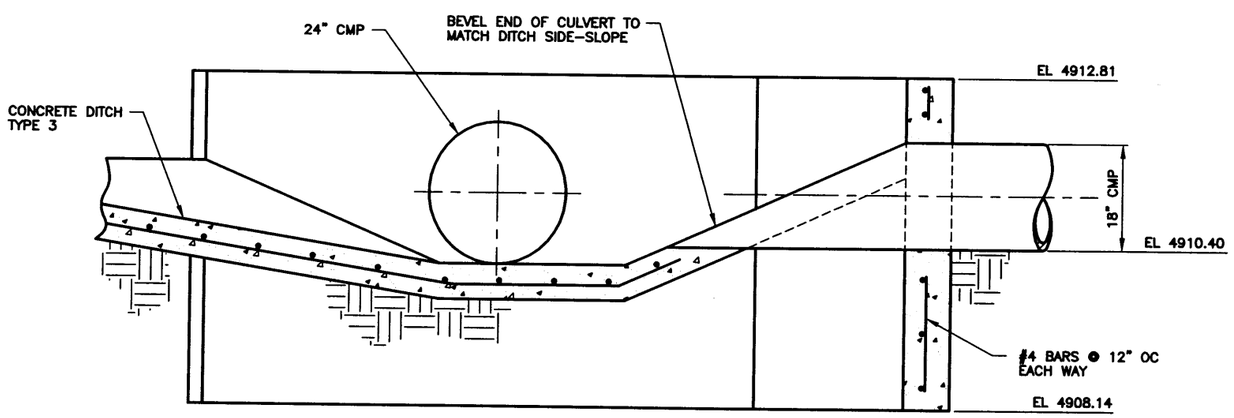

SECTION AP
SCALE: 1"=1'-0"

NOTES

1. PROVIDE 3/4" CHAMFER ON ALL EXPOSED CORNERS.

REVISION: 0
ORIGINAL SIGNED BY: KURT D. FRITZ
DATE ORIGINAL SIGNED: 9/18/2000
SEAL NUMBER: 9404
ORIGINAL STORED AT: EROB DOCUMENT CONTROL

PROFESSIONAL ENGINEER REGISTERED 9404 STATE OF IDAHO KURT D. FRITZ

FOR DRAWING INDEX SEE DRAWING NO. 515158	SUBCONTRACT NO. S00-588051	INEEL
SCALE: 3/4" = 1'-0"	REQUESTER: M.S. KAPTEIN	INEEL OU 3-13 GROUP 1 TANK FARM INTERIM ACTION PHASE 1 & 2 HEADWALL DETAIL AND SECTIONS
SCALE: 1" = 1'-0"	DESIGN: KURT FRITZ	
	DRAWN: ROB HERGESHEIMER	
	PROJECT NO. 020978	
	SPEC CODE	
DESIGN PHASE: AFC	FOR REVIEW/APPROVAL SIGNATURES SEE DAR NO. 68366	SIZE D; CAGE CODE; INDEX CODE NUMBER AREA 200 TYPE 0100 CL 62 ORIG 090; DWG-515197; REV
QUALITY LEVEL: 3	EFFECTIVE DATE: 9/18/2000	SCALE: NOTED; SHEET C-38

File: C-38.DWG ID: RDH5 Layout Name: D Size
Path: G:\OU3-13-TANKFARM\9-6-00 Dalleu\09/18/00 - 5:05 P.M.

REVISIONS		
REV	DESCRIPTION	EFFECTIVE DATE:

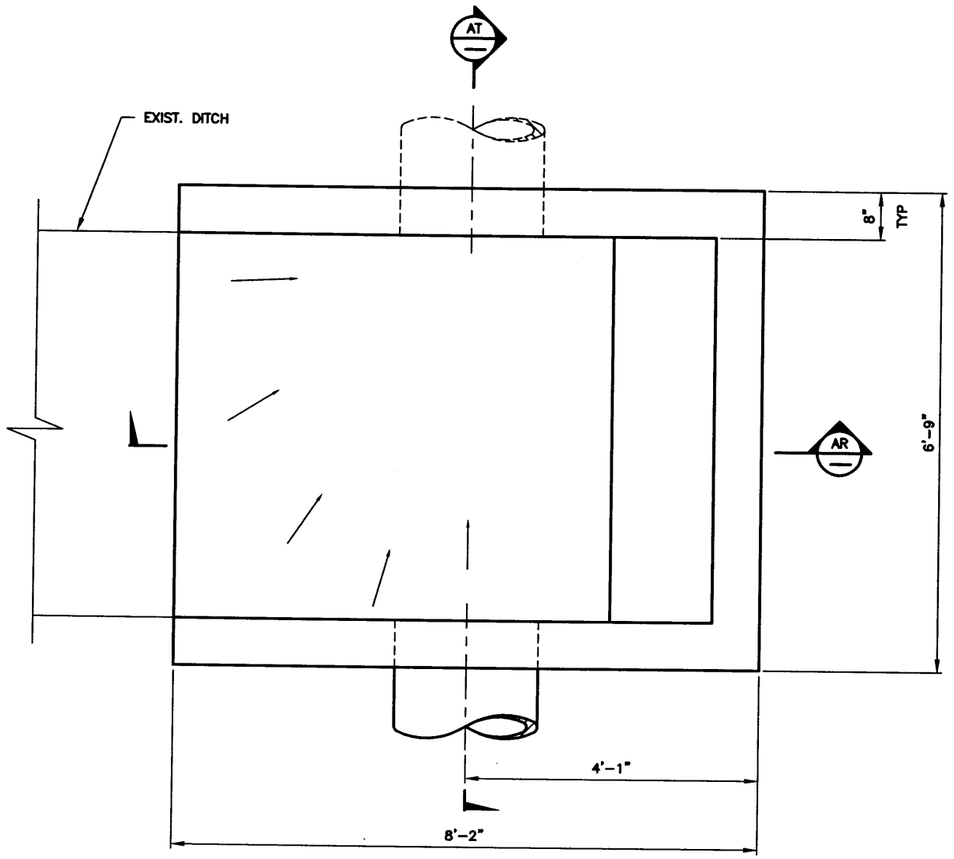

DETAIL 23 C-7 REF C-14
1"=1'-0"

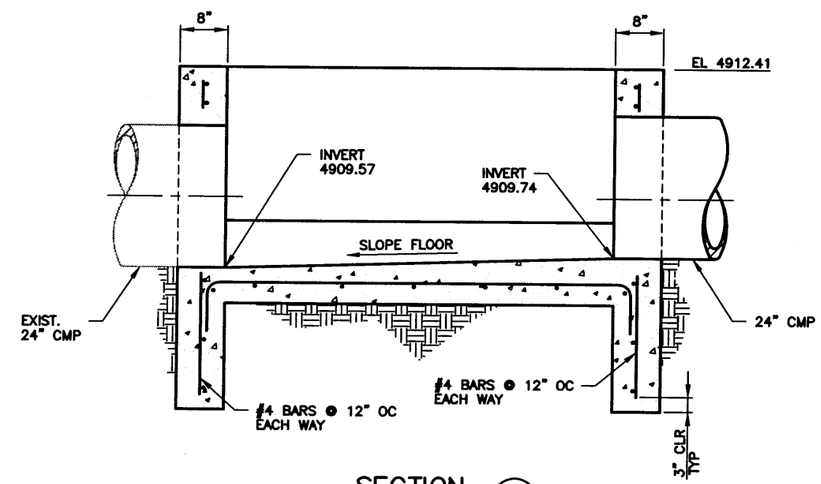

SECTION AT
SCALE: 1"=1'-0"

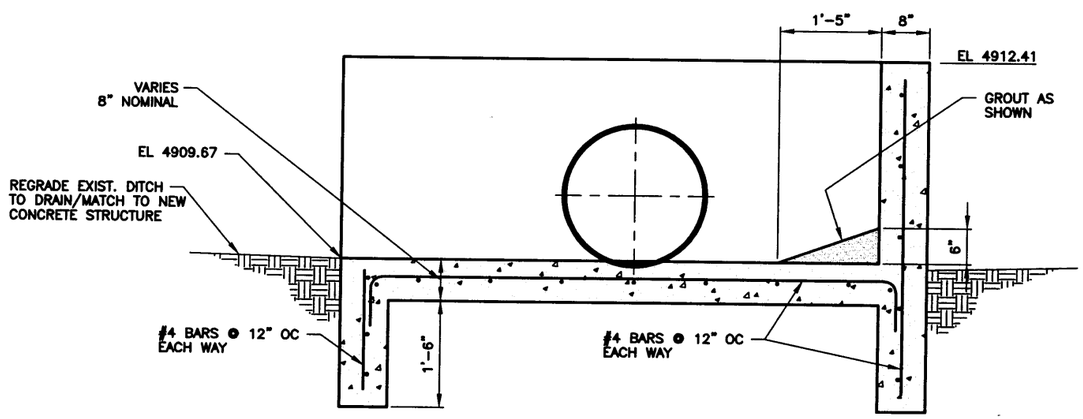

SECTION AR
SCALE: 1"=1'-0"

NOTES

1. PROVIDE 3/4" CHAMFER ON ALL EXPOSED CORNERS.

REVISION: 0
ORIGINAL SIGNED BY: KURT D. FRITZ
DATE ORIGINAL SIGNED: 9/18/2000
SEAL NUMBER: 9404
ORIGINAL STORED AT: EROB DOCUMENT CONTROL

PROFESSIONAL ENGINEER REGISTERED 9404 STATE OF IDAHO KURT D. FRITZ

FOR DRAWING INDEX SEE DRAWING NO. 515158	SUBCONTRACT NO. S00-588051	INEEL
SCALE: 1" = 1'-0"	REQUESTER: M.S. KAPTEIN	INEEL OU 3-13 GROUP 1 TANK FARM INTERIM ACTION PHASE 1 & 2 HEADWALL DETAIL AND SECTIONS
	DESIGN: KURT FRITZ	
	DRAWN: ROB HERGESHEIMER	
	PROJECT NO. 020978	
	SPEC CODE	
DESIGN PHASE: AFC	FOR REVIEW/APPROVAL SIGNATURES SEE DAR NO. 68366	SIZE D · CAGE CODE · INDEX CODE NUMBER AREA 200 TYPE 0100 CL 62 ORIG 090 · DWG-515198 · REV
QUALITY LEVEL: 3	EFFECTIVE DATE: 9/18/2000	SCALE: 1"=1'-0" · SHEET C-39

File: C-39.DWG ID: RDH5 Layout Name: D Size
Path: G:\OU3-13-TANKFARM\9-6-00 Date: 9/18/00 - 5:08 P.M.

REVISIONS		
REV	DESCRIPTION	EFFECTIVE DATE:

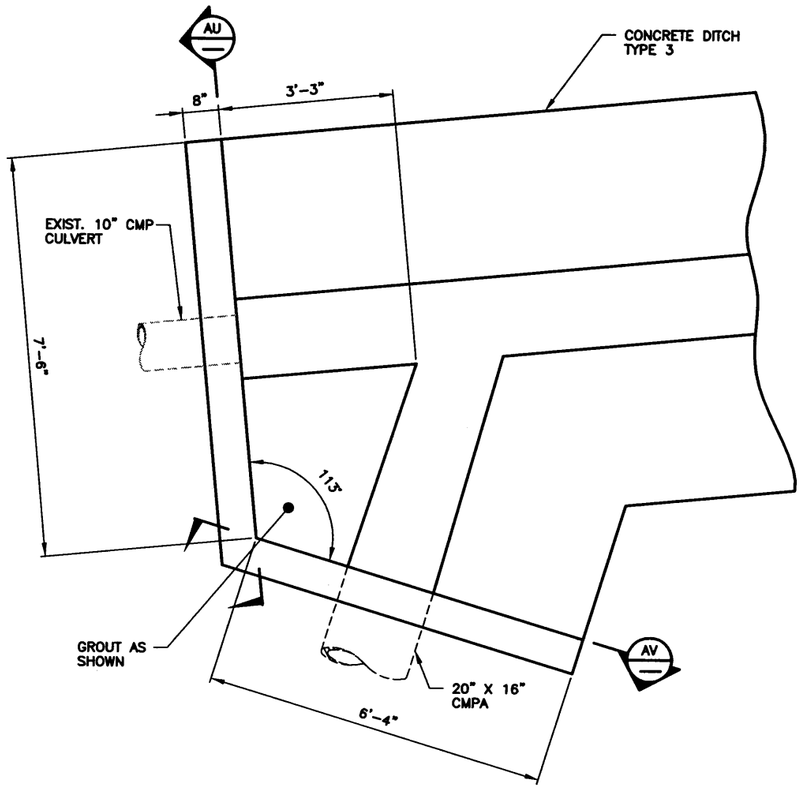

DETAIL (24 / C-9) REF C-18
SCALE: 3/4"=1'-0"

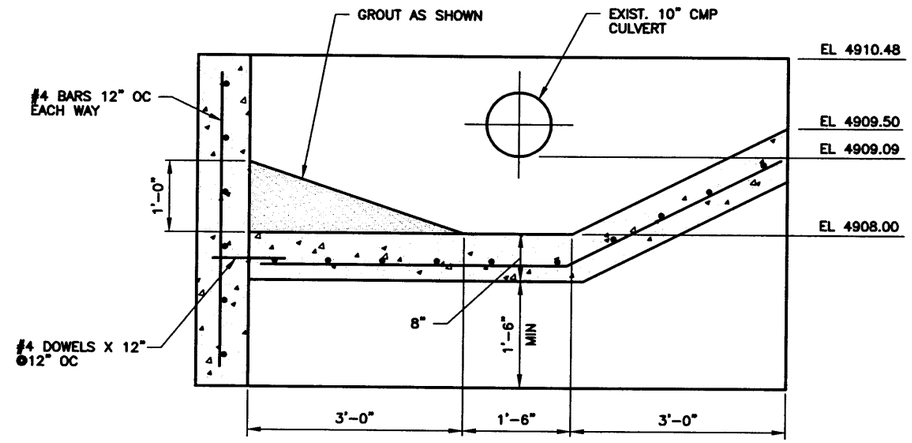

SECTION (AU)
1"=1'-0"

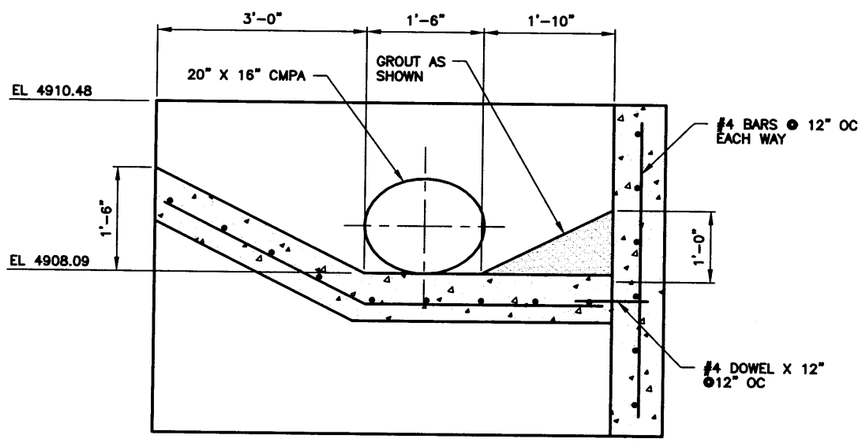

SECTION (AV)
1"=1'-0"

NOTES

1. PROVIDE 3/4" CHAMFER ON ALL EXPOSED CORNERS.

REVISION: 0
ORIGINAL SIGNED BY: KURT D. FRITZ
DATE ORIGINAL SIGNED: 9/18/2000
SEAL NUMBER: 9404
ORIGINAL STORED AT: EROB DOCUMENT CONTROL

PROFESSIONAL ENGINEER REGISTERED 9404 STATE OF IDAHO KURT D. FRITZ

FOR DRAWING INDEX SEE DRAWING NO. 515158	SUBCONTRACT NO. S00-588051	INEEL (Idaho National Engineering & Environmental Laboratory) LOCKHEED MARTIN IDAHO, LLC
SCALE: 3/4" = 1'-0" / SCALE: 1" = 1'-0"	REQUESTER: M.S. KAPTEIN	INEEL OU 3-13 GROUP 1 TANK FARM INTERIM ACTION PHASE 1 & 2 ENDWALL DETAIL AND SECTIONS
	DESIGN: KURT FRITZ	
	DRAWN: ROB HERGESHEIMER	
	PROJECT NO. 020978	
	SPEC CODE	
DESIGN PHASE: AFC	FOR REVIEW/APPROVAL SIGNATURES SEE DAR NO. 68366	SIZE: D; CAGE CODE; INDEX CODE NUMBER: AREA 200, TYPE 0100, CL 62, ORG 090; DWG-515199; REV
QUALITY LEVEL: 3	EFFECTIVE DATE: 9/18/2000	SCALE: NOTED; SHEET C-40

File: C-40.DWG Path: G:\003-13-TANKFARM\3-6-00 ID: RDH5 Layout Name: D Size Date:09/06/00 - 5:15 P.M.

REVISIONS		
REV	DESCRIPTION	EFFECTIVE DATE:

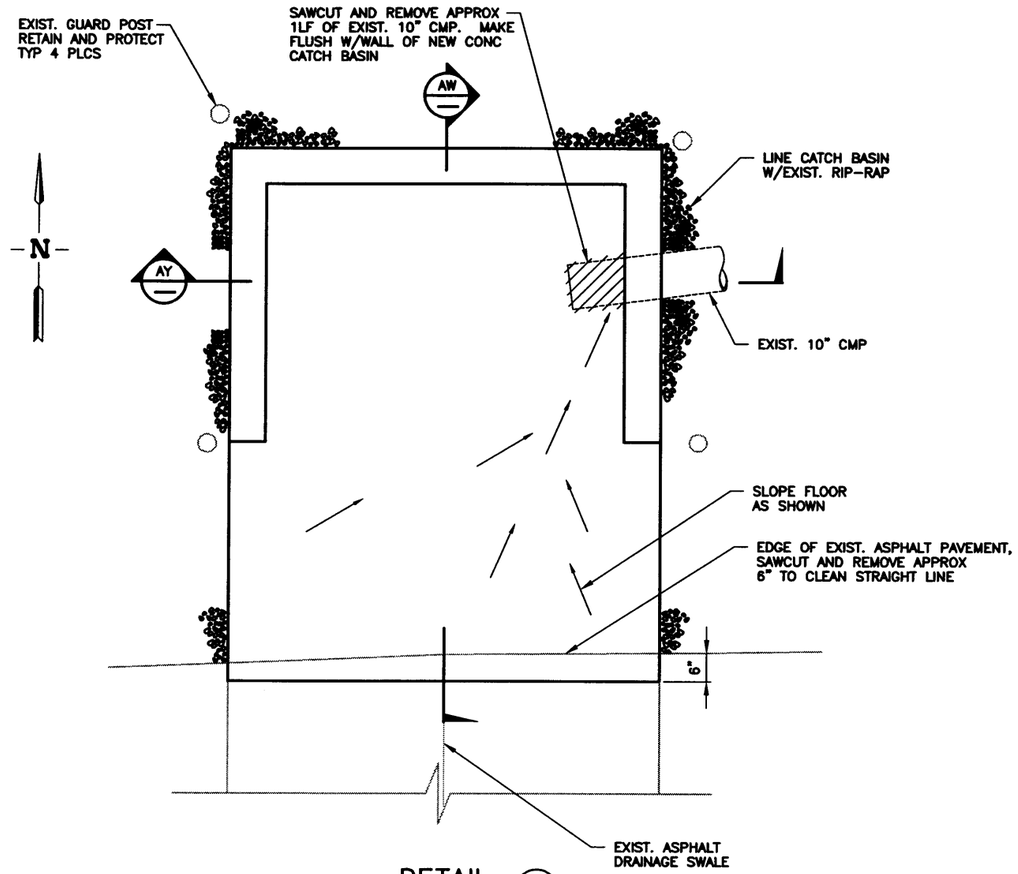

DETAIL 25 C-1
SCALE: 3/4"=1'-0"

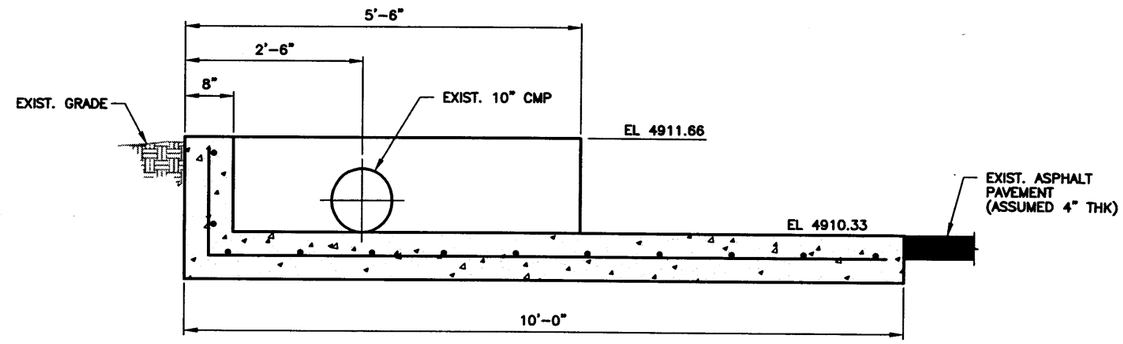

SECTION AW
SCALE: 1"=1'-0"

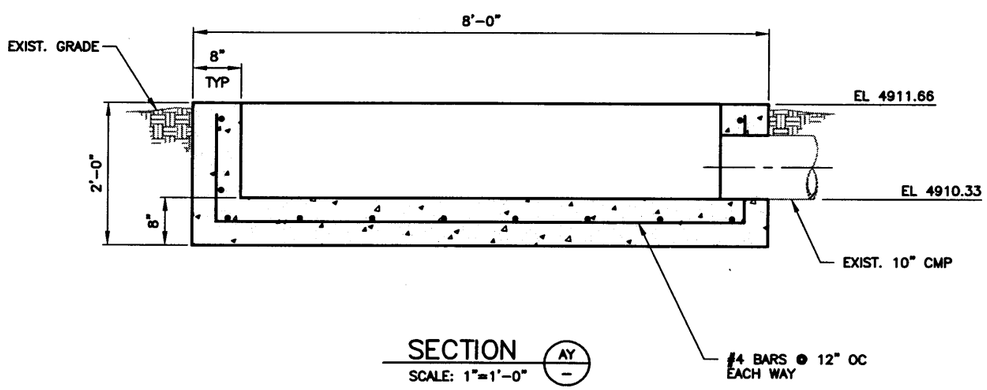

SECTION AY
SCALE: 1"=1'-0"

LEGEND

- REMOVE OR ABANDON IN PLACE

NOTES

1. PROVIDE 3/4" CHAMFER ON ALL EXPOSED CORNERS.

REVISION: 0
ORIGINAL SIGNED BY: KURT D. FRITZ
DATE ORIGINAL SIGNED: 9/18/2000
SEAL NUMBER: 9404
ORIGINAL STORED AT: EROB DOCUMENT CONTROL

PROFESSIONAL ENGINEER REGISTERED 9404 STATE OF IDAHO KURT D. FRITZ

FOR DRAWING INDEX SEE DRAWING NO. 515158	SUBCONTRACT NO. S00-588051	INEEL (Idaho National Engineering & Environmental Laboratory) BECHTEL BWXT IDAHO, LLC
SCALE: 3/4" = 1'-0" / SCALE: 1" = 1'-0"	REQUESTER: M.S. KAPTEIN	INEEL OU 3-13 GROUP 1 TANK FARM INTERIM ACTION PHASE 1 & 2 CATCH BASIN DETAIL AND SECTIONS
	DESIGN: KURT FRITZ	
	DRAWN: ROB HERGESHEIMER	
	PROJECT NO. 020978	
	SPEC CODE	
DESIGN PHASE: AFC	FOR REVIEW/APPROVAL SIGNATURES SEE DAR NO. 68366	SIZE D; CAGE CODE; INDEX CODE NUMBER: AREA 200, TYPE 0100, CL 62, ORIG 090; DWG-515200; REV
QUALITY LEVEL: 3	EFFECTIVE DATE: 9/18/2000	SCALE: NOTED; SHEET C-41

File: C-41.DWG ID: RDHS Layout Name: D Size
Path: G:\OU3-13-TANKFARM\9-6-00 Saved:09/18/00 - 5:17 P.M.

REVISIONS		
REV	DESCRIPTION	EFFECTIVE DATE:

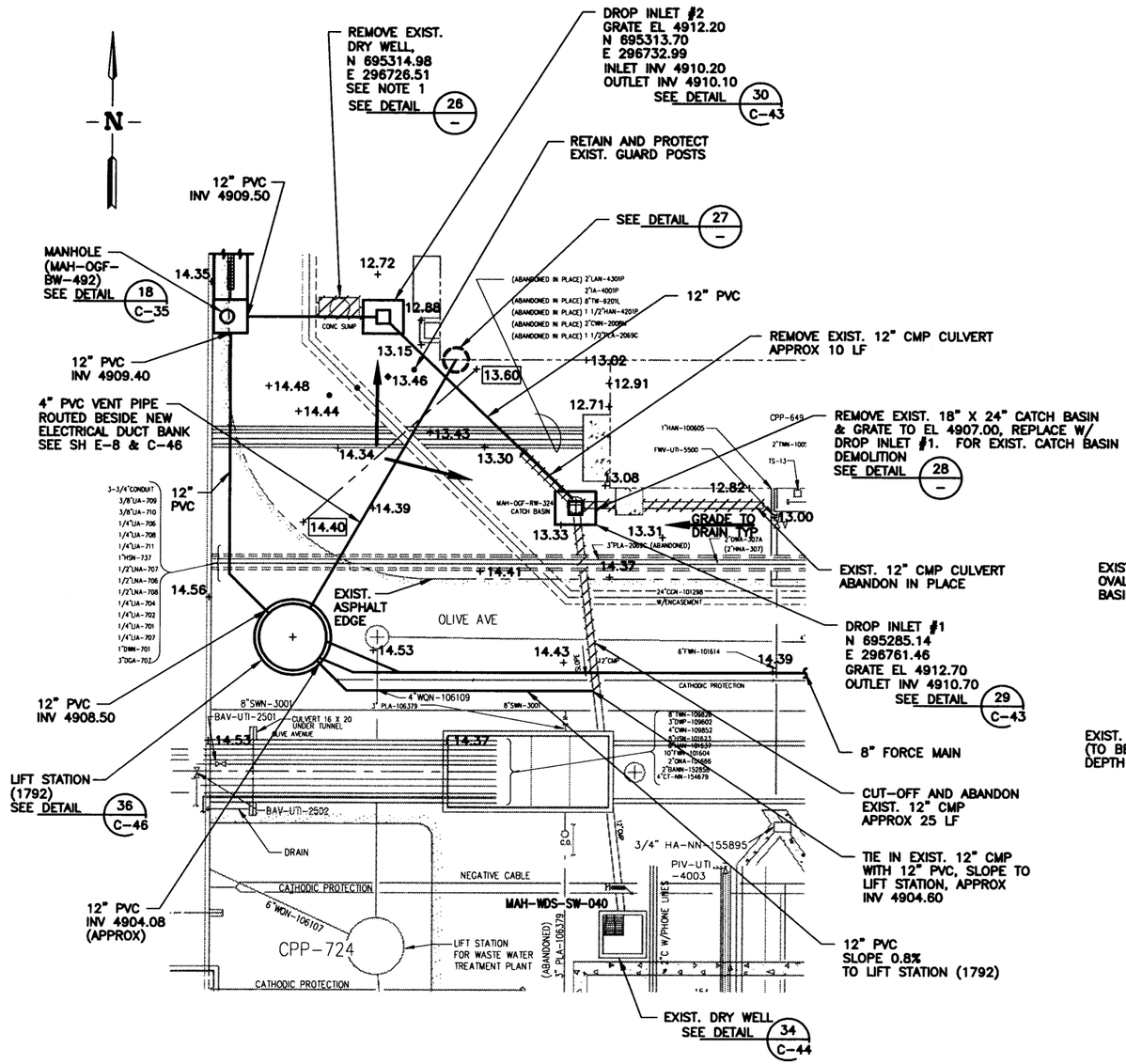

ENLARGED PLAN

SCALE: 1"=10.0' REF C-1 C-3

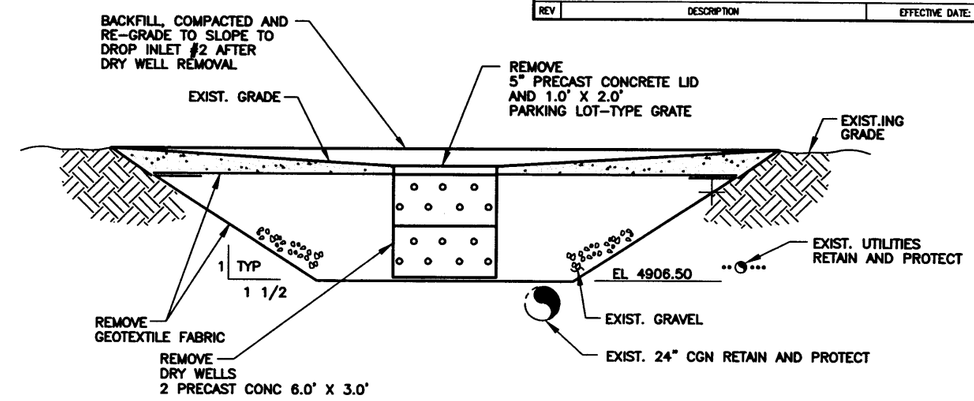

DETAIL 26 –

SEE NOTE 2
NTS

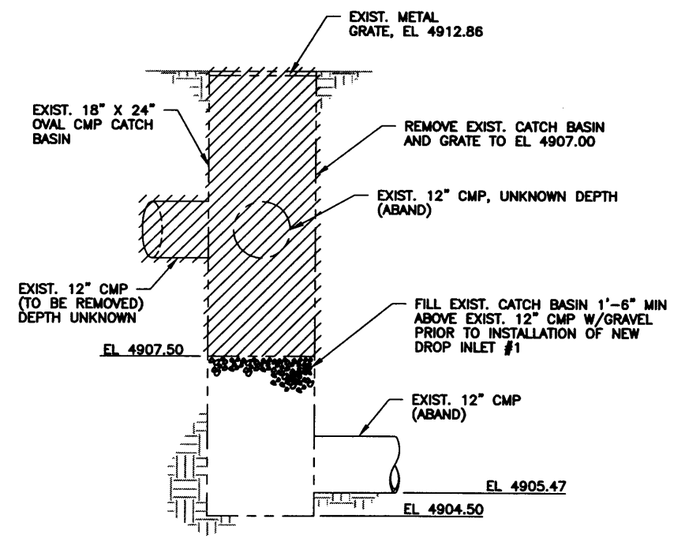

DETAIL 28 –

SCALE: 3/4"=1'-0"

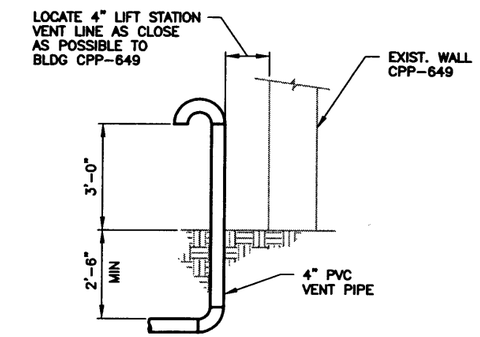

DETAIL 27 – REF C-46

SCALE: 1/2"=1'-0"

LEGEND

– REMOVE OR ABANDON IN PLACE

NOTES

1. RETAIN AND PROTECT ALL EXIST.ING FOOTINGS, SLABS AND OTHER STRUCTURES, INCLUDING EXIST.ING OVERHEAD 42" DIA DUCT WITH 12.0' CLEARANCE.
2. RETAIN AND PROTECT ALL UNDERGROUND UTILITIES.
3. ADD 4900 TO ALL ELEVATIONS POINTS SHOWN.

REVISION: 0
ORIGINAL SIGNED BY: KURT D. FRITZ
DATE ORIGINAL SIGNED: 9/18/2000
SEAL NUMBER: 9404
ORIGINAL STORED AT: EROB DOCUMENT CONTROL

PROFESSIONAL ENGINEER REGISTERED 9404 STATE OF IDAHO KURT D. FRITZ

FOR DRAWING INDEX SEE DRAWING NO. 515158	SUBCONTRACT NO. S00-588051
SCALE: 1" = 10.0' / SCALE: 3/4" = 1'-0"	REQUESTER: M.S. KAPTEIN
	DESIGN: KURT FRITZ
	DRAWN: ROB HERGESHEIMER
	PROJECT NO. 020978
	SPEC CODE
DESIGN PHASE: AFC	FOR REVIEW/APPROVAL SIGNATURES SEE DAR NO. 68366
QUALITY LEVEL: 3	EFFECTIVE DATE: 9/18/2000

INEEL Idaho National Engineering & Environmental Laboratory BECHTEL BWXT IDAHO, LLC

INEEL
OU 3-13 GROUP 1
TANK FARM INTERIM ACTION
PHASE 1 & 2
ENLARGED PLAN AND DETAILS

SIZE	CAGE CODE	INDEX CODE NUMBER AREA	TYPE	CL	DBG	DWG-515201	REV
D		200	0100	65	090		

SCALE: NOTED SHEET C-42

File: C-42.DWG ID: RDH5 Layout Name: D Size
Path: G:\003-13-TANKFARM\3-8-00 Date: 09/08/00 – 08:43 A.M.

REVISIONS		
REV	DESCRIPTION	EFFECTIVE DATE:

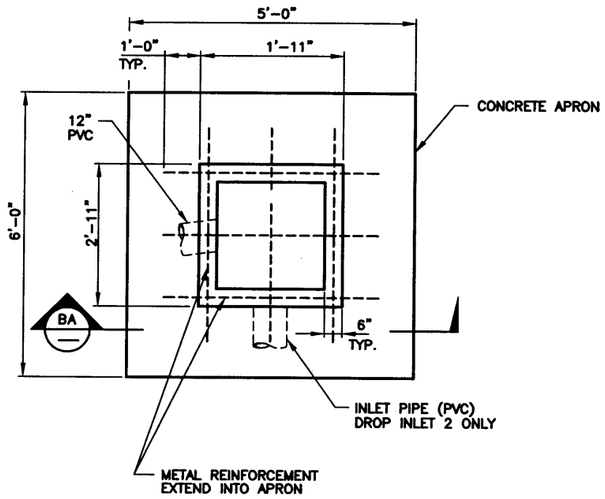

TYP DROP INLET DETAIL (29 C-42) (30 C-42)

NTS

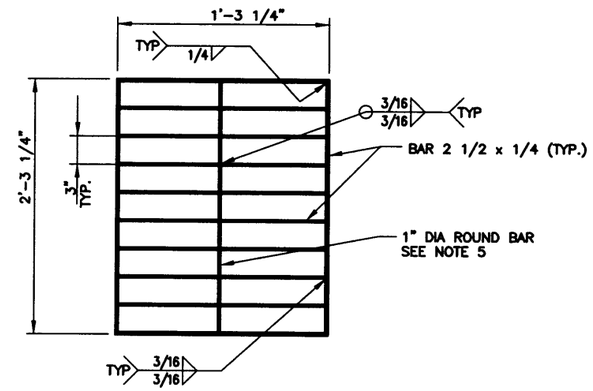

METAL GRATE

NTS

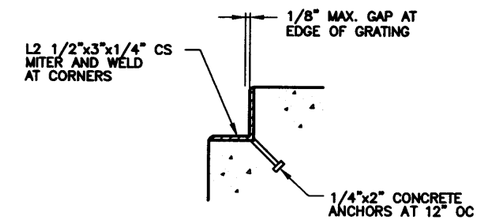

DETAIL (31)

NTS

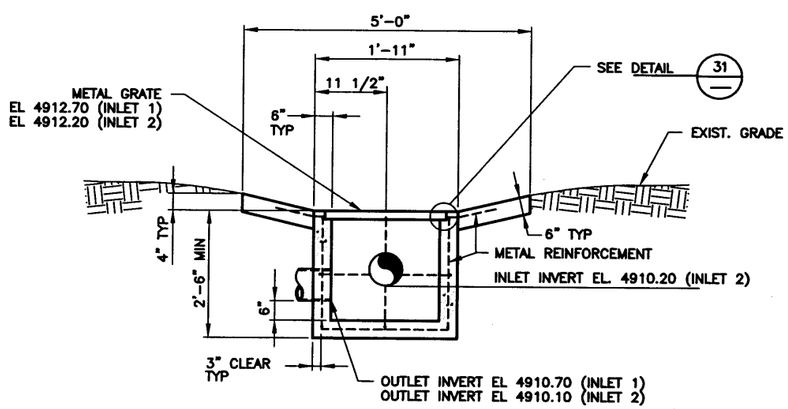

SECTION (BA)

NTS

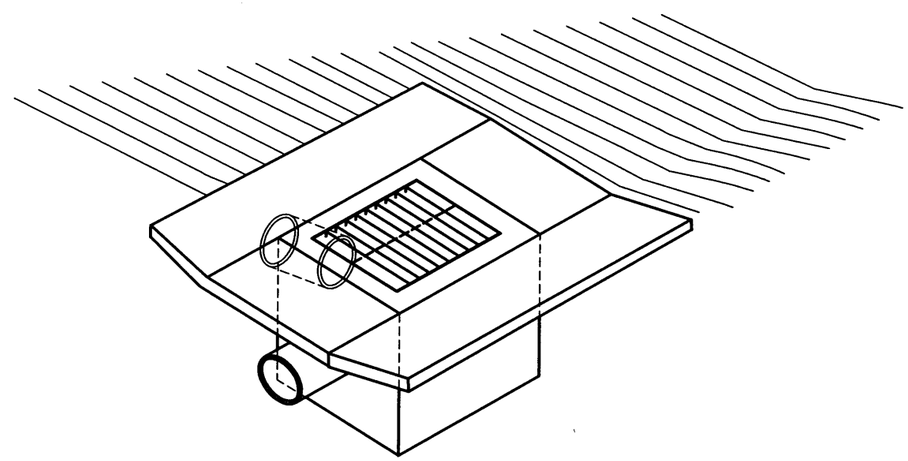

DROP INLET ISOMETRIC

NTS

NOTES

1. TOP OF CONCRETE APRON SHALL BE FLUSH WITH THE TOP OF THE ADJOINING SOIL.
2. ONE INCH SIDE DRAFT ALLOWED FOR FORM REMOVAL.
3. METAL REINFORCEMENT SHALL BE NO. 4 BARS.
4. METAL FOR GRATE SHALL BE ASTM A36 GALV STEEL.
5. 1"ø ROUND BARS SHALL BE INSERTED THROUGH 1 1/16" HOLES DRILLED OR PUNCHED THROUGH CENTERLINE OF FLAT BARS.
6. PRIOR APPROVAL OF SHOP DRAWINGS REQUIRED FOR USE OF PRECAST UNITS.
7. WELDING SHALL BE ELECTRIC ARC WELDING DONE IN ACCORDANCE WITH THE AMERICAN WELDING SOCIETY SPECIFICATIONS D1.1. ALL WELDING SHALL BE ACCOMPLISHED OFF SITE. VISUAL WELD INSPECTION WILL BE REQUIRED BY CONTRACTOR REPRESENTATIVE.

REVISION: 0
ORIGINAL SIGNED BY: KURT D. FRITZ
DATE ORIGINAL SIGNED: 9/18/2000
SEAL NUMBER: 9404
ORIGINAL STORED AT: EROB DOCUMENT CONTROL

PROFESSIONAL ENGINEER REGISTERED 9404 STATE OF IDAHO KURT D. FRITZ

FOR DRAWING INDEX SEE DRAWING NO. 515158	SUBCONTRACT NO. S00-588051	INEEL (Idaho National Engineering & Environmental Laboratory) BECHTEL BWXT IDAHO, LLC	
NO SCALE	REQUESTER: M.S. KAPTEIN	INEEL OU 3-13 GROUP 1 TANK FARM INTERIM ACTION PHASE 1 & 2 DRAIN INLET SECTION AND DETAILS	
	DESIGN: KURT FRITZ		
	DRAWN: ROB HERGESHEIMER		
	PROJECT NO. 020978		
	SPEC CODE		
DESIGN PHASE: AFC	FOR REVIEW/APPROVAL SIGNATURES SEE DAR NO. 68366	SIZE D / CAGE CODE / INDEX CODE NUMBER AREA 200 TYPE 0100 Q. 60 ORG. 090	DWG-515202 REV
QUALITY LEVEL: 3	EFFECTIVE DATE: 9/18/2000	SCALE: NONE	SHEET C-43

File: C-A3.DWG Path: G:\OU3-13-TANKFARM\9-8-00 ID: RDH5 Layout Name: D Size Date:09/08/00 - 08:45 A.M.

REVISIONS		
REV	DESCRIPTION	EFFECTIVE DATE:

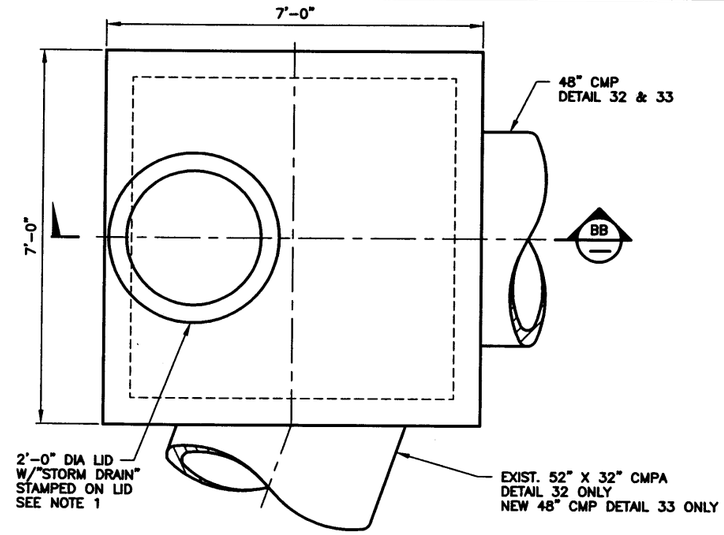

MAH-YDF-BW-491
DETAIL 32 C-9 REF C-18
SCALE: 3/4"=1'-0"

MAH-CW2-BW-490
DETAIL 32 C-9 REF C-18
SCALE: 3/4"=1'-0"

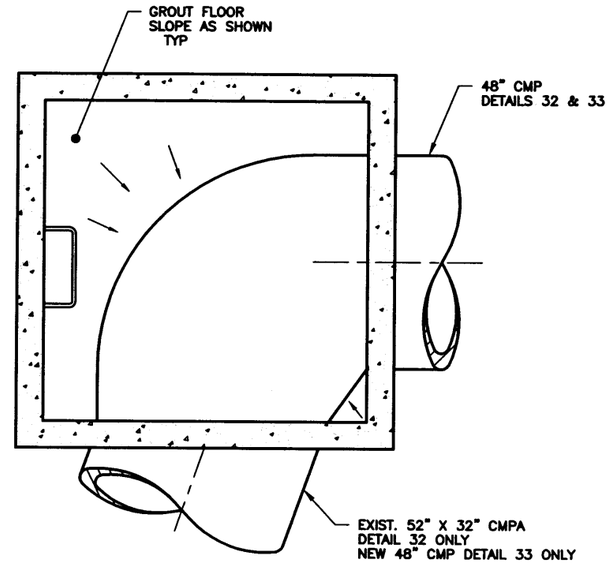

SECTION BC B
SCALE: 3/4"=1'-0"

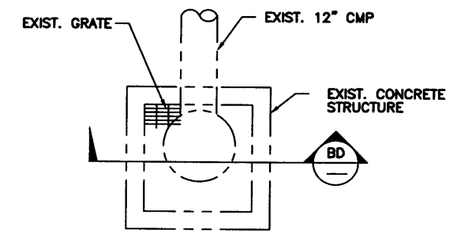

EXIST. DRY WELL DETAIL 34 C-42
NTS

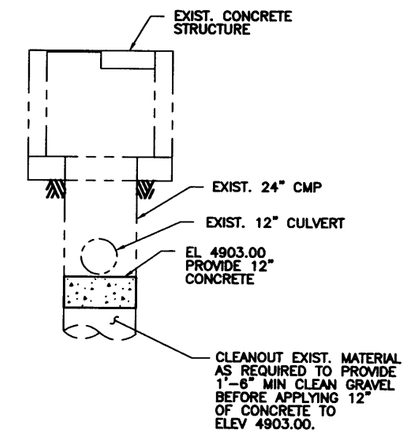

SECTION BD
NTS

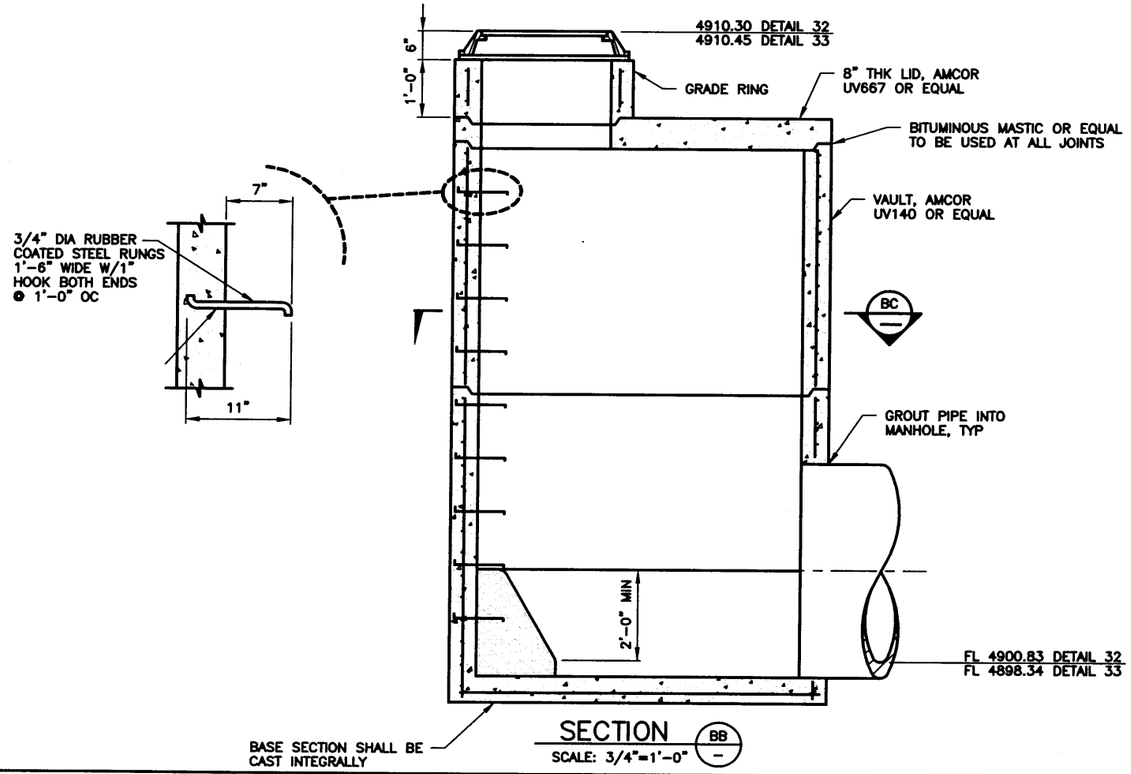

SECTION BB
SCALE: 3/4"=1'-0"

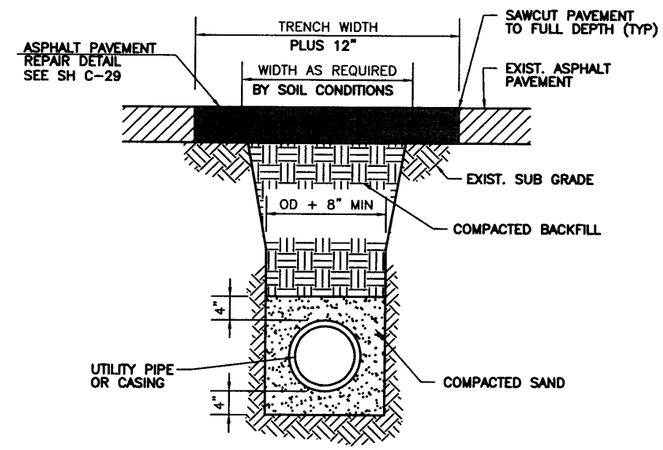

TYP PIPE BEDDING DETAIL
NTS

NOTES

1. MANHOLE LID AND COVER SHALL BE H-20 LOAD RATED.

REVISION: 0
ORIGINAL SIGNED BY: KURT D. FRITZ
DATE ORIGINAL SIGNED: 9/18/2000
SEAL NUMBER: 9404
ORIGINAL STORED AT: EROB DOCUMENT CONTROL

PROFESSIONAL ENGINEER REGISTERED 9404 STATE OF IDAHO KURT D. FRITZ

FOR DRAWING INDEX SEE DRAWING NO. 515158	SUBCONTRACT NO. S00-588051	INEEL
SCALE: 1" = 1'-0"	REQUESTER: M.S. KAPTEIN	INEEL OU 3-13 GROUP 1 TANK FARM INTERIM ACTION PHASE 1 & 2 MANHOLE AND MISC. DETAILS AND SECTIONS
	DESIGN: KURT FRITZ	
	DRAWN: ROB HERGESHEIMER	
	PROJECT NO. 020978	
	SPEC CODE	
DESIGN PHASE: AFC	FOR REVIEW/APPROVAL SIGNATURES SEE DAR NO. 68366	SIZE D · CAGE CODE · INDEX CODE NUMBER AREA 200 TYPE 0100 CL 62 ORG 090 · DWG-515203 · REV
QUALITY LEVEL: 3	EFFECTIVE DATE: 9/18/2000	SCALE: 1"=1'-0" · SHEET C-44

File: C-44.DWG ID: RDH5 Layout Name: D Size
Path: G:\OU3-13-TANKFARM\9-6-00 Dalsuit99\RB/00 - 08:53 A.M.

REVISIONS		
REV	DESCRIPTION	EFFECTIVE DATE:

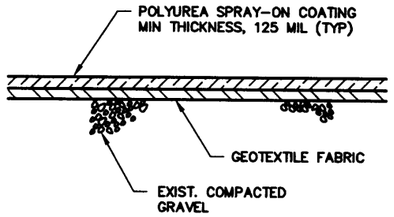

TYPICAL SPRAY COATING DETAIL

NTS
SEE NOTE 1

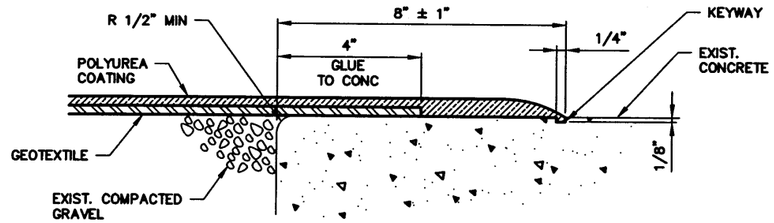

TYPICAL HORIZONTAL SPRAY ON COATING TO CONCRETE TERMINATION DETAIL

SEE NOTE 2
NTS

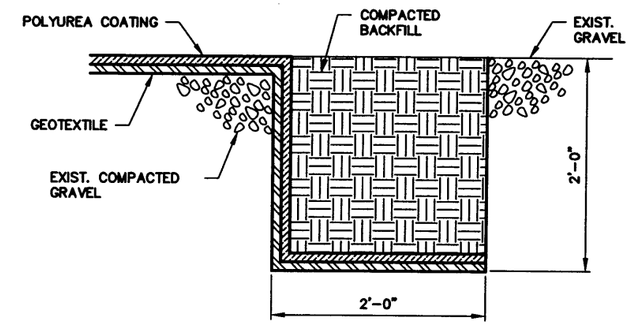

TYPICAL HORIZONTAL GRAVEL TERMINATION DETAIL

NTS

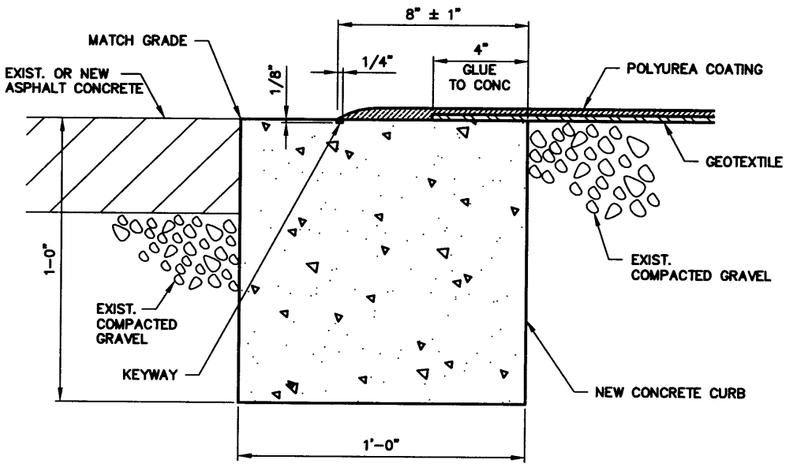

TYPICAL SPRAY ON COATING TO ASPHALT TERMINATION DETAIL

SEE NOTE 2
NTS

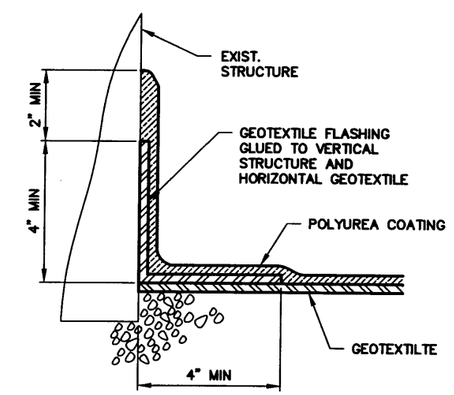

TYPICAL VERTICAL SPRAY ON COATING MULTI PURPOSE TERMINATION DETAIL

(METAL, WOOD AND CONCRETE)
SEE NOTE 3
NTS

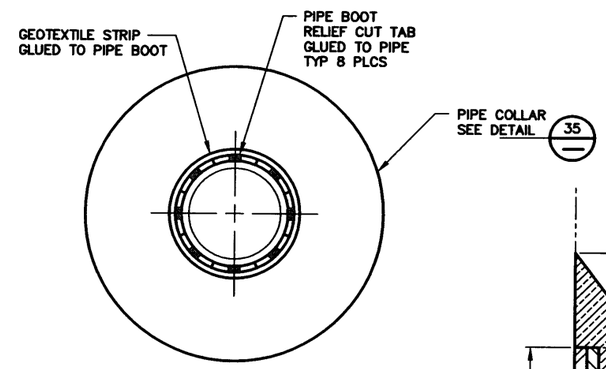

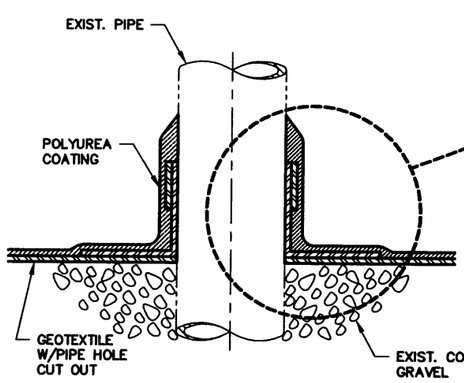

TYPICAL PIPE PENETRATION DETAIL

SEE NOTE 4
NTS

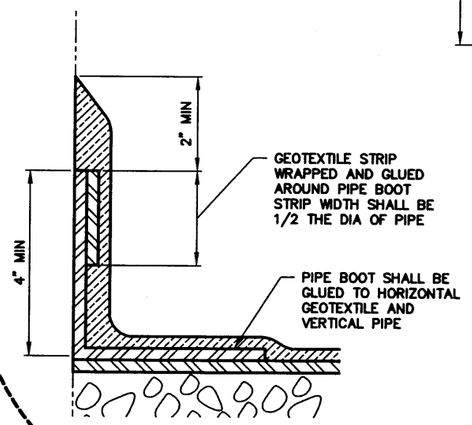

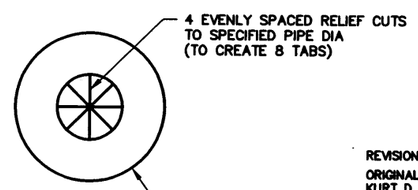

DETAIL 35
NTS

NOTES

1. COATING DETAILS ARE INTENDED TO SHOW A MINIMUM ACCEPTABLE LEVEL OF INSTALLATION, BUT ARE INTENDED TO SUPERSEDE ANY MANUFACTURER SPECIFIC INSTALLATION REQUIREMENTS.
2. CONCRETE SUBTRATE SHALL BE PREPARED AND PRIMED PER MANUFACTURES INSTRUCTIONS.
3. VERTICAL STRUCTURE SHALL BE PREPARED AND PRIMED PER MANUFACTURES INSTRUCTIONS
4. PIPE SHALL BE PREPARED AND PRIMED PER MANUFACTURES INSTRUCTIONS

REVISION: 0
ORIGINAL SIGNED BY: KURT D. FRITZ
DATE ORIGINAL SIGNED: 9/18/2000
SEAL NUMBER: 9404
ORIGINAL STORED AT: EROB DOCUMENT CONTROL

PROFESSIONAL ENGINEER REGISTERED 9404 STATE OF IDAHO KURT D. FRITZ

FOR DRAWING INDEX SEE DRAWING NO. 515158	SUBCONTRACT NO. S00-588051	INEEL (Idaho National Engineering & Environmental Laboratory) BECHTEL BWXT IDAHO, LLC
NO SCALE	REQUESTER: M.S. KAPTEIN DESIGN: JESTIN HURST DRAWN: ROB HERGESHEIMER PROJECT NO. 020978 SPEC CODE	INEEL OU 3-13 GROUP 1 TANK FARM INTERIM ACTTION PHASE 1 & 2 MISC. DETAILS
DESIGN PHASE: AFC	FOR REVIEW/APPROVAL SIGNATURES SEE DAR NO. 68366	SIZE D · CAGE CODE · INDEX CODE NUMBER (AREA 200, TYPE 0100, CL 60, ORG 090) · DWG- 515204 · REV
QUALITY LEVEL: 3	EFFECTIVE DATE: 9/18/2000	SCALE: NONE · SHEET C-45

File: C-45.dwg Path: G:\OU3-13-TANKFARM\B-a-AO
ID: RDH5 Layout Name: Layout1
Date:09/18/00 - 08:55 A.M.

REVISIONS		
REV	DESCRIPTION	EFFECTIVE DATE:

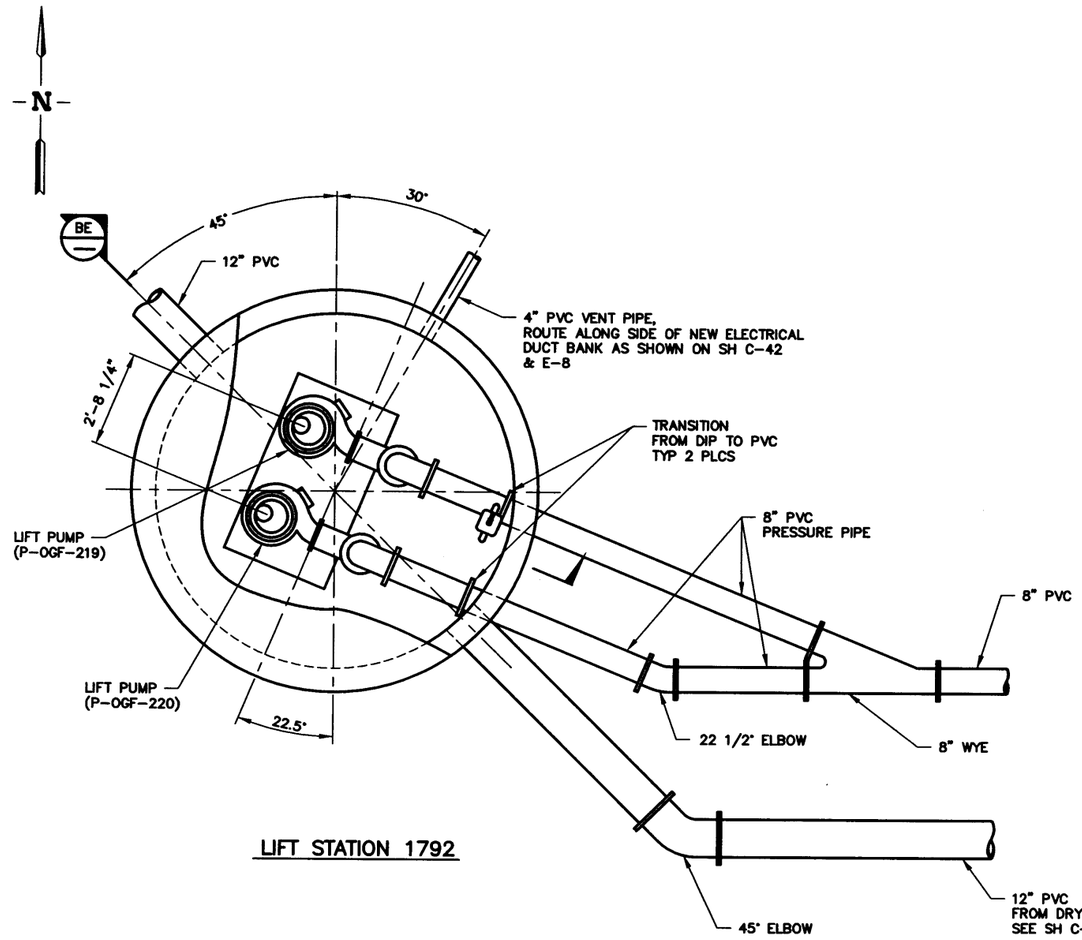

LIFT STATION 1792

DETAIL (36 / C-3)
SCALE: 1/2"=1'-0"

REF
C-4
C-11
C-12
C-42

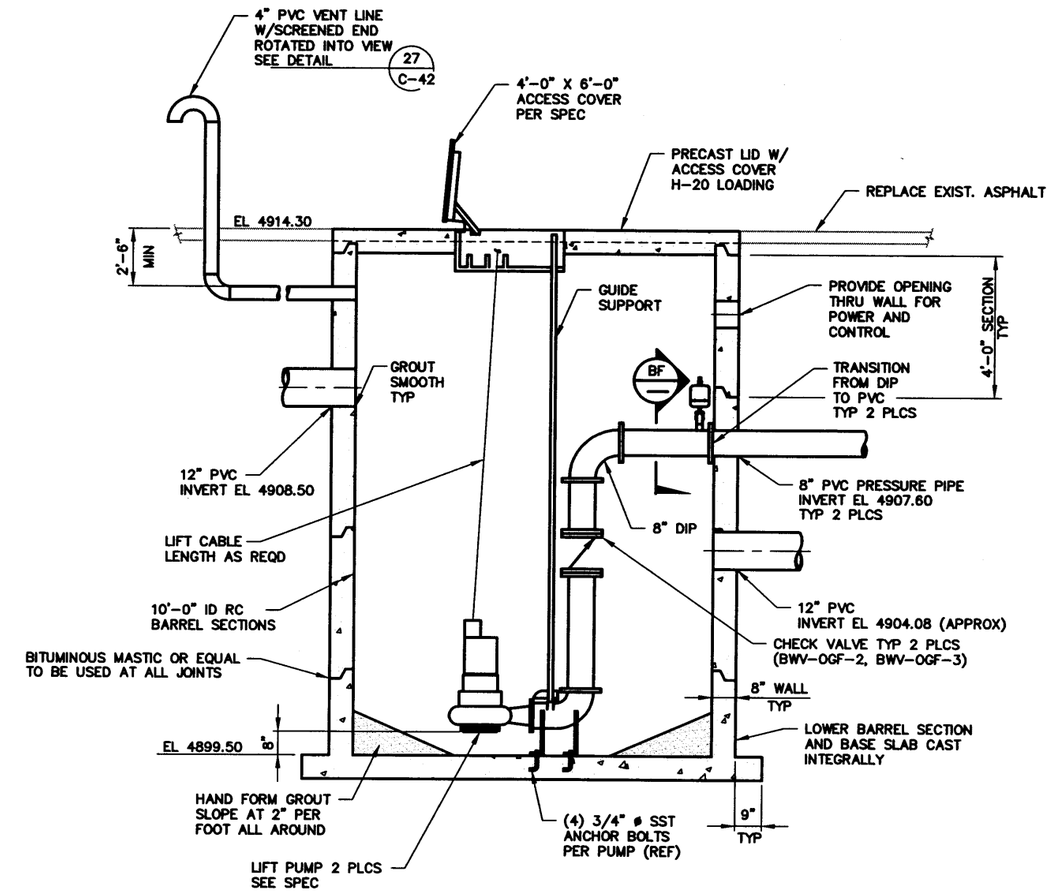

SECTION (BE / –)
SCALE: 1/2"=1'-0"

LIFT STATION 1792 CONTROL SETTINGS

HIGH LEVEL ALARM	EL 4909.00
PUMPS ON (BOTH)	EL 4908.00
FIRST PUMP ON	EL 4907.00
PUMPS OFF (BOTH)	EL 4901.00

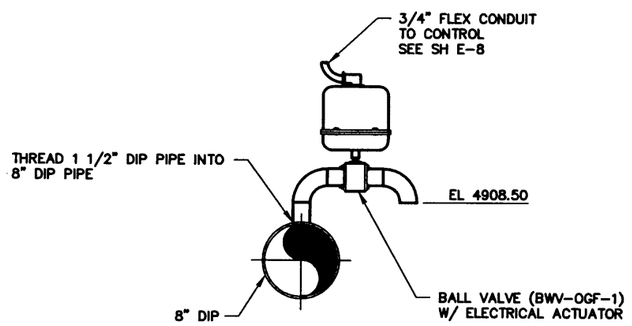

SECTION (BF / –)
SCALE: 1 1/2"=1'-0"

NOTES

1. PUMPS, GUIDE RAILS, ANCHOR BOLTS AND ACCESS COVER SHALL BE LOCATED WITH RESPECT TO EACH OTHER AS PER MANUFACTURER'S INSTALLATION INSTRUCTIONS AND DRAWINGS.

REVISION: 0
ORIGINAL SIGNED BY: KURT D. FRITZ
DATE ORIGINAL SIGNED: 9/18/2000
SEAL NUMBER: 9404
ORIGINAL STORED AT: EROB DOCUMENT CONTROL

PROFESSIONAL ENGINEER REGISTERED 9404 STATE OF IDAHO KURT D. FRITZ

FOR DRAWING INDEX SEE DRAWING NO. 515158	SUBCONTRACT NO. S00-588051	INEEL	
SCALE: 1/2" = 1'-0" / SCALE: 1 1/2" = 1'-0"	REQUESTER: M.S. KAPTEIN	INEEL OU 3-13 GROUP 1 TANK FARM INTERIM ACTION PHASE 1 & 2 LIFT STATION SECTIONS AND DETAIL	
	DESIGN: KURT FRITZ		
	DRAWN: ROB HERGESHEIMER		
	PROJECT NO. 020978		
	SPEC CODE		
DESIGN PHASE: AFC	FOR REVIEW/APPROVAL SIGNATURES SEE DAR NO. 68366	SIZE D / CAGE CODE / INDEX CODE NUMBER AREA 200, TYPE 1792, GL 60, DBG 090	DWG-515205 REV
QUALITY LEVEL: 3	EFFECTIVE DATE: 9/18/2000	SCALE: NOTED	SHEET C-46

File: C-46.DWG ID: RDH5 Layout Name: Layout1
Path: G:\OU3-13-TANKFARM\9-6-00 Bullsuu\dgn\00 - 08:57 A.M.

REVISIONS		
REV	DESCRIPTION	EFFECTIVE DATE:

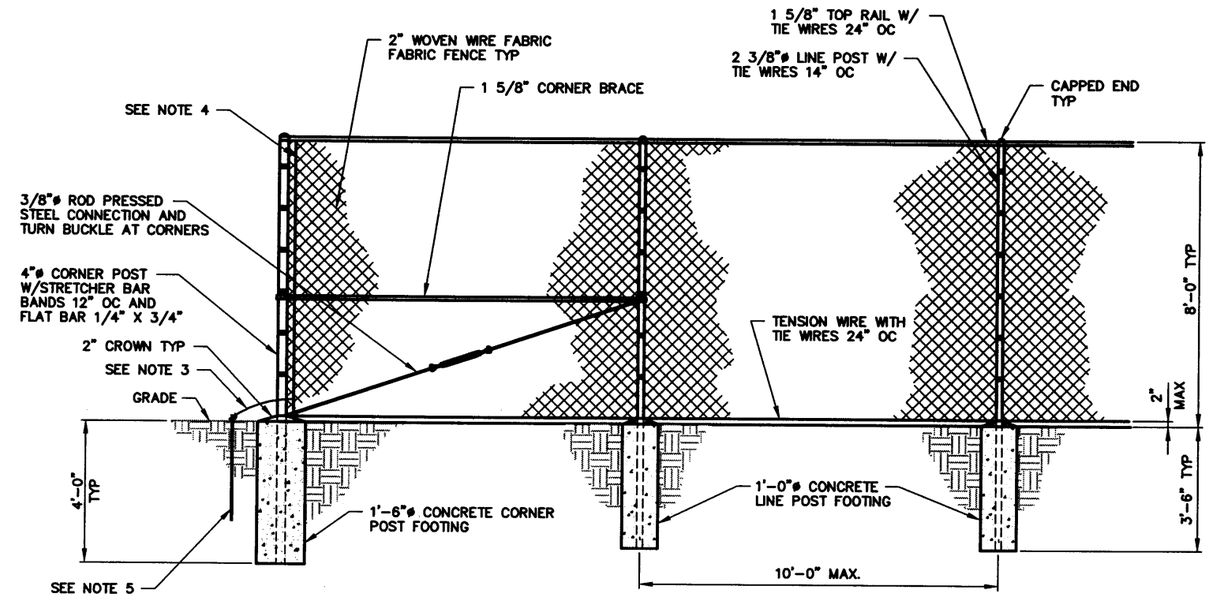

TYPICAL FENCE DETAIL

SCALE: 1/2"=1'-0"

REF
C-3
C-8
C-19

NOTES

1. ALL FOOTINGS SHALL BE CLASS 30 CONCRETE 3000 PSI AT 28 DAYS. FOOTINGS SHALL BE CYLINDRICAL OF THE DIAMETER INDICATED.
2. ALL POSTS, RAILS AND FITTINGS SHALL BE GALVANIZED BY HOT DIP PROCESS, AND COATED WITH ZINC PHOSPHATE, AN EPOXY BASE, AND A POLYESTER NO-MAR FINISH.
3. NO. 2/0 BARE COPPER JUMPER.
4. NO. 6 BARE COPPER RISER INTERWOVEN IN FABRIC, LOCATE AT POSTS PER GROUNDING NOTE 6.
5. 5/8" X 10.0' COPPER CLAD GROUND ROD INSTALLED AT CORNER POSTS AND AT 30.0' OR EVERY THIRD POST INTERVALS ALONG FENCE. AS REQUIRED, ASPHALT PAVING SHALL BE BROKEN OUT TO ALLOW INSTALLATION OF GROUND RODS AND BE PATCHED AFTER INSTALLATION IS COMPLETE.
6. FENCE TO BE GROUNDED AT EVERY THIRD POST AND THE CORNER POST. ABOVE GROUND CONNECTIONS TO BE MADE WITH CONNECTORS OR STRAPS. UNDERGROUND CONNECTIONS TO BE BRAZED, FUSION WELDED (CADWELDED) OR CONNECTED WITH BURNDY CLAMPS.
7. FILL CORNER POSTS AND GATE POSTS WITH CONCRETE PRIOR TO CAPPING.

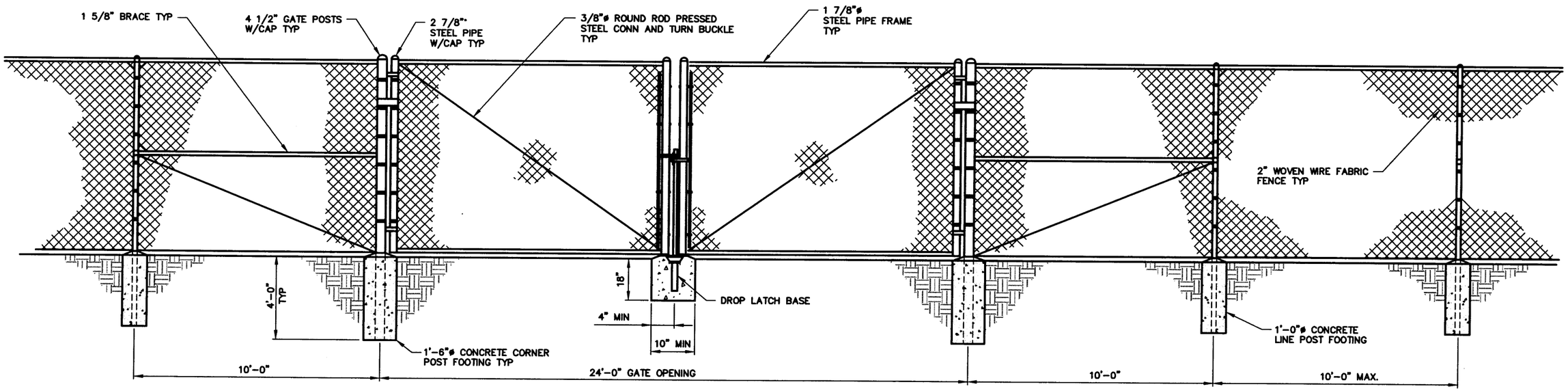

TYPICAL DOUBLE GATE DETAIL

SCALE: 1/2"=1'-0"

REF
C-19

REVISION: 0
ORIGINAL SIGNED BY: KURT D. FRITZ
DATE ORIGINAL SIGNED: 9/18/2000
SEAL NUMBER: 9404
ORIGINAL STORED AT: EROB DOCUMENT CONTROL

PROFESSIONAL ENGINEER REGISTERED 9404 STATE OF IDAHO KURT D. FRITZ

FOR DRAWING INDEX SEE DRAWING NO. 515158	SUBCONTRACT NO. S00-588051	INEEL
SCALE: 1/2" = 1'-0"	REQUESTER: M.S. KAPTEIN	INEEL OU 3-13 GROUP 1 TANK FARM INTERIM ACTION PHASE 1 & 2 FENCING DETAILS
	DESIGN: KURT FRITZ	
	DRAWN: ROB HERGESHEIMER	
	PROJECT NO. 020978	
	SPEC CODE	
DESIGN PHASE: AFC	FOR REVIEW/APPROVAL SIGNATURES SEE DAR NO. 68366	SIZE D · CAGE CODE · INDEX CODE NUMBER AREA 200 TYPE 0100 CL 60 ORIG 090 · DWG-515206 · REV
QUALITY LEVEL: 3	EFFECTIVE DATE: 9/18/2000	SCALE: 1/2"=1'-0" · SHEET C-47

REVISIONS		
REV	DESCRIPTION	EFFECTIVE DATE:

MCC-OGF-1049 WEST

480/277V, 3ø, 4W, 600A, 65KAIC

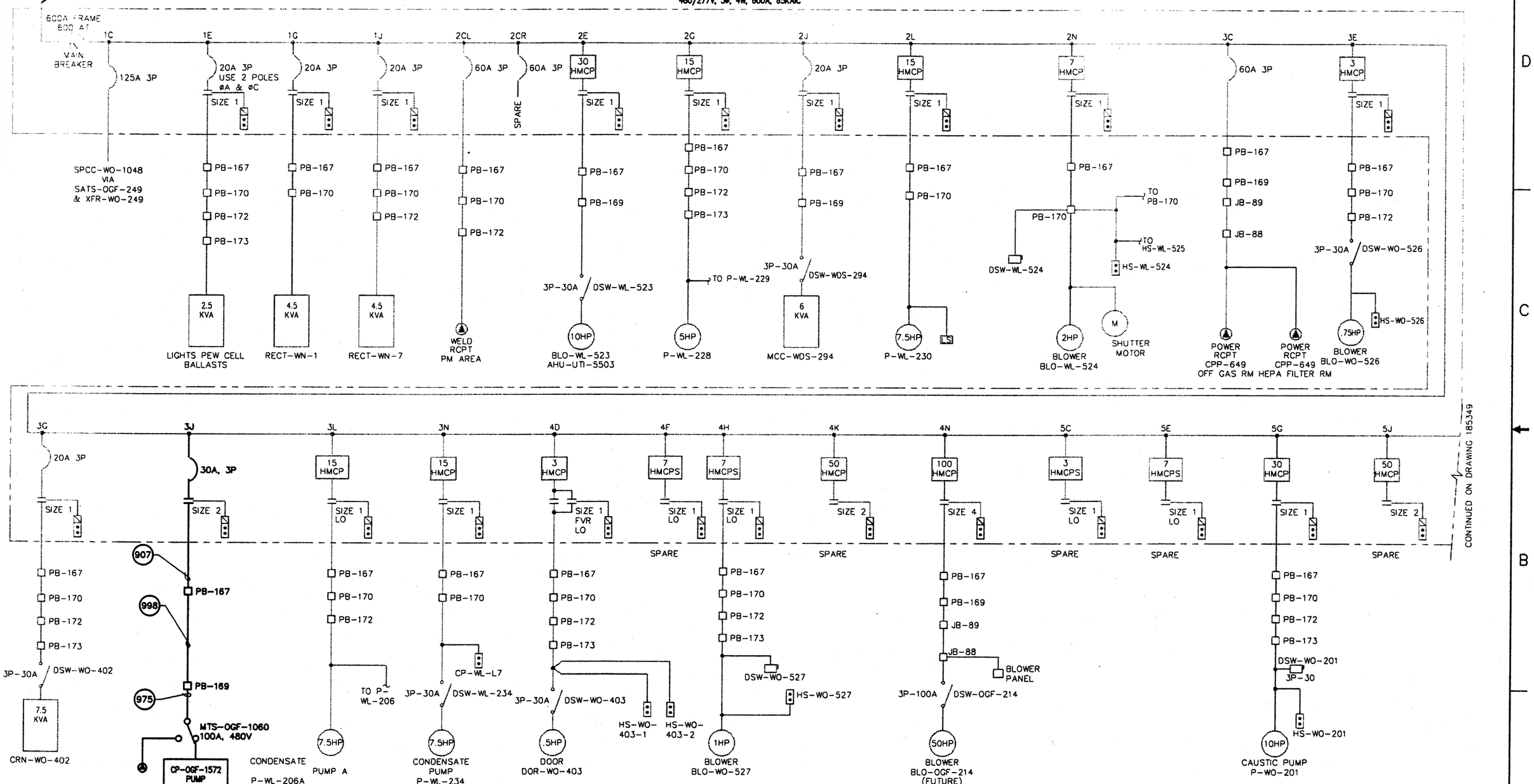

NOTES

1. FOR CONDUIT AND CABLE SCHEDULE SEE SHEET E-9.
2. FOR EQUIPMENT LOCATIONS SEE SHEETS E-2 THROUGH E-4.

REVISION: 0
ORIGINAL SIGNED BY: LARRY HILL
DATE ORIGINAL SIGNED: 9/18/2000
SEAL NUMBER: 9502
ORIGINAL STORED AT: EROB DOCUMENT CONTROL

PROFESSIONAL ENGINEER REGISTERED 9502 STATE OF IDAHO LARRY J. HILL

FOR DRAWING INDEX SEE DRAWING NO. 515158	SUBCONTRACT NO. SOO-588051	INEEL
NO SCALE	REQUESTER: M.S. KAPTEIN DESIGN: LARRY HILL DRAWN: M WINTERS PROJECT NO. 020978 SPEC CODE	INEEL OU 3-13 GROUP 1 TANK FARM INTERIM ACTION PHASE 1 & 2 MCC-OGF-1049 ONE LINE DIAGRAM
DESIGN PHASE: AFC	FOR REVIEW/APPROVAL SIGNATURES SEE DAR NO. 68366	SIZE D · CAGE CODE · INDEX CODE NUMBER: AREA 200, TYPE 1773, CL 10, ORIG 090 · DWG-515207 · REV
QUALITY LEVEL: 3	EFFECTIVE DATE: 9/18/2000	SCALE: NONE · SHEET E-1

MADE FROM 185348

File: 515207.dwg ID: MLW5 Drawn in Model Space
Path: N:\rdh5\OU3-13-TANKFARM\...

REVISIONS		
REV	DESCRIPTION	EFFECTIVE DATE:

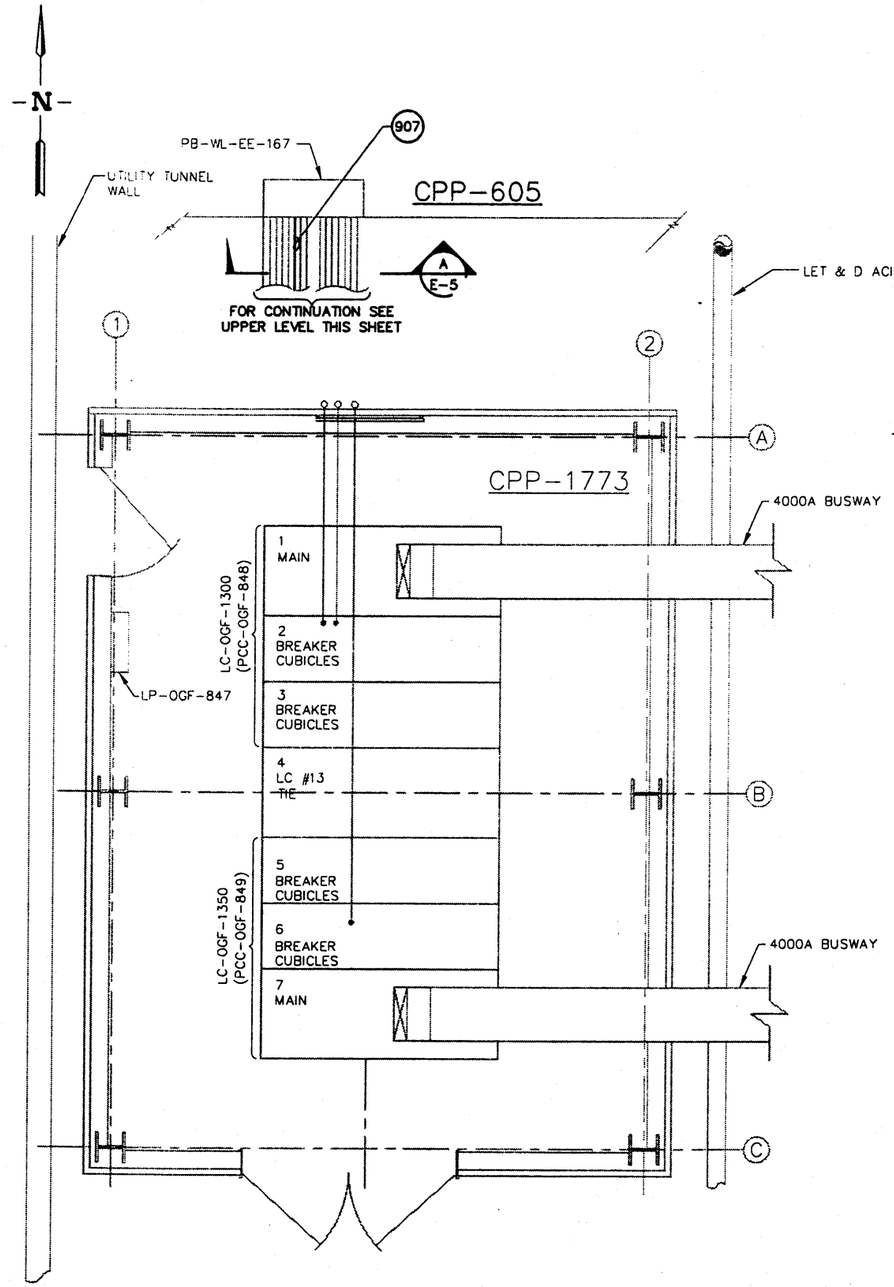

CPP-1773 LOWER LEVEL POWER PLAN

SCALE: 1/2" = 1'-0" EL 4914'-0"

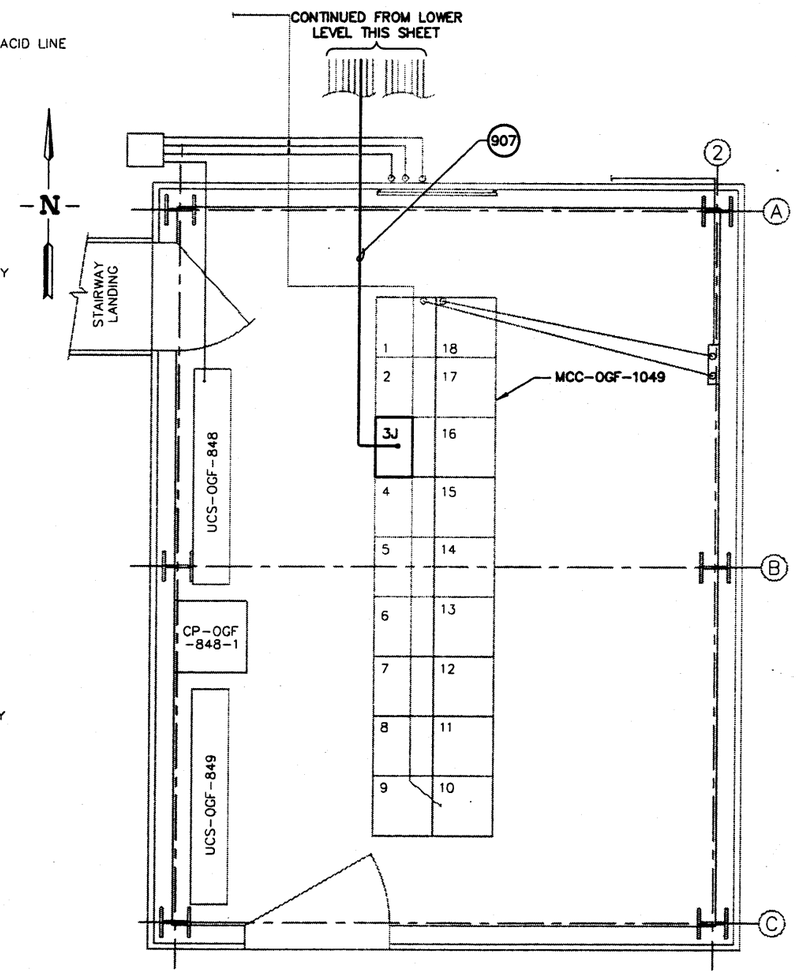

CPP-1773 UPPER LEVEL POWER PLAN

SCALE: 1/2" = 1'-0" EL 4926'-10"

NOTES

1. FOR CONDUIT & WIRE SCHEDULE SEE DRAWING E-9.

REVISION: 0
ORIGINAL SIGNED BY: LARRY HILL
DATE ORIGINAL SIGNED: 9/18/2000
SEAL NUMBER: 9502
ORIGINAL STORED AT: EROB DOCUMENT CONTROL

PROFESSIONAL ENGINEER REGISTERED 9502 STATE OF IDAHO LARRY J. HILL

INDEX CODE NUMBER			
AREA	TYPE	CL	ORIG
200	0605	10	090

FOR DRAWING INDEX SEE DRAWING NO.	515158
SCALE: 1/2" = 1'-0"	
DESIGN PHASE:	AFC
QUALITY LEVEL:	3
SUBCONTRACT NO.	SOO-588051
REQUESTER:	M.S. KAPTEIN
DESIGN:	LARRY HILL
DRAWN:	M WINTERS
PROJECT NO.	020978
SPEC CODE	
FOR REVIEW/APPROVAL SIGNATURES SEE DAR NO. 68366	
EFFECTIVE DATE:	9/18/2000

INEEL

INEEL
OU 3-13 GROUP 1
TANK FARM INTERIM ACTION
PHASE 1 & 2
CPP-1773 FLOOR PLAN

SIZE	CAGE CODE	INDEX CODE NUMBER				DWG-	REV
		AREA	TYPE	Q	ORIG		
D		200	1773	10	090	515208	

SCALE: 1/2" = 1'-0" SHEET E-2

MADE FROM 185364

File: 515208.dwg Path: N:\rdh5\OU3-13-TANKFARM\ ID: MLW5 Drawn in Model Space Date: 09/06/00 10:16 A.M.

REVISIONS		
REV	DESCRIPTION	EFFECTIVE DATE:

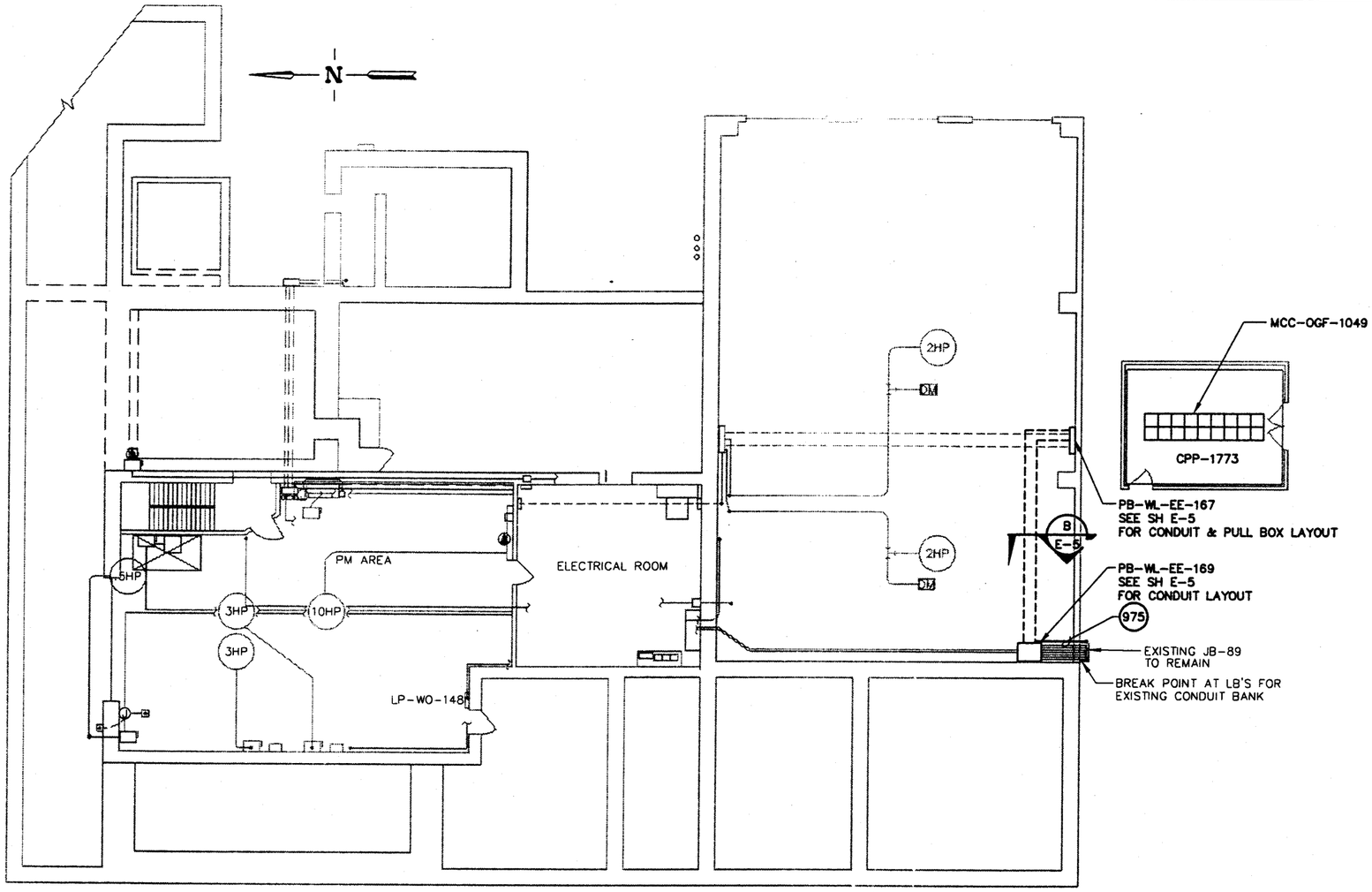

CPP-604 ELECTRICAL INSTALLATION PLAN

SCALE: 1/8" = 1'-0" (WO AREA) ELEV (+)10'-0"

NOTES

1. FOR INSTALLATION CONDUIT AND WIRE SCHEDULES SEE SH E-9.
2. SUBCONTRACTOR TO DETERMINE ACTUAL INTERFACE POINT FOR CONDUIT TO BE CONNECTED TO MCC-OGF-1049.

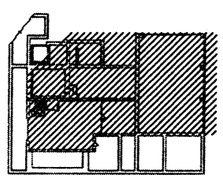

KEY PLAN

SCALE: NTS

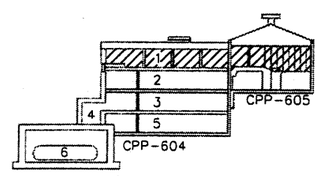

KEY ELEVATION

SCALE: NTS

REVISION: 0
ORIGINAL SIGNED BY: LARRY HILL
DATE ORIGINAL SIGNED: 9/18/2000
SEAL NUMBER: 9502
ORIGINAL STORED AT: EROB DOCUMENT CONTROL

PROFESSIONAL ENGINEER REGISTERED 9502 STATE OF IDAHO LARRY J. HILL

INDEX CODE NUMBER			
AREA	TYPE	CL	ORIG
200	1773	10	090

FOR DRAWING INDEX SEE DRAWING NO. 515158

SCALE: 1/8" = 1'-0"

DESIGN PHASE: AFC
QUALITY LEVEL: 3

SUBCONTRACT NO. SOO-588051
REQUESTER: M.S. KAPTEIN
DESIGN: LARRY HILL
DRAWN: M WINTERS
PROJECT NO. 020978
SPEC CODE
FOR REVIEW/APPROVAL SIGNATURES SEE DAR NO. 68366
EFFECTIVE DATE: 9/18/2000

INEEL
INEEL
OU 3-13 GROUP 1
TANK FARM INTERIM ACTION
PHASE 1 & 2
CPP-604 FLOOR PLAN

SIZE	CAGE CODE	INDEX CODE NUMBER AREA	TYPE	CL	ORIG	DWG-515209	REV
D		200	0604	10	090		

SCALE: 1/8" = 1'-0"
SHEET E-3

MADE FROM 185366

File: 515209.DWG ID: MLW5 Drawn in Model Space
Path: N:\rdh5\OU3-13-TANKFARM\5-EDAR 09/18/00 10:20 A.M.

REVISIONS		
REV	DESCRIPTION	EFFECTIVE DATE:

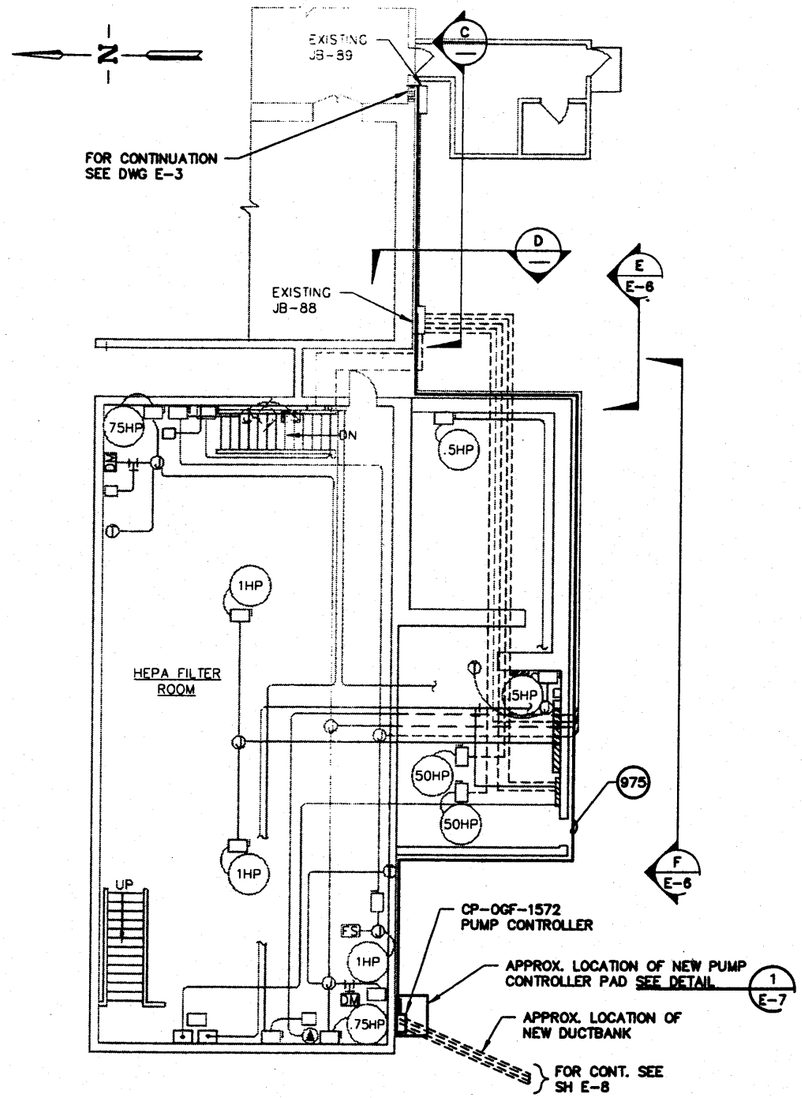

CPP-649 ELECTRICAL INSTALLATION PLAN

SCALE: 1/8" = 1'-0"

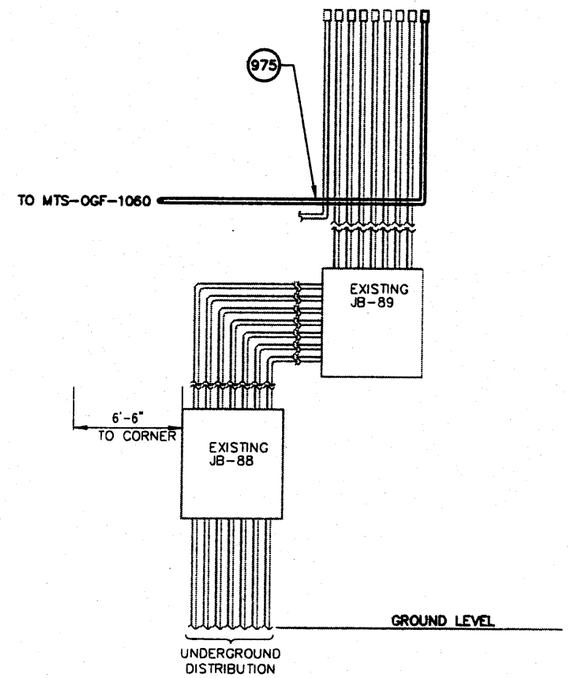

SECTION C

SCALE: 1/2" = 1'-0"

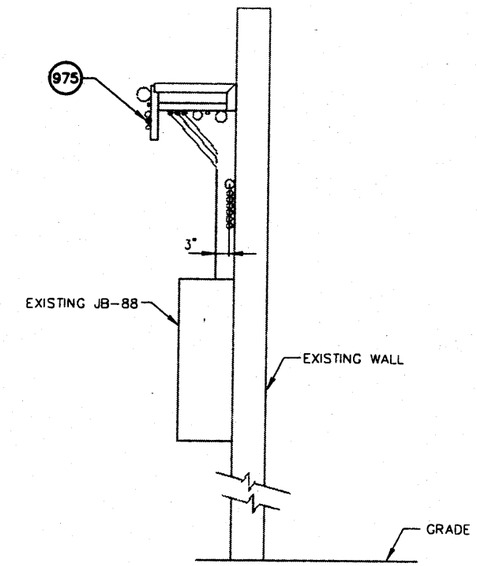

SECTION D

SCALE: 3/4" = 1'-0"

NOTES

1. FOR CONDUIT AND CABLE SCHEDULE SEE DRAWING E-9.

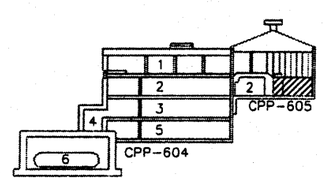

KEY ELEVATION

SCALE: NTS

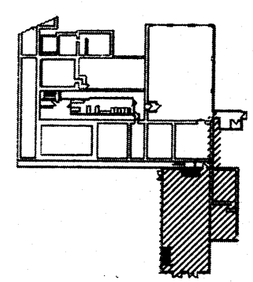

KEY PLAN

SCALE: NTS

REVISION: 0
ORIGINAL SIGNED BY: LARRY HILL
DATE ORIGINAL SIGNED: 9/18/2000
SEAL NUMBER: 9502
ORIGINAL STORED AT: EROB DOCUMENT CONTROL

PROFESSIONAL ENGINEER REGISTERED 9502 STATE OF IDAHO LARRY J. HILL

SCALE: 3/4" = 1'-0"

FOR DRAWING INDEX SEE DRAWING NO. 515158	SUBCONTRACT NO. SOO-588051	INEEL
SCALE: 1/8" = 1'-0"	REQUESTER: M.S. KAPTEIN	INEEL OU 3-13 GROUP 1 TANK FARM INTERIM ACTION PHASE 1 & 2 CPP-649 PLAN AND SECTIONS
SCALE: 1/2" = 1'-0"	DESIGN: LARRY HILL	
	DRAWN: M WINTERS	
	PROJECT NO. 020978	
	SPEC CODE	
DESIGN PHASE: AFC	FOR REVIEW/APPROVAL SIGNATURES SEE DAR NO. 68366	SIZE D · CAGE CODE · AREA 200 · TYPE 0649 · CL 10 · DWG 090 · DWG-515210 · REV
QUALITY LEVEL: 3	EFFECTIVE DATE: 9/18/2000	SCALE: NOTED · SHEET E-4

MADE FROM 185369

File: 515210.DWG ID: MLW5 Drawn in Model Space
Path: N:\rdh5\OU3-13-TANKFARM\E-Dwgs\dwg\0070- 10:21 A.M.

REVISIONS		
REV	DESCRIPTION	EFFECTIVE DATE:

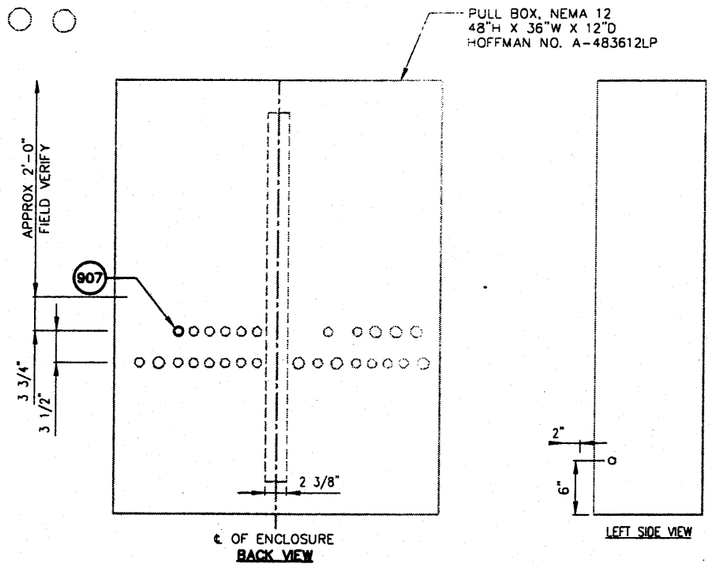

EXISTING PULL BOX PB-WL-EE-167
CONDUIT LAYOUT

SECTION A/E-2
SCALE: 1 1/2" = 1'-0"

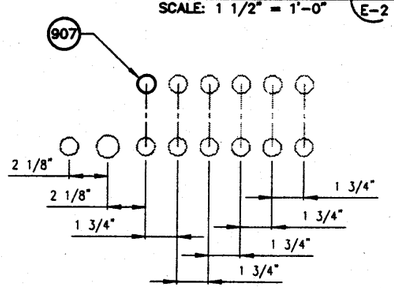

PB-WL-EE-167 LEFT HALF CONDUIT LAYOUT
SCALE: 3" = 1'-0"

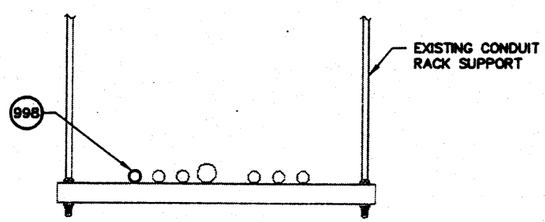

SECTION B/E-3
SCALE: NTS

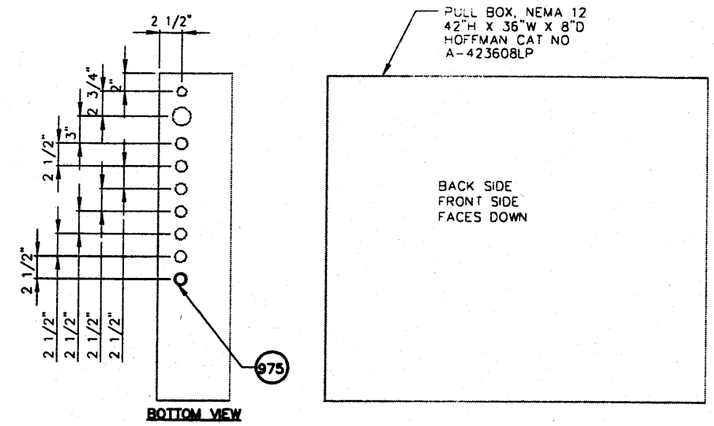

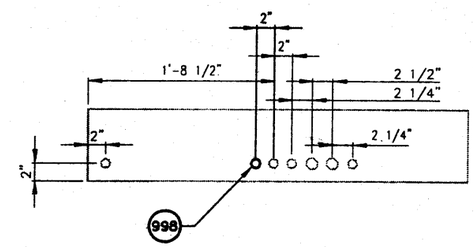

LEFT SIDE VIEW

EXISTING PULL BOX PB-WL-EE-169
CONDUIT LAYOUT
SCALE: 1 1/2" = 1'-0"

NOTES

1. FOR CONDUIT AND CABLE SCHEDULE SEE SHEET E-9.

REVISION: 0
ORIGINAL SIGNED BY: LARRY HILL
DATE ORIGINAL SIGNED: 9/18/2000
SEAL NUMBER: 9502
ORIGINAL STORED AT: EROB DOCUMENT CONTROL

PROFESSIONAL ENGINEER REGISTERED 9502 STATE OF IDAHO LARRY J. HILL

INDEX CODE NUMBER			
AREA	TYPE	CL	ORIG
200	0604	10	090

FOR DRAWING INDEX SEE DRAWING NO. 515158
SCALE: 1 1/2" = 1'-0"
SCALE: 3" = 1'-0"
DESIGN PHASE: AFC
QUALITY LEVEL: 3

SUBCONTRACT NO. SOO-588051
REQUESTER: M.S. KAPTEIN
DESIGN: LARRY HILL
DRAWN: M WINTERS
PROJECT NO. 020978
SPEC CODE
FOR REVIEW/APPROVAL SIGNATURES SEE DAR NO. 68366
EFFECTIVE DATE: 9/18/2000

INEEL
INEEL
OU 3-13 GROUP 1
TANK FARM INTERIM ACTION
PHASE 1 & 2
PB-WL-EE-167 & 169 LAYOUT AND SECTIONS

SIZE	CAGE CODE	INDEX CODE NUMBER AREA	TYPE	CL	ORIG	DWG-515211	REV
D		200	1773	10	090		

SCALE: NOTED
SHEET E-5

MADE FROM 185372 & 185374

File: 515211.DWG ID: MLW5 Drawn in Model Space
Path: N:\rdh5\OU3-13-TANKFARM\...

REVISIONS		
REV	DESCRIPTION	EFFECTIVE DATE:

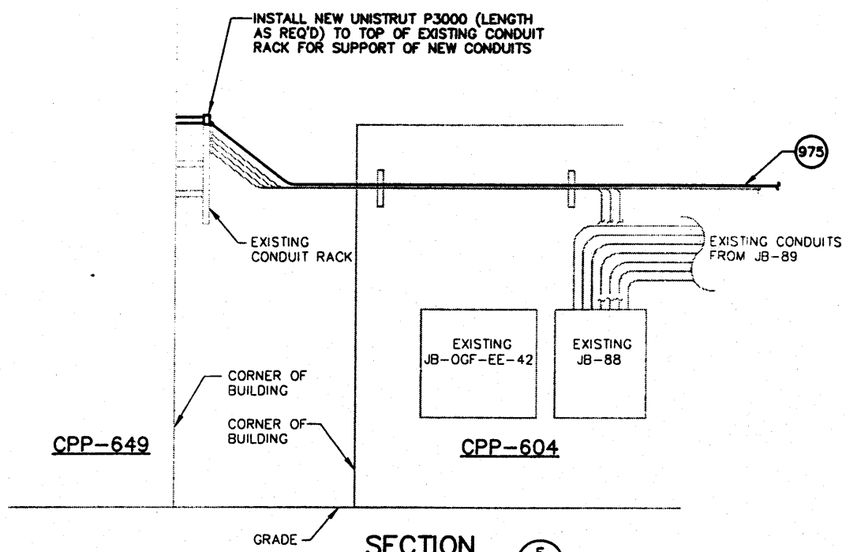

SECTION (E / E-4)
SCALE: 3/8"=1'-0"

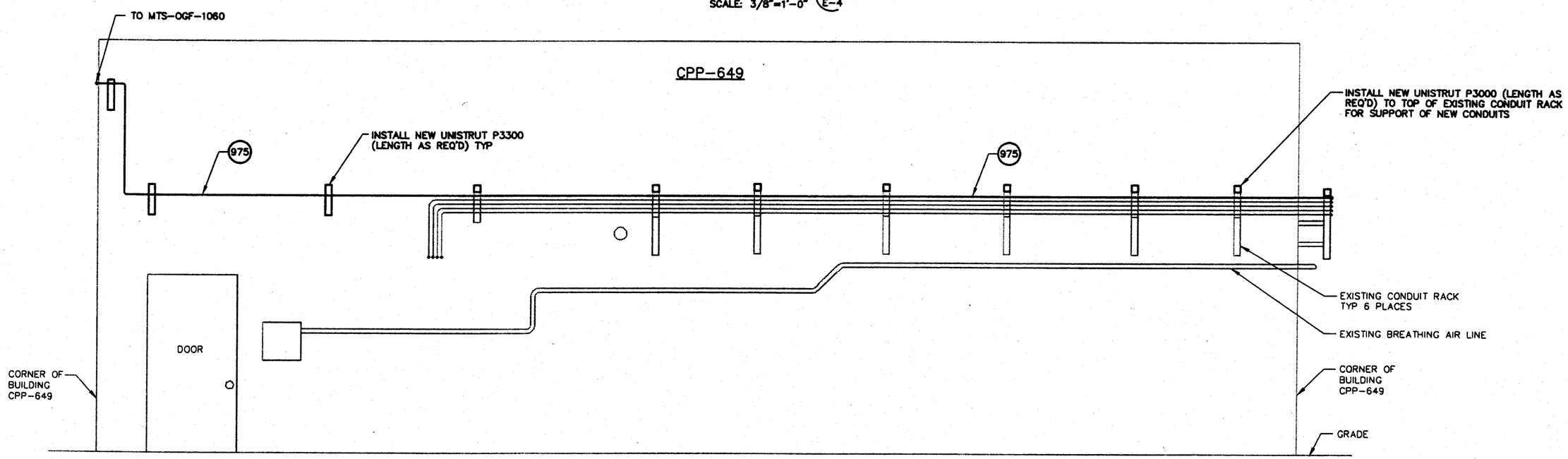

SECTION (F / E-4)
SCALE: 1/2" = 1'-0"

NOTES

1. FOR CONDUIT AND CABLE SCHEDULE SEE SHEET E-9.

REVISION: 0
ORIGINAL SIGNED BY: LARRY HILL
DATE ORIGINAL SIGNED: 9/18/2000
SEAL NUMBER: 9502
ORIGINAL STORED AT: EROB DOCUMENT CONTROL

PROFESSIONAL ENGINEER REGISTERED 9502 STATE OF IDAHO LARRY J. HILL

INDEX CODE NUMBER			
AREA	TYPE	CL	ORG
200	0649	10	090

FOR DRAWING INDEX SEE DRAWING NO. 515158
SCALE: 3/8" = 1'-0"
SCALE: 1/2" = 1'-0"
DESIGN PHASE: AFC
QUALITY LEVEL: 3

SUBCONTRACT NO. S00-588051
REQUESTER: M.S. KAPTEIN
DESIGN: LARRY HILL
DRAWN: M WINTERS
PROJECT NO. 020978
SPEC CODE
FOR REVIEW/APPROVAL SIGNATURES SEE DAR NO. 68366
EFFECTIVE DATE: 9/18/2000

INEEL
Lockheed Martin Idaho Technologies Company
INEEL
OU 3-13 GROUP 1
TANK FARM INTERIM ACTION
PHASE 1 & 2
SECTIONS

SIZE	CAGE CODE	INDEX CODE NUMBER				DWG-	REV
		AREA	TYP	CL	ORG		
D		200	0604	10	090	515212	

SCALE: NOTED
SHEET E-6
MADE FROM 185375

File: 515212.DWG ID: MLW5
Path: H:\vdms\OU3-13-TANKFARM\F-Sets\ [illegible] 10:23 A.M.
Drawn in Model Space

REVISIONS		
REV	DESCRIPTION	EFFECTIVE DATE:

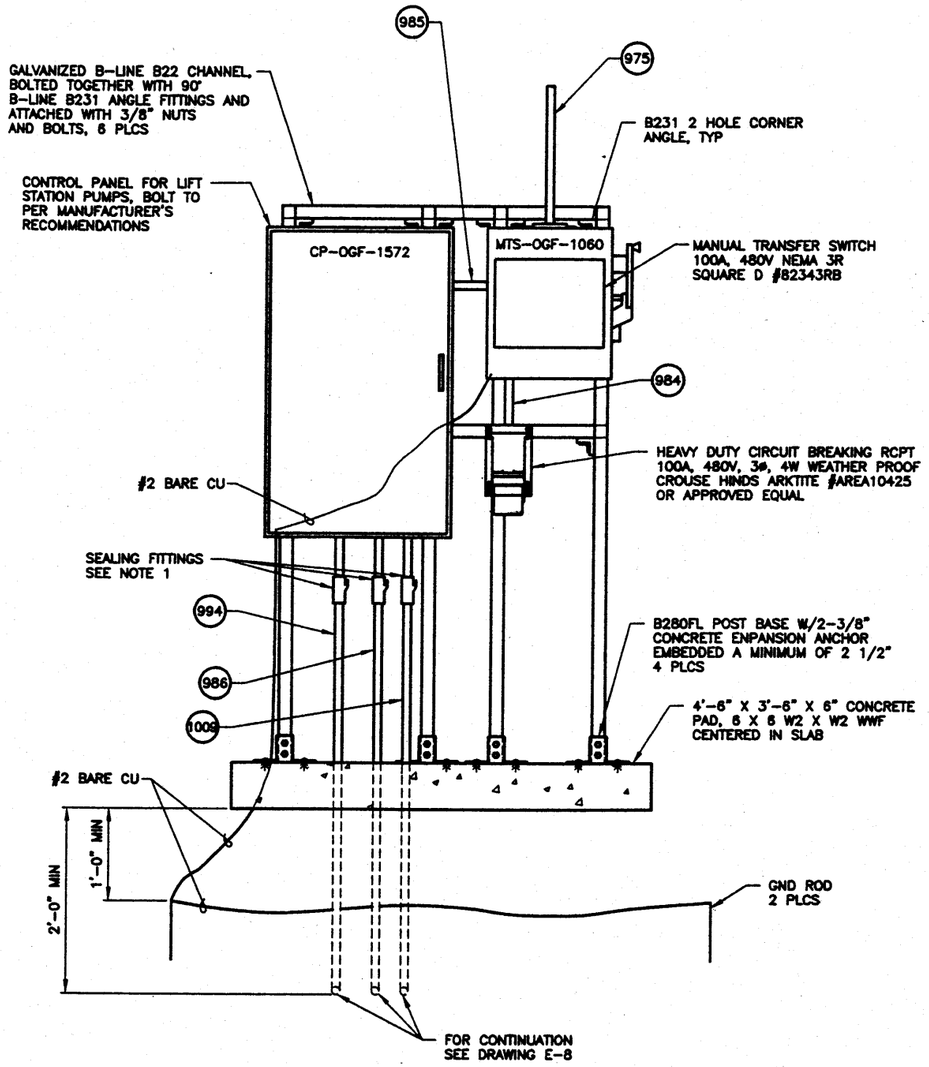

DETAIL 1 / E-4
1 1/2"=1'-0"

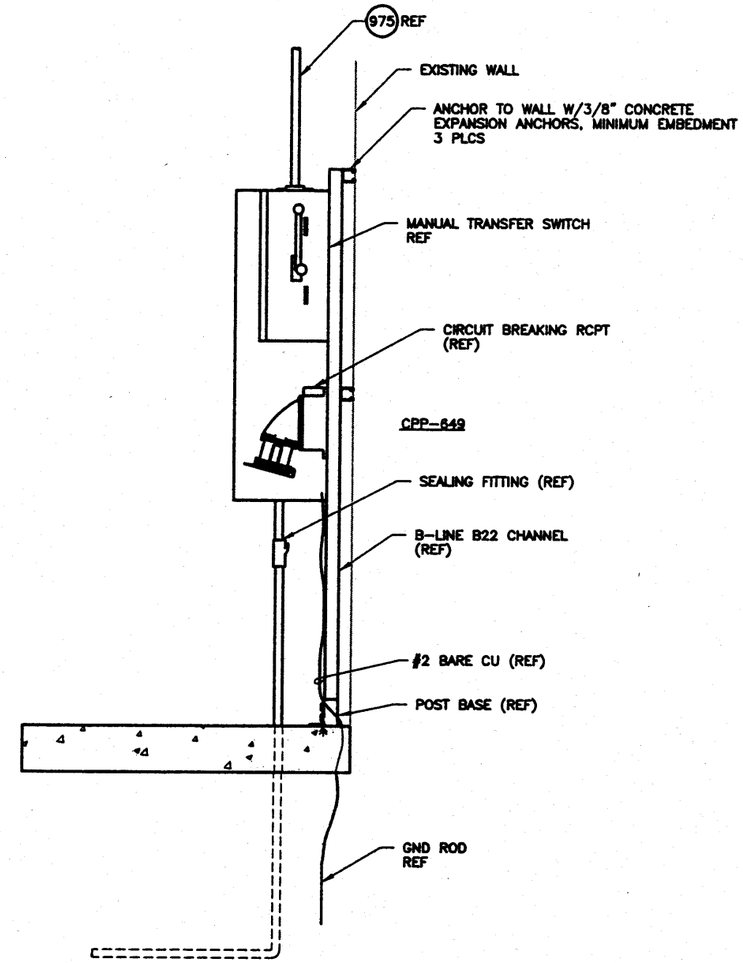

NOTES

1. INSTALL CROUSE-HINDS EYS FITTING WITH CHICO X FIBER AND CHICO SEALING COMPOUND OR APPROVED EQUAL.
2. PUMP CABLES ARE FURNISHED WITH THE PUMPS. PUMPS TO BE CONNECTED TO CONTROL PANEL AND TESTED BY A MANUFACTURERS REPRESENTATIVE UNDER THE SUPERVISION AND AT THE EXPENSE OF THE SUBCONTRACTOR.
3. FOR CONDUIT AND CABLE SCHEDULE SEE SHEET E-9.

REVISION: 0
ORIGINAL SIGNED BY: LARRY HILL
DATE ORIGINAL SIGNED: 9/18/2000
SEAL NUMBER: 9502
ORIGINAL STORED AT: EROB DOCUMENT CONTROL

PROFESSIONAL ENGINEER REGISTERED 9502 STATE OF IDAHO LARRY J. HILL

FOR DRAWING INDEX SEE DRAWING NO.	515158
SCALE: 1 1/2" = 1'-0"	
DESIGN PHASE:	AFC
QUALITY LEVEL:	3
SUBCONTRACT NO.	SOO-588051
REQUESTER:	M.S. KAPTEIN
DESIGN:	LARRY HILL
DRAWN:	M WINTERS
PROJECT NO.	020978
SPEC CODE	
FOR REVIEW/APPROVAL SIGNATURES SEE DAR NO.	68386
EFFECTIVE DATE:	9/18/2000

INEEL
Lockheed Martin Idaho Technologies Company
BECHTEL WASTE & ENERGY IDAHO, LLC

INEEL
OU 3-13 GROUP 1
TANK FARM INTERIM ACTION
PHASE 1 & 2
PUMP CONTROLLER PAD DETAILS

SIZE	CAGE CODE	INDEX CODE NUMBER: AREA	TYPE	CL	DWG	DWG	REV
D		200	0649	10	090	515213	

SCALE: 1 1/2" = 1'-0" SHEET E-7

File: 515213.DWG ID: MLM5
Path: N:\ydm5\OU3-13-TANKFARM\F-Bldg 649\DWG- 10:24 A.M.
Layout Name: D Size

REVISIONS		
REV	DESCRIPTION	EFFECTIVE DATE:

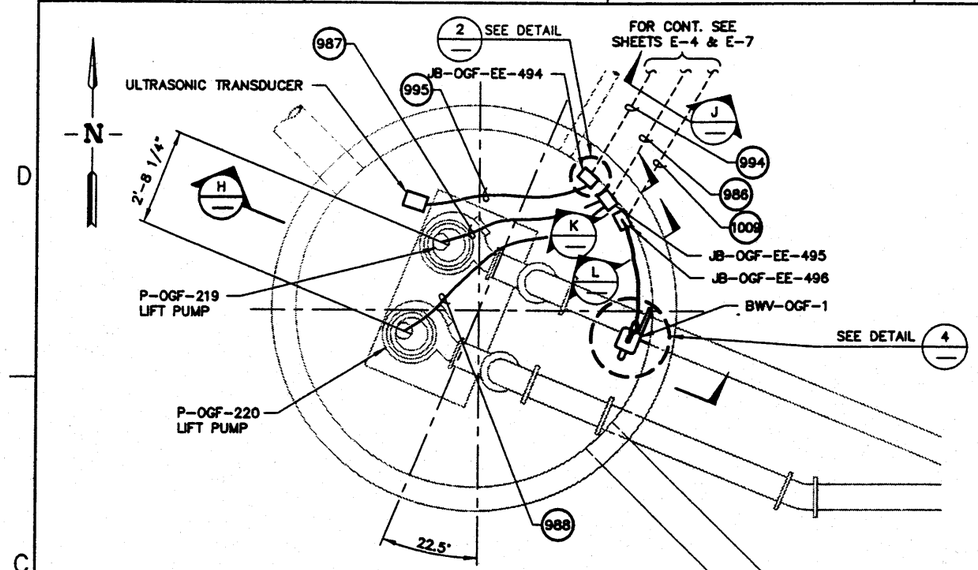

LIFT STATION #1792 PLAN

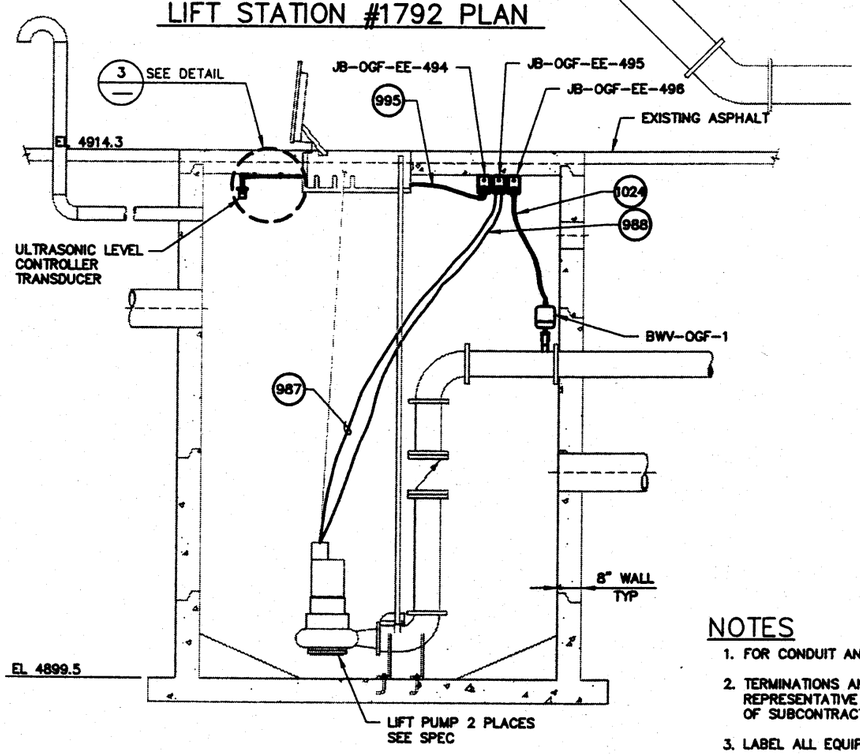

SECTION H

SCALE: 1/2"=1'-0"

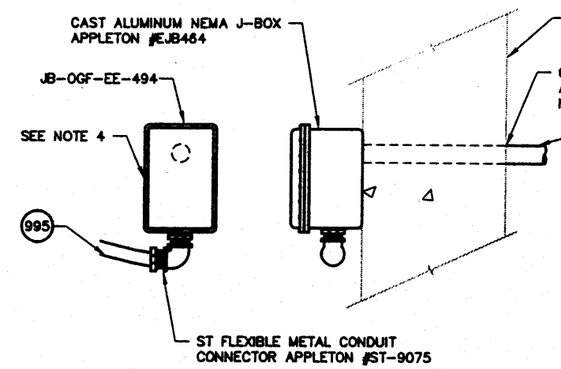

DETAIL 2

3"=1'-0"

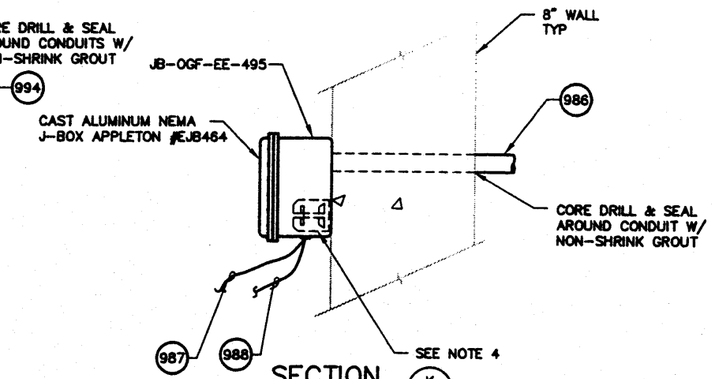

SECTION K

3"=1'-0"

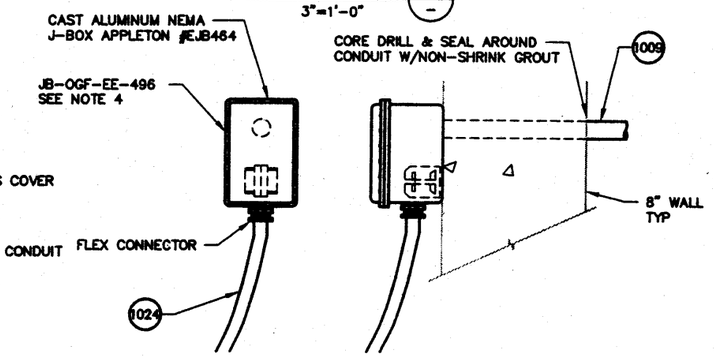

SECTION L

3"=1'-0"

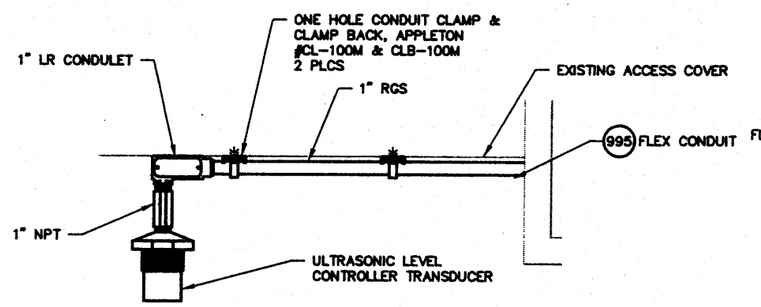

DETAIL 3

3"=1'-0"

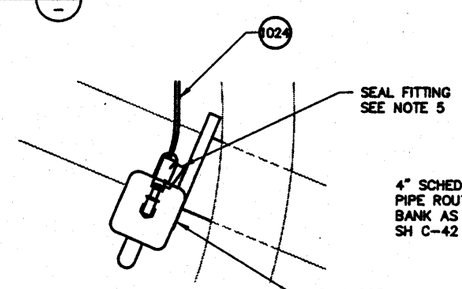

DETAIL 4

3"=1'-0"

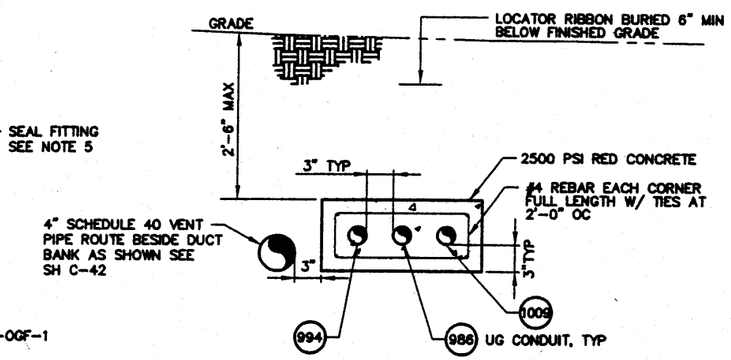

DUCTBANK SECTION J

NTS

NOTES

1. FOR CONDUIT AND CABLE SCHEDULE SEE SHEET E-9.
2. TERMINATIONS AND TESTING TO BE DONE BY MANUFACTURERS REPRESENTATIVE UNDER THE SUPERVISION AND AT THE EXPENSE OF SUBCONTRACTOR.
3. LABEL ALL EQUIPMENT PER SPECIFICATIONS.
4. INSTALL NEW WEATHERPROOF, CLASS 1, DIVISION 2, GROUPS C, D, RATED J-BOX. USE ENTRELEC M4/6 TERMINAL BLOCKS WITH RAIL AND 2 END SECTIONS TO TERMINATE CONDUCTORS. SPLICE COAXIAL CABLE WITH IN-LINE COAXIAL SPLICE CONNECTOR INSTALL CLASS 1 DIVISION 2 RATED LIQUIDTIGHT STRAIN RELIEF CONNECTORS AT CORD ENTRANCES TO BOXES.
5. INSTALL CROUSE-HINDS EYS FITTING WITH CHICO X FIBER AND CHICO SEALING COMPOUND OR APPROVED EQUAL.

REVISION: 0
ORIGINAL SIGNED BY: LARRY HILL
DATE ORIGINAL SIGNED: 9/18/2000
SEAL NUMBER: 9502
ORIGINAL STORED AT: EROB DOCUMENT CONTROL

PROFESSIONAL ENGINEER REGISTERED 9502 STATE OF IDAHO LARRY J. HILL

FOR DRAWING INDEX SEE DRAWING NO. 515158	SUBCONTRACT NO. S00-588051	INEEL (Idaho National Engineering & Environmental Laboratory) LOCKHEED MARTIN IDAHO, LLC
SCALE: 1/2" = 1'-0"	REQUESTER: M.S. KAPTEIN	INEEL OU 3-13 GROUP 1 TANK FARM INTERIM ACTION PHASE 1 & 2 LIFT STATION #1792 PLAN, SECTION & DETAILS
SCALE: 3" = 1'-0"	DESIGN: LARRY HILL	
	DRAWN: M WINTERS	
	PROJECT NO. 020978	
	SPEC CODE	
DESIGN PHASE: AFC	FOR REVIEW/APPROVAL SIGNATURES SEE DAR NO. 68366	SIZE D · CAGE CODE · INDEX CODE NUMBER AREA 200 TYPE 1792 CL 10 DISC 090 · DWG-515214 · REV
QUALITY LEVEL: 3	EFFECTIVE DATE: 9/18/2000	SCALE: NOTED · SHEET E-8

File: 515214.DWG ID: MLWS Layout Name: Layout1
Path: N:\rdh5\OU3-13-TANKFARM\ Date: 09/18/2000 - 10:25 A.M.

REV	REVISIONS DESCRIPTION	EFFECTIVE DATE:

SPCC-WO-1048, PCC-WO-1226 & MCC-OGF-1049 INSTALLATION CONDUIT & WIRE SCHED (CONT'D)

ITEM NO.	FROM	TO	COND SIZE	CKT LGTH	POWER CONDUCTOR	NEUT	GND	REFERENCE DRAWING	REMARKS
900	MCC-OGF-1049 CKT #2E MCC-OGF-1049 CKT #2G	PB-WL-EE-167	1"	15'	3#10 3#10		#12 #12	18.E-64 18.E-74	BLO-WL-523 (SEE CONDUIT 94) P-WL-228 (SEE CONDUIT 948)
901	MCC-OGF-1049 CKT #2J MCC-OGF-1049 CKT #2N	PB-WL-EE-167	1"	15'	3#10 3#10,4#14		#12 #12	18.E-64 18.E-74	MCC-WDS-294 (SEE CONDUIT 942) BLO-WL-524 (SEE CONDUIT 958)
902	MCC-OGF-1049 CKT #5L	PB-WL-EE-167	1"	15'	3#8,3#14		#10	18.E-64 18.E-74	BLO-WL-209 (SEE CONDUIT 942)
903	MCC-OGF-1049 CKT #3E MCC-OGF-1049 CKT #3L	PB-WL-EE-167	1"	15'	3#10,3#14 3#10		#12 #12	18.E-64 18.E-74	BLO-WO-526 (SEE CONDUIT 954) P-WL-206A (SEE CONDUIT 952)
904	MCC-OGF-1049 CKT #5G MCC-OGF-1049 CKT #4D	PB-WL-EE-167	1"	15'	3#10,3#14 3#10,4#14		#12 #12	18.E-64 18.E-74	P-WO-201 (SEE CONDUIT 950) DOR-WO-403 (SEE CONDUIT 950)
905	MCC-OGF-1049 CKT #4H	PB-WL-EE-167	1"	15'	3#10,3#14		#12	18.E-64 18.E-74	BLO-WO-527 (SEE CONDUIT 954)
906	MCC-OGF-1049 CKT #4N	PB-WL-EE-167	1 1/2"	15'	3#2.5#14		#8	18.E-64 18.E-74	BLO-OGF-214 (SEE CONDUIT 944)
907	**MCC-OGF-1049 CKT #3J**	**PB-WL-EE-167**	**1"**	**-**	**3#8**		**#8**	**E-2 E-3**	**CP-OGF-1572**

MADE FROM 185360

SPCC-WO-1048, PCC-WO-1226 & MCC-OGF-1049 INSTALLATION CONDUIT & WIRE SCHED (CONT'D)

ITEM NO.	FROM	TO	COND SIZE	CKT LGTH	POWER CONDUCTOR	NEUT	GND	REFERENCE DRAWING	REMARKS
975	**PB-WL-EE-169**	**MTS-OGF-1060**	**1"**	**·**	**3#8**		**#8**	**E-3 THRU E-7**	**PUMP CONTROLLER POWER**
984	**CIRCUIT BREAKING RCPT**	**MTS-OGF-1060**	**1"**	**·**	**3#8**		**#8**	**E-7**	**PUMP CONTROLLER STANDBY POWER**
985	**MTS-OGF-1060**	**CP-OGF-1572**	**1"**	**·**	**3#8**		**#8**	**E-7**	**PUMP CONTROLLER POWER**
986	**CP-OGF-1572**	**JB-OGF-EE-495**	**1"**	**·**	**6#10 4#14**		**#10**	**E-7 E-8**	**J-BOX IN CATCH BASIN (PUMP POWER)**
987	**JB-OGF-EE-495**	**P-OGF-219**	**·**	**·**	**MFR. CORD**		**·**	**E-8**	**PUMP MOTOR POWER/CONTROL**
988	**JB-OGF-EE-495**	**P-OGF-220**	**·**	**·**	**MFR. CORD**		**·**	**E-8**	**PUMP MOTOR POWER/CONTROL**
994	**CP-OGF-1572**	**JB-OGF-EE-494**	**1"**	**·**	**RG-62U**		**·**	**E-7 E-8**	**J-BOX IN CATCH BASIN (PUMP CONTROL)**
995	**JB-OGF-EE-494**	**LEVEL TRANSDUCER**	**3/4" FLEX**	**·**	**MFR. CORD**			**E-7 E-8**	**LEVEL CONTROL**
998	**PB-WL-EE-167**	**PB-WL-EE-169**	**1"**	**·**	**3#8**		**#8**	**E-5**	**CP-OGF-1572**

MADE FROM 185362

SPCC-WO-1048, PCC-WO-1226 & MCC-OGF-1049 INSTALLATION CONDUIT & WIRE SCHED (CONT'D)

ITEM NO.	FROM	TO	COND SIZE	CKT LGTH	POWER CONDUCTOR	NEUT	GND	REFERENCE DRAWING	REMARKS
1009	CP-OGF-1572	JB-OGF-EE-496	1"	·	5#14		·	E-7 E-8	DRAIN VALVE CONTROL/HEATER
1024	JB-OGF-EE-496	BWV-OGF-1	3/4" FLEX	·	5#14		·	E-7 E-8	DRAIN VALVE CONTROL/HEATER

MADE FROM 185363

MOTOR CONTROL CENTER SCHEDULE (WEST SIDE)

MCC-OGF-1049

MCC VOLTS 480/277V WIRE 4 PHASE 3 CONTROL VOLTAGE 120V
BUSS RATING: HORIZONTAL 600 VERTICAL 300
LOCATION: CPP-1773 UPPER LEVEL

CKT NO	NAMEPLATE - LABEL	HP/KVA	FLA	STARTER SIZE		OC PROTECTION FRAME SIZE	OC PROTECTION TRIP SET	CONTROLS START STOP	CONTROLS HOA	CONTROLS PILOT LIGHT	REMARKS SEE NOTE 3
1C	SPCC-WO-1048		-			125A	-				
1E	LIGHTS PEW CELL	2.5	-		1	20A	-		X	X	CONTACTOR
1G	RECT-WN-1	4.5	-		1	20A	-		X	X	CONTACTOR
1J	RECT-WN-7	4.5	-		1	20A	-		X	X	CONTACTOR
1N	MAIN					600A	500A				SEE NOTE 5
2CL	RCPT PM AREA						60A				③
2CR	SPARE						60A				
2E	BLO-WL-523	10	14		1	30A	•		X	X	①
2G	P-WL-228	5	7.6		1	15A	•		X	X	①
2J	MCC-WDS-294	6	-		1	20A	-		X	X	① CONTACTOR
2L	P-WL-230	7.5	11		1	15A	•		X	X	③
2N	BLO-WL-524	2	3.4		1	7A	•		X	X	③
3C	RCPT CPP 649	-	-		-	60A					③
3E	BLO-WO-526	3/4	1.4		1	3A	•		X	X	①
3G	CRN-WO-402	7.5	-		1	15A	•		X	X	① CONTACTOR
3J	**CP-OGF-1572**	**15**	**22**		**2**	**30A**	**-**		**X**	**X**	
3L	P-WL-206A	2	3.4		1	7A	•		X	X	①

MADE FROM 185353

NAMEPLATE REPLACEMENT SCHEDULE

OLD DESCRIPTION COMPARTMENT	OLD DESCRIPTION EQUIPMENT	NEW DESCRIPTION COMPARTMENT	NEW DESCRIPTION EQUIPMENT	REMARKS
1C	SPACE	1C	MTS-OGF-249	INSTALL NEW NAMEPLATE
1E	SPACE	1E	LIGHTS PEW CELL	INSTALL NEW NAMEPLATE
1G	SPACE	1G	RECT-WN-1	INSTALL NEW NAMEPLATE
1J	SPACE	1J	RECT-WN-7	INSTALL NEW NAMEPLATE
2C	SPACE	2C	RCPTS PM AREA	INSTALL NEW NAMEPLATE
2J	DSW-WDS-294	2J	MCC-WDS-294	REMOVE AND REPLACE NAMEPLATE
2L	P-WL-229	2L	P-WL-230	REMOVE AND REPLACE NAMEPLATE
2N	P-WN-204	2N	BLO-WL-524	REMOVE AND REPLACE NAMEPLATE
3C	SPACE	3C	RCPTS CPP-649	INSTALL NEW NAMEPLATE
3G	AHU-UTI-5504	3G	CRN-WO-402	REMOVE AND REPLACE NAMEPLATE
3J	**COM-WN-260**	**3J**	**CP-OGF-1572**	**REMOVE AND REPLACE NAMEPLATE, SEE NOTE 1**
4D	SPACE	4D	DOR-WO-403	REMOVE AND REPLACE NAMEPLATE

MADE FROM 185354

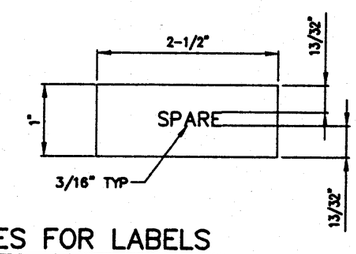

NOTES FOR LABELS

1. FURNISH AND INSTALL NEW LABELS PER THE NAMEPLATE REPLACEMENT SCHEDULE. LABELS SHALL BE BLACK FACED WITH WHITE LETTERING ON LAMINATED PLASTIC WITH BEVELED EDGE. LABELS SHALL BE SCREWED TO COMPARTMENT USING EXISTING SCREWS.

MCC LABEL DETAIL

SCALE: NTS

REVISION: 0
ORIGINAL SIGNED BY: LARRY HILL
DATE ORIGINAL SIGNED: 9/18/2000
SEAL NUMBER: 9502
ORIGINAL STORED AT: EROB DOCUMENT CONTROL

PROFESSIONAL ENGINEER REGISTERED 9502 STATE OF IDAHO LARRY J. HILL

INDEX CODE NUMBER AREA	TYPE	CL	ORIG	INDEX CODE NUMBER AREA	TYPE	CL	ORIG
200	0649	10	090	200	0604	10	090

FOR DRAWING INDEX SEE DRAWING NO. 515158
NO SCALE
DESIGN PHASE: AFC
QUALITY LEVEL: 3

SUBCONTRACT NO. S00-588051
REQUESTER: M.S. KAPTEIN
DESIGN: LARRY HILL
DRAWN: M WINTERS
PROJECT NO. 020978
SPEC CODE
FOR REVIEW/APPROVAL SIGNATURES SEE DAR NO. 68366
EFFECTIVE DATE: 9/18/2000

INEEL
INEEL
OU 3-13 GROUP 1
TANK FARM INTERIM ACTION
PHASE 1 & 2
SCHEDULES AND LABEL DETAIL

SIZE D | CAGE CODE | INDEX CODE NUMBER AREA 200 TYPE 1773 CL 10 ORIG 090 | DWG-515215 | REV
SCALE: NONE | SHEET E-9

MADE FROM 185360, 185362, 185363, 185353 & 185354

File: 515215.DWG ID: MLW5 Drawn in Model Space
Path: N:\rdb5\OU3-13-TANKFARM\AP-Sheets dwg\dwg\DFC- 10:26 A.M.

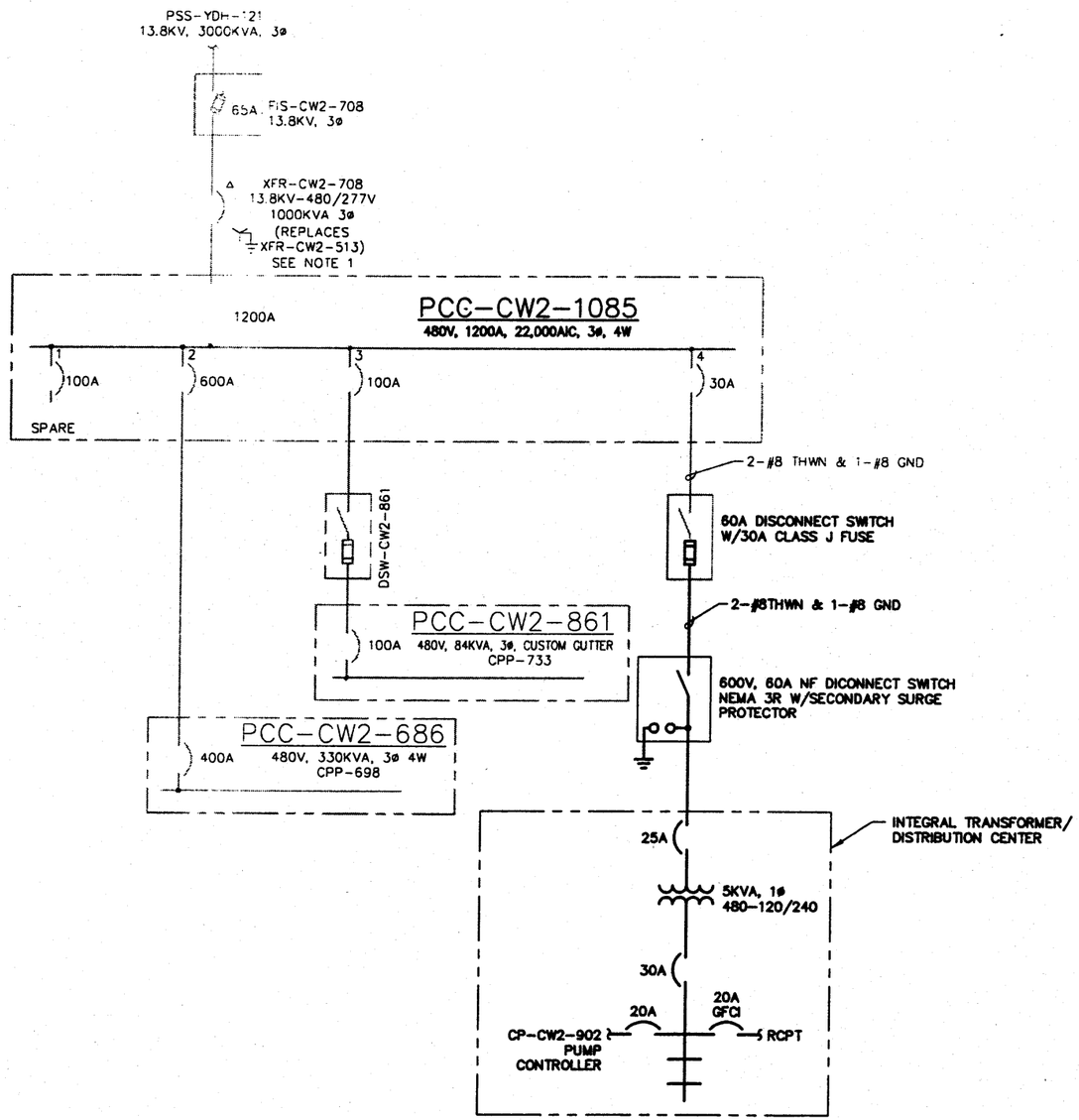

REVISIONS

REV	DESCRIPTION	EFFECTIVE DATE:

REVISION: 0
ORIGINAL SIGNED BY: LARRY HILL
DATE ORIGINAL SIGNED: 9/18/2000
SEAL NUMBER: 9502
ORIGINAL STORED AT: EROB DOCUMENT CONTROL

PROFESSIONAL ENGINEER REGISTERED 9502 STATE OF IDAHO LARRY J. HILL

FOR DRAWING INDEX SEE DRAWING NO. 515158	SUBCONTRACT NO. SOO-588051	INEEL
NO SCALE	REQUESTER: M.S. KAPTEIN DESIGN: LARRY HILL DRAWN: M WINTERS PROJECT NO. 020978 SPEC CODE	INEEL OU 3-13 GROUP 1 TANK FARM INTERIM ACTION PHASE 1 & 2 PCC-CW2-1085 ONE LINE DIAGRAM
DESIGN PHASE: AFC	FOR REVIEW/APPROVAL SIGNATURES SEE DAR NO. 68366	SIZE D · CAGE CODE · INDEX CODE NUMBER: AREA 200, TYPE 0400, CL 10, ORIG 090 · DWG-515216 · REV
QUALITY LEVEL: 3	EFFECTIVE DATE: 9/18/2000	SCALE: NONE · SHEET E-10

File: 515216.DWG ID: MLW5 Drawn in Model Space
Path: H:\rdh5\OU3-13-TANKFARM\...\DWG-515216.DWG 10:27 A.M.

REVISIONS		
REV	DESCRIPTION	EFFECTIVE DATE:

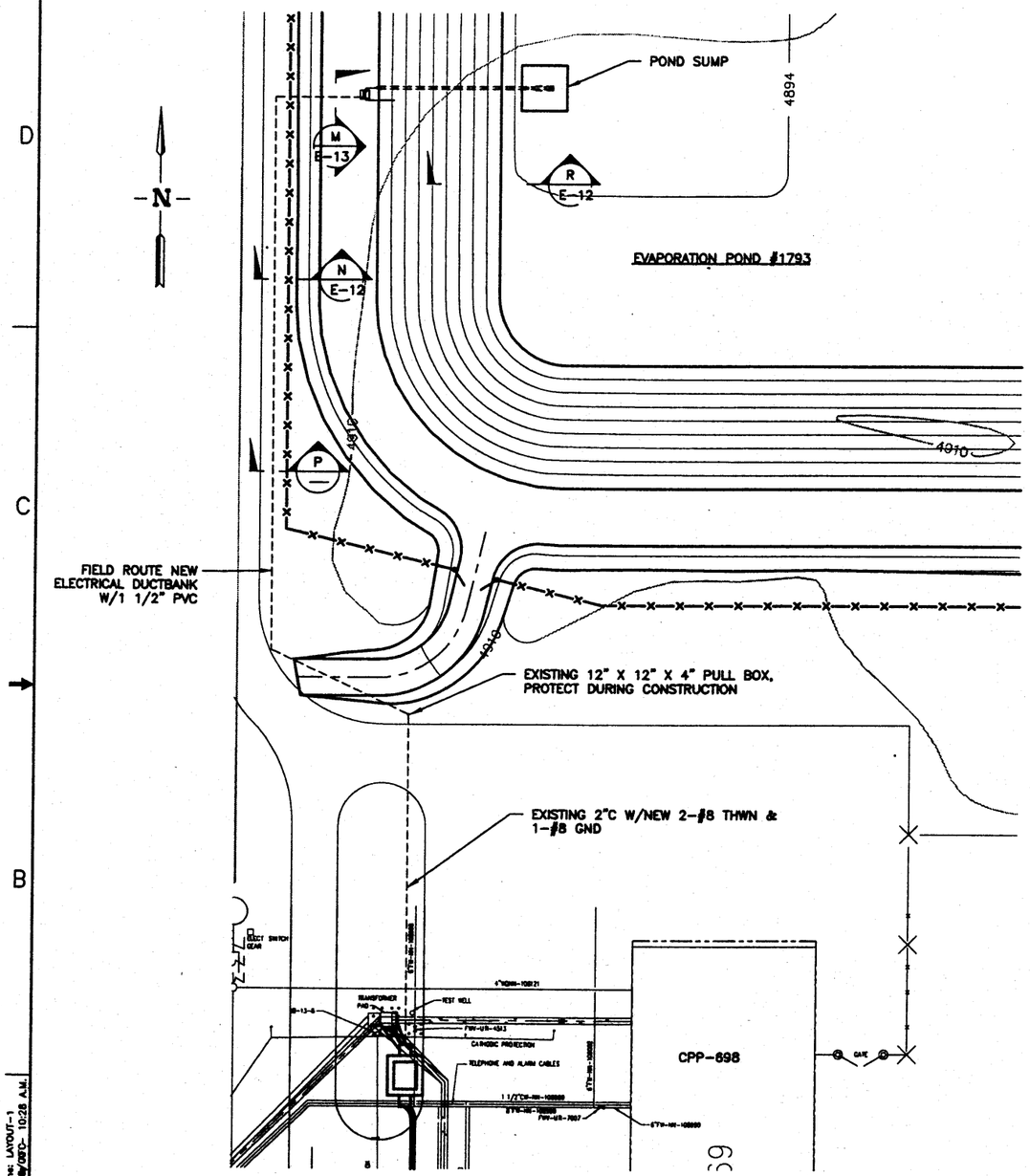

PARTIAL PLAN CONDUIT LAYOUT

SCALE: 1" = 30'-0"

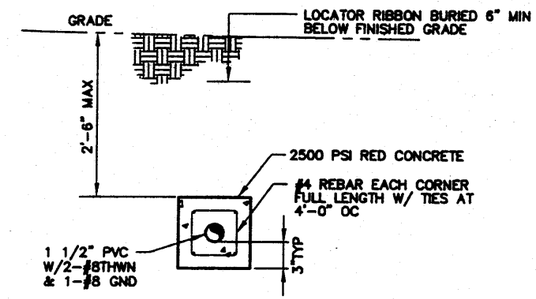

DUCTBANK SECTION (P)

NTS

X-REF DRAWING

515220.DWG

REVISION: 0
ORIGINAL SIGNED BY: LARRY HILL
DATE ORIGINAL SIGNED: 9/18/2000
SEAL NUMBER: 9502
ORIGINAL STORED AT: EROB DOCUMENT CONTROL

PROFESSIONAL ENGINEER REGISTERED 9502 STATE OF IDAHO LARRY J. HILL

FOR DRAWING INDEX SEE DRAWING NO. 515158	SUBCONTRACT NO. SOO-588051	INEEL
SCALE: 1" = 30.0'	REQUESTER: M.S. KAPTEIN	INEEL OU 3-13 GROUP 1 TANK FARM INTERIM ACTION PHASE 1 & 2 PARTIAL CONDUIT LAYOUT PLAN & SECTION
	DESIGN: LARRY HILL	
	DRAWN: M WINTERS	
	PROJECT NO. 020978	
	SPEC CODE	
DESIGN PHASE: AFC	FOR REVIEW/APPROVAL SIGNATURES SEE DAR NO. 68366	SIZE D; CAGE CODE; INDEX CODE NUMBER: AREA 200, TYPE 1793, CL 10, ORIG 090; DWG-515217; REV
QUALITY LEVEL: 3	EFFECTIVE DATE: 9/18/2000	SCALE: NOTED; SHEET E-11

File: 515217.DWG ID: MLWS Layout Name: LAYOUT-1
Path: H:\rdh5\OU3-13-TANKFARM\ Date: 09/18/2000 10:28 A.M.

REVISIONS		
REV	DESCRIPTION	EFFECTIVE DATE:

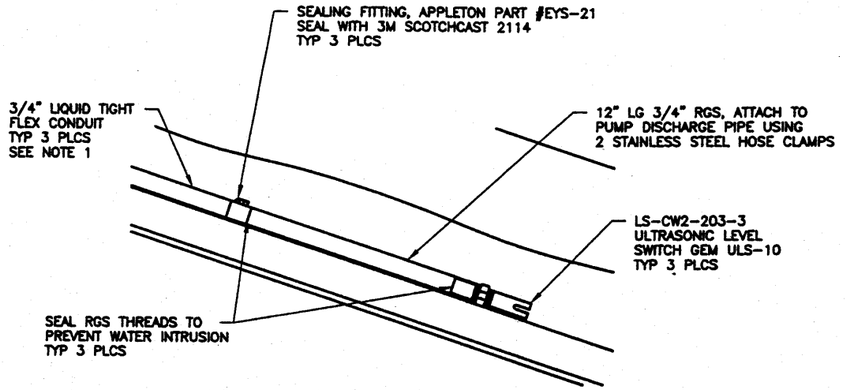

ULTRASONIC LEVEL SWITCH DETAIL (5/— 5/C-23)

SCALE: 3" = 1'-0"

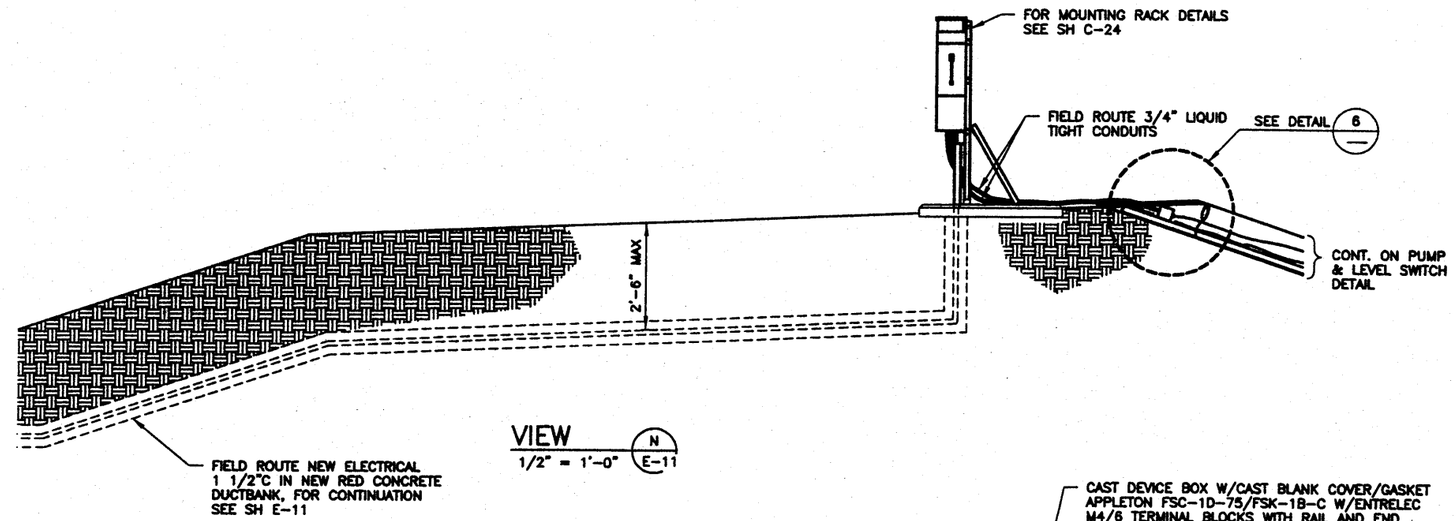

VIEW (N/E-11)

1/2" = 1'-0"

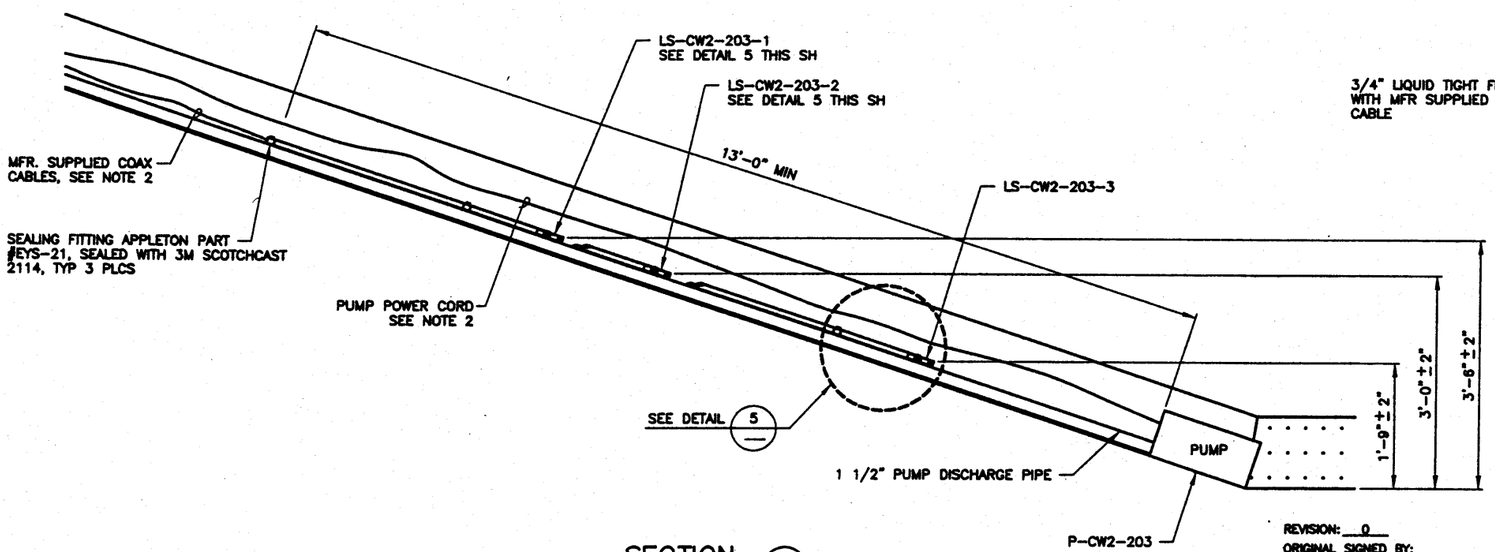

SECTION (R/E-11)

1" = 1'-0"

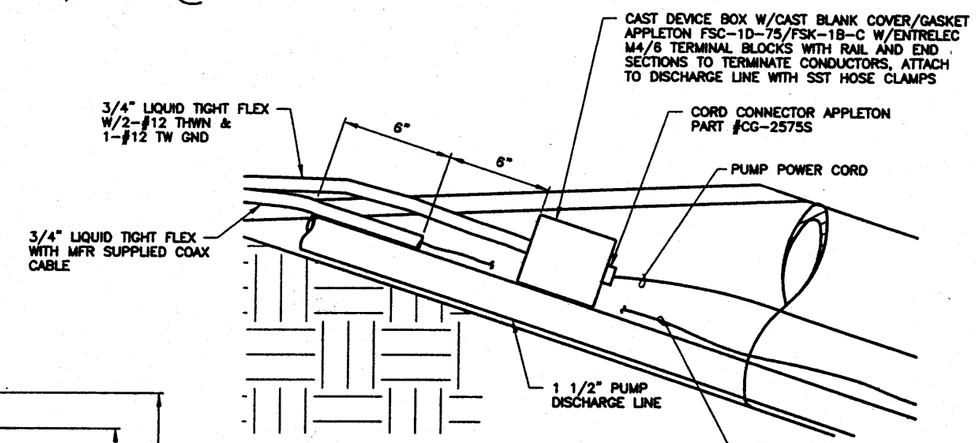

DETAIL (6/—)

1/4"=1'-0"

NOTES

1. ATTACH 3/4" LIQUID TIGHT FLEX CONDUITS TO 1 1/2" PUMP DISCHARGE LINE WITH SST HOSE CLAMPS 3'-0" O.C. MAX.
2. ATTACH PUMP POWER CORD AND LEVEL SWITCH COAX CABLE TO 1 1/2" PUMP DISCHARGE LINE WITH SST HOSE CLAMPS 3'-0" O.C. MAXIMUM. PROTECT CABLE JACKETS FROM DAMAGE CAUSED BY CLAMPS USING RUBBER OR EQUIVALENT.

SCALE: 1/2" = 1'-0"

REVISION: 0
ORIGINAL SIGNED BY: LARRY HILL
DATE ORIGINAL SIGNED: 9/18/2000
SEAL NUMBER: 9502
ORIGINAL STORED AT: ER08 DOCUMENT CONTROL

PROFESSIONAL ENGINEER REGISTERED 9502 STATE OF IDAHO LARRY J. HILL

FOR DRAWING INDEX SEE DRAWING NO. 515158	SUBCONTRACT NO. S00-588051	INEEL
SCALE: 3" = 1'-0" / SCALE: 1" = 1'-0"	REQUESTER: M.S. KAPTEIN	INEEL OU 3-13 GROUP 1 TANK FARM INTERIM ACTION PHASE 1 & 2 VIEW AND DETAILS
	DESIGN: LARRY HILL	
	DRAWN: M WINTERS	
	PROJECT NO. 020878	
	SPEC CODE	
DESIGN PHASE: AFC	FOR REVIEW/APPROVAL SIGNATURES SEE DAR NO. 68366	SIZE D / CAGE CODE / INDEX CODE NUMBER AREA 200, TYP 1793, CL 10, DISC 090 / DWG-515218 / REV
QUALITY LEVEL: 3	EFFECTIVE DATE: 9/18/2000	SCALE: NOTED / SHEET E-12

File: 515218.DWG ID: MJWS
Path: N:\data\OU3-13-TANKFARM\E-Basis display 08TC- 10:29 A.M.
Layout Name: D Size

REVISIONS		
REV	DESCRIPTION	EFFECTIVE DATE:

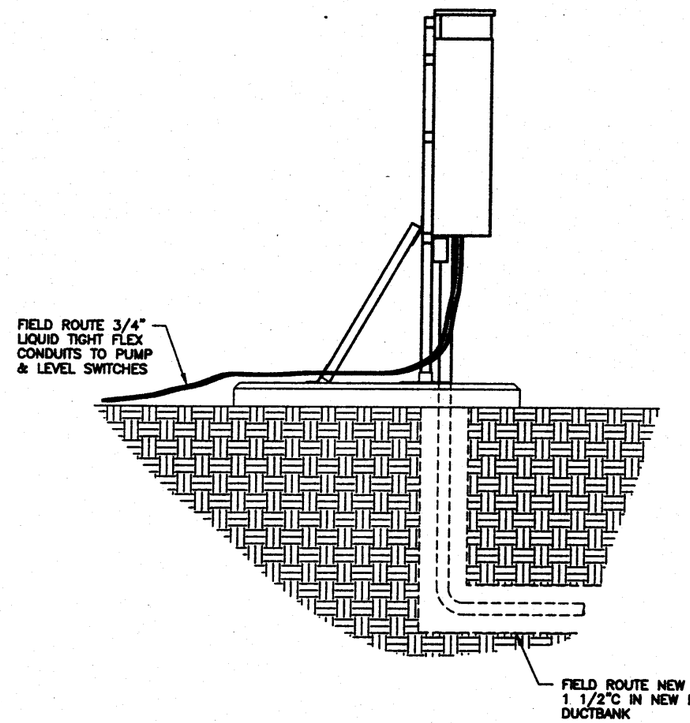

SIDE

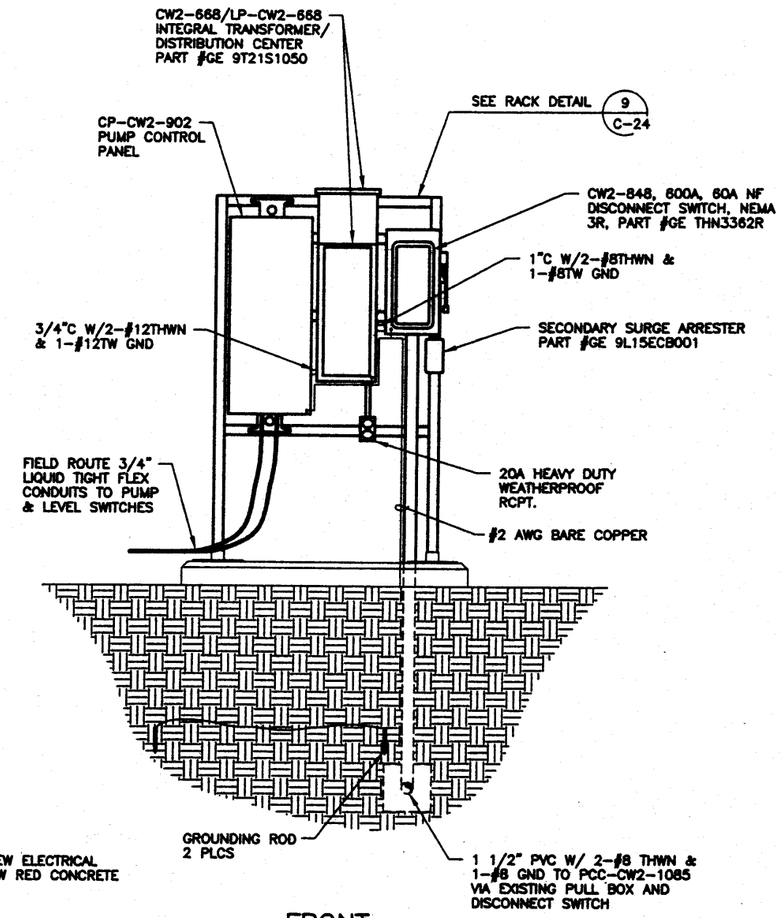

FRONT

VIEW M
1" = 1'-0" E-11

REVISION: 0
ORIGINAL SIGNED BY: LARRY HILL
DATE ORIGINAL SIGNED: 9/18/2000
SEAL NUMBER: 9502
ORIGINAL STORED AT: EROB DOCUMENT CONTROL

PROFESSIONAL ENGINEER REGISTERED 9502 STATE OF IDAHO LARRY J. HILL

FOR DRAWING INDEX SEE DRAWING NO. 515158	SUBCONTRACT NO. S00-588051	INEEL (Idaho National Engineering & Environmental Laboratory) LOCKHEED MARTIN IDAHO, LLC
SCALE: 1" = 1'-0"	REQUESTER: M.S. KAPTEIN	INEEL OU 3-13 GROUP 1 TANK FARM INTERIM ACTION PHASE 1 & 2 RACK ELEVATION & LAYOUT
	DESIGN: LARRY HILL	
	DRAWN: M WINTERS	
	PROJECT NO. 020978	
	SPEC CODE	
DESIGN PHASE: AFC	FOR REVIEW/APPROVAL SIGNATURES SEE DAR NO. 68366	SIZE D · CAGE CODE · INDEX CODE NUMBER AREA 200 TYPE 1793 CL 10 DWG 090 · DWG-515219 · REV
QUALITY LEVEL: 3	EFFECTIVE DATE: 9/18/2000	SCALE: NOTED · SHEET E-13

File: 515219.DWG ID: MLW5 Layout Name: D Size
Path: H:\(drb5)OU3-13-TANKFARM\F-Grade, display/OFC- 10:30 A.M.

Appendix G

Quality Level Designation

414.02
11/10/98
Rev. 02

QUALITY LEVEL DESIGNATION AND RECORD

Quality Level Evaluation Performed By: R. G. Thompson Date: 04/07/2000

Facility/Structure/System: OU 3-13 Tank Farm Interim Action Quality Level: 3

IDENTIFICATION OF ITEM	QUALITY LEVEL DESIGNATION	TECHNICAL JUSTIFICATION
All OU 3-13, Group 1 activities Those activities include upgrading existing surface and building drainages, installing new drainage ditches, and constructing new storm water collection ponds at INTEC.	3	The Group I activities will not intrude into the immeidate tank farm area and will be done in a near background radiation/contamination fields. Even though, the tank farm is a Hazard Class 2 facility this work does not fit the definitions for quality level 2, (i.e., Potential for significant on-site consequences form release of radioactive or hazardous material.) If the soil cut around the tank farm causes significant increases in radiation levels, the quality level determination should be revisited.

Note: Assign and record quality level in accordance with MCP-540, and obtain appropriate approvals. Completed and approved form becomes a quality assurance record. (Master Equipment List may be used as a Q-List.)

R. G. Thompson	[signature]	4/7/2000
Quality Assurance Concurrence Printed/Typed Name	Quality Assurance Concurrence Signature	Date
R. L. Dawson	R. L. Dawson	4/10/200
Facility/Program/Project Approval Printed/Typed Name	Facility/Program/Project Approval Signature	Date

Appendix H

Construction Schedule

Activity ID	Activity Description	Orig Dur	Early Start	Early Finish	MILE
C11000	Subcontractor Training and Submittals	20	02OCT00	27OCT00	
C11010	Mobolize - Evap Pond	5	30OCT00	03NOV00	
C11020	Survey and Plot	5	06NOV00	10NOV00	
C11030	Clear and Grub	5	13NOV00	17NOV00	
C11040	FY-01 Excavate and Haul Soil from Evap Pond Site	20	20NOV00	19DEC00	
C11050	Final Grade and Prep	5	20DEC00	03JAN01	
C11060	Break for Winter	70	04JAN01	11APR01	
C11070	Liner, Equip. and Instrumentation Installation	15	12APR01	02MAY01	
C11080	Demob - Evap Pond	5	03MAY01	09MAY01	
C11090	Moblize - Tank Farm Perimeter	5	30OCT00	03NOV00	
C11100	Lift Station Installation	30	06NOV00	19DEC00	
C11110	Storm Drain Upgrades	20	06NOV00	05DEC00	
C11120	Grading of TF Perimeter	10	06DEC00	19DEC00	
C11130	Break for Winter	75	20DEC00	11APR01	
C11140	Surface Seal of TF Perimeter	40	12APR01	07JUN01	
C11150	Demob - TF Perimeter	8	08JUN01	19JUN01	
C11160	Delay due to Interference (C-40)	29	30OCT00	11DEC00	
C11170	Break for Winter	81	12DEC00	11APR01	
C11180	Moblize Tank Farm	5	12APR01	18APR01	
C11190	Tank Farm Ditch Construction	20	19APR01	16MAY01	
C11200	Tank Farm Grading	10	17MAY01	31MAY01	
C11210	Tank Farm Spray Coating	40	01JUN01	27JUL01	
C11220	Demob Tank Farm	5	30JUL01	03AUG01	
C11230	SO Testing and Turnover	39	06AUG01	28SEP01	
C11240	Construction Complete	0		28SEP01	I3
C11243	As Build - FY01	10	01OCT01	12OCT01	
C11250	Develop Prefinal Inspection Report - FY01	4	15OCT01	18OCT01	
C11260	Develop Prefinal Inspection Report - FY02	15	19OCT01	08NOV01	
C11270	IRC Review - Prefinal Inspection Report	10	09NOV01	26NOV01	
C11280	IRC Comment Incorp - Prefinal Inspection Rpt	10	27NOV01	10DEC01	
C11290	OU 3-13 Gp 1 Dft Pre-Final Insp Rpt Sent to DOE-	0		10DEC01	E4
C11300	DOE Review - Prefinal Inspection Report	10	11DEC01	24DEC01	
C11310	DOE Comment Incorp - Prefinal Inspection Rpt	10	02JAN02	15JAN02	
C11320	OU 3-13 Gp 1 Dft Pre-Final Insp Rpt Sent by DOE-	0		15JAN02	E4
C11330	EPA/IDHW Review - Prefinal Inspection Rpt	22	16JAN02	14FEB02	
C11340	EPA/IDHW Comment Incorp - Prefinal Inspect Rp	22	15FEB02	18MAR02	

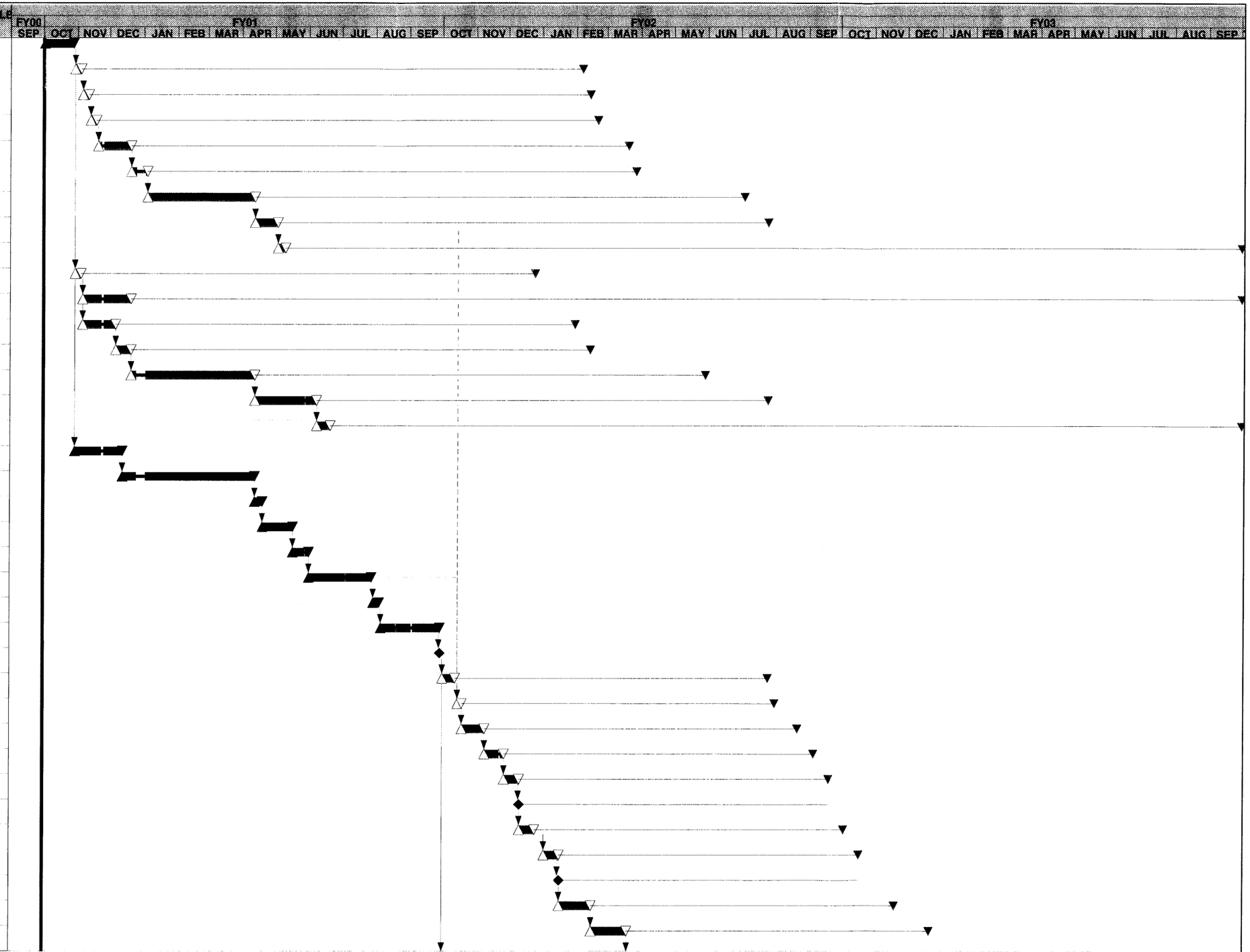

Start Date	01OCT00
Finish Date	30SEP03
Data Date	01OCT00
Run Date	03AUG00 15:13

Early Bar
Float Bar
Progress Bar
Critical Activity

© Primavera Systems, Inc.

WAG3 - 0601
LT-A0 (All)

Sheet 1 of 2

Bechtel BWXT Idaho, LLC

OU 3-13 Grp I Tank Farm Interim Act

WAG3/Groups

Date	Revision	Checked	Approved

This is a working schedule and does not establish enforceable milestones

Activity ID	Activity Description	Orig Dur	Early Start	Early Finish	MILE
C11350	Corrective Actions	45	19MAR02	20MAY02	
C11360	Final Inspection	5	21MAY02	28MAY02	
C11370	Prepare Final Inspection Report	16	29MAY02	19JUN02	
C11380	Document Preparation of Dft RA Report	40	26MAR02	20MAY02	
C11390	IRC Review - Dft RA Report	10	21MAY02	04JUN02	
C11400	IRC Comment Incorp - Dft RA Report	10	05JUN02	18JUN02	
C11410	OU 3-13 Gp 1 Dft RA Rpt Sent DOE-ID for Review	0		18JUN02	E4
C11420	DOE Review - Dft RA Report	10	19JUN02	02JUL02	
C11430	DOE Comment Incorp - Dft RA Rpt	10	03JUL02	17JUL02	
C11440	OU 3-13 Gp 1 Dft RA Rpt Sent by DOE-ID to EPA/ID	0		17JUL02	E1
C11450	OU 3-13 Gp 1 Dft RA Rpt Sent by DOE-ID to DOE-HQ	0		17JUL02	E4
C11460	Review of Dft RA Rpt by EPA/IDHW	33	18JUL02	03SEP02	
C11470	OU 3-13 Gp 1 Dft RA Rpt Comments Sent by EPA/ID	0		03SEP02	E4
C11480	EPA/IDHW Comment Incorp - Dft RA Rpt	19	04SEP02	30SEP02	
C11485	EPA/IDHW Comment Incorp - Dft RA Rpt	14	01OCT02	18OCT02	
C11490	OU 3-13 Gp 1 Dft Final RA Rpt Sent to DOE-ID for	0		18OCT02	E4
C11500	DOE Review - Dft Final RA Report	10	21OCT02	01NOV02	
C11510	DOE Comment Incorp - Dft Final RA Rpt	10	04NOV02	15NOV02	
C11520	OU 3-13 Gp 1 Dft Final RA Rpt Sent by DOE-ID	0		15NOV02	E4
C11535	Review of Dft Final RA Rpt by EPA/IDHW	11	18NOV02	04DEC02	
C11540	EPA/IDHW Comment Resolution Dft Final RA Rpt	11	05DEC02	19DEC02	
C11550	OU 3-13 Group 1 RA Rpt. Becomes Final - Sent	0		19DEC02	E4
C11570	Group 1 TFIA - O&M - FY02	250	01OCT01	30SEP02	
C11580	Group 1 TFIA - O&M - FY03	250	01OCT02	30SEP03	
C11590	TFIA Project Management - FY01	249	02OCT00	28SEP01	
C11600	TFIA Project Management - FY02	250	01OCT01	30SEP02	

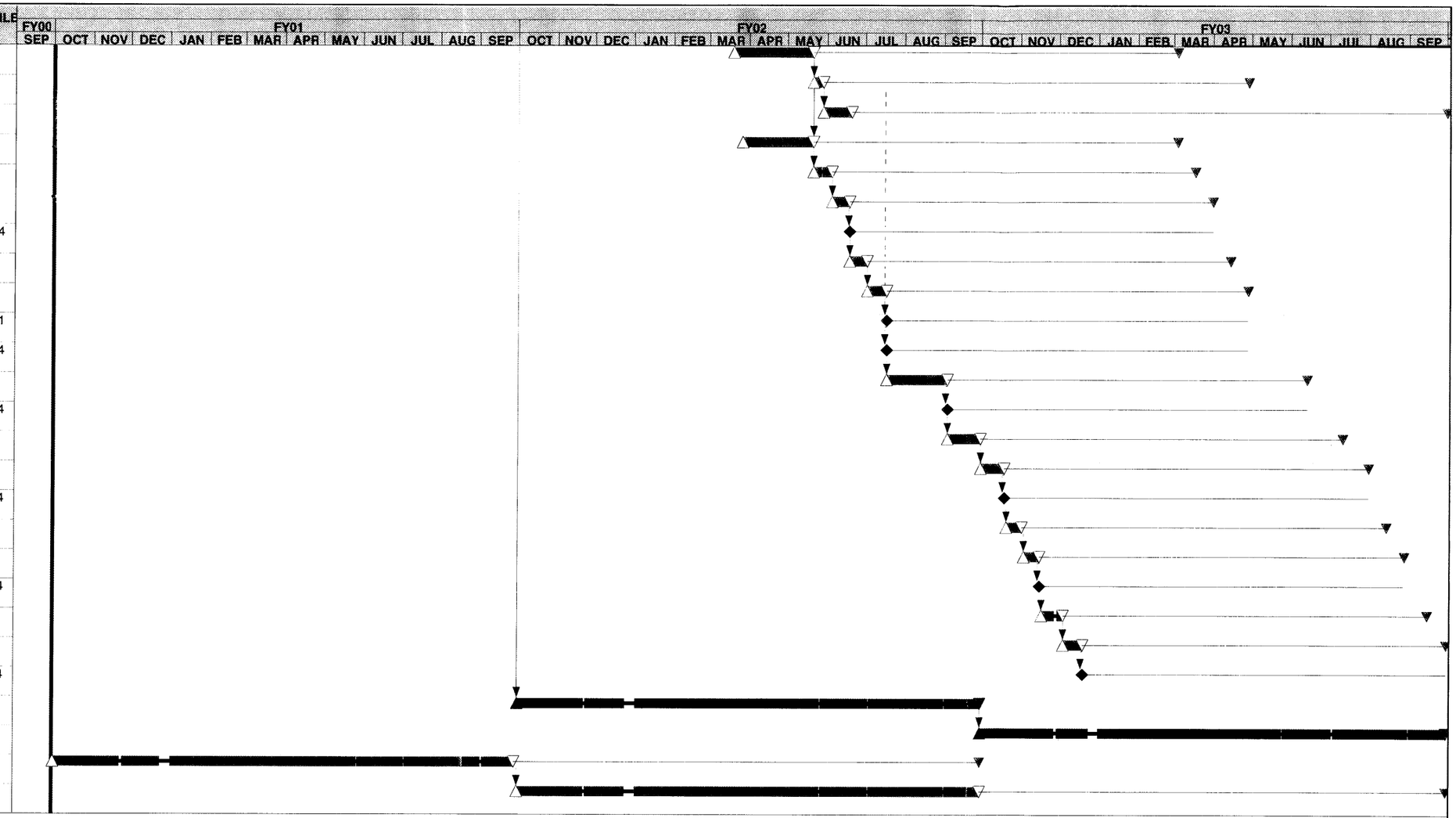

Start Date	01OCT00
Finish Date	30SEP03
Data Date	01OCT00
Run Date	03AUG00 15:13

Early Bar
Float Bar
Progress Bar
Critical Activity

© Primavera Systems, Inc.

WAG3 - 0601
LT-A0 (All)

Sheet 2 of 2

Bechtel BWXT Idaho, LLC

OU 3-13 Grp I Tank Farm Interim Act

WAG3/Groups

Date	Revision	Checked	Approved

This is a working schedule and does not establish enforceable milestones

Appendix I

Storm Water Pollution Prevention Plan

450.16
03/15/2000
Rev. 02

STORM WATER POLLUTION PREVENTION PLAN FOR CONSTRUCTION ACTIVITIES (SWPPP-CA) LONG-FORM PROJECT

PROJECT TITLE: OU3-13 Group 1 Tank Farm Interim Action Phase 1 and 2

Facility or Location: INTEC Environmental Checklist No.: INTEC-99-028

Project Description:

The Waste Area Group 3, Operable Unit 3-13 Record of Decision (ROD) for the Group 1 - Tank Farm Interim Action requires installation of engineering controls to reduce water infiltrating into the contaminated tank farm soils. This Interim Action includes upgrading the existing storm water runoff collection system in the tank farm including a 150-ft drainage control zone around the tank farm and constructing a lined evaporation pond where storm water runoff from the INTEC facility will be collected. The ROD requires the storm water collection system to accommodate a 25-year, 24-hour storm event. Also included in this action is the construction of concrete lined drainage ditches, installing culverts, a lift station and associated piping, drop inlets, manholes, regrading for drainage, installing a polyurea coating in the tank farm area and 150-ft buffer zone surrounding it. See attached 3 drawings for layout and reference.

Project Construction Date/Duration: 10/9/00, Approximately 1 year duration

Area of Site to be disturbed: Approximately 20 acres

Standard requirements:

- ☒ Post SWPPP-CA notice near main entrance of construction site.
- ☒ Spill prevention measures and prompt cleanup of any liquid or dry material spills.
- ☒ Minimize offsite tracking of sediments from vehicles.
- ☒ Minimize area of disturbance and preserve vegetation.
- ☒ Good Housekeeping procedures:
  - ☒ Proper and orderly storage of chemicals, pesticides, fertilizers, fuel, and other hazardous materials.
  - ☒ Proper and regular disposal of sanitary, construction, and hazardous wastes.
- ☒ Fugitive dust control measures.
- ☒ Perform inspections monthly, after storms, and prior to project close-out.
- ☒ Attach a site map which indicates drainage patterns, discharge locations, potential pollution sources (equipment and material storage areas including soil piles), areas of soil disturbance, erosion and sediment controls, storm water control measures, and stabilization practices.

Erosion and Sediment Controls: (Describe controls to divert storm water from exposed soil and retain sediments on site, such as diversion structures, silt fences, and sediment basins. Identify the entities responsible for implementation and maintenance.)

The construction site has a relatively flat terrain and excavated material is expected to be gravelly. The areas of disturbance gradually drain into existing ditches (inside INTEC). Existing sediment controls are adequate for storm water that flows inside INTEC. Each of the ditches identified on the attached map will be lined with concrete. The area where the evaporation pond will be constructed is relatively flat and contains gravelly soils. The buffer zone of native vegetation will be maintained. Therefore, no sediment controls will be required for the evaporation pond construction.

STORM WATER POLLUTION PREVENTION PLAN FOR CONSTRUCTION ACTIVITIES (SWPPP-CA) LONG-FORM PROJECT

Sequence: (Describe the sequence of major activities, control measure implementation, and control measure removal.)

Sequence may consist of: construction of the lined ditches and installing new culverts, regrading areas, constructing evaporation pond, and coating areas with polyurea. No clearing is required for the construction of the lined ditches and areas to be regraded because these areas are covered with gravel. Topsoil cleared for the construction of the evaporation pond will be stockpiled on-site for use in outer berm construction to promote re-vegetation. Topsoil stockpiles will be covered to prevent erosion. Clean excavated material will be used inside INTEC as needed. Excess excavated material will be removed from the construction site for other use. Final stabilization will be achieved.

Runoff Coefficient and Storm Water Management: (Calculate runoff coefficients and explain the technical basis for permanent storm water management measures if the coefficient after construction is greater than before.)

The runoff coefficient will increase due to the installation of impervious materials. The new concrete lined ditches and lift station were designed to adequately carry the added volume. The ditches were sized to carry peak flow from a 25-year storm event and the evaporation pond was sized to accommodate the runoff from a 25-year, 24-hour storm event (see EDF-1387, "Drainage Ditch Capacity Verification at INTEC" and EDF-1385, "Evaporation Pond Sizing Design" for reference).

Final Stabilization: (Identify soil stabilization measures and describe scheduling. Identify the entities responsible for implementation and maintenance.)

Final stabilization includes compacted, regraded soils covered with an impermeable polyurea coating, concrete lined ditches, asphalt pavement, gravel covered trenches and a lined evaporation pond with re-vegetated cover.

Industrial Activities: (Identify industrial sources of pollutants such as asphalt and concrete plants and describe pollution prevention measures.)

None.

Allowable Non-Storm Water Discharge: (Identify type of discharge and describe pollution prevention measures.)

None.

Material Inventory: (Identify construction materials and wastes.)

Construction materials: Materials such as concrete, plant mix pavement, geomembrane lining, polyurea coating, and gravels may be used on this project.

Construction waste: Wastes such as removal of asphalt, concrete, soil and other general construction debris may be generated. All wastes will be managed under the Waste Management plan in the project Remedial Design/Remedial Action (RD/RA) Work Plan.

Endangered Species: (Identify listed species or critical habitat in proximity to the construction activity. Describe any adverse impact and mitigative measures.)

No impact to endangered species identified in the completed project Ecological Assessment.

I have evaluated and identified controls adequate to meet the requirements of the INEEL Storm Water Pollution Prevention Plan for Construction Activities.

Project Manager _____ 3/23/00

450.16
03/15/2000
Rev. 02

STORM WATER POLLUTION PREVENTION PLAN FOR CONSTRUCTION ACTIVITIES (SWPPP-CA) LONG-FORM PROJECT

Signature: R. L. Davison — Date: 3/23/00

Name (Please Print) — Phone Number

I am in agreement with the provisions set forth in this plan.

INEEL SWPPP Coordinator: M Brown — Date: 3.27.00

CERTIFICATION:

I certify under penalty of law that this document and all attachments were prepared under my direction or supervision in accordance with a system designed to assure that qualified personnel properly gathered and evaluated the information submitted. Based upon my inquiry of the person or persons who manage the system or those persons directly responsible for gathering the information, the information submitted is, to the best of my knowledge and belief, true, accurate, and complete. I am aware that there are significant penalties for submitting false information, including the possibility of fine and imprisonment for knowing violations.

Signature: Richard S Wattins — Date: 4/11/00

Title: ESH&QA General Manager
For: Idaho National Engineering and Environmental Laboratory
Reference: Transfer Signature Authority Letter – PHD-34-00

Signature: Susan Perkins — Date: 6/8/2000

Title: Environmental Programs and Settlement Agreement Manager
For: DOE-Idaho Operations Office
Reference: Transfer Signature Authority Letter – OPE-EP&SA-98-091

Worksheet must be appended to the Generic Plan or Facility SWPPP-CA.

3/23/00

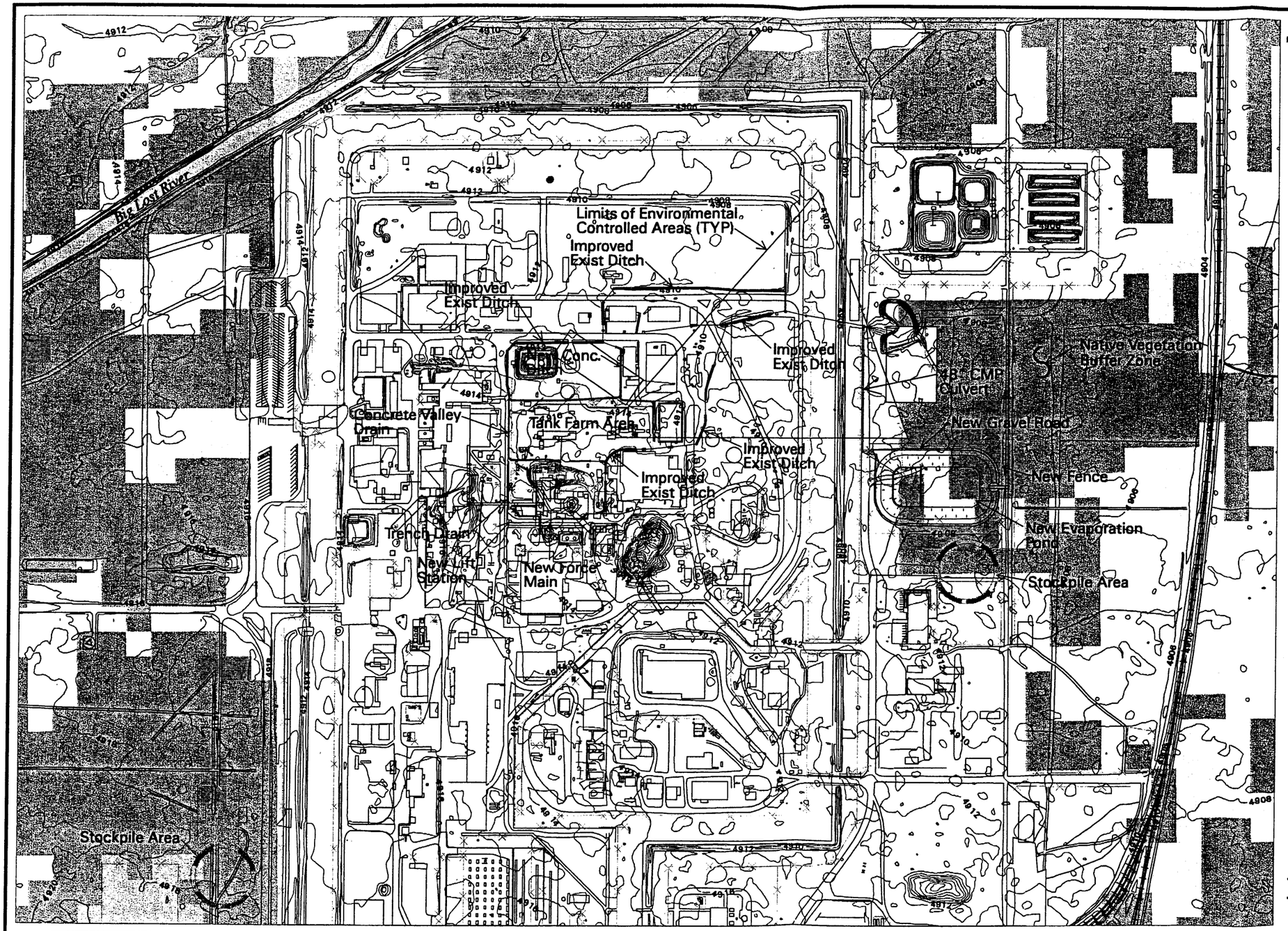

Tank Farm Interim Action Phase 1 & 2

Storm Water Pollution Prevention Plan for Industrial Activities

N W E S

LEGEND

- Roads and Buildings
- Railroad Tracks
- Fences
- Big Lost River System Tributary Channels
- 2 ft. Contours
- New Ditch Improvements
- New Evaporation Pond
- Stockpile Areas
- Big Lost River
- CERCLA Sites and ECAs
- Basin Wildrye
- Steppe
- Grassland
- Sagebrush–Steppe Off Lava
- Sagebrush–Steppe On Lava
- Sagebrush/Winterfat

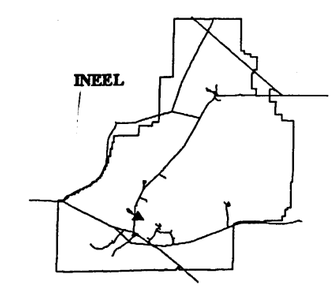

▲ Vicinity Map

0 300 600 900 Feet

Date Drawn : March 23, 2000

INEEL SPATIAL ANALYSIS LABORATORY

APPLYING TECHNOLOGY TO MEET ENVIRONMENTAL NEEDS

(/projects/cpp/tank_farm_maps: tf_new_ditches_evap_pond-bl_v1.aml)

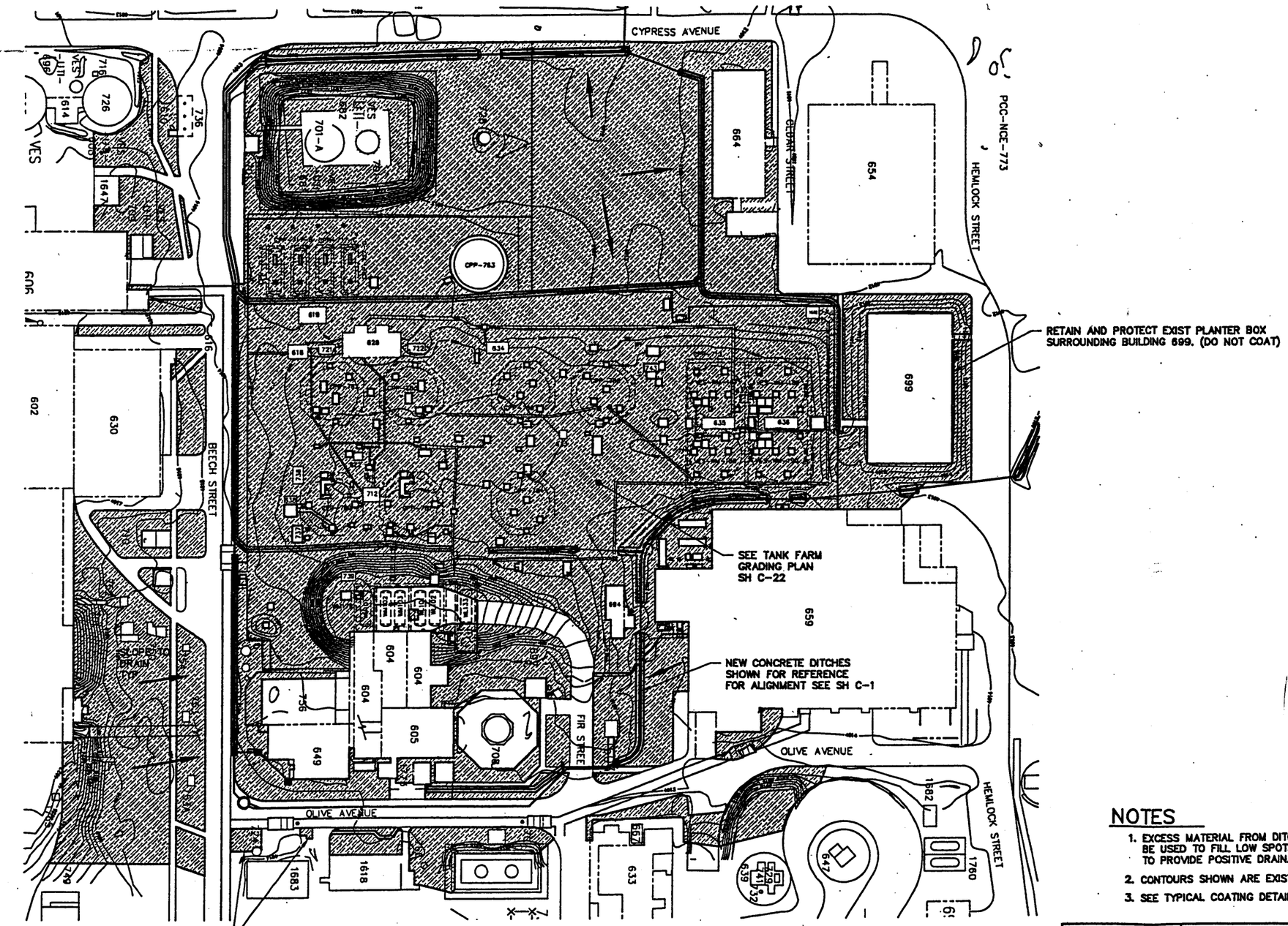

RETAIN AND PROTECT EXIST PLANTER BOX SURROUNDING BUILDING 699. (DO NOT COAT)

SEE TANK FARM GRADING PLAN SH C-22

NEW CONCRETE DITCHES SHOWN FOR REFERENCE FOR ALIGNMENT SEE SH C-1

APPLY 4" THK ASPHALT CONCRETE & 4" CRUSHED GRAVEL TO GRAVEL SECTIONS, SEE TYP ASPHALT PAVEMENT REPAIR DETAIL SH C-38

POLYUREA COATING AND GRADE PLAN

SCALE: 1"=50.0'

NOTES

1. EXCESS MATERIAL FROM DITCH AND EVAPORATION POND CONSTRUCTION SHALL BE USED TO FILL LOW SPOTS. COMPACT AND GRADE TO DRAIN. THE INTENT IS TO PROVIDE POSITIVE DRAINAGE TO NEW CONCRETE DITCHES.
2. CONTOURS SHOWN ARE EXISTING.
3. SEE TYPICAL COATING DETAILS SH C-38.

FOR DRAWING INDEX SEE DRAWING NO. T-2	SUBCONTRACT NO.	INEEL
SCALE: 1" = 50.0'	REQUESTER: R.L. DAVISON	INEEL OU3-13 GROUP 1 TANK FARM INTERIM ACTION PHASE 1 & 2 POLYUREA COATING AND GRADE PLAN
	DESIGN: KURT FRITZ	
	DRAWN: ROB HERGESHEIMER	
	PROJECT NO. 020978	
	SPEC CODE	
DESIGN PHASE: TITLE II	FOR REVIEW/APPROVAL SIGNATURES SEE DAR NO.	SIZE D · CAGE CODE · INDEX CODE NUMBER: AREA 200, TYPE 0100, CL 02, ORIG 090 · DWG- · REV
QUALITY LEVEL: 3	EFFECTIVE DATE:	SCALE: 1"=50.0' · SHEET C-25

REVISIONS

REV	DESCRIPTION	EFFECTIVE DATE:

28

File: C-025.DWG ID: RDH5 Layout Name: Layout1
Path: H:\OU3-13-TANKFARM\LATEST-RDHs: 03/21/00 - 09:54 A.M.

REVISIONS		
REV	DESCRIPTION	EFFECTIVE DATE:

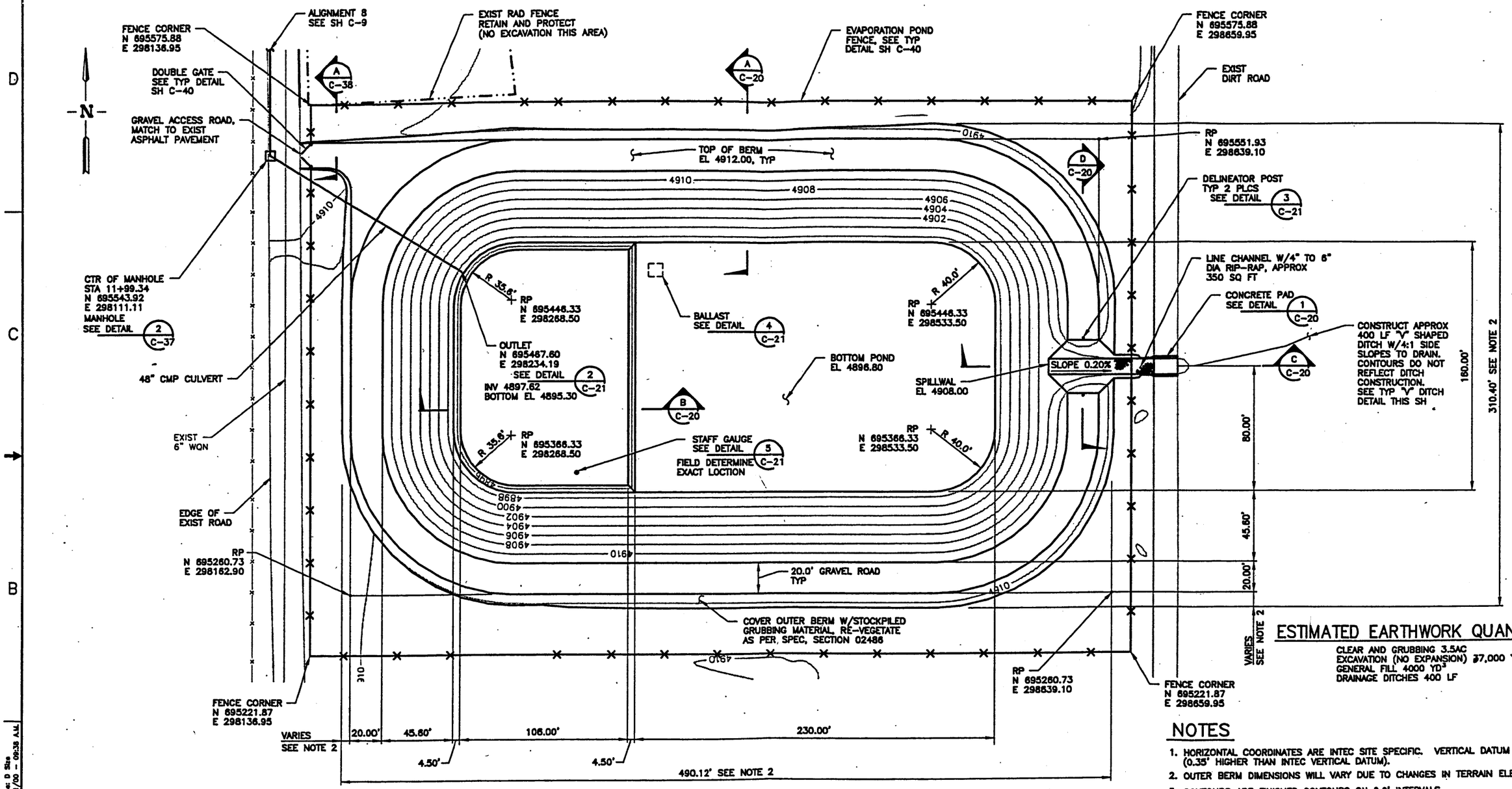

ESTIMATED EARTHWORK QUANTITIES

CLEAR AND GRUBBING 3.5AC
EXCAVATION (NO EXPANSION) 37,000 YD
GENERAL FILL 4000 YD^3
DRAINAGE DITCHES 400 LF

NOTES

1. HORIZONTAL COORDINATES ARE INTEC SITE SPECIFIC. VERTICAL DATUM IS NRTS (0.35' HIGHER THAN INTEC VERTICAL DATUM).
2. OUTER BERM DIMENSIONS WILL VARY DUE TO CHANGES IN TERRAIN ELEVATIONS.
3. CONTOURS ARE FINISHED CONTOURS ON 2.0' INTERVALS.
4. ESTIMATED QUANTITIES PERTAIN TO WORK THIS SHEET ONLY.

EVAPORATION POND

SCALE: 1"=30.0'

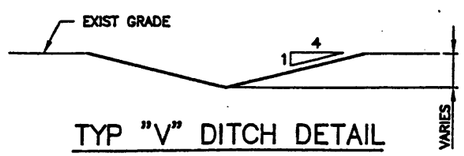

TYP "V" DITCH DETAIL

NTS

FOR DRAWING INDEX SEE DRAWING NO. T-2	SUBCONTRACT NO.	INEEL
SCALE: 1" = 30.0'	REQUESTER: R.L. DAVISON	INEEL OU3-13 GROUP 1 TANK FARM INTERIM ACTION PHASE 1 & 2 EVAPORATION POND
	DESIGN: KURT FRITZ	
	DRAWN: ROB HERGESHEIMER	
	PROJECT NO. 020978	
	SPEC CODE	SIZE D; CAGE CODE; INDEX CODE NUMBER AREA 200 TYPE 200 Q 65 ORG 090; DWG- ; REV
DESIGN PHASE: TITLE II	FOR REVIEW/APPROVAL SIGNATURES SEE DAR NO.	SHEET C-11
QUALITY LEVEL: 3	EFFECTIVE DATE:	SCALE: 1"=20.0'

3/23/00

File: C-011.DWG ID: RGH45 Layout Name: D Size
Path: H:\OU3-13-TANKFARM\LATEST-RGH\ut 03/21/00 - 09:38 A.M.

Appendix J

Detailed Cost Estimate

INEEL
Idaho National Engineering & Environmental Laboratory

INTEROFFICE MEMORANDUM

Date:	August 15, 2000		
To:	M. S. Kaptein	MS 3953	526-3115
From:	T. R. Mitchell TRM	MS 3655	526-3864
Subject:	TANK FARM INTERIM ACTION PHASE 1 & 2		

Per your request, Estimating Services has prepared the attached Title II Cost Estimate for the Tank Farm Interim Action Phase 1 & 2 Project. The Total Estimated Cost (TEC) for construction is $4,690,000.

Included for your use is the Cost Estimate Summary and Detail sheets with the cost breakdowns. Also included are the Cost Estimate Recapitulation sheets describing the basis and assumptions used in the development of this estimate.

The Estimate is based on previously prepared estimate 2956-C, along with updated versions of sheets C-25, and C-11 of the A-E Construction Plans and Specifications for the Tank Farm Interim Action Phase 1 & 2 Project. Any changes or revisions in the construction package should be reviewed by Estimating Services for impacts to the cost of the project.

If you have any questions or comments, please do not hesitate to contact me at 526-3864 or E-mail ID MITCTR.

Attachments

cc: Estimate File 2956-D
T. R. Mitchell Letter Files (TRM-13-00)

Project Name:
TANK FARM INTERIM ACTION PHASE 1 & 2
Project Location: ***INTEC***
Project Number: ***2956-D***

TEC Summary Report

ESTIMATE ELEMENT	Estimate Subtotal	Escalation	Contingency	TOTAL
		3.40%	*13.94%*	
Total Estimated Cost (TEC)	**$3,985,108**	**$135,320**	**$574,489**	**$4,694,917**
		3.40%	*13.94%*	
Total Estimated Cost (TEC)	**$3,985,108**	**$135,320**	**$574,489**	**$4,694,917**
Rounded TEC (Rounded to the nearest $ 10000)				**$4,690,000**

		Remarks
Type of Estimate:	TITLE II	
Estimator:	T. R. MITCHELL	
Checked By:		
Approved By:		

INEEL

Bechtel BWXT Idaho, LLC

COST ESTIMATE SUPPORT DATA RECAPITULATION

Project Title: Tank Farm Interim Action Phase 1 & 2
Estimator: T. R. Mitchell
Date: August 15, 2000
Estimate Type: Title II
File: 2956-D
Approved By:

I. **SCOPE OF WORK:** *Brief description of the proposed project.*

The scope of work for this project is to control INTEC Tank Farm surface water infiltration. This will be accomplished by paving certain areas with asphalt, installing a Poly Urea spray on coating in other designated areas, and constructing a concrete ditch system for transporting water into an evaporation pond that will be constructed outside the Tank Farm area. The work includes installation of a lift station, piping, and an HDPE membrane liner for the evaporation pond.

II. **BASIS OF THE ESTIMATE:** *Drawings, Design Report, Engineers Notes and/or other documentation upon which the estimate is originated.*

This estimate is based on a previously prepared estimate 2956-C, along with updated versions of sheets C-25, and C-11 of the A-E Construction Specifications and drawings for the OU3-13, Group 1, Tank Farm Interim Action Phase 1 & 2 Project.

III. **ASSUMPTIONS:** *Conditions statements accepted or supposed true without proof of demonstration. An assumption has a direct impact on total estimated cost.*

A. This project will be awarded to a subcontractor through the competitive bidding process.

B. Assume the Poly Urea spray on material will be sprayed to a thickness of 125 mil.

C. Assume the geotextile fabric will be placed up to the edge of all buildings and penetrations.

D. The spray on will be sprayed at least 1 foot up the penetration or building walls.

E. Assume there will be seven hours of productivity per day for the work being done inside the Tank Farm Fence.

F. Assume all work within the Tank Farm will not be affected by the load restrictions in the area.

G. Level C PPEs will need to be worn for work being done inside the Tank Farm Fence.

H. Stockpiles for excavated soil will need to be maintained only for soil removed from inside the Tank Farm Fence.

I. Assume 5% of the soil removed for the lift station will need to be boxed and hauled away.

J. Assume boxes for contaminated soil will be a GFE item that will be issued at no cost to the project.

IV. **CONTINGENCY GUIDELINE IMPLEMENTATION:** *The percentage used for contingency as determined by the contingency allowance guidelines can be altered to reflect the type of construction and conditions that may impact the total estimated cost.*

A contingency analysis has been performed to assess project risks. The main risk that would effect the cost of this project is the application of the Poly Urea spray on coating, and due to the excavation and grading that will take place, Tank Farm area contaminated soil is another major risk to the project. These tasks cover a major portion of the cost of this project, therefore contingency has been calculated to be 14%.

V. **OTHER COMMENTS/CONCERNS SPECIFIC TO THE ESTIMATE:**

A. This estimate includes the costs for training all of the anticipated workers. It is possible that some of the workers will already have been trained, and these costs could be reduced.

B. Costs for procurement and BBWI G&A allowance have been identified in the detail sheets of the construction estimate.

C. Costs for a full-time non-working supervisor have been included for a 20 week construction schedule.

Project Name:
TANK FARM INTERIM ACTION PHASE 1 & 2
Project Location: ***INTEC***
Estimate Number: ***2956-D***

Project Summary Report

Client: ***M. S. KAPTEIN***
Prepared By: ***T. R. MITCHELL***
Estimate Type: ***TITLE II***

LEVEL		Estimate Subtotal	Escalation	Contingency	Contingency %	TOTAL
9000	**CONSTRUCTION**	**$3,888,518**	**$135,320**	**$574,489**	**14.28%**	**$4,598,327**
9100	**--CONSTRUCTION SUBCONTRACTS**	**$3,888,518**	**$135,320**	**$574,489**	**14.28%**	**$4,598,327**
9101	**----GENERAL CONDITIONS**	**$192,690**	**$6,706**	**$23,927**	**12.00%**	**$223,323**
9101.1	------GENERAL CONDITIONS	$117,009	$4,072	$14,530	12.00%	$135,610
9101.1.1	--------GENERAL CONDITIONS MECHANICAL	$8,003	$279	$994	12.00%	$9,275
9101.1.2	--------GENERAL CONDITIONS ELECTRICAL	$7,238	$252	$899	12.00%	$8,388
9101.1.3	--------GENERAL CONDITIONS - GENERAL CONTRACTOR	$101,768	$3,542	$12,637	12.00%	$117,947
9101.2	------GC - CONDUCT OF OPERATIONS/CONDUCT OF MAINTENANCE	$75,681	$2,634	$9,398	12.00%	$87,713
9102	**----SITEWORK**	**$1,979,433**	**$68,884**	**$294,108**	**14.36%**	**$2,342,425**
9102.7	------DEMO FOR DITCHES	$13,080	$455	$1,624	12.00%	$15,160
9102.4	------EXC. & FILL FOR DITCH STRUCTURES	$514,134	$17,892	$106,405	20.00%	$638,431
9102.8	------SITEWORK FOR POLY UREA PREPARATION	$228,659	$7,957	$35,492	15.00%	$272,109
9102.5	------INSTALL PIPES	$103,374	$3,597	$12,837	12.00%	$119,808
9102.6	------ASPHALT REPAIR	$9,447	$329	$1,173	12.00%	$10,948
9102.3	------POND LINERS	$359,148	$12,498	$44,598	12.00%	$416,244
9102.1	------CHAIN LINK FENCING	$61,951	$2,156	$6,411	10.00%	$70,517
9102.2	------REVEGETATION	$3,329	$116	$344	10.00%	$3,789
	------ASPHALT PAVING OF TANK FARM PERIMETER AREAS	$686,311	$23,884	$85,223	12.00%	$795,418
9103	**----CONCRETE**	**$250,097**	**$8,703**	**$31,056**	**12.00%**	**$289,856**
9103.01	------CONC. FOR DITCH STRUCTURES	$207,937	$7,236	$25,821	12.00%	$240,994
9103.02	------PRECAST CONC FOR DITCHES	$41,220	$1,434	$5,118	12.00%	$47,773
9103.3	------CONCRETE PAD AT SPILLWAY	$941	$33	$117	12.00%	$1,090

Project Name:
TANK FARM INTERIM ACTION PHASE 1 & 2
Project Location: ***INTEC***
Estimate Number: ***2956-D***

Project Summary Report

Client: ***M. S. KAPTEIN***
Prepared By: ***T. R. MITCHELL***
Estimate Type: ***TITLE II***

LEVEL		Estimate Subtotal	Escalation	Contingency	Contingency %	TOTAL
9105	**----METALS**	**$2,358**	**$82**	**$293**	**12.00%**	**$2,733**
9105.01	------MISC METALS	$2,358	$82	$293	12.00%	$2,733
9109	**----FINISHES**	**$1,395,396**	**$48,560**	**$216,593**	**15.00%**	**$1,660,550**
9109.1	------POLY UREA SPRAY-ON COATING	$1,395,396	$48,560	$216,593	15.00%	$1,660,550
9115	**----MECHANICAL**	**$26,447**	**$920**	**$3,284**	**12.00%**	**$30,652**
9115.1	------INSTALL PUMPS IN LIFTSTATION	$26,447	$920	$3,284	12.00%	$30,652
9116	**----ELECTRICAL**	**$42,096**	**$1,465**	**$5,227**	**12.00%**	**$48,788**
9116.1	------SWITCHGEAR and DEVICES	$5,521	$192	$686	12.00%	$6,399
9116.2	------RACEWAYS AND ENCLOSURES	$6,473	$225	$804	12.00%	$7,502
9116.3	------CONDUCTORS AND GROUNDING	$7,585	$264	$942	12.00%	$8,791
9116.4	------DUCTBANK	$7,247	$252	$900	12.00%	$8,399
9116.5	------TESTING	$611	$21	$76	12.00%	$708
9116.6	------REPAIR CATHODIC PROTECTION	$14,659	$510	$1,820	12.00%	$16,989
GAPIF	**Non-Org G&A and PIF**	**$96,590**	**$0**	**$0**	**0.00%**	**$96,590**
Total	**TEC (TOTAL ESTIMATED COST)**	**$3,985,108**	**$135,320**	**$574,489**	**13.94%**	**$4,694,917**

Project Name:
TANK FARM INTERIM ACTION PHASE 1 & 2
Project Location: ***INTEC***
Estimate Number: ***2956-D***

CONSTRUCTION DETAIL ITEM REPORT

Client: ***M. S. KAPTEIN***
Prepared By: ***T. R. MITCHELL***
Estimate Type: ***TITLE II***

LEVEL	Org/Subcontractor	QTY		Hrs	Crew/Rate	Labor	Const Eqp	Matl	S/C	Other	TOTAL
--- 9101.1.1 GENERAL CONDITIONS MECHANICAL											
	PIPE	U.C. per HRS		1	CN-PIPF	42.95	0	0	0	0	42.95
Supervision			80.00	80	$42.95	$3,436	$0	$0	$0	$0	$3,436
	PIPE	U.C. per Men		24	CN-PIPE	943.92	0	0	0	0	943.92
Training			2.00	48	$39.33	$1,888	$0	$0	$0	$0	$1,888
	PIPE	U.C. per Lot		8	CN-PIPE	314.64	0	0	0	0	314.64
Mobilization & Demobilization			1.00	8	$39.33	$315	$0	$0	$0	$0	$315
Subtotal						$5,638	$0	$0	$0	$0	$5,638
Sales Tax						$0	$0	$0	$0	$0	$0
INEEL ORG Labor/Subcontractor Overheads						$2,364	$0	$0	$0	$0	$2,364
Subtotal Estimate											**$8,003**
Escalation						$278	$0	$0	$0	$0	$278
Contingency						$994	$0	$0	$0	$0	$994
---Total 9101.1.1 GENERAL CONDITIONS MECHANICAL				**136**		**$9,275**	**$0**	**$0**	**$0**	**$0**	**$9,275**
--- 9101.1.2 GENERAL CONDITIONS ELECTRICAL											
	ELEC	U.C. per HRS		1	CN-ELCF	38.62	0	0	0	0	38.62
Supervision			80.00	80	$38.62	$3,090	$0	$0	$0	$0	$3,090
	ELEC	U.C. per Men		24	CN-ELEC	861.36	0	0	0	0	861.36
Training			2.00	48	$35.89	$1,723	$0	$0	$0	$0	$1,723
	ELEC	U.C. per Lot		8	CN-ELEC	287.12	0	0	0	0	287.12
Mobilization & Demobilization			1.00	8	$35.89	$287	$0	$0	$0	$0	$287
Subtotal						$5,099	$0	$0	$0	$0	$5,099
Sales Tax						$0	$0	$0	$0	$0	$0
INEEL ORG Labor/Subcontractor Overheads						$2,138	$0	$0	$0	$0	$2,138
Subtotal Estimate											**$7,238**
Escalation						$252	$0	$0	$0	$0	$252
Contingency						$899	$0	$0	$0	$0	$899
---Total 9101.1.2 GENERAL CONDITIONS ELECTRICAL				**136**		**$8,388**	**$0**	**$0**	**$0**	**$0**	**$8,388**
--- 9101.1.3 GENERAL CONDITIONS - GENERAL CONTRACTOR											
	GEN	U.C. per Wk		40	CN-SUPR	1600	0	0	0	0	1600
Supervision			20.00	800	$40.00	$32,000	$0	$0	$0	$0	$32,000
	GEN	U.C. per Men		24	CN-LABR	757.92	0	0	0	0	757.92
Training For Tank Farm			8.00	192	$31.58	$6,063	$0	$0	$0	$0	$6,063
	GEN	U.C. per Men		8	CN-LABR	252.64	0	0	0	0	252.64
Training For Remainder of Crew			7.00	56	$31.58	$1,768	$0	$0	$0	$0	$1,768
	GEN	U.C. per Lot			CN-LABR	0	0	0	0	20000	20000
Mobilization & Demobilization			1.00	0		$0	$0	$0	$0	$20,000	$20,000

Project Name:
TANK FARM INTERIM ACTION PHASE 1 & 2
Project Location: ***INTEC***
Estimate Number: ***2956-D***

CONSTRUCTION DETAIL ITEM REPORT

Client: ***M. S. KAPTEIN***
Prepared By: ***T. R. MITCHELL***
Estimate Type: ***TITLE II***

LEVEL	Org/Subcontractor	QTY		Hrs	Crew/Rate	Labor	Const Eqp	Matl	S/C	Other	TOTAL
--- **9101.1.3 GENERAL CONDITIONS - GENERAL CONTRACTOR**											
	GEN	U.C. per Ea		20	CN-LABR	631.6	0	0	0	0	631.6
Misc. Outages			6.00	120	$31.58	$3,790	$0	$0	$0	$0	$3,790
	GEN	U.C. per lot				0	0	0	19750	0	19750
Allowance for Hand Tools and Consumables at (3% of Labor)			1.00	0		$0	$0	$0	$19,750	$0	$19,750
Subtotal						$43,621	$0	$0	$19,750	$20,000	$83,371
Sales Tax						$0	$0	$0	$0	$0	$0
INEEL ORG Labor/Subcontractor Overheads						$12,663	$0	$0	$5,733	$0	$18,397
Subtotal Estimate											**$101,768**
Escalation						$1,959	$0	$0	$887	$696	$3,542
Contingency						$6,989	$0	$0	$3,164	$2,484	$12,637
---Total 9101.1.3 GENERAL CONDITIONS - GENERAL CONTRACTOR				**1,168**		**$65,233**	**$0**	**$0**	**$29,535**	**$23,180**	**$117,947**
--- **9101.2 GC - CONDUCT OF OPERATIONS/CONDUCT OF MAINTENANCE**											
	GEN	U.C. per Wk		20	CN-SUPR	800	0	0	0	0	800
Added Supervision			20.00	400	$40.00	$16,000	$0	$0	$0	$0	$16,000
	GEN	U.C. per Men		4	CN-LABR	126.32	0	0	0	0	126.32
Additional Training			6.00	24	$31.58	$758	$0	$0	$0	$0	$758
	GEN	U.C. per Hr		1	CN-LABR	31.58	0	0	0	0	31.58
Labor Impact - 10%			1,200.00	1,200	$31.58	$37,896	$0	$0	$0	$0	$37,896
	GEN	U.C. per Hr		10	CN-SUPR	400	0	0	0	0	400
Post Job Review			10.00	100	$40.00	$4,000	$0	$0	$0	$0	$4,000
Subtotal						$58,654	$0	$0	$0	$0	$58,654
Sales Tax						$0	$0	$0	$0	$0	$0
INEEL ORG Labor/Subcontractor Overheads						$17,027	$0	$0	$0	$0	$17,027
Subtotal Estimate											**$75,681**
Escalation						$2,634	$0	$0	$0	$0	$2,634
Contingency						$9,398	$0	$0	$0	$0	$9,398
---Total 9101.2 GC - CONDUCT OF OPERATIONS/CONDUCT OF MAINTENANCE				**1,724**		**$87,713**	**$0**	**$0**	**$0**	**$0**	**$87,713**
--- **9102.7 DEMO FOR DITCHES**											
	CONC	U.C. per Hr		2	CN-LABR	63.16	0	0	0	0	63.16
Demo dry well near CPP-649 (labors)			20.00	40	$31.58	$1,263	$0	$0	$0	$0	$1,263
	CONC	U.C. per Hr		1	CN-EQLT	33.91	30	0	0	0	63.91
Demo dry well near CPP-649 (hoe)			20.00	20	$33.91	$678	$600	$0	$0	$0	$1,278
	CONC	U.C. per hr		3	CN-LABR	94.74	0	0	0	0	94.74
Remove catch basin near CPP-649 (labors)			30.00	90	$31.58	$2,842	$0	$0	$0	$0	$2,842

Project Name:
TANK FARM INTERIM ACTION PHASE 1 & 2
Project Location: ***INTEC***
Estimate Number: ***2956-D***

CONSTRUCTION DETAIL ITEM REPORT

Client: ***M. S. KAPTEIN***
Prepared By: ***T. R. MITCHELL***
Estimate Type: ***TITLE II***

LEVEL	Org/Subcontractor	QTY	Hrs	Crew/Rate	Labor	Const Eqp	Matl	S/C	Other	TOTAL
--- **9102.7 DEMO FOR DITCHES**										
	CONC	U.C. per hr	1	CN-EQLT	33.91	30	0	0	0	63.91
Remove catch basin near CPP-649 (hoe)		30.00	30	$33.91	$1,017	$900	$0	$0	$0	$1,917
	CONC	U.C. per hr	2	CN-LABR	63.16	0	0	0	0	63.16
Remove 12" CMP near CPP-649 (labors)		10.00	20	$31.58	$632	$0	$0	$0	$0	$632
	CONC	U.C. per hr	1	CN-EQLT	33.91	30	0	0	0	63.91
Remove 12"CMP near CPP-649 (hoe)		10.00	10	$33.91	$339	$300	$0	$0	$0	$639
	CONC	U.C. per hr	1	CN-TRLT	32.42	32	0	0	0	64.42
Haul material to bulky waste		10.00	10	$32.42	$324	$320	$0	$0	$0	$644
Subtotal					$7,096	$2,120	$0	$0	$0	$9,216
Sales Tax					$0	$0	$0	$0	$0	$0
INEEL ORG Labor/Subcontractor Overheads					$2,975	$889	$0	$0	$0	$3,864
Subtotal Estimate										**$13,080**
Escalation					$350	$105	$0	$0	$0	$455
Contingency					$1,251	$374	$0	$0	$0	$1,624
---Total 9102.7 DEMO FOR DITCHES			**220**		**$11,672**	**$3,487**	**$0**	**$0**	**$0**	**$15,160**
--- **9102.4 EXC. & FILL FOR DITCH STRUCTURES**										
Memo:	***Unit prices were developed with another program and transfered to success.***									
	GEN	U.C. per cy			18.75	14.9	0	0	0	33.65
Excavate for lift station Memo: Inside Tank Farm		1,270.00	0		$23,813	$18,923	$0	$0	$0	$42,736
	GEN	U.C. per cy			8.34	3.77	0	0	0	12.11
Backfill lift station		1,270.00	0		$10,592	$4,788	$0	$0	$0	$15,380
	GEN	U.C. per cy	8	CN-LABR	252.64	0	0	0	0	252.64
Boxing Contaminated Dirt from Lift Station (5% of total)		64.00	512	$31.58	$16,169	$0	$0	$0	$0	$16,169
	GEN	U.C. per sf			0	0	0	0.1	0	0.1
Maintain Excavated Soil from Lift Station Area		20,000.00	0		$0	$0	$0	$2,000	$0	$2,000
	GEN	U.C. per cy			8.63	1.96	0	0	0	10.59
Excavation for ditches		1,170.00	0		$10,097	$2,293	$0	$0	$0	$12,390
	GEN	U.C. per cy			18.75	14.96	0	0	0	33.71
Excavation for pipes inside Tank Farm Fence		2,100.00	0		$39,375	$31,416	$0	$0	$0	$70,791
	GEN	U.C. per cy			8.34	3.77	0	0	0	12.11
Backfill pipes inside Tank Farm Fence		2,100.00	0		$17,514	$7,917	$0	$0	$0	$25,431
	GEN	U.C. per cy			1.85	1.5	0	0	0	3.35
Excavation for 48" CMP Outside Tank Farm Fence		11,130.00	0		$20,591	$16,695	$0	$0	$0	$37,286
	GEN	U.C. per cy			4.46	1.82	0	0	0	6.28
Backfill 48" CMP Outside Tank Farm Fence		11,130.00	0		$49,640	$20,257	$0	$0	$0	$69,896

Project Name:
TANK FARM INTERIM ACTION PHASE 1 & 2
Project Location: ***INTEC***
Estimate Number: ***2956-D***

CONSTRUCTION DETAIL ITEM REPORT

Client: ***M. S. KAPTEIN***
Prepared By: ***T. R. MITCHELL***
Estimate Type: ***TITLE II***

LEVEL	Org/Subcontractor	QTY	Hrs	Crew/Rate	Labor	Const Eqp	Matl	S/C	Other	TOTAL
--- **9102.4 EXC. & FILL FOR DITCH STRUCTURES**										
Memo:	***Unit prices were developed with another program and transfered to success.***									
GEN	U.C. per Ea		40	CN-LABR	1263.2	0	0	0	0	1263.2
Hand Excavate under utility tunnel		1.00	40	$31.58	$1,263	$0	$0	$0	$0	$1,263
GEN	U.C. per Ea		20	CN-LABR	631.6	300	0	0	0	931.6
Temp supports for utilities		3.00	60	$31.58	$1,895	$900	$0	$0	$0	$2,795
GEN	U.C. per sf				0.009	0.006	0	0	0	0.014
Clear and Grub for Pond Excavation		210,600.00	0		$1,811	$1,200	$0	$0	$0	$3,012
Memo: Outside Tank Farm Fence										
GEN	U.C. per Cy				0.69	1.12	0	0	0	1.81
Excavation for Evaporation Pond		52,000.00	0		$35,880	$58,240	$0	$0	$0	$94,120
GEN	U.C. per Cy				7.08	4.5	0	0	0	11.58
Excavate Small Trenches for HDPE Liner		255.00	0		$1,805	$1,148	$0	$0	$0	$2,953
GEN	U.C. per Cy				1.72	1.06	0	0	0	2.78
Backfill & Compact Trenches for HDPE Liner		255.00	0		$439	$270	$0	$0	$0	$709
GEN	U.C. per Ea				0	0	0	650	0	650
Telephone Pole for Staff Gauge		1.00	0		$0	$0	$0	$650	$0	$650
GEN	U.C. per Ea				0	0	0	635	0	635
Staff Gauge		1.00	0		$0	$0	$0	$635	$0	$635
GEN	U.C. per Cy				0.45	0.88	0	0	0	1.33
Excavate Drainage Ditch For Pond Overflow		185.00	0		$83	$163	$0	$0	$0	$246
Subtotal					$230,966	$164,210	$0	$3,285	$0	$398,461
Sales Tax					$0	$0	$0	$0	$0	$0
INEEL ORG Labor/Subcontractor Overheads					$67,049	$47,670	$0	$954	$0	$115,673
Subtotal Estimate										**$514,134**
Escalation					$10,371	$7,373	$0	$148	$0	$17,892
Contingency					$61,677	$43,851	$0	$877	$0	$106,405
---Total 9102.4 EXC. & FILL FOR DITCH STRUCTURES			**612**		**$370,064**	**$263,104**	**$0**	**$5,263**	**$0**	**$638,431**
--- **9102.8 SITEWORK FOR POLY UREA PREPARATION**										
GEN	U.C. per Ea		30	CN-IRON	1305	0	300	0	0	1605
Engineered Bridges at Duct Banks		5.00	150	$43.50	$6,525	$0	$1,500	$0	$0	$8,025
Memo: Inside Tank Farm										
GEN	U.C. per Ea		2	CN-IRON	87	0	0	0	0	87
Move Each Bridge 3 times		15.00	30	$43.50	$1,305	$0	$0	$0	$0	$1,305
GEN	U.C. per Ea		2	CN-IRON	87	0	0	0	0	87
Remove and Dispose of Bridges		5.00	10	$43.50	$435	$0	$0	$0	$0	$435

Project Name:
TANK FARM INTERIM ACTION PHASE 1 & 2
Project Location: ***INTEC***
Estimate Number: ***2956-D***

CONSTRUCTION DETAIL ITEM REPORT

Client: ***M. S. KAPTEIN***
Prepared By: ***T. R. MITCHELL***
Estimate Type: ***TITLE II***

LEVEL	Org/Subcontractor	QTY	Hrs	Crew/Rate	Labor	Const Eqp	Matl	S/C	Other	TOTAL
--- 9102.8 SITEWORK FOR POLY UREA PREPARATION										
	GEN	U.C. per SF	0.02	CN-LABR	0.632	0	0	0	0	0.632
Regrade Site w/Hand Labor and Equipment		180,000.00	3,600	$31.58	$113,688	$0	$0	$0	$0	$113,688
Memo: Inside Restricted Load Area										
	GEN	U.C. per SF	0.01	CN-LABR	0.316	0	0	0	0	0.316
Regrade Site w/Equipment		170,000.00	1,700	$31.58	$53,686	$0	$0	$0	$0	$53,686
Memo: Outside Restricted Load Area										
Subtotal					$175,639	$0	$1,500	$0	$0	$177,139
Sales Tax					$0	$0	$75	$0	$0	$75
INEEL ORG Labor/Subcontractor Overheads					$50,988	$0	$457	$0	$0	$51,445
Subtotal Estimate										**$228,659**
Escalation					$7,887	$0	$71	$0	$0	$7,957
Contingency					$35,177	$0	$315	$0	$0	$35,492
---Total 9102.8 SITEWORK FOR POLY UREA PREPARATION			**5,490**		**$269,691**	**$0**	**$2,418**	**$0**	**$0**	**$272,109**
--- 9102.5 INSTALL PIPES										
	PIPE	U.C. per lf	0.25	CN-PIPE	9.832	0	4.65	0	0	14.482
4" Galvanized		45.00	11	$39.33	$442	$0	$209	$0	$0	$652
	GEN	U.C. per lf	0.15	CN-LABR	4.737	0	2.45	0	0	7.187
8" PVC		370.00	56	$31.58	$1,753	$0	$907	$0	$0	$2,659
	GEN	U.C. per lf	0.2	CN-LABR	6.316	0	5.4	0	0	11.716
12" PVC		55.00	11	$31.58	$347	$0	$297	$0	$0	$644
	GEN	U.C. per lf	0.2	CN-LABR	6.316	0	12.4	0	0	18.716
12" CMP		50.00	10	$31.58	$316	$0	$620	$0	$0	$936
	GEN	U.C. per lf	0.24	CN-LABR	7.579	0	13.5	0	0	21.079
18" CMP		55.00	13	$31.58	$417	$0	$743	$0	$0	$1,159
	GEN	U.C. per lf	0.32	CN-LABR	10.106	0	25.5	0	0	35.606
24" CMP		65.00	21	$31.58	$657	$0	$1,658	$0	$0	$2,314
	GEN	U.C. per lf	0.42	CN-LABR	13.264	0	26.5	0	0	39.764
30" CMP		40.00	17	$31.58	$531	$0	$1,060	$0	$0	$1,591
	GEN	U.C. per lf	0.45	CN-LABR	14.211	0	47	0	0	61.211
32" CMP		55.00	25	$31.58	$782	$0	$2,585	$0	$0	$3,367
	GEN	U.C. per lf	0.45	CN-LABR	14.211	0	47	0	0	61.211
36" CMP		100.00	45	$31.58	$1,421	$0	$4,700	$0	$0	$6,121
	GEN	U.C. per lf	0.5	CN-LABR	15.79	0	62.5	0	0	78.29
48" CMP		640.00	320	$31.58	$10,106	$0	$40,000	$0	$0	$50,106

Project Name:
TANK FARM INTERIM ACTION PHASE 1 & 2
Project Location: ***INTEC***
Estimate Number: ***2956-D***

CONSTRUCTION DETAIL ITEM REPORT

Client: ***M. S. KAPTEIN***
Prepared By: ***T. R. MITCHELL***
Estimate Type: ***TITLE II***

LEVEL	Org/Subcontractor	QTY	Hrs	Crew/Rate	Labor	Const Eqp	Matl	S/C	Other	TOTAL
--- **9102.5 INSTALL PIPES**										
	GEN	U.C. per lf	0.35	CN-LABR	11.053	0	26	0	0	37.053
28x20" CMP		205.00	72	$31.58	$2,266	$0	$5,330	$0	$0	$7,596
Subtotal					$19,037	$0	$58,108	$0	$0	$77,145
Sales Tax					$0	$0	$2,905	$0	$0	$2,905
INEEL ORG Labor/Subcontractor Overheads					$5,583	$0	$17,740	$0	$0	$23,324
Subtotal Estimate										**$103,374**
Escalation					$857	$0	$2,741	$0	$0	$3,597
Contingency					$3,057	$0	$9,779	$0	$0	$12,837
---Total 9102.5 INSTALL PIPES			**600**		**$28,534**	**$0**	**$91,274**	**$0**	**$0**	**$119,808**
--- **9102.6 ASPHALT REPAIR**										
	PAVE	U.C. per Sf			2	1.5	1.5	0	0	5
Repair Asphalt roads		1,000.00	0		$2,000	$1,500	$1,500	$0	$0	$5,000
	PAVE	U.C. per Lf	0.055	CN-EQMD	1.911	1.25	0	0	0	3.161
Cut asphalt for removal		500.00	28	$34.75	$956	$625	$0	$0	$0	$1,581
Subtotal					$2,956	$2,125	$1,500	$0	$0	$6,581
Sales Tax					$0	$0	$75	$0	$0	$75
INEEL ORG Labor/Subcontractor Overheads					$1,239	$891	$660	$0	$0	$2,791
Subtotal Estimate										**$9,447**
Escalation					$146	$105	$78	$0	$0	$329
Contingency					$521	$375	$278	$0	$0	$1,173
---Total 9102.6 ASPHALT REPAIR			**28**		**$4,862**	**$3,496**	**$2,591**	**$0**	**$0**	**$10,948**
--- **9102.3 POND LINERS**										
	LINER	U.C. per sf			0	0	0	1.59	0	1.59
HDPE Membrane Liner (60 mil) w/Geotextile LIner		155,930.00	0		$0	$0	$0	$247,929	$0	$247,929
	LINER	U.C. per sf			0	0	0	1.59	0	1.59
HDPE Membrane Liner Overlap		11,400.00	0		$0	$0	$0	$18,126	$0	$18,126
	LINER	U.C. per sf			0	0	0	1.38	0	1.38
HDPE Membrane sections 2'x2' ballast pads (20 mil)		12,300.00	0		$0	$0	$0	$16,974	$0	$16,974
	LINER	U.C. per Ea			0	0	0	2	0	2
Concrete Bag Ballasts for Pond Liner		3,034.00	0		$0	$0	$0	$6,068	$0	$6,068
	LINER	U.C. per Ea			0	0	0	500	0	500
HDPE Membrane Boot 2 Locations		2.00	0		$0	$0	$0	$1,000	$0	$1,000

Project Name:
TANK FARM INTERIM ACTION PHASE 1 & 2
Project Location: ***INTEC***
Estimate Number: ***2956-D***

CONSTRUCTION DETAIL ITEM REPORT

Client: ***M. S. KAPTEIN***
Prepared By: ***T. R. MITCHELL***
Estimate Type: ***TITLE II***

LEVEL	Org/Subcontractor	QTY	Hrs	Crew/Rate	Labor	Const Eqp	Matl	S/C	Other	TOTAL
--- **9102.3 POND LINERS**										
	LINER	U.C. per ea			0	0	0	1500	0	1500
HDPE Rung Ladder System		20.00	0		$0	$0	$0	$30,000	$0	$30,000
Subtotal					$0	$0	$0	$320,097	$0	$320,097
Sales Tax					$0	$0	$0	$0	$0	$0
INEEL ORG Labor/Subcontractor Overheads					$0	$0	$0	$39,052	$0	$39,052
Subtotal Estimate										**$359,148**
Escalation					$0	$0	$0	$12,498	$0	$12,498
Contingency					$0	$0	$0	$44,598	$0	$44,598
---Total 9102.3 POND LINERS			**0**		**$0**	**$0**	**$0**	**$416,244**	**$0**	**$416,244**
--- **9102.1 CHAIN LINK FENCING**										
Memo:	***Outside Tank Farm***									
	FENCE	U.C. per Ea	0.19	CN-LABR	6	3.08	0	0	0	9.08
Auger Fence Post Holes		189.00	36	$31.58	$1,134	$582	$0	$0	$0	$1,716
	FENCE	U.C. per Ea	0.492	CN-LABR	15.537	8.85	89	0	0	113.387
Corner Posts 8' High		4.00	2	$31.58	$62	$35	$356	$0	$0	$454
	FENCE	U.C. per Ea	0.525	CN-LABR	16.58	8.85	100	0	0	125.43
End Gate Posts 8' High		2.00	1	$31.58	$33	$18	$200	$0	$0	$251
	FENCE	U.C. per Ea	0.464	CN-LABR	14.653	7.8	20.5	0	0	42.953
Line Posts 8' High		183.00	85	$31.58	$2,682	$1,427	$3,752	$0	$0	$7,860
	FENCE	U.C. per LF	0.026	CN-LABR	0.821	0.2	1.86	0	0	2.881
Top Rail		1,880.00	49	$31.58	$1,544	$376	$3,497	$0	$0	$5,416
	FENCE	U.C. per LF	0.105	CN-LABR	3.316	0.79	7	0	0	11.106
Mesh Fabric 8' High		1,880.00	197	$31.58	$6,234	$1,485	$13,160	$0	$0	$20,879
	FENCE	U.C. per LF	0.01	CN-LABR	0.316	0.08	0.1	0	0	0.496
Reinforcing Tension Wire		1,880.00	19	$31.58	$594	$150	$188	$0	$0	$932
	FENCE	U.C. per Ea	0.26	CN-LABR	8.211	0	18	0	0	26.211
Fence Braces		10.00	3	$31.58	$82	$0	$180	$0	$0	$262
	FENCE	U.C. per Ea	20	CN-LABR	631.6	250	750	0	0	1631.6
Double-Swing Gate 24'		2.00	40	$31.58	$1,263	$500	$1,500	$0	$0	$3,263

Project Name:
TANK FARM INTERIM ACTION PHASE 1 & 2
Project Location: ***INTEC***
Estimate Number: ***2956-D***

CONSTRUCTION DETAIL ITEM REPORT

Client: ***M. S. KAPTEIN***
Prepared By: ***T. R. MITCHELL***
Estimate Type: ***TITLE II***

LEVEL	Org/Subcontractor	QTY	Hrs	Crew/Rate	Labor	Const Eqp	Matl	S/C	Other	TOTAL
--- **9102.1 CHAIN LINK FENCING**										
Memo:	***Outside Tank Farm***									
	FENCE	U.C. per Lot	30	CN-LABR	947.4	0	500	0	0	1447.4
Grounding Wire		1.00	30	$31.58	$947	$0	$500	$0	$0	$1,447
Subtotal					$14,575	$4,574	$23,332	$0	$0	$42,481
Sales Tax					$0	$0	$1,167	$0	$0	$1,167
INEEL ORG Labor/Subcontractor Overheads					$6,112	$1,918	$10,273	$0	$0	$18,303
Subtotal Estimate										**$61,951**
Escalation					$720	$226	$1,210	$0	$0	$2,156
Contingency					$2,141	$672	$3,598	$0	$0	$6,411
---Total 9102.1 CHAIN LINK FENCING			**462**		**$23,547**	**$7,390**	**$39,580**	**$0**	**$0**	**$70,517**
--- **9102.2 REVEGETATION**										
	GEN	U.C. per sf			0	0	0	0.3	0	0.3
Revegetate Area Around Outside Perimeter of Pond		4,200.00	0		$0	$0	$0	$1,260	$0	$1,260
	GEN	U.C. per sf			0	0	0	0.3	0	0.3
Revegetate Drainage Ditch		4,400.00	0		$0	$0	$0	$1,320	$0	$1,320
Subtotal					$0	$0	$0	$2,580	$0	$2,580
Sales Tax					$0	$0	$0	$0	$0	$0
INEEL ORG Labor/Subcontractor Overheads					$0	$0	$0	$749	$0	$749
Subtotal Estimate										**$3,329**
Escalation					$0	$0	$0	$116	$0	$116
Contingency					$0	$0	$0	$344	$0	$344
---Total 9102.2 REVEGETATION			**0**		**$0**	**$0**	**$0**	**$3,789**	**$0**	**$3,789**
--- **ASPHALT PAVING OF TANK FARM PERIMETER AREAS**										
	PAVE	U.C. per sf			2	1.5	1.5	0	0	5
Asphalt Paving of Tank Farm Perimeter		95,280.00	0		$190,560	$142,920	$142,920	$0	$0	$476,400
Subtotal					$190,560	$142,920	$142,920	$0	$0	$476,400
Sales Tax					$0	$0	$7,146	$0	$0	$7,146
INEEL ORG Labor/Subcontractor Overheads					$79,908	$59,931	$62,927	$0	$0	$202,765
Subtotal Estimate										**$686,311**
Escalation					$9,412	$7,059	$7,412	$0	$0	$23,884
Contingency					$33,586	$25,189	$26,449	$0	$0	$85,223
---Total ASPHALT PAVING OF TANK FARM PERIMETER AREAS			**0**		**$313,465**	**$235,099**	**$246,854**	**$0**	**$0**	**$795,418**
--- **9103.01 CONC. FOR DITCH STRUCTURES**										
	GEN	U.C. per cy	3	CN-CLAB	94.74	0	100	0	0	194.74
Form, place, & finish ditch conc		520.00	1,560	$31.58	$49,265	$0	$52,000	$0	$0	$101,265

Project Name:
TANK FARM INTERIM ACTION PHASE 1 & 2
Project Location: ***INTEC***
Estimate Number: ***2956-D***

CONSTRUCTION DETAIL ITEM REPORT

Client: ***M. S. KAPTEIN***
Prepared By: ***T. R. MITCHELL***
Estimate Type: ***TITLE II***

LEVEL	Org/Subcontractor	QTY	Hrs	Crew/Rate	Labor	Const Eqp	Matl	S/C	Other	TOTAL
--- 9103.01 CONC. FOR DITCH STRUCTURES										
	GEN	U.C. per sf	0.03	CN-CLAB	0.947	0	0	0	0	0.947
Fine grade ditches		15,260.00	458	$31.58	$14,457	$0	$0	$0	$0	$14,457
	GEN	U.C. per sf	0.25	CN-CARP	8.953	0	1.5	0	0	10.453
Form headwalls		2,990.00	748	$35.81	$26,768	$0	$4,485	$0	$0	$31,253
	GEN	U.C. per cy	4	CN-CLAB	126.32	0	120	0	0	246.32
Place, finish, & cure headwall conc		45.00	180	$31.58	$5,684	$0	$5,400	$0	$0	$11,084
Subtotal					$96,174	$0	$61,885	$0	$0	$158,059
Sales Tax					$0	$0	$3,094	$0	$0	$3,094
INEEL ORG Labor/Subcontractor Overheads					$27,919	$0	$18,863	$0	$0	$46,783
Subtotal Estimate										**$207,937**
Escalation					$4,318	$0	$2,918	$0	$0	$7,236
Contingency					$15,409	$0	$10,411	$0	$0	$25,821
---Total 9103.01 CONC. FOR DITCH STRUCTURES			**2,945**		**$143,822**	**$0**	**$97,172**	**$0**	**$0**	**$240,994**
--- 9103.02 PRECAST CONC FOR DITCHES										
	GEN	U.C. per Ea	40	CN-LABR	1263.2	0	4500	0	0	5763.2
Base for lift station		1.00	40	$31.58	$1,263	$0	$4,500	$0	$0	$5,763
	GEN	U.C. per Ea	10	CN-LABR	315.8	0	1500	0	0	1815.8
Cover for lift station		1.00	10	$31.58	$316	$0	$1,500	$0	$0	$1,816
	GEN	U.C. per Lf	4	CN-LABR	126.32	0	350	0	0	476.32
Barrel section for lift station		15.00	60	$31.58	$1,895	$0	$5,250	$0	$0	$7,145
	GEN	U.C. per Hr	1	CN-EQHV	35.49	150	0	0	0	185.49
Crane usage for lift station		20.00	20	$35.49	$710	$3,000	$0	$0	$0	$3,710
	GEN	U.C. per Ea	35	CN-LABR	1105.3	0	450	0	0	1555.3
Precast manhole det1/c-28		1.00	35	$31.58	$1,105	$0	$450	$0	$0	$1,555
	GEN	U.C. per Ea	70	CN-LABR	2210.6	0	660	0	0	2870.6
Precast manhole det1/c37		2.00	140	$31.58	$4,421	$0	$1,320	$0	$0	$5,741
	GEN	U.C. per Hr	1	CN-EQHV	35.49	150	0	0	0	185.49
Crane usage for manholes		30.00	30	$35.49	$1,065	$4,500	$0	$0	$0	$5,565
Subtotal					$10,775	$7,500	$13,020	$0	$0	$31,295
Sales Tax					$0	$0	$651	$0	$0	$651
INEEL ORG Labor/Subcontractor Overheads					$3,128	$2,177	$3,969	$0	$0	$9,274
Subtotal Estimate										**$41,220**
Escalation					$484	$337	$614	$0	$0	$1,434
Contingency					$1,726	$1,202	$2,190	$0	$0	$5,118
---Total 9103.02 PRECAST CONC FOR DITCHES			**335**		**$16,113**	**$11,216**	**$20,444**	**$0**	**$0**	**$47,773**

Project Name:
TANK FARM INTERIM ACTION PHASE 1 & 2
Project Location: ***INTEC***
Estimate Number: ***2956-D***

CONSTRUCTION DETAIL ITEM REPORT

Client: ***M. S. KAPTEIN***
Prepared By: ***T. R. MITCHELL***
Estimate Type: ***TITLE II***

LEVEL	Org/Subcontractor	QTY	Hrs	Crew/Rate	Labor	Const Eqp	Matl	S/C	Other	TOTAL
--- **9103.3 CONCRETE PAD AT SPILLWAY**										
GEN	U.C. per cy		3	CN-CLAB	94.74	0	100	0	0	194.74
Form, Place, and Finish Concrete Pad		3.65	11	$31.58	$346	$0	$365	$0	$0	$711
Subtotal					$346	$0	$365	$0	$0	$711
Sales Tax					$0	$0	$18	$0	$0	$18
INEEL ORG Labor/Subcontractor Overheads					$100	$0	$111	$0	$0	$212
Subtotal Estimate										**$941**
Escalation					$16	$0	$17	$0	$0	$33
Contingency					$55	$0	$61	$0	$0	$117
---Total 9103.3 CONCRETE PAD AT SPILLWAY			**11**		**$517**	**$0**	**$573**	**$0**	**$0**	**$1,090**
--- **9105.01 MISC METALS**										
GEN	U.C. per Ea		10	CN-IRON	435	0	1200	0	0	1635
Bilco access cover at lift station		1.00	10	$43.50	$435	$0	$1,200	$0	$0	$1,635
GEN	U.C. per Ea		0.25	CN-LABR	7.895	0	15	0	0	22.895
Delineator Post w/Reflector		2.00	1	$31.58	$16	$0	$30	$0	$0	$46
GEN	U.C. per Ea				0	0	0	50	0	50
Metal Band for HDPE Membrane Boot on 48" CMP		1.00	0		$0	$0	$0	$50	$0	$50
GEN	U.C. per Ea				0	0	0	35	0	35
Metal Band for HDPE Membrane Boot on Telephone Pole		1.00	0		$0	$0	$0	$35	$0	$35
Subtotal					$451	$0	$1,230	$85	$0	$1,766
Sales Tax					$0	$0	$62	$0	$0	$62
INEEL ORG Labor/Subcontractor Overheads					$131	$0	$375	$25	$0	$530
Subtotal Estimate										**$2,358**
Escalation					$20	$0	$58	$4	$0	$82
Contingency					$72	$0	$207	$14	$0	$293
---Total 9105.01 MISC METALS			**11**		**$674**	**$0**	**$1,931**	**$127**	**$0**	**$2,733**
--- **9109.1 POLY UREA SPRAY-ON COATING**										
SPEC	U.C. per SF				0	0	0	6	0	6
Poly Urea Spray-On Including Geotextile Material and Installation		221,365.00	0		$0	$0	$0	$1,328,190	$0	$1,328,190

Project Name:
TANK FARM INTERIM ACTION PHASE 1 & 2
Project Location: ***INTEC***
Estimate Number: ***2956-D***

CONSTRUCTION DETAIL ITEM REPORT

Client: ***M. S. KAPTEIN***
Prepared By: ***T. R. MITCHELL***
Estimate Type: ***TITLE II***

LEVEL	Org/Subcontractor	QTY	Hrs	Crew/Rate	Labor	Const Eqp	Matl	S/C	Other	TOTAL
--- **9109.1 POLY UREA SPRAY-ON COATING**										
Subtotal					$0	$0	$0	$1,328,190	$0	$1,328,190
Sales Tax					$0	$0	$0	$0	$0	$0
INEEL ORG Labor/Subcontractor Overheads					$0	$0	$0	$67,206	$0	$67,206
Subtotal Estimate										**$1,395,396**
Escalation					$0	$0	$0	$48,560	$0	$48,560
Contingency					$0	$0	$0	$216,593	$0	$216,593
---Total 9109.1 POLY UREA SPRAY-ON COATING			**0**		**$0**	**$0**	**$0**	**$1,660,550**	**$0**	**$1,660,550**
--- **9115.1 INSTALL PUMPS IN LIFTSTATION**										
PIPE	U.C. per Ea		30	CN-PIPE	1179.9	0	5400	0	0	6579.9
Purchase & install pumps		2.00	60	$39.33	$2,360	$0	$10,800	$0	$0	$13,160
PIPE	U.C. per Ea		0.6	CN-PIPE	23.598	0	200	0	0	223.598
8" 90 Ell		4.00	2	$39.33	$94	$0	$800	$0	$0	$894
PIPE	U.C. per Ea		0.6	CN-PIPE	23.598	0	160	0	0	183.598
8" Red		2.00	1	$39.33	$47	$0	$320	$0	$0	$367
PIPE	U.C. per Ea		2	CN-PIPE	78.66	0	1000	0	0	1078.66
8" Chk Valve		2.00	4	$39.33	$157	$0	$2,000	$0	$0	$2,157
PIPE	U.C. per Ea		0.5	CN-PIPE	19.665	0	180	0	0	199.665
8" Adaptor		2.00	1	$39.33	$39	$0	$360	$0	$0	$399
PIPE	U.C. per Lf		0.2	CN-PIPE	7.866	0	11	0	0	18.866
8" Pipe		10.00	2	$39.33	$79	$0	$110	$0	$0	$189
PIPE	U.C. per Hr		1	CN-EQMD	34.75	40	0	0	0	74.75
Crane usage		10.00	10	$34.75	$348	$400	$0	$0	$0	$748
Subtotal					$3,124	$400	$14,390	$0	$0	$17,914
Sales Tax					$0	$0	$720	$0	$0	$720
INEEL ORG Labor/Subcontractor Overheads					$1,310	$168	$6,336	$0	$0	$7,814
Subtotal Estimate										**$26,447**
Escalation					$154	$20	$746	$0	$0	$920
Contingency					$551	$70	$2,663	$0	$0	$3,284
---Total 9115.1 INSTALL PUMPS IN LIFTSTATION			**81**		**$5,139**	**$658**	**$24,855**	**$0**	**$0**	**$30,652**
--- **9116.1 SWITCHGEAR and DEVICES**										
ELEC	U.C. per Ea		1	CN-ELEC	35.89	0	0	0	0	35.89
Demo existing MCP in MCC-OGF-1049		1.00	1	$35.89	$36	$0	$0	$0	$0	$36
ELEC	U.C. per Ea		1.5	CN-ELEC	53.835	0	275	0	0	328.835
New 30 amp breaker		1.00	2	$35.89	$54	$0	$275	$0	$0	$329
ELEC	U.C. per Ea		0.5	CN-ELEC	17.945	0	25	0	0	42.945
Nameplate		1.00	1	$35.89	$18	$0	$25	$0	$0	$43

Project Name:
TANK FARM INTERIM ACTION PHASE 1 & 2
Project Location: ***INTEC***
Estimate Number: ***2956-D***

CONSTRUCTION DETAIL ITEM REPORT

Client: ***M. S. KAPTEIN***
Prepared By: ***T. R. MITCHELL***
Estimate Type: ***TITLE II***

LEVEL	Org/Subcontractor	QTY		Hrs	Crew/Rate	Labor	Const Eqp	Matl	S/C	Other	TOTAL
--- **9116.1 SWITCHGEAR and DEVICES**											
	ELEC	U.C. per Ea		3	CN-ELEC	107.67	0	540	0	0	647.67
Manual transfer switch, Sq.D 82343RB			1.00	3	$35.89	$108	$0	$540	$0	$0	$648
	ELEC	U.C. per Ea		4	CN-ELEC	143.56	0	0	0	0	143.56
Control Panel, CP-OGF-1572, furnishes with pumps			1.00	4	$35.89	$144	$0	$0	$0	$0	$144
	ELEC	U.C. per LF		0.1	CN-ELEC	3.589	0	3.25	0	0	6.839
P-1000 U-Strut			50.00	5	$35.89	$179	$0	$163	$0	$0	$342
	ELEC	U.C. per EA		0.3	CN-ELEC	10.767	0	4.5	0	0	15.267
P-2453 Post Base			4.00	1	$35.89	$43	$0	$18	$0	$0	$61
	ELEC	U.C. per Ea		0.1	CN-ELEC	3.589	0	1.8	0	0	5.389
P-1325 Angle Fittings			12.00	1	$35.89	$43	$0	$22	$0	$0	$65
	ELEC	U.C. per LS		10	CN-ELEC	358.9	0	30	0	0	388.9
Misc. bolts and nuts			1.00	10	$35.89	$359	$0	$30	$0	$0	$389
	ELEC	U.C. per Ea		0.5	CN-ELEC	17.945	0	3.5	0	0	21.445
3/8" Concrete anchors			8.00	4	$35.89	$144	$0	$28	$0	$0	$172
	ELEC	U.C. per Ea			CN-ELEC	0	0	0	750	0	750
4'x6" x 3'6" x 6" Concrete pad			1.00	0		$0	$0	$0	$750	$0	$750
	ELEC	U.C. per Ea		1.5	CN-ELEC	53.835	0	313	0	0	366.835
Crouse Hinds AREA 10425 recp't			2.00	3	$35.89	$108	$0	$626	$0	$0	$734
	ELEC	U.C. per Ea		1	CN-ELEC	35.89	0	10	0	0	45.89
Ultrasonic Level Controller, furnished with pumps, connect only			2.00	2	$35.89	$72	$0	$20	$0	$0	$92
Subtotal						$1,306	$0	$1,746	$750	$0	$3,802
Sales Tax						$0	$0	$87	$0	$0	$87
INEEL ORG Labor/Subcontractor Overheads						$548	$0	$769	$314	$0	$1,631
Subtotal Estimate											**$5,521**
Escalation						$65	$0	$91	$37	$0	$192
Contingency						$230	$0	$323	$132	$0	$686
---Total 9116.1 SWITCHGEAR and DEVICES				**36**		**$2,149**	**$0**	**$3,016**	**$1,234**	**$0**	**$6,399**
--- **9116.2 RACEWAYS AND ENCLOSURES**											
	ELEC	U.C. per LF		0.12	CN-ELEC	4.307	0	2.79	0	0	7.097
1" GRC with fittings and supports			450.00	54	$35.89	$1,938	$0	$1,256	$0	$0	$3,194
	ELEC	U.C. per Ea		0.2	CN-ELEC	7.178	0	2.5	0	0	9.678
1" x 6" nipple with LN and Bushings			2.00	0	$35.89	$14	$0	$5	$0	$0	$19
	ELEC	U.C. per Ea		0.3	CN-ELEC	10.767	0	6.5	0	0	17.267
PB-167 and 169			2.00	1	$35.89	$22	$0	$13	$0	$0	$35

Project Name:
TANK FARM INTERIM ACTION PHASE 1 & 2
Project Location: ***INTEC***
Estimate Number: ***2956-D***

CONSTRUCTION DETAIL ITEM REPORT

Client: ***M. S. KAPTEIN***
Prepared By: ***T. R. MITCHELL***
Estimate Type: ***TITLE II***

LEVEL	Org/Subcontractor	QTY		Hrs	Crew/Rate	Labor	Const Eqp	Matl	S/C	Other	TOTAL
--- **9116.2 RACEWAYS AND ENCLOSURES**											
	ELEC	U.C. per Ea		0.4	CN-ELEC	14.356	0	30	0	0	44.356
Appleton EJB-464 J-box			2.00	1	$35.89	$29	$0	$60	$0	$0	$89
	ELEC	U.C. per Ea		0.5	CN-ELEC	17.945	0	9.5	0	0	27.445
LR 3/4" with gasket and cover			2.00	1	$35.89	$36	$0	$19	$0	$0	$55
	ELEC	U.C. per Ea		0.5	CN-ELEC	17.945	0	25	0	0	42.945
3/4" sealtite flex, 3" with connectors			2.00	1	$35.89	$36	$0	$50	$0	$0	$86
	ELEC	U.C. per LF		0.06	CN-ELEC	2.153	0	0.35	0	0	2.503
1" PVC conduit			350.00	21	$35.89	$754	$0	$123	$0	$0	$876
	ELEC	U.C. per EA		0.1	CN-ELEC	3.589	0	1.75	0	0	5.339
1" PVC FA			4.00	0	$35.89	$14	$0	$7	$0	$0	$21
	ELEC	U.C. per EA		0.1	CN-ELEC	3.589	0	2.5	0	0	6.089
1" 90 deg. GRC ell			4.00	0	$35.89	$14	$0	$10	$0	$0	$24
	ELEC	U.C. per EA		0.01	CN-ELEC	0.359	0	1	0	0	1.359
1" Base spacer			60.00	1	$35.89	$22	$0	$60	$0	$0	$82
Subtotal						$2,878	$0	$1,602	$0	$0	$4,480
Sales Tax						$0	$0	$80	$0	$0	$80
INEEL ORG Labor/Subcontractor Overheads						$1,207	$0	$705	$0	$0	$1,912
Subtotal Estimate											**$6,473**
Escalation						$142	$0	$83	$0	$0	$225
Contingency						$507	$0	$296	$0	$0	$804
---Total 9116.2 RACEWAYS AND ENCLOSURES				**80**		**$4,735**	**$0**	**$2,767**	**$0**	**$0**	**$7,502**
--- **9116.3 CONDUCTORS AND GROUNDING**											
	ELEC	U.C. per LF		0.008	CN-ELEC	0.287	0	0.08	0	0	0.367
#14 thhn copper wire			1,000.00	8	$35.89	$287	$0	$80	$0	$0	$367
	ELEC	U.C. per LF		0.01	CN-ELEC	0.359	0	0.2	0	0	0.559
RG-6U2 Cable			450.00	5	$35.89	$162	$0	$90	$0	$0	$252
	ELEC	U.C. per LF		0.01	CN-ELEC	0.359	0	1.1	0	0	1.459
#8 thhn copper wire			1,500.00	15	$35.89	$538	$0	$1,650	$0	$0	$2,188
	ELEC	U.C. per LF		0.02	CN-ELEC	0.718	0	1	0	0	1.718
#2 bare copper			30.00	1	$35.89	$22	$0	$30	$0	$0	$52
	ELEC	U.C. per Ea		10	CN-ELEC	358.9	0	25	0	0	383.9
5/8" x 10' ground rod			2.00	20	$35.89	$718	$0	$50	$0	$0	$768
	ELEC	U.C. per Ea		1	CN-ELEC	35.89	0	20	0	0	55.89
Cadwelds			2.00	2	$35.89	$72	$0	$40	$0	$0	$112

Project Name:
TANK FARM INTERIM ACTION PHASE 1 & 2
Project Location: ***INTEC***
Estimate Number: ***2956-D***

CONSTRUCTION DETAIL ITEM REPORT

Client: ***M. S. KAPTEIN***
Prepared By: ***T. R. MITCHELL***
Estimate Type: ***TITLE II***

LEVEL	Org/Subcontractor	QTY		Hrs	Crew/Rate	Labor	Const Eqp	Matl	S/C	Other	TOTAL
--- **9116.3 CONDUCTORS AND GROUNDING**											
	ELEC	U.C. per Ea		20	CN-ELEC	717.8	0	35	0	0	752.8
Connect 7.5 HP Pumps			2.00	40	$35.89	$1,436	$0	$70	$0	$0	$1,506
Subtotal						$3,234	$0	$2,010	$0	$0	$5,244
Sales Tax						$0	$0	$101	$0	$0	$101
INEEL ORG Labor/Subcontractor Overheads						$1,356	$0	$885	$0	$0	$2,241
Subtotal Estimate											**$7,585**
Escalation						$160	$0	$104	$0	$0	$264
Contingency						$570	$0	$372	$0	$0	$942
---Total 9116.3 CONDUCTORS AND GROUNDING				**90**		**$5,319**	**$0**	**$3,472**	**$0**	**$0**	**$8,791**
--- **9116.4 DUCTBANK**											
	ELEC	U.C. per CY				0	0	0	15	0	15
Excavation			40.00	0		$0	$0	$0	$600	$0	$600
	ELEC	U.C. per CY				0	0	0	20	0	20
Backfill			30.00	0		$0	$0	$0	$600	$0	$600
	ELEC	U.C. per CY				0	0	0	6	0	6
Haul			10.00	0		$0	$0	$0	$60	$0	$60
	ELEC	U.C. per SF				0	0	0	4.5	0	4.5
Formwork			350.00	0		$0	$0	$0	$1,575	$0	$1,575
	ELEC	U.C. per LBS				0	0	0	0.75	0	0.75
#4 rebar			500.00	0		$0	$0	$0	$375	$0	$375
	ELEC	U.C. per CY				0	0	0	125	0	125
Red concrete			10.00	0		$0	$0	$0	$1,250	$0	$1,250
	ELEC	U.C. per CY				0	0	0	20	0	20
Backfill			30.00	0		$0	$0	$0	$600	$0	$600
	ELEC	U.C. per LF		0.002	CN-ELEC	0.072	0	0.15	0	0	0.222
Locator Ribbon			200.00	0	$35.89	$14	$0	$30	$0	$0	$44
Subtotal						$14	$0	$30	$5,060	$0	$5,104
Sales Tax						$0	$0	$2	$0	$0	$2
INEEL ORG Labor/Subcontractor Overheads						$6	$0	$13	$2,122	$0	$2,141
Subtotal Estimate											**$7,247**
Escalation						$1	$0	$2	$250	$0	$252
Contingency						$3	$0	$6	$892	$0	$900
---Total 9116.4 DUCTBANK				**0**		**$24**	**$0**	**$52**	**$8,324**	**$0**	**$8,399**
--- **9116.5 TESTING**											
	ELEC	U.C. per LOT		12	CN-ELEC	430.68	0	0	0	0	430.68
CC testing of systems			1.00	12	$35.89	$431	$0	$0	$0	$0	$431

Project Name:
TANK FARM INTERIM ACTION PHASE 1 & 2
Project Location: ***INTEC***
Estimate Number: ***2956-D***

CONSTRUCTION DETAIL ITEM REPORT

Client: ***M. S. KAPTEIN***
Prepared By: ***T. R. MITCHELL***
Estimate Type: ***TITLE II***

LEVEL	Org/Subcontractor		QTY	Hrs	Crew/Rate	Labor	Const Eqp	Matl	S/C	Other	TOTAL
--- **9116.5 TESTING**											
Subtotal						$431	$0	$0	$0	$0	$431
Sales Tax						$0	$0	$0	$0	$0	$0
INEEL ORG Labor/Subcontractor Overheads						$181	$0	$0	$0	$0	$181
Subtotal Estimate											**$611**
Escalation						$21	$0	$0	$0	$0	$21
Contingency						$76	$0	$0	$0	$0	$76
---Total 9116.5 TESTING				**12**		**$708**	**$0**	**$0**	**$0**	**$0**	**$708**
--- **9116.6 REPAIR CATHODIC PROTECTION**											
Memo:	***Use one break per 100 lf of excavation and two splices per break.***										
	ELEC	U.C. per Ea		4	CN-ELEC	143.56	0	60	0	0	203.56
Repair cathodic protection wires			50.00	200	$35.89	$7,178	$0	$3,000	$0	$0	$10,178
Subtotal						$7,178	$0	$3,000	$0	$0	$10,178
Sales Tax						$0	$0	$150	$0	$0	$150
INEEL ORG Labor/Subcontractor Overheads						$3,010	$0	$1,321	$0	$0	$4,331
Subtotal Estimate											**$14,659**
Escalation						$355	$0	$156	$0	$0	$510
Contingency						$1,265	$0	$555	$0	$0	$1,820
---Total 9116.6 REPAIR CATHODIC PROTECTION				**200**		**$11,808**	**$0**	**$5,182**	**$0**	**$0**	**$16,989**
--- **GAPIF Non-Org G&A and PIF**											
Memo:	***This is a model that works with the macro named "INEELRollup_Rev0.BAS".***										
PF	NOGAPIF	U.C. per $				0	0	0	0	1	1
Procurement Fee %			69,993.00	0		$0	$0	$0	$0	$69,993	$69,993
G&A	NOGAPIF	U.C. per $				0	0	0	0	1	1
G&A Fee %			26,597.00	0		$0	$0	$0	$0	$26,597	$26,597
Subtotal						$0	$0	$0	$0	$96,590	$96,590
Sales Tax						$0	$0	$0	$0	$0	$0
INEEL ORG Labor/Subcontractor Overheads						$0	$0	$0	$0	$0	$0
Subtotal Estimate											**$96,590**
Escalation						$0	$0	$0	$0	$0	$0
Contingency						$0	$0	$0	$0	$0	$0
---Total GAPIF Non-Org G&A and PIF				**0**		**$0**	**$0**	**$0**	**$0**	**$96,590**	**$96,590**

Project Name:
TANK FARM INTERIM ACTION PHASE 1 & 2
Project Location: ***INTEC***
Estimate Number: ***2956-D***

CONSTRUCTION DETAIL ITEM REPORT

Client: ***M. S. KAPTEIN***
Prepared By: ***T. R. MITCHELL***
Estimate Type: ***TITLE II***

LEVEL	Org/Subcontractor	QTY	Hrs	Crew/Rate	Labor	Const Eqp	Matl	S/C	Other	TOTAL
Subtotal	TANK FARM INTERIM ACTION PHASE 1 & 2				$879,753	$323,849	$326,638	$1,679,797	$116,590	$3,326,627
Sales Tax					$0	$0	$16,332	$0	$0	$16,332
INEEL ORG Labor/Subcontractor Overheads					$286,944	$113,644	$125,406	$116,155	$0	$642,149
Subtotal Estimate										$3,985,108
Escalation					$40,601	$15,225	$16,299	$62,499	$696	$135,320
Contingency					$176,154	$71,732	$57,505	$266,615	$2,484	$574,489
Total TANK FARM INTERIM ACTION PHASE 1 & 2			14,377		$1,383,452	$524,450	$542,180	$2,125,066	$119,770	$4,694,917

Appendix K

Other Procedures Relevant to the RA

INEEL
Idaho National Engineering & Environmental Laboratory

412.09
(10/06/99 - Rev. 04)

Analytical Method Analytical Laboratories Department	IN SITU GAMMA RADIATION MEASUREMENT OF SOILS	Identifier: Revision: Page:	ACMM-3994 0 1 of 9
Document Control Center: (208) 526-3296	Document Owner/Approver: Analytical Laboratory Department Manager	Effective Date:	FEB 07 2000

Manual: Analytical Chemistry Methods Manual, Volume II USE TYPE 2 DAR Number: 2-040

CONTROLLED DOCUMENT
COPY NO.: 242 ISSUE DATE: 2-7-00

1.0 ABSTRACT

Procedures are described for in-situ identification and measurement of gamma-ray radioactivity. The scope involves a discussion of instrumentation, setup, calibration, and analysis. Field screening is performed using a portable 30% HPGe p-type germanium detector. Spectra are analyzed using the USDOE Environmental Measurements Laboratory M1 protocol and software.

2.0 APPLICABILITY

Field (*in-situ*) γ-ray spectroscopy using portable high resolution Ge detectors is applicable to the rapid determination of natural and man-made radionuclides in the environment. When the source geometry is taken into account, the concentrations (activity per unit area or volume) of these radionuclides in the soil can be inferred along with the contribution to the above ground exposure rate. Applications have included: the measurement of natural background and weapons test fallout emitters, the determination of aged fallout levels in terrain with mixed ground cover, site characterization for environmental restoration, routine monitoring, and assessment of radionuclides deposited during emergencies. Once areas of concern are identified, they are scanned using a HPGe (high-purity germanium) γ-ray spectroscopy detector coupled to the EG&G ORTEC "DART" multichannel system.

The high resolution high-purity germanium coaxial crystal does require a 6 hour cryogenic cool-down time before becoming operational, but can sustain warm-up when not in use. This is a convenient feature during extended field trips. The 4-liter dewar can be hand-held although it is best suited for tripod mounting. The instrument is positioned ~1 meter (3.3ft) above ground for the initial scanning activity. The resulting field of view at this elevation is a circle with a diameter of 20 meters (66 ft). The detector may be lowered in-place to reduce the field of view proportionately and narrow the area of potential contamination, which can be flagged for further scanning.

Generally, measurements are made in the field using a portable battery-powered computer-based spectroscopy system. High voltage and preamplifier power are supplied to the detector by the system. Low power amplifiers provide for extended operational time when using battery power in the field. A spectroscopy grade amplifier is also contained within the system. The complete spectrometer system can be carried and operated by two field operators.

3.0 DISCUSSION

The in-situ gamma radiation survey involves measuring gamma radiation from a position above the surface of interest. Radionuclides within the soil emit photons. The soil dissipates photon energy through absorption and scattering processes, but some energy escapes the soil zone and radiates outward to interact with the γ-ray detector. The detector "counts" these interactions to give a measure of the radioactivity present. The number of gamma rays " counted" at a given measurement point depends on several factors listed below:

3.1 **Sensor Field of View**; only photons traveling along a path contained within the sensor field of view will have a chance to interact with the detector.

3.2 **Soil Density**; soil density affects photon attenuation and thus the number of "counts" recorded per disintegration.

3.3 **Gamma-ray Energy**; photon energy affects photon attenuation and thus the number of "counts" recorded per disintegration.

3.4 **Detector Efficiency**; some, but not all photon-detector interactions produce a valid "count" depending the detector efficiency.

3.5 **Amount and Distribution of Radionuclide in the Soil**; the source geometry (concentration and distribution) is the parameter solved for in the conversion process - normally, exponential distribution must be assumed in order to determine concentration.

One of the distinct advantages of in-situ measurement relates to the detector field of view. The field of view may be made quite large through appropriate detector design and placement, permitting the detector to count photons emitted over an extended area. Thus, even for low radionuclide concentrations, a large number of photon-detector interactions occur and the measurement may be made rapidly. At this measurement rate it becomes possible to fully map radionuclide concentrations over a large area by attaching the detector to a mobile system and traversing the area of interest.

Ease of handling is best accomplished with a detector mounted in a cryostat that is small (hand-held) and which has an all-attitude capability. Ideally, the detector assembly should be mounted on a tripod with the crystal endcap facing down toward the ground and the dewar above. This orientation maximizes the flux that will be intercepted and registered by the detector. A standard dewar with an upward facing endcap can still be used without a large loss of efficiency, since most of the flux is incident at the sidewall of the detector, with the dewar blocking out only a few percent of the ground area that is effectively being measured. In either the upward or downward facing geometries, the axis of rotation for the cylindrical crystal is perpendicular to the ground plane. As such, the detector can be assumed to have a symmetrical azimuthal or angular response. A "gooseneck" cryostat, where the crystal axis is parallel to the ground plane, should be avoided since this introduces asymmetry and would require making complicated angular corrections. There are a number of naturally-occurring radionuclides that contribute to

the gamma-ray background using a Ge detector. These include contributions from: cosmic rays, ^{40}K, radon, primordial emitters ^{238}U, ^{232}U, ^{235}U and their daughters.

4.0 SAFETY PRECAUTIONS

Company Manual 14, *Safety and Health*. All radioactive materials must be handled in strict accordance with Company Manual 15, *Radiation Protection Procedures*. All radiological work must be performed under an applicable Radiological Work Permit (RWP) for the area (see MCP-7) Radiological Work Permit. As the HPGe detector requires cryogenics (LN_2), the Material Safety Data Sheets (MSDS) for filling dewars should be strictly followed. Individuals are encouraged to seek more information from the MSDS's, laboratory supervision, and Industrial Safety personnel A reference file of the MSDS's can be found on the INEEL intranet under Netscape/MSDS Resources. Care should taken when transporting and assembling the many components involved with the M1/DART setup. **The HPGe detector must be powered-up to very high voltages for proper operation. Care must be taken to ensure that the system is powered-down before the system is disassembled, or any modifications to the physical connections are made.**

5.0 APPARATUS AND REAGENTS

A. Apparatus

1. Battery charger adapter for cigarette lighter.
2. EG&G HPGe γ-ray spectroscopy detector.
3. EG&G ORTEC "DART" batteries (Duracell 6V NiMH DR11) and charger units.
4. EG&G ORTEC "DART" integrated spectroscopy system.
5. Field notebook and waterproof black ink pens.
6. Hammer and stakes as needed for future mapping and sampling.
7. Leather gloves.
8. Mounting tripod for EG&G HPGe γ-ray spectroscopy detector.
9. Mouse for Panasonic CF-25.
10. Multi-plug power strip.
11. Panasonic batteries (10.8V Li-ion CF-VZS251, or 9.6V NiMH CF-VZS250A) and charger units.
12. Panasonic CF-25 portable laptop computer. Battery charger adapter for cigarette lighter.
13. Parallel port cable for Panasonic.

14. Utility cable link (housing high-voltage, output, shut-down, pre-amp, and test cables) for DART and M1.

B. Reagents

None

6.0 SAMPLE HANDLING

There are no sample handling requirements for this method since no samples are taken or handled.

7.0 PROCEDURES

A. Set-up of M1

The M1 software set with incorporated GammaVision software programs is a very comprehensive software system.. As an aid to the user in bringing the system into operation as quickly as possible, a simplified initial start-up sequence based on default settings is provided in the EG&G ORTEC Software Users Manual.

This start-up sequence will give "cook book" instruction steps to accomplish initial software installation, file setup, and energy and resolution calibration of the system. After completing the energy and resolution calibration steps, the user can operate all portions of the software during the fine tuning of the system in preparation for actual field work.

At the end of this initial start-up procedure, the user will be directed to other sections of the manuals which explain M-1 features and file concepts which must be reviewed and refined prior to actual *in-situ* measurements. In particular, it is important that the user understand the *"alpha/rho"* concept which is the basis for applying radionuclide depth distribution corrections to radionuclide activity as measured by the M-1 spectrometer system.

The initial start-up sequence consists of three major steps:

1.) Install M1 software.

2.) Setup required files.

3.) Perform initial energy and FWHM calibrations.

These simplified initial instructions are based on default values for parameter files which correspond to the EG&G ORTEC M-1 system including the NOMAD Portable Spectroscopy System. For systems consisting of other components, the user will need to refer to the appropriate sections and appendices of the M-1 manual to determine and set correct parameters for that system.

B. M1 Software Methodology

The M1 In-situ Applications Software package is intended to provide both qualitative and quantitative analysis of results of radionuclides deposited through various scenarios in non-laboratory environments. The Software package is based upon methods developed by Beck et al. during their tenure at the Environmental Measurements Laboratory within the U. S. Department of Energy.

The M1 In-situ Applications Software accomplishes these goals in a five-stage process.

1. Field acquisition of a calibration spectrum followed by Energy and Full Width Half Maximum (FWHM) calculations and storage of all coefficients.

   This is accomplished by a two peak field calibration scanning of ^{40}K, and ^{137}Cs.

NOTE: *It should be noted that an in-lab calibration with a multi-nuclide is performed before entering the field. Nuclides scanned can include ^{60}Co, ^{241}Am, ^{137}Cs, ^{40}K, and ^{232}Th and 238U series.*

2. Field aquisition of an In-situ spectrum followed by the peak search routines necessary to yield net count rate per gamma ray energy.

   a. Connect the HPGe to the DART via the utility cable and attach the corresponding cables.

      The "Test" cable will remain and is not required for M1 operation.

   b. Connect the DART to the Panasonic CF-25 via the parallel port cord.

c. Turn on the DART unit.

d. Turn on the Panasonic CF-25.

The program should autoload. If the system does not auto load, press F1.

e. Launch Battery Monitor.

Ensure sufficient power.

f. Launch Shortcut to M1 Setup and check desired settings.

Detector:

i. Efficiency: 30%

ii. Orientation: Down.

iii. Aspect Ratio: Usually ≈0.9

iv. Calibration Use File

C:\user\field.clb

Acquisition:

i. Live time preset: 0.

ii. Real time Preset: Per project.

Analysis:

i. Alpha/Rho File: Usually

C:\user\M1.rho

ii. Check other presets: Library file, fraction limit, energy tolerance, date analyze channels, and FWHM. Peak sensitivity usually 1, background type, 5.

Report:

i. Activity units: Typically pCi.

ii. Reporting Uncertainty: 2.

iii. Send to: Program

g. Launch Shortcut to M1 OP

NOTE: *If system will not power up, the HPGe crystal may not be sufficiently cooled yet.*

Acquire:

i. Adjust Settings: Power ON and Pull Zero.

Enter:

i. Spectrum ID.

ii. Location.

iii. Use calib file.

Make sure live time is counting.

h. Start Count.

i. At the completion of the count.

NOTE: *The DART will store a spectrum while a PC is not attached.*

Analyze:

i. Analyze Full Spectrum in Memory.

j. Start next count.

k. At the completion of the field screening, power down the system, turn off Panasonic and DART.

3. Application of Calibration Factors derived from the methods described by Beck et al. Yielding qualitative and quantitative analysis results.

4. Storage of all acquired data and analysis results in separate files identified per field location.

5. Capability of supervisory / administrative review or re-analysis of all stored data files and analysis results.

8.0 QUALITY CONTROL REQUIREMENTS

Quality control for this method consists of a daily energy calibration check using a NIST traceable mixed nuclide isotopic source. The location of the Am-241 peak at 59.5 kev, the Cs-137 peak at 661 kev and the Co-60 peak at 1332 kev are verified to within +/- 2 kev. If these peaks do not fall within the proper energy regions, the system is not used until recalibration is completed.

No other quality control requirements are needed for this method.

9.0 CALCULATIONS

Calculations are based on the M-1 software in conjunction with the Alpha/Rho value assigned the designation as a man-made or naturally occurring radionuclide, and the library file parameter for that radionuclide.

10.0 REFERENCES

10.1 EG&G ORTEC *Software User's Manual M-1-B1*

10.2 EG&G DART *Portable Spectrometer Software/Hardware User's Manual*

10.3 Environmental Measurements Laboratory Manual, Section 3.1, vol. 1, Rev. 0 February 1997

10.4 EG&G ORTEC *Catalog of Applied Nuclear Spectroscopy*, 1997-1998

10.5 MCP-7, *Radiological Work Permit*

10.6 Company Manual 14, *Safety and Health*

10.7 Company Manual 15, *Radiation Protection Procedures*

11.0 SUPPLEMENTAL INFORMATION

1. History of Method ACMM-3994

Revision	Author(s)	Date
Original	C. P. Oertel	February 2000

12.0 APPROVAL SIGNATURE BLOCK

POSITION TITLE	SIGNATURE	DATE
Method Author	for C. P. Oertel	02/03/2000
Responsible ALD Tech Leader		02/03/2000
Responsible ALD Supervisor	for K L Martin	02/03/2000
ALD QA Officer		02/03/2000
ALD Manager		2/3/2000

Appendix L

Operation and Maintenance Plan for the INTEC Operable Unit 3-13 Tank Farm Interim Action

DOE/ID-10771

The document that was the subject of this appendix was provided as an attachment to the original deliverable.

Appendix M

Waste Management Plan for the INTEC Operable Unit 3-13 Tank Farm Interim Action

DOE/ID-10770

The document that was the subject of this appendix was provided as an attachment to the original deliverable.

Appendix N

Health and Safety Plan for Waste Area Group 3, Operable Unit 3-13, Group 1 Soils Tank Farm Interim Action

INEEL/EXT-2000-00194

The document that was the subject of this appendix was provided as an attachment to the original deliverable.

Appendix O

OU 3-13 Tank Farm Interim Action Polyurea Demonstration Report

INEEL/EXT-2000-00929

The document that was the subject of this appendix was provided as an attachment to the original deliverable.