LOFT INTEGRAL TEST SYSTEM

# FINAL SAFETY ANALYSIS REPORT

# VOLUME 1

Aerojet Nuclear Company

ANCR-1142

UC-78

# LOFT INTEGRAL TEST SYSTEM
# FINAL SAFETY ANALYSIS REPORT

VOLUME 1 OF 3


Aerojet Nuclear Company

NATIONAL REACTOR TESTING STATION

Idaho Falls, Idaho – 83401



DATE PUBLISHED—MARCH 1974

PREPARED FOR THE

U. S. ATOMIC ENERGY COMMISSION

IDAHO OPERATIONS OFFICE UNDER CONTRACT AT(10-1)-1375

LEGAL NOTICE

This report was prepared as an account of work sponsored by the United States Government. Neither the United States nor the United States Atomic Energy Commission, nor any of their employees, nor any of their contractors, subcontractors, or their employees, makes any warranty, express or implied, or assumes any legal liability or responsibility for the accuracy, completeness or usefulness of any information, apparatus, product or process disclosed, or represents that its use would not infringe privately owned rights.

ANCR-1142

Light-Water Reactor Technology
TID-4500
Limited Distribution

# LOFT INTEGRAL TEST SYSTEM

# FINAL SAFETY ANALYSIS REPORT

VOLUME 1 OF 3

AEROJET NUCLEAR COMPANY

Date Published - March 1974

PREPARED FOR THE U.S. ATOMIC ENERGY COMMISSION
IDAHO OPERATIONS OFFICE
UNDER CONTRACT NO. AT(10-1)-1375

CONTENTS

1.0 INTRODUCTION AND GENERAL DESCRIPTION OF FACILITY ..... 1-1

1.1 Introduction ..... 1-1

1.1.1 General Characteristics ..... 1-1
1.1.2 Safety Assessment ..... 1-3

1.2 General Plant Description ..... 1-5

1.2.1 Principal Design Criteria ..... 1-5
1.2.2 Site Characteristics ..... 1-8
1.2.3 Facility Layout ..... 1-9
1.2.4 Nuclear Steam Supply System ..... 1-10

1.2.4.1 Reactor System ..... 1-11

1.2.4.1.1 Reactor Internals ..... 1-11
1.2.4.1.2 Reactor Core ..... 1-12
1.2.4.1.3 Control Rod Assemblies ..... 1-13

1.2.4.2 Primary Coolant System ..... 1-13
1.2.4.3 Secondary Coolant System ..... 1-15
1.2.4.4 Blowdown System ..... 1-15

1.2.5 Containment Vessel ..... 1-16
1.2.6 Engineered Safety Features ..... 1-17
1.2.7 Support Buildings and Facilities ..... 1-17

1.2.7.1 Service Building ..... 1-17
1.2.7.2 Control and Equipment Building ..... 1-17
1.2.7.3 Hangar Building ..... 1-18
1.2.7.4 Technical Support Facilities ..... 1-18
1.2.7.5 Fuel Assembly and Storage Area ..... 1-18
1.2.7.6 Railroad System ..... 1-19

1.2.8 Instrumentation and Control Systems ..... 1-19
1.2.9 Electrical Systems ..... 1-19
1.2.10 Auxiliary Systems ..... 1-20

1.2.10.1 Purification and Sampling Systems ..... 1-20
1.2.10.2 Primary Coolant Addition and Control System ..... 1-21
1.2.10.3 Component Cooling Water System ..... 1-21
1.2.10.4 Plant, Instrument, and Breathing Air System - Instrument Air and Gas System ..... 1-22
1.2.10.5 Steam, Condensate, and Boiler Feedwater System ..... 1-22
1.2.10.6 Communications, Emergency Warning, and Plant Surveillance Systems ..... 1-22

1.2.10.7 Heating and Ventilating System . . . . . 1-23
1.2.10.8 Decay Heat Removal Systems . . . . . 1-23
1.2.10.9 Fuel Handling System. . . . . 1-24
1.2.10.10 Water Systems . . . . . 1-24

1.2.11 Waste Systems. . . . . 1-24

1.2.11.1 Radioactive and Chemical Liquid Wastes. . . . . 1-25
1.2.11.2 Gaseous Wastes . . . . . 1-25
1.2.11.3 Solid Wastes. . . . . 1-26

1.2.12 Radiation Protection System . . . . . 1-26

1.3 Research and Development Programs. . . . . 1-27

1.3.1 Requalification and Posttest Fuel Examination Program. . . 1-27
1.3.2 Fuel Assembly Design Verification. . . . . 1-28
1.3.3 Quick-Opening Blowdown Valves. . . . . 1-28
1.3.4 Primary Coolant Pumps . . . . . 1-28
1.3.5 Core Flow Distribution. . . . . 1-29

1.4 References. . . . . 1-29

APPENDIX 1-A - GENERAL DESIGN CRITERIA . . . . . 1-43

1.A.1 Criterion 1 - Quality Standards and Records. . . . . 1-43

1.A.1.1 Requirements . . . . . 1-43
1.A.1.2 Discussion . . . . . 1-43

1.A.1.2.1 Essential Systems and Components . . . . . 1-43

1.A.1.3 Codes and Standards. . . . . 1-44
1.A.1.4 Quality Assurance Program. . . . . 1-44
1.A.1.5 Test Inspection . . . . . 1-44
1.A.1.6 Records . . . . . 1-45

1.A.2 Criterion 2 - Design Bases for Protection Against Natural Phenomena. . . . . 1-45

1.A.2.1 Requirements . . . . . 1-45
1.A.2.2 Discussion . . . . . 1-45

1.A.2.2.1 Essential Systems and Components . . . . . 1-45
1.A.2.2.2 Performance Standards . . . . . 1-46

1.A.3 Criterion 3 - Fire Protection. . . . . 1-46

1.A.3.1 Requirements . . . . . 1-46
1.A.3.2 Discussion . . . . . 1-47

1.A.4 Criterion 4 - Environmental and Missile Design Bases. . . . . 1-48

1.A.4.1 Requirements . . . . . 1-48
1.A.4.2 Discussion . . . . . 1-48

1.A.4.2.1 Environmental . . . . . 1-48
1.A.4.2.2 Dynamic Effects . . . . . 1-48

1.A.5 Criterion 5 - Sharing of Structures, Systems, and Components . . . . 1-49

1.A.5.1 Requirements . . . . . 1-49
1.A.5.2 Discussion . . . . . 1-49

1.A.6 Criterion 10 - Reactor Design . . . . . 1-49

1.A.6.1 Requirements . . . . . 1-49
1.A.6.2 Discussion . . . . . 1-50

1.A.7 Criterion 11 - Reactor Inherent Protection . . . . . 1-52

1.A.7.1 Requirements . . . . . 1-52
1.A.7.2 Discussion . . . . . 1-52

1.A.8 Criterion 12 - Suppression of Reactor Power Oscillations . . . . . 1-52

1.A.8.1 Requirements . . . . . 1-52
1.A.8.2 Discussion . . . . . 1-52

1.A.9 Criterion 13 - Instrumentation and Control . . . . . 1-52

1.A.9.1 Requirements . . . . . 1-52
1.A.9.2 Discussion . . . . . 1-53

1.A.10 Criterion 14 - Reactor Coolant Pressure . . . . . 1-54

1.A.10.1 Requirements . . . . . 1-54
1.A.10.2 Discussion . . . . . 1-54

1.A.11 Criterion 15 - Reactor Coolant System Design . . . . . 1-55

1.A.11.1 Requirements . . . . . 1-55
1.A.11.2 Discussion . . . . . 1-55

1.A.12 Criterion 16 - Containment Design . . . . . 1-55

1.A.12.1 Requirements . . . . . 1-55
1.A.12.2 Discussion . . . . . 1-56

1.A.13 Criterion 17 - Electrical Power Systems . . . . . 1-56

1.A.13.1 Requirements . . . . . 1-56
1.A.13.2 Discussion . . . . . 1-57

1.A.14 Criterion 18 - Inspection and Testing of Electric Power Systems . . . . . 1-59

1.A.14.1 Requirements . . . . . 1-59
1.A.14.2 Discussion . . . . . 1-59

1.A.15 Criterion 19 - Control Room . . . . . 1-59

1.A.15.1 Requirements . . . . . 1-59
1.A.15.2 Discussion . . . . . 1-60

1.A.16 Criterion 20 - Protection System Functions . . . . . 1-61

1.A.16.1 Requirements . . . . . 1-61
1.A.16.2 Discussion . . . . . 1-61

1.A.17 Criterion 21 - Protection System Reliability and Testing. . . . . 1-62

1.A.17.1 Requirements . . . . . 1-62
1.A.17.2 Discussion . . . . . 1-62

1.A.18 Criterion 22 - Protection System Independence . . . . . 1-63

1.A.18.1 Requirements . . . . . 1-63
1.A.18.2 Discussion . . . . . 1-63

1.A.19 Criterion 23 - Protection System Failure Modes . . . . . 1-64

1.A.19.1 Requirements . . . . . 1-64
1.A.19.2 Discussion . . . . . 1-64

1.A.20 Criterion 24 - Separation of Protection and Control Systems . . . . . 1-65

1.A.20.1 Requirements . . . . . 1-65
1.A.20.2 Discussion . . . . . 1-65

1.A.21 Criterion 25 - Protection System Requirements for Reactivity Control Malfunctions . . . . . 1-65

1.A.21.1 Requirements . . . . . 1-65
1.A.21.2 Discussion . . . . . 1-66

1.A.22 Criterion 26 - Reactivity Control System Redundancy and Capability. . . . . 1-66

1.A.22.1 Requirements . . . . . 1-66
1.A.22.2 Discussion . . . . . 1-66

1.A.23 Criterion 27 - Combined Reactivity Control Systems Capability . . . 1-67

1.A.23.1 Requirements . . . . . 1-67
1.A.23.2 Discussion . . . . . 1-67

1.A.24 Criterion 28 - Reactivity Limits . . . . . 1-68

1.A.24.1 Requirements . . . . . 1-68
1.A.24.2 Discussion . . . . . 1-68

1.A.25 Criterion 29 - Protection Against Anticipated Operational Occurrences . . . . . 1-68

1.A.25.1 Requirements . . . . . 1-68
1.A.25.2 Discussion . . . . . 1-69

1.A.26 Criterion 30 - Quality of Reactor Coolant Pressure Boundary. . . . . 1-69

1.A.26.1 Requirements . . . . . 1-69
1.A.26.2 Discussion . . . . . 1-69

1.A.27 Criterion 31 - Fracture Prevention of Reactor Coolant Pressure Boundary. . . . . 1-69

1.A.27.1 Requirements . . . . . 1-69
1.A.27.2 Discussion . . . . . 1-70

1.A.28 Criterion 32 - Inspection of Reactor Coolant Pressure Boundary . . 1-71

1.A.28.1 Requirements . . . . . 1-71
1.A.28.2 Discussion . . . . . 1-71

1.A.29 Criterion 33 - Reactor Coolant Makeup . . . . . 1-72

1.A.29.1 Requirements . . . . . 1-72
1.A.29.2 Discussion . . . . . 1-72

1.A.30 Criterion 34 - Residual Heat Removal . . . . . 1-73

1.A.30.1 Requirements . . . . . 1-73
1.A.30.2 Discussion . . . . . 1-73

1.A.31 Criterion 35 - Emergency Core Cooling. . . . . 1-74

1.A.31.1 Requirements . . . . . 1-74
1.A.31.2 Discussion . . . . . 1-75

1.A.32 Criterion 36 - Inspection of Emergency Core Cooling System. . . . . 1-76

1.A.32.1 Requirements . . . . . 1-76
1.A.32.2 Discussion . . . . . 1-76

1.A.33 Criterion 37 - Testing of Emergency Core Cooling System . . . . . 1-76

1.A.33.1 Requirements . . . . . 1-76
1.A.33.2 Discussion . . . . . 1-77

1.A.34 Criterion 38 - Containment Heat Removal . . . . . 1-78

1.A.34.1 Requirements . . . . . 1-78
1.A.34.2 Discussion . . . . . 1-78

1.A.35 Criterion 39 - Inspection of Containment Heat Removal System . . . 1-79

1.A.35.1 Requirements . . . . . 1-79
1.A.35.2 Discussion . . . . . 1-79

1.A.36 Criterion 40 - Testing of Containment Heat Removal System . . . . . 1-79

1.A.36.1 Requirements . . . . . 1-79
1.A.36.2 Discussion . . . . . 1-80

1.A.37 Criterion 41 - Containment Atmosphere Cleanup . . . . . 1-81

1.A.37.1 Requirements . . . . . 1-81
1.A.37.2 Discussion . . . . . 1-81

1.A.38 Criterion 42 - Inspection of Containment Atmosphere Cleanup Systems . . . . . 1-82

1.A.38.1 Requirements . . . . . 1-82
1.A.38.2 Discussion . . . . . 1-82

1.A.39 Criterion 43 - Testing of Containment Atmosphere Cleanup Systems . . . . . 1-82

1.A.39.1 Requirements . . . . . 1-82
1.A.39.2 Discussion . . . . . 1-83

1.A.40 Criterion 44 - Cooling Water . . . . . 1-83

1.A.40.1 Requirements . . . . . 1-83
1.A.40.2 Discussion . . . . . 1-84

1.A.41 Criterion 45 - Inspection of Cooling Water System. . . . . 1-86

1.A.41.1 Requirements . . . . . 1-86
1.A.41.2 Discussion . . . . . 1-86

1.A.42 Criterion 46 - Testing of Cooling Water System. . . . . 1-86

1.A.42.1 Requirements . . . . . 1-86
1.A.42.2 Discussion . . . . . 1-86

1.A.43 Criterion 50 - Containment Design Details . . . . . 1-87

1.A.43.1 Requirements . . . . . 1-87
1.A.43.2 Discussion . . . . . 1-88

1.A.44 Criterion 51 - Fracture Prevention of Containment Pressure Boundary . . . . . 1-88

1.A.44.1 Requirements . . . . . 1-88
1.A.44.2 Discussion . . . . . 1-88

1.A.45 Criterion 52 - Capability for Containment Leakage Rate Testing. . . 1-89

1.A.45.1 Requirements . . . . . 1-89
1.A.45.2 Discussion . . . . . 1-89

1.A.46 Criterion 53 - Provisions for Containment Testing and Inspection. . 1-89

1.A.46.1 Requirements . . . . . 1-89
1.A.46.2 Discussion . . . . . 1-89

1.A.47 Criterion 54 - Piping Systems Penetrating Containment . . . . . 1-90

1.A.47.1 Requirements . . . . . 1-90
1.A.47.2 Discussion . . . . . 1-90

1.A.48 Criterion 55 - Reactor Coolant Pressure Boundary Penetrating Containment . . . . . 1-90

1.A.48.1 Requirements . . . . . 1-90
1.A.48.2 Discussion . . . . . 1-91

1.A.49 Criterion 56 - Primary Containment Isolation. . . . . 1-92

1.A.49.1 Requirements . . . . . 1-92
1.A.49.2 Discussion . . . . . 1-92

1.A.50 Criterion 57 - Closed System Isolation Valves . . . . . 1-93

1.A.50.1 Requirements . . . . . 1-93
1.A.50.2 Discussion . . . . . 1-93

1.A.51 Criterion 60 - Control of Releases of Radioactive Materials to the Environment . . . . . 1-93

1.A.51.1 Requirements . . . . . 1-93
1.A.51.2 Discussion . . . . . 1-93

1.A.52 Criterion 61 - Fuel Storage and Handling and Radioactivity Control. 1-94

1.A.52.1 Requirements . . . . . 1-94
1.A.52.2 Discussion . . . . . 1-95

1.A.53 Criterion 62 - Prevention of Criticality in Fuel Storage and Handling. . . . . 1-95

1.A.53.1 Requirements . . . . . 1-95
1.A.53.2 Discussion . . . . . 1-95

1.A.54 Criterion 63 - Monitoring Fuel and Waste Storage . . . . . 1-96

1.A.54.1 Requirements . . . . . 1-96
1.A.54.2 Discussion . . . . . 1-96

1.A.55 Criterion 64 - Monitoring Radioactivity Release . . . . . 1-96

1.A.55.1 Requirements . . . . . 1-96
1.A.55.2 Discussion . . . . . 1-97

1.A.56 References . . . . . 1-98

APPENDIX 1-B - LOFT CORE I DESIGN PARAMETERS . . . . . 1-99

## FIGURES

1-1. Test Area North, NRTS . . . . . 1-31

1-2. LOFT test area . . . . . 1-32

1-3. Aerial view of LOFT test area . . . . . 1-33

1-4. LOFT assembly and hot shop area . . . . . 1-34

1-5. LOFT MTA quarter-scale model . . . . . 1-35

1-6. MTA and locomotive on turntable . . . . . 1-36

1-7. Isometric drawing of LOFT test facility . . . . . 1-37

1-8. Containment plan view (basement elevation) . . . . . 1-38

1-9. Containment plan view (elev. 4790 ft) . . . . . 1-39

1-10. Containment elevation cross section . . . . . 1-40

1-11. Plan view of MTA in containment vessel . . . . . 1-41

1-12. Primary coolant system plan . . . . . 1-42

## TABLES

1-I. Principal Design Characteristics of LOFT Facility . . . . . 1-7

1-B-I. LOFT Core I Design Parameters . . . . . 1-101

# 1.0 INTRODUCTION AND GENERAL DESCRIPTION OF FACILITY

## 1.1 Introduction

This report describes the final design and safety analyses of the as-built Loss of Fluid Test (LOFT) facility. The purpose of the report is to provide the Atomic Energy Commission (AEC) with sufficient information to enable a definitive evaluation by the staff in determining that an authorization to operate the facility can be issued without undue risk to the health and safety of the public. The construction of the LOFT facility was basically completed by the end of 1973. The experimental program is to commence by the latter part of 1974.

### 1.1.1 General Characteristics

The LOFT facility is designed for use in an Integral Test Program[1] which will consist of a series of loss-of-coolant experiments (LOCEs). In a typical LOCE, a loss-of-coolant accident (LOCA) will be simulated and the emergency core cooling system (ECCS) will be operated under either simulated or degraded performance conditions. The test program will consist of both nuclear and nonnuclear tests, with a blowdown loop simulating the rupture in the primary coolant system piping.

The initial experimental program for conducting LOCEs will perform primary system blowdowns to the blowdown suppression tank, which is designed to contain all of the fission products released during the experiment. The general ordering of these experiments will begin with the least probability for core-damaging tests and progress toward the more demanding experiments with increasing potential for higher fuel cladding temperatures and thus higher fission product release. Experiments with more demanding requirements and a potential for higher fuel cladding temperatures will only be conducted when the results from the previous tests are analyzed and the results incorporated into test predictions of the next series of experiments. Only after the blowdown phenomena and

the associated core fission product release are capable of being accurately predicted will blowdowns to the containment vessel be scheduled in the experimental program. In the event that containment blowdown experiments are included late in the experimental program, experimental planners will draw on prior experiments with ECCS to plan containment blowdown experiments with minimal fission product release. Since containment blowdown experiments would result in the largest radiological consequences, some of the radiological analyses presented are based on containment blowdown experiments to maximize the resulting exposures. Although a full safety analysis for containment blowdown experiments is not provided in this document, such an analysis would be performed prior to execution of such experiments.

The facility is located at the Test Area North (TAN) site of the National Reactor Testing Station (NRTS). (See Figure 1-1.) This site is well suited to the type of experimental studies planned for the LOFT Integral Test Program. As described in greater detail in Sections 1.2 and 3.0, the location uniquely satisfies site-related criteria such as low population distribution in the vicinity and a very low probability of the occurrence of floods, earthquakes, and tornadoes. Furthermore, the NRTS is a large, established nuclear reactor test site currently under AEC jurisdiction and control.

Principal components making up the LOFT facility are (a) a 55-MW(t) nuclear steam supply system (NSSS) mounted on a mobile test assembly (MTA), (b) a containment facility, and (c) various support buildings and facilities. The mobility of the NSSS makes it possible to move the NSSS to the hot shop area for removal of severely damaged fuel, for major modifications, and for unusual maintenance. A summary description of the facility is provided in Section 1.2.

### 1.1.2 Safety Assessment

Safe operation of the LOFT facility has been paramount in all aspects of the design and construction of plant systems and equipment and in the detailed planning for operation. Careful design, the selection of high-quality materials, the wide use of stringent RDT and industry standards, rigorous fabrication techniques, a strong quality assurance (QA) program, careful component acceptance procedures, systems operations testing, inservice inspection, comprehensive operator training and testing, extensive administrative safeguards, and exhaustive safety analyses of reactor operations combine to provide strong assurance that the facility can and will be operated safely. Three levels of confidence in the ability of the LOFT facility to be operated without undue risk to the health and safety of personnel and the public have been achieved. The three levels of confidence are summarized below; detailed bases are provided in pertinent subsections entitled "Special Features Having Safety Significance" and by analyses discussed in Section 15.0.

The first level of confidence derives from the fact that accidents can be prevented. In order to ensure the prevention of accidents, systems and components are designed so that the facility will be safe in all phases of operation with a maximum tolerance for errors, abnormal operation, and component malfunction.

Designs are in accordance with approved requirements as specified in design documents (i.e., component and system design descriptions -- CDDs and SDDs). The CDDs and SDDs provide the primary reference for each of the design descriptions presented in subsequent sections of this report. The requirements established in these design documents have been thoroughly reviewed and approved by Aerojet Nuclear Company (ANC) management and the AEC.

Accident prevention is further assured by providing quality, redundancy, testability, inspectability, and fail-safe features of the components in the reactor and the balance of the facility.

Maximum assurance is provided by conducting analyses and test programs to find those types of malfunctions or faults that could affect reliability of operation, and providing appropriate safeguards by design, QA, and fail-safe features.

The second level of confidence provides for protection against incidents of essential-equipment malfunctions or operator error that might occur in spite of the care taken in design, construction, and operation to prevent them. This additional level of protection for the operating staff and public is provided by reliable protective devices and systems designed to assure that such incidents will be prevented, arrested, or safely accommodated.

The requirements for protective systems are based on a spectrum of occurrences that could lead to abnormal operation which the plant design must safely accommodate. Conservative design practices, adequate safety margins, inspectability, and redundant detecting and actuating equipment are incorporated in the protective systems to assure their absolute effectiveness and reliability. In addition, these systems are designed to be routinely monitored and tested to provide full assurance that they will operate reliably if required.

As shown by the analyses contained in Section 15.0 and subsections of Sections 4.0 through 13.0 entitled "Special Features Having Safety Significance", the second level of confidence has been achieved in all elements of the facility. Thus, even if the facility is misoperated, or if equipment malfunctions occur, the plant protection systems (PPS) [Section 9.2] and engineered safety features (ESFs) [Section 7.0] prevent or minimize the release of fission products to the environment, generally far below the limits set forth in AEC Manual Chapter 0524[2].

The third level of confidence in the safety of the facility has been attained by analytically testing the design against incidents that are believed to be hypothetical or to have an extremely low probability of occurrence. In compliance with AEC Safety Guide 4[3] it was arbitrarily assumed that some accident could

cause the release of substantial fractions of the total fission product inventory in the reactor core. Then employing conservative assumptions relative to meteorological conditions and fission product transport, it was shown that release of such a substantial fraction of the fission product inventory would result in no human exposures in excess of the guideline values of 10 CFR Part 100[4]. (See Section 15.0.)

In summary, the overall assessment of the safety of the LOFT facility is as follows:

(1) The facility -- as designed, constructed, and tested, and as it will be operated and maintained -- provides for reliable and predictable operation and an inherent capacity to prevent accidents.

(2) The facility is designed so that in the event of errors, malfunctions, or abnormal conditions, the protective systems and other ESFs will arrest the event or limit its consequences to defined and acceptable levels.

(3) Considerable margin exists in the LOFT design and plans for operation, which is established by hypothesizing fission product releases greater than believed credible and showing that, even with this level of release, the consequences to the surrounding area are substantially lower than the guideline values stated in 10 CFR Part 100.

## 1.2 General Plant Description

This section summarizes the principal characteristics of the LOFT facility site and its environs, and provides a concise description of the facility, including principal design criteria, operating characteristics, and safety considerations. Compliance with the AEC General Design Criteria is discussed in Appendix 1-A. Appropriate references are indicated for supporting detailed information.

### 1.2.1 Principal Design Criteria

The LOFT facility is designed to perform a series of LOCEs in which a LOCA is simulated and the ECCS is operated under

either simulated or degraded performance conditions. The LOFT Integral Test Program[5] includes both nuclear and nonnuclear tests that use a blowdown loop to simulate ruptures in the primary coolant system piping. The basic objectives of the test program are:

(1) To evaluate the adequacy of analytical methods to predict the accident response of large power reactors, the performance of ESFs, and the margins of safety inherent in that performance

(2) To identify any unexpected events or thresholds exhibited in the response of either the plant or the engineered safety systems and develop analytical techniques that adequately describe and account for the unexpected behavior

(3) To provide experience in the development and application of standards and codes generally applicable to pressurized water reactors (PWRs) by their development and use on LOFT.

Accordingly, the LOFT facility as designed and constructed can be operated to simulate, as closely as practical, the behavior of multiloop PWR nuclear powerplants under LOCA conditions.

Principal characteristics of the LOFT facility are listed in Table 1-I. Additional specific characteristics are tabulated in Appendix 1-B and in each section of this document.

In the design and construction of the LOFT facility, certain design requirements were established so that the completed facility would be representative of large pressurized water reactors (LPWRs). A summary of these design requirements follows. Additional details are provided in the LOFT Program Requirements Document[5]. The facility is required to provide:

(1) An experimental PWR NSSS with the necessary generic design features -- built with appropriately accepted, well-specified engineering standards, as well as typical materials and methods of construction so that its loss-of-coolant performance and its design life is representative of LPWRs

TABLE 1-I

PRINCIPAL DESIGN CHARACTERISTICS OF LOFT FACILITY

| Item | Parameter | Value or Description |
|---|---|---|
| 1. | Rated power, MW(t) | 55 |
| 2. | Design pressure, psia | 2500 |
| 3. | Design temperature, °F | 650 |
| 4. | Total coolant flow, lb/hr | $2.15 \times 10^6$ to $4.67 \times 10^6$ |
| 5. | Coolant temperature, nominal inlet, °F | 544 to 557 |
| 6. | Average coolant temperature rise in vessel, °F | 40 to 67 |
| 7. | Maximum linear power, kW/ft | 19.0 |
| 8. | Reactor core | |
| | a. Fuel type | Sintered $UO_2$ |
| | b. Fuel cladding | Zircaloy-4 |
| | c. Fuel rod OD, in. | 0.422 |
| | d. Equivalent core diameter, in. | 24 |
| | e. Active core length, ft | 5.5 |
| 9. | Control rod assemblies | |
| | a. Neutron absorber | Ag-In-Cd alloy |
| | b. Number of clusters | 4 |
| | c. Control rods/cluster | 20 |
| 10. | Fuel assemblies | |
| | a. Number of 15 x 15 square assemblies | 5 (1 center, 4 outside) |
| | b. Number of 12 x 12 triangular assemblies | 4 (corners) |
| 11. | Core life, EFPH | 2000 |
| 12. | Primary coolant system | |
| | a. Reactor vessel: | |
| | Material | Carbon steel clad with stainless steel |
| | Overall height, in. | 283 |
| | Number of coolant nozzles: | |
| | Inlet | 2 |
| | Outlet | 2 |
| | ECCS injection | 3 |
| | Number of coolant loops | 1 plus blowdown loop |
| | Total volume, $ft^3$ | 272 |
| | Piping material | Stainless steel |
| | b. Steam generator | One vertical U-tube unit |
| | c. Coolant pumps | Two canned rotor units |
| | d. Pressurizer | One 34-$ft^3$ unit |
| 13. | Containment vessel | |
| | a. Type | Steel cylinder with hemispherical top head and torospherical bottom head |
| | b. Inside diameter, ft | 70 |
| | c. Height, ft | 129 |

(2) The capability to control initial conditions and events in the LOCA sequence considered important to simulating the behavior of LPWRs

(3) Design, construction, and operation characteristics that are in accordance with an established plan, consisting of the necessary baseline and supporting documents, approved by the AEC

(4) The capability to withstand a minimum of 26 LOCEs (blowdowns) as required by the LOFT Integral Test Program

(5) The capability to replace and/or requalify systems and components of the NSSS and its functional/safety auxiliaries after each test in a manner consistent with the efficient utilization of time and resources and at any time during this operational period

(6) A capability to acquire experimental data needed to fulfill the information requirements of the LOFT Integral Test Program, including pretest characterization, steady state and transient measurements, and posttest examination

(7) A capability to accept (with modifications) core lengths up to 12 ft.

### 1.2.2 Site Characteristics

The LOFT facility is situated within the NRTS at the TAN facilities, approximately 27 miles north-northeast of the Central Facilities Area (CFA). The NRTS is located in southeastern Idaho on the Snake River Plain at the southern foot of the Lemhi, Lost River, and Beaverhead-Centennial mountain ranges. The NRTS was established in 1949 as a remote station for USAEC activities in building, operating, and testing nuclear reactors. To date, 50 different reactors have been constructed at the station, although many of these have completed their mission and are currently decommissioned.

The station is known for its remoteness, being 30 miles from the nearest community of size (Idaho Falls, Idaho). The 894-$mi^2$

area comprising the station is irregular in shape, with the widest dimensions measuring 39 miles north to south and 36 miles east to west. Northwest of the station and across the plain to the southeast, long, deep valleys, oriented northwest-southeast, drain onto the plain. Drainage from the north is from the virtually unbroken barrier of the Beaverhead-Centennial ranges, part of the Continental Divide.

Streams do not cross the NRTS but run into playas or sinks located in the north-central section of the station. During the late spring runoff, the water from these streams usually comes no closer than 2 miles from the LOFT site, although under abnormal conditions, the spring runoff has approached the LOFT site. Flood control facilities have been constructed in the LOFT area to prevent flooding of the LOFT facility. These flood control facilities consist of low dikes and interconnected drainage ditches.

No severely destructive earthquakes have affected the eastern part of the Snake River Plain since establishment of towns in the early 1860s. Of the recorded earthquakes in Idaho, none was of sufficient intensity to cause more than minor damage to buildings. The probability of an earthquake of sufficient magnitude to cause damage to the LOFT Integral Test System is extremely low, since conservative earthquake loads are considered in the structural design of critical components.

The meteorological conditions at the NRTS have been studied in detail, and descriptions are available in numerous previous reports (see references in Section 3.0).

Continuous radiological surveillance of air, water, milk, wheat, and external radiation is conducted at the NRTS and surrounding communities. A detailed description of the site and environment is provided in Section 3.0.

### 1.2.3 Facility Layout

The TAN area, originally built for the Aircraft Nuclear Propulsion (ANP) program was constructed specifically to accom-

modate mobile reactor test assemblies. Test facilities were built approximately 1-1/2 miles from the assembly and shop areas. A heavy-duty four-rail railroad track joins the two areas. The LOFT MTA, containing the experimental NSSS, can be moved over this track between the containment vessel and the assembly and hot shop area.

Major features of the test area, shown in Figure 1-2, include the containment vessel, control and equipment building, stack and tank buildings, electrical equipment within the LOFT hangar, water wells, liquid waste disposal pond, and railroad system. An aerial view of the test area (near the end of the construction) is shown in Figure 1-3. The assembly and hot shop area, shown in Figure 1-4, includes the assembly and maintenance building, hot cell area, fuel storage and assembly area, railroad system, and other support facilities. The MTA was initially assembled in the assembly and maintenance building, then moved via rail to the containment vessel for testing. Refueling and inspection between tests is normally done in the containment vessel; however, the MTA may be moved to the hot cell for major maintenance or examination and refurbishment if required. Figure 1-5 shows the one-quarter-scale model of the MTA, and Figure 1-6 shows the MTA and shielded locomotive on the railroad turntable while being moved to the containment vessel.

Figure 1-7 shows an isometric illustration of the LOFT test facility, and Figures 1-8 through 1-11 illustrate the arrangement of equipment within and about the containment vessel.

### 1.2.4 Nuclear Steam Supply System

The NSSS includes the reactor system, the primary coolant system (with an integrated experimental blowdown system), and the steam generator portion of the secondary coolant system, all mounted on the MTA. A radiation shield tank, which provides both neutron and gamma shielding from the reactor vessel, is mounted integrally with the MTA support frame and also serves to support the reactor vessel. The

installed PWR-type system is representative of current-generation commercial LPWR powerplants to the maximum extent practicable and is designed with capability to fulfill the experimental program objectives outlined in Section 2.1 and detailed in Reference 5.

The reactor, primary coolant, secondary coolant, and blowdown systems are briefly described below.

1.2.4.1 Reactor System

Rated reactor power is 55 MW(t) with sufficient design margins to accommodate transient operation and instrument error without damage to the core and without exceeding the pressure at the safety valve settings in the primary coolant system. Reactivity control is provided by control rod assemblies (CRAs) and soluble boron in the coolant. Sufficient CRA worth is available to shut down the reactor ($k_{eff} \leq 0.99$) in the hot condition at any time during the life cycle with the most reactive CRA stuck in the fully withdrawn position. Redundant equipment is provided to add soluble boron to the reactor coolant to ensure a similar shutdown capability when the reactor coolant is cooled to ambient temperatures.

The reactivity worth of individual CRAs, and the rate at which reactivity can be added, is limited to ensure that credible reactivity accidents cannot cause a transient capable of damaging the primary coolant system or causing significant fuel failure.

A description of the major reactor system components follow. A detailed description of the reactor system is presented in Section 4.0.

1.2.4.1.1 Reactor Internals

The reactor internals are designed to support and properly position the reactor core fuel

assemblies, and control and direct coolant flow through the core during normal operating and expected LOCE conditions. Reactor vessel filler assemblies displace excess coolant to provide an appropriate ratio of reactor vessel coolant volume to the primary system coolant volume.

1.2.4.1.2 Reactor Core

The core is comprised of an array of five standard 15 x 15 LPWR fuel assemblies in a cross arrangement with four triangular-shaped fuel assemblies located at the corners of the cross to form a core approaching a right cylinder. Three fuel assembly designs are required: (a) standard 15 x 15 fuel pin array assemblies, (b) 15 x 15 assemblies containing control rod clusters, and (c) triangular-shaped corner assemblies (right triangle with 12 pins on each perpendicular side).

The fuel assemblies are designed to:

(1) Provide a thermal-hydraulic and mechanical response during planned LOCEs similar to that postulated in an LPWR LOCA
(2) Accommodate instrumentation to measure conditions before and during LOCEs
(3) Operate with a fuel pin peak linear heat rate of 19.0 kW/ft without exceeding a reactor thermal power output of 55 MW(t)
(4) Maintain fuel pin integrity, test instrumentation calibration, and LOCE response capability for several tests.

The fuel pin materials and dimensions are typical of those in most LPWRs except for

length, which has been shortened to 5.5 ft compared with the commercial standard of about 12 ft.

1.2.4.1.3 Control Rod Assemblies

Four CRAs, typical of those used in current LPWRs, are located in the fuel assembly positions surrounding the central assembly.

The control rod drives are sealed, synchro-pulse, motor-driven roller nut units. The drive mechanism consists of a motor tube which houses a leadscrew and its rotor assembly and a buffer which provides damping action for the control rod motion during a trip. A motor stator is placed down over the motor tube pressure vessel, and position indication switches are arranged outside the motor tube extension. The control rod drive output element is a translating screw shaft coupled to the control rod. The screw is driven by an antifriction nut element, which is rotated magnetically by the motor stator.

1.2.4.2 Primary Coolant System

The primary coolant system transfers heat generated from the reactor core to the secondary coolant. The system consists of the reactor vessel, the tube side of the steam generator, the primary coolant pumps, the pressurizer, the flow-measuring element, and the interconnecting piping. A primary coolant system layout plan is shown in Figure 1-12; a detailed description is presented in Section 5.0.

The primary coolant system provides a boundary for containing the coolant under operating temperature and pressure conditions. The system confines radioactive

material and limits, to acceptable values, the release of radioactivity to the secondary coolant system and to other parts of the plant under conditions of either normal or abnormal reactor behavior. The primary coolant system pressurizer accommodates coolant volume changes expected during operating transients.

The reactor vessel is a scaled-down version of a typical LPWR vessel. Certain dimensional characteristics have been emphasized on the basis of LOCA analyses to assure that experimental data obtained will be applicable to commercial-size LPWRs. The volume ratio of the reactor vessel coolant to that of the total primary system was considered to be of single most importance. Other significant considerations included (a) the volume ratios of water in the inlet and outlet plenums to that in the core and (b) the downcomer annulus thickness. Inlet and outlet coolant penetrations are typical of most LPWR vessels. In-vessel instrumentation and control rod penetrations are supported from the top head to allow removal of individual fuel elements with their integral instrumentation without disturbing the remainder of the internals.

The total coolant volume is sized to give approximately the same reactor-power-to-system-volume ratio as that of generic LPWR systems. Fractional system volumes of the components in the primary coolant system, including the piping, approximate those of LPWR systems. The length of piping between components was based on the stress requirements.

The primary coolant system configuration is also representative of LPWR systems. For example, the cold and hot leg reactor vessel nozzles are in the same horizontal plane and located above the core, the steam generator is above the primary coolant system piping,

and the discharge nozzles of the primary coolant pumps are in the same horizontal plane as the reactor vessel main loop nozzles.

1.2.4.3 Secondary Coolant System

Power dissipation from the reactor coolant to the environment during operation of the LOFT reactor is provided by a secondary coolant system. In the steam generator, heat is transferred from the reactor coolant to produce steam on the shell side. The steam is piped through a steamflow control valve to an air-cooled condenser, where it is condensed. Heat is dissipated to the atmosphere by airflow across finned tubes in the condenser, and the steam condensate is collected in the condensate receiver. The condensate is then subcooled 10°F and pumped back into the steam generator.

A detailed description of the secondary coolant system is presented in Section 12.0.

1.2.4.4 Blowdown System

The LOFT blowdown loop provides a system, separate from the primary coolant system, that permits simulation of the significant thermal and hydraulic processes associated with LOCA-ECC injection in an LPWR. The basic functions of the blowdown system are:

(1) To initiate LOCEs by reliable and repeatedly simulating various sizes and types of pipe breaks
(2) To simulate two- and four-coolant-loop LPWR LOCAs including simulation of major primary loop components
(3) To quench, contain, and reclaim blowdown effluent; to provide a reservoir of borated coolant and primary coolant; and to monitor the distribution of fission products during and after blowdown.

The functions in item (3) are performed by the blowdown suppression portion of the blowdown system, located off the MTA. Blowdown suppression functions are described in Section 11.0, and the blowdown system is described in Section 5.0.

The blowdown loop is connected to the reactor vessel through two 14-in. nozzles (cold leg and hot leg). The outlet hot leg piping is reduced appropriately to simulate either a 2- x 4-loop or a 4- x 4-loop LPWR, and appropriate volume and flow resistances are included to simulate a steam generator and pump. Blowdown is initiated by operation of quick-opening valves located downstream of loop isolation valves.

In the event of a LOFT LOCA, a reflood assist bypass system (physically a part of the blowdown system) allows LOFT to reflood at essentially the same rate as an LPWR. This is achieved by opening a steam vent path parallel to the operating loop that connects the 14-in. portion of the blowdown hot leg to the 14-in. portion of the blowdown cold leg.

### 1.2.5 Containment Vessel

The containment vessel is a 70-ft-ID vertical cylinder with a hemispherical top head and a torospherical bottom head. A gastight steel membrane separates the test chamber portion of the containment vessel from the basement portion of the vessel, where storage sumps and support equipment are housed. The test chamber houses the MTA, a circular crane, and other support equipment. A 33-ft-high-by-22-ft-wide opening in the containment vessel allows passage of the MTA into and out of the containment vessel. This opening is sealed during normal reactor operations and during the conduct of experiments by a large door with dual pneumatically inflated seals. The containment design is described in detail in Section 6.0.

### 1.2.6 Engineered Safety Features

The ESFs, described in detail in Section 7.0, include the ECCS (high-pressure pumped coolant injection, intermediate-pressure accumulator coolant injection, and low-pressure pumped coolant injection), reflood assist bypass system, and the containment vessel isolation system.

ESFs fulfill two functions during a LOCE or in the unlikely event of a LOCA in the LOFT system: (a) they protect the fuel cladding from extensive damage that would interfere with core cooling, and (b) they minimize the leakage of fission products from the containment vessel. Emergency injection of coolant to the primary coolant system satisfies the first function; isolation of the high-quality containment shell satisfies the second. Each of these operations is performed by systems that employ redundant components to ensure operability. All safety equipment requiring electrical power for operation is supplied by redundant power sources.

### 1.2.7 Support Buildings and Facilities

The support buildings and facilities are briefly described below. A description is presented in Section 8.0.

#### 1.2.7.1 Service Building

The service building contains the electrical control panels, the heating and ventilating (HV) equipment, a chemical mix area, ECCS equipment, railroad door moving equipment, and electronic preconditioning equipment. This building also provides an enclosed instrumentation, electrical, and piping penetration coupling station and houses electronic instrumentation, preamplifiers, and cold junction equipment.

#### 1.2.7.2 Control and Equipment Building

The control and equipment building houses the control room, visitors' area, experimental data recording and

display area, the operational radiological sample counting area, and operations support rooms. This building also contains the fire protection equipment, the boilers and a 1000-kW diesel generator, an electrical equipment room, and a general equipment room. A constant air monitor (CAM) is located in the air intake plenum of this building to detect any increase in air activity. In the event of an increase in air activity, the CAM will alarm and action will be initiated to isolate the air intake if the activity exceeds preestablished guidelines.

The control room houses the reactor controls and associated equipment for reactor operations and for conducting experiments. The plant radiation monitoring equipment annunciates in the control area so that corrective action can be initiated. Adequate earth cover is provided to shield operating personnel from direct radiation during experiments or any postulated accident.

1.2.7.3 Hangar Building

The hangar building houses most of the vital power supply equipment, including redundant battery banks, two motor-generator (MG) sets, and a 500-kW diesel generator.

1.2.7.4 Technical Support Facilities

The Technical Support Facilities (TSF), located at TAN-607 and TAN-633, provide areas for all phases of assembly, maintenance, repair, disassembly, and examination of systems and components that cannot be performed at the LOFT facility.

1.2.7.5 Fuel Assembly and Storage Area

The fuel assembly and storage area, located at TAN-615, is provided for the assembly and storage of new, unirradiated fuel.

#### 1.2.7.6 Railroad System

A four-rail track runs from the support facilities area, via a turntable, to the containment vessel. A shielded locomotive is used to transport the MTA between areas.

### 1.2.8 Instrumentation and Control Systems

The instrumentation and control (I&C) systems consist of those indications, alarms, and controls -- similar to those used in utility nuclear powerplants -- that are necessary for the startup, heatup, power operation, and shutdown of the reactor plant and support equipment, In addition to those indications and controls necessary for plant operations, the reactor systems are extensively instrumented to provide experimental plant performance data during plant design testing and during the planned LOCEs. The I&C systems include the PPS, the nuclear instrumentation system, primary coolant system instrumentation and control, secondary system instrumentation and control, a data acquisition and visual display system, radiation detection instrumentation, and a test assembly measurements system. A detailed discussion of the I&C systems is provided in Section 9.0.

### 1.2.9 Electrical Systems

The electrical power distribution system consists of the following:

(1) The commercial power system distributes and controls facility power from energy sources supplying the NRTS through high-voltage transmission lines.

(2) The vital power system supplies, distributes, and controls emergency power within the facility. In an emergency , vital power is supplied initially from two separate and redundant battery-powered MG sets with backup from two diesel-engine-driven generators.

The electrical power distribution system provides adequate commercial power to the reactor plant and support facilities

as required during all phases of plant operation. In addition, the system provides reliable vital power to equipment and devices as required to shut down the reactor, limit the release of radioactive material, and provide adequate information regarding the status of the reactor and facility in the event of a complete loss of commercial power.

The system provides automatic and manual controls to select the most suitable power supply for distribution to essential loads during either normal or abnormal operation of the system. Vital power is continuously available during normal reactor operation and experimental testing so as to prevent the occurrence of a power outage to essential loads upon loss of the commercial power source. That portion of the system supplying power to the PPS is designed in accordance with RDT Standard C 16-1T[6].

A detailed discussion of the electrical systems is provided in Section 10.0.

### 1.2.10 Auxiliary Systems

The auxiliary systems required for the reactor and support equipment during normal operation and following a blowdown experiment, described in detail in Section 11.0, are summarized below.

#### 1.2.10.1 Purification and Sampling Systems

The purification system is a high-pressure, low-temperature, bypass-flow, ion-exchange system. The system, which is located entirely on the MTA, removes solid impurities from the coolant, maintains appropriate purity and chemistry, removes residual heat, and drains water from the primary coolant system. The purification system includes a purification pump, a regenerative heat exchanger (RHX), a nonregenerative heat exchanger (NRHX), an ion-exchange vessel, and a filter.

The sampling system provides a means for collecting and analyzing coolant samples from the LOFT facility. Samples from the primary coolant and ion exchanger effluent are collected in an enclosed sampling sink. This sampling sink vents to an exhaust system which is designed to accommodate radioactive effluents. The samples taken at the sampling sink, by means of sample bombs, are analyzed in an adjoining sample analysis room.

1.2.10.2 Primary Coolant Addition and Control System

The primary functions of the primary coolant addition and control system are to add borated coolant at controlled rates and concentrations to the primary coolant system, and to provide ECCS high-pressure injection as required. The major components of the system are a boric acid mix tank, a boric acid transfer pump, two charging pumps, a batch tank, and a chemical addition vessel. Because of its high-pressure-injection ECCS function, the system includes redundant instrumentation and remotely operated valving and pumping paths.

1.2.10.3 Component Cooling Water System

The component cooling water system provides the chemically treated water compatible with the materials of the primary system components in order to minimize corrosion and deposition. The off-dolly portion of the component cooling water system is located in the containment vessel basement.

The system is provided with two circulating flow paths, each sized for the maximum flow and heat removal requirements. An elevated surge tank provides for coolant expansion, makeup capability from the demineralized water system, and chemical treatment addition.

1.2.10.4 Plant, Instrument, and Breathing Air System - Instrument Air and Gas System

The plant, instrument, and breathing air system provides air for the equipment and instrumentation and provides air for the personnel breathing air manifolds. The instrument air and gas system, as part of the PPS, is divided into two separate and redundant supply systems which furnish air or gas to control valve operators that are part of the PPS.

The air source for the plant, instrument, and breathing air is supplied by a 785-scfm (at 190 psig) air compressor and an auxiliary 38-scfm compressor. The air supplied by these compressors is cooled and passed through a water separator, an oil vapor remover, and air dryers before being used. Two air receiver tanks are provided for storage of instrument air. The air receivers include (a) a 1350-$ft^3$ storage tank, which stores 125-psig air, and (b) a 750-$ft^3$ storage tank, which stores air at 190 psig.

1.2.10.5 Steam, Condensate, and Boiler Feedwater System

The steam, condensate, and boiler feedwater system provides the necessary utility steam to the plant operational equipment for the conduct of the LOFT experimental program. Steam is supplied to the LOFT Integral Test System by two low-pressure (12-psig) boilers rated at 300 hp. One of these boilers takes combustion air from outside the building to ensure boiler operation in the event the building housing the boilers is isolated from the outside atmosphere.

1.2.10.6 Communications, Emergency Warning, and Plant Surveillance Systems

The communications, emergency warning, and plant surveillance systems provide voice communications

throughout the facility. The systems also provide outside-area fire alarms, a fire alarm supervisor system to indicate when abnormal conditions exist, and an evacuation alarm system. In addition to these systems, a television (TV) system provides surveillance of the containment vessel test chamber interior and of the MTA. The TV system also has video recording capability as discussed in Section 6.0.

1.2.10.7 Heating and Ventilating System

The LOFT HV system includes (a) four subsystems for the control and equipment building, (b) three subsystems for the service building, and (c) a subsystem for potential radioactively contaminated areas.

The subsystems for the control and equipment building and the service building are designed to provide heating, ventilating, cooling where required, fresh air change, and radioactive contamination control. The subsystems are independent and are operated to provide space pressurization as required to minimize the spread of radioactive contamination. The space pressurization for areas with minimal potential for becoming radioactively contaminated is designed to be at a higher pressure than areas likely to become contaminated. In addition to pressure control, the air from the areas likely to become radioactively contaminated will be filtered and exhausted.

1.2.10.8 Decay Heat Removal Systems

Plant cooldown is considered as a two-step process: (a) reduction of the reactor coolant temperature from the hot condition to approximately 350°F and (b) reduction from approximately 350°F to ambient. For both temperature ranges, cooldown modes using various combinations of existing equipment are available for

normal, upset, emergency, and faulted conditions (faulted conditions considered only for temperatures >350°F). The particular cooldown mode used depends on the nature of the condition encountered and the previous operating state of the reactor. For temperatures >350°F, these modes primarily include either normal forced circulation of the primary system, natural circulation of the primary system, or use of portions of the ECCS. For temperatures <350°F, the modes primarily include forced circulation using either the purification system and the NRHX or the low-pressure injection pumps and the low-pressure heat exchanger.

1.2.10.9 Fuel Handling System

The fuel handling system includes (a) a new fuel storage and assembly area for dry storage of new fuel assemblies and for the assembled fuel modules, and (b) a spent fuel storage area for retention, handling, and transfer of irradiated fuel. The system is designed to minimize the possibility of fuel assembly damage and/or fission product release. Appropriate spacing precludes criticality.

1.2.10.10 Water Systems

Water is supplied by two 1000-gpm, 300-ft TDH deep well pumps and is chlorinated before entering the 480,000-gal abovegrade storage tank. The water from the storage tank supplies the domestic and service water system, the softened and demineralized water system, and the fire protection system.

1.2.11 Waste Systems

The waste systems handle radioactive and chemical liquid waste, radioactive gaseous waste, and solid waste. These systems are described in detail in Section 13.1.

1.2.11.1 Radioactive and Chemical Liquid Wastes

The liquid waste generated during the LOFT tests derives from a variety of sources, with each source producing waste containing mixtures of different chemical compositions and levels of radioactive contaminants. Because of the different types of waste and because of the restrictions imposed by the AEC for disposing of radioactive and chemical wastes, three different levels of waste disposal systems have been established: (a) System A - high-level radioactive waste, (b) System B - low-level radioactive and chemical waste, and (c) System C - cold waste (noncontaminated).

In System A, wastes that are anticipated to contain radioactive nuclides or chemicals that exceed the limits for waste disposal to surface ponds are collected in shielded storage tanks. When necessary, the waste is trucked to onsite facilities for evaporation, calcination, and long-term storage.

System B collects low-level radioactive and chemical waste, which meets drinking water standards, and pumps it to a disposal pond, where most of the waste infiltrates into the soil.

The cold waste system, System C, is a service water system which provides cooling water for nonradioactive or nonchemical systems. Therefore, this water cannot contain radioactive or chemical contaminants. This waste is cycled to an existing injection well.

1.2.11.2 Gaseous Wastes

The gaseous waste produced during the conduct of a LOFT experiment is in the form of radioactive contaminants, chemical contaminants, and waste heat. Radioactive gases produced in the primary system will be vented to the blowdown suppression tank, where

the gases may be stored before release. These gases will be filtered prior to release through the 150-ft stack to the outside atmosphere. The filter system used will include high-efficiency particulate air (HEPA) filters and charcoal adsorbers. The gases will be released under selected and monitored meteorological conditions to minimize the resulting offsite exposure.

1.2.11.3 Solid Wastes

Some of the solid wastes resulting from the LOFT experiments will be radioactive. Typical solid wastes to be handled include used contaminated equipment that requires replacement, spent ion-exchange resins, and other materials. These solid wastes will be packaged and shipped to a controlled area designed for storage of solid radioactive waste.

1.2.12 Radiation Protection System

The radiation protection system, described in detail in Section 13.2, monitors radiation levels in occupied areas, monitors liquid and gaseous effluents, and provides a shielding system for potential radiation sources. Monitoring and shielding systems are designed to perform the following functions:

(1) To ensure that during normal plant operations and a planned blowdown test, the radiation exposure to the operating personnel and the general public is within the limits established in AEC Manual Chapter 0524

(2) To provide the necessary protection for operating personnel to terminate a reactor accident without excessive radiation exposures to themselves and the general public

(3) To document the release of radioactive effluents from the facility in accordance with ID Manual Appendix 0510[7].

The plant radiation monitoring system provides a continuous indication of the radiation levels within the facility to alert personnel whenever air contamination, effluent release, or

localized radiation reaches levels above established guidelines for personnel or release to the environment. The system also provides fission product release data during blowdown experiments.

The facility shielding protects personnel and equipment from excessive radiation exposure, minimizes neutron activation of equipment, and limits dose rates outside the containment. The shielding was designed using recommended exposure limits (AEC Manual Chapter 0524) in conjunction with calculated source strengths and estimated exposure durations at various locations.

## 1.3 Research and Development Programs

Several research and development programs have been carried out specifically to provide a sound technical basis for the final LOFT facility design and to demonstrate the conservatism of this design. Numerous other AEC-sponsored and industry programs have contributed heavily to the LOFT design, even though they were conducted primarily for other purposes. Those programs of primary importance in establishing and characterizing the final LOFT design are discussed briefly in this section. The LOFT program documents[5,8] contain additional discussions of related research and development programs, particularly with regard to the development and verification of computer codes and analysis and measurement techniques.

### 1.3.1 Requalification and Posttest Fuel Examination Program

Following the conduct of planned LOCEs in LOFT, it is necessary to determine if the fuel modules can be reused in subsequent test(s). W. J. Wachter and Associates is presently developing a posttest examination program[9] comprised of nondestructive and destructive examinations to characterize in detail the condition of tested fuel modules. When completed, the examination program developed will be submitted to the AEC.

### 1.3.2 Fuel Assembly Design Verification

To verify that the thermal, hydraulic, and mechanical characteristics of the LOFT fuel assemblies meet design objectives, Exxon Nuclear Company is conducting tests to obtain information in the following areas:

(1) Intersection joint strength of spacer grids
(2) Comparison of spacer grid intersection joint strength for brazed and welded joints
(3) Diffusion resistance weld for grid spacer-guide tube attachment
(4) Experimental strength determination of overall fuel assembly
(5) Instrumented fuel rod thermal cycling and corrosion behavior
(6) Departure from nucleate boiling (DNB) in presence of thermocouple sheathing
(7) Flow mixing in presence of thermocouple sheathing
(8) Assembly flow distribution by laser Doppler velocimeter
(9) Fretting corrosion and pressure drop measurements
(10) Control rod cluster drop measurements.

The results of these tests will be reported to the AEC upon completion.

### 1.3.3 Quick-Opening Blowdown Valves

Tests were conducted by Consolidated Controls Corporation to determine the subcooled decompression response characteristics of the quick-opening valves in the blowdown system. These valves initiate the blowdown during LOCEs, and their response characteristics must be known to adequately analyze the experimental results obtained. Results of tests[10] on two valve assemblies under various operating conditions show that the response characteristics meet design specifications, and the valves have been accepted by ANC for use in LOFT.

### 1.3.4 Primary Coolant Pumps

Tests[11,12] are being conducted by Combustion Engineering,

Inc., to qualify the LOFT primary coolant pumps for representative service conditions. Test objectives are:

(1) To demonstrate satisfactory normal steady state operation
(2) To demonstrate variable-speed operation
(3) To determine pump conditions after subcooled depressurization, saturated blowdown, and very slow rotation in superheated steam.

The results of these tests will be submitted to the AEC upon completion.

### 1.3.5 Core Flow Distribution

Hydraulic flow model tests[13] have been performed by Combustion Engineering, Inc., on a two-thirds-scale model of the LOFT reactor. The test objectives were:

(1) To determine the hydraulic suitability of the primary coolant flow channel configuration in the inlet distributor, downcomer, lower plenum, and lower core support structure
(2) To determine the effectiveness of the lower support structure design in providing a uniform distribution of coolant flow to the fuel pins.

Preliminary results[14] indicate that (a) the inlet flow distribution is uniform on a fuel bundle basis and (b) local flow peaking occurs at the core inlet plane due to the flow hole pattern in the core mounting plate.

Final test results will be submitted to the AEC upon completion.

## 1.4 References


1. Idaho Nuclear Corporation, Nuclear Safety Program Division, "LOFT Integral Test Program Development" (June 1971).

2. U. S. Atomic Energy Commission, AEC Manual, Chapter 0524, "Standards for Radiation Protection".

3. Idem, Division of Reactor Standards, "Safety Guides for Water Cooled Nuclear Power Plants".

4. Idem, Code of Federal Regulations, Title 10 - Atomic Energy, Part 100, "Reactor Site Criteria".

5. Aerojet Nuclear Company, Nuclear Safety Program Division, "LOFT Program Requirements Document", PRD-1D (May 1972).

6. Idem, Division of Reactor Development and Technology, RDT Standard C 16-1T, "Supplementary Criteria and Requirements for RDT Reactor Plant Protection Systems" (December 1969).

7. Idem, Idaho Operations Office, ID Manual, Appendix 0510, "Prevention, Control, and Abatement of Air and Water Pollution".

8. Idem, "LOFT Measurement Requirements Document", MRD-1 (June 1972).

9. Aerojet Nuclear Company, Subcontract S-7638 to W. J. Wachter and Associates, "A Detailed 'LOFT Requalification and Posttest Fuel Examination Program'" (1973).

10. Aerojet Nuclear Company, Internal Correspondence, Technical Coordination Trip Reports and Telecon Record; RJR-5, -7, -8, -9, and -11-73 (September 14 through October 26, 1973).

11. Aerojet Nuclear Company, Subcontract S-7079 to Combustion Engineering, Inc., "Qualification Tests of LOFT Primary Coolant Pumps" (1973).

12. Letter, H. M. Payne, Combustion Engineering, Inc., to F. J. Kriz, Aerojet Nuclear Company, "September, 1973 Progress Report on Subcontract S-7079" (October 15, 1973).

13. Combustion Engineering, Inc., "LOFT Reactor Vessel Flow Model Test Program", CENPD-96 (March 1973).

14. Letter, F. V. Rossano, Combustion Engineering, Inc., to R. L. Drexler, Aerojet Nuclear Company, "Subcontract S-7079, Task 5, Preliminary Data", CE-570 (September 28, 1973).

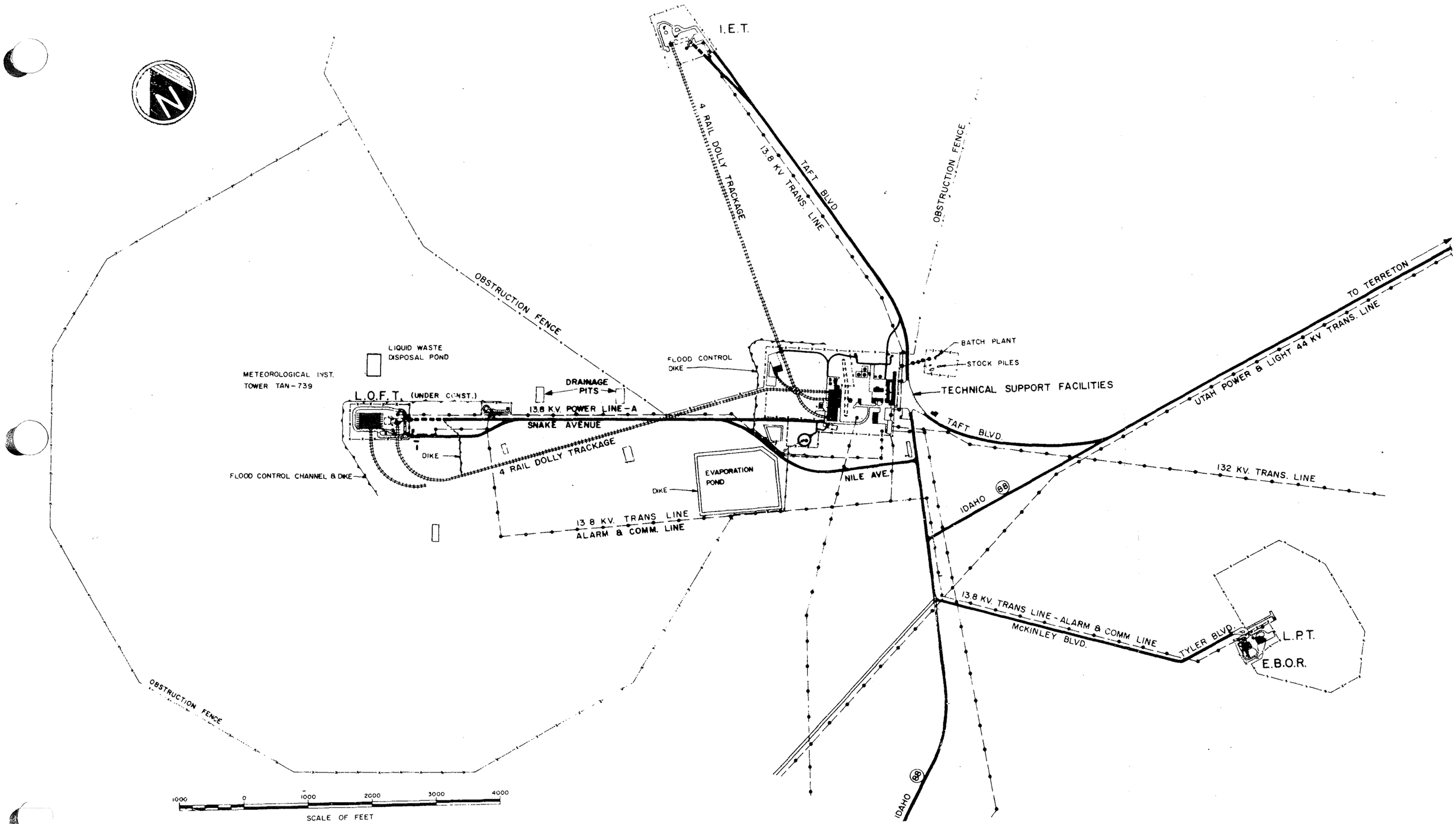


FIG. 1-1 TEST AREA NORTH, NRTS.
(111-1DO-9-5, MOD)

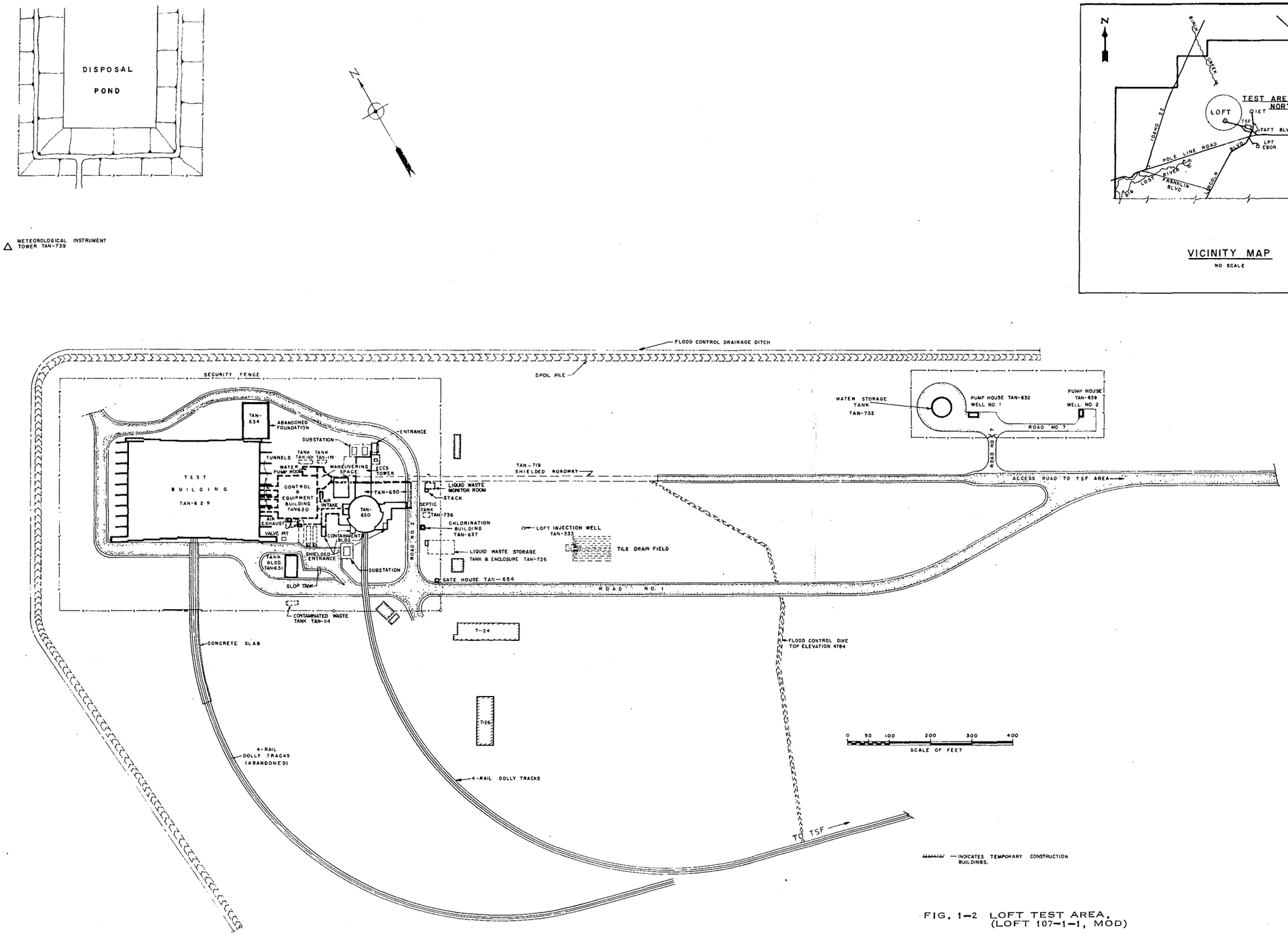


FIG. 1-2 LOFT TEST AREA. (LOFT 107-1-1, MOD)

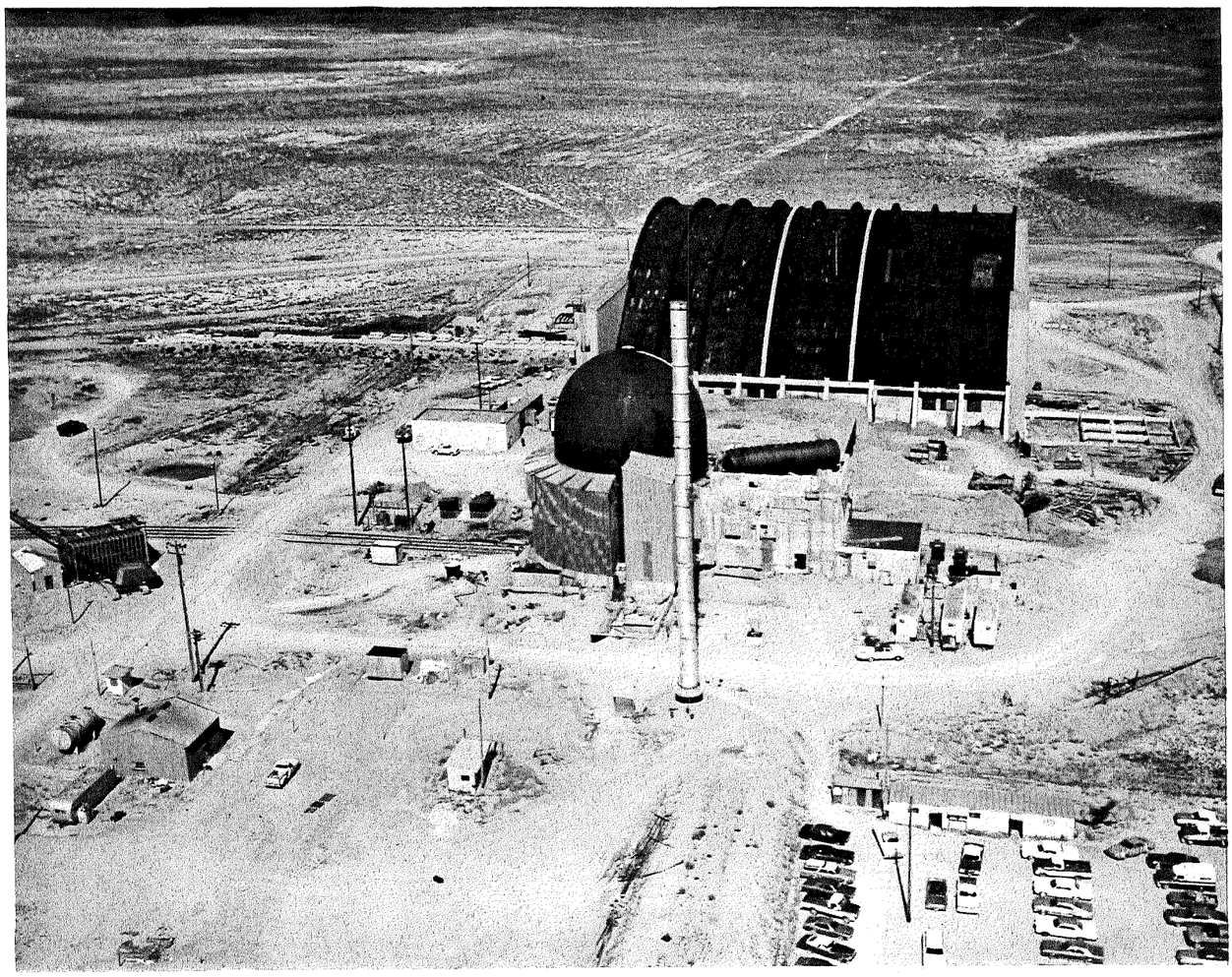

FIG. 1-3 AERIAL VIEW OF LOFT TEST AREA.
(73-1592)

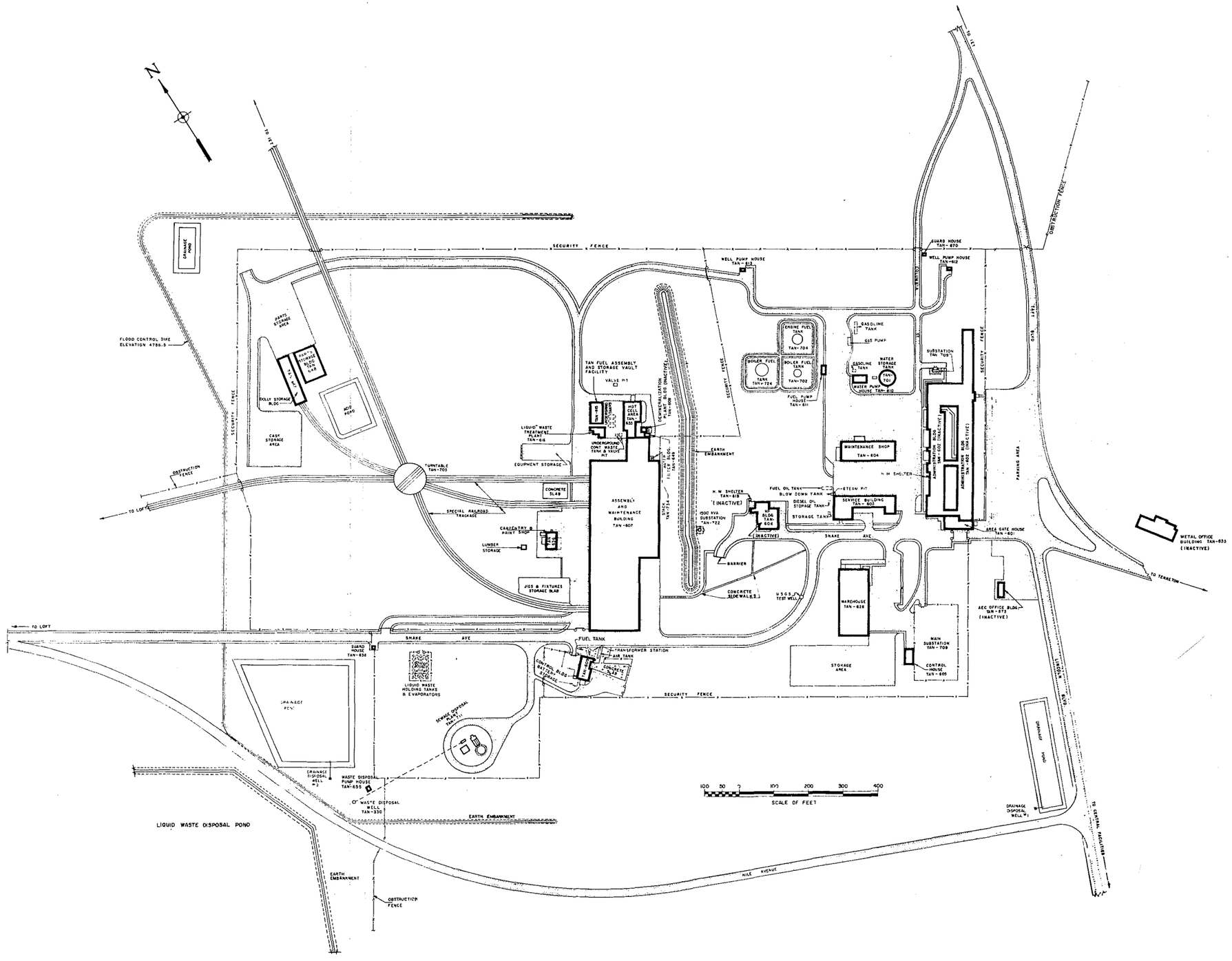


FIG. 1-4 LOFT ASSEMBLY AND HOT SHOP AREA. (TSF-2-111-1DO-3, MOD)

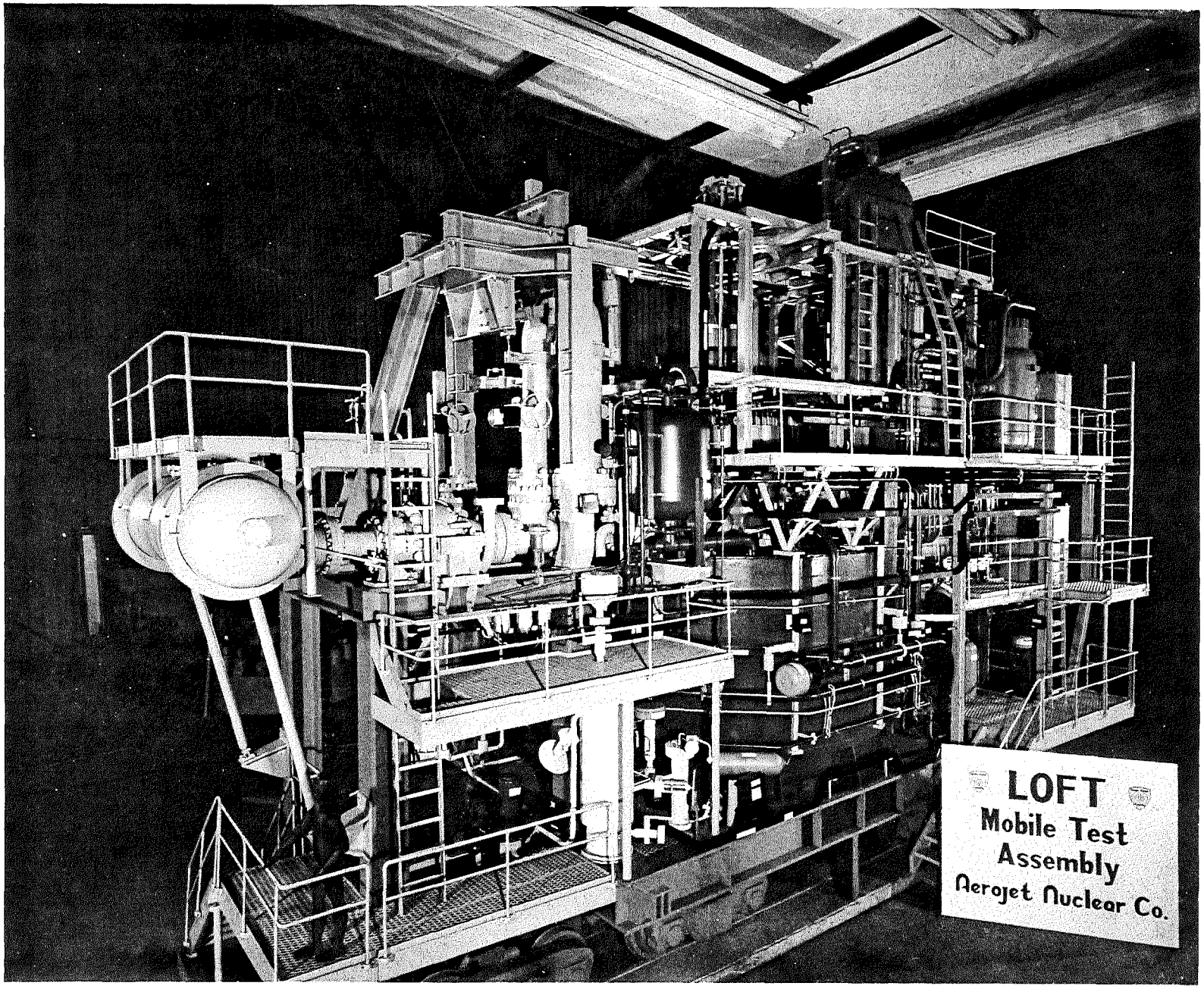


FIG. 1-5 LOFT MTA QUARTER-SCALE MODEL.
(73-872)

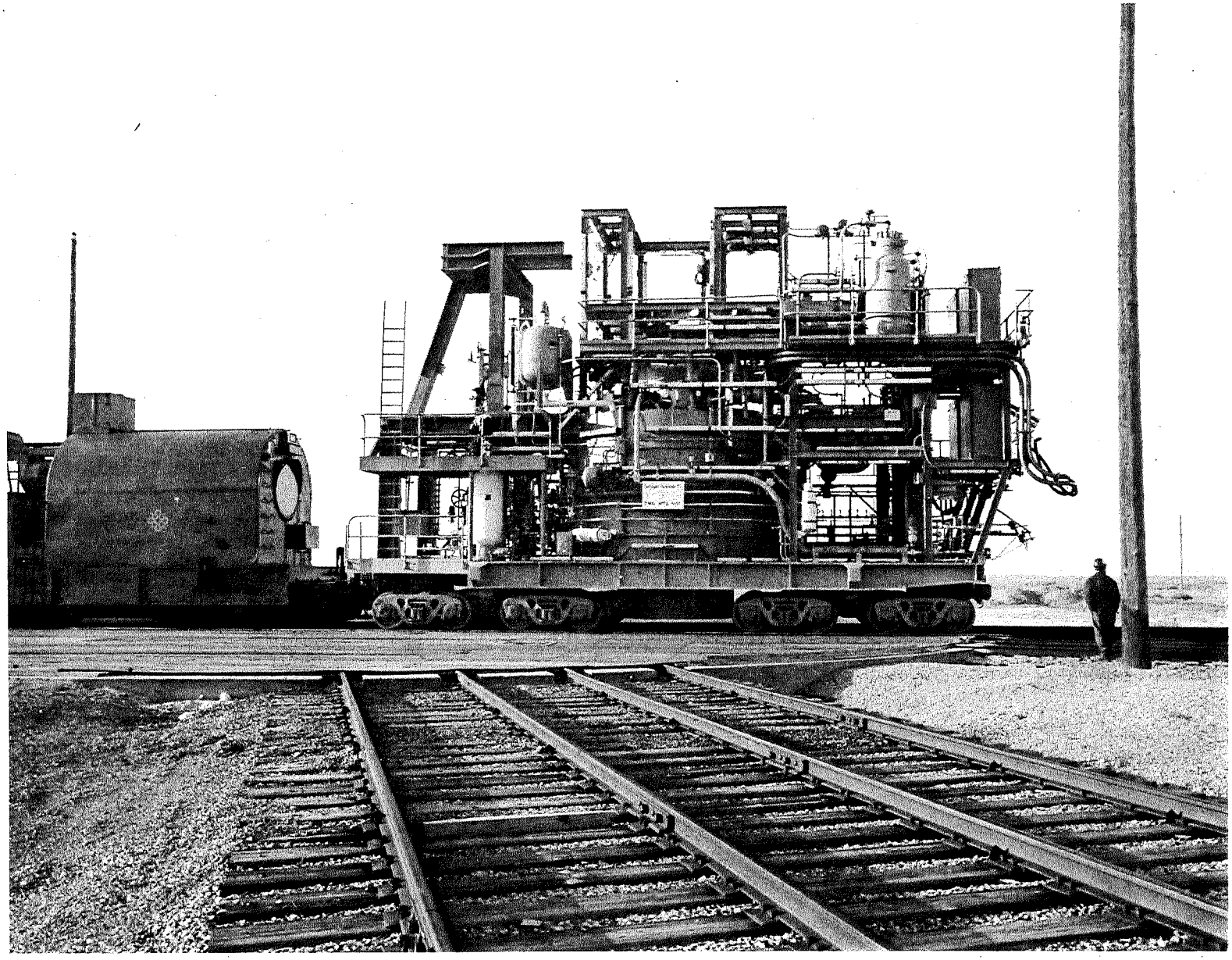

FIG. 1-6 MTA AND LOCOMOTIVE ON TURNTABLE.
(73-3741)

# LOFT INTEGRAL TEST FACILITY

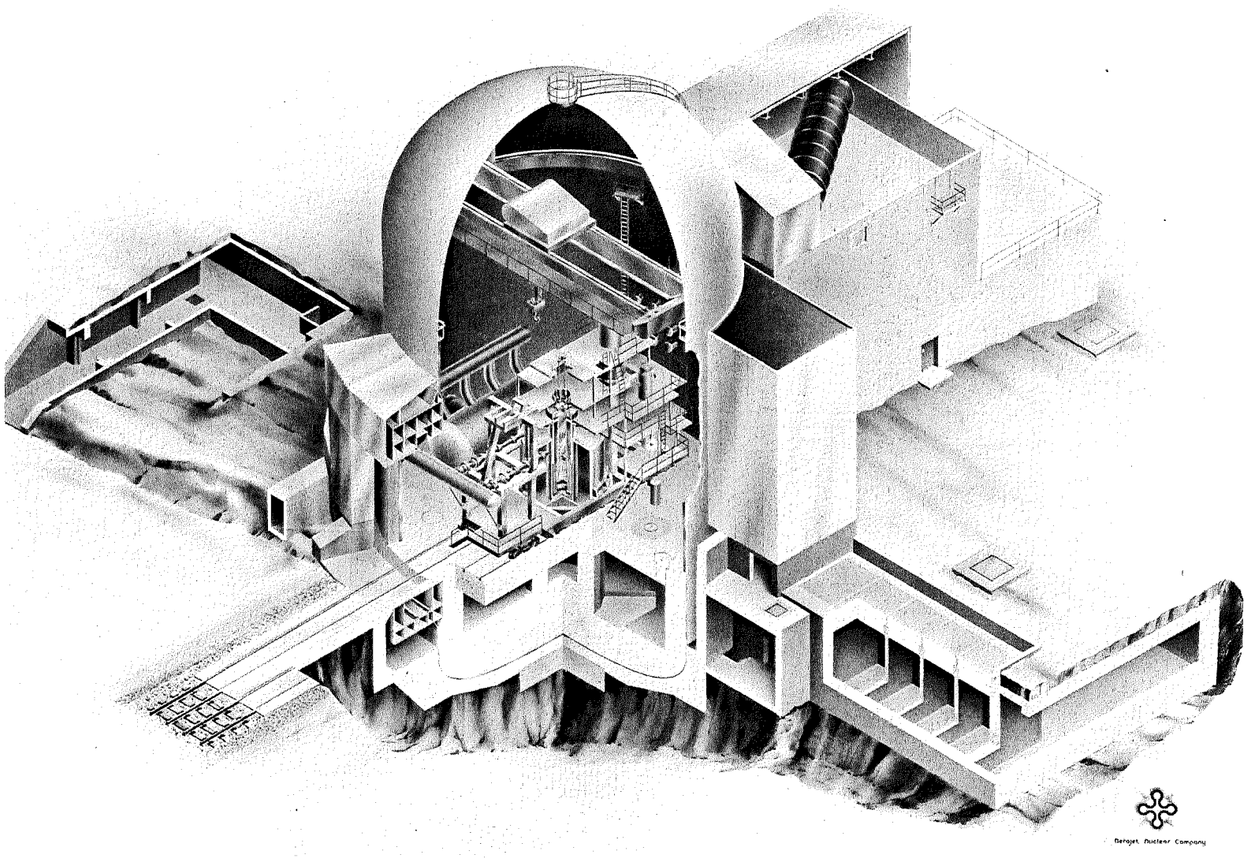


FIG. 1-7 ISOMETRIC DRAWING OF LOFT TEST FACILITY.
(73-2229)

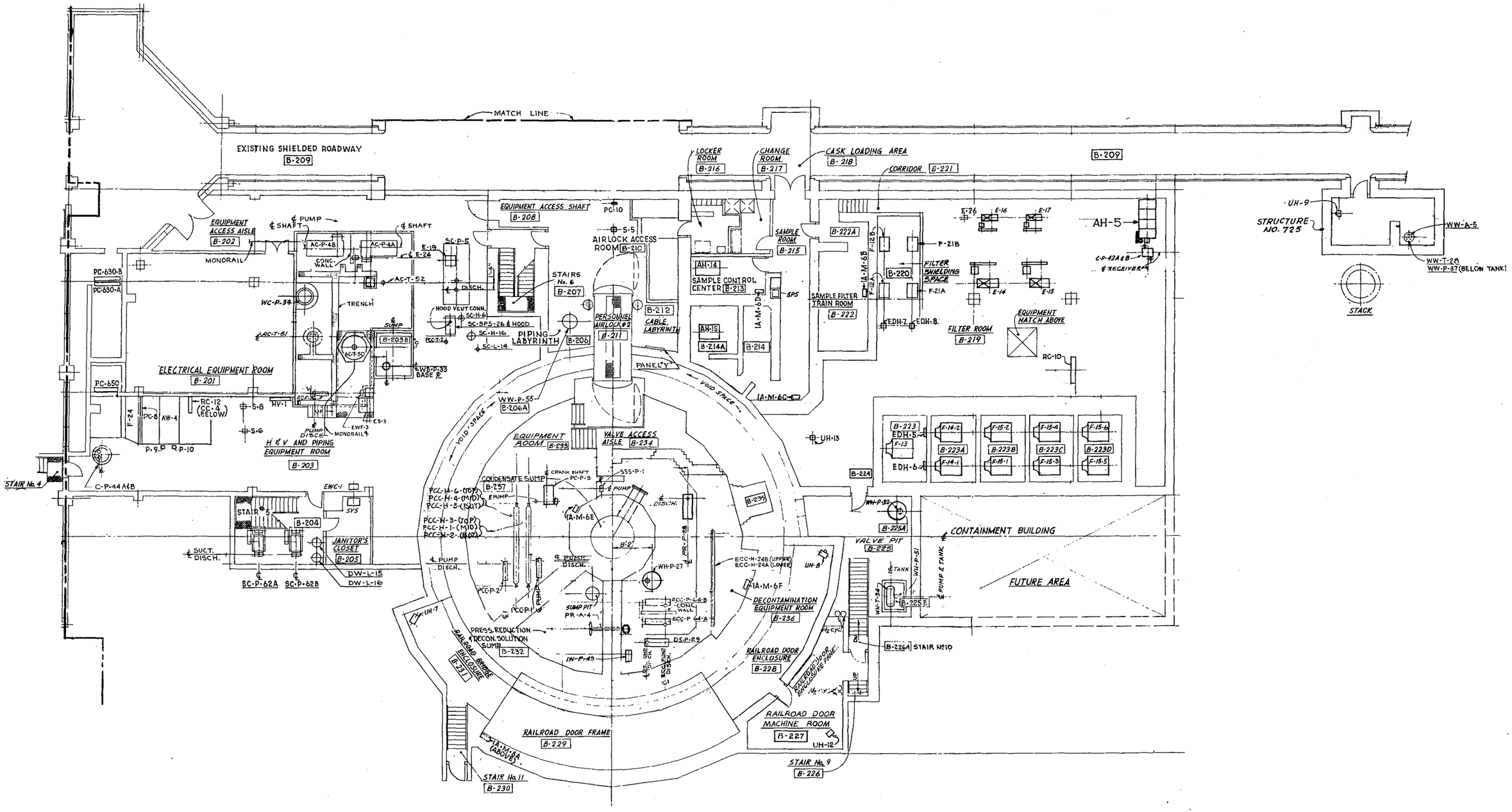


BASEMENT PLAN

FIG. 1-8 CONTAINMENT PLAN VIEW (BASEMENT ELEVATION). (650-P-14, R)

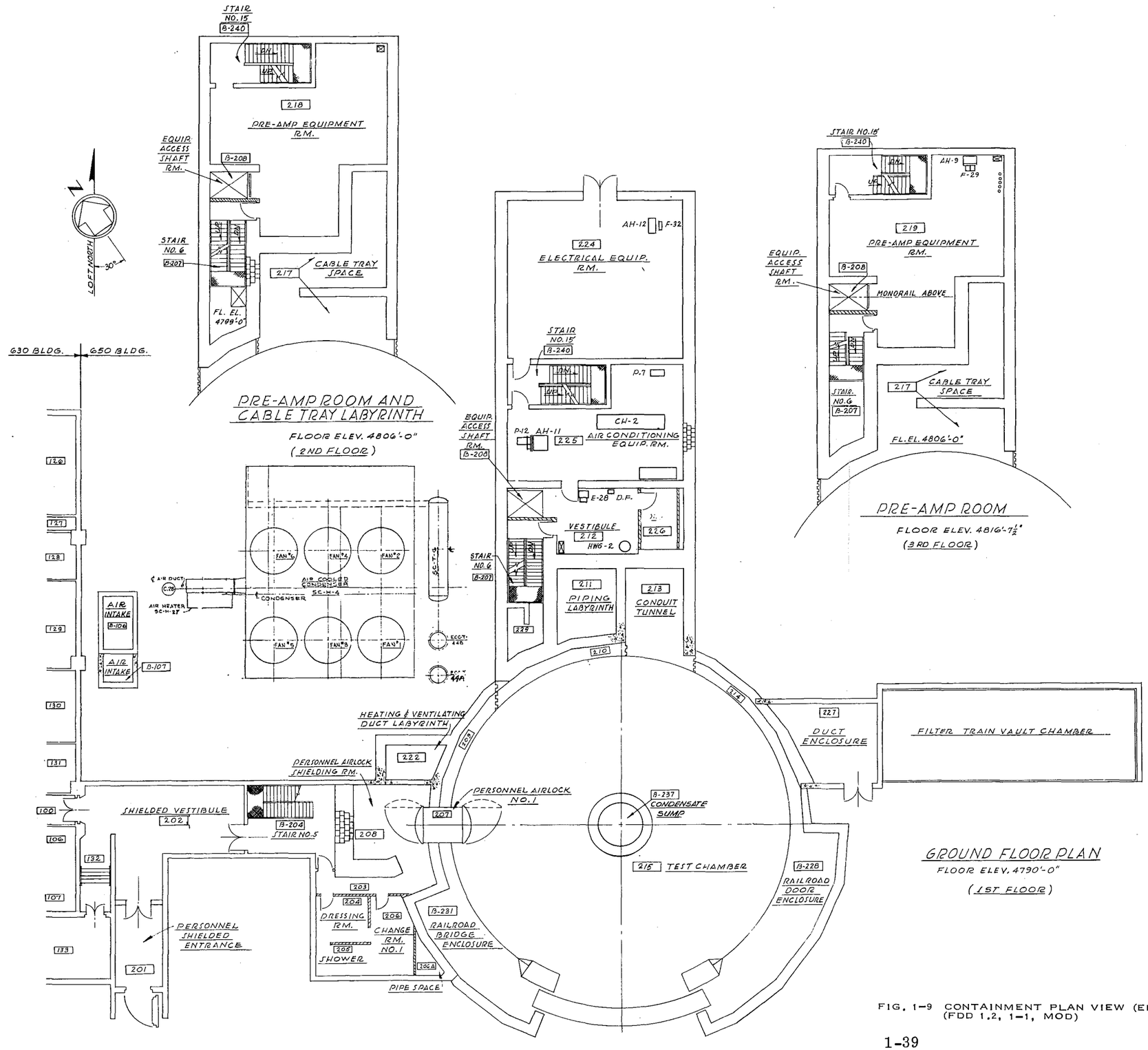


FIG. 1-9 CONTAINMENT PLAN VIEW (ELEV. 4790 FT)
(FDD 1.2, 1-1, MOD)

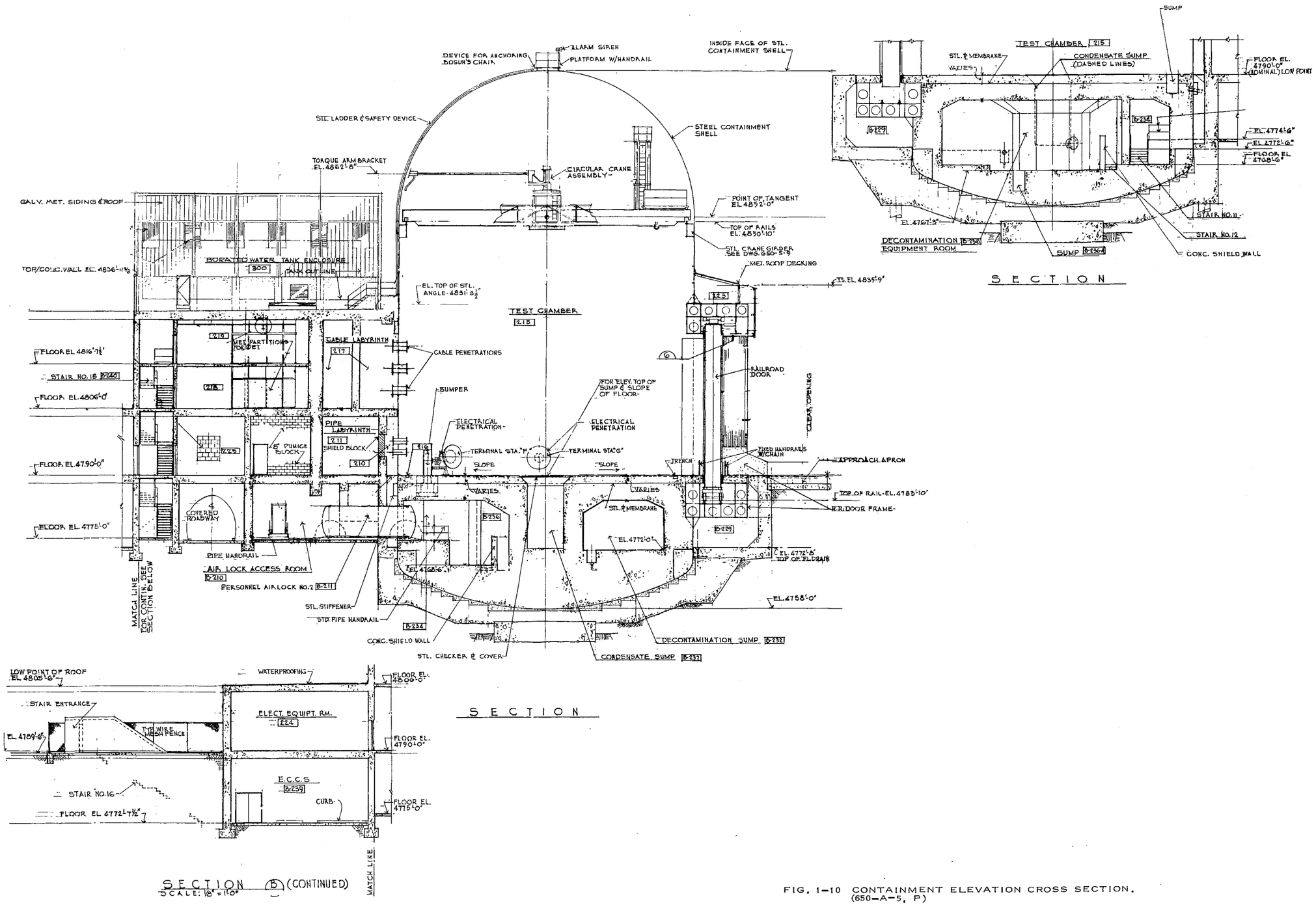


FIG. 1-10 CONTAINMENT ELEVATION CROSS SECTION. (650-A-5, P)

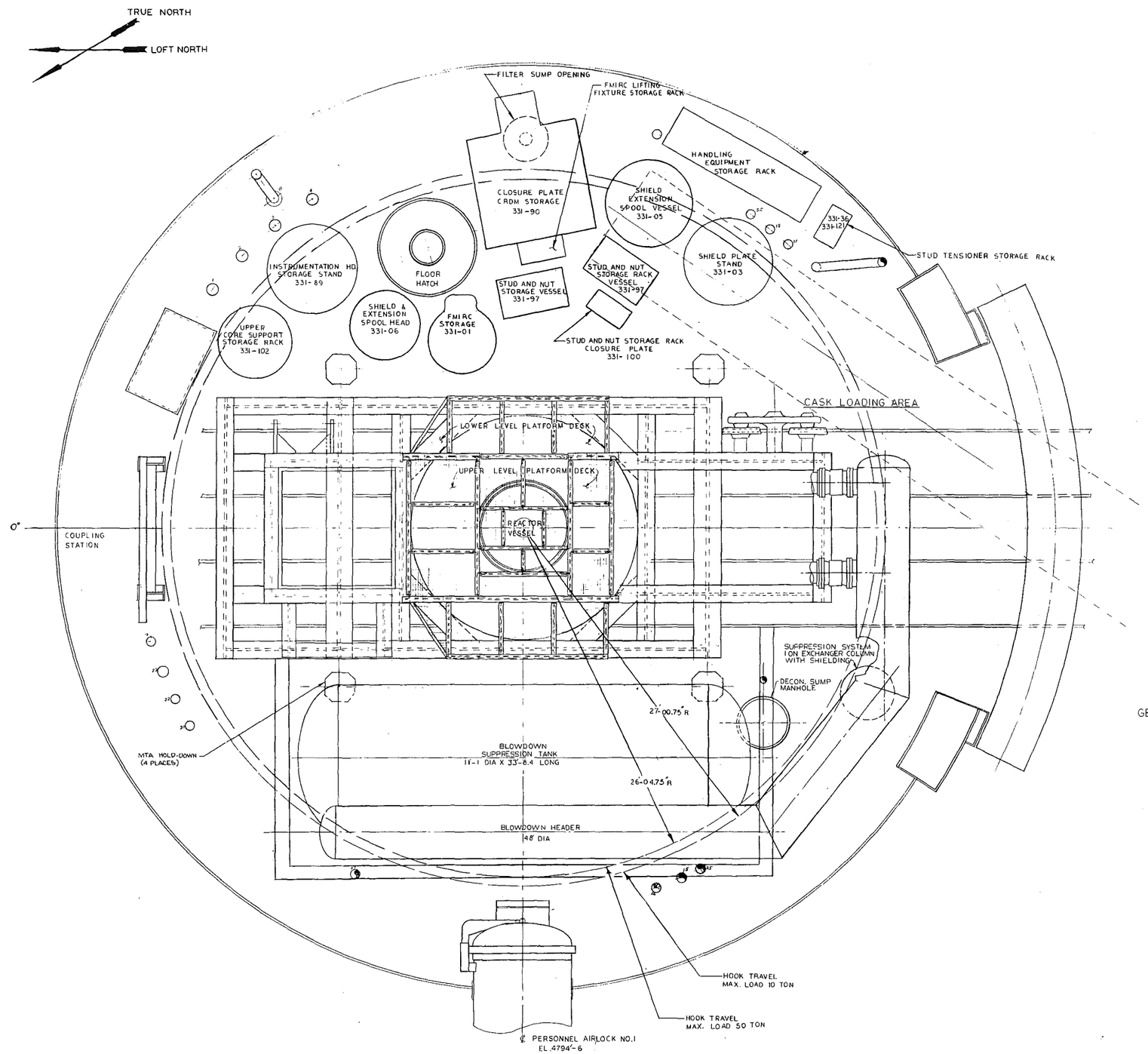


GENERAL NOTES:

1. FLOOR ELEVATION, 4790'-0 OUTER WALL
   4790'-3 FLOOR CENTER
2. INCORPORATE:
   PORTABLE CLEAN AREA 331-73
   ACCESS PLATFORM 331-38
   BOOM MONORAIL OR
   BRIDGE HOIST 331-115

FIG. 1-11 PLAN VIEW OF MTA IN CONTAINMENT VESSEL. (204177, NR)

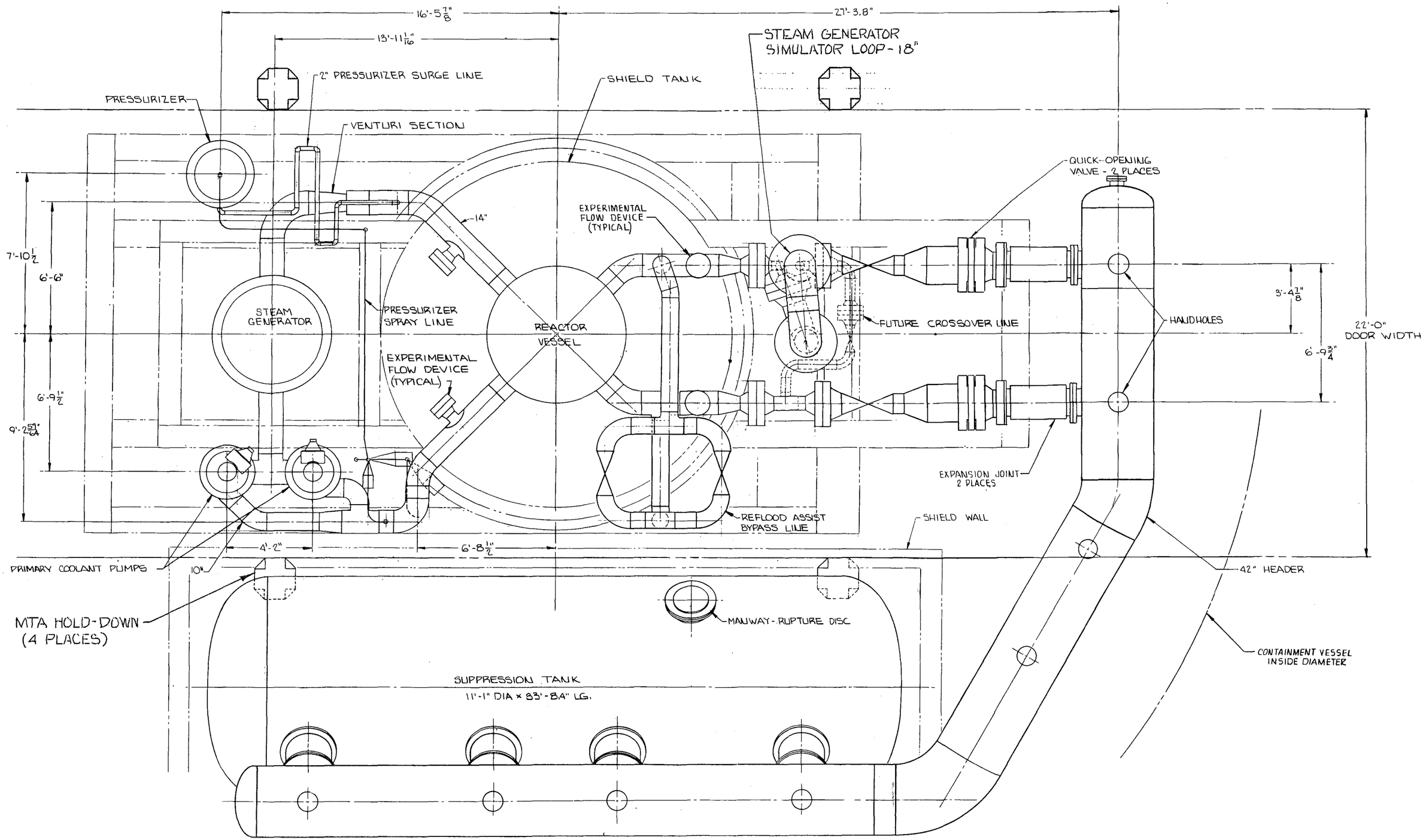


FIG. 1-12 PRIMARY COOLANT SYSTEM PLAN.
(204699, 1/2, NR)

## APPENDIX 1-A

## GENERAL DESIGN CRITERIA

The LOFT Integral Test System has been designed and constructed taking into consideration the general design criteria for nuclear powerplant construction permits as listed in Appendix A to 10 CFR Part 50 [1-A-1] referenced in paragraph 50.34 thereof[a]. In the discussion of each criterion, references are made to sections of the FSAR where description supporting or justifying the answer to each criterion is given.

### 1.A.1 Criterion 1 - Quality Standards and Records

#### 1.A.1.1 Requirements

"Structures, systems, and components important to safety shall be designed, fabricated, erected, and tested to quality standards commensurate with the importance of the safety functions to be performed. Where generally recognized codes and standards are used, they shall be identified and evaluated to determine their applicability, adequacy, and sufficiency and shall be supplemented or modified as necessary to assure a quality product in keeping with the required safety function. A quality assurance program shall be established and implemented in order to provide adequate assurance that these structures, systems, and components will satisfactorily perform their safety functions. Appropriate records of the design, fabrication, erection, and testing of structures, systems, and components important to safety shall be maintained by or under the control of the nuclear power unit licensee throughout the life of the unit."

#### 1.A.1.2 Discussion

##### 1.A.1.2.1 Essential Systems and Components

Certain systems, structures, and components were considered essential to accident prevention and to control accident consequences in the LOFT design

---

[a] As published in the Federal Register on July 7, 1972.

evaluations. These systems, structures, and components are as follows:

(1) Fuel assemblies
(2) Reactor vessel internals
(3) Primary coolant system (including portions of the blowdown system)
(4) Reactor instrumentation, controls, and protection systems
(5) ESFs
(6) Fuel handling system
(7) Containment vessel
(8) Electric power sources.

1.A.1.3 Codes and Standards

The following is a list of codes and standards used in the design and fabrication of the above-mentioned essential systems. The numbers correspond to the above-listed items.

(1) RDT E 13-15T, RDT E 6-9T, and Section III of the ASME Code (Section 4.2.4.2)
(2) RDT E 15-2T and Section III of the ASME Code (Section 4.2.4.1)
(3) Section III of the ASME Code (see Section 5.1.3 for complete listing)
(4) RDT C 16-1T (Section 9.2)
(5) RDT C 16-1T (see Section 7.2.2.5.7 for complete listing)
(6) RDT F 5-1T, IDO-12044, IDO-12028 (Section 11.9.2.3.1)
(7) Section III of the ASME Code (see Section 6.1.5 and Appendix 6-C for complete listing)
(8) RDT C 16-1T (Section 10.1).

1.A.1.4 Quality Assurance Program

The QA program is discussed in Section 16.0.

1.A.1.5 Test Inspection

Test and inspection procedures are discussed in applicable sections of the FSAR.

1.A.1.6 Records

The records associated with the design, fabrication, and testing of the systems and components of the LOFT facility are maintained in accordance with AEC Manual Appendix 0230, "Records Disposition" (handbook). Adequate protection of these records is maintained by storing a duplicated set of important LOFT documents in different locations.

By following the above record disposition procedures, the appropriate records will be maintained throughout the life of the facility.

## 1.A.2 Criterion 2 - Design Bases for Protection Against Natural Phenomena

### 1.A.2.1 Requirements

"Structures, systems, and components important to safety shall be designed to withstand the effects of natural phenomena such as earthquakes, tornadoes, hurricanes, floods, tsunami, and seiches without loss of capability to perform their safety functions. The design bases for these structures, systems, and components shall reflect: (1) appropriate consideration of the most severe of the natural phenomena that have been historically reported for the site and surrounding area, with sufficient margin for the limited accuracy, quantity, and period of time in which the historical data have been accumulated, (2) appropriate combinations of the effects of normal and accident conditions with the effects of the natural phenomena, and (3) the importance of the safety functions to be performed."

### 1.A.2.2 Discussion

#### 1.A.2.2.1 Essential Systems and Components

The integrity of systems, structures, and components essential to accident prevention and to mitigation of accident consequences has been included in the LOFT design evaluations. These systems, structures, and components are as follows:

(1) Fuel assemblies
(2) Reactor vessel internals
(3) Primary coolant system (including portions of the blowdown system)
(4) Reactor instrumentation, controls, and protection systems
(5) ESFs
(6) Fuel handling system
(7) Containment vessel
(8) Electric power sources.

1.A.2.2.2 Performance Standards

These essential systems and components have been designed to performance standards that enable the facility to withstand, without loss of the capability to protect the public, the additional forces that might be imposed by natural phenomena. The designs are based upon the most severe of the natural phenomena recorded for the vicinity of the LOFT site, with an appropriate margin to account for uncertainties in the historical data.

These natural phenomena, together with FSAR references, are as follows:

| | | |
|---|---|---|
| (1) | Earthquake | FSAR 3.6, 4.2.4.1, 5.1.2, 6.1.3, 7.2.2.5, and 9.2 |
| (2) | Tornado | FSAR 3.7 |
| (3) | Groundwater and flood | FSAR 3.4 |
| (4) | Wind | FSAR 6.1.3 |
| (5) | Snow and ice | FSAR 6.1.3 |
| (6) | Other local LOFT site effects | No others considered |

1.A.3 Criterion 3 - Fire Protection

1.A.3.1 Requirements

"Structures, systems, and components important to safety shall

be designed and located to minimize, consistent with other safety requirements, the probability and effect of fires and explosions. Noncombustible and heat-resistant materials shall be used wherever practical throughout the unit, particularly in locations such as the containment and control room. Fire detection and fighting systems of appropriate capacity and capability shall be provided and designed to minimize the adverse effects of fires on structures, systems, and components important to safety. Fire fighting systems shall be designed to assure that their rupture or inadvertent operation does not significantly impair the safety capability of these structures, systems, and components."

1.A.3.2 Discussion

The LOFT facility is designed to minimize the probability of fire and explosion. Noncombustibles and fire-resistant materials will be used whenever practical throughout the facility.

The control room has been constructed and furnished with noncombustible equipment. The control room is protected by a preaction water sprinkler system (see Section 11.10.3.3).

Electrical distribution equipment has been physically located to reduce vulnerability of vital circuits to physical damage as a result of accidents. Locations to achieve this result are described in Section 10.2.3.

Fire protection and alarm systems are designed to provide the necessary protective features or signals in facility areas where fire hazards may exist. See Section 11.10.3 for detailed description of fire hazards and associated protection features.

Automatic fire detection equipment is installed in the area housing the vital power supply equipment (see Section 11.10.3). Drains are provided in areas housing safety equipment to remove the water used during firefighting or accidental rupture of the firefighting system.

## 1.A.4 Criterion 4 - Environmental and Missile Design Bases

### 1.A.4.1 Requirements

"Structures, systems, and components important to safety shall be designed to accommodate the effects of and to be compatible with the environmental conditions associated with normal operation, maintenance, testing, and postulated accidents, including loss-of-coolant accidents. These structures, systems, and components shall be appropriately protected against dynamic effects, including the effects of missiles, pipe whipping, and discharging fluids, that may result from equipment failures and from events and conditions outside the nuclear power unit."

### 1.A.4.2 Discussion

#### 1.A.4.2.1 Environmental

All of the systems and components in the containment vessel which are important to safety are designed to operate under environmental conditions as severe as would exist during a LOCA as well as during normal and testing operation. The containment vessel and its associated penetration seals are also designed to withstand the environmental conditions associated with a LOCA; e.g., temperature, pressure radiation levels, etc. (see Section 6.1.3).

#### 1.A.4.2.2 Dynamic Effects

For most of their routing, the emergency injection lines are outside the containment vessel and hence protected from missiles originating within the containment vessel. Shielding of the injection lines located outside the containment vessel is not necessary as there are no credible sources of missiles in that area. Emergency injection lines enter the containment vessel at the MTA coupling station. Judicious routing of the emergency injection lines on board the MTA take full advantage of structural components that

could provide missile shielding. Emergency injection lines are separated to prevent the possibility of a single failure's resulting in total loss of ECC capabilities (see Section 7.2.4.3).

Double isolation valves or other means of providing a double barrier to fission product leakage from the containment vessel are utilized in the containment isolation system (CIS) to provide protection against dynamic effects or missiles resulting from plant equipment failures (see Section 6.2).

A special structure over the top of the control rod drive mechanisms (CRDMs) eliminates the potential that a rod drive might become a missile capable of penetrating the containment vessel. (See Section 4.2.4.5.3.)

### 1.A.5 Criterion 5 - Sharing of Structures, Systems, and Components

#### 1.A.5.1 Requirements

"Structures, systems, and components important to safety shall not be shared among nuclear power units unless it can be shown that such sharing will not significantly impair their ability to perform their safety functions, including, in the event of an accident in one unit, an orderly shutdown and cooldown of the remaining units."

#### 1.A.5.2 Discussion

This criterion is not applicable since LOFT is a single-unit facility.

### 1.A.6 Criterion 10 - Reactor Design

#### 1.A.6.1 Requirements

"The reactor core and associated coolant, control, and protection systems shall be designed with appropriate margin to assure that specified acceptable fuel design limits are not

exceeded during any condition of normal operation, including the effects of anticipated operational occurrences."

1.A.6.2 Discussion

The fuel damage limits are:

(1) For overheating, the onset of the transition from nucleate to film boiling at any location of a fuel pin. [This event is called the "departure from nucleate boiling" (DNB) or the "critical heat flux" (CHF).]

(2) For overstressing, the introduction of 1% plastic strain at any fuel pin location.

Fuel pin cladding integrity is ensured under all normal and abnormal operational modes by avoiding clad overheating and overstressing. The fuel pin design features the following:

(1) Free-standing cladding to maintain fuel-pellet-to-cladding dimensional relationships.

(2) A fuel-pellet-to-cladding gap that accommodates anticipated fuel pellet swelling from temperature and irradiation.

(3) A void-to-fuel-volume ratio that prevents the internal fuel pin pressure from exceeding the coolant pressure (hot conditions) for the design lifetime of the fuel pin. The reactor is designed to accommodate, without fuel damage, expected transients from steady state operation, including the transients given in the criterion, by maintaining steady state operating conditions that provide sufficient margins from the fuel damage limits.

The steady state reactor operating condition limits are established by reactor plant transient analysis. The transient analysis assumes that:

(1) At transient initiation the plant is at an overpower condition determined by (a) the estimated error of the reactor power determination by calorimetric techniques, (b) the upper limit of the allowable operating band, and (c) possible

deviations between the measured and actual reactor power (instrument error)

(2) At transient initiation the coolant temperature is at upper limit and pressure is at the lower limit of the allowable operating band

(3) At transient initiation the coolant flow is based on the as-built dimensions and distribution within the fuel assemblies is as predicted based on flow information from the maldistribution flow tests

(4) The fuel pin geometry and spacing are as predicted based on conditions resulting from a statistical evaluation of the tolerance buildup during the manufacturing of the actual fuel rod assemblies.

The reactor PPS shuts down the reactor (terminates criticality) if operating conditions exceed those required to maintain the fuel damage limit margin. The final setpoints for reactor PPS action are determined by the above-mentioned transient analysis (see Section 9.1.1.3.3).

After criticality is terminated, two sources of heat remain in the fuel, viz, (a) the delayed neutron and fission product decay of the fuel and (b) the stored thermal energy of the fuel. The reactor system has several design features for removal of this heat from the fuel pins if pump power is lost. The primary coolant pump with the flywheel generator is designed to have a high moment of inertia to maintain flow to the core, after power to the pump is lost, until adequate core cooling can be maintained by natural coolant circulation with decay heat removal to the secondary system.

The experimental utilization of LOFT for multiple blowdowns requires that the core be subjected to transients not normally experienced by LPWRs. This criterion is not considered applicable to the reactor core during LOCEs.

## 1.A.7 Criterion 11 - Reactor Inherent Protection

### 1.A.7.1 Requirements

"The reactor core and associated coolant systems shall be designed so that in the power operating range the net effect of the prompt inherent feedback characteristics tends to compensate for a rapid increase in reactivity."

### 1.A.7.2 Discussion

The temperature coefficient which is composed of the moderator temperature coefficient and the fuel Doppler coefficient are both negative and have values of approximately $-3.2 \times 10^{-4}$ $\Delta\rho/°F$ and $-1.00 \times 10^{-5}$ $\Delta\rho/°F$, respectively, at beginning of life (BOL) in the power operating range (see Section 4.2.2.1.4).

## 1.A.8. Criterion 12 - Suppression of Reactor Power Oscillations

### 1.A.8.1 Requirements

"The reactor core and associated coolant, control, and protection systems shall be designed to assure that power oscillations which can result in conditions exceeding specified acceptable fuel design limits are not possible or can be reliably and readily detected and suppressed."

### 1.A.8.2 Discussion

The core design for LOFT is inherently stable by a conservative margin against space-time power oscillations. The core, together with the primary and secondary heat removal systems and controls, is designed to be stable against total core power oscillations. This has been confirmed by dynamic analysis using the LOFT hybrid plant simulation (see Section 9.1.4).

## 1.A.9 Criterion 13 - Instrumentation and Control

### 1.A.9.1 Requirements

"Instrumentation shall be provided to monitor variables and systems over their anticipated ranges for normal operation,

for anticipated operational occurrences, and for accident conditions as appropriate to assure adequate safety, including those variables and systems that can affect the fission process, the integrity of the reactor core, the reactor coolant pressure boundary, and the containment and its associated systems. Appropriate controls shall be provided to maintain these variables and systems within prescribed operating ranges."

1.A.9.2 Discussion

The plant is equipped with a control room which contains the controls and instrumentation necessary for operation of the plant under all normal conditions. In addition to the instruments and controls necessary for control under normal conditions, PPS provide control under abnormal conditions (see Section 9.2).

Instrumentation and controls essential to avoid undue risk to the health and safety of the public are provided to monitor and maintain neutron flux, primary coolant pressure, flow rate, temperature, and control rod positions within prescribed operating ranges (see Section 9.1 and 9.2).

Reactivity control is achieved by movable control rods and by chemical neutron absorber (in the form of boric acid), dissolved in the primary coolant. The position of each control rod will be displayed in the control room. Changes in the reactivity status due to soluble boron may be indicated by changes in the position of the control rods. Actual boron concentration in the primary coolant is determined periodically using the sampling system and is reported to the reactor operator. (See Sections 9.1.2 and 9.1.4.)

Other I&C systems are provided to monitor and maintain, within prescribed operating ranges, the temperatures, pressure, flow, and levels in the steam systems and auxiliary systems (see Section 9.1.5).

## 1.A.10 Criterion 14 - Reactor Coolant Pressure Boundary

### 1.A.10.1 Requirements

"The reactor coolant pressure boundary shall be designed, fabricated, erected, and tested so as to have an extremely low probability of abnormal leakage, of rapidly propagating failure, and of gross rupture."

### 1.A.10.2 Discussion

The LOFT primary coolant pressure boundary was designed and constructed to meet this criterion as evidenced by the following:

(1) Material selection, design, fabrication, inspections, and testing were in accordance with Section III of the ASME Code[1-A-2].

(2) Service life of the reactor vessel and other coolant boundary materials was chosen to retain metallurgical stability of the material, to account for cyclic effects of mechanical shock and vibratory loadings, and to give due consideration to radiation effects and the amount of increase in the nil-ductility transition temperature (NDTT) as a result of neutron irradiation.

(3) Double-seal and bleed arrangements were incorporated on the primary coolant pressure boundary main closures (see Section 5.2.4.1).

(4) Reactor vessel, steam generator, and pressurizer nozzles incorporated Inconel safe ends for field welding of piping.

(5) The primary coolant system is designed for routine visual and volumetric examination of closure bolt assemblies, nozzles, welds, and other critical areas and to meet the inspectability requirements of Section XI of the ASME Code[1-A-2].

In addition, leakage is monitored to prevent the possibility of operating the reactor with abnormal leakage. Instrumentation is provided to measure fluid volume changes (pressurizer

and addition and control system batch tank) and radioactivity levels in the containment vessel. An increase in net makeup to the combined primary coolant system and connected addition and control system indicates leakage (see Section 11.2.2).

### 1.A.11 Criterion 15 - Reactor Coolant System Design

#### 1.A.11.1 Requirements

"The reactor coolant system and associated auxiliary, control, and protection systems shall be designed with sufficient margin to assure that the design conditions of the reactor coolant pressure boundary are not exceeded during any condition of normal operation, including anticipated operational occurrences."

#### 1.A.11.2 Discussion

The LOFT primary coolant pressure boundary was designed to meet this criterion. Primary coolant pressure boundary components were analyzed in accordance with Section III of the ASME Code. The analysis included consideration of normal, upset, emergency, and faulted conditions (see Table 5-III). An overpressure protection report was prepared to demonstrate sufficiency of the safety valve design (see Section 5.2.4.1.4). The analysis of transients presented in Section 15.2 also shows that design parameters are not exceeded for upset and emergency conditions, even with very conservative assumptions of operability of the PPS.

### 1.A.12 Criterion 16 - Containment Design

#### 1.A.12.1 Requirements

"Reactor containment and associated systems shall be provided to establish an essentially leaktight barrier against the uncontrolled release of radioactivity to the environment and to assure that the containment design conditions important to safety are not exceeded for as long as postulated accident conditions require."

1.A.12.2 Discussion

The containment structure and the associated sealing systems are designed to maintain their structural integrity and leak-tight barrier with a design internal pressure of 36 psig and environmental conditions resulting from a containment blowdown (see Section 6.1.3). The postulated accident conditions described in Section 15.3.6.4.3 result in peak transient pressures of about 25% of the design operating conditions. The leak rate of the containment and associated sealing systems will be verified by acceptance tests to be less than 75% of the maximum allowable (0.2 wt% per day at 36 psig). The containment leak rate will be verified to be within the design limits on a periodic basis in accordance with the test program specified in Appendix 6-D.

The associated released radiation exposures with this leak rate and the postulated accident conditions have been calculated in Section 15.3.6.6 and the exposures for a maximum hypothetical accident (MHA) in Section 15.4. The radiological consequences associated with either of these accidents are much less than the guidelines established in 10 CFR Part 100.

1.A.13 Criterion 17 - Electrical Power Systems

1.A.13.1 Requirements

"An onsite electrical power system and an offsite electrical power system shall be provided to permit functioning of structures, systems, and components important to safety. The safety function for each system (assuming the other system is not functioning) shall be to provide sufficient capacity and capability to assure that (1) specified acceptable fuel design limits and design conditions of the reactor coolant pressure boundary are not exceeded as a result of anticipated operational occurrences and (2) the core is cooled and containment integrity and other vital functions are maintained in the event of postulated accidents.

"The onsite electrical power supplies, including the batteries, and the onsite electrical distribution system, shall have sufficient independence, redundancy, and testability to perform their safety functions assuming a single failure.

"Electric power from the transmission network to the onsite electric distribution system shall be supplied by two physically independent circuits (not necessarily on separate rights of way) designed and located so as to minimize to the extent practical the likelihood of their simultaneous failure under operating and postulated accident and environmental conditions. A switchyard common to both circuits is acceptable. Each of these circuits shall be designed to be available in sufficient time following a loss of all onsite alternating current power supplies and the other offsite electrical power circuit, to assure that specified acceptable fuel design limits and design conditions of the reactor coolant pressure boundary are not exceeded. One of these circuits shall be designed to be available within a few seconds following a loss-of-coolant accident to assure that core cooling, containment integrity, and other vital safety functions are maintained.

"Provisions shall be included to minimize the probability of losing electric power from any of the remaining supplies as a result of, or coincident with, the loss of power generated by the nuclear power unit, the loss of power from the transmission network, or the loss of power from the onsite electric power supplies."

1.A.13.2 Discussion

The LOFT electrical power distribution system, described in Section 10.0, complies with the requirements of Criterion 17 in all respects with one exception, viz, electrical power from the nearest utility company switchyard is supplied by a single transmission line link to the NRTS dual-line transmission system, a distance of 1/4 mile.

Two physically independent 13.8-kV distribution circuits from the TAN substation to the LOFT substations are simultaneously energized and equipped with independent protection from faults. Hence, power is maintained on either line in event of a fault and outage on the other.

In the event of loss of all offsite power to LOFT, sufficient power for operation of the following loads will be available from either of the dual battery-MG set systems; or in the event of extended commercial power outages, one of the emergency diesel generators will be started to conserve vital battery set power (see Section 10.2.3).

Redundant battery-MG set power is provided for the following loads:

(1) The protection system loads include (a) ECC, (b) containment isolation, and (c) reactor shutdown

(2) Nuclear and process instrumentation used in startup and operation of the reactor

(3) The essential operating loads include:

- (a) Primary coolant pump cooling
- (b) Health physics instrumentation
- (c) Emergency lighting
- (d) Communications and alarm systems
- (e) Warning and evacuation
- (f) Demineralized water
- (g) Domestic water pump CW-P-22
- (h) Diesel fuel oil pumps
- (i) Charging pumps (ECCS)
- (j) Low-pressure injection system (LPIS) pumps
- (k) Plant protection circuits
- (l) Auxiliary feedwater and secondary coolant makeup
- (m) Fire protection water pump
- (n) Process system and valve control
- (o) Stack monitor gas sample pumps.

## 1.A.14 Criterion 18 - Inspection and Testing of Electric Power Systems

### 1.A.14.1 Requirements

"Electric power systems important to safety shall be designed to permit appropriate periodic inspection and testing of important areas and features, such as wiring insulation, connections, and switchboards, to assess the continuity of the systems and the condition of their components. The systems shall be designed with a capability to test periodically (1) the operability and functional performance of the components of the systems, such as onsite power sources, relays, switches, and buses, and (2) the operability of the systems as a whole and, under conditions as close to design as practical, the full operation sequence that brings the systems into operation, including operation of applicable portions of the protection system, and the transfer of power among the nuclear power unit, the offsite power system, and the onsite power system."

### 1.A.14.2 Discussion

The entire electrical power system is designed to permit periodic inspection and testing of (a) all major components such as transformers, switchgear, diesel generators, batteries, MG sets, and motor control centers (MCCs), and (b) all minor components such as protective relays, control switches, circuit breakers, meters, and wiring. Functional testing of diesel generators, batteries and MG sets, and their controls will be performed on a scheduled basis. Additional discussion of this subject is presented in Section 10.4.

## 1.A.15 Criterion 19 - Control Room

### 1.A.15.1 Requirements

"A control room shall be provided from which actions can be taken to operate the nuclear power unit safely under normal conditions and to maintain it in a safe condition under accident

conditions, including loss-of-coolant accidents. Adequate radiation protection shall be provided to permit access and occupancy of the control room under accident conditions without personnel receiving radiation exposures in excess of 5 rem whole body, or its equivalent to any part of the body, for the duration of the accident.

"Equipment at appropriate locations outside the control room shall be provided (1) with a design capability for prompt hot shutdown of the reactor, including necessary instrumentation and controls to maintain the unit in a safe condition during hot shutdown, and (2) with a potential capability for subsequent cold shutdown of the reactor through the use of suitable procedures."

1.A.15.2 Discussion

The reactor is controlled from a panel located in the main control room, which is designed to permit continuous occupancy following an MHA and during all LOCEs (see Section 13.2.4 and 9.1.1.1).

Controls and instrumentation required to monitor and operate the reactor and electric-power-generating equipment under normal operating conditions are located within the control room. This includes indication of power level; process variables such as temperatures, pressure, and flows; valve positions; and control rod positions.

ESFs are controlled and monitored from the control room. The status of all dynamic equipment (pumps, valves, etc.), as well as pertinent pressure, temperatures, and flows, are displayed. The radiation monitoring system has provision for alarms and for display of instrumentation readouts in the control room.

The controls and instrumentation in the control room are designed to permit shutting down the reactor under accident conditions, removing decay heat, and maintaining the reactor in a safe condition (see Section 9.1.1).

The control room walls and roof are designed to provide adequate protection against direct radiation to control room personnel at all times. Control room personnel would not receive a whole body dose in excess of 0.25 mR/hr from all sources of direct radiation after 100 sec following a LOCA or any LOCE.

The control room ventilation system has radioactivity monitors on the air intakes connected to alarms in the control room to minimize ingress of airborne contaminants escaping from the reactor containment. The details of the control room ventilation system and its operation following an accident are described in Section 11.7.2.1.

The control room is constructed and furnished with non-flammable equipment. Sufficient fire extinguishers will be supplied, and combustible materials (such as records) will be kept to a minimum.

Provision is made outside the control room to shut down the reactor and maintain it in a safe condition after shutdown if access to the control room is lost or if the room must be evacuated in the unlikely event of a fire or other causes (see Section 9.1.1.1).

## 1.A.16 Criterion 20 - Protection System Functions

### 1.A.16.1 Requirements

"The protection system shall be designed (1) to initiate automatically the operation of appropriate systems including the reactivity control systems, to assure that specified acceptable fuel design limits are not exceeded as a result of anticipated operational occurrences and (2) to sense accident conditions and to initiate the operation of systems and components important to safety."

### 1.A.16.2 Discussion

The PPS sense all key plant parameters and provide reactor shutdown, ECC, and containment isolation as required in the

event of an abnormal operating condition or plant fault. Analyses of all abnormal operating conditions of plant faults have been performed to demonstrate that the PPS meet all criteria for reactor PPS set forth in RDT Standard C 16-1T (see FSAR Sections 15.2, 15.3, and 9.2).

### 1.A.17 Criterion 21 - Protection System Reliability and Testability

#### 1.A.17.1 Requirements

"The protection system shall be designed for high functional reliability and inservice testability commensurate with the safety functions to be performed. Redundancy and independence designed into the protection system shall be sufficient to assure that (1) no single failure results in loss of the protection function and (2) removal from service of any component or channel does not result in loss of the required minimum redundancy unless the acceptable reliability of operation of the protection system can be otherwise demonstrated. The protection system shall be designed to permit periodic testing of its functioning when the reactor is in operation, including a capability to test channels independently to determine failures and losses of redundancy that may have occurred."

#### 1.A.17.2 Discussion

The PPS design meets the criterion by specific location, ample design capacity, component redundancy, and inservice testing. The following design criteria have been applied to the design of the instrumentation:

(1) No single component failure shall prevent the PPS from fulfilling their protective function when action is required.

(2) No single component failure shall initiate unnecessary PPS action, provided implementation does not conflict with the criterion above.

Manual testing facilities are built into the PPS to provide for (a) preoperational testing to give assurance that the

PPS can fulfill their required functions and (b) on-line testing to assure operability and to demonstrate reliability.

The PPS are designed in accordance with RDT Standard C 16-1T (see Section 9.2).

### 1.A.18 Criterion 22 - Protection System Independence

#### 1.A.18.1 Requirements

"The protection system shall be designed to assure that the effects of natural phenomena, and of normal operating, maintenance, testing, and postulated accident conditions on redundant channels do not result in loss of the protection function, or shall be demonstrated to be acceptable on some other defined basis. Design techniques, such as functional diversity or diversity in component design and principles of operation, shall be used to the extent practical to prevent loss of the protection function."

#### 1.A.18.2 Discussion

Coincidence circuits are provided for the PPS to ensure that all criteria specified in RDT Standard C 16-1T are met. All protection system functions are implemented by redundant sensors, instrument strings, logic, and actuation devices that combine to form the protection system. Redundant protection channels and their associated elements are electrically independent and packaged to provide physical separation. The reactor protection system initiates a trip of the channel involved when modules, equipment, or subassemblies are removed (see Section 9.2).

Physical separation between PPS channels, as well as from other equipment, is used to assure system independence.

A review of the independence criteria for the electrical system indicates that only one fuel tank is in the design of the diesel generator system which supplies backup power for the vital power system in the event of an extended commercial power outage. The normal source of power for the

vital power system is the redundant battery banks as described in Section 10.0. To provide assurance that this below-grade fuel supply tank will perform its function when required, periodic inspections of the tank bottom will be made to determine the buildup of crud on the tank bottom. In the event a significant buildup occurs which could hamper the operation of either of the fuel supply lines, the tank bottom will be cleaned.

In addition to the tank inspections, a maximum inventory of 25,000 gal of fuel must be available in the tank prior to critical operation as is required in the LOFT Technical Specifications. This will ensure that sufficient fuel for either generator is on hand to exceed the minimum operating time for the backup supply source. In the highly unlikely event that the tank develops a leak, fuel can be supplied to either of the diesel generator day tanks from a portable fuel tanker.

## 1.A.19 Criterion 23 - Protection System Failure Modes

### 1.A.19.1 Requirements

"The protection system shall be designed to fail into a safe state or into a state demonstrated to be acceptable on some other defined basis if conditions such as disconnection of the system, loss of energy (e.g., electric power, instrument air), or postulated adverse environments (e.g., extreme heat or cold, fire, pressure, steam, water, and radiation) are experienced."

### 1.A.19.2 Discussion

The PPS consist of three independent instrument channels. Two of the three channels must be tripped to cause a reactor scram. The PPS circuitry has been designed so that component failure in, or loss of electrical power to, a PPS channel will cause that channel to trip. Trip of a single PPS channel will be annunciated in the control room, but will not cause a reactor scram.

## 1.A.20 Criterion 24 - Separation of Protection and Control Systems

### 1.A.20.1 Requirements

"The protection system shall be separated from control systems to the extent that failure of any single control system component or channel, or failure or removal from service of any single protection system component or channel which is common to the control and protection systems leaves intact a system satisfying all reliability, redundancy, and independence requirements of the protection system. Interconnection of the protection and control systems shall be limited so as to assure that safety is not significantly impaired."

### 1.A.20.2 Discussion

All PPS instrumentation is independent of control instrumentation. This independence is accomplished by buffering, isolation circuits, or other means required to meet the requirements of RDT Standard C 16-1T. The systems are designed in such a manner that removal of an instrument channel is interpreted as a trip indication from that channel to the PPS. The design intent is that (a) maximum use shall be made of information from each sensor and (b) such information not be arbitrarily excluded from use for control (see Section 9.2).

## 1.A.21 Criterion 25 - Protection System Requirements for Reactivity Control Malfunctions

### 1.A.21.1 Requirements

"The protection system shall be designed to assure that specified acceptable fuel design limits are not exceeded for any single malfunction of the reactivity control systems, such as accidental withdrawal (not ejection or dropout) of control rods."

1.A.21.2 Discussion

The rod control system and boron dilution system are designed in such a way that a single malfunction, such as accidental rod withdrawal or boron dilution, does not give excessive reactivity rates that would lead to performance outside the fuel design limits (see Sections 9.1.8 and 9.1.4).

Accident analyses related to malfunction of reactivity control devices are presented in Sections 15.2.2 and 15.2.5.

1.A.22 Criterion 26 - Reactivity Control System Redundancy and Capability

1.A.22.1 Requirements

"Two independent reactivity control systems of different design principles shall be provided. One of the systems shall use control rods, preferably including a positive means for inserting the rods, and shall be capable of reliably controlling reactivity changes to assure that under conditions of normal operations, including anticipated operational occurrences, and with appropriate margin for malfunctions such as stuck rods, specified acceptable fuel design limits are not exceeded. The second reactivity control system shall be capable of reliably controlling the rate of reactivity changes resulting from the planned normal power changes (including xenon burnout) to assure acceptable fuel design limits are not exceeded. One of the systems shall be capable of holding the reactor core subcritical under cold conditions."

1.A.22.2 Discussion

This criterion is met by control rods and soluble boron addition to, or removal from, the primary coolant. Each system has the capability of controlling the rate of reactivity changes resulting from planned, normal power changes for LOFT. The rod control system is capable of shutting down the reactor with one rod stuck out under conditions of normal operations, including anticipated operational occurrences.

The boron addition system is capable of holding the reactor subcritical under cold conditions (see Sections 9.1.8 and 4.2.2.1).

1.A.23 Criterion 27 - Combined Reactivity Control Systems Capability

1.A.23.1 Requirements

"The reactivity control systems shall be designed to have a combined capability, in conjunction with poison addition by the emergency core cooling system, of reliably controlling reactivity changes to assure that under postulated accident conditions and with appropriate margin for stuck rods the capability to cool the core is maintained."

1.A.23.2 Discussion

One reactivity control system, consisting of four CRAs, is provided to rapidly make the core subcritical upon a scram signal even if one rod assembly fails to enter the core, and to protect the core from damage due to the effects of any operating transient. The soluble absorber (boron) reactivity control system can make the reactor subcritical, even from full power. Its action is slow, however, and its ability to protect the core from damage which might result from rapid load changes, such as a steam stop closure, is not a design criterion for this system.

The reactor control is designed with the capability of providing a shutdown margin of a least 1% $\Delta k/k$ with the single most reactive control rod fully withdrawn at any point in core life with the reactor at hot zero-power conditions (see Sections 4.2.2.1.3 and 15.2.3.4).

Reactor subcritical margin is maintained during cooldown by changes in soluble boron concentration. The rate of reactivity compensation from boron addition is greater than the reactivity change associated with the maximum allowable reactor cooldown rate of 100°F/hr. Subcriticality is thus

assured during cooldown with the most reactive control rod totally unavailable.

## 1.A.24 Criterion 28 - Reactivity Limits

### 1.A.24.1 Requirements

"The reactivity control systems shall be designed with appropriate limits on the potential amount and rate of reactivity increase to assure that the effects of postulated reactivity accidents can neither (1) result in damage to the reactor coolant pressure boundary greater than limited local yielding nor (2) sufficiently disturb the core, its support structures or other reactor pressure vessel internals to impair significantly the capability to cool the core. These postulated reactivity accidents shall include consideration of rod ejection (unless prevented by positive means), rod dropout, steam line rupture, changes in reactor coolant temperature and pressure, and cold water addition."

### 1.A.24.2 Discussion

The reactor design meets this criterion by safety features which limit the maximum reactivity insertion rate. These include a low rod speed, limited reactivity worth for the four control rods, and a maximum rate and volume of dilution water addition. Ejection of the maximum-worth control rod is prevented by a rod holddown structure, but even if such event could occur, it would not lead to further coolant boundary rupture or to internals damage which would interfere with ECC (see Sections 4.2.4.5, 15.3.4, 9.1.4, and 9.2).

## 1.A.25 Criterion 29 - Protection Against Anticipated Operational Occurrences

### 1.A.25.1 Requirements

"The protection and reactivity control systems shall be designed to assure an extremely high probability of accomplishing their safety functions in the event of anticipated operation occurrences."

1.A.25.2 Discussion

The protection and reactivity control systems have been designed using redundancy and diversity to assure proper operation in the event of anticipated operational occurrences. The systems are designed in such a way that a single failure will not prevent the systems from accomplishing the desired safety function (see Sections 9.1.8 and 9.2). The adequacy of the reactivity control system to protect against anticipated operational occurrences is analyzed in many subsections of Section 15.0.

1.A.26 Criterion 30 - Quality of Reactor Coolant Pressure Boundary

1.A.26.1 Requirements

"Components which are part of the reactor coolant pressure boundary shall be designed, fabricated, erected, and tested to the highest quality standards practical. Means shall be provided for detecting and, to the extent practical, identifying the location of the source of reactor coolant leakage."

1.A.26.2 Discussion

The LOFT primary coolant pressure boundary was designed and constructed to meet this criterion as evidenced by the following:

(1) Material selection, design, fabrication, inspection, and testing were performed in accordance with Section III of the ASME Code and applicable RDT standards (see Section 5.1.3).

(2) Instrumentation is provided to measure fluid volume change in the pressurizer and makeup system to indicate leakage from the primary coolant system (see Section 11.2.2.1).

1.A.27 Criterion 31 - Fracture Prevention of Reactor Coolant Pressure Boundary

1.A.27.1 Requirements

"The reactor coolant pressure boundary shall be designed with sufficient margin to assure that when stressed under

operating, maintenance, testing, and postulated accident conditions (1) the boundary behaves in a nonbrittle manner and (2) the probability of rapidly propagating fracture is minimized. The design shall reflect consideration of service temperatures and other conditions of the boundary material under operating, maintenance, testing, and postulated accident conditions and the uncertainties in determining (1) material properties, (2) the effects of irradiation on material properties, (3) residual, steady-state and transient stress, and (4) size of flaws."

1.A.27.2 Discussion

The primary coolant pressure boundary design meets this criterion by the following:

(1) Selection of reactor vessel wall material opposite the core to a specified Charpy-V-notch test result of 30 ft-lb or greater at +10°F.

(2) Determination of the fatigue usage factor resulting from expected states and transient loading during detailed design and stress analysis.

(3) Quality control procedures including permanent identification of materials and nondestructive testing for flaw identification.

(4) Operating restrictions to prevent failure resulting from increase in brittle fracture transition temperature owing to neutron irradiation. The reactor vessel is the only primary coolant system component exposed to a significant level of neutron irradiation and is, therefore, the only pressure boundary component subject to material irradiation damage. A material surveillance program (Appendix F to CDD 1.1.1.9[1-A-3]) will be employed, with a first-specimen withdrawal as discussed in Criterion 32, to monitor the radiation-induced shift in the NDTT. Calculations show that this shift should not begin to

occur till after approximately 5000 hr of full-power operation at the fluence level of Core I.

Analysis has shown no potential reactivity-induced conditions which will result in energy release to the primary system in the range expected to be absorbed by plastic deformation. (See Sections 15.3 and 15.3.4.)

### 1.A.28 Criterion 32 - Inspection of Reactor Coolant Pressure Boundary

#### 1.A.28.1 Requirements

"Components which are part of the reactor coolant pressure boundary shall be designed to permit (1) periodic inspection and testing of important areas and features to assess their structural and leaktight integrity, and (2) an appropriate material surveillance program for the reactor pressure vessel."

#### 1.A.28.2 Discussion

The primary coolant pressure boundary components meet this criterion. Access is provided for nondestructive testing during plant shutdown.

The primary coolant system will be hydrostatically tested in accordance with Section III of the ASME Code initially and in accordance with Section XI of the ASME Code for requalification.

The primary coolant system is designed for routine visual and volumetric examination of closure bolt assemblies, nozzles, welds, and other critical areas and to meet the inspectability requirements of Section XI of the ASME Code (see FSAR Section 5.4.1).

The requalification program to be employed for the reactor coolant pressure boundary will follow the guidelines provided in the LOFT MTA and ESF Requalification (Inservice Inspection) manual, Volume I[1-A-4].

The first reactor pressure vessel surveillance specimens will be withdrawn following exposure to 30% of the vessel design life based on a typical lifetime fluence of $2 \times 10^{19}$ $n/cm^2$ >1 MeV; 30% of design life corresponds to about 25,000 EFPH of operation with cores typical of Core I. This would require at least 13 core changes consisting of typical LOFT cores, each with a design lifetime of 2000 EFPH.

1.A.29 Criterion 33 - Reactor Coolant Makeup

1.A.29.1 Requirements

"A system to supply reactor coolant makeup for protection against small breaks in the reactor coolant pressure boundary shall be provided. The system safety function shall be to assure that specified acceptable fuel design limits are not exceeded as a result of reactor coolant loss due to leakage from the reactor coolant pressure boundary and rupture of small piping or other small components which are part of the boundary. The system shall be designed to assure that for onsite electric power system operation (assuming offsite power is not available) and for offsite electric power operation (assuming onsite power is not available) the system safety function can be accomplished using the piping, pumps, and valves used to maintain coolant inventory during normal reactor operation."

1.A.29.2 Discussion

Coolant makeup to the primary system is provided for protection against small breaks in the reactor pressure boundary by operation of the addition and control system (charging system) in the high-pressure injection (HPI) mode. HPI is initiated automatically by coincident signal of primary system pressure and low pressurizer level, by high containment pressure, or by high suppression tank pressure. Initiation of system action may be accomplished by the plant operator at any time and under any plant conditions.

Injection is provided through redundant pumps and pumping paths to assure that coolant reaches the primary system (see Section 5.2.4.1). Initiation setpoints have been determined to prevent exceeding acceptable fuel design limits. HPI will either maintain the primary system level and pressure or allow a controlled depressurization until core flood is initiated by the ECC accumulators, depending on the size of the small break.

The redundant HPI systems (HPIS) are designed in such a way that each operates to provide coolant injection utilizing separate vital power supplies. These vital power supplies are immediately available should loss of offsite power occur, and they continue to supply power should loss of onsite power occur as discussed under Criterion 17 (see Sections 7.2.2.1 and 11.2).

### 1.A.30 Criterion 34 - Residual Heat Removal

#### 1.A.30.1 Requirements

"A system to remove residual heat shall be provided. The system safety function shall be to transfer fission product decay heat and other residual heat from the reactor core at a rate such that specified acceptable fuel design limits and the design conditions of the reactor coolant pressure boundary are not exceeded.

"Suitable redundancy in components and features, and suitable interconnections, leak detection, and isolation capability shall be provided to assure that for onsite electric power system operation (assuming offsite power is not available) and for offsite electric power system operation (assuming onsite power is not available) the system safety function can be accomplished, assuming a single failure."

#### 1.A.30.2 Discussion

Normal residual heat removal is accomplished by dissipation of heat through the secondary system normal operating mode.

This procedure is continued until the primary system is below approximately 350°F, at which time residual heat removal may be transferred to the purification system using the NRHXs. Below a primary system pressure and temperature of 300 psi and 350°F, residual heat removal may also be accomplished by recirculation with either LPIS pump and either LPIS heat exchanger. The purification system mode is preferred when the primary system is not being significantly depressurized, whereas the LPIS mode is used primarily during the post-LOCE recovery period.

Residual and decay heat removal capability for PPS purposes is provided by a "feed-and-bleed" procedure utilizing the HPIS for injection and the primary coolant letdown valves for controlled bleeding. The procedure, which uses natural circulation of the primary system and the heat rejection capability of discharged coolant, is more than adequate to prevent exceeding acceptable fuel design limits and reactor pressure boundary design conditions while maintaining a pressurized and controllable primary coolant system.

The redundancy and reliability of the "feed-and-bleed" method of heat removal using PPS equipment, both during periods when operational systems and equipment are not available and during onsite-to-offsite-power transfers, is based upon the use of systems and subsystems of proven and tested integrity during these same conditions. A more detailed discussion of these systems or subsystems during the heat removal procedure is presented under Criterion 44.

## 1.A.31 Criterion 35 - Emergency Core Cooling

### 1.A.31.1 Requirements

"A system to provide abundant emergency core cooling shall be provided. The system safety function shall be to transfer heat from the reactor core following any loss of reactor coolant at a rate such that (1) fuel and clad damage

that could interfere with continued effective core cooling is prevented and (2) clad metal-water reaction is limited to negligible amounts.

"Suitable redundancy in components and features, and suitable interconnections, leak detection, isolation, and containment capabilities shall be provided to assure that for onsite electric power system operation (assuming offsite power is not available) and for offsite electric power system operation (assuming onsite power is not available) the system safety function can be accomplished, assuming a single failure."

1.A.31.2 Discussion

ECC is provided by pumped injection and pressurized accumulator tanks. This equipment prevents clad damage conditions (1) and (2) for the entire spectrum of primary coolant system failures ranging from the smallest leak to the complete severance of the largest primary coolant pipe. The ECCS is subdivided in such a way that there are two separate and independent strings, each including both pressure injection and pumped injection and each capable of providing 100% of the necessary core injection with only one of the two strings operating. The borated water storage tank (BWST) is shared by the pumped injection systems, whereas the accumulator tanks are each separate as well as being separate from the BWST. Sharing of the BWST by the pumped systems is not dependent upon single active components. An alternate source of injection coolant, though not required, is available for the HPIS and LPIS via the blowdown suppression tank. The accumulator tanks are passive components which are needed for only a short period of time after the accident. Their contents are injected through check valves if the primary system pressure drops below the accumulator pressure and thus no electric power or air supply is required for this function. Both pumped injection systems are designed for long-term continuous service and thus are limited only by

the supply of injection coolant. Recirculation for the LPIS is provided from the pressure reduction and decontamination sump or blowdown suppression tank for indefinite injection after exhaustion of stored coolant supplies.

The redundant ECC subsystems are designed in such a way that each string operates to provide coolant injection utilizing separate vital power supplies. These vital power supplies are immediately available should loss of offsite power occur, and they continue to supply power should loss of onsite power occur as discussed under Criterion 17. In addition, the accumulator isolation valves are designed to "fail open". (See Sections 7.2.2, 11.2, 11.11, and 15.3.)

## 1.A.32 Criterion 36 - Inspection of Emergency Core Cooling System

### 1.A.32.1 Requirements

"The emergency core cooling system shall be designed to permit appropriate periodic inspection of important components, such as spray rings in the reactor pressure vessel, water injection nozzles, and piping, to assure the integrity and capability of the system."

### 1.A.32.2 Discussion

Inspections of the ECCS piping and injection nozzles will be conducted following a thorough examination of the transients experienced during each LOCE. Where transients have exceeded the piping system design basis, a nondestructive testing inspection will be conducted. Inspections will also be conducted on a regular basis in accordance with appropriately selected inservice inspection guidelines (see Section 7.2.5).

## 1.A.33 Criterion 37 - Testing of Emergency Core Cooling System

### 1.A.33.1 Requirements

"The emergency core cooling system shall be designed to permit appropriate periodic pressure and functional testing to assure (1) the structural and leaktight integrity of its

components, (2) the operability and performance of the active components of the system, and (3) the operability of the system as a whole and, under conditions as close to design as practical, the performance of the full operational sequence that brings the system into operation, including operation of applicable portions of the protection system, the transfer between normal and emergency power sources, and the operation of the associated cooling water system."

1.A.33.2 Discussion

The ECCS is designed to permit periodic pressure tests of key structures and components through leak tests coupled with visual inspections during plant downtime periods. Operability and performance of active components, such as remotely operated valves and pumps, will be verified by actual operation with permanently installed test lines and fixed orifices with recirculation to adequate storage tanks. In addition to verification of flow at the intended rate, visual determination of valve operation will be performed at the valve location. The flow of the passive accumulators will be tested in a similar manner to assure operability and performance of these components and their associated isolation valves, check valves, and pressurizing system. Full operability of the system, including initiating signals and sequences and transfer of power sources, will be verified initially through system acceptance tests with complete system strings being tested at one time. These tests will utilize the actual plant initiating devices which determine abnormal pressure and level conditions by effecting system pressurization (similar to cold leak tests) and level changes. These acceptance tests may then be repeated periodically following post-LOCE recovery or at other scheduled plant downtimes to assure complete ECCS performance. ECCS components are designed to operate at full safety system capacity without requiring operation of the primary component cooling system (see Sections 7.2 and 9.2.2).

## 1.A.34 Criterion 38 - Containment Heat Removal

### 1.A.34.1 Requirements

"A system to remove heat from the reactor containment shall be provided. The system safety function shall be to reduce rapidly, consistent with the functioning of other associated systems, the containment pressure and temperature following any loss-of-coolant accident and maintain them at acceptably low levels.

"Suitable redundancy in components and features, and suitable interconnections, leak detection, isolation, and containment capabilities shall be provided to assure that for onsite electrical power system operation (assuming offsite power is not available) and for offsite electric power system operation (assuming onsite power is not available) the system safety function can be accomplished, assuming a single failure."

### 1.A.34.2 Discussion

Heat removal systems are not needed during the LOFT containment blowdown experiments or during the LOFT accident conditions to prevent the containment pressure from exceeding the design operating pressure (see Section 15.3.6.4). However, redundant spray systems are installed in the containment to minimize the fission product leakage when deemed advantageous.

Each of the spray pumps is connected to a different offsite power supply. Provisions are included in the design to switch either of the pumps to the onsite diesel generator power supply system in the event of a power outage. Since the spray system is not required to maintain the containment pressure below the design pressure, the switching of the power supply to the diesel generator source is not in the planned operating procedures.

## 1.A.35 Criterion 39 - Inspection of Containment Heat Removal System

### 1.A.35.1 Requirements

"The containment heat removal system shall be designed to permit appropriate periodic inspection of important components, such as the torus, sumps, spray nozzles and piping to assure the integrity and capability of the system."

### 1.A.35.2 Discussion

Heat removal systems are not needed to prevent containment pressure from exceeding design values under accident conditions. A containment spray system, installed for LOCEs, may be utilized for reducing containment pressure.

This containment spray system has provisions which permit periodic physical inspection of the major components. The system spray pumps, valves, and valve operators which have to be actuated are located in the containment vessel basement. Access to the basement area is permitted for inspection of system components during reactor operation and during shutdown after the blowdown and cleanup operations.

The spray header and nozzles of the spray system, which are located in the dome section of the containment vessel, can be visually inspected during reactor shutdown from the crane bridge access system. The sumps can also be inspected and the screens cleaned during shutdown.

## 1.A.36 Criterion 40 - Testing of Containment Heat Removal System

### 1.A.36.1 Requirements

"The containment heat removal system shall be designed to permit appropriate periodic pressure and functional testing to assure (1) the structural and leaktight integrity of its components, (2) the operability and performance of the active components of the system, and (3) the operability of the system as a whole, and, under conditions as close to the design as practical, the performance of the full operational

sequence that brings the system into operation, including operation of applicable portions of the protection system, the transfer between normal and emergency power sources, and the operation of the associated cooling water system."

1.A.36.2 Discussion

Heat removal systems are not needed to prevent containment pressure from exceeding design values under accident conditions. A containment spray system, installed for LOCEs, may be utilized for reducing containment pressure.

The pumps for this system will be individually tested by (a) opening the sump discharge valve and the block valve to the bypass line and (b) closing the block valve to the appropriate spray header. The pump will be started from the main control room by an operator and operated at design flow.

All remote-manual valves will be cycled from the main control room by operator action when the pump is not operating.

Hydrostatic tests will be performed following major maintenance work on pressure parts before performing the next experiment.

The spray nozzles for this system will be inspected visually between tests to ensure that the openings are open. The visual inspection will be accomplished from the containment access platform on the circular crane in the containment vessel test chamber.

Since the spray system is a single-pass system, no external cooling water is needed to cool the spray water. The stored water supply consists of 10,000 gal in the pressure reduction-decontamination solution sump. The transfer of the power supply to the diesel generator source is not in the planned operating procedures (see Criterion 38).

## 1.A.37 Criterion 41 - Containment Atmosphere Cleanup

### 1.A.37.1 Requirements

"Systems to control fission products, hydrogen, oxygen, and other substances which may be released into the reactor containment shall be provided as necessary to reduce, consistent with the functioning of other associated systems, the concentration and quality of fission products released to the environment following postulated accidents, and to control the concentration of hydrogen or oxygen and other substances in the containment atmosphere following postulated accidents to assure that containment integrity is maintained.

"Each system shall have suitable redundancy in components and features, and suitable interconnections, leak detection, isolation, and containment capabilities to assure that for onsite electric power system operation (assuming offsite power is not available) and for offsite electric power system operation (assuming onsite power is not available) its safety function can be accomplished, assuming a single failure."

### 1.A.37.2 Discussion

The LOFT containment vessel atmosphere cleanup system consists of a recirculating filter system which is used to reduce the concentrations of radioactive airborne contaminants (see Section 6.4.2). As is shown in Appendix 13-D, the hydrogen generation during an accident will be significantly below the explosive concentration. Hydrogen recombiners are therefore not necessary. Hydrogen detection instruments are to be employed, however, in the containment environment (see Section 6.7).

The containment filter system is external to the containment vessel with connections to the containment atmosphere. The system is designed to operate only when the containment pressure is reduced to near outside atmospheric pressure.

Precautions have been taken in the design to ensure a leak-tight recirculating system. Redundant fans are employed to provide airflow through the system and to provide adsorber cooling. Both of the fans are powered by the commercial electrical supply.

## 1.A.38 Criterion 42 - Inspection of Containment Atmosphere Cleanup Systems

### 1.A.38.1 Requirements

"The containment atmosphere cleanup system shall be designed to permit appropriate periodic inspection of important components, such as filter frames, ducts, and piping to assure the integrity and capability of the system."

### 1.A.38.2 Discussion

This criterion is met by the design of the containment air cleanup system (see Section 6.4). The components for the cleanup system are located outside the containment vessel. The fans, ducts, and filter vaults have inspection ports so that the components can be visually inspected. Because of the radiation levels due to reactor operation, the filter vaults, which include the filter housing, and some of the ducting and valves can only be inspected during reactor shutdown between tests. The fans and the remaining portion of the ducting and valves are in shielded areas so that they can be inspected between tests and during reactor operation.

## 1.A.39 Criterion 43 - Testing of Containment Atmosphere Cleanup Systems

### 1.A.39.1 Requirements

"The containment atmosphere cleanup systems shall be designed to permit appropriate periodic pressure and functional testing to assure (1) the structural and leaktight integrity of its components, (2) the operability and performance of the active components of the systems such as fans, filters, dampers, pumps, and valves and (3) the operability of the systems as a whole and, under conditions as close to design as practical,

the performance of the full operational sequence that brings the systems into operation, including operation of applicable portions of the protection system, the transfer between normal and emergency power sources, and the operation of associated systems."

1.A.39.2 Discussion

The fans for the containment air cleanup system are used for both the containment HV system and the filter system (see Section 6.4). Periodic inspection and testing of these fans will be made on a routine basis.

The valves, dampers, and heaters will be inspected and tested for operability prior to the reactor startup for the conduct of each LOFT experiment.

The HEPA filters and charcoal adsorbers will be tested periodically "in situ" to ensure that leaks around the filters have not developed. In addition to the DOP and freon testing, the system will be operated at the rated capacity to ensure that the pressure drop across each filter bank is within the allowable range. If the pressure drop is abnormal, the filters or adsorbers will be replaced (see Section 6.4). Since the system will be operated after the containment pressure has been reduced to near atmospheric pressure, only commercial power will be used in the normal operating procedure; however, procedures are included in the design to switch either of the fans to diesel power in the event of a commercial power outage.

1.A.40 Criterion 44 - Cooling Water

1.A.40.1 Requirements

"A system to transfer heat from structures, systems, and components important to safety, to an ultimate heat sink shall be provided. The system safety function shall be to transfer the combined heat load of these structures, systems, and components under normal operating and accident conditions.

"Suitable redundancy in components and features, and suitable interconnections, leak detection, and isolation capabilities shall be provided to assure that for onsite electric power system operation (assuming offsite power is not available) and for offsite electric power system operation (assuming onsite power is not available) the system safety function can be accomplished, assuming a single failure."

1.A.40.2 Discussion

The primary component cooling system is a closed circulating system for heat removal from components such as the primary coolant pumps, the CRDMs, and the purification and sampling heat exchangers. In addition, the system supplies cooling to the heat exchangers located on each LPIS pump discharge line which are used for "normal" long-term core or suppression tank recirculation cooling. Loss of the ability to cool any of these functions does not break the integrity of the primary coolant pressure boundary and does not result in a plant safety hazard. The CRDMs do not require cooling after de-energization (rod dropping). The primary coolant pumps will suffer only a decrease in expected insulation lifetime if de-energized and allowed to coast down upon loss of cooling water to the pumps. The remaining components utilizing component cooling system water are not required to be operated in a postaccident situation. Parallel pumping paths, pumps, and heat exchanger circuits are provided in the component cooling system to assure protection of cooled equipment; however, the primary system pressure boundary and control of the nuclear process is maintainable without reliance upon the system's cooling capability.

The ultimate heat sink for the component cooling water system is service water from the water supply and fire protection system (see Section 11.10). This system includes two 1000-gpm deep well pumps tapping the Snake River Plain Aquifer, which contains an estimated 250 million acre-ft of water.

The system also includes a 480,000-gal storage tank which is maintained above the 430,000-gal level by automatic pump initiation. Heated water rejected from the component cooling water system is ultimately discharged to the disposal pond.

The PPS or ultimate method of residual and decay heat removal utilizes equipment designed as safety components and provided with emergency power and actuation circuits. In utilizing this method of decay heat removal (see Section 11.8.3.5), cold borated water is added to the primary system by the HPIS, and heated primary water is bled from the system through either of two special drag disc letdown valves. In some circumstances the primary system relief valves may assist in this heat removal process. The HPIS consists of parallel paths, pumps, and injection points (as for ECC injection) to assure delivery of sufficient feed-and-bleed coolant. Operability and integrity of this system is verified in conjunction with the identical requirement of the system in the HPI mode of operation. Redundant and separate bleed paths from the primary coolant system, each capable of discharging the maximum single HPI circuit capacity, are provided to assure adequate coolant (and heat) rejection. In addition, for primary coolant temperatures above approximately 350°F, the secondary coolant system, in conjunction with natural circulation through the steam generator, may be used to augment the feed-and-bleed method of heat removal (see Sections 5.2.4.1, 7.2, and 11.3).

The ultimate heat sink for the feed-and-bleed method of decay heat removal is the BWST (contains about 24,000 gal) and the backup sources of borated water which include the blowdown suppression tank (about 15,000 gal), the pressure reduction and decontamination solution sump (about 10,000 gal), and manual makeup of additional borated water. The BWST contents alone are sufficient to supply one HPIS pump at full capability (27 gpm) for about 15 hr. This is believed

to be ample time to start borated water makeup operations or other alternatives for decay heat removal that would protect the fuel from overheating for an indefinite period of time.

The component cooling water system, although not essential for accident protection, will normally be available for residual heat removal service and can be functionally tested at any time.

1.A.41 Criterion 45 - Inspection of Cooling Water System

1.A.41.1 Requirements

"The cooling water system shall be designed to permit appropriate periodic inspection of important components, such as heat exchangers and piping, to assure the integrity and capability of the system."

1.A.41.2 Discussion

Inspection of the system(s) used for removal of reactor plant heat is accomplished in conjunction with inspection of the HPIS and primary coolant system discussed in Criteria 36 and 32 (see Section 11.3). Most of the component cooling water system components are located in an accessible area of the containment vessel basement.

1.A.42 Criterion 46 - Testing of Cooling Water System

1.A.42.1 Requirements

"The cooling water system shall be designed to permit appropriate periodic pressure and functional testing to assure (1) the structural and leaktight integrity of its components, (2) the operability and the performance of the active components of the system, and (3) the operability of the system as a whole and, under conditions as close to design as practical, the performance of the full operational sequence that brings the system into operation for reactor shutdown and for loss-of-coolant accidents, including operation of applicable portions of the protection system and the transfer between normal and emergency power sources."

1.A.42.2 Discussion

Testing of the feed-and-bleed system used for removal of

reactor plant heat on loss of cooling water is accomplished in conjunction with testing of the HPIS discussed in Criterion 37.

In addition, the initial acceptance testing of the LOFT primary coolant and associated systems will verify bleed valve operation according to intended operational modes for PPS decay and residual heat removal procedures. These acceptance tests will then be repeated periodically following post-LOCE recovery or other scheduled plant downtimes to assure adequate operability. Drag disc valve operation and operation of the isolation valve in series with the drag disc valve will be tested periodically with the primary system at operating pressure and with flow through the valves. The test will verify that adequate bleed capability is afforded by either drag disc valve.

### 1.A.43 Criterion 50 - Containment Design Basis

#### 1.A.43.1 Requirements

"The reactor containment structure, including access openings, penetrations, and the containment heat removal system shall be designed so that the containment structure and its internal compartments can accommodate, without exceeding the design leakage rate and, with sufficient margin, the calculated pressure and temperature conditions resulting from any loss-of-coolant accident. This margin shall reflect consideration of (1) the effects of potential energy sources which have not been included in the determination of the peak conditions, such as energy in steam generators and energy from metal-water and other chemical reactions that may result from degraded emergency core cooling functioning, (2) the limited experience and experimental data available for defining accident phenomena and containment responses, and (3) the conservatism of the calculational model and input parameters."

1.A.43.2 Discussion

The LOFT containment vessel and the attached access and service penetrations are designed to operate at the design internal pressure of 36 psig and 260°F without exceeding the containment design leak rate (see Sections 6.1.3 and 6.1.4). These design conditions exceed the peak predicted accident pressure conditions described in Section 15.2.6.4 by about a factor of 4. Because of this large safety factor, a sufficient margin has been included in the design to account for (a) the additional energy sources from degraded ECC functioning and (b) the uncertainties in determining accident phenomena and containment response.

1.A.44 Criterion 51 - Fracture Prevention of Containment Pressure Boundary

1.A.44.1 Requirements

"The reactor containment boundary shall be designed with sufficient margin to assure that under operating, maintenance, testing, and postulated accident conditions (1) its ferritic materials behave in a nonbrittle manner and (2) the probability of rapidly propagating fracture is minimized. The design shall reflect consideration of service temperatures and other conditions of the containment boundary material during operation, maintenance, testing, and postulated accident conditions, and the uncertainties in determining (1) material properties, (2) residual, steady state, and transient stresses, and (3) size of flaws."

1.A.44.2 Discussion

Notch ductility of materials experiencing a ductility transition has already been determined at the lowest temperature required by design criteria and has been found satisfactory. The Charpy V-notch test, as required in Appendix 6-C (Section 6.C.4), is inherently more severe than the fracture mechanics approach (see ASTM Tentative Test Method E399-70T), primarily because of the rapid application of the

load. The fracture mechanics approach, on the other hand, will prevent the rejection of some materials that are actually safe but fail the Charpy test. Since the Charpy tests have been specified, the materials used meet the intent of this criterion, and no fracture mechanics testing is required. Operating procedures will require that the plant not be pressurized anytime the containment metal temperature falls below -20°F.

1.A.45 Criterion 52 - Capability for Containment Leakage Rate Testing

1.A.45.1 Requirements

"The reactor containment and other equipment which may be subjected to containment test conditions shall be designed so that periodic integrated leakage rate testing can be conducted at containment design pressure."

1.A.45.2 Discussion

The LOFT containment vessel is designed to perform periodic integrated leak rate tests at the maximum design pressure. The testing program which satisfies this requirement is discussed in Section 6.6 and Appendix 6-D.

1.A.46 Criterion 53 - Provisions for Containment Testing and Inspection

1.A.46.1 Requirements

"The reactor containment shall be designed to permit (1) appropriate periodic inspection of all important areas, such as penetrations, (2) an appropriate surveillance program, and (3) periodic testing at containment design pressure of the leaktightness of penetrations which have resilient seals and expansion bellows."

1.A.46.2 Discussion

The major access and service penetrations and seals of the LOFT containment vessel are designed to permit inspection during reactor shutdown. A surveillance program of the resilient seals is planned in accordance with the requirements

of the proposed guidelines in Appendix J to 10 CFR Part 50[1-A-1]. Periodic tests will be conducted on these seals as outlined in Appendix 6-D.

1.A.47 Criterion 54 - Piping Systems Penetrating Containment

1.A.47.1 Requirements

"Piping systems penetrating primary reactor containment shall be provided with leak detection, isolation, and containment capabilities having redundancy, reliability, and performance capabilities which reflect the importance to safety of isolating these piping systems. Such piping systems shall be designed with a capability to test periodically the operability of the isolation valves and associated apparatus and to determine if valve leakage is within acceptable limits."

1.A.47.2 Discussion

The piping systems penetrating the containment vessel are provided with isolation capabilities as discussed in Section 6.2. Piping penetration isolation valves connected to the containment atmosphere will be leak-tested periodically in accordance with Appendix J to 10 CFR Part 50, as described in Section 6.1.6 and Appendix 6-D, to maintain the containment leaktightness. Testing provisions are also included on the other piping penetration isolation valves to test each set of isolation valves individually for leaktightness.

1.A.48 Criterion 55 - Reactor Coolant Pressure Boundary Penetrating Containment

1.A.48.1 Requirements

"Each line that is part of the reactor coolant pressure boundary and that penetrates primary reactor containment shall be provided with containment isolation valves as follows, unless it can be demonstrated that the containment isolation provisions for a specific class of lines, such as instrument lines, are acceptable on some other defined basis:

(1) One locked closed isolation valve inside and one locked closed isolation valve outside containment; or

(2) One automatic isolation valve inside and one locked closed isolation valve outside containment; or

(3) One locked closed isolation valve inside and one automatic isolation valve outside containment. A simple check valve may not be used as the automatic isolation valve outside containment; or

(4) One automatic isolation valve inside and one automatic isolation valve outside containment. A simple check valve may not be used as the automatic isolation valve outside containment.

"Isolation valves outside containment shall be located as close to containment as practical and upon loss of actuating power, automatic isolation valves shall be designed to take the position that provides greater safety.

"Other appropriate requirements to minimize the probability or consequences of an accidental rupture of these lines or of lines connected to them shall be provided, as necessary, to assure adequate safety. Determination of the appropriateness of these requirements, such as higher quality in design, fabrication, and testing, additional provisions for inservice inspection, protection against more severe natural phenomena, and additional isolation valves and containment, shall include consideration of the population density, use characteristics, and physical characteristics of the site environs."

1.A.48.2 Discussion

Each line that is part of the primary coolant system and that penetrates the containment vessel is provided with an isolation valve both on the inside and the outside of the containment vessel penetrations. The types of isolation valves used and their isolation positions to meet the requirements stated above are discussed in detail in Section 6.2. The isolation valves are located as close as practicable to the vessel

penetration to minimize the possibility of an accidental rupture of system piping between the isolation valves.

## 1.A.49 Criterion 56 - Primary Containment Isolation

### 1.A.49.1 Requirements

"Each line that connects directly to the containment atmosphere and penetrates primary reactor containment shall be provided with containment isolation valves as follows, unless it can be demonstrated that the containment isolation provisions for a specific class of lines, such as instrument lines, are acceptable on some other defined basis:

(1) One locked closed isolation valve inside and one locked closed isolation valve outside containment; or

(2) One automatic isolation valve inside and one locked closed isolation valve outside containment; or

(3) One locked closed isolation valve inside and one automatic isolation valve outside containment. A simple check valve may not be used as the automatic isolation valve outside containment; or

(4) One automatic isolation valve inside and one automatic isolation valve outside containment. A simple check valve may not be used as the automatic isolation valve outside containment.

"Isolation valves outside containment shall be located as close to the containment as practical and upon loss of actuating power, automatic isolation valves shall be designed to take the position that provides greater safety."

### 1.A.49.2 Discussion

Each line connected directly to the containment atmosphere which penetrates the containment vessel is provided with two redundant isolation valves. The valving location is in accordance with the above requirements with the exception of the HV penetrations, which have a series of two isolation valves located outside the containment vessel. A detailed description of the isolation valve design is given in Section 6.2.

## 1.A.50 Criterion 57 - Closed System Isolation Valves

### 1.A.50.1 Requirements

"Each line that penetrates primary reactor containment and is neither part of the reactor coolant pressure boundary nor connected directly to the containment atmosphere shall have at least one containment isolation valve which shall be either automatic, or locked closed, or capable of remote manual operation. This valve shall be outside containment and located as close to the containment as practical. A simple check valve may not be used as the automatic isolation valve."

### 1.A.50.2 Discussion

Each line that penetrates the containment vessel and is neither part of the primary system nor connected directly to the containment atmosphere has been designed to have one isolation valve outside the containment vessel, which satisfies the intent of this criterion. A detailed description of the isolation valve design is given in Section 6.2.

## 1.A.51 Criterion 60 - Control of Releases of Radioactive Materials to the Environment

### 1.A.51.1 Requirements

"The nuclear power unit design shall include means to control suitably the release of radioactive materials in gaseous and liquid effluents and to handle radioactive solid wastes produced during normal reactor operation, including anticipated operational occurrences. Sufficient holdup capacity shall be provided for retention of gaseous and liquid effluents containing radioactive materials, particularly where unfavorable site environmental conditions can be expected to impose the release of such effluents to the environment."

### 1.A.51.2 Discussion

The gaseous, liquid, and solid waste storage facilities are discussed in Section 13.1, wherein it is demonstrated that

the release of radioactive contaminants will be within the applicable guidelines of AECM 0524. Radioactive gaseous and liquid waste will be sampled before release and will be monitored for activity level at all times during release.

Any large gaseous fission product release resulting from a blowdown LOCE will be held up and contained in the blowdown suppression tank or the containment vessel. Releases from a LOCA will be held up in the containment vessel. Subsequently these gases will be filtered to reduce the particulate and halogen activity prior to being released to the outside environs. It will be facility policy to make releases only under favorable meteorological conditions which assure adequate atmospheric dilution.

The air from the portions of support facilities that is released on a continuous basis and could contain airborne radioactive contaminants is filtered through a HEPA filter and charcoal adsorber to minimize the release of radioactive contaminants through the stack to the outside.

## 1.A.52 Criterion 61 - Fuel Storage and Handling and Radioactivity Control

### 1.A.52.1 Requirements

"The fuel storage and handling, radioactive waste, and other systems which may contain radioactivity shall be designed to assure adequate safety under normal and postulated accident conditions. These systems shall be designed (1) with a capability to permit appropriate periodic inspection and testing of components important to safety, (2) with suitable shielding for radiation protection, (3) with appropriate containment, confinements, and filtering systems, (4) with a residual heat removal capability having reliability and testability that reflects the importance to safety of decay heat and other residual heat removal, and (5) to prevent significant reduction in fuel storage coolant inventory under accident conditions."

1.A.52.2 Discussion

All fuel handling equipment will be inspected and tested prior to each use in accordance with detailed procedures (see Section 11.9.2.3).

Shielding to meet the requirements of AECM 0524 is provided for the protection of operating personnel during all phases of spent fuel removal and storage (see Section 11.9.2.3).

Double seals are provided on all applicable fuel handling equipment to preclude the release of fission products to the environment in either liquid or gaseous form (see Section 11.9.2.3).

A decay heat removal system with redundant components is provided for the spent fuel transfer cask. The hot shop storage pool isolation tank is also provided with a redundant system for water cleanup and decay heat removal capability for stored fuel (see Section 11.9).

To prevent the loss of fuel storage coolant, the drain line valves in the main pool and the isolation tank cleanup systems are tagged and locked at all times (see Section 11.9.1.3).

1.A.53 Criterion 62 - Prevention of Criticality in Fuel Storage and Handling

1.A.53.1 Requirements

"Criticality in the fuel storage and handling system shall be prevented by physical systems or processes, preferably by use of geometrically safe configurations."

1.A.53.2 Discussion

During reactor vessel head removal and while loading and unloading fuel from the reactor vessel, the primary coolant boron concentration will be maintained at not less than that required to shut down the core to a $k_{eff} \leq 0.90$ with all rod CRAs inserted. This concentration will be sufficient to maintain a $k_{eff} \leq 0.99$, even with all CRAs withdrawn.

The new and spent fuel storage racks are designed to maintain the fuel in a vertical array with an eversafe minimum geometric center-to-center distance between assemblies of 21.5 in. to assure $k_{eff} \leq 0.93$, even if unborated water is present. The design also precludes inserting fuel assemblies in other than prescribed locations (see Section 11.9).

1.A.54 Criterion 63 - Monitoring Fuel and Waste Storage

1.A.54.1 Requirements

"Appropriate systems shall be provided in fuel storage and radioactive waste systems and associated handling areas (1) to detect conditions that may result in loss of residual heat removal capability and excessive radiation levels and (2) to initiate appropriate safety actions."

1.A.54.2 Discussion

Fuel storage and handling areas have radiation monitoring and alarm instrumentation installed to indicate excessive radiation levels as discussed in Section 11.9.2.3.

All refueling operations will be carried out in accordance with the procedures described in Section 11.9.2.

Monitors and alarms installed in the waste storage and processing areas will warn of excessive radiation levels as discussed in Section 13.1.2.

1.A.55 Criterion 64 - Monitoring Radioactivity Release

1.A.55.1 Requirements

"Means shall be provided for monitoring the reactor containment atmosphere, spaces containing components for recirculation of loss-of-coolant accident fluids, effluent discharge paths, and the plant environs for radioactivity that may be released from normal operations, including anticipated operational occurrences, and from postulated accidents."

1.A.55.2 Discussion

The containment vessel atmosphere is heated and cooled during reactor operations by a combination recirculation and makeup-exhaust HV system located outside the containment vessel (see Section 6.4). The exhaust air from the containment vessel is monitored by the stack effluent monitoring system (see Section 13.2). The containment atmosphere will also be continuously monitored during reactor operations by a containment atmosphere sampling system (see Section 6.8). If either of these systems indicates excessive air activity, the containment vessel will be isolated. The containment vessel will also be isolated during a planned blowdown or an accident.

Potential sources of airborne radioactive contaminants that could be released from the support facility, such as radioactive sump vents, high-level radioactive storage tank vents, etc., will be vented through a HEPA filter-charcoal adsorber system prior to being released to the environs (see Section 11.7.2.4).

Area detectors are permanently installed in the potentially radioactive locations in the plant and in the facility environs. These detectors will indicate if any increase of radioactive contaminants occurs in the plant. The radiation monitors provided in the facility are given in Section 13.2. In addition, portable monitors are available onsite for supplemental surveys if necessary.

Leakage of radioactive liquid effluent into the service water system is determined by samples taken and by a monitor on the cooling water discharge line. This monitor is used for normal operational protection as well as for accident conditions. The effluent from the liquid waste disposal system is sampled before discharge, and the release to the environment is calculated. The liquid monitor is described in Sections 13.1.2 and 13.2.

## 1.A.56 References[a]


1-A-1. U. S. Atomic Energy Commission, Code of Federal Regulations, Title 10 - Atomic Energy, Part 50, "Licensing of Production and Utilization Facilities":

(1) Appendix A, "General Design Criteria for Nuclear Power Plants"

(2) Appendix J, "Primary Reactor Containment Leakage Testing for Water-Cooled Power Reactors".

1-A-2. American Society of Mechanical Engineers, ASME Boiler and Pressure Vessel Code:

(1) Section III, "Nuclear Power Plant Components"

(2) Section XI, "Rules for Inservice Inspection of Nuclear Reactor Coolant Systems".

1-A-3. Aerojet Nuclear Company, LOFT Program Division, CDD 1.1.1.9, "Reactor Vessel".

1-A-4. Letter, H. L. Coplen, Aerojet Nuclear Company, to R. E. Swanson, USAEC Idaho Operations Office, "Submittal of ANC Approved Requalification Manual Volume I", HLC-1281-73 (December 14, 1973).


[a] Current issues unless otherwise indicated.

# APPENDIX 1-B

# LOFT CORE I DESIGN PARAMETERS

TABLE 1-B-I

LOFT CORE I DESIGN PARAMETERS

| Item | Parameter | Value or Description | |
|---|---|---|---|
| 1. | Hydraulic and Thermal Design Parameters | | |
| a. | Rated heat output, MW(t) | 55 (nominal) | |
| b. | Maximum overpower, % | 110 | |
| c. | System pressure (nominal at pressurizer)[a], psia | 2250 | |
| d. | System pressure (minimum steady state at pressurizer), psia | 2235 | |
| | | At Maximum ΔT | At Maximum Flow |
| e. | Minimum hot channel DNBR at nominal conditions | 1.58[b]/1.90[c] | 1.88[b]/2.18[c] |
| f. | Coolant flow | | |
| | (1) Total flow rate, lb/hr | $2.15 \times 10^6$ | $3.6 \times 10^6$ |
| | (2) Effective flow rate for heat transfer, lb/hr | $2.04 \times 10^6$ | $3.42 \times 10^6$ |
| | (3) Effective flow area for heat transfer, $ft^2$ | 1.78 | 1.78 |
| | (4) Average velocity along fuel rods, ft/sec | 7.1 | 12.0 |
| | (5) Average mass velocity, lb/hr-$ft^2$ | $1.14 \times 10^6$ | $1.92 \times 10^6$ |
| | (6) Core differential pressure, psid | 7 | 18 |
| | (7) Reactor vessel ΔP, psid | 12 | 32 |
| g. | Coolant temperatures, °F[d] | | |
| | (1) Nominal inlet (reactor vessel) | 543.7 | 557 |
| | (2) Average rise in vessel | 66 | 39.4 |
| | (3) Average rise in core | 68.6 | 41.3 |

[a] Other pressure may be calculated by use of flow and line sizes and a reactor vessel pressure drop of 52 psid at $4.67 \times 10^6$ lb/hr and a steam generator pressure drop of 30 psid at $3.50 \times 10^6$ lb/hr.

[b] Preliminary results using the Westinghouse Electric Corporation (WEC) W-3 correlation with THETA single-pin model. (THETA is not a subchannel analysis which uses hot channel factors.)

[c] Preliminary results using the Babcock & Wilcox (B&W) BW-2 correlation with THETA single-pin model. (THETA is not a subchannel analysis which uses hot channel factors.)

[d] Temperatures are to be based on having $T_{ave}$ about 575° at either flow rate.

TABLE 1-B-I (contd.)

| Item | Parameter | Value or Description | |
|---|---|---|---|
| | | At Maximum ΔT | At Maximum Flow |
| g. | Coolant temperatures, °F (contd.) | | |
| | (4) Average in core | 578.5 | 577.7 |
| | (5) Average in vessel | 576.8 | 576.7 |
| | (6) Nominal outlet of hot channel | 643 | 614 |
| h. | Average[a] film coefficient, Btu/hr-ft$^2$-°F | 4800 | |
| i. | Average[a] film temperature difference, °F | 47 | |
| j. | Heat transfer at 100% power | | |
| | (1) Active heat transfer surface area, ft$^2$ | 790 | |
| | (2) Average heat flux, Btu/hr-ft$^2$[b] | $2.37 \times 10^5$ | |
| | (3) Maximum heat flux, Btu/hr-ft$^2$[b] | $5.85 \times 10^5$ | |
| | (4) Average linear heat rate, kW/ft[b] | 7.7 | |
| | (5) Maximum linear heat rate, kW/ft[b] | 19 | |
| k. | Maximum clad surface temperature at nominal pressure, a flow rate of $3.6 \times 10^6$ lb/hr, and 100% power, °F | 662 | |
| l. | Fuel central temperature, °F | | |
| | (1) Maximum at 100% power (assuming $\int kdT$ = 93 W/cm) | 4350 | |
| | (2) Maximum at 100% overpower | 4575 | |
| m. | Thermal output, kW/ft at maximum overpower (max) | 20.9 | |
| n. | Active core length, ft | 5.5 | |

[a] Average values taken where axial and radial peak-core average values are 1.0.

[b] Peaking factors of 1.52 radial and 1.63 axial at a flow of $3.6 \times 10^6$ lb/hr.

TABLE 1-B-I (contd.)

| Item | Parameter | Value or Description | |
|---|---|---|---|
| 2. | Core Mechanical Design Parameters | At Maximum ΔT | At Maximum Flow |
| a. | Fuel assemblies | | |
| (1) | Design | 15 x 15□ | 12 x 12◺ |
| (2) | Number | 5 | 4 |
| (3) | Rod pitch, in. | 0.563 | 0.563 |
| (4) | Overall dimensions, in. | 8.426 | 7.4 x 7.4 x 10.5 |
| (5) | Total weight, lb | 722 | 257 |
| (6) | Number of spacer grids per assembly | 5 | 5 |
| (7) | Support tube material[a] | 304 ss and Zr-4 | 304 ss |
| (8) | Spacer grid material | Inconel 718 | Inconnel 718 |
| b. | Fuel Rods | | |
| (1) | Number | 1020 | 280 |
| (2) | Outside diameter, in. | 0.422 | 0.422 |
| (3) | Diametral gap, in. | 0.0075 | 0.0075 |
| (4) | Cladding thickness, in. | 0.0243 | 0.0243 |
| (5) | Cladding material | Zr-4 | Zr-4 |
| (6) | Fill gas | He | He |
| (7) | Fuel weight (as $UO_2$), lb | 2.5 | 2.5 |
| c. | Fuel pellets | | |
| (1) | Material | Sintered $UO_2$ | Sintered $UO_2$ |
| (2) | Density, % of theoretical | 93 | 93 |
| (3) | Diameter, in. | 0.3659 | 0.3659 |
| (4) | Length, in. | 0.6 | 0.6 |
| d. | CRAs | | |
| (1) | Neutron absorber | 80% Ag-15% In-5% Cd alloy | |
| (2) | Cladding material | 304 ss | |
| (3) | Cladding thickness, in. | 0.019 | |
| (4) | Number of clusters | 4 | |
| (5) | Number of control pins per cluster | 20 | |

[a] Physics data are based on zircaloy-4 support tube material.

TABLE 1-B-I (contd.)

| Item | Parameter | Value or Description | |
|---|---|---|---|
| 2. | Core Mechanical Design Parameters (contd.) | At Maximum ΔT | At Maximum Flow |
| | e. Core structure | | |
| | (1) Core barrel ID/OD, in. | 30/33 | |
| | (2) Downcomer filler ID/OD, in. | 37.0/57.2 | |
| | (3) Downcomer filler material | 304 L ss | |
| 3. | Preliminary Nuclear Design Data | | |
| | a. Structural characteristics | | |
| | (1) Fuel weight (as $UO_2$), lb | 3250 | |
| | (2) Clad weight, lb | 640 | |
| | (3) Core diameter, in. (equivalent) | 24 | |
| | (4) Core height, in. (active fuel) | 66 | |
| | (5) Number of fuel assemblies | Five 15 x 15□, four 12 x 12◺ | |
| | (6) Lifetime, EFPH | 2000 | |
| | (7) Fuel enrichment, at. % U-235 | 4.05 | |
| | b. Control characteristics-effective multiplication (BOL) | | |
| | (1) Cold, no power, clean | 1.25 | |
| | (2) Hot, no power, clean (540°F) | 1.16 | |
| | (3) Hot, rated power, Xe and Sm equilibrium | 1.07 | |
| | c. Total rod worth %, cold/hot | 11.4/15.6 | |
| | d. Boron concentrations | | |
| | (1) To shut down reactor with no rods inserted (clean), cold/hot ppm, $K_{eff}$ = 0.99 | 2100/1800 | |
| | (2) To control at power with no rods inserted (clean/equilibrium), (Xe and Sm), ppm, $K_{eff}$ = 1.0 | 1300/860 | |
| | (3) Inverse boron worth (hot), ppm/% Δρ | 129 | rods out |
| | (4) Inverse boron worth (cold), ppm/% Δρ | 101 | zero power |
| | e. Kinetic characteristic | | |
| | (1) Overall temp. coefficient (moderator + Doppler + fuel expansion)[a] | | |
| | (a) $T_{ave}$ = 68°F and 2200 ppm (Δρ/°F) | $-2.4 \times 10^{-5}$ | |
| | (b) $T_{ave}$ = 610°F and 100 ppm (Δρ/°F) | $-5.2 \times 10^{-4}$ | |

TABLE 1-B-I (contd.)

| Item | Parameter | Value or Description | |
|---|---|---|---|
| e. | Kinetic characteristic (contd.) | | |
| | (2) Moderator temperature coefficient | | |
| | (a) $T_{ave}$ = 68°F and 1990 ppm (Δρ/°F) | $-1.2 \times 10^{-5}$ | |
| | (b) $T_{ave}$ = 584°F and 1313 ppm (Δρ/°F) | $-3.2 \times 10^{-4}$ | |
| | (3) Fuel temperature coefficient (Doppler + expansion)[a] | | |
| | (a) $T_{ave}$ = 68°F and 1990 ppm (Δρ/°F) | $-1.5 \times 10^{-5}$ | |
| | (b) $T_{ave}$ = 584°F and 1313 ppm (Δρ/°F) | $-1.0 \times 10^{-5}$ | |
| | (4) Moderator void coefficient (Δρ/% void)[b] | $-2.0 \times 10^{-3}$ | |
| | (5) Moderator pressure coefficient (Δρ/psi)[b] | $+5.0 \times 10^{-6}$ | |
| f. | Control rod drives | | |
| | (1) Type | Roller nut | |
| | (2) Withdrawal rate, ipm | 2 | |
| | (3) Scram time, sec (90% insertion) | 2 | |
| 4. | Principal Design Parameters of Reactor Coolant System | Steady State Mode | Maximum ΔT Preblowdown Mode |
| a. | System heat output, MW(t) max | 55 | 55 |
| b. | System heat output, Btu/hr max | $1.88 \times 10^8$ | $1.88 \times 10^8$ |
| c. | Operating pressure, psia | 2250 | 2250 |
| d. | Reactor inlet temperature, °F | 543-557 | 543 |
| e. | Reactor outlet temperature, °F | 596-610 | 610 |
| f. | Number of loops | 1 plus blow-down loop | 1 plus blow-down loop |
| g. | Design pressure, psia | 2500 | 2500 |
| h. | Design temperature, °F | 650 | 650 |
| i. | Hydrostatic test pressure (cold), psia | 3125 | 3125 |

[a] Based on 4.05 at. % enriched fuel and BOL.

[b] Based on 3.45 at. % enriched fuel and BOL.

TABLE 1-B-I (contd.)

| Item | Parameter | Value or Description | |
|---|---|---|---|
| | | Steady State Mode | Maximum ΔT Preblowdown Mode |
| 4. | Principal Design Parameters of Reactor Coolant System (contd.) | | |
| | j. System volume[a], $ft^3$ | 272 | 272 |
| | k. Total reactor flow, lb/hr (at reactor vessel inlet and outlet) | $3.6 \times 10^6$ | $2.15 \times 10^6$ |
| | l. Total system ΔP[b], psid | 87.3 | 31.3 |
| | m. Heatup rate, °F/hr | 100(max) | N/A |
| | n. Cooldown rate, °F/hr | 100(max) | N/A |
| 5. | Principal Design Parameters of Secondary Coolant System | | |
| | a. Design heat removal capacity, MW(t) | 65 (nominal) | |
| | b. Design heat removal capacity, Btu/hr | $2.22 \times 10^8$ | |
| | c. High-pressure portion | | |
| | (1) Design pressure, psia | 1100 | |
| | (2) Design temperature, °F | 600 | |
| | (3) Operating pressure, psia [at 65 MW(t)] | 862-687[c] | |
| | (4) Operating temperature, °F | 527-501[c] | |
| | d. Low-pressure portion | | |
| | (1) Design pressure, psia | 400 | |
| | (2) Design temperature, °F | 450 | |
| | (3) Operating pressure, psia | 300 | |
| | (4) Operating temperature, °F | 417-407 | |
| | e. Total flow, lb/hr at nominal power | $2.72 \times 10^5$ | |

[a] Total fluid volume including blowdown system volume and steam volume of the pressurizer.

[b] System pressure drop includes orifices in the steam generator.

[c] Dependent on flow rate and fouling factor.

TABLE 1-B-I (contd.)

| Item | Parameter | Value or Description |
|---|---|---|
| 5. | Principal Design Parameters of Secondary Coolant System (contd.) | |
| | f. Total system ΔP | |
| | (1) At 65 MW(t) and high primary flow, no fouling factor, psid | 562 |
| | (2) At 65 MW(t) and low primary flow with 0.0003 fouling factor, psid | 387 |
| | g. Material | Carbon steel |
| | h. Heatup rate, °F/hr | 100 (max) [a] |
| | i. Cooldown rate, °F/hr | 100 (max) [a] |
| | j. Heat rejection system type | Fin fan air-cooled condenser |
| 6. | Principal Design Parameters of Reactor Vessel | |
| | a. Material | |
| | (1) Cylindrical portion | A-336 modified to Code Case 1332-1, clad with ASTM SA-371 ER 309L 1st pass and ER 308L 2nd pass |
| | (2) Head | A-302 Gr. B modified to Code Case 1339-1, roll bond clad with SA-264 Type 304 |
| | b. Design pressure, psia | 2500 |
| | c. Design temperature, °F | 650 |
| | d. Operating pressure, psia (nominal) | 2250 |
| | e. Inside diameter of cylindrical portion, in. | 57.6 |
| | f. Outside diameter of cylindrical portion, in. | 69-1/4 and 65-1/4 |
| | g. Outside diameter across nozzles, in. | 94 |
| | h. Overall height of vessel and closure head, in. | 283 |

[a] Steam generator only, remainder of system 300°F/hr.

TABLE 1-B-I (contd.)

| Item | Parameter | Value or Description |
|---|---|---|
| 6. | Principal Design Parameters of Reactor Vessel (contd.) | |
| i. | Minimum clad thickness, in. | 1/8 |
| j. | Number of coolant nozzles | 4 (2 inlets and 2 outlets) |
| k. | Number of ECCS injection nozzles | 2 |
| l. | Weight, lb (vessel empty) | 105,000 |
| m. | Heatup rate, °F/hr | 100 (max) |
| n. | Cooldown rate, °F/hr | 100 (max) |
| o. | NDTT, °F | +10 (initially) |
| p. | Nozzle "safe end" | Inconel or unsensitized austenitic stainless steel |
| 7. | Principal Design Parameters of Steam Generator | |
| a. | Number of units | 1 |
| b. | Type | Vertical U-tube |
| c. | Tube-side design pressure, psia | 2500 |
| d. | Tube-side design temperature, °F | 650 |
| e. | Tube-side design pressure, psia | $2.15 \times 10^6 - 3.6 \times 10^6$ |
| f. | Shell-side design pressure, psia | 1100 |
| g. | Shell-side design temperature, °F | 600 |
| h. | Operating inlet temperature, tube side, °F | 610 |
| i. | Operating outlet temperature, tube side, °F | 571.5 |
| j. | Operating pressure, tube side, nominal, psia | 2250 |
| k. | Operating pressure, shell side, nominal, psia | 400 to 1003 |
| l. | Operating steam temperature, shell side, nominal, °F | 444 to 545 |
| m. | Operating steamflow, shell side, nominal, lb/hr | $2.72 \times 10^5$ lb/hr |
| n. | Feedwater temperature, nominal, °F | 407 |

TABLE 1-B-I (contd.)

| Item | Parameter | Value or Description |
|---|---|---|
| 7. | Principal Design Parameters of Steam Generator (contd.) | |
| | o. Heatup rate, °F/hr | 100 (max) |
| | p. Cooldown rate, °F/hr | 100 (max) |
| | q. Weight | |
| | (1) Dry, lb | 75,000 |
| | (2) Flooded, lb | 95,000 |
| 8. | Principal Design Parameters of Primary Coolant Pumps | |
| | a. Number of units | 2 |
| | b. Type | Canned rotor |
| | c. Materials | |
| | (1) Rotor and stator cans | Inconel |
| | (2) Shaft | 304 and 410 ss |
| | (3) Volute | 304 ss |
| | d. Design pressure, psia | 2500 |
| | e. Design temperature, °F | 650 |
| | f. Operating pressure, nominal, psia | 2250 |
| | g. Design capacity, gpm | 5000 each |
| | h. Design total developed head, ft | 325 |
| | i. Motor type | Induction motor, canned rotor |
| | j. Motor rating, hp | 500 |
| 9. | Principal Design Parameters of Primary Coolant Piping | |
| | a. Material | 316 ss |
| | b. Hot leg (ID), in. and schedule | 11.188, 160 |
| | c. Cold leg (ID), in. and schedule | 11.188, 160 |
| | d. Between pump and steam generator (ID), in. and schedule | 11.188, 160 |
| | e. Hot leg (OD), in. and schedule | 14.00, 160 |

TABLE 1-B-I (contd.)

| Item | Parameter | Value or Description |
|---|---|---|
| 9. | Principal Design Parameters of Primary Coolant Piping (contd.) | |
| f. | Cold leg (OD), in. and schedule | 14.00, 160 |
| g. | Between pump and steam generator (OD), in. and schedule | 14.00, 160 |
| h. | Pumps suction and discharge (ID), in. and schedule | 8.500, 160 |
| i. | Pumps suction and discharge (OD), in. and schedule | 10.75, 160 |
| j. | Volumes, $ft^3$ | |
| | (1) Pipe and reactor vessel stubs for active loop | 36.3 |
| | (2) Steam generator | 49.4 |
| | (3) Primary coolant pumps | 7.0 |
| | (4) Pressurizer (total of liquid and vapor volumes) | 34.0 |
| 10. | Principal Design Parameters of Pressurizer | |
| a. | Material, pressure plate, cladding | SA-212, SA-212B-FBX, SB-162 |
| b. | Design pressure, psia | 2500 |
| c. | Design temperature, °F | 683 |
| d. | Operating pressure, psia | 2250 |
| e. | Volume, $ft^3$ | 34 |
| f. | Nominal water volume, $ft^3$ | 22.5 |
| g. | Nominal steam volume, $ft^3$ | 11.5 |
| h. | Outside diameter | 3 ft 3 in. |
| i. | Overall height | 9 ft 1/4 in. |
| j. | Weight dry, lb | 11,000 |
| k. | Heatup rate, °F/hr | 135 (max) |
| l. | Cooldown rate, °F/hr | 135 (max) |
| m. | Spray flow rate, gpm | 20 |
| n. | Total heater capacity, kW | 48 |

TABLE 1-B-I (contd.)

| Item | Parameter | Value or Description |
|---|---|---|
| 11. | Principal Design Parameters of Blowdown System | |
| | a. Pipe material | 316 ss |
| | b. Pipe size | |
| | (1) 14-in. Schedule 160, OD, in. | 14.00 |
| | ID, in. | 11.188 |
| | (2) 5-in. Schedule XX, OD, in. | 5.563 |
| | ID, in. | 4.063 |
| | c. Blowdown loop volume (including steam generator and pump simulators and reactor vessel nozzles) | 36.6 $ft^3$ |
| | d. Rupture initiation device and opening time | Quick-opening valve - 10-50 msec |
| 12. | MTA | |
| | a. Type | Four rails at three standard gauges railroad dolly |
| | b. Length | 50 ft 6 in. max |
| | c. Height, ft | 33 max available door opening |
| | d. Width, ft | 22 max available door opening |
| | e. Weight, tons | 778 max |
| 13. | Containment Vessel System Parameters | |
| | a. Type | Steel cylinder with hemispherical top head and torospherical bottom head. Consists of test chamber and basement separated by a steel membrane embedded in concrete. |
| | b. Design parameters | |
| | (1) Inside diameter, ft | 70 |
| | (2) Height, ft | 129 |
| | (3) Free volume, $ft^3$ | 360,000 |
| | c. Material | ASTM A516 Grade 70 |

TABLE 1-B-I (contd.)

| Item | Parameter | Value or Description |
|---|---|---|
| 13. | Containment Vessel System Parameters (contd.) | |
| | d. Steel thickness, in. | |
| | (1) Vertical wall | 1-3/16 |
| | (2) Lower head | 7/8 |
| | (3) Dome | 5/8 |
| | e. NDTT | |
| | (1) Code service metal temperature, °F | -20 |
| | (2) Tested Charpy impact, °F | -50 |
| | f. Design internal pressure, psig | 36 |
| | g. Max internal pressure rating, psig | 40 |
| | @ internal air-steam temperature, °F | 260 |
| | h. Uncontrolled leakage rate | 0.2% max per 24 hr of the weight of the dry air inside the vessel at an internal pressure of 36 psig corrected to the maximum expected temperature during the time of the leak rate test |
| | i. Insulation material | None |
| | j. Insulation thickness, in. | None |
| | k. Interior paint | |
| | (1) Bare metal primer | Phenoline 305 primer |
| | (2) Surface coat | Phenoline 305 |
| | l. Crane | |
| | (1) Type | Circular, overhead, top-riding bridge |
| | (2) Capacity, tons | 50/10 |
| | (3) Lift | |
| | (a) Above operating floor, ft | 60 |
| | (b) Below operating floor, ft | 23 |
| | (4) Coverage arc rotation - design maximum | 370° |

TABLE 1-B-I (contd.)

| Item | Parameter | Value or Description |
|---|---|---|
| 13. | Containment Vessel System Parameters (contd.) | |
| | b. Major opening sizes | |
| | (1) Railroad door, ft | 22 x 33 |
| | (2) Personnel airlocks ID/OD, ft-in. | 7 ft 9 in./8 ft |
| 14. | ECCS | |
| | a. Coolant composition | Borated water @ 3000 ppm natural boron |
| | b. Total initial stored volume for pumped ECC injection[a], gal | 24,000 |
| | c. High-pressure injection | |
| | (1) Number of high-head pumps | 2 |
| | (2) Design flow, gpm | 27 each pump |
| | (3) Initiation pressure, psig | 1800 |
| | (4) Coolant volume, gal[a] | 24,000 |
| | d. Low-pressure injection | |
| | (1) Number of low-head pumps | 2 |
| | (2) Design flow, gpm | 300 each |
| | (3) Initiation pressure, ft | 325 |
| | (4) Coolant volume, gal[a] | 24,000 |
| | e. Accumulator injection | |
| | (1) Number of accumulators | 2 |
| | (2) Initiation pressure, psig | 600 |
| | (3) Total volume, $ft^3$ | 128 and 126 each |
| | (4) Liquid volume, $ft^3$ | 87 and 86 each |
| | (5) Cover gas | Nitrogen |

[a] Both HPIS and LPIS take suction from the BWST during emergencies or experiments.

TABLE 1-B-I (contd.)

| Item | Parameter | Value or Description |
|---|---|---|
| 15. | Pressure Reduction-Decontamination Spray System | |
| | a. Type | Two independent pressure reduction systems with one system having the capability of also being used to satisfy the future decontamination requirements. |
| | b. Pumps | |
| | (1) Number | 2 |
| | (2) Design flow, gpm | 250 each (500 gpm total) |
| | (3) Design head, ft | 210 (pressure reduction) |
| | c. Spray (pressure reduction) | |
| | (1) Type | Solid cone fog nozzles |
| | (2) Total number | 14 each system (28 total) |
| | (3) Droplet size, μ | 600-700 |
| | d. Coolant | |
| | (1) Source capacity, gal[a] | 20,000 |
| | (2) Type | Borated water @ 3000 ppm natural boron |
| 16. | Emergency Power | |
| | a. Generator units | |
| | (1) Number | 2 |
| | (2) Rating | A - 500 kW; B - 1000 kW |
| | (3) Type | A - diesel, 800-hp; B - diesel, 1360-hp |
| | b. Battery units | |
| | (1) Number | 2 independent banks |
| | (2) Rating | 418 kW per bank (3-hr rating) |
| | (3) Type | 126 cells per bank of submarine type |

[a] Recirculation capability through floor drain system back to sump.

TABLE 1-B-I (contd.)

| Item | Parameter | Value or Description |
|---|---|---|
| 16. Emergency Power (contd.) | | |
| c. MG sets | | |
| | (1) Number | 2 |
| | (2) dc machine (each) | |
| | (a) Output (generator) | 300 kW |
| | (b) Voltage | 250-V dc (210-355 V) |
| | (c) Speed | 1200 rpm |
| | (d) Accessories | Speed/voltage regulator |
| | (3) ac machine (each) | |
| | (a) Output (generator) | 300 kW |
| | (b) Voltage | 460 V |
| | (c) Frequency | 60 Hz |
| | (d) Phase | 3-phase |
| | (e) Winding connection | Wye |
| | (f) Accessories | Voltage regulator |
| 17. Principal Design Parameters of Shield Tank | | |
| a. Type | | Right circular concentric cylinder |
| b. Material | | |
| | (1) Tank | Steel |
| | (2) Shield[a] | Water/lead/steel |
| c. Shield tank ID/OD | | |
| | (1) Upper | 6 ft 5-1/2 in./16 ft 11 in. |
| | (2) Lower | 6 ft 5-1/2 in./9 ft 5-1/2 in. |
| d. Shield tank height | | |
| | (1) Upper | 13 ft 2-1/2 in. |
| | (2) Lower | 2 ft 4-1/2 in. |
| e. Total weight, lb (wet) | | 351,000 |

[a] 3 in. of No. 8 leadshot and 3/4-in. steel is attached to the outside surface of the shield tank.

TABLE 1-B-I (contd.)

| Item | Parameter | Value or Description |
|---|---|---|
| 18. Principal Design Parameters of Waste System | | |
| a. Warm and chemical waste disposal | | |
| | (1) Type | Disposal pond |
| | (2) Capacity, gal | $18.0 \times 10^6$ |
| | (3) Radiation level limits, μCi/ml | $1.4 \times 10^{-2}$ |
| b. Hot waste | | |
| | (1) Type | Storage tanks |
| | (2) Number | 2 |
| | (3) Capacity, gal | 100,000 (50,000 each) |
| | (4) Tank material | 7/16-in.-thick ASTM A283 Grade C carbon steel |
| c. Cold waste disposal | | |
| | (1) Type | Injection well |
| | (2) Capacity, gpm | 1500 |
| | (3) Composition of waste water | Service water with naturally occurring levels of radioactivity and chemical contaminants |
| 19. Principal Design Parameters of Decay Heat Removal | | |
| a. Normal decay heat removal | | |
| | (1) Type | Primary coolant pump operation and steam on secondary side |
| | (2) Primary system flow rate, lb/hr | $2.15 \times 10^6 - 3.6 \times 10^6$ |
| | (3) Heat removal capacity | As required |
| b. Residual decay heat removal, including loss of site power to 350°F | | |
| | (1) Type | Natural circulation in primary system and steam on secondary side |
| | (2) Primary system flow rate | Decays to 80 gpm as pump speed reaches 0 rpm; then increases to 250 gpm by natural circulation. |
| | (3) Heat removal capacity | As required up to 32.5 MW(t) max |

TABLE 1-B-I (contd.)

| Item | Parameter | Value or Description |
|---|---|---|
| 19. | Principal Design Parameters of Decay Heat Removal (contd.) | |
| | c. Residual heat removal (from 350°F to ambient) (Method A) | |
| | (1) Type | Forced circulation system consisting of the purification pump and NRHX |
| | (2) Primary coolant system flow rate, gpm (by purification pump) | 50 |
| | (3) Heat removal capacity, Btu/hr (max) | $6.4 \times 10^6$ |
| | (4) Cooling water flow rate requirement, gpm (max) | 200 |
| | d. Residual heat removal (from 350°F to ambient) (Method B) | |
| | (1) Type | Forced circulation utilizing LPIS pump and heat exchanger |
| | (2) Primary coolant flow rate, gpm (max) | 226 |
| | (3) Heat removal capacity, Btu/hr (max) | $10.85 \times 10^6$ |
| | (4) Cooling water flow rate requirement, gpm (max) | 300 (component cooling water), 273 (service water) |
| 20. | Principal Design Parameters of Control Instrumentation System | |
| | a. Control circuitry | Solid state with relay interface to the other systems |
| | b. Type of control | Manual control with automatic scram |
| | c. PPS functions | |
| | (1) Number of scrams (total) | 9 plus manual(s) |
| | (a) Neutron flux | |
| | (i) Average neutron flux | 1 |
| | (ii) Peak neutron flux | 1 |
| | (b) Primary system | |
| | (i) Low reactor coolant flow | 1 |
| | (ii) High-temperature hot leg | 1 |

TABLE 1-B-I (contd.)

| Item | Parameter | Value or Description |
|---|---|---|
| 20. Principal Design Parameters of Control Instrumentation System (contd.) | | |
| | (iii) Low pressure | 1 |
| | (iv) High pressure | 1 |
| | (v) Low voltage at the primary pump bus | 1 |
| | (c) Miscellaneous | |
| | (i) Manual | 1 |
| | (ii) ECC or CIS reactor scram | 2 |

21. Radiation Levels

a. Dose rate limits for steady state and blowdown operations

| Area | Type of Access | Time of Occupancy | Dose Rate Limit |
|---|---|---|---|
| (1) Full-time occupancy | No restriction | 8 hr/day | 0.25 mrem/hr |
| (2) Full-time access | No restriction | Less than 8 hr/day | $2.5/t_1$ mrem/hr[a] |
| (3) Limited access | Routine entry for specific individuals | On the order of minutes per exposures | 7.5 mrem/hr |
| (4) Exclusion | Restricted and controlled | | $60/t_2$ mrem/hr[b] |

b. Dose rate limits for MHA

| Area | Dose Rate Limit |
|---|---|
| (1) Control and equipment building (TAN-630) (100 sec after accident) | 1.0 mrem/hr |
| (2) Interior of shielded roadway[c] | 7.5 mrem/hr |

[a] $t_1$ = Maximum average hours per day that any individual will work in the area.

[b] $t_2$ = Maximum average hours per day that an individual would be expected to work in area.

[c] The length of the shielded roadway is such that personnel walking (3 mph) from the exit to an area outside the 100-mrem/hr radiation field will not receive a whole body dose in excess of 5 rem.

CONTENTS

2.0 EXPERIMENTAL PROGRAM . . . . . 2-1

2.1 Scope and Objectives -- LOFT Integral Test Program . . . . . 2-1

2.2 Test Program Discussion . . . . . 2-2

2.3 Administrative Safeguards . . . . . 2-4

2.4 Experimental Envelope . . . . . 2-5

2.5 Preexperiment Analysis and Requalification . . . . . 2-5

2.5.1 Preexperiment Analysis . . . . . 2-5

2.5.2 Preexperiment Requalification . . . . . 2-7

2.6 References . . . . . 2-7

TABLE

2-I. Experimental Envelope Limits . . . . . 2-6

## 2.0 EXPERIMENTAL PROGRAM

### 2.1 Scope and Objectives -- LOFT Integral Test Program

The LOFT Program Requirements Document (PRD-1)[1] provides the basic LOFT Integral Test System programmatic design requirements necessary for an experimental reactor plant to fulfill the objectives of the LOFT program. The LOFT Measurement Requirements Document (MRD-1)[2] defines the active and passive measurements desired and their priority in fulfilling the LOFT program objectives. The LOFT Experimental Requirements Document (ERD-1)[3] provides the basis for the selection of the experimental program and identifies the test sequence to be carried out in the LOFT test facility. This section presents a brief summary of information contained in ERD-1.

The LOFT Integral Test Program objectives, which are principally concerned with the conduct of LOC-ECC experiments, are as follows:

(1) Provide data to industry for evaluation of their analytical methods and test the adequacy of analytical methods used by the AEC and its contractors to predict:

   (a) The transient thermal, mechanical, and nuclear response of the core and primary system components and the hydraulic behavior of the fluid

   (b) The capability of ECCS to fulfill their intended functions

   (c) The margins of safety inherent in the capability of a utility reactor ECCS.

(2) Verify the adequacy of the utility reactor design criteria commonly used to establish the capability of ECCS to fulfill their intended functions.

(3) Reveal thresholds or unexpected phenomena which affect:

   (a) The validity of the analytical models used to predict the thermal, mechanical, and nuclear response of the core and primary system components and the hydraulic behavior of the fluid

   (b) The selection of design parameters pertaining to the capability of ECCS to fulfill their intended functions

(c) The identification of the inherent design margins of ECCS.

(4) Test the adequacy of analytical methods used to predict LOC phenomena affecting the pressure-temperature response of the containment atmosphere with respect to the capability of the containment pressure reduction systems to fulfill their intended functions.

(5) Test the adequacy of analytical models used to predict:

(a) The magnitude, composition, and distribution of the fission products which reach the containment atmosphere in a LOCA in which an ECCS is applied

(b) The capability of containment and fission product safety systems to perform their intended functions.

(6) Determine whether unanticipated fission product behavior, which could not be predicted from analytical techniques based on simulant testing in smaller facilities, results from the coupling of phenomena in an integral LOCA.

The first three specified objectives indicate that the emphasis is on the capability of ECCS to fulfill their intended functions of mitigating the consequences of a LOCA. Because core thermal response is the primary basis for evaluating this capability, the first specific objective must be considered as overriding the others. The fourth, fifth, and sixth objectives are related to the capability of ESFs to mitigate the release of fission products to the environment.

## 2.2 Test Program Discussion

The LOFT Integral Test Program will consist of both nonnuclear and nuclear tests that utilize a blowdown loop to simulate ruptures in the primary coolant system piping. LOFT nonnuclear tests are defined as those tests which initially have isothermal conditions existing in the reactor coolant loop with no nuclear heat being produced throughout the test. Nuclear tests are defined as those tests where the reactor core is producing power and a coolant temperature differential exists across the core.

The LOFT nonnuclear tests will provide early confirmation that analytical techniques which predict the behavior of small-scale blowdown experiments are adequate for larger systems. These tests will investigate the effects of different degrees of fluid subcooling, as well as the influence of break size and ECC injection location on system response during blowdown. These tests will provide initial confirmation of several aspects of the analysis without the complicating effects of core heat transfer.

The general ordering of the nuclear tests is to begin with those that are expected to be the least damaging tests and progress toward the more demanding nuclear tests with increasing potential for high cladding temperatures, and thus cladding annealing and/or distortion that would preclude fuel reusability. This approach is utilized to:

(1) Maximize fuel reusability, thereby reducing program costs
(2) Provide early reasonable assurance that the experimental system will respond to LOCE conditions as planned
(3) Determine plant response, evaluate key areas of the experiments, and assess test prediction capabilities prior to the more demanding tests.

The nuclear test series includes low-power tests, full-power tests, and ECC margin tests. The low-power tests will provide means of fulfilling major portions of the LOFT program objectives without damage to the core from excessive temperatures. Test parameters will be selected to limit cladding temperatures for the low-power tests. The full-power tests will complete the assessment of analytical model capability for design conditions of maximum power density and ECC injection. The ECC margin tests will investigate reactor design criteria related to margins of safety inherent in the capability of ECCS.

Consideration has been given to the possibility of test results indicating a need to deviate from the basic test program. Such deviations will be based on at least the following considerations which will be applied to all tests prior to execution:

(1) Proceeding to the next planned test may result in unwarranted risk to the fuel and its reusability, thereby compromising the overall test program.

(2) The usefulness of results from a planned test is questioned based on previous test results, and another test appears more appropriate.

(3) A modification in the test conditions for the next planned test would be expected to optimize test results or produce more useful data.

(4) Objectives of a test series were not met, and additional tests are required.

(5) An alternate test series is found to be required before proceeding to the next planned test.

As implied by the above considerations, it is not possible to describe a complete experimental program for LOFT at this time, but it is expected that the program will evolve along the general course outlined above.

## 2.3 Administrative Safeguards

Administrative safeguards are to be employed and observed during the test program, and those specifically related to the experimental test program are discussed in Section 14.2.2. The logic for the administrative controls is as follows:

(1) The experimental test program is derived from the general provisions given in PRD-1.

(2) The special experimental needs required for analytical model verification are described in ERD-1.

(3) The measurements required to satisfy the requirements of ERD-1 are specified in MRD-1.

(4) The detailed requirements and predicted results for each test are documented in the Experiment Operating Specifications (EOS)[4].

(5) All four of the aforementioned documents (PRD-1, ERD-1, MRD-1, and EOS) receive AEC approval.

(6) The experiment operating procedure (EOP) for each experiment is prepared from the EOS.

(7) Each EOP is reviewed by ANC Safety Division and ANC Quality Division, and is reviewed and approved by ANC LOFT Program Division (LPD) branch managers.

(8) After this approval, the EOP for the nuclear tests is reviewed and approved by the Procedures Safety Review Board.

(9) This is followed by review and approval by the ANC LPD Manager and the AEC.

More details of the review and audit are given in Section 14.1.4, and the recordkeeping requirements are discussed in Section 14.1.6.

An experiment safety analysis will be prepared for each experiment to present an analysis of the safety considerations, including the significant system response. This report will be reviewed by all safety review groups and reviewed and approved by ANC LPD and the AEC.

## 2.4 Experimental Envelope

The LOFT experimental program will consist of several tests at various plant conditions. An envelope including these conditions is presented in Table 2-I, and this envelope will form an important part of the bases for the LOFT Technical Specifications. Although tests are not currently planned which will require all permissible combinations of these parameters, the LOFT facility does have the flexibility to test under these conditions if necessary. The table is limited to testing which corresponds to the four-inlet, four-outlet LPWR configurations.

## 2.5 Preexperiment Analysis and Requalification

### 2.5.1 Preexperiment Analysis

Extensive pretest planning and analysis will be undertaken for each LOCE. The EOS will define for each LOCE detailed test specifications such as initial plant conditions, pretest requirements, test-initiating conditions, test control, and data acquisition requirements. Pretest predictions will be prepared for each LOCE. The LOFT Experimental Test Predictions (ETP)[5] will present an analytical prediction of system response and detailed operating constraints required for achieving the program objectives. An experiment will not be conducted unless the predicted response is within the safety limits for performing LOCEs as specified in the other sections of the FSAR and the LOFT Technical Specifications.

TABLE 2-I

EXPERIMENTAL ENVELOPE LIMITS[a]

| Item | Parameter | Limit |
|---|---|---|
| 1. | Pressure (max) | 2400 psi |
| 2. | Vessel outlet coolant temperature (max) | 618°F |
| 3. | Core power (max) | 60 MW(t) |
| 4. | Linear heat rate (max) | 19 kW/ft |
| 5. | Break size (max) | 0.51 $ft^2$ |
| 6. | Break opening time (min) | 1 msec |
| 7. | Fission product inventory (max) | Equivalent of 2000 EFPH[b] |
| 8. | Break location (simulated) | Inlet, outlet, distributed[c] |

[a] The experimental envelope is further characterized by the following statement: No experiment will be conducted if preexperiment analysis shows that the maximum fission product release fractions (about 11% of the gaseous fission products) assumed for experiments in this SAR will be exceeded.

[b] Fuel may be operated intermittently for more than a total of 2000 EFPH, but the fission product inventory will not be allowed to exceed that resulting from 2000 EFPH of continuous operation.

[c] "Distributed" indicates breaks located between the steam generator and the primary coolant pumps.

Pre-LOCE preparation will include a prediction of maximum fuel clad temperatures and fuel damage potential during the experiment. As each LOCE is completed and the data are analyzed, the adequacy of the predictive code will be reassessed and code modifications incorporated where deemed necessary.

### 2.5.2 Preexperiment Requalification

The LOFT Integral Test System will be requalified after each LOCE. The scope and procedures for requalification are stated in the LOFT requalification manual[6].

## 2.6 References


1. Aerojet Nuclear Company, "LOFT Program Requirements Document", PRD-1D (May 1972).
2. Idem, "LOFT Measurement Requirements Document", MRD-1 (August 1972).
3. Idem, "LOFT Experimental Requirements Document", ERD-1 (to be published; draft submitted for AEC approval).
4. Idem, "Experiment Operating Specifications" (to be published; draft submitted for AEC approval).
5. Idem, "Experimental Test Predictions" (to be published).
6. Letter, H. L. Coplen, Aerojet Nuclear Company, to R. E. Swanson, USAEC Idaho Operations Office, "Submittal of ANC Approved Requalification Manual Volume I", HLC-1281-73 (December 14, 1973).

CONTENTS

3.0 SITE AND ENVIRONMENT . . . . . 3-1

3.1 Site Selection . . . . . 3-1

3.2 General Site Description . . . . . 3-1

3.3 Topography . . . . . 3-2

3.4 Hydrology . . . . . 3-2

3.4.1 Regional Hydrology . . . . . 3-2
3.4.2 Flooding . . . . . 3-4

3.5 Geology . . . . . 3-7

3.5.1 Regional Geology . . . . . 3-7
3.5.2 Engineering Geology at LOFT Site . . . . . 3-7

3.6 Seismology and Volcanism . . . . . 3-9

3.6.1 Seismology . . . . . 3-9
3.6.2 Volcanism . . . . . 3-11

3.7 Meteorology . . . . . 3-12

3.7.1 Temperatures and Precipitation . . . . . 3-12
3.7.2 Lapse and Inversion Conditions . . . . . 3-13
3.7.3 Winds . . . . . 3-13
3.7.4 Tornadoes . . . . . 3-15
3.7.5 Other Meteorological Considerations . . . . . 3-19
3.7.6 Onsite Meteorological Measurement Program . . . . . 3-19
3.7.7 Meteorological Diffusion Estimates . . . . . 3-20

3.7.7.1 Short-Term Diffusion Estimates . . . . . 3-22
3.7.7.2 Long-Term Diffusion Estimates . . . . . 3-23

3.8 Population Distribution and Land Usage . . . . . 3-24

3.8.1 Population Distribution . . . . . 3-24

3.8.1.1 Onsite . . . . . 3-24
3.8.1.2 Offsite . . . . . 3-25

3.8.2 Land Uses . . . . . 3-25

3.9 Radiological Surveillance (Environment Monitoring) . . . . . 3-27

3.10 References . . . . . 3-27

APPENDIX 3-A -- TECTONIC MODEL, SEISMICITY AND VOLCANISM FOR THE EASTERN IDAHO REGION . . . . . 3-59

APPENDIX 3-B -- DISCUSSION OF POTENTIAL FLOOD PROBLEMS IN CONJUNCTION WITH THE LOFT PROGRAM. . . . . 3-73

## FIGURES

3-1. National Reactor Testing Station. . . . . 3-31

3-2. Test Area North, NRTS. . . . . 3-32

3-3. Rivers and flood plains of NRTS . . . . . 3-33

3-4. NRTS and southeastern Idaho. . . . . 3-34

3-5. LOFT flood control plan . . . . . 3-35

3-6. TSF flood control plan . . . . . 3-36

3-7. Population distribution and wind frequencies about Test Area North. . . . . 3-37

3-8. TAN 20-ft-level lapse wind roses. . . . . 3-38

3-9. TAN 20-ft-level inversion wind roses . . . . . 3-39

3-10. TAN 20-ft-level wind roses. . . . . 3-40

3-11. TAN 150-ft-level lapse wind roses . . . . . 3-41

3-12. TAN 150-ft-level inversion wind roses . . . . . 3-42

3-13. TAN 150-ft-level wind roses . . . . . 3-43

3-14. Tornado frequency in northwest states . . . . . 3-44

3-15. Natural occurrence of Chi/Q at site boundary surrounding LOFT . . . . . 3-45

3-16. LOFT windspeed during all stability classifications. . . . . 3-46

3-17a. Annual average Chi/Q as a function of distance and sector . . . . . 3-47

3-17b. Annual average Chi/Q as a function of distance and sector. . . . . 3-48

3-17c. Annual average Chi/Q as a function of distance and sector . . . . . 3-49

3-17d. Annual average Chi/Q as a function of distance and sector . . . . . 3-50

3-18. Contours of annual average Chi/Q (0-5 miles) . . . . . 3-51

3-19. Contours of annual average Chi/Q (0-50 miles) . . . . . 3-52

3-20. Smoothed contours of annual average Chi/Q (0-5 miles) . . . . . 3-53

3-21. Smoothed contours of annual average Chi/Q (0-50 miles) . . . . . 3-54

3-22. NRTS vegetation . . . . . 3-55

3-23. NRTS open grazing by permit . . . . . 3-56

3-24. Irrigation in southeastern Idaho . . . . . 3-57

3-25. Atmospheric environmental monitoring . . . . . 3-58

3-26. Offsite environmental monitoring . . . . . 3-59

TABLES

I. Extreme Winds at 20-Ft Elevation at LOFT Site . . . . . 3-14

II. Summary of NRTS Tornado and Funnel Clouds . . . . . 3-17

III. DRL Stability Classes . . . . . 3-21

IV. Summary of Annual Averaged $\chi/Q$ Values . . . . . 3-24

V. Predicted NRTS Work Force Distribution During Testing . . . . . 3-25

VI. Offsite Population Distribution (1970) . . . . . 3-26

## 3.0 SITE AND ENVIRONMENT

### 3.1 Site Selection

The TAN facilities are located within the NRTS boundary, approximately 27 miles north-northeast of the Central Facilities Area (CFA) (see Figures 3-1 and 3-2). This area was selected as the area in which to locate the LOFT facility. The TAN area, originally built for the Aircraft Nuclear Propulsion (ANP) program, was constructed under the mobile reactor philosophy in order to study the reactor components following extended operation of direct-cycle nuclear engines. Consequently, remotely located test facilities (Field Engine Test [FET] and Initial Engineering Test [IET]) were built approximately 1-1/2 miles from the assembly and hot shop areas (TSF) and connected by heavy-duty four-rail trackage over which large, relatively unshielded reactor assemblies could be moved with ease. A manned shielded locomotive was designed and built to shuttle the highly radioactive mobile reactors between the TSF area and either of the test facilities.

The LOFT containment vessel is located at the FET facility, approximately 1 mile west-northwest of the TSF. The LOFT service and containment buildings adjoin the FET control and equipment building. In addition, the water supply, control room, and other support equipment built for FET are being utilized for LOFT.

The TAN facilities are ideally suited for the study of major reactor accidents. Use of the large machine shop, assembly space, and hot shop facilities for posttest disassembly and examination permits the use of one or more MTAs. Such a mobile experiment philosophy makes maximum use of existing facilities; it also permits more cost-effective use of expensive, containment-type, remotely operated test facilities such as those required for the LOFT program. Finally, these facilities could be used for other safety programs later on or concurrently with LOFT.

### 3.2 General Site Description

The NRTS was established in 1949 as a remote station for the USAEC activities in building, operating, and testing nuclear reactors. To date,

50 different reactors have been constructed at the station although many of these have completed their mission and are currently decommissioned.

The NRTS is located on an old naval gunnery range in southeastern Idaho on the Snake River Plain at the southern foot of the Lemhi, Lost River, and Beaverhead mountain ranges. The station is known for its remoteness, being 30 miles from the nearest community of size (Idaho Falls, but see also Table 3-VI and Section 3.8). The 894-sq-mi area comprising the station is irregular in shape, with the widest dimensions forming a rectangle measuring 39 miles north to south and 36 miles east to west. Northwest of the station and across the plain to the southeast, long, deep valleys, oriented northwest-southeast, drain onto the plain. Drainage from the north is from the virtually unbroken barrier of the Beaverhead-Centennial ranges, part of the Continental Divide.

## 3.3 Topography[1]

The Snake River Plain in southeastern Idaho generally slopes downriver from the highlands near Ashton to Bliss, about 200 miles to the southwest. The Snake River flows along the eastern and southern margin of the plain, and is separated from the Wood River and the ancient Lake Terreton Basin, on the north side of the plain, by a broad central ridge which generally follows the axis of the plain.

The NRTS lies on the north side of the central ridge and is almost entirely within a basin (named "Pioneer Basin" by Nace[1]). The topography of the basin is generally flat, with an average elevation slightly under 5,000 ft. Most of the land slopes gently downward from the southern and eastern station boundaries toward TAN. The river channels and flood plains of the NRTS are shown in Figure 3-3. Along the northern and western boundaries, three mountain chains rise to elevations in excess of 10,000 ft (see Figure 3-4).

## 3.4 Hydrology

### 3.4.1 Regional Hydrology

Streams do not completely cross the Snake River Plain, on which the NRTS is located, because of the high permeability of the rocks, which causes the water to seep into the ground.

However, the largest stream, the Big Lost River, enters the NRTS near the southern end from the west and during wet periods flows in a large arc north to the foot of the Lemhi Mountain Range (8 miles southwest of LOFT), where it forms two small lakes. The only other naturally occurring stream bed onsite is Birch Creek, which enters from the north. This stream bed is usually dry, because the stream has been diverted for irrigating purposes. The only time water is in this stream bed is during heavy spring runoff, when it usually comes no closer than about 2 miles north of LOFT.

The areas between the terminus of these two streams constitute a large playa, which is called the Birch Creek Playa and is at an elevation of about 4778 ft (NRTS datum). This playa surrounding the TAN area was the site of a lake in the 1800s and is a remnant of ancient Lake Terreton. However, since the late 1800s when the Birch Creek and the Big Lost River were diverted for irrigation systems, the lake bed has remained dry, and flow of these streams into the NTRS is very infrequent. These same irrigation systems divert some of the flow from river courses during a period of flooding. The major portion of any water entering the NRTS during these periods results from local snowmelt.

The NRTS overlies a large natural underground reservoir of water having an estimated lateral flow of about 1 billion gal/day. The main sources of water for this reservoir are the streams that originate in the mountains surrounding the plain and disappear into the porous soils. The principal sources of ground water recharge are the Birch Creek Valley to the north and the Mud Lake area to the east. These sources of water include the North Fork of the Snake River, Big Lost River, Little Lost River, Birch Creek, and the Mud Lake Basin. Local recharge by direct percolation of precipitation is negligible. Ground water from these sources seeps through the voids and cracks in and between layers of underground basalt and sedimentary material.

The regional ground water system, known as the Snake River Plain Aquifer, contains an estimated 250 million acre-ft of

water. The water table lies about 200 ft below the ground surface in the LOFT facility area. The ground water in this area contains about 200 ppm of dissolved solids; calcium and magnesium bicarbonate are the predominant solutes. The average water temperature ranges from 50 to 60°F. The water table slopes to the southwest with a gradient which averages about 5 ft per mile over the entire NRTS. The water table in the TAN area is very flat and at places may slope less than 1 ft per mile. The direction of ground water flow is from recharge areas to the north and east toward the main Snake River Plain to the south. Studies to determine the ground water velocity in the south central part of the NRTS indicate that the water flows at the rate of 6 to 10 ft per day. The velocity of water in the aquifer beneath the LOFT site is expected to be on the order of 10 ft per day.

### 3.4.2 Flooding

A study examining the flooding potential in the LOFT and TSF areas has been conducted. The results of this study are given in Appendix 3-B. A summary of the results indicates that flooding of the TAN area infrequently occurs from high spring runoff, primarily from the nearby Birch Creek alluvial fan. As discussed in Appendix 3-B, the unique features of the area limit the production of flood waters during periods with frozen ground conditions to the nearby local slopes. The snowmelt in the mountainous region occurs after the lower plains are free of snow and the alluvium is unfrozen. This results in the infiltration of the snowmelt from the mountains into the permeable alluvium prior to reaching the LOFT area.

The flood potential of the local snowmelt was brought into focus in April 1969 when Birch Creek reached the LOFT area, and the Big Lost River also filled two of its playas with water overflowing into the normally dry outlet channel which flows toward LOFT. In addition, a third stream, the Little Lost River, had started to fill the playa located near Howe, just outside the NRTS, and was spreading toward the Big Lost River channel. The principal source of the water in these stream beds was from

local snowmelt, and the flooding at LOFT was primarily from snowmelt on the alluvial fan at the mouth of Birch Creek. Four weather phenomena were required to produce the spring 1969 runoff conditions; viz, (a) heavy fall rains saturating the earth to an above-normal depth, (b) hard freezes extending the frost-line to unusual depths, (c) a late spring followed by an abnormally long period of unusually high daily spring temperatures, and (d) heavy snow accumulation on the frozen ground. The probability of all four occurrences in a given year has characteristically been very small.

This type of flood, along with other potential flooding mechanisms, have been taken into consideration in the flood control measures initiated to prevent a flood threat at the LOFT area. The following flood control measures for each of the major water sources are in effect or have been initiated.

A diversion dam has been constructed for the Big Lost River at the southern end of the NRTS. The present diversion facility is adequate for a 55-year flood. However, the diversion dam is scheduled to be upgraded to divert a 300-year flood in FY 1975. These diversion provisions on the Big Lost River minimize the flood potential from this water source.

A study of the flooding records for the Little Lost River Basin, as shown in Appendix 3-B, indicates that the Little Lost River Basin has a 100-year flood flow of 550 $ft^3$/sec near Howe. Based on observed infiltration rates in the area, it has been calculated that this flooding rate would only require about 2-1/2 $mi^2$ to dissipate. Thus, the Little Lost River is not likely to reach the Big Lost channel, much less the LOFT area.

The flood at the LOFT area in 1969 originated primarily from the slopes near the Birch Creek playa. Thus as a result of this flood and previous smaller floods, local flood control measures were initiated at LOFT and TSF. These flood control measures consist of low-level dikes, drainage or diversion ditches, emergency injection wells, and settling basins.

The flood control dikes, about 4 ft high, protect the TAN assembly, maintenance, and LOFT test area (see Figures 3-5 and 3-6). Two road entrances to the LOFT area are not diked and would have to be diked or sandbagged to secure the area in the event of a potential flood. It has been estimated that 25 $yd^3$ of fill material would be required to secure the entrances. An existing stockpile of fill material is available for this use, and equipment for handling the fill material is available from an existing equipment pool. Securing the roads with this equipment or by sandbagging is estimated to take less than an 8-hr shift. Since the emergency flood action would be initiated many hours before the flood waters reached the road flood level, the time required to secure the road is not a problem.

As is shown in Appendix 3-B, this dike system is capable of storing about 13,000 acre-ft of water. This is more than 3 times the 1969 flood ($\sim 3.8 \times 10^3$ acre-ft).

The ditches channel the water into the permeable areas and into the existing gravel pit located about 1 mile north of LOFT (see Figures 3-5 and 3-6). While no detailed studies have been made to determine the maximum rate or volume of water which the gravel pit will accept, it is more than adequate for the maximum flood conditions that have been experienced in the past 50 years.

The settling basins and the injection wells were located between the four-rail track and the highway where water cannot normally run off. These facilities were provided to prevent water from standing near the railroad track roadbed. The settling basins were designed to handle a normal year's runoff by disposing of the water by infiltration/evaporation. The emergency injection well inlets are located high enough to ensure that the basins are full before accepting any water. The disposal capability of the wells is 25 acre-ft per day.

A conservative estimate of the 100-year LOFT area flood (Appendix 3-B) indicates that the flood would be $\sim 1.4$ times the 1969

flood. Based on this design estimate, the flood control provisions are adequate to handle more than twice the 100-year flood.

## 3.5 Geology

### 3.5.1 Regional Geology[2]

The Snake River Plain is young, and the mountains surrounding it are relatively young, being late Tertiary. The "rocks" in the mountains are very old, being early to mid-Paleozoic. As structural entities, however, the mountains are young.

The NRTS is located in a faulted and downwarped basin located at the central northern part of the semiarid upper Snake River Plain in southeastern Idaho. This plain extends in a great arc about 200 miles across southeastern Idaho from Bliss, southwest of Boise, to near Ashton in eastern Idaho. The surface of much of the plain is covered by waterborne and windborne topsoil. Underlying the plain are composite layers of interbedded volcanic and sedimentary rocks, principally basaltic lava flow, and this includes interflow beds of sedimentary materials. These layers partly fill a basin of older limestone and volcanic rocks. The older rocks, which are not waterbearing, are exposed in the mountains northwest and southeast of the plain and presumably underlie all of the plain at depths that may be as great as 5000 ft.

The overlying deposits of sedimentary material are as much as 60 ft deep in the LOFT area. These deposits include alluvium, alluvial fan deposits, lakebed and playa deposits, and windblown soil.

### 3.5.2 Engineering Geology at LOFT Site

The surface soils and bedrock near LOFT have been extensively studied during:

(1) A foundation investigation and subsequent deep rock excavation for the footings of the concrete hangar just west of the LOFT structure[3]

(2) More than 100 core borings near the LOFT containment structure made during the LCRE program[4]

(3) Three deep wells in the immediate area and several other wells within 1 or 2 miles of LOFT[5]

(4) Foundation borings made at each major bearing point during the foundation investigation for LOFT[6] and subsequent pier hole inspection during LOFT construction.

The soil and rock conditions -- summarized from available reports, field inspection, and examination of rock core and boring samples -- indicate that the upper 50 to 60 ft of soil is lake or playa sediment. The rock is covered with about 1 ft of sand and basalt fragments. Several tens of feet of varved lake sediments (alternating layers of silt and clay) cover this lower sand. The lake sediment grades upward into sand, silty clay which was deposited in intermittent playa lakes. In places, the playa sediment is covered with a thin layer of aeolian sand or loess. The soils contain up to 25% natural lime; this stabilizes the clays to give the soils good bearing properties and relatively high seismic velocities.

Foundation borings, excavations, and well logs indicate the bedrock is basaltic lava; the explored section (several hundred feet) consists of individual flows 10 to 50 ft thick. The upper flow is further subdivided into flow units[7,8] that vary from 1 to 10 ft in thickness.

Most of the flow units are pahoehoe basalt, but the composition varies toward Aa basalt[9]. A small percentage of the flow units have a clinkery skin of Aa or contain pockets of flow breccia. The ultimate compressive strength of the basalt ranges from as low as 2,500 psi in the clinker pockets to over 10,000 psi in the dense pahoehoe flow units. It is estimated that over 90% of the rock would have compressive strengths of more than 7,000 psi. The pahoehoe lavas were quite viscous when emplaced; therefore, the flow units conform quite closely to one another and overlap to bridge over the scattered pockets of clinker or breccia. The flow units are keyed into one another owing to the natural processes of flow emplacement. Most of the pahoehoe flow units

contained enough heat so that the glassy skins are "welded" together[10].

During the construction phase of LOFT, all the major loads were carried to rock by piers drilled several feet into rock. The pier holes were drilled into rock with a cable tool drill using a large (2000 lb) star bit on a short sinker bar. This resulted in a hole large enough to admit an inspector. Each hole was inspected for rock characteristics to assure that it was completed in competent solid basalt. The concrete piers were cast in place against the basalt walls of the hole. Thus, the piers have both end bearing and side bearing from the concrete-basalt bond.

## 3.6 Seismology and Volcanism

### 3.6.1 Seismology

No severely destructive earthquakes have affected the eastern Snake River Plain since towns were established in the early 1860 decade[11]. Of the recorded earthquakes that have been felt, none have been of sufficient intensity to cause more than minor damage to buildings in Idaho.

The Hebgen Lake earthquake of August 1959 focused attention on the seismic potential of the intermountain region. The annual number of recorded, instrumentally detectable seismic events increased in the 1960 decade when the Vela Uniform system was put into operation. The increase in recorded activity was apparently due to better instrumentation and had little to do with any basic change in regional tectonism.

The Hebgen earthquake and the operation of the Vela Uniform network may explain why the Uniform Building Code (UBC)[12] was revised in 1970. This changed parts of Idaho, Montana, and Utah from Seismic Risk Zone 2 to Zone 3[13]. Since 1970 several studies have been published which, together with other information, give more insight into the tectonic patterns, seismic activity, and seismic risks in the region. This material is treated in more detail in Appendix 3-A; the pertinent points will be summarized in the following paragraphs.

The Intermountain Seismic Zone[14] near Yellowstone National Park is the most active area in the region. A second area, which is less active, is located about 100 miles north and west of the NRTS in east central Idaho; it may be a separate tectonic element or it may be a branch of the Intermountain Seismic Zone. These two seismic zones are characterized as being in tectonically active basin and range-type mountains, show evidence of geologically recent faulting, and are the location of seismic activity from the lowest detectable limit up through potentially destructive events. The magnitude and incidence of seismic events falls off from these known centers toward the Snake River Plain.

The Snake River Plain is characterized by the absence of seismic events (including microseisms) or known faults, younger than the mid-to-lower Pleistocene basalts. Thus the Snake River Plain itself can be considered to be presently aseismic. One would not expect faults or earthquakes to occur on the plain. The probability of faulting and the magnitude of possible seismic events increases from the mountains adjacent to the plain toward the active seismic zones described above.

Two geologically recent scarps were described within 35 miles of LOFT by Bonilla and Chase[15]. Investigations by Malde indicated that there had been movement on the faults under the scarps within the last 4,000 to 30,000 years. Microseismic studies in the late 1960 decade[16] and current microseismic monitoring[17] indicate these two faults are presently dormant; however, owing to the geologically recent movement, they must be defined as active faults for safety review and analysis purposes. Any potential threat from these faults should be indicated years or months in advance by a return of microseism activity.

Since the faults are active by definition, they are used as the locus of earthquakes in seismic design analyses made since 1970. Realistically, any potentially damaging earthquakes would occur farther away and would result in lower design accelerations at LOFT.

As mentioned previously, southern Idaho and the NRTS region was classified as Seismic Zone 3 by the UBC[18] in 1970. Thus, prior to 1970, structures and equipment for the LOFT facility were designed using the requirements for Zone 2 (see Section 6.1.3). The MTA was designed, using a dynamic analysis rather than the UBC static equivalent, to withstand appropriate seismic disturbances. The dynamic analysis indicates that the plant can be brought to a safe shutdown condition through a safe shutdown earthquake (SSE) (see Section 5.1.2). A dynamic analysis of the structure supports of the containment vessel and Building TAN-650 was made to determine the possible relative displacements between the structures. This analysis verified the adequacy of the design of the interconnecting equipment between the two structures. The PPS protective channels are designed to perform their function when subjected to the most adverse seismic conditions in accordance with IEEE 344 (see Sections 7.2.2.5 and 9.2). Thus, the above-mentioned structures, systems, and components which are important to safety have been designed to withstand the seismic loadings without the loss of the capability to perform their safety functions. This satisfies the seismic design requirements of Criterion 2 in Appendix 1-A.

### 3.6.2 Volcanism

The Snake River Plain started to form in mid-Tertiary time. The Pleistocene age (the last million or so years) has been marked by sporadic outbursts of lavas[19] which have led to the accumulation of several thousand feet of basalt on the NRTS[20]. The size and pattern of flows, when considered in space and time, indicate the individual flows are small when compared with the entire plain and are separated in time by hundreds or thousands of years. Thus the recurrence of volcanism in the lifetime of any facility or program now operating on the NRTS would not be expected. This assumption is supported by current tectonic patterns (see Appendix 3-A).

Recent work by the U. S. Geological Survey (USGS) indicates that volcanic events are preceded by detectable seismic warnings; seismic instruments now in operation on and near the NRTS

are capable of detecting the activity which would foretell a return of volcanism to the Snake River Plain. Years or months of warning can reasonably be expected before a volcanic eruption. Past volcanic patterns indicate that a future eruption, if any, would most likely occur near the center of the plain tens of miles from LOFT (see Appendix 3-A).

Thus it can be concluded that LOFT will not be seriously affected by volcanism due to the infrequent recurrence of volcanic events (centuries to milleniums) and the predicted location where volcanism would occur. In the unlikely event that volcanism were to occur near the LOFT site, the existing instrumentation would predict in advance (months to years) that volcanism was imminent. This would allow sufficient time to assess the problem and initiate corrective action to secure the site.

## 3.7 Meteorology[21]

In 1949 the U. S. Weather Bureau established a station, now operated by the National Oceanic and Atmospheric Administration (NOAA), at the NRTS to provide meteorological support for the AEC's operations and to conduct meteorological research. Climatological data for the station have been recorded continuously since that time and have been summarized in detail in a series of reports (References 21 through 24). Numerous field tests have been conducted at the station to study transport, diffusion, and deposition of airborne materials. The results of these experiments have been reported in scientific journals, and many are summarized in the report by Yanskey et al[21]. Based on these reports, a brief summary of the climatic and atmospheric diffusion information is presented in the following paragraphs.

### 3.7.1 Temperatures and Precipitation

The climate of the NRTS can be described as desert steppe, with the average maximum temperature ranging from 28°F in mid-January to 89°F in mid-July. Corresponding average minimums are 3 and 51°F. Extreme temperatures of -43 and 103°F have been observed during the period since December 1949. The average annual precipitation is 8.5 in. with a low of 4.5 in. in

1966 and a high of 14.4 in. in 1963. The maximum average monthly precipitation occurs in June (1.5 in.) and the minimum in July (0.3 in.). The average annual snowfall is 28.6 in. Annual snowfall ranged from a low of 11.6 in. in 1963-1964 to a high of 45.0 in. in 1964-1965. The greatest snow depth observed was 23 in. in March 1952. Two to four 2-week-or-longer droughts occur during the July-November period, with a record drought of 73 days in 1959. A recent evaluation of the rate of precipitation falling on undisturbed land at the NRTS indicates that more than 95% of this water is evaporated or transpired by plants and less than 5% remains in the soil[25].

### 3.7.2 Lapse and Inversion Conditions

Normal weather conditions at the NRTS develop lapse conditions during daylight hours with inversion conditions forming around sunset and continuing until after sunrise. During the day, especially on clear summer days, thermal convection and the accompanying turbulence mix the surface layers of air with those above so as to bring both to a nearly common speed. If the surface winds maintain a speed greater than 15 mph through the night, they will frequently prevent the formation of an inversion.

Inversions may be expected on 96.2% of the nights, and an inversion of at least 10 hr duration may be expected on more than 61% of the nights of the year. Inversion conditions occurring during the winter months have a 50% probability of lasting for at least 15 hr; however, the probability drops rapidly to 6% for 20 hr or longer. Surface temperature lapse rates of more than 1.5°F in 200 ft are observed nearly every afternoon from March through mid-November and on more than half of the midwinter afternoons.

### 3.7.3 Winds

The NRTS is in the belt of prevailing westerly winds which are channeled upon entering the valley. A southwest wind predominates at the south end of the site whereas south-southwest winds

occur most frequently at the north end (see Figure 3-7). The strongest channeled winds at the north end of the site generally come from the northwest out of the Birch Creek Valley. On occasion these winds have been observed for more than 60 consecutive hours.

The winds at the NRTS show a seasonal variation with the principal contrast being between winter and summer (see Figures 3-8 through 3-13). Particularly noticeable in the winter is the absence of the southwest wind at the north end of the site in the vicinity of TAN. The prevailing wind during this time is from the northeast.

The average annual windspeed in the LOFT facility area is 7.1 mph. The greatest average hourly windspeed observed was 51 mph from the southwest, and average hourly windspeeds of 35 mph or greater have been recorded during every month of the year. Hourly averaged windspeeds of 25 mph or greater occur on an average of 66 days per year; hourly averaged windspeeds of 40 mph or greater occur on an average of only 3.5 days per year. Calm conditions occur 11% of the time, ranging from 2% of summer afternoons to nearly 25% of the time during winter nights. An annual average wind frequency distribution for the LOFT facility is shown in Figure 3-7.

The extreme winds measured at the LOFT site have been analyzed for the 20-ft elevation to determine the probable wind return frequency[6]. The results of the analysis for the extreme winds with a 100-year return frequency are shown in Table 3-I.

TABLE 3-I

EXTREME WINDS AT 20-FT ELEVATION AT LOFT SITE

| Item | Type | Recorded Values (mph) | Calculated 100-Year Return Frequency Values (mph) |
|---|---|---|---|
| 1. | Peak hourly average | 51 | 64 |
| 2. | Peak gusts | 67 | 83 |

### 3.7.4 Tornadoes

This section investigates the probability of occurrence of a tornado at the NRTS, and in particular, the effects of such a phenomenon upon LOFT. It should be noted that any rotating column of air is not necessarily classified as a tornado. A tornado is defined[26] as a violently rotating column of air, pendant from a cumulonimbus cloud, which is nearly always observable as a funnel cloud or tuba. On a local scale, it is the most destructive of all atmospheric phenomena. Its vortex, commonly several hundred yards in diameter, whirls -- usually cyclonically -- with winds estimated at 100 to more than 300 mph. When a tornado vortex cloud reaches the surface over land, it is classified as a tornado. If the vortex does not reach the ground, it is classified only as a funnel cloud.

Most of the tornado activity in the United States occurs east of the Rocky Mountains[27]. R. C. Miller[28] states that severe storms, of the type that occur in the southern Great Plains (known as "Tornado Alley") require that very specific atmospheric conditions be present simultaneously in time and space. The "fuel" for this type of storm is very warm, moist, buoyant air in the lower 5000 ft of the atmosphere. Additional requirements are the availability of a very dry continental air mass upwind, a low-level jet in the moist air, a strong band of winds near the area at or near 20,000 ft, strong vertical shear, significant cooling aloft, and explosive instability. These conditions have never been observed to coexist in the Pacific Northwest.

Fujita has completed research[29] on the estimation of tornado probability in Idaho, Washington, and Oregon. Shown in Figure 3-14 is a compilation of statistics of tornado sightings in the three northwestern states, as compiled by Fujita. Although some of the "one-degree-squares" in Figure 3-14 are open, this does not imply that the occurrence of a tornado in these areas is impossible.

Owing to the short time period of data collection and the sparse population density in some areas, all tornadoes may not have

been reported, and the statistics may not yet be indicative of true probabilities.

In Idaho tornadoes have been reported only during the warm season, April through August[26]. In the 54-year period from 1916 through 1969, 32 tornadoes were reported in Idaho, while 15 have been reported in the 10-year period from 1960 through 1969. Improved communications and increased population are the probable reasons for the increased reporting frequency in the 1960s.

On the local scale, the Environmental Research Laboratories at the NRTS have summarized the tornado and funnel cloud activity that has been reported at the NRTS from 1950 through 1972. They have divided the reported cyclonic storms at the NRTS into three classes; viz, (a) confirmed tornadoes, (b) confirmed funnel clouds, and (c) unconfirmed tornadoes or funnel clouds. Table 3-II presents their data.

The probability of occurrence of a tornado at any given location at the NRTS can be described by the method of H. C. S. Thom[30].

$$P = \frac{a\bar{n}}{S}$$

where

$P$ = probability, per year, of a point within Area S being hit by a tornado

$a$ = average area of tornado

$\bar{n}$ = number of tornadoes expected in Area S per year

$S$ = area over which $\bar{n}$ is considered.

The average area of a tornado was estimated by averaging the estimated areas of the 26 tornadoes observed in the eastern Snake River Plain, as reported by Fujita[31]. By this method, an average effective size of 0.0055 $mi^2$ was estimated for tornadoes in this area. Since the entire area of the NRTS is not under continuous observation, tornadoes may have occurred which were not reported. To account for these undetected events, it was assumed that all of the funnel clouds that have been reported at the NRTS were tornadoes, which represents five tornadoes in

TABLE 3-II

SUMMARY OF NRTS TORNADO AND FUNNEL CLOUDS

| Item | Description | No. of Cases | Comments |
|---|---|---|---|
| 1. | Confirmed tornadoes | 0 | There have been tornado reports from outside NRTS boundaries in Bingham, Butte, and Jefferson Counties. Two were sighted and well documented by NRTS employees.<br><br>a. June 6, 1967 - Tornado 15 miles east of EBR-II, approximately 4 miles north of milepost 314 on U.S. Highway 20. Time was about 1300 hours (MST). A photograph is on record.<br><br>b. July 27, 1972 - Tornado approximately 8 miles south of milepost 301 on U.S. Highway 20. Time was about 1430 hours (MST). A photograph of a second funnel that remained aloft was obtained. |
| 2. | Confirmed funnel clouds | 3 | a. April 28, 1954, at 1220 hours (MST) and June 9, 1954, at 1310-1317 hours (MST) 15 miles NE of CFA. Both of these funnels are included in the 32 reported by the State Climatologist's report.<br><br>b. July 20, 1972, 1325-1335 hours (MST), funnel aloft sighted by AEC Security and NOAA personnel about 10 miles southeast of CFA. |
| 3. | Unconfirmed reports | 3 | Each of these was apparently only a funnel cloud. These occurrences are unconfirmed as to dates, though two of them were sighted in May 1968 about 1/2 mile east of NRF. The third (date unavailable) was reported in the NRTS Climatography (IDO-12048). |

21 years of observation. The total area of the NRTS is approximately 900 $mi^2$. On this basis the annual probability of a point within the NRTS being hit by a tornado is:

$$P = \frac{(0.0055\ mi^2/tornado)\ (5\ tornadoes/21\ years)}{900\ mi^2}$$

$$P = 1.4 \times 10^{-6} yr^{-1}$$

This compares with the probability of a tornado striking a given point in the total Pacific Northwest (Oregon, Washington, and Idaho) of $2 \times 10^{-6} yr^{-1}$, as estimated by Dotson[28].

Dotson has reviewed the atmospheric aspects of tornadoes and has concluded that a storm of midwestern United States severity would not be consistent with meteorological conditions in the Pacific Northwest region. Dotson expects a tornado in this region to have a maximum rotational windspeed of only 100 to 120 mph. Fujita estimated that tornadoes outside the Midwest would have 125-mph probable, and 175-mph maximum windspeeds, including both the rotational and translational speeds[29]. On the basis of these studies, a rotational windspeed of 150 mph, plus a translational speed of 25 mph, for a total of 175 mph, is considered a conservative assessment of potential tornado windspeed for the NRTS area. This estimated 175-mph maximum potential windspeed value for this area was confirmed with Dr. Edwin Kessler of the National Severe Storms Laboratory in Norman, Oklahoma[32].

The pressure drop between the center of a tornado and the surrounding atmosphere is proportional to the square of the rotational wind velocity[28]. A typical pressure drop, associated with an assumed 300-mph tornado, is 3 psi. The corresponding value for a 150-mph tornado is 0.75 psig.

The wind loading assumed for the design analysis of the LOFT containment vessel is similar to that which would occur if tornado winds of about 160 mph were to impinge on the vessel. For this loading, the maximum stress intensity in the vessel is 200 psi, whereas the allowable stress intensity is 17,500 psi. This, coupled with the annual probability of $1.4 \times 10^{-6} yr^{-1}$ for LOFT being hit by a tornado, indicates the adequacy of the LOFT design. This also indicates that the intent of Criterion 2 (see Appendix 1-A) is satisfied.

### 3.7.5 Other Meteorological Considerations

Severe thunderstorms with wind gusts over 50 mph or hail of 1/2-in.-or-greater diameter do occur, but the frequency of occurrence is less than once per year.

As indicated previously, more detailed data on precipitation, winds, atmospheric diffusion parameters, and calculational techniques have been detailed in a series of reports which are summarized in Reference 21.

### 3.7.6 Onsite Meteorological Measurement Program[33]

The LOFT Meteorological Measurement Program to obtain onsite meteorological information is described in this subsection. These measurements are used to estimate the potential radiation exposures during routine and accidental release of radioactive material to the outside atmosphere.

Meteorological wind direction, velocity, and temperature sensors will be installed at 10- and 46-meter levels on the 150-ft LOFT tower. Their analog signal outputs will be transmitted by land line to an area near the LOFT reactor control room, where they will terminate into appropriate electronic translators and strip chart readout recorders. Each meteorological variable signal will also be multiplexed and retransmitted by land line to the NOAA instrument room in Building CF-690, where the information will again be presented on strip chart recorders.

Specifications for the direction and velocity measuring instrumentation will be equivalent to that of the Climet Model CL-26 system, as follows:

(1) Windspeed transmitter:
   (a) Starting speed: <1.0 mph
   (b) Range: 0-100 mph
   (c) Accuracy: ±2% or 0.25 mph whichever is greater

(2) Wind direction transmitter:
   (a) Threshold: <1 mph

(b) Wind direction accuracy: ±5%

(c) Mechanical range: 0 to 360° continuous rotation.

Dewpoint temperature will not be taken at this site because of the low potential for fogging or icing due to an increase in atmospheric moisture content by plant operations. This facility is located in a steppe-desert climate.

Ambient air temperature measurements will be made by aspirated nickel resistance thermometer Type "A" bulbs as sensors on the tower and chart recorders as readout devices near the reactor control room. A temperature strip chart readout recorder will also be located in the CFA NOAA instrument room.

System accuracies are within the following limits: (a) wind direction: ±5° for instantaneous recorded values, (b) wind velocity: ±0.5 mph for hourly averaged values, (c) temperature: ±0.5°C for time averaged values, and (d) temperature difference accuracy: ±0.1°C.

Meteorological instruments are inspected weekly to assure complete operation and minimize extended periods of instrument outage. The instruments are maintained by the NOAA, the same as other meteorological instrumentation at the NRTS. All calibrations are done semiannually or more frequently to assure 90% data recovery.

A backup meteorological system for the LOFT reactor is located east-northeast of the LOFT facility at a 150-ft tower. This tower facility, called "Test Area North (IET)", has been in continuous operation as a climatological and research area since 1956. The information is telemetered back to the NOAA meteorological center in Building CF-690. The NOAA personnel do all data reduction and compilation for meteorological data at the NRTS. All data are in compliance with the AEC-DRS Safety Guide 23[34].

### 3.7.7 Meteorological Diffusion Estimates[33]

The joint frequency distribution of stability, windspeed, and directional class for the LOFT area were obtained from the

nearby IET facility wind tower. The meteorological data were compiled for the years of record using the IET 20-ft elevation wind instrumentation and the 46.7-1.52 meters temperature difference sensors. In reviewing the compiled data, it was decided to use the joint frequency data for the years 1961 and 1964 because of the completeness of the data for these years of record.

The lower temperature sensor should be at an elevation of 10 meters. Since the one used was at 1.52 meters, the customary AEC-DRL correction factor was applied to the temperature gradients. The stability classes which were determined on the basis of the DRL adjusted temperature gradients are listed in Table 3-III.

TABLE 3-III

DRL STABILITY CLASSES

| Item | Classification | Pasquill Categories | Temperature Gradient (°C/100 m) |
|---|---|---|---|
| 1. | Extremely unstable | A | <-1.9 |
| 2. | Moderately unstable | B | -1.9 to -1.7 |
| 3. | Slightly unstable | C | -1.7 to -1.5 |
| 4. | Neutral | D | -1.5 to -0.5 |
| 5. | Slightly stable | E | -0.5 to 1.5 |
| 6. | Moderately stable | F | 1.5 to 4.0 |
| 7. | Extremely stable | G | >4.0 |

Wind directions were divided into sixteen 22-1/2° sectors and seven windspeed classes. No adjustment was made to the windspeeds to compensate for the fact that the winds were measured at 20 ft instead of 10 meters. This implies that the winds used in calculating $\chi/Q$ values will be slightly conservative.

Two different cases were considered for calculating the atmospheric diffusion estimates ($\chi/Q$) for LOFT. These cases consisted of short-term diffusion estimates and long-term diffusion estimates. All of the diffusion estimates are based on ground level releases.

3.7.7.1 Short-Term Diffusion Estimates

For the short-term case, values of $\chi/Q$ are computed for each combination of windspeed, wind direction, and stability categories. The values are ordered from the least to the greatest, and the cumulative frequency with which a value of $\chi/Q$ is reached or exceeded is determined from the joint frequency distribution of winds and stabilities. A curve is fit to the data calculated during stable conditions so that one can see the value of $\chi/Q$ exceeded with any given frequency. It should be noted that the curve fits the data points somewhat conservatively.

The computed values of $\chi/Q$ for the short-term cases are shown in Figure 3-15. This figure shows the cumulative frequency of hourly averaged $\chi/Q$ values that would exist at the NRTS site boundaries surrounding LOFT. The minimum distances to the site boundaries for each of the 16 sectors were employed in this calculation. The data presented in Figure 3-15 are used as a guide for comparing the amount of diffusion that can naturally occur at the LOFT site boundary with that which is used in the radiological analysis of accidents.

A plot of the maximum windspeed from each windspeed category and the percentage of time that the value is not exceeded is shown in Figure 3-16. This plot of windspeed is not segregated by stability classifications and is presented to illustrate the normal spectra of windspeeds that occur.

The short-term diffusion estimates are used primarily for assessment of the radiological consequences associated with accident situations. The relative axial concentrations used in the accidents analyzed in Sections 13.0 and 15.0 are based on standardized meteorological assumptions

specified for the NRTS[35]. These standardized meteorological assumptions are based on NOAA's "in-depth" review of the diffusion studies conducted at the NRTS and an analysis of the atmospheric diffusion equation parameters. An exception to this general rule of using the standardized NRTS meteorological assumptions was made for the analysis of the maximum hypothetical accident (MHA) (see Section 15.4). The MHA calculations employ the meteorological assumptions specified for this analysis by AEC-DRS Safety Guide 4[36].

A comparison of the relative concentrations using the standardized NRTS meteorological conditions and the data presented in Figure 3-15 has been made. Using the standardized meteorological conditions of 2m/sec and Class F stability, the calculated relative concentration is about $10^{-5}$ sec/m$^3$ for the site boundary at $10^4$m. Comparing this relative concentration with the cumulative frequency of the relative concentration, based on measured meteorological conditions, indicates that meteorological conditions resulting in greater diffusion and lower calculated exposures would occur >92% of the time. Thus, the standardized meteorological conditions result in maximizing the predicted radiological exposures for the accidents analyzed.

3.7.7.2 Long-Term Diffusion Estimates

The long-term case, by employing the annual average joint frequency of winds and stabilities annual average values of $\chi/Q$, are calculated by summing up the contributions from all combinations of wind and stability categories. Calculations are made at the site boundary in each sector and also at a number of radii out to 50 miles surrounding the site. Average values are also determined for defined area segments within the 50-mile radius.

The annual average $\chi/Q$ values for each directional sector were calculated for 11 distances out to 50 miles from LOFT. The distances used in the calculations

include 0.5, 1, 2, 3, 4, 5, 10, 20, 30, 40, and 50 miles. The results of the calculations are shown in Figures 3-17a to 3-17d, which plot the calculated $\chi/Q$ as a function of distance for each sector. The isopleth plots of annual averaged $\chi/Q$ values with LOFT as the source point are shown in Figures 3-18 through 3-21. The last two plots are smoothed by averaging the value in a particular sector with that of its neighboring sectors.

The annual averaged $\chi/Q$ values have been calculated using the data for all sectors. The averaged values are shown in Table 3-IV as a function of distance from the site.

TABLE 3-IV

SUMMARY OF ANNUAL AVERAGED $\chi/Q$ VALUES

| Item | Segment Boundaries (mi) | Average $\chi/Q$ ($sec/m^3$) |
|---|---|---|
| 1. | 5 - 10 | $9.52 \times 10^{-8}$ |
| 2. | 10 - 20 | $3.74 \times 10^{-8}$ |
| 3. | 20 - 30 | $1.95 \times 10^{-8}$ |
| 4. | 30 - 40 | $1.27 \times 10^{-8}$ |
| 5. | 40 - 50 | $9.28 \times 10^{-9}$ |

## 3.8 Population Distribution and Land Usage

### 3.8.1 Population Distribution

#### 3.8.1.1 Onsite

The working force at each of the NRTS facilities as shown in Table 3-V is variable, depending on the construction work in progress. The closest major facility to TAN is the Naval Reactors Facility (NRF), which is 17 miles south-southwest and has a daytime population of 2145 with 807 nighttime personnel. The daytime population of TAN expected during LOCEs is approximately 220 with 40 nighttime personnel.

TABLE 3-V

PREDICTED NRTS WORK FORCE DISTRIBUTION DURING TESTING

| Item | Location | Shift: Day | Shift: 4 p.m. - 12 p.m. | Shift: 12 p.m. - 8 a.m. | Saturdays, Sundays, Holidays |
|---|---|---|---|---|---|
| 1. | TAN | 220 | 40 | 40 | 40 |
| 2. | NRF | 2145 | 807 | 807 | 807 |
| 3. | EBR-II and TREAT | 535 | 25 | 20 | 20 |
| 4. | ANLW (EBR-I) and BORAX-V | 0 | 0 | 0 | 0 |
| 5. | ARA | 102 | 0 | 0 | 0 |
| 6. | SPERT and PBF | 22 | 2 | 2 | 2 |
| 7. | CFA | 600 | 20 | 10 | 20 |
| 8. | CPP | 260 | 20 | 20 | 20 |
| 9. | TRF | 420 | 40 | 40 | 40 |
| 10. | OMRE-EOCR | 0 | 0 | 0 | 0 |
| | TOTAL | 4304 | 954 | 939 | 949 |

3.8.1.2 Offsite[37]

Populations of outlying communities are shown in Table 3-VI and are depicted in Figure 3-7. Towns not appearing in the table are unincorporated, and no census figures are available.

3.8.2 Land Uses

The NRTS encompasses an area of approximately 572,000 acres, of which only 443 acres are utilized for the operational areas. The land is semiarid, covered with desert shrubs, scatter grass, and frequent lava rock outcroppings (see Figure 3-22). Controlled grazing is permitted within the site boundary; however, owing to the limited vegetation coverage and seasonal conditions, grazing is normally restricted to the spring and fall seasons. In 1970 permits for approximately 7000 sheep and 400 cattle were issued over the 5-month grazing season[38]. Open grazing areas on the NRTS are shown in Figure 3-23.

TABLE 3-VI

OFFSITE POPULATION DISTRIBUTION (1970)

| Item | Location | Straight-Line Distance from TAN (mi) | Population | Direction from TAN |
|---|---|---|---|---|
| 1. | Monteview | 11 | [a] | NE |
| 2. | Mud Lake | 12 | 194 | East |
| 3. | Terreton | 14 | [a] | East |
| 4. | Howe | 16 | 25 | WSW |
| 5. | Hamer | 26 | 181 | East |
| 6. | Atomic City | 28 | 24 | South |
| 7. | Roberts | 29 | 393 | ESE |
| 8. | Dubois | 33 | 400 | NE |
| 9. | Arco | 34 | 1,244 | WSW |
| 10. | Moore | 34 | 156 | WSW |
| 11. | Lewisville | 37 | 468 | ESE |
| 12. | Menan | 37 | 545 | ESE |
| 13. | Idaho Falls | 42 | 35,776 | SE |
| 14. | Rigby | 42 | 2,293 | ESE |
| 15. | Ucon | 42 | 664 | ESE |
| 16. | Shelley | 44 | 2,614 | SE |
| 17. | Iona | 45 | 890 | SE |
| 18. | Ammon | 46 | 1,338 | SE |
| 19. | Firth | 46 | 362 | SSE |
| 20. | Mackay | 46 | 539 | West |
| 21. | Rexburg | 47 | 4,767 | East |
| 22. | Sugar City | 48 | 617 | East |
| 23. | Blackfoot | 49 | 8,716 | SSE |
| 24. | St. Anthony | 53 | 2,877 | ENE |

[a] The rural population in the area surrounding Mud Lake, Monteview, and Terreton is approximately 1,000.

In the area near the northeast boundary of the NRTS, there are about 600 dairy cows on 91 farms. Approximately 40 of the farms use their milk for private consumption, while the rest sell their

milk, primarily for cheese production. About 40 of the farms have pasture land which is used for cattle grazing from April to October. For the remainder of the year, the cattle are normally on feedlots[37].

Irrigated farmland is found in the valleys and along the perimeter of the Snake River Plain. Most of the water for irrigation comes from the Snake River and smaller streams, the rest from wells. The irrigated farmland in the vicinity of the northern end of the NRTS, as well as the general pattern of irrigated land in southeastern Idaho, is shown in Figure 3-24.

## 3.9 Radiological Surveillance (Environmental Monitoring)

Radiological surveillance of air, water, milk, wheat, and external radiation is conducted at the NRTS and surrounding communities. The locations of the fixed stations around the NRTS where routine samples of air, water, milk, and wheat are collected are shown in Figures 3-25 and 3-26. The locations of dosimeters to measure direct radiation are also shown in Figure 3-26. Offsite underground water samples are collected at regular intervals from an area southwest of the site, the direction of underground waterflow. Two surface water sampling stations are located at the Snake River near Idaho Falls and Bliss.

Onsite samples are taken from about 90 observation wells in and near the plant sites in order to monitor (a) water used for consumption by NRTS personnel and (b) the migration of wastes discharged to the aquifer from other NRTS facilities.

## 3.10 References


1. R. L. Nace et al, Geography, Geology, and Water Resources of the National Reactor Testing Station, Idaho, Part 2, IDO-22033 (1956).
2. R. L. Nace et al, Geography, Geology, and Water Sources of the NRTS, Idaho, Part 3, IDO-22034 (1959).
3. Parsons Company, Drawing 1229-2-ANP/GE-5-102, Rev. A, "ANP Flight Engine Test Facility Soil Boring Plan and Logs" (Data from Dames and Moore, Soil Mechanics Engineers, "Report of Foundation Investigations" (July 23, 1956).

4. Burns and Roe, Inc., Drawings (Sheets 1 through 4) 2129-TAN/LCRE-103-2, -3, -4, -5 ("LCRE Reactor Test Facility Log of Borings") and 2129-TAN/LCRE-103-1 ("LCRE Reactor Test Facility Boring Location Plan") (boring work performed by Gem State Testing Company).

5. Aerojet Nuclear Company, Construction Engineering Division, Construction Log Files.

6. Kaiser Engineers, "Engineering Report on Soils Investigation for Loss of Fluid Test Facility", Report 64-35-R (July 1964).

7. R. R. Shrock, Sequence in Layered Rocks, New York: McGraw-Hill Book Company, 1948, p 367.

8. G. A. MacDonald, "Pahoehoe, Aa and Black Lava", American Journal of Science, 251 (March 1953) pp 169-191.

9. Ibid, pp 171-173.

10. C. K. Wentworth and G. A. MacDonald, "Structures and Forms of Basaltic Rocks in Hawaii", U. S. Geological Survey Bulletin 994 (1953).

11. R. A. Epperly, "Earthquake History of the United States, Part I Stronger Earthquakes of the United States", U. S. Coast and Geodetic Survey No. 41-1 (Revised Edition through 1963) 1965.

12. International Conference of Building Officials, Uniform Building Code, Volume I (1970).

13. Idem, Uniform Building Code, "Seismic Probability Map of the United States", Volume I (1970) p 122.

14. Marc L. Sbar and Muawia Barazangi, "Tectonics of the Intermountain Seismic Belt, Western United States", Geol. Soc. Am. Abstracts with Programs, 2, No. 7 (1970).

15. Bonilla and Chase, "Preliminary Investigation of Potential for Faulting and Earthquakes at the National Reactor Testing Station, Idaho" (Unpublished report for USAEC by U. S. Geological Survey, 1968).

16. H. E. Malde, "Geologic Investigations of Faulting Near the National Reactor Testing Station, Idaho", U. S. Geological Survey, Open File Report (1971).

17. A. H. Dahl and M. R. Niccum, "Preliminary Results of a Microseism Study for the Region Around the Snake River Plain", Proceedings of Twelfth Annual Engineering, Geology, and Soils Engineering Symposium, Pocatello, Idaho (April 4-6, 1973) (to be published).

18. International Conference of Building Officials, Uniform Building Code, Eleventh Edition, Revised (1961).

19. Warren Hamilton and W. B. Meyers, "Cenozoil Tectonics of the Western United States", Review of Geophysics, 4 (1966) pp 509-549.

20. B. Perkins, Jr. et al, "Subsurface Structure of the Snake River Valley, Idaho, from Seismograph Records of Ammunition Explosions", Geophysics, 12, No. 2 (July 1947) p 496 (Abstract).

21. G. R. Yanskey et al, Climatography of the National Reactor Testing Station, IDO-12048 (January 1966).

22. G. A. Demarrais, The Climatology of the National Reactor Testing Station, IDO-12003 (1958).

23. G. A. Demarrais, The Engineering Climatology of the National Reactor Testing Station, IDO-12004 (1958).

24. G. A. Demarrais and N. F. Islitzer, The Diffusion Climatology of the National Reactor Testing Station, IDO-12015 (1959).

25. B. L. Schmalz and W. L. Polzer, "Tritiated Water Distribution in Unsaturated Soil", Soil Science, 108 (1969) pp 43-47.

26. Memorandum from C. R. Dickson, National Oceanic and Atmospheric Administration, "NRTS Tornado and Funnel Cloud Summary(1950-1971)" (November 3, 1971).

27. E. Kessler, Tornadoes, Bulletin American Meteorological Society, 51, No. 10 (October 1970).

28. D. E. Simpson, Review of Tornado Considerations for FFTF, HEDL-TME71-35 (1971) (attachment to this report is Dotson's and Miller's work).

29. T. T. Fujita, Estimate of Maximum Windspeeds of Tornadoes in Three Northwestern States, Appendix to HEDL-TME71-35.

30. H. C. S. Thom, Tornado Probabilities, Monthly Weather Review, 91:730-736 (October-December, 1963).

31. Letter, F. H. Anderson, Allied Chemical Corporation, to C. W. Bills, USAEC Idaho Operations Office, "Consequences of Tornado at ICPP", FHA-137-71 (August 11, 1971).

32. J. R. Fielding, Aerojet Nuclear Company, private communication with Dr. Edwin Kessler, National Severe Storms Laboratory, Norman, Oklahoma (February 15, 1972).

33. Letter, C. R. Dickson, National Oceanic and Atmospheric Administration to D. I. Walker, USAEC Idaho Operations Office, "NOAA Support for LOFT FSAR Meteorological Data HLC-73-73" (February 14, 1973).

34. USAEC Division of Reactor Safety, Safety Guide 23, "Onsite Meteorological Programs" (February 17, 1972).

35. Letter, C. R. Dickson, Environmental Science Services Administration, to R. E. Tiller, USAEC Idaho Operations Office, "Standardized Selection of Meteorological Parameters for NRTS Diffusion Calculations" (July 8, 1969).

36. USAEC Division of Reactor Safety, Safety Guide 4, "Assumptions Used for Evaluating the Potential Radiological Consequences of a Loss-of-Coolant Accident for Pressurized Water Reactors" (November 2, 1970).

37. U. S. Department of Commerce, Bureau of the Census, "1970 Census of Population, PC(1)-A" (October 1970).

38. C. H. Cooper, Aerojet Nuclear Company, private communication with Bureau of Land Management, District Office, Idaho Falls, Idaho.

39. J. R. Horan et al, Experiences in Site Selection at the National Reactor Testing Station, IDO-12033 (1963).

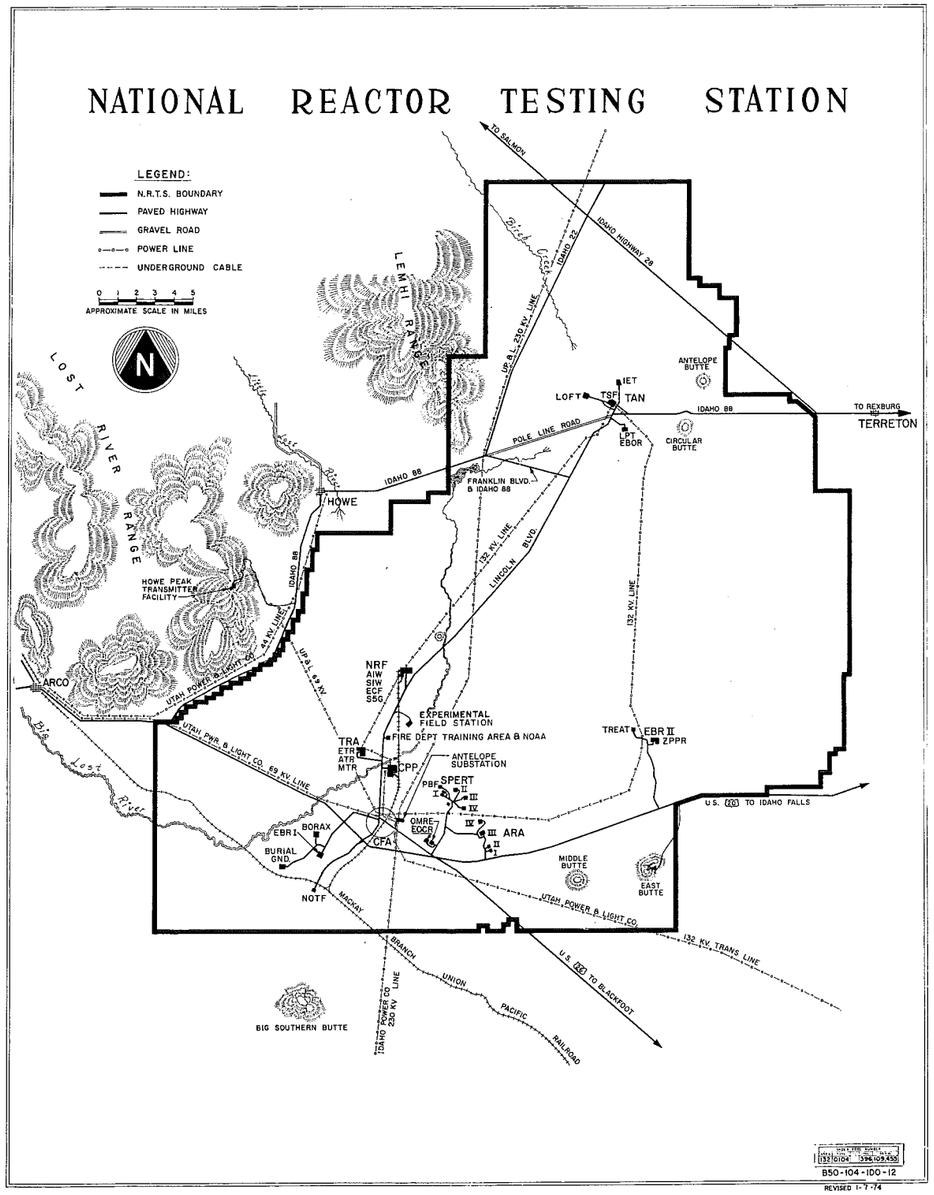


FIG. 3-1 NATIONAL REACTOR TESTING STATION.

(B50-104-IDO-12)

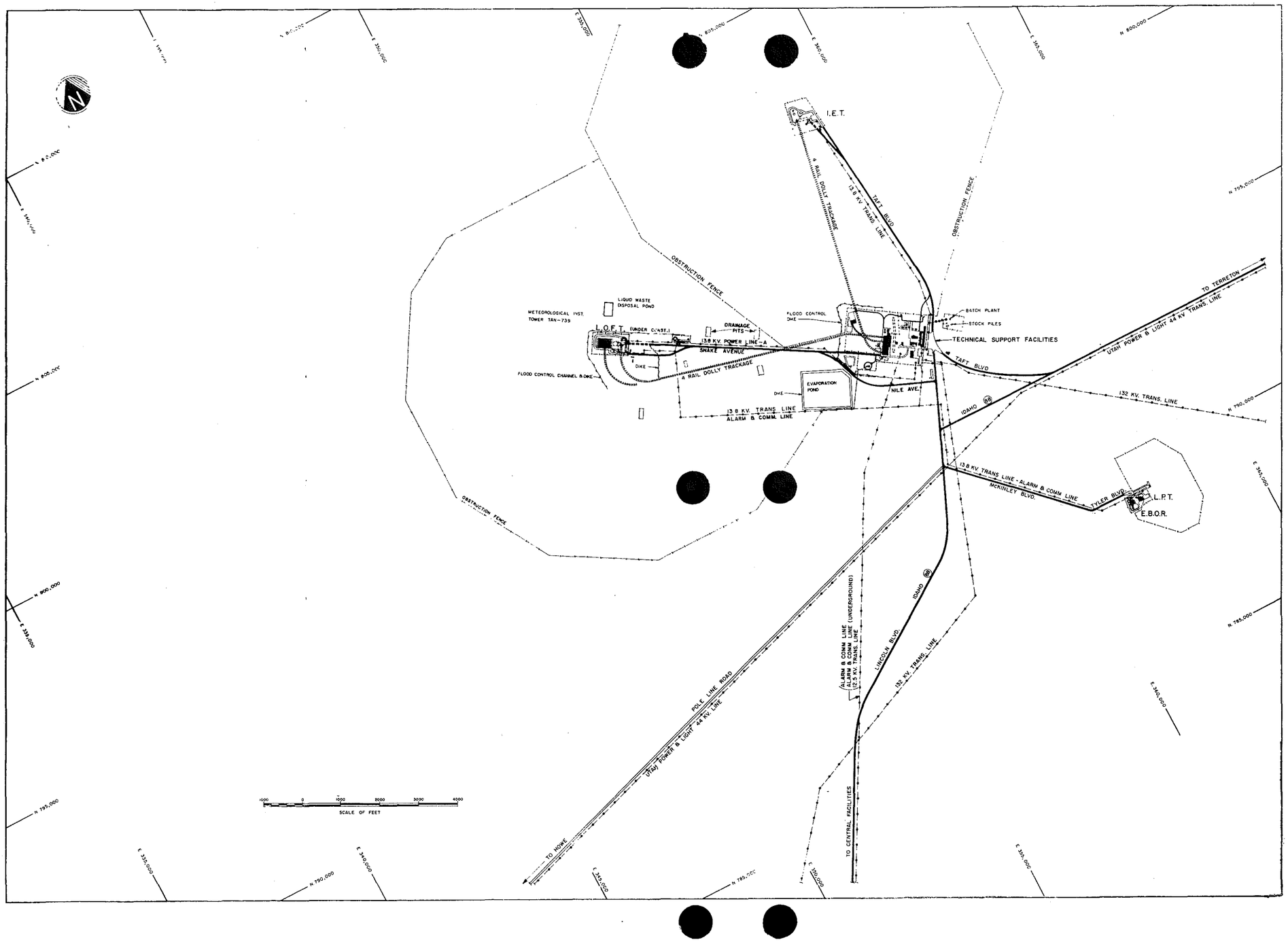


FIG. 3-2 TEST AREA NORTH, NRTS.

(111-IDO-9-5)

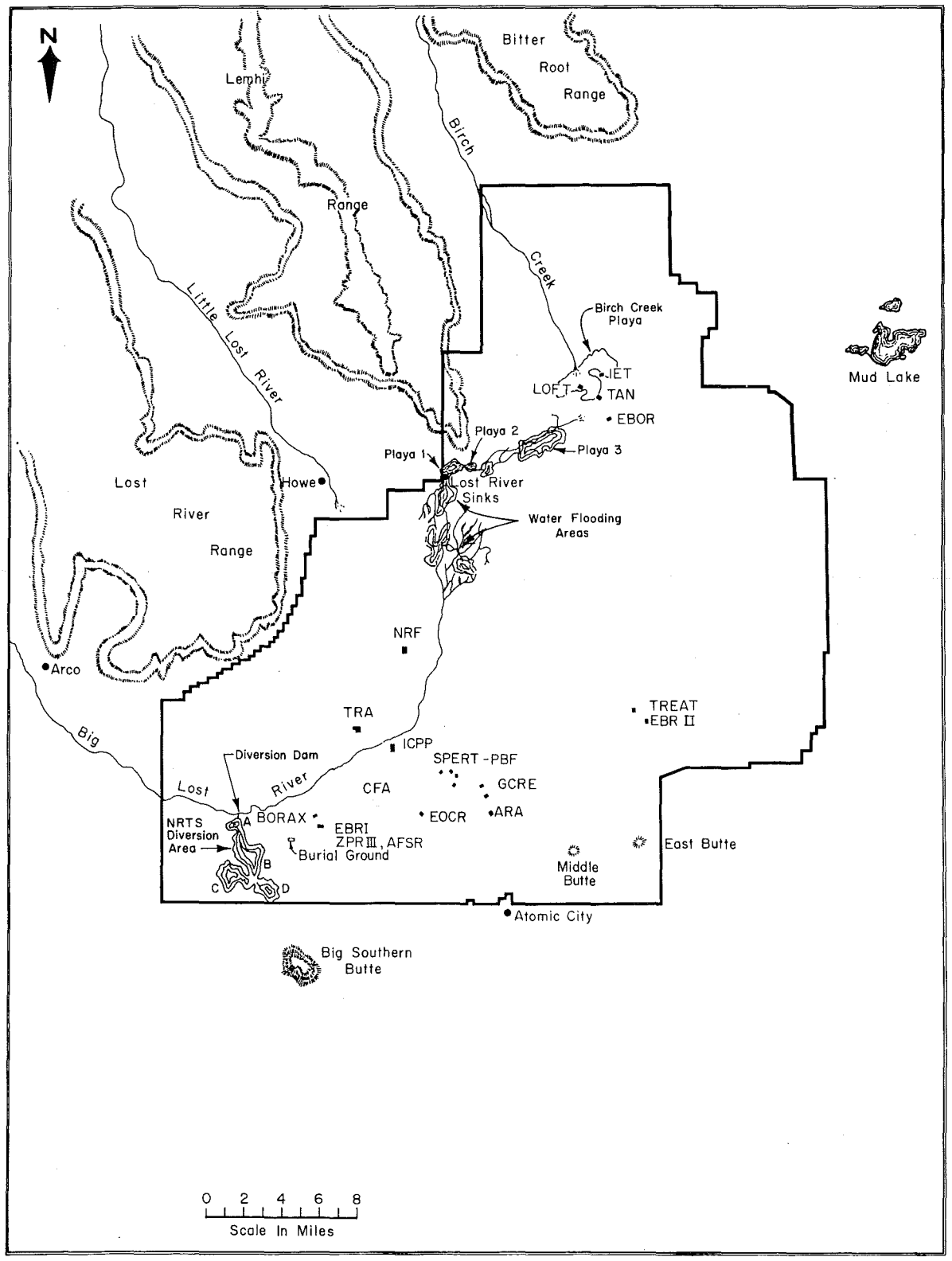


FIG. 3-3 RIVERS AND FLOOD PLAINS OF NRTS.

(USGS)

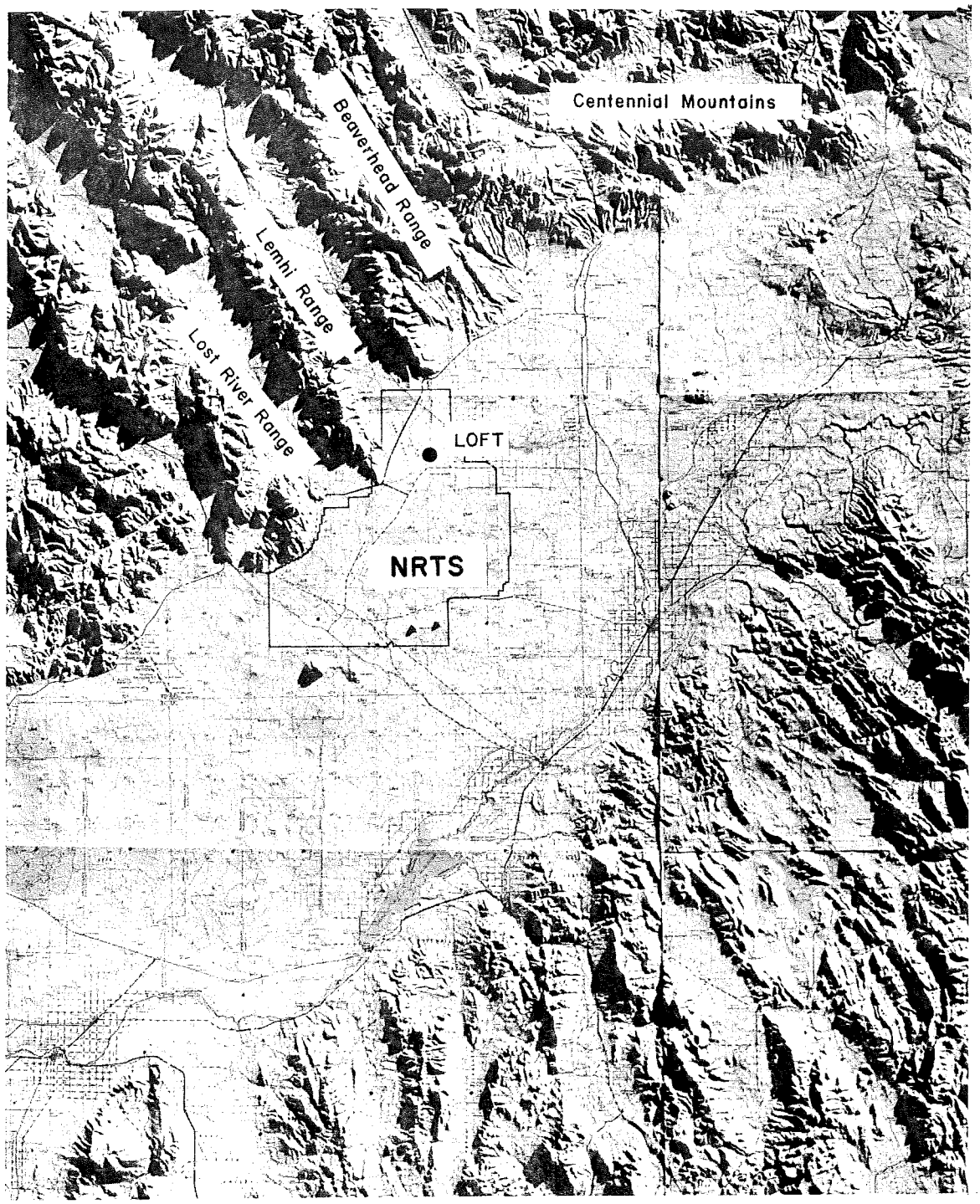


FIG. 3-4 NRTS AND SOUTHEASTERN IDAHO.

(68-3668)

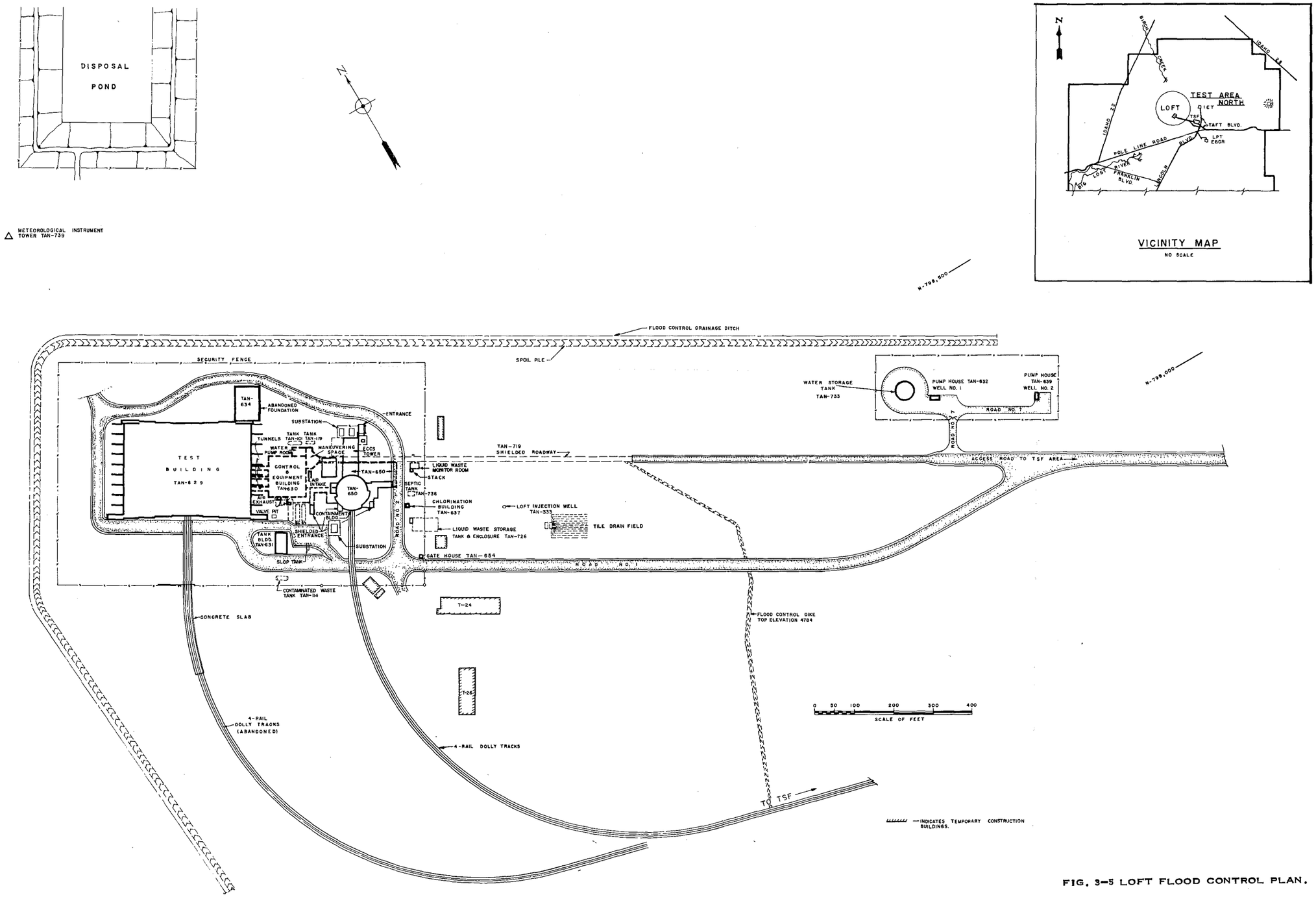


FIG. 3-5 LOFT FLOOD CONTROL PLAN.

(LOFT-107-1-1R)

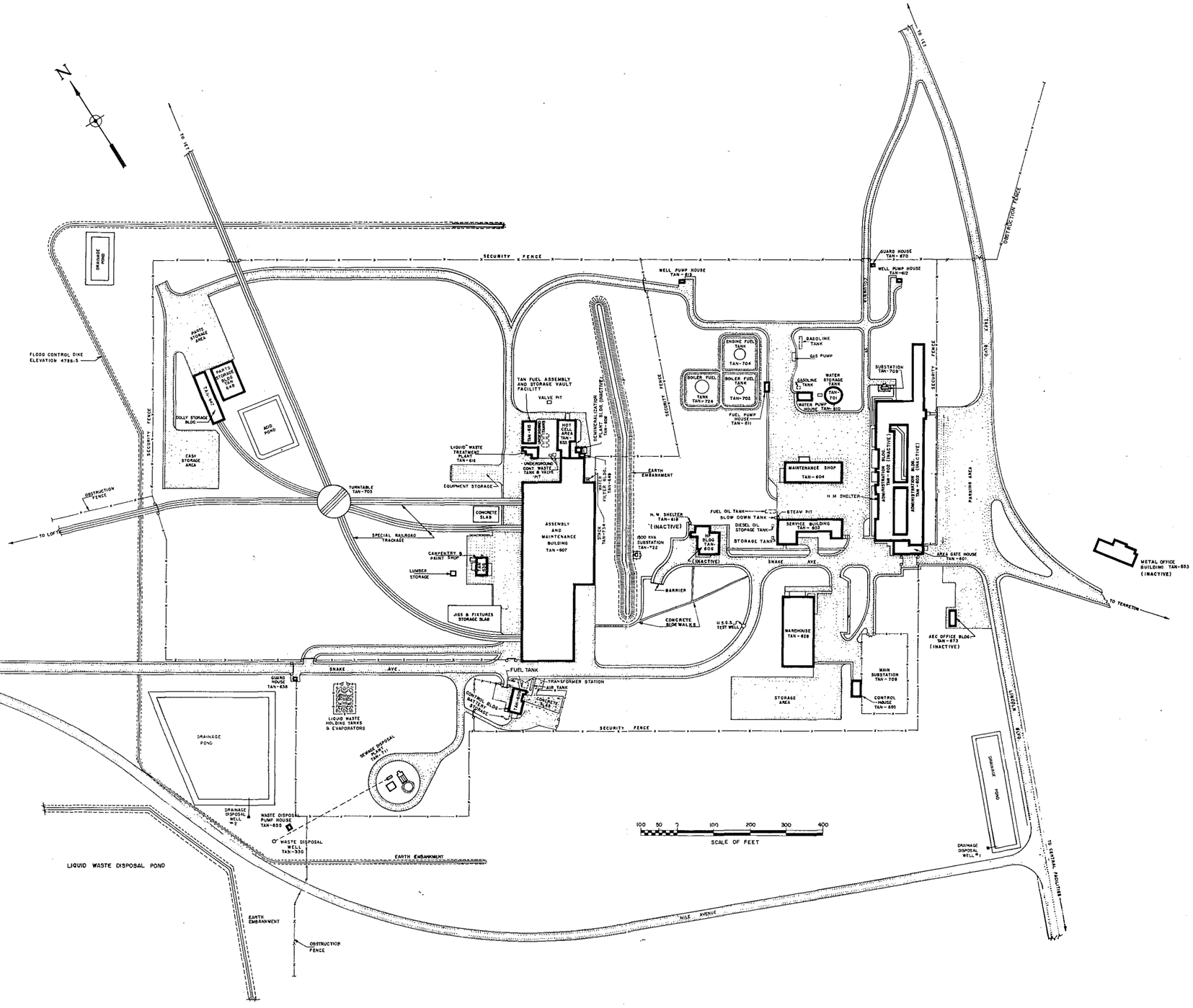


FIG. 3-6 TSF FLOOD CONTROL PLAN.

(TSF-2-111-1DO-3R)

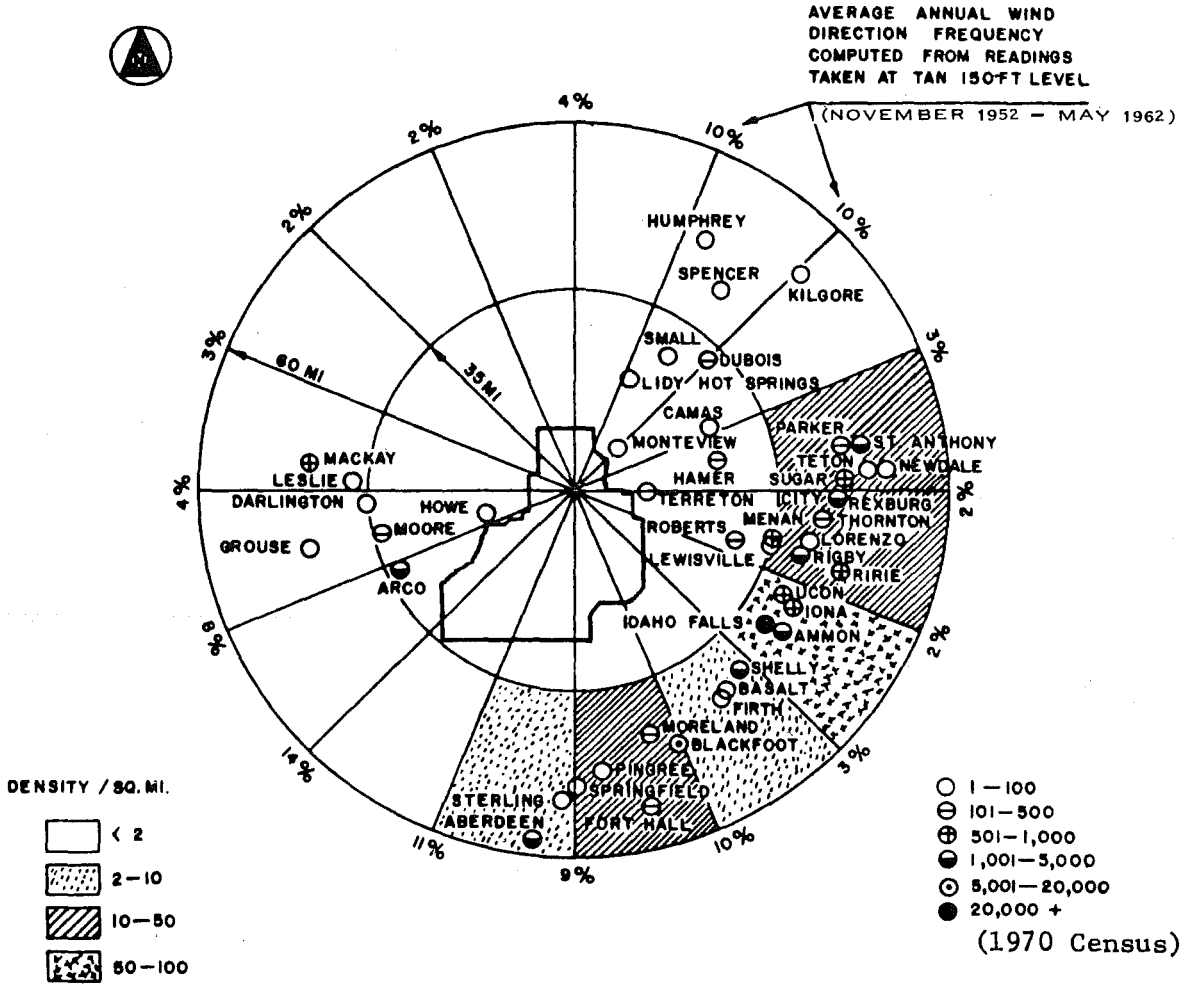


FIG. 3-7 POPULATION DISTRIBUTION AND WIND FREQUENCIES ABOUT TEST AREA NORTH.

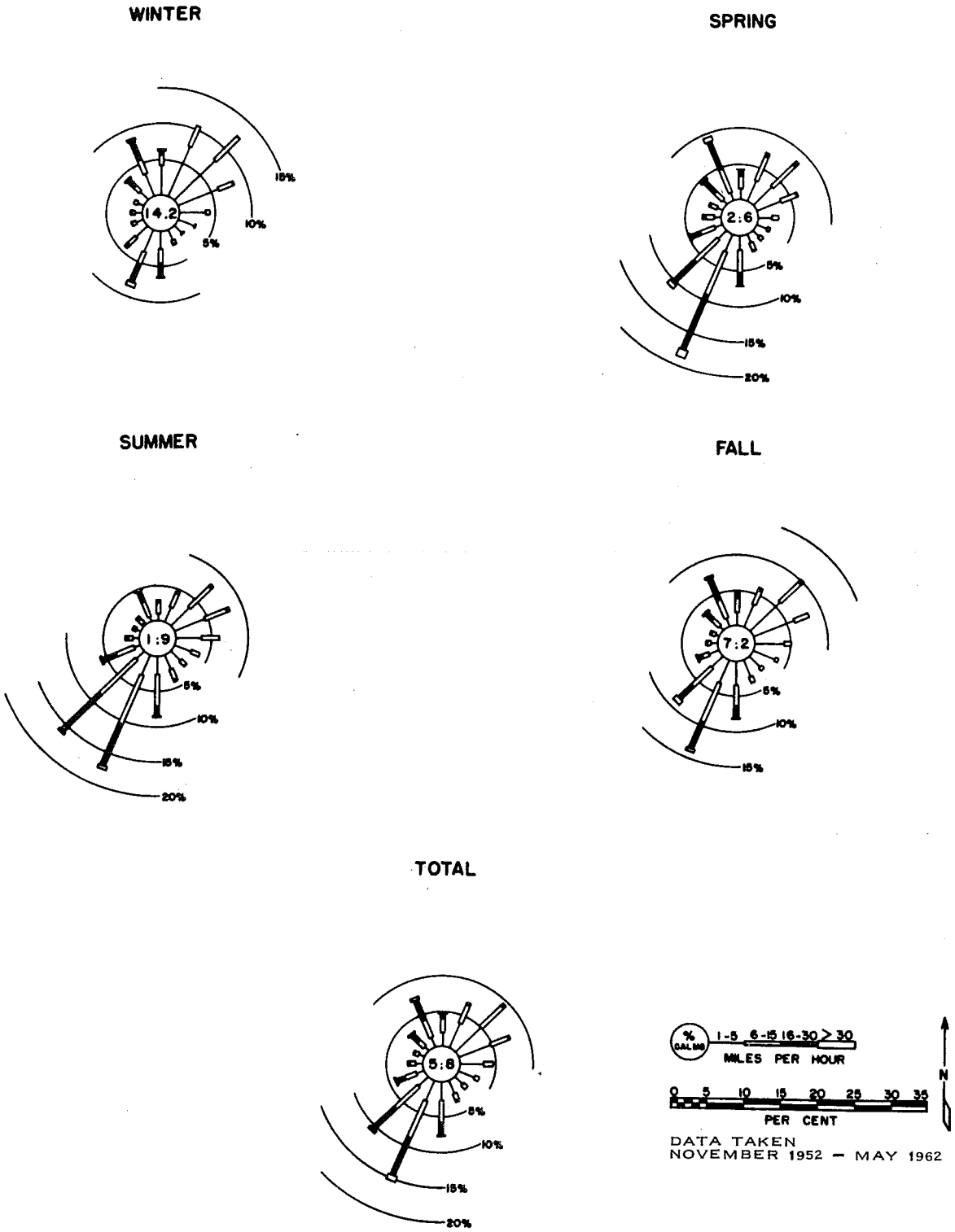


FIG. 3-8 TAN 20-FT-LEVEL LAPSE WIND ROSES.

(IDO-12048)

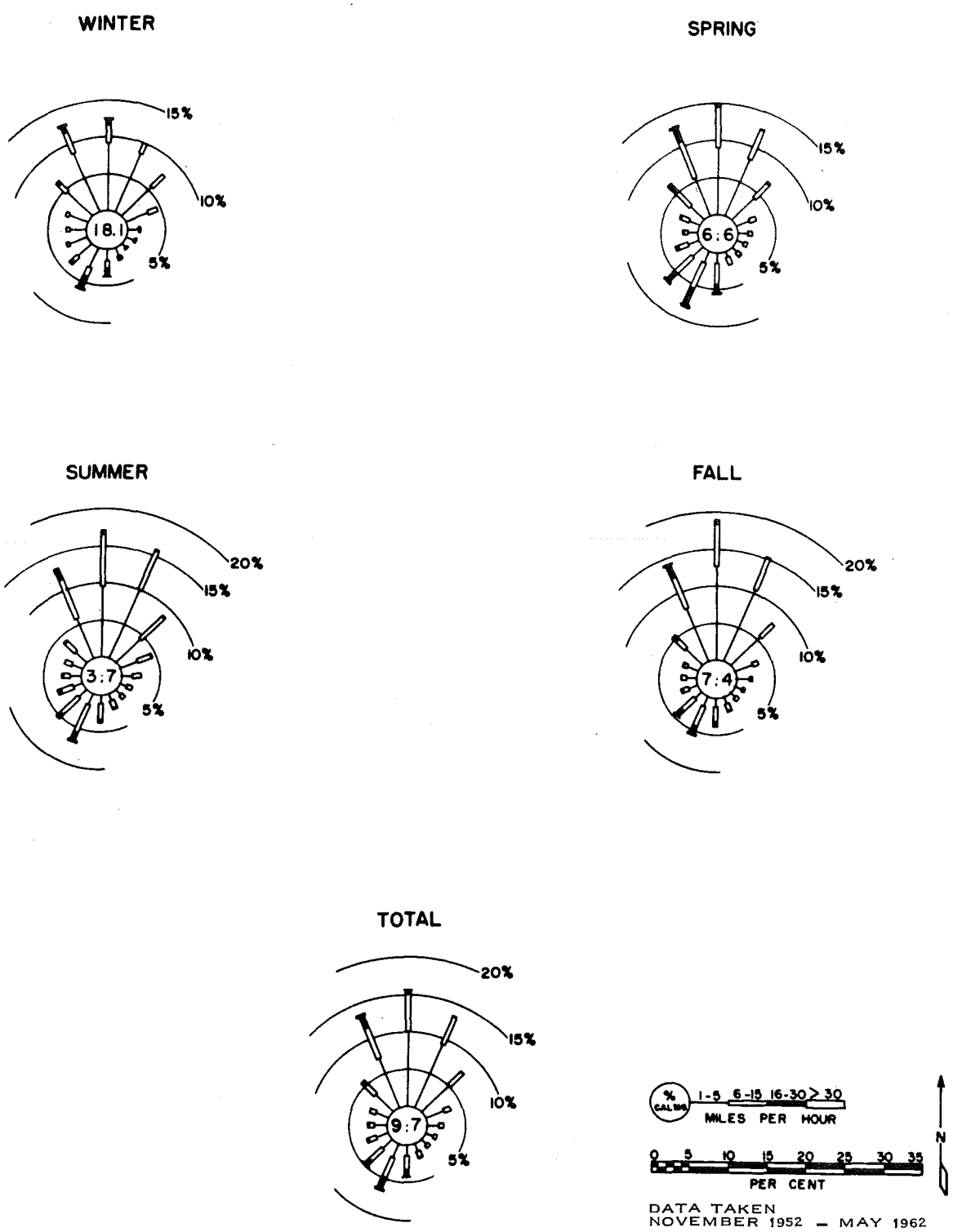


FIG. 3-9 TAN 20-FT-LEVEL INVERSION WIND ROSES.

(IDO-12048)

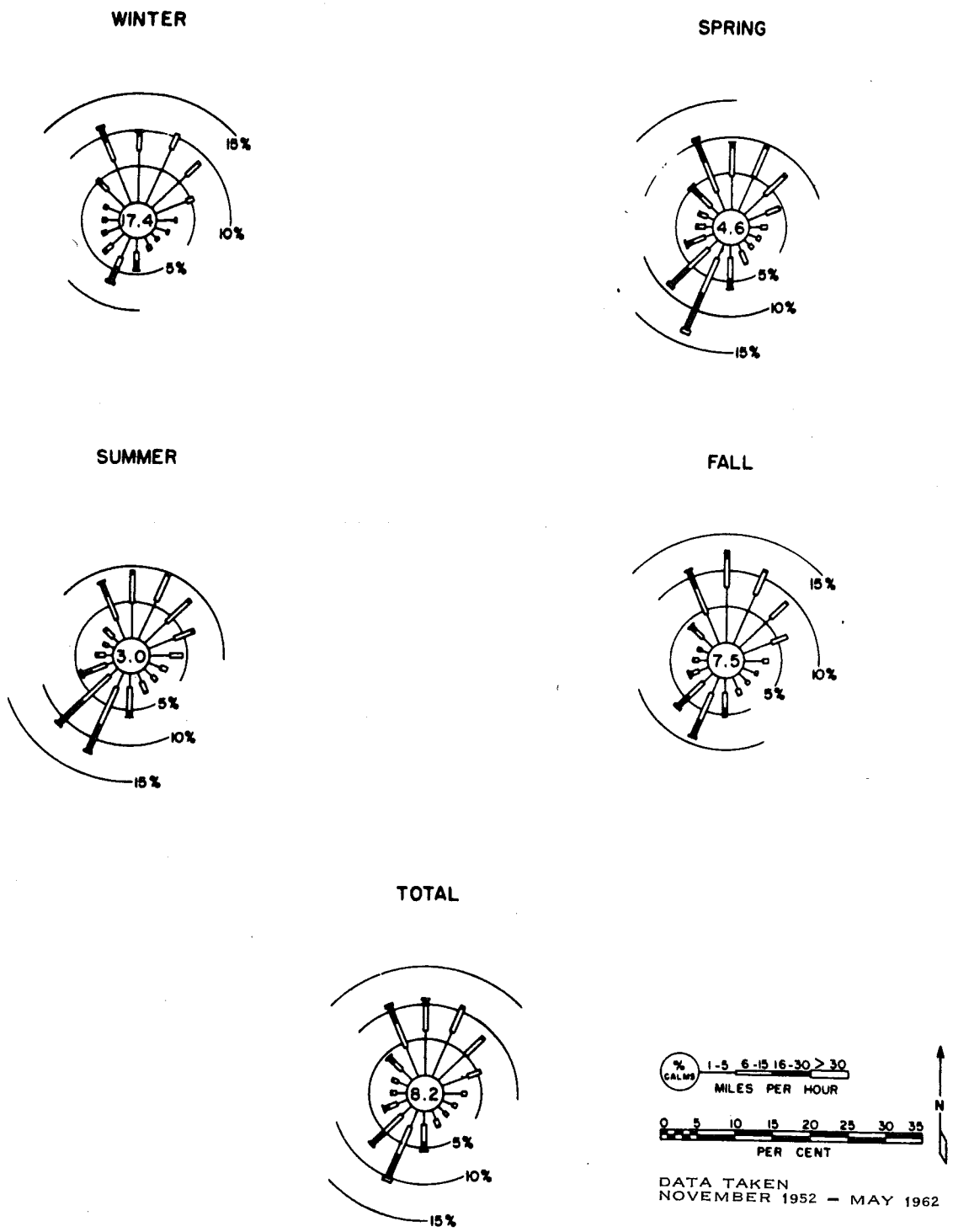


FIG. 3-10 TAN 20-FT-LEVEL WIND ROSES.
(IDO-12048)

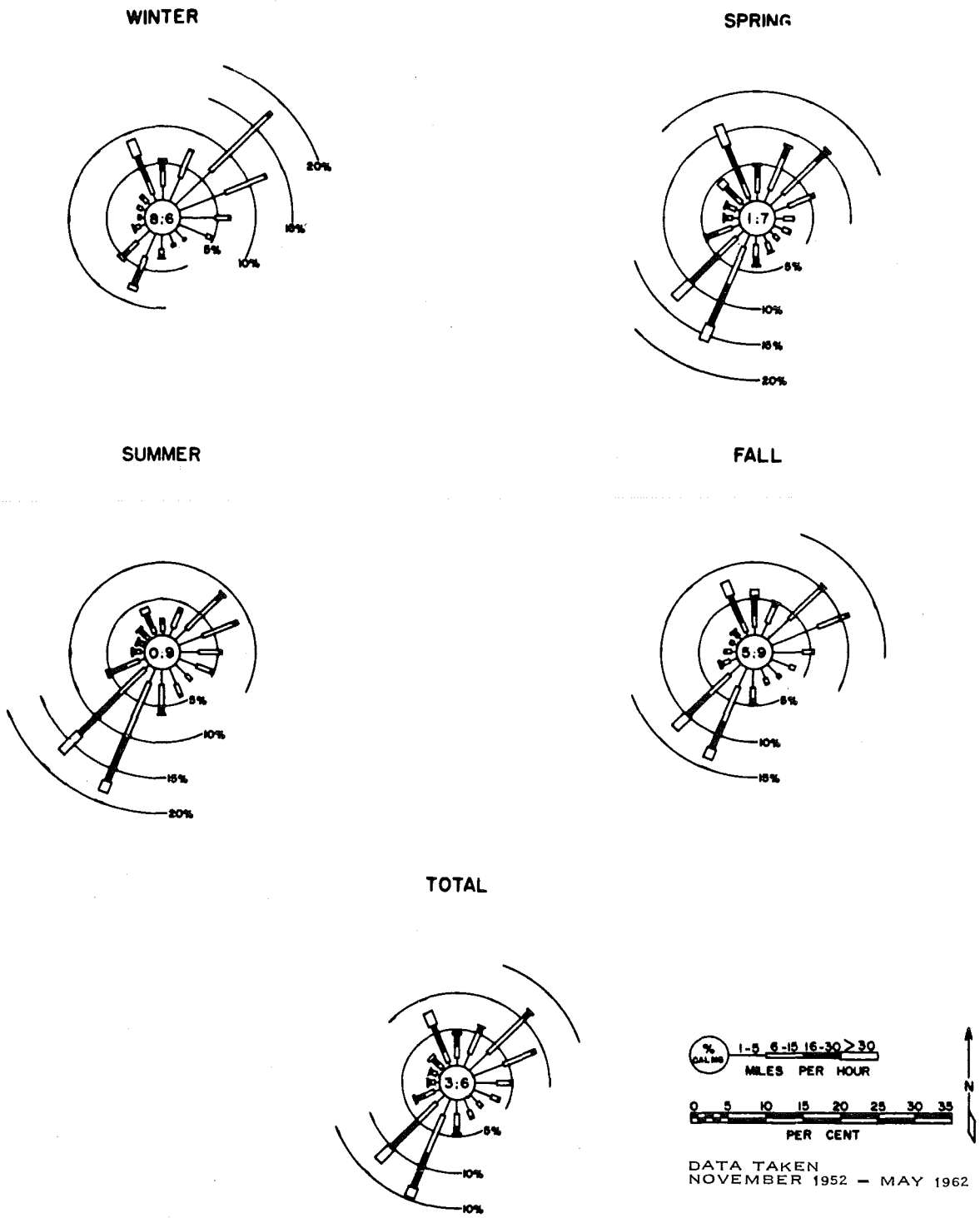


FIG. 3-11 TAN 150-FT-LEVEL LAPSE WIND ROSES.
(IDO-12048)

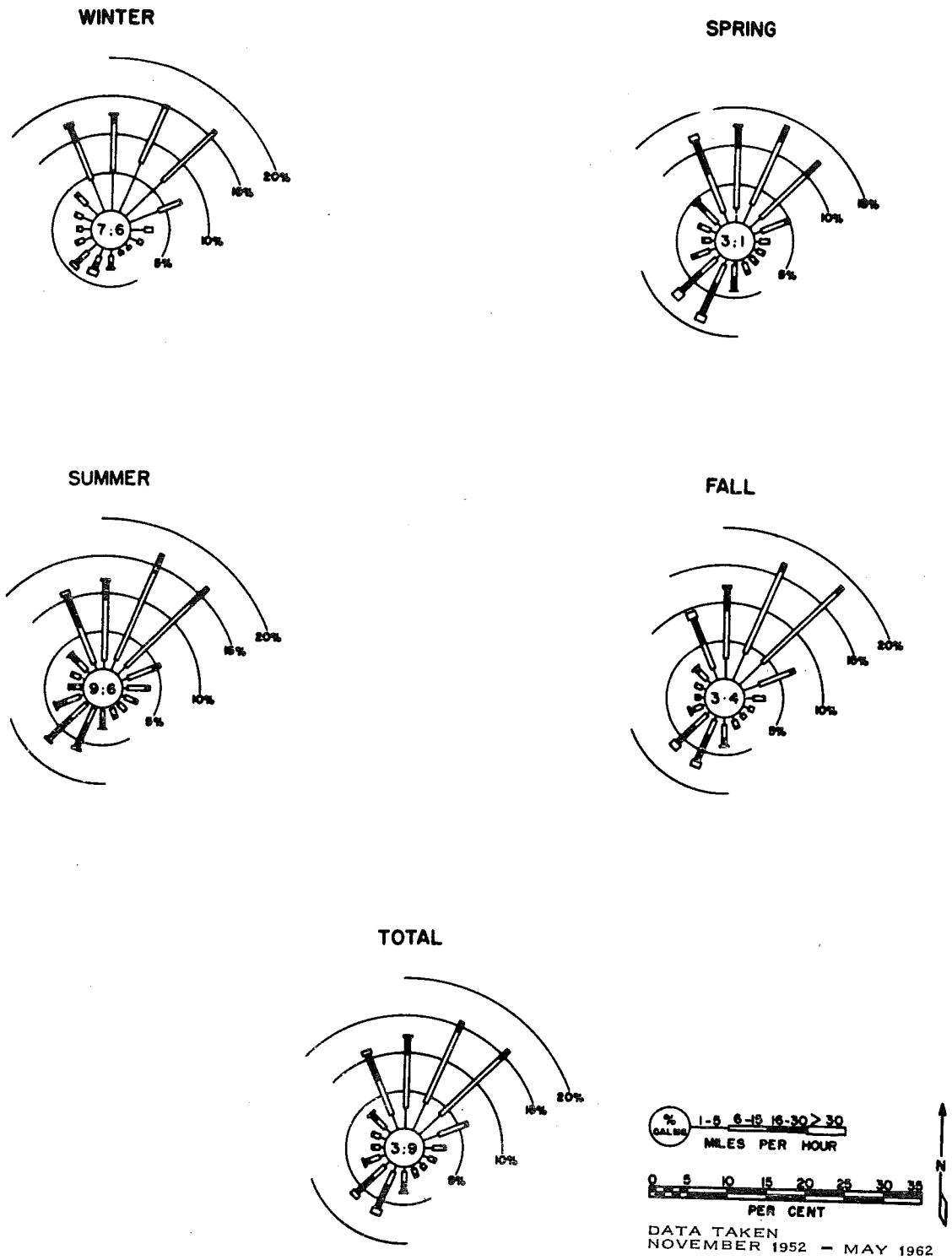


FIG. 3-12 TAN 150-FT-LEVEL INVERSION WIND ROSES.

(IDO-12048)

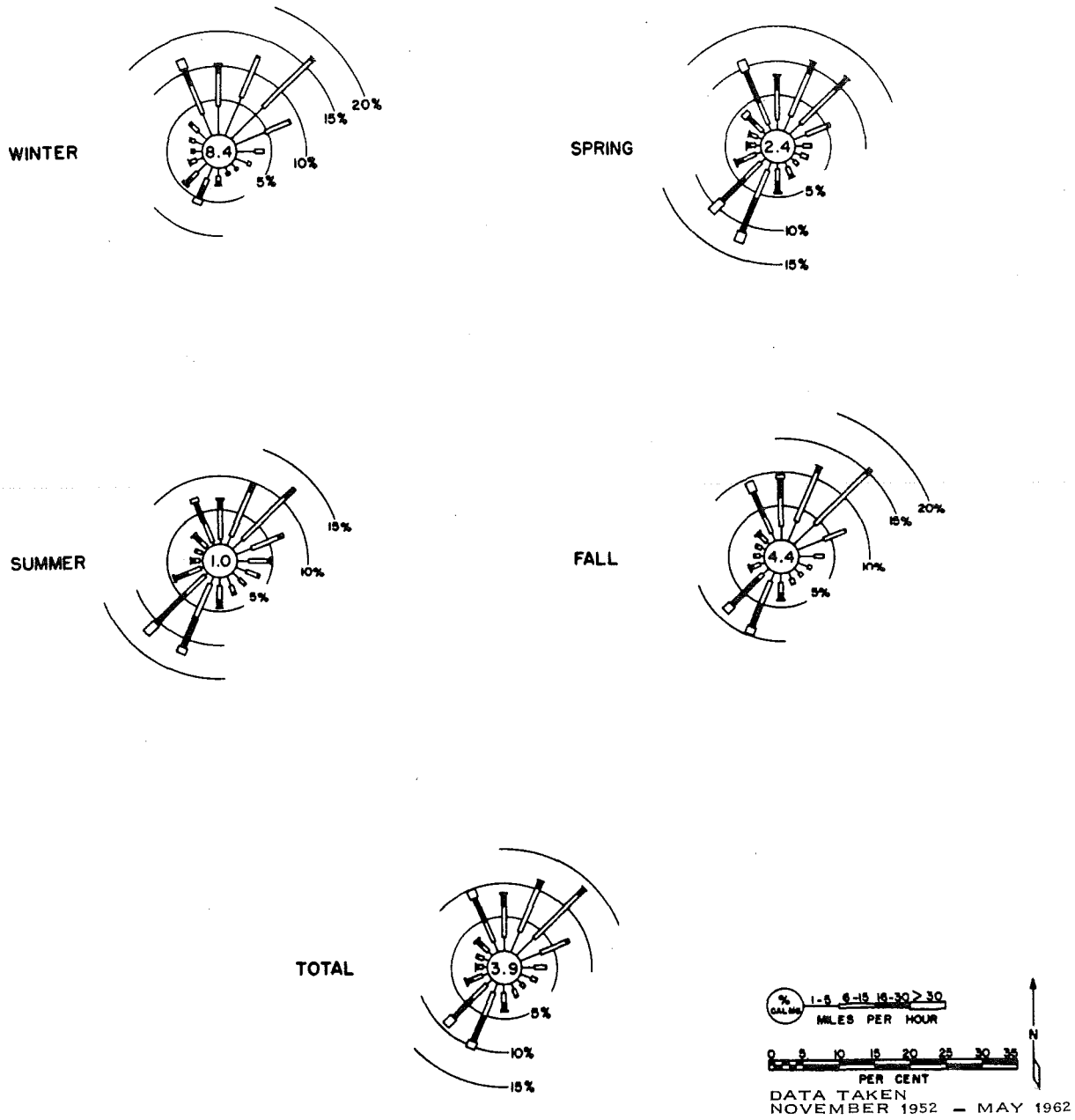


FIG. 3-13 TAN 150-FT-LEVEL WIND ROSES.
(IDO-12048)

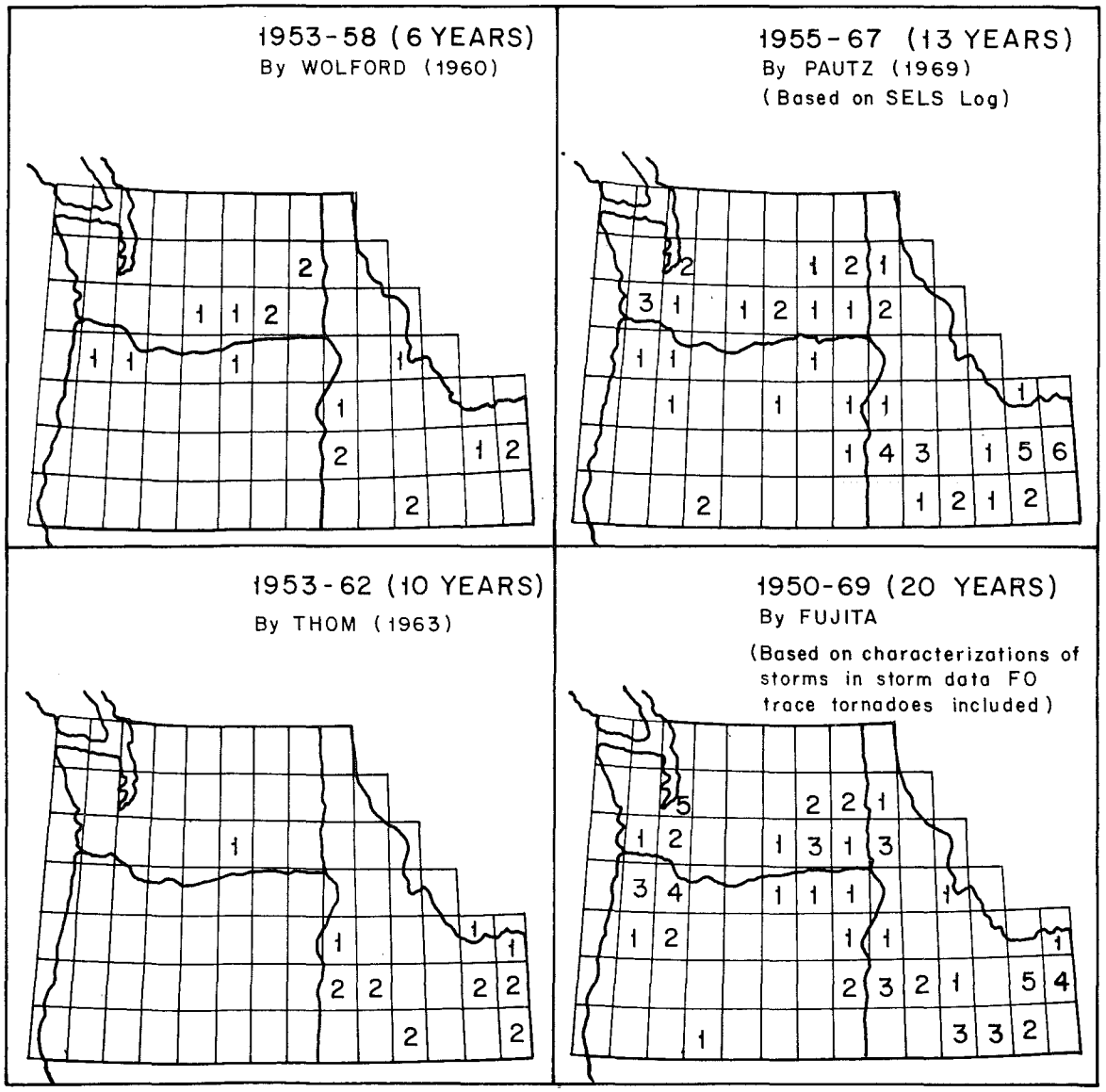


FOUR EXAMPLES OF TORNADO-FREQUENCY CHARTS SHOWING THE OCCURRENCES WITHIN ONE-DEGREE SQUARES

ANC-A-1249

FIG. 3-14 TORNADO FREQUENCY IN NORTHWEST STATES.

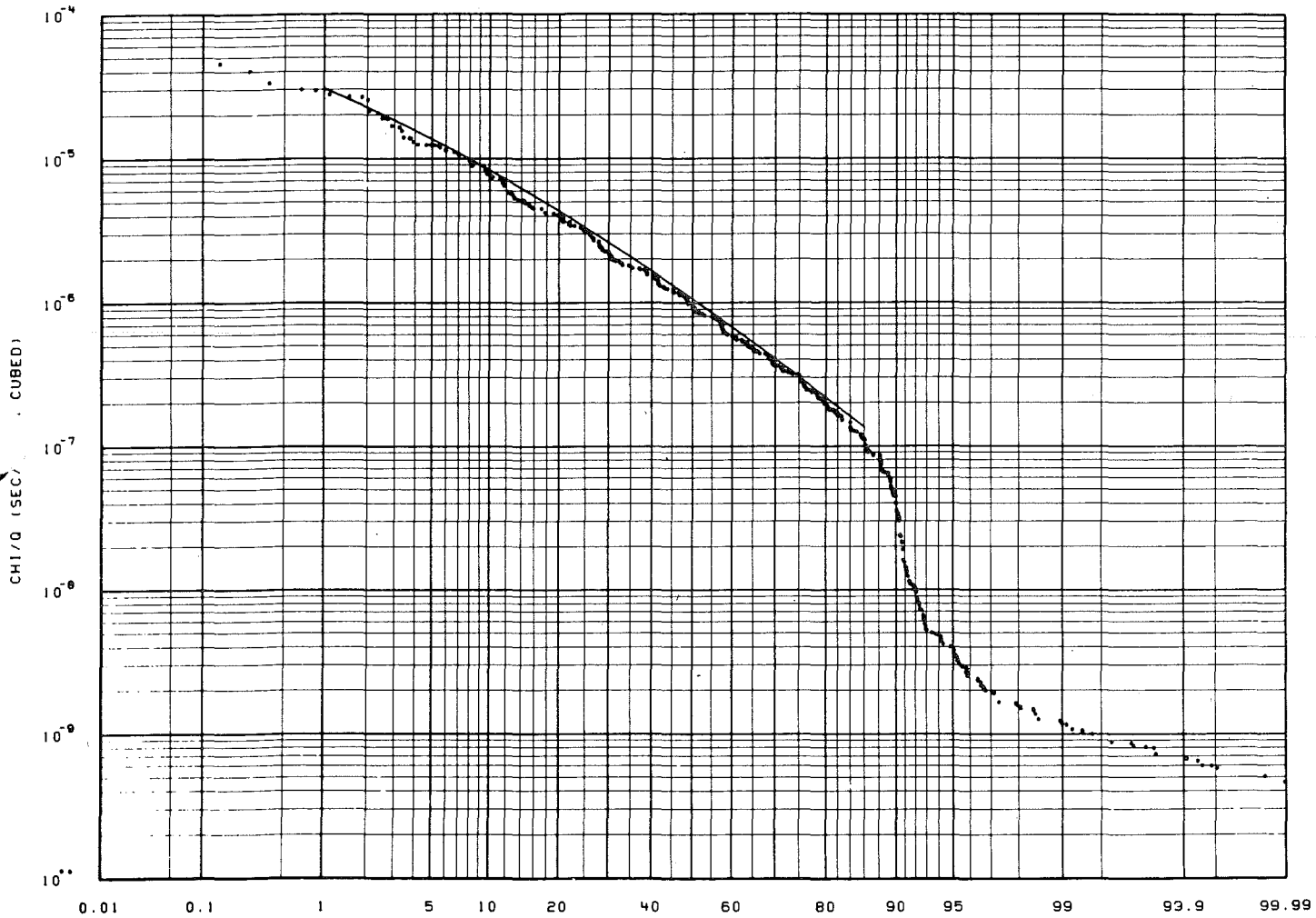


FIG. 3-15 NATURAL OCCURRENCE OF CHI/Q AT SITE BOUNDARY SURROUNDING LOFT.
(NOAA)

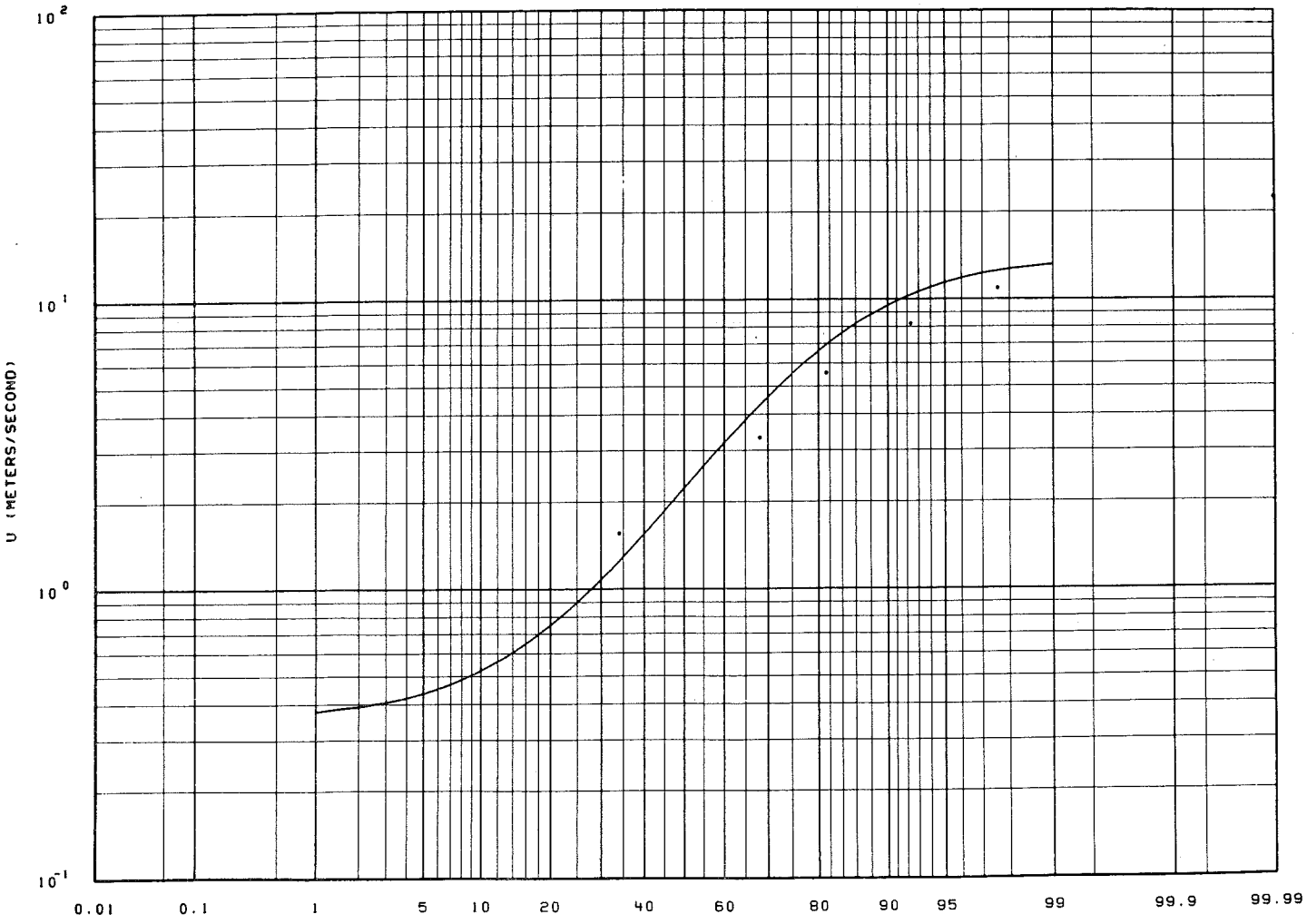


FIG. 3-16 LOFT WINDSPEED DURING ALL STABILITY CLASSIFICATIONS.
(NOAA)

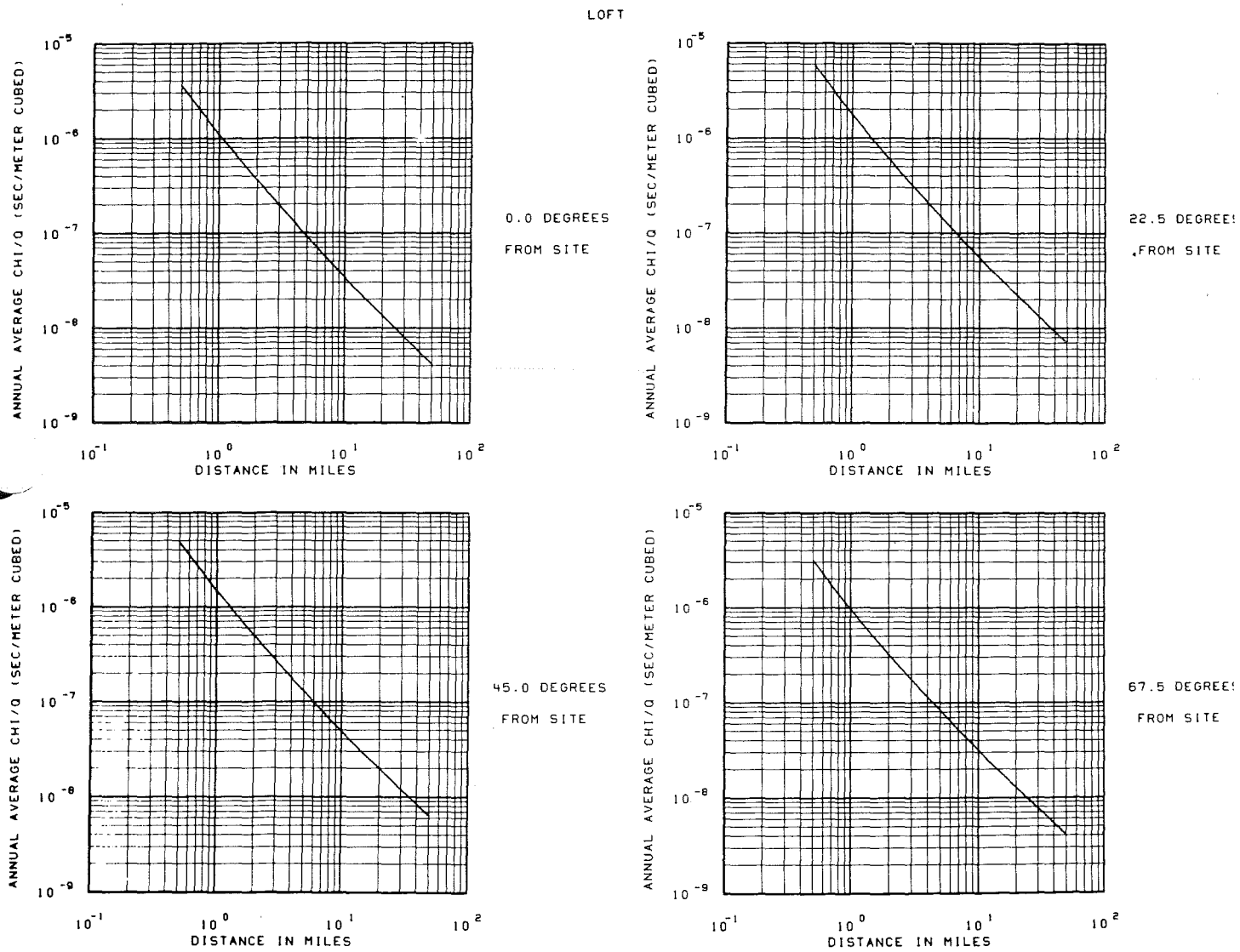


FIG. 3-17A ANNUAL AVERAGE CHI/Q AS A FUNCTION OF DISTANCE AND SECTOR, (NOAA)

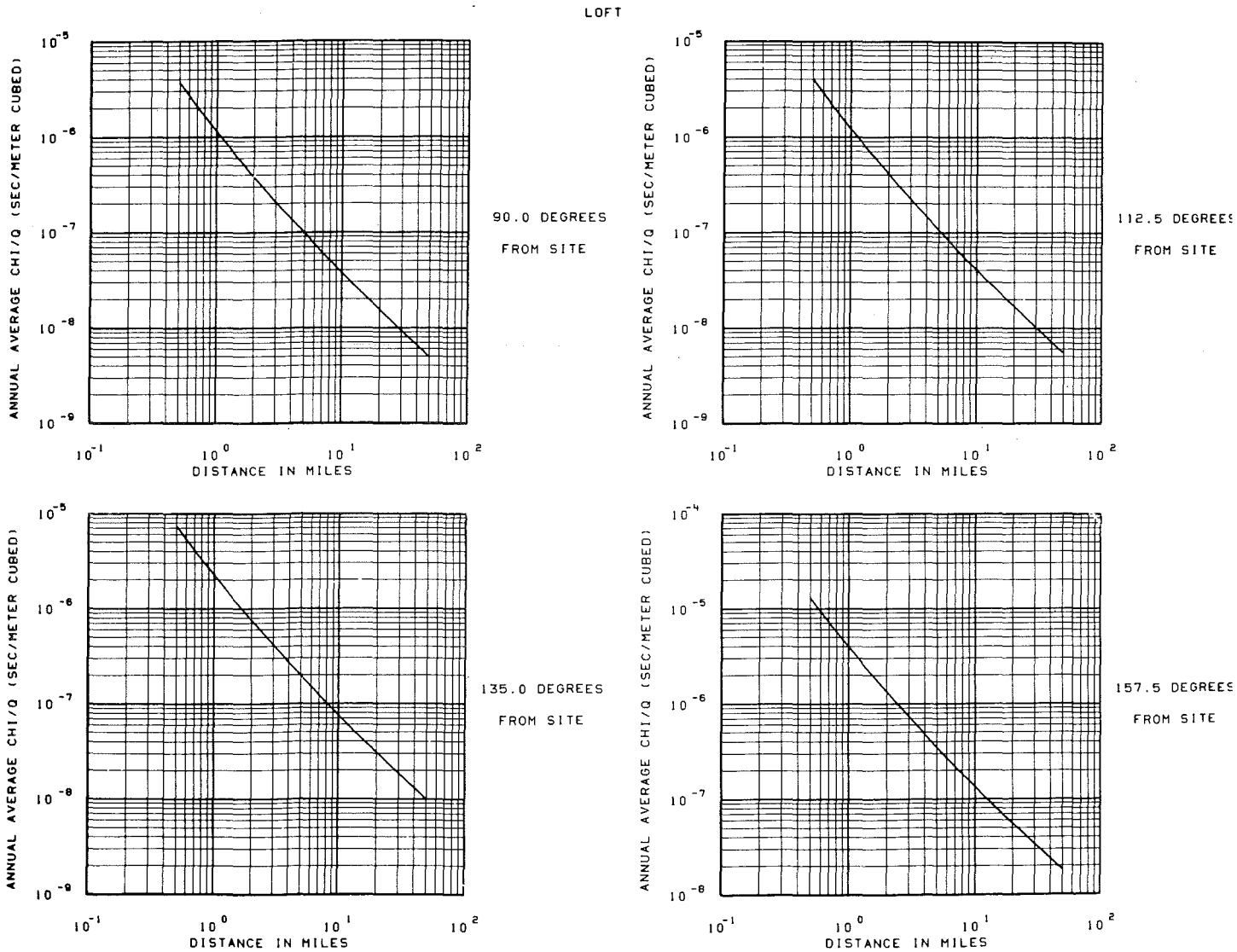


FIG. 3-17B ANNUAL AVERAGE CHI/Q AS A FUNCTION OF DISTANCE AND SECTOR.
(NOAA)

LOFT

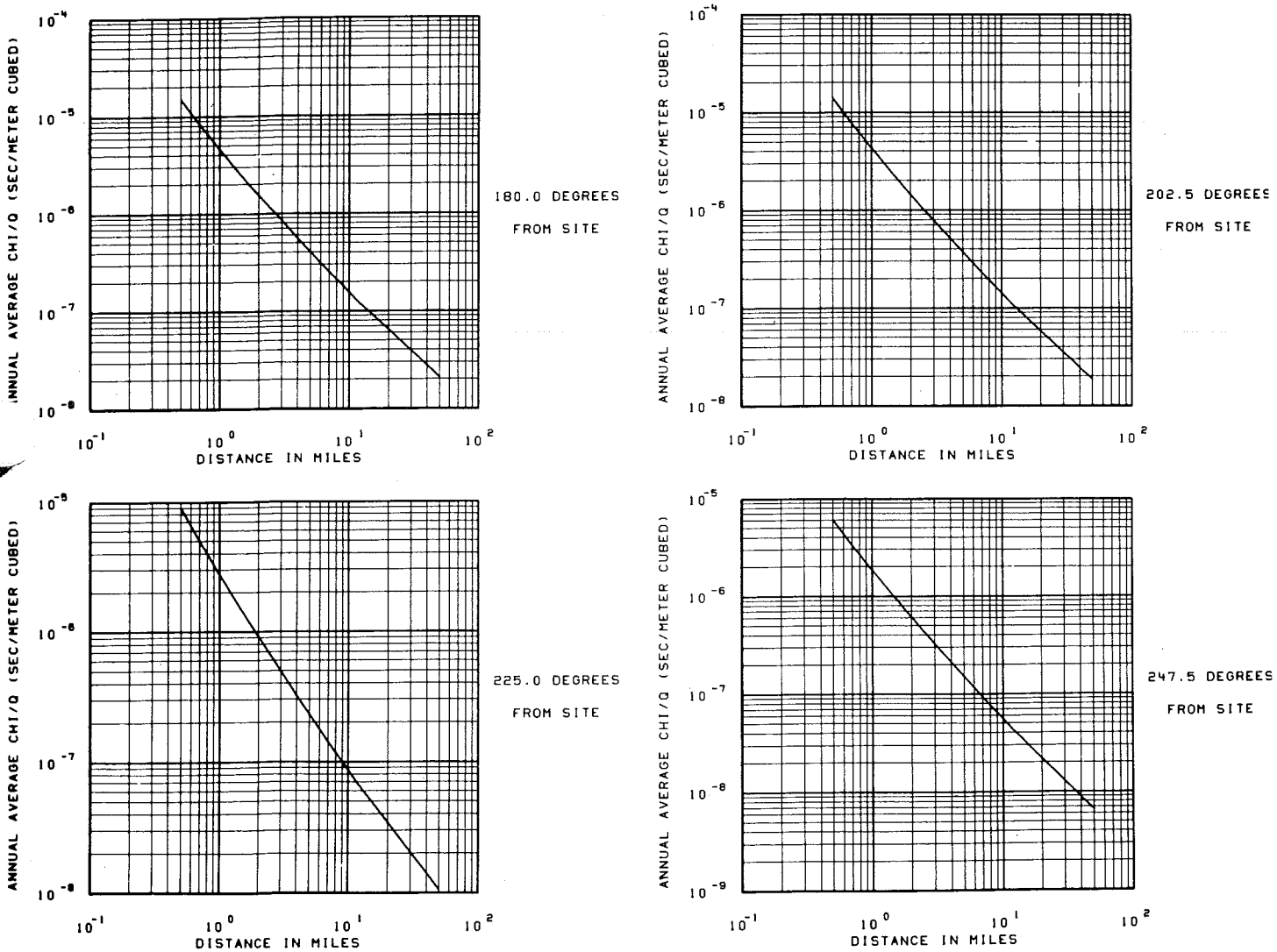


FIG. 3-17C ANNUAL AVERAGE CHI/Q AS A FUNCTION OF DISTANCE AND SECTOR. (NOAA)

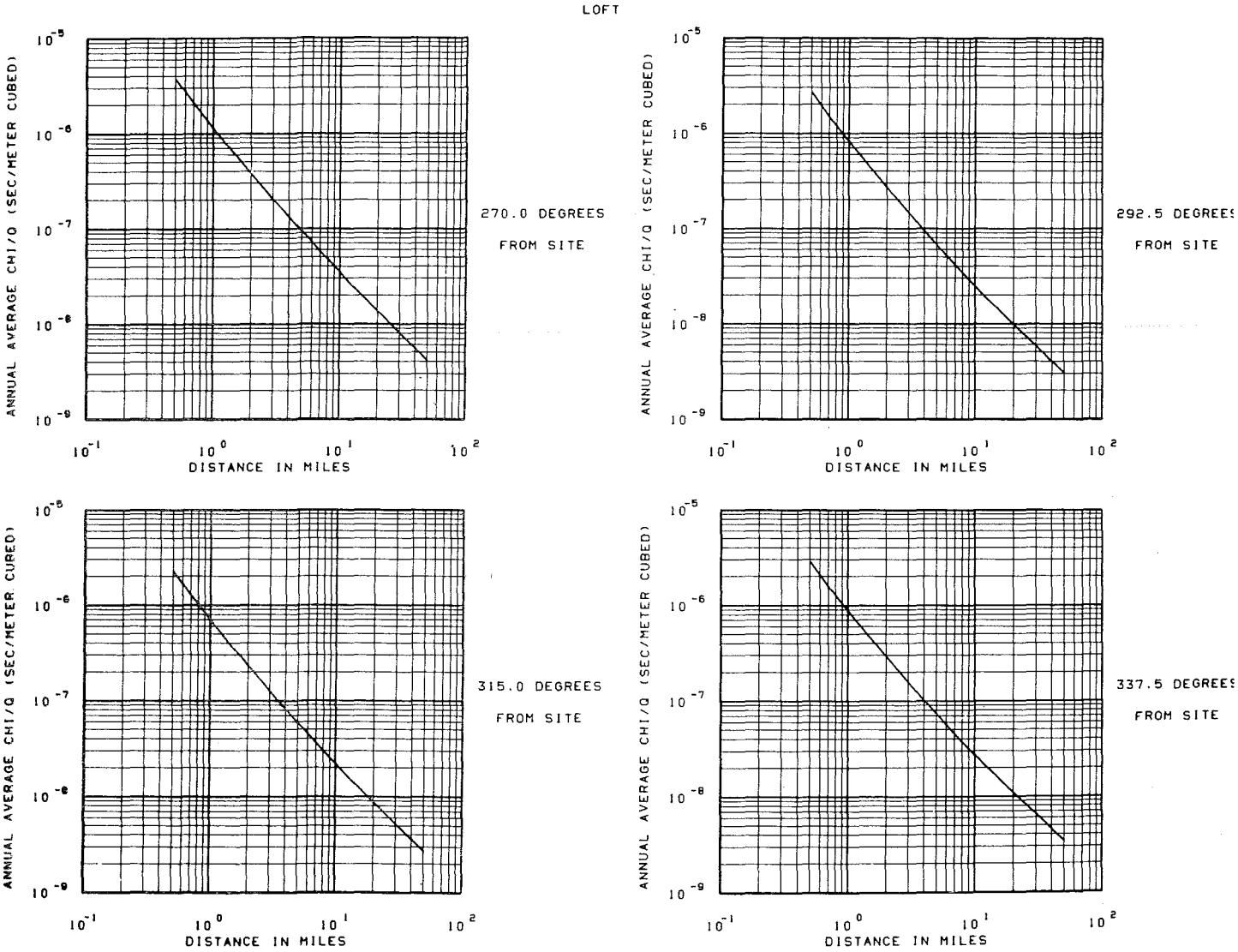


FIG. 3-17D ANNUAL AVERAGE CHI/Q AS A FUNCTION OF DISTANCE AND SECTOR. (NOAA)

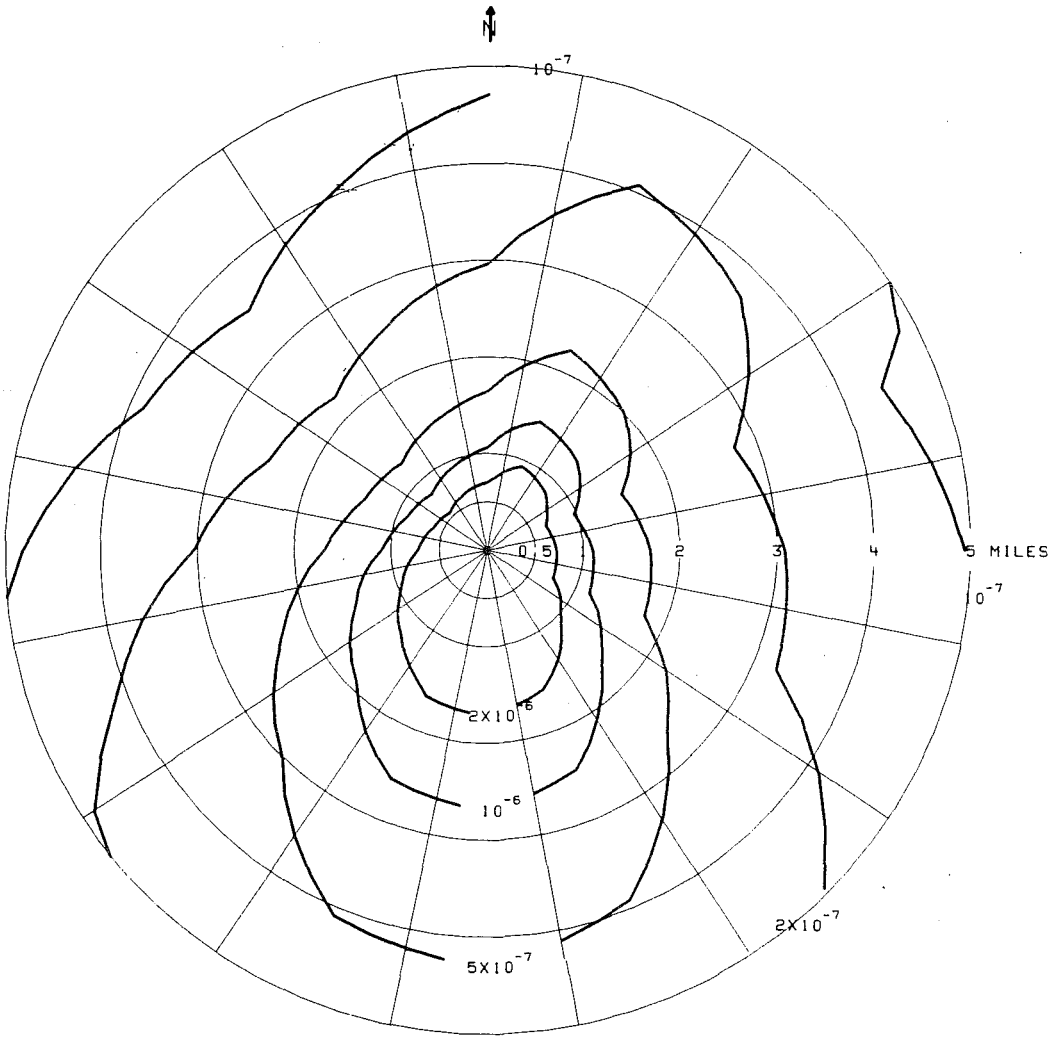


CONTOURS OF ANNUAL AVERAGE CHI/Q (SEC/METER CUBED)

LOFT

FIG. 3-18 CONTOURS OF ANNUAL AVERAGE CHI/Q (0-5 MILES).
(NOAA)

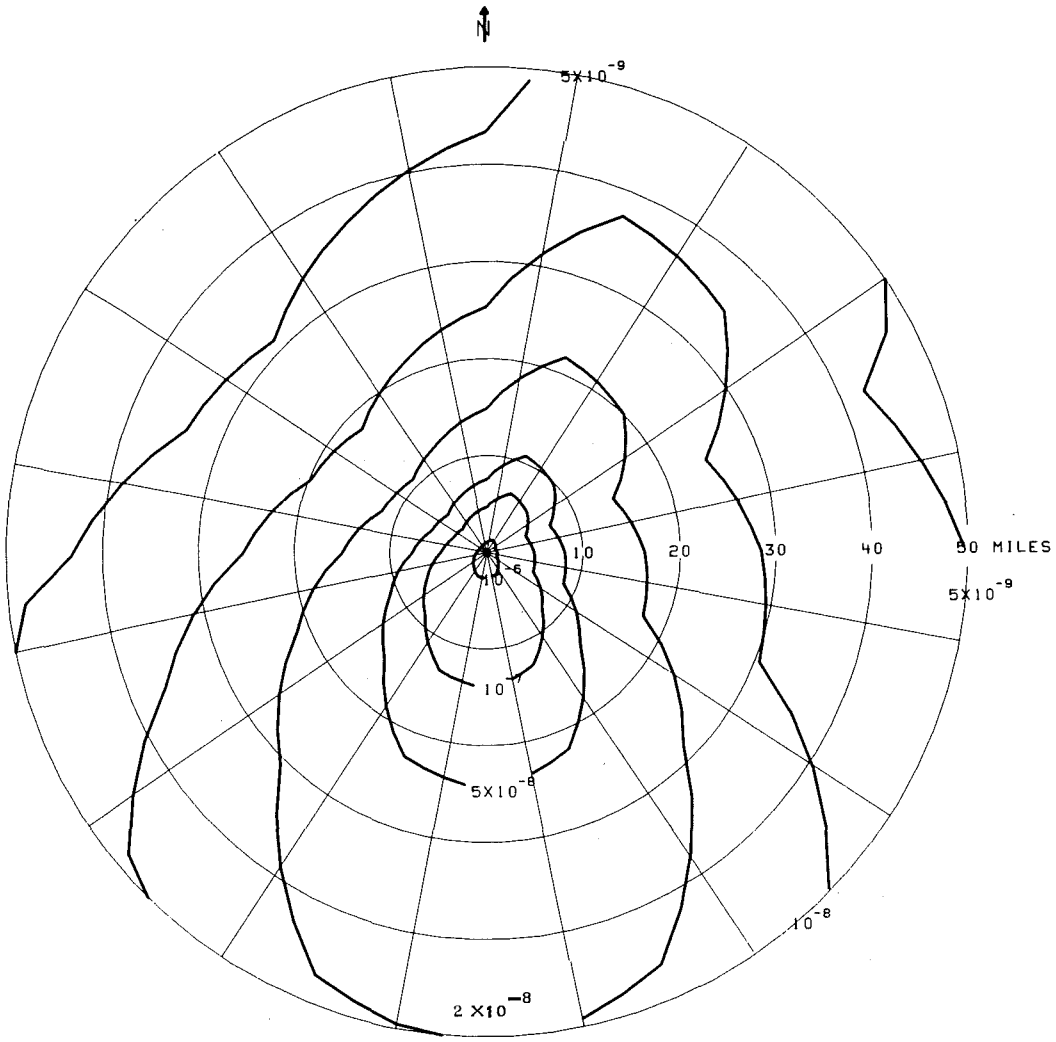


CONTOURS OF ANNUAL AVERAGE CHI/Q (SEC/METER CUBED)

LOFT

FIG. 3-19 CONTOURS OF ANNUAL AVERAGE CHI/Q (0-50 MILES). (NOAA)

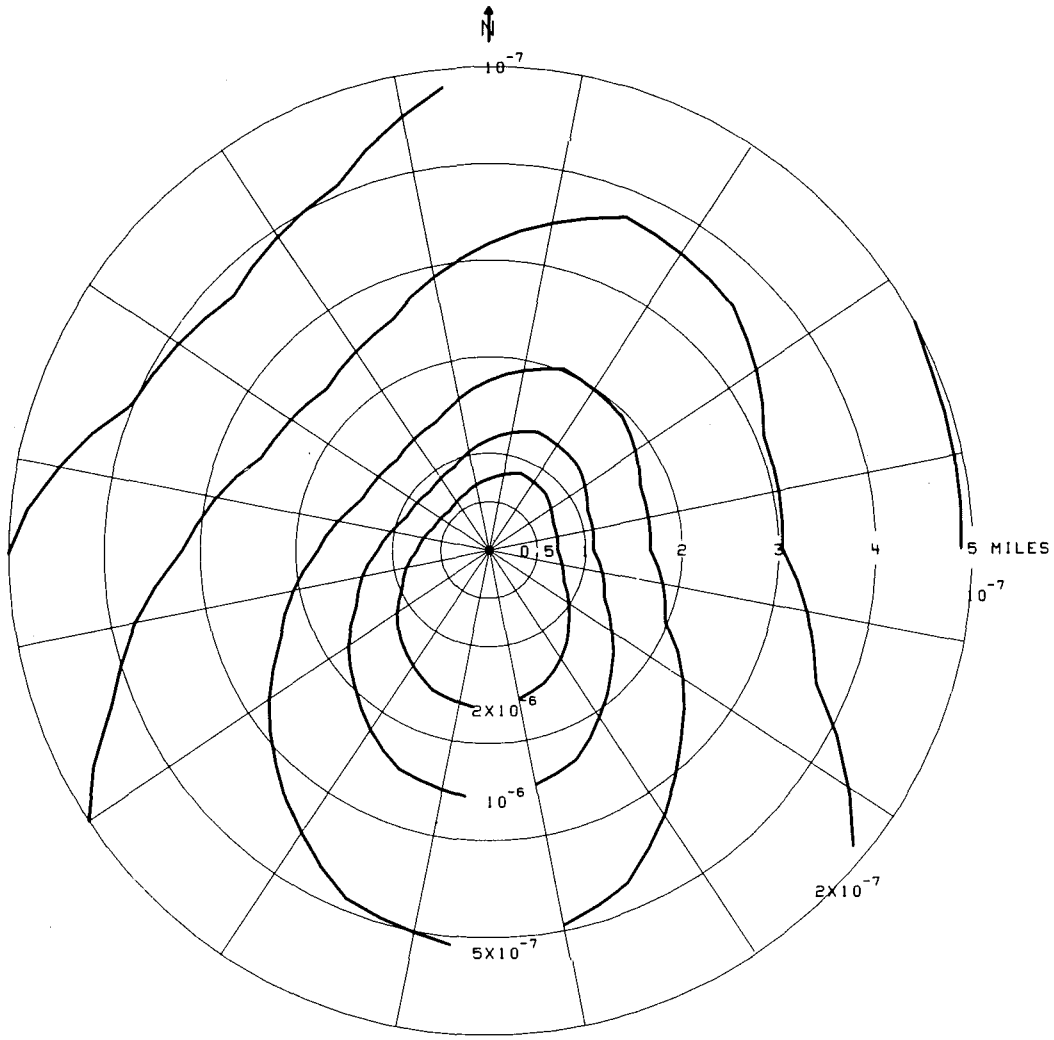


SMOOTHED CONTOURS OF ANNUAL AVERAGE CHI/Q (SEC/METER CUBED)

LOFT

FIG. 3-20 SMOOTHED CONTOURS OF ANNUAL AVERAGE CHI/Q (0-5 MILES).
(NOAA)

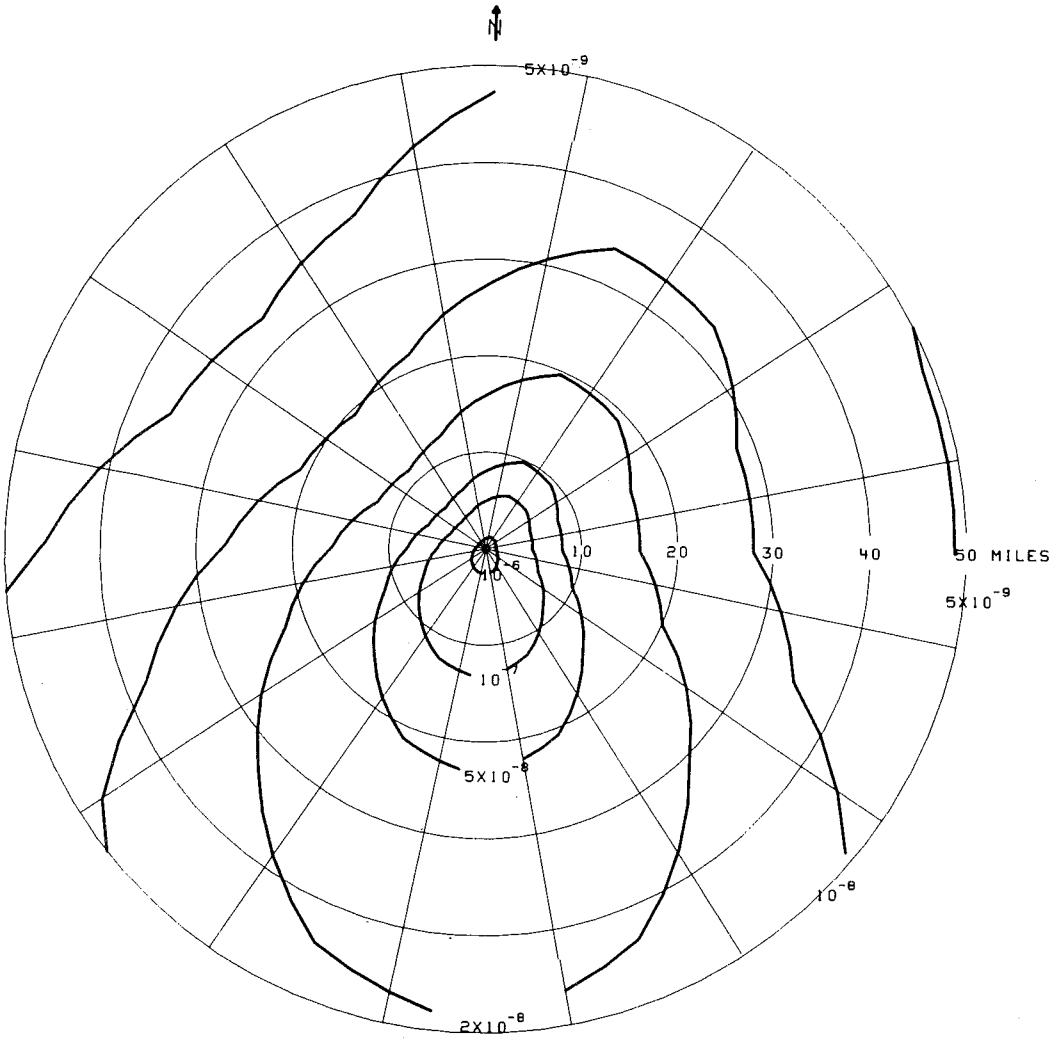


SMOOTHED CONTOURS OF ANNUAL AVERAGE CHI/Q (SEC/METER CUBED)

LOFT

FIG. 3-21 SMOOTHED CONTOURS OF ANNUAL AVERAGE CHI/Q (0-50 MILES).
(NOAA)

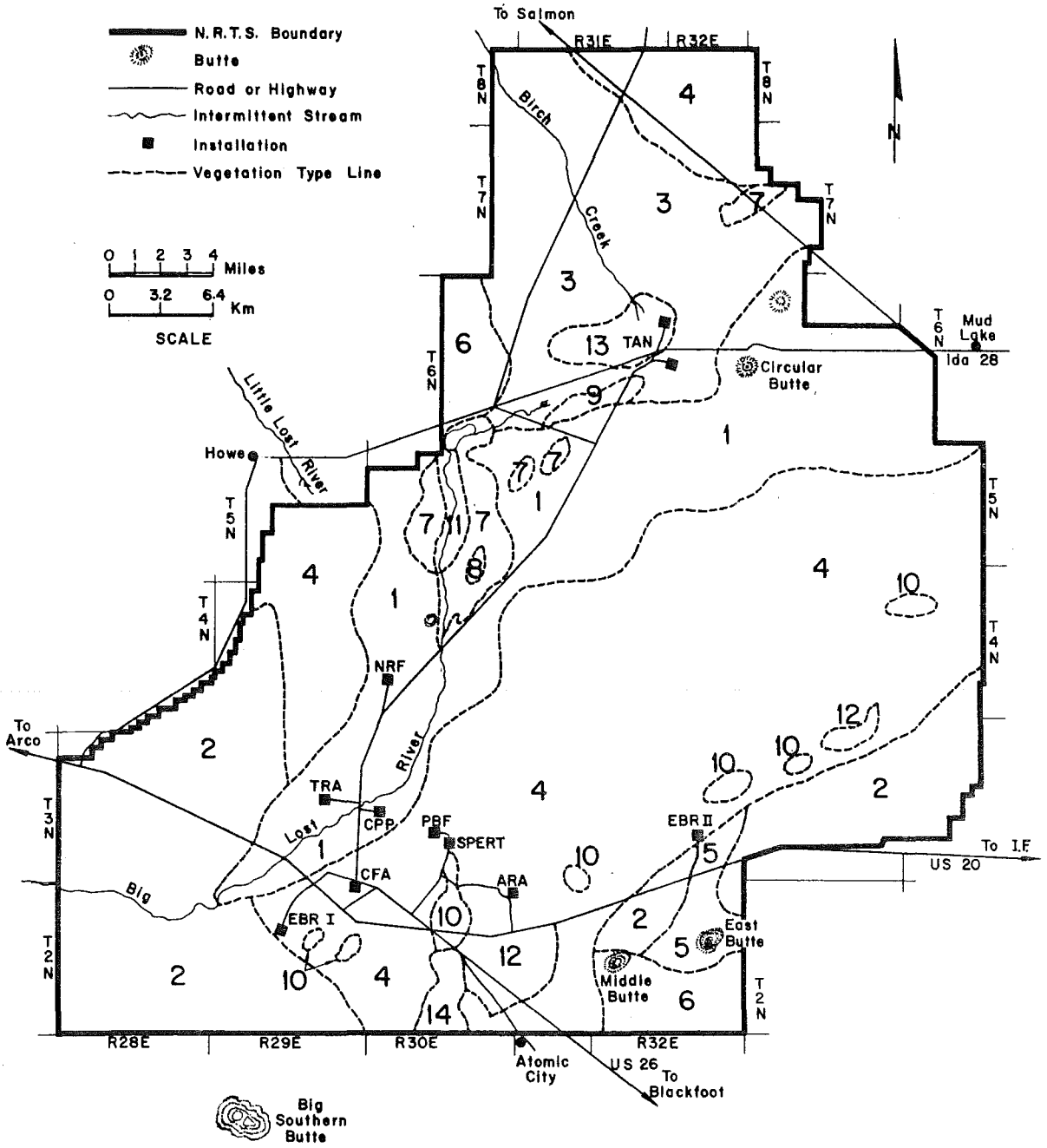


1 Artemisia tridentata/Agropyron dasystachyum
2 Artemisia tridentata/Agropyron spicatum
3 Artemisia tridentata/Eurotia lanata
4 Artemisia tridentata/Sitanion hystrix
5 Artemisia tripartita/Agropyron spicatum
6 Juniperus osteosperma/Agropyron spicatum
7 Eurotia lanata-Atriplex falcata
8 Atriplex falcata
9 Eurotia lanata
10 Elymus cinereus
11 Agropyron smithii
12 Agropyron desertorum
13 Playas
14 Recent lava flows

NOTE:

Adapted from "Vegetation Patterns of the National Reactor Testing Station, Southeastern Idaho" by Roy O. Harniss and Neil E. West, Department of Range Science, Utah State University.

ANC-D-882 (1967-1969)

FIG. 3-22 NRTS VEGETATION.

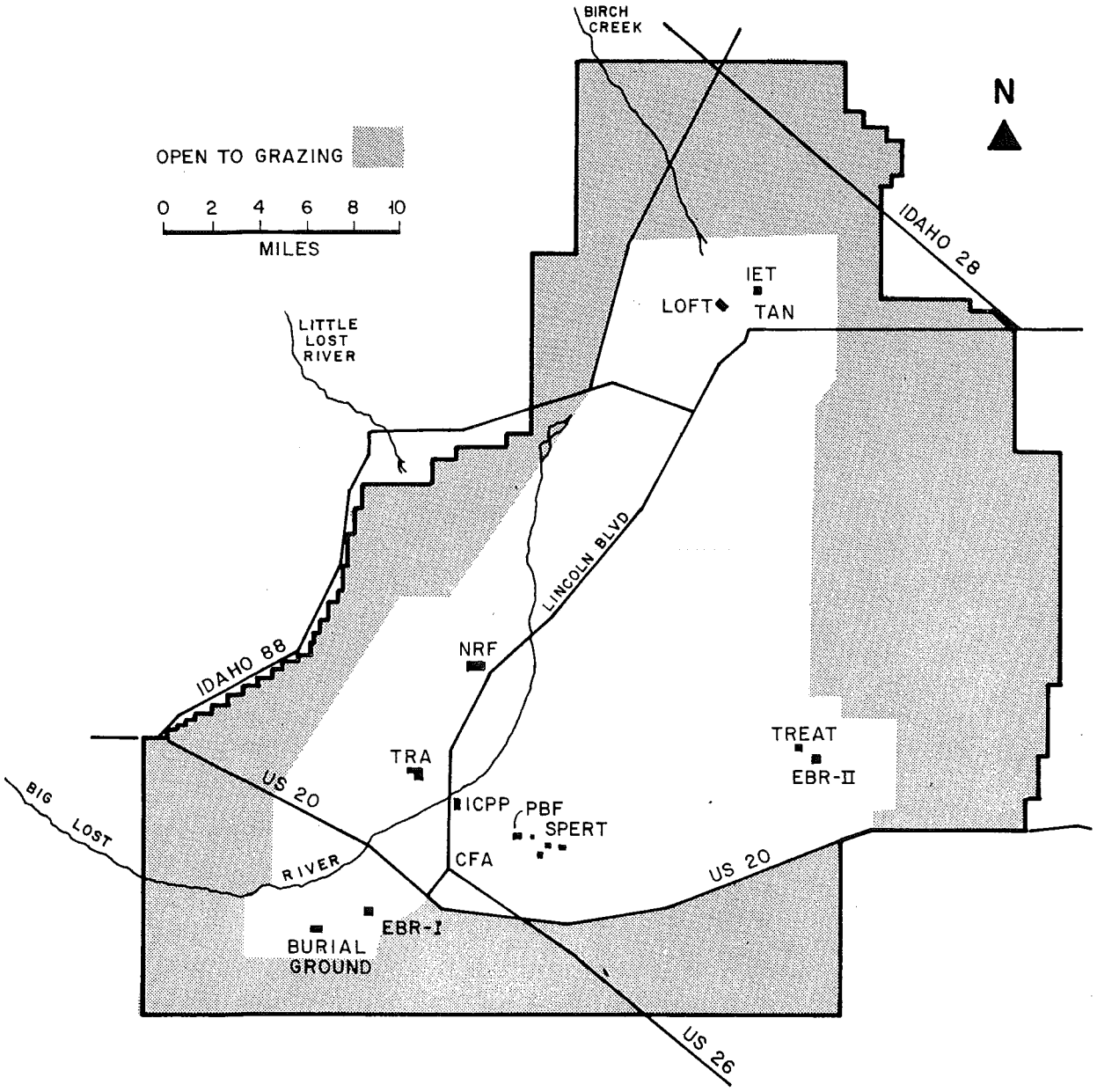


FIG. 3-23 NRTS OPEN GRAZING BY PERMIT.

0 10 20 Miles

PREPARED IN COOPERATION WITH THE STATE OF IDAHO DEPARTMENT OF RECLAMATION

EXPLANATION

Lands irrigated by surface-water diversions; outlined and designated as "groups" 1-14 and "areas" A-G, in reference to data in tables 1 and 2 respectively, in text

Lands irrigated by, or supplemented by, ground water pumped from wells

Approximate boundary between lands served by Idaho Power Company (south of line) and Utah Power and Light Company (north of line)

Approximate boundary of Snake Plain aquifer

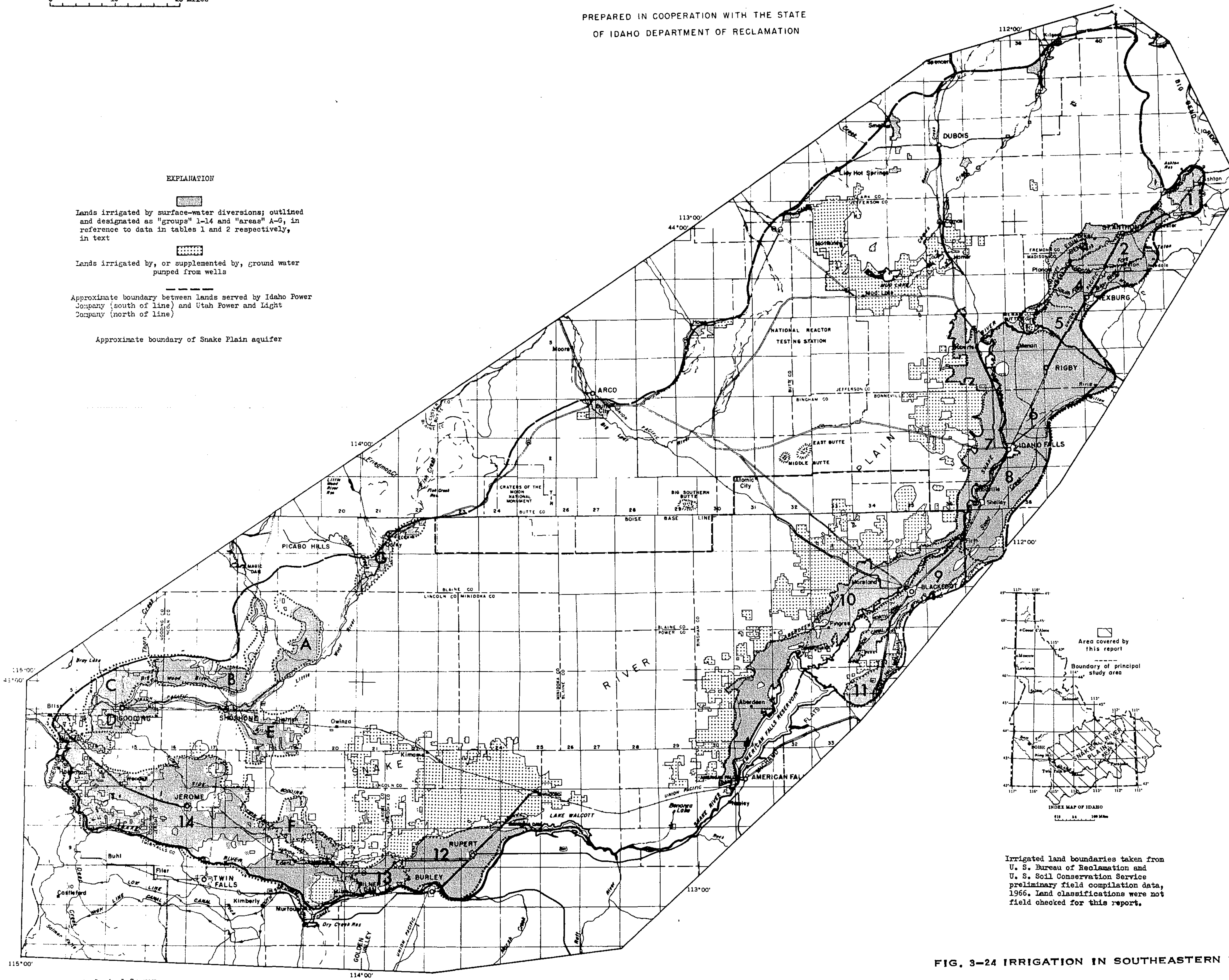


Irrigated land boundaries taken from U. S. Bureau of Reclamation and U. S. Soil Conservation Service preliminary field compilation data, 1966. Land classifications were not field checked for this report.

Base from U. S. Geological Survey

FIG. 3-24 IRRIGATION IN SOUTHEASTERN IDAHO. (USGS)

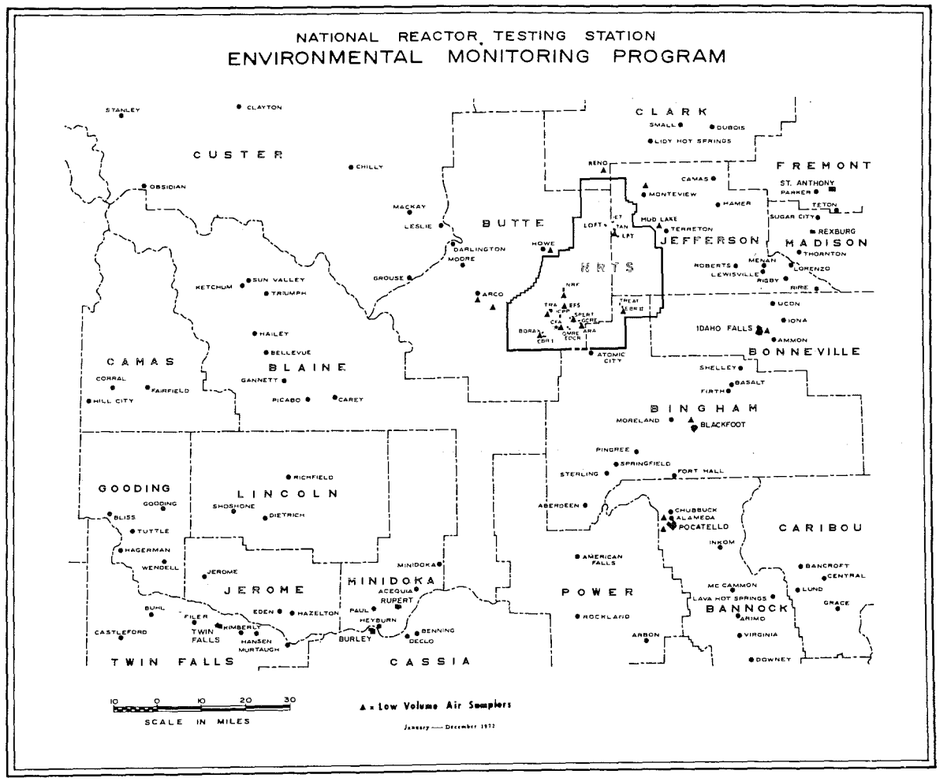


FIG. 3-25 ATMOSPHERIC ENVIRONMENTAL MONITORING, (AEC-ID-HSL)

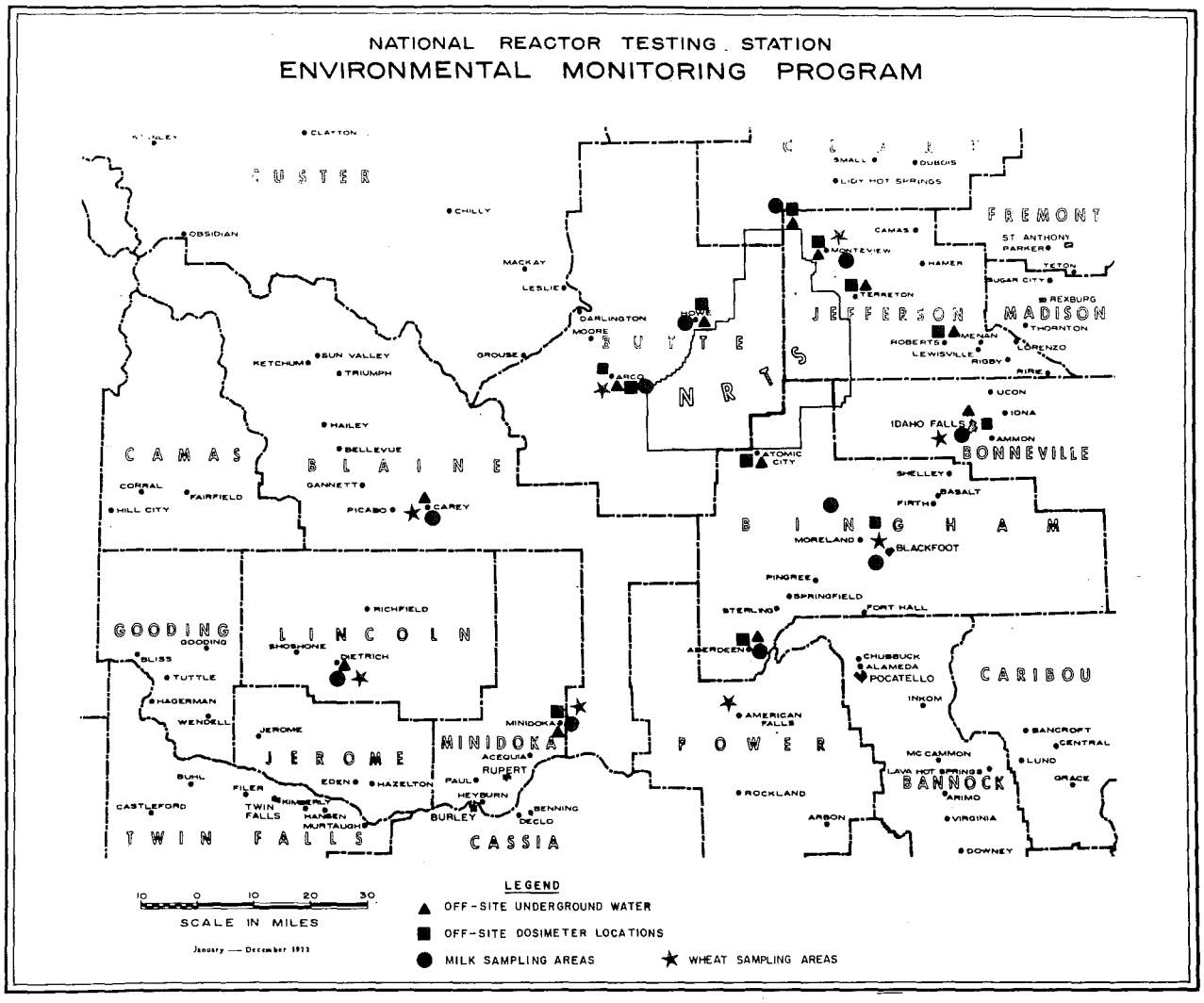


FIG. 3-26 OFFSITE ENVIRONMENTAL MONITORING.
(AEC-ID HSL)

APPENDIX 3-A

# TECTONIC MODEL, SEISMICITY AND VOLCANISM FOR THE EASTERN IDAHO REGION

Prepared By

Marvin R. Niccum, Geologist
Construction Engineering Division

February 22, 1973

Aerojet Nuclear Company

# TECTONIC MODEL, SEISMICITY AND VOLCANISM FOR THE EASTERN IDAHO REGION

## 1. INTRODUCTION

This appendix is included to give a brief review of some relevant geologic tectonic and seismic investigations. The active and inactive areas near the NRTS will be described and their impact on LOFT will be discussed.

The Intermountain West has been recognized as an area of geologically recent tectonic activity for some time. Early geological investigations were mineral oriented, it has only been since World War II that an appreciable amount of work has been done to define the tectonic history and possible continuing tectonic activity. Even though the available tectonic knowledge of the area has doubled every decade since World War II, much remains to be accomplished.

## 2. TECTONIC MODEL

The NRTS is located on the Snake River Plain in Southeastern Idaho. The physiography of the region is shown in Figure 3A-1. This figure can be used to describe the geologic provinces that affect the southeastern Idaho region. The basin and range province, which encompasses most of Nevada and Utah, ends at the southern edge of the Snake River Plain; this province is characterized by block faulted mountains which were constructed in late Tertiary to recent time(1). The Snake River Plain is a structural entity characterized by thicker crust(2) and cenozoic volcanism(1,3); it formed in mid Tertiary time(4). The mountains immediately north of the NRTS have "basin and range" structure but are separated from the basin and range province by the Snake River Plain.

Work by Stewart(5) and by others(6,7) indicates that tensional forces in the region are responsible for the geologically recent tectonic activity. Extension of the earth's crust in a general east-west direction has caused normal basin and range type faulting. The valley blocks drop down as wedges between the mountain blocks to accommodate lengthening in the crust; normal faults occur at the edge of valleys between the mountains.

Volcanism on the plain may be explained by the same regional forces. Barth(8) indicates that where fissures penetrate the earth's crust to the upper mantle, volcanism can occur. The rock at depth is hot enough to become molten but is maintained essentially as solid material by the lithostatic pressure of miles of overlaying rock. When an open fissure or rift propagates into this superheated zone, pressure is locally reduced and the rock liquifies to magma. The magma is forced upward to emerge as molten lava at the surface of the earth.

Wentworth and MacDonald(9) describe a geologic process along rift zones in Hawaii where the formation of volcanic rifts is accompanied by surface extension. The rifts open and are filled with basalt to heal the crack; therefore, the extended surface once again becomes solid rock. Rifts similar to those in Hawaii occur on the Snake River Plain at the Great Rift, Kings Bowl Rift and at many less spectacular volcanic vents.

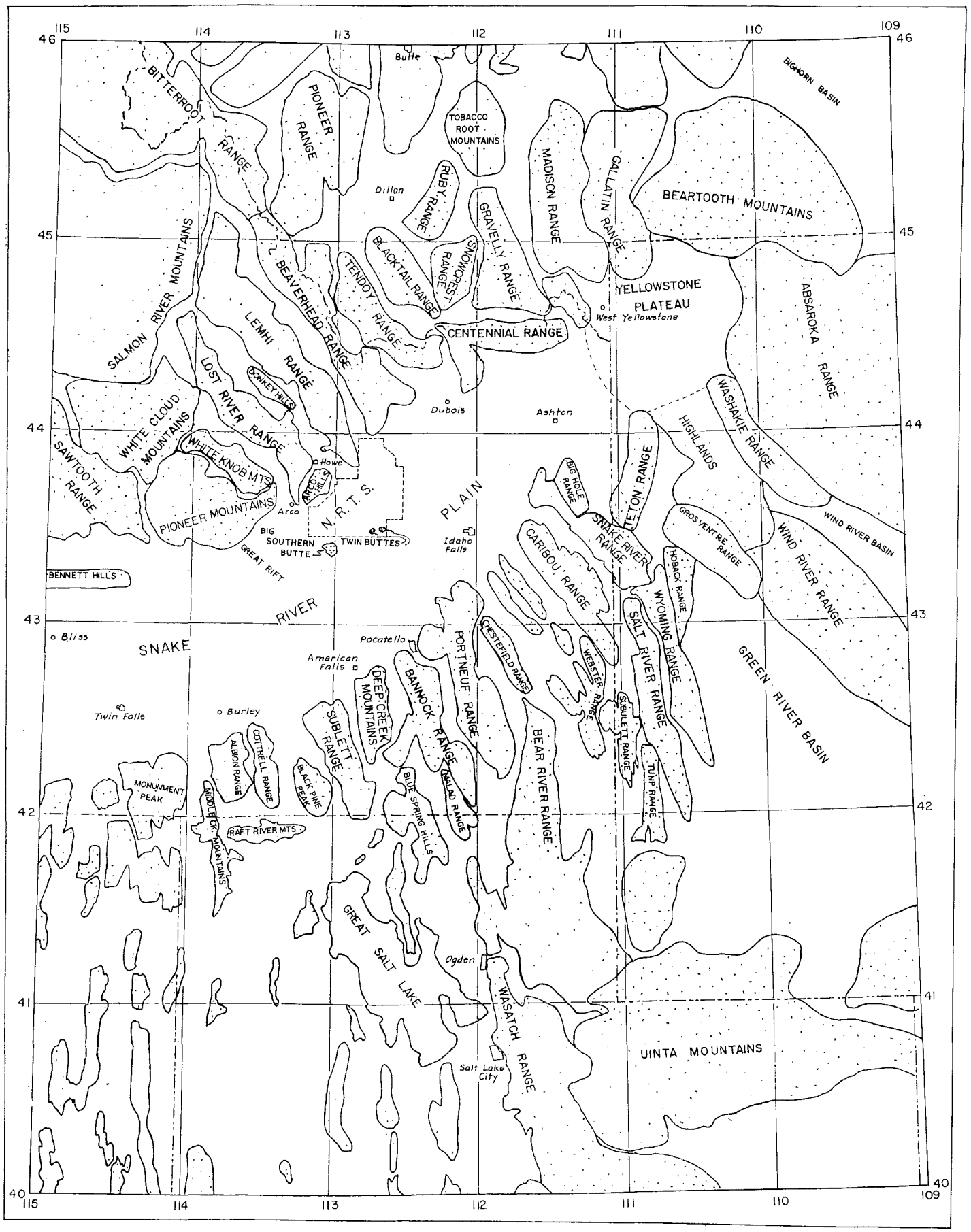


Figure 3A-1 - Regional Physiography

(72-25)

Geophysical studies indicate that the crust of the earth under the plain is about 42 to 49 KM thick while the crust under the adjacent basin and range mountains is only about 25 to 36 KM thick[2]. Mabey believes that the Snake River Plain is at or near isostatic equilibrium while the surrounding mountainous regions are unstable[10]. Thus, the mountains fall in one geologic province and the Snake River Plain falls in another.

The writer feels that the same regional forces are present in both provinces but the reactions are different. In the mountains, extension is compensated by vertical movement between mountains and the wedge-like valley blocks (horsts and grabens). As the distance between adjacent mountain blocks increases, the valleys are dropped downward relative to the adjacent mountains[5]. On the Snake River Plain, extension is concentrated in rifts that open up a few feet wide, a few miles long and a few tens of miles deep. Since the crust here is thicker and more stable, there is no differential movement across the rifts. The rifts open and propagate down into the upper mantle to allow magma to form. Molten rock flows upward to eventually weld the rift closed leaving solid rock in the extended crust and on the surface.

Thus the writer assumes that the same regional tectonic forces that cause faulting and earthquakes in the mountains are responsible for rifting and volcanism on the plain. It should be noted that this is only a preliminary working hypothesis. Much remains to be learned about the tectonic processes at work on and around the Snake River Plain; however, the tensional rifts, volcanism and lack of normal faults on the basalt surface of the eastern plain support the theory.

## 3. KNOWN FAULTS AND EARTHQUAKES

Bonilla and Chase recognized scarps in the mountains north of the NRTS which they felt were on the trace of active faults[11]. Malde later investigated these scarps and determined there had been several periods of movement ranging from 4 to 30 thousand years Before Present (B.P.). He felt that the various fault movements could have generated magnitude 7 earthquakes[12].

The Earthquake Epicenter Map, Figure 3A-2, is based on the recorded seismicity in the period between 1925 and 1971 as compiled in the National Ocean Survey Hypocenter Data File. The map was drawn and epicenters were plotted by the staff of Woodward-Lundgren & Associates under the direction of Lloyd Cluff. The data was provided by the National Ocean Survey.

The Fault and Earthquake Epicenter Map, Figure 3A-3, shows the outline of plotted epicenter clusters from Figure 3A-2 overlain on a map of known faults in the same region. This map was prepared to demonstrate the relationship between historic earthquakes and known faults. Most faults are essentially as shown on the Tectonic Map of the Western United States. Some additional faults, which have been recently reported in the literature, have been added near the NRTS.

Figure 3A-3 shows the epicenters are clustered into distinct seismic areas from form an inverted northeast-trending "U" around the Snake River Plain. The nearest seismic areas are about 50 to 60 miles from the NRTS. Most of the epicenters are found in areas of known faults.

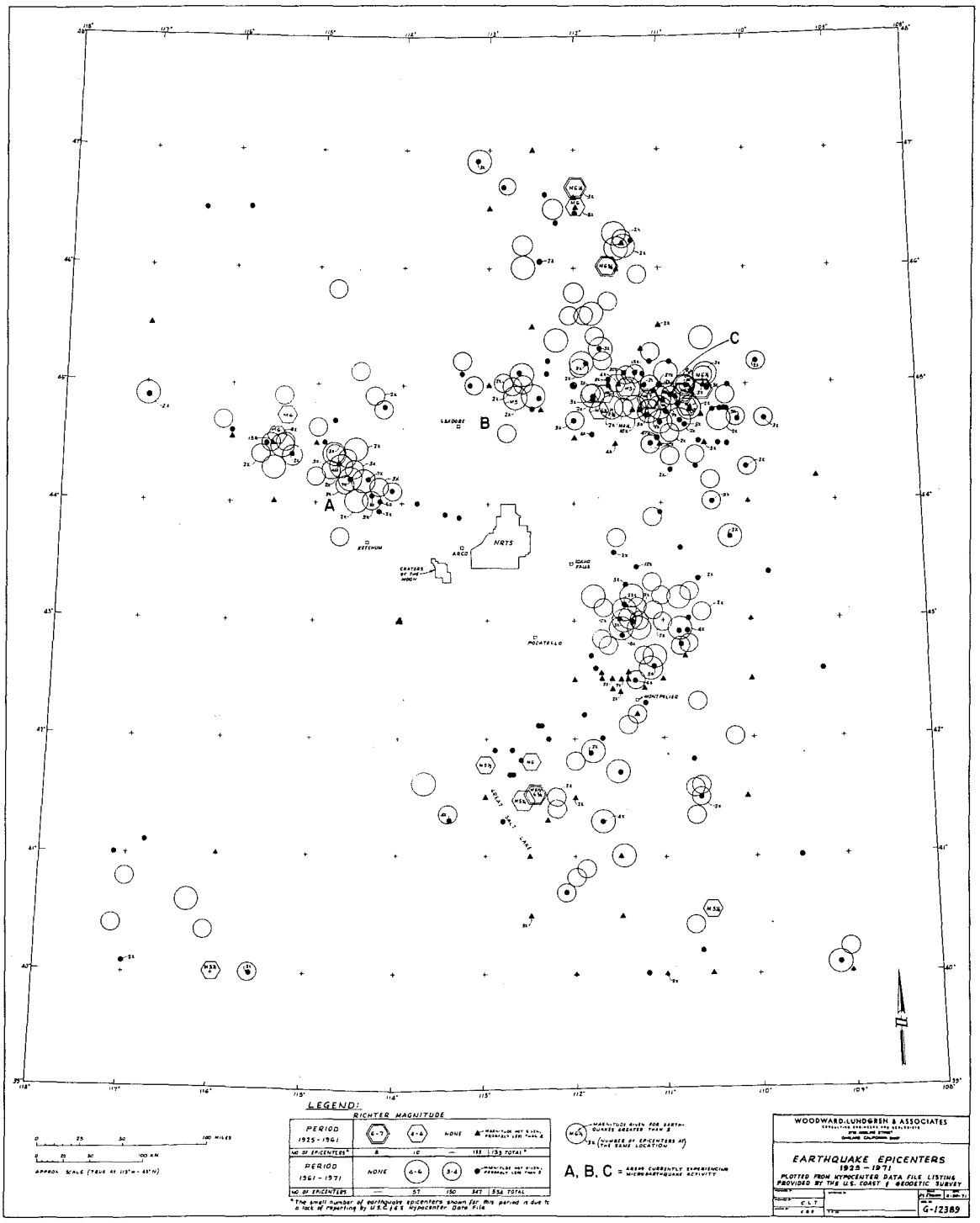


Figure 3A-2 - Earthquake Epicenter Map

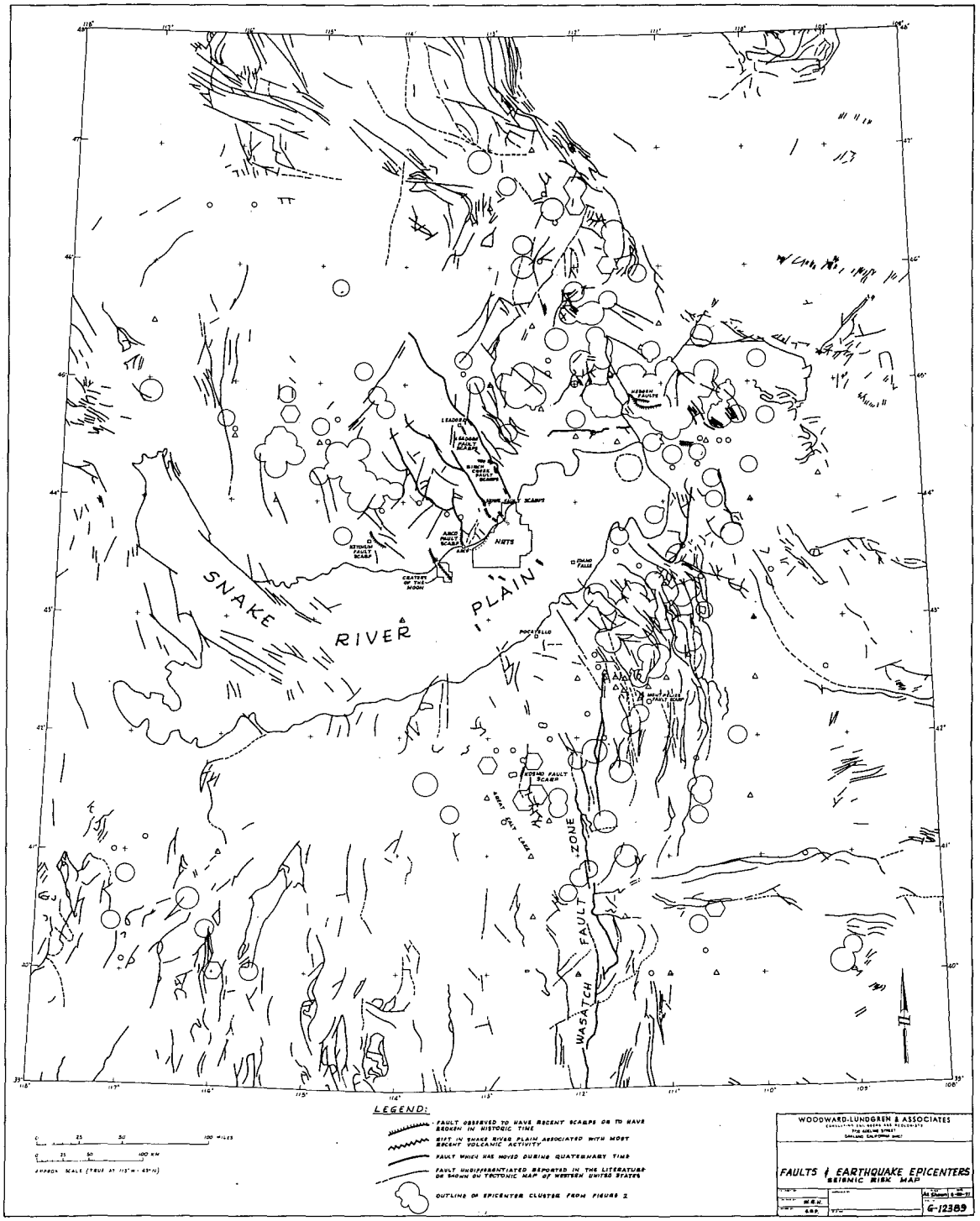


Figure 3A-3 - Faults and Earthquakes

Figure 3A-2 indicates that in 46 years of instrumental record, several hundred earthquakes ranging from the lower detection limit to 7.1 magnitude have occurred in the mountains around the Eastern Snake River Plain. In this period only one earthquake has been plotted on the plain. This quake occurred early in the record when the locations had an accuracy of about ± 50 KM in this region; therefore, the location of this one small quake most probably was in the mountains near the other recorded activity.

The youngest faults reported on the eastern plain were found by Carr and Trimble[13]. These faults parallel the border of the plain and cut all formations older than middle to upper Pleistocene; the younger formations were not affected. Thus the faults are about a million years old and are probably older. Small normal faults in Pliocene rhyolite were found at the southern end of the Lemhi Range dipping under alluvium[14]. Later a seismic profile west of TAN showed a continuation of what appeared to be one of the same faults in Pliocene rhyolite but not in the overlying Pleistocene basalt[15]. There has been no evidence of surface faulting reported from the Snake River basalt on the NRTS or on the eastern Snake River Plain.

The closest major earthquake was the Hebgen Lake event of August, 1959. The fault break that caused that earthquake was over 100 miles from the NRTS. The vibratory motion was felt by some persons working at the NRTS but caused no damage.

## 4. MICROSEISMS AND CURRENT TECTONIC ACTIVITY

Fault movements that generate destructive earthquakes are a strain release mechanism. They occur when accumulated strain exceeds the strength of the local geologic structures and formations. The accumulation of strain is accompanied by small adjustments in the earth which gives rise to microseisms. Thus microseisms can be used, with other information, to study strain accumulations, strain release and other parameters of a regions Tectonic activity[6,7,16 & 17].

On the basis of the regional geology, seismicity and microseismic studies, Sbar et. al defined the Intermountain Seismic Zone[6]. It stretches from Southern Nevada across Utah to the Wasatch Front; it then follows the Idaho-Wyoming border northward to Yellowstone Park and continues into Montana. The epicenters shown on Figure 3A-2 and Figure 3A-3 are in the Intermountain Seismic Belt.

In 1969 a study was made by A. M. Pitt and J. P. Eaton to monitor microseisms and current Tectonic activity near the NRTS[12]. They found activity north of the plain at locations marked A, B, and C on Figure 3A-2. The nearest microseism was about 70 km from the NRTS near Leadore, Idaho.

The AEC Health Services Lab started monitoring microseisms in December, 1971 with one vertical seismometer located near CFA (Station LRI). Two more stations were installed in October, 1972 at Taylor Mountain southeast of the plain (TMI) and on Howe Peak northwest of the plain (HPI). An essentially complete record of microseisms from the area around the Snake River Plain is available from the later part of November, 1972.

Microseisms monitored at the three stations are recorded at CFA on time-synchronized drums. It is possible to read the arrival times to fractions of a second. The distance from each station to recorded events can be computed from S-P arrival times[a]. The epicenter of the event can be located by resection.

The preliminary data reduction (through January, 1973) agrees with past information. The present Tectonic activity is confined to the mountains around the plain. The nearest epicenter recorded is over 70 km from the NRTS in the Tendoy Mountains.

## 5. RELATIONSHIP OF THE INTERMOUNTAIN SEISMIC ZONE TO THE UNIFORM BUILDING CODE ZONE 3

In the early 1960 decade, the Vela Uniform seismograph network was put into operation. After this, a great many more earthquakes were detected in Montana, central Idaho, along the Idaho-Wyoming border and along the Wasatch front in Utah (Figure 3A-2). This change can be attributed to more sensitive instrumentation rather than to any basic change in tectonic activity. This increase in recorded activity coupled with known damaging earthquakes in Utah and Montana apparently lead to a revision in earthquake zoning.

In 1970 an area in Montana, Idaho, and Utah was changed from Seismic Risk Zone 2 (Figure 3A-4) to Seismic Risk Zone 3 (Figure 3A-5). The elongate zone runs south from the Helena and Hebgen Lake earthquake areas in Montana to the Kosmo scarp and Wasatch front earthquake areas in Utah. Later work that defined the Intermountain Seismic Zone[6] indicates that the Building Code Zone 3 [18], shown on Figure 3A-5, only approximates the current seismic activity in the Intermountain Seismic Zone. The Building Code Zone 3 is anchored in areas of known earthquakes at both ends; but in between, it cuts straight across the Snake River Plain to include the NRTS. The active seismic area curves eastward around the plain away from the NRTS (Figures 3A-2 and 3A-3).

## 6. VOLCANISM

Field reconnaisance and study of aerial photographs indicates that the basalts of the eastern plain have been emplaced as relatively small flows from many vents (19). The individual flows cover from one or two square miles to a few townships. There is no overall pattern to the location of vents; however, they are generally more numerous along the centeral axis of the plain (20).

The most recent activity on the eastern Snake River Plain has been at the Craters of the Moon, Kings Bowl Rift (21) and near Big Southern Butte (19).

Circular Butte, about 4 miles east of LOFT, is the nearest volcanic vent. Judging from the degree of surface weathering and soil cover, Circular Butte is at least an order of magnitude older than the most recent activity. The last flows at the Craters are believed to be from 5 to 30 thousand years old. A carbon-14 date from buried sagebrush indicates that the Kings Bowl Basalt may be as young as 2,000 years B.P. (22).

---

(a) S-P refers to the difference in arrival time between Shear and Compressional Waves. The P waves (compressional) have a higher velocity. The time between S and P wave arrival time is a function of distance.

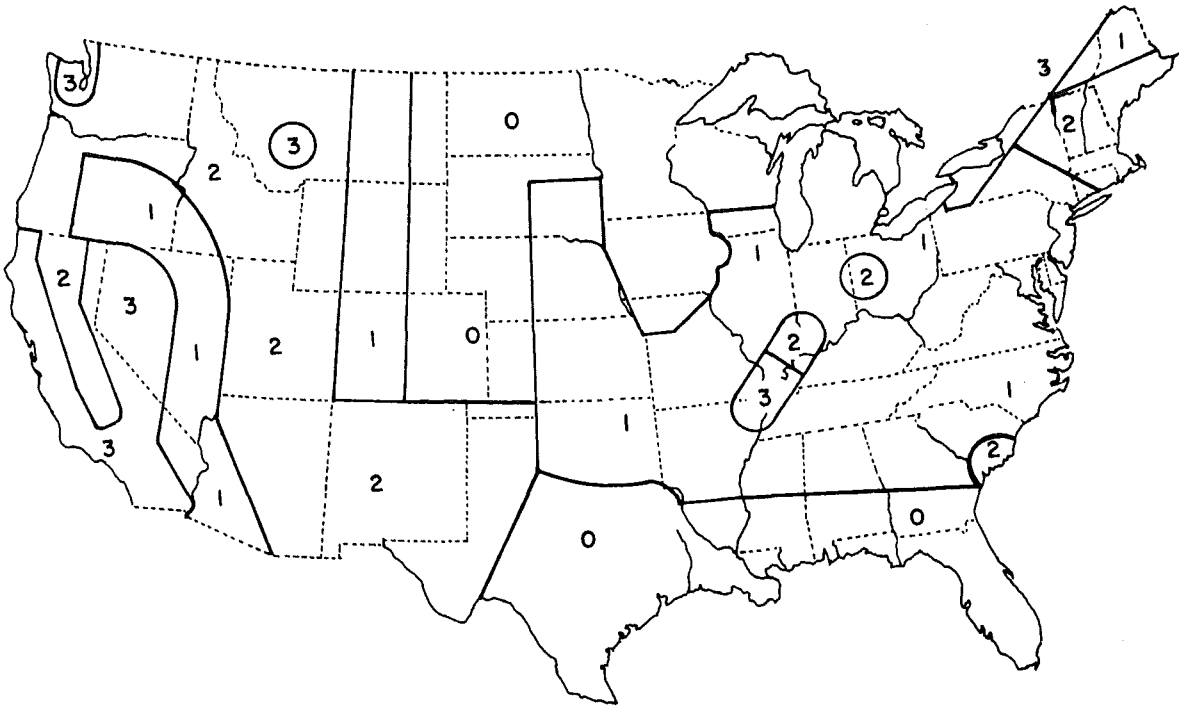

Figure 3A-4 - Seismic Risk Zones From 1949-1970.
(Seismic Zoning in Effect During Initial LOFT Design)
(73-761)

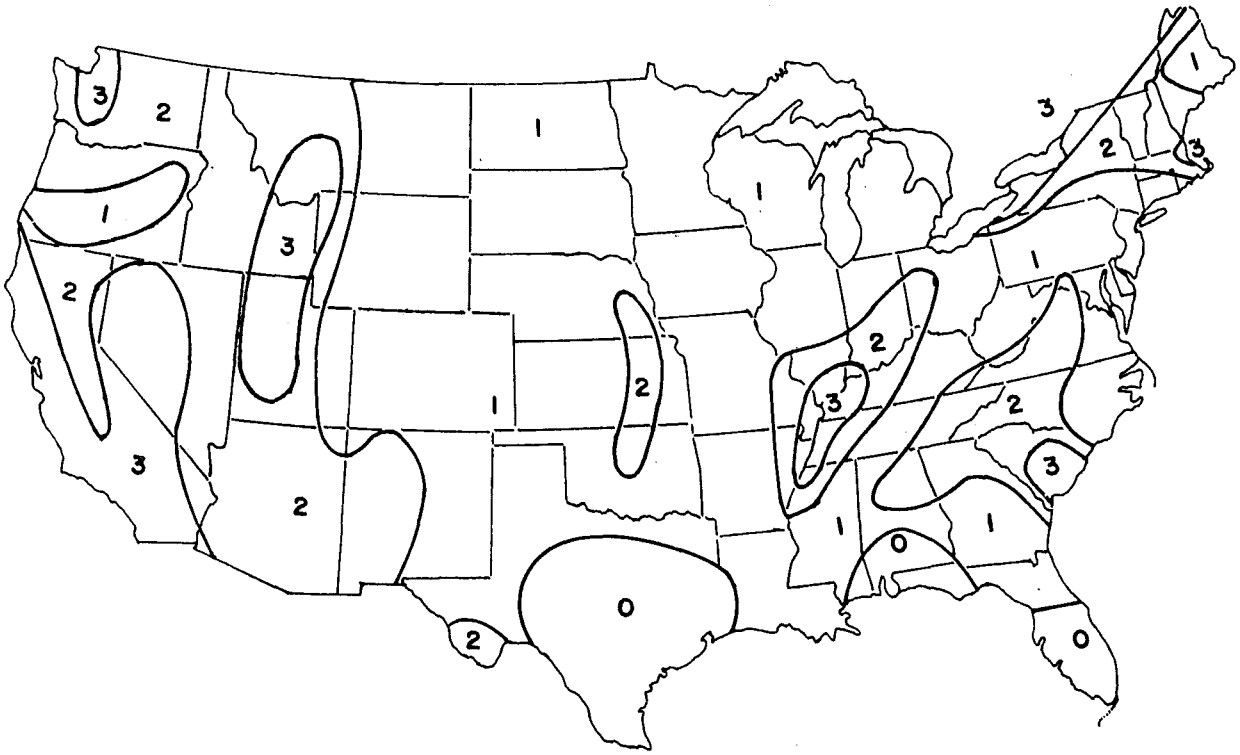

Figure 3A-5 - Uniform Building Code - Seismic
Risk Zones in Effect from 1970 to Present
(73-672)

Studies in Hawaii and elsewhere indicate that the onset of volcanic activity is preceeded by microseisms and small earthquakes. The tell-tale seismic activity is caused by crustal adjustments inherent in the opening of the rifts or fissures and swelling caused by the upward movement of molten magma. Some seismic indication of coming eruptions have been found as much as five years before an eruption (23).

The amount of seismic activity increases as the time for eruption grows near. Thus it is possible to predict the onset of volcanism and the probable location of the vents months or years before an eruption.

The type and frequency of seismic events gives an indication as to whether the possible eruption is months away or if an eruption is imminent.

It appears that the past eruptions on the Snake River Plain have been separated in time by hundreds or thousands of years. Using the doctrine of uniformitarianism we would assume that the next eruption, if any, would not occur for a period of at least several hundred, or more probably several thousand years; it would probably occur near the center of the plain several tens of miles from LOFT. The present seismograph system operated by the Health Services Lab, would give months of warning before a recurrence of volcanism. Therefore, we would not expect a volcanic eruption to propogate a radiation incident.

## 7. DISCUSSION, COMMENTS, AND CONCLUSIONS

The current Tectonic activity for the region surrounding the Snake River Plain has been fairly well defined in the last decade. Studies, earthquake monitoring and investigation now planned or underway by the USGS and by others will probably add more detail in the coming years but should not lead to major revisions in the conclusions of this analysis.

Based on earthquakes recorded by the National Ocean Survey and microseisms recorded by other investigators, the Intermountain Seismic Zone near Yellowstone is the most active element in the region. A second active area is centered in an area in east central Idaho near Ketchum, Stanley and Clayton.

The absence of historic earthquakes, current microseismic activity, or faulting in recent geologic time indicates the Snake River Plain is presently aseismic. Thus we would not expect faulting or earthquakes to originate on the plain; therefore, we can rule out any probability of a fault break occurring in the LOFT area. Seismic shaking could occur at LOFT but it would be transmitted from earthquakes that occur in the mountains around the Snake River Plain.

The Howe and Arco scarps must be considered active, by definition, even though this is not born out by studies of current Tectonic activity. Since these two scarps are defined as active faults and are the closest potentially active elements, they were used as the locus for earthquakes in LOFT seismic design analysis. The maximum credible event by definition, would be an earthquake on one of these two scarps. Realistically the most probable earthquake would occur further away in one of the currently active areas shown on Figures 3A-2 and 3A-3.

It appears that the seismic risk analysis of LOFT is sufficiently conservative considering the regional information which has been developed since the building code zone change was made in 1970.

1. The most active seismic area is over 100 miles to the east; a secondary zone of activity is almost that far away to the north and west. There are good reasons for classifying these two areas Seismic Risk Zone 3; however, the reasons for placing the area between the two active zones in Zone 3, are quite tenuous.

2. The seismic design analysis was made using nearby faults which are defined as active. The current monitoring gives no indication of strain accumulation on these faults; therefore, except by definition, they are presently dormant. They must be considered potentially active in safety, review and analysis; however, any potential threat from these faults should be signaled by a return of detectable microseism activity months or years in advance of a potential earthquake.

3. There is no field or seismic evidence of active faults closer to LOFT than the Howe scarp which was used in seismic design analysis.

4. A realistic approach for locating the maximum credible earthquake would be to use the current seismic activity. Using this basis, the design earthquake would be placed further away and the design accelerations at LOFT would be lower than those which are now being used.

There is a possibility of renewed volcanism on the Snake River Plain; however, the current patterns of tectonic activity give no reason to expect renewed volcanism to occur during the design life of any facility or programs now operating on the NRTS (including LOFT). The current microseism monitoring program would give adequate warning before possible renewed volcanic outbursts and would generally define the area which would be affected. The warning should provide time to make any program changes or institute safety procedures necessary to avert a radioactivity incident.

## REFERENCES CITED


1. Warren Hamilton and W. B. Meyers, "Cenozoic Tectonics of the Western United States", Review of Geophysics, Vol. 4, (1966), pp. 509-549.

2. D. P. Hill, "Gravity and Crustal Structure in the Western Snake River Plain, Idaho", Journal of Geophy. Research Vol. 68, No. 20, (1963), pp. 5807-5818.

3. D. P. Hill, H. L. Baldwin Jr., and L. C. Pakiser, Gravity Volcanism and Crustal Deformation in the Snake River Plain, Idaho. U. S. Geol. Survey Professional Paper 424-B, p. B248 - B250 (1961).

4. D. I. Axelrod, "Tertiary Floras and Topographic History of the Snake River Basin, Idaho", Geol. Soc. America Bull. Vol. 79, (June 1968), pp. 713-734.

5. J. H. Stewart, "Basin and Range Structure: A System of Horsts and Grabens Produced by Deep-Sealed Extension". Geol. Soc. Am. Bull. Vol. 82, (April 1971), pp. 1019-1044.

6. M. L. Sbar, M. Barazangi, (Abs), "Tectonics of the Intermountain Seismic Belt, Western United States", Geol. Soc. Am. Abstracts with Programs Vol. 2, No. 7, (1970).

7. F. J. Gumper and C. H. Scholz, "Microseismicity and Tectonics of the Nevada Seismic Zone". Bull. Seismol. Soc. Am. Vol. 61, No. 5, (October 1971), pp. 1413-1432.

8. T. F. W. Barth, Theoretical Petrology, New York, John Wiley and Sons, 1962.

9. C. K. Wentworth and G. A. MacDonald, Structures and Forms of Basaltic Rocks in Hawaii. U. S. Geol. Survey Bull. 994, (1953), pp. 11-14 and 89-91.

10. D. R. Mabey, Relation Between Bouger Gravity Anomalies and Regional Topography in Nevada and the Eastern Snake River Plain, Idaho. U. S. Geol. Survey Professional Paper 550-B, pp. B108-B110.

11. M. G. Bonilla and G. H. Chase, Preliminary Investigation for Faulting and Earthquakes at the National Reactor Testing Station, Idaho. (Unpublished report, not in open files) January 1968, U. S. Geological Survey.

12. H. E. Malde, Geologic Investigation of Faulting Near the National Reactor Testing Station, Idaho, U. S. Geol. Survey Open File Report, (1971).

13. W. J. Carr and D. E. Trimble, Geology of the American Falls Quadrangle, Idaho. U. S. Geol. Survey Bull. 1121-G, (1963), pp. G36-G37.

14. P. J. Shannon, Jr., Geology of the Howe Peak Area. (Unpublished Thesis), Northwestern University, (1960).

15. J. O. Parr, Final Report on Feasibility of Seismic Techniques for Determining and Mapping Subsurface Sturcture and Depth to Sub-Basaltic Rocks, Snake River Plain, NRTS. (Unpublished, not in open files) June 24, 1964, Petty Geophysical Co.

16. Robert E. Wallace, Earthquake Recurrence Intervals on the San Andreas Fault. Geol. Soc. America Bull. Vol. 81, pp. 2875-2890 (October, 1970).

17. L. C. Pakiser, J. P. Eaton and C. B. Raleigh, Earthquake Prediction and Control. Science Vol. 166 No. 3912, pp. 1467-1474 (December, 1969).

18. International Conference of Building Officials, Volume I, Uniform Building Code, pp. 123, Pasadena, California (1970).

19. M. R. Niccum, Geology and Permeable Structures of Basalts on the East Central Snake River Plain Near Atomic City, Idaho. (Unpublished Thesis). Idaho State University.

20. E. H. Walker, Subsurface Geology of the National Reactor Testing Station, Idaho, U. S. Geol. Survey Bull. 1133-B (1964).

21. Martin Prinz, "Kings Bowl Rift, Idaho", Geotimes Vol. 12, No. 2, (1967), pp. 23-25.

22. E. A. Olsen, Whitworth College, Private Communication to J. L. Papadarkis, Crystal Ice Caves and Earl Swanson, Idaho State University, (July 9, 1968).

23. G. A. MacDonald and J. P. Eton, Hawaiian Volcanoes in 1955. U. S. Geol. Survey Bull 1171, (1964), 170p.

APPENDIX 3-B

# DISCUSSION OF POTENTIAL FLOOD PROBLEMS IN CONJUNCTION WITH THE LOFT PROGRAM

Prepared By

Marvin R. Niccum, Geologist
Construction Engineering Division

March 23, 1973

Aerojet Nuclear Company
550 Second Street
Idaho Falls, Idaho

TABLE OF CONTENTS


Page

1. INTRODUCTION . . . . . 3-79

1.1 General Statement . . . . . 3-79

1.2 Flood Prediction and Evaluation . . . . . 3-79

1.3 Scope of This Appendix . . . . . 3-81

2. BASIN MODEL. . . . . 3-82

2.1 General Description . . . . . 3-82

2.2 Geology . . . . . 3-82

2.3 Climate . . . . . 3-84

2.4 Runoff, Infiltration, and Natural Regulation in the Three Mountain Basins . . . . . 3-84

2.4.1 General Conditions . . . . . 3-84

2.4.2 Birch Creek Basin . . . . . 3-85

2.4.3 Little Lost River Basin . . . . . 3-85

2.4.4 Big Lost River Basin . . . . . 3-86

2.5 Recent Flood History . . . . . 3-86

2.5.1 Flooding in February, 1962 . . . . . 3-86

2.5.2 Flooding in December, 1964 . . . . . 3-87

2.5.3 Flooding in 1965 . . . . . 3-87

2.5.4 Flooding in 1969 . . . . . 3-88

3. POSSIBLE FLOODS AND FLOOD PROTECTION . . . . . 3-90

3.1 Flood Protection at LOFT . . . . . 3-90

3.2 Lost River Basin . . . . . 3-92

3.3 Little Lost River Basin . . . . . 3-92

3.4 Birch Creek . . . . . 3-93

3.5 Predicted Maximum Precipitation (PMP) Storms . . . . . 3-95

TABLE OF CONTENTS (Cont'd)


| | | Page |
|---|---|---|
| 4. | CONCLUSIONS | 3-96 |
| 5. | REFERENCES CITED | 3-97 |


FIGURES


| No. | Description | Page |
|---|---|---|
| 3B-1 | Drainage Basins Affecting the NRTS | 3-80 |
| 3B-2 | Lost River Profile and Sections | 3-83 |
| 3B-3 | Storage Capacity of the Birch Creek Playa | 3-91 |


TABLES


| | | |
|---|---|---|
| 3B-1 | Lower Birch Creek Basin | 3-94 |

DISCUSSION OF POTENTIAL FLOOD PROBLEMS
IN CONJUNCTION WITH THE LOFT PROGRAM

# 1. INTRODUCTION

## 1.1 General Statement

The LOFT facilities are located in and near the Test Area North (TAN) Area in the Pioneer Basin[1]. The Pioneer Basin is a closed topographic depression on the Snake River Plain that receives intermittent runoff from the Lost River, Little Lost River, and Birch Creek Basins in the mountains to the north (Figure 3B-1).

The streamflow records for the area are limited. Some observations, extending into the last century have been recorded, but in general, stream gauging stations were not operated until the early 1900's[2].

The stream gauging stations in the basins were relocated from time to time or were operated intermittently so there are no stations with continuous readings over the period of record. Within the mountain basins, the long-term problem was the lack of water; therefore, the early gauging station locations were biased to determine sustained flows of water for use in the basins. Due to basin characteristics, records for water use in the mountain basins do not give the best information for evaluating flood crests on the Snake River Plain. This will be discussed further in the section on basins.

## 1.2 Flood Prediction and Evaluation

Flood evaluation studies are usually made by one of two methods. The first method requires water flow and flood crest records which can

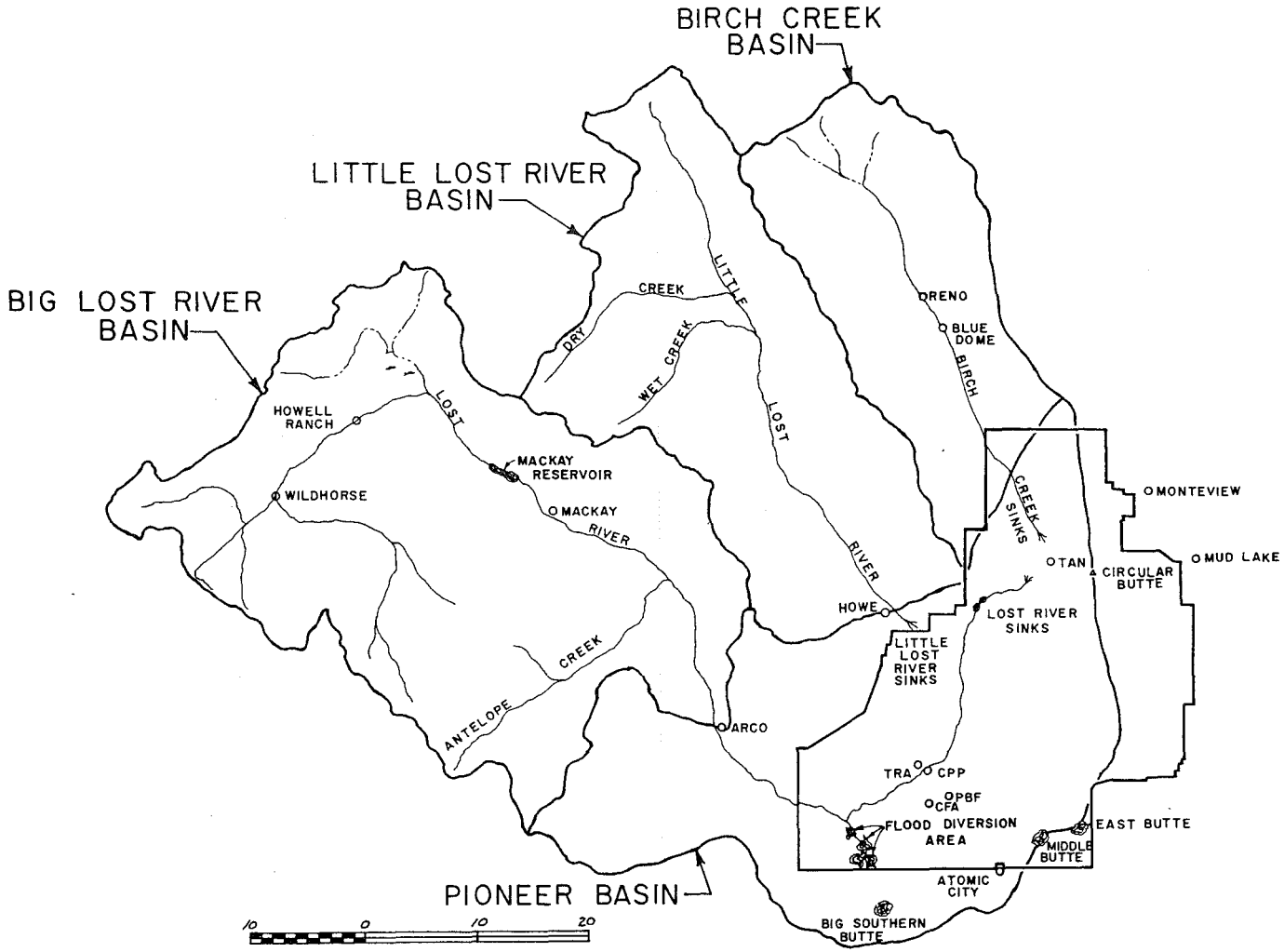


FIGURE 3B-1 DRAINAGE BASINS AFFECTING THE NRTS. The four drainage basins listed above are subdivisions of the area that drains to the Birch Creek Playa (elevation 4784) near TAN. This area is topographically isolated from the regional Snake River Drainage. There is no evidence that water from this area has ever reached the Snake River as surface flow.

(73-670)

be evaluated statistically and projected to show return periods for given flood crests[3]. This is the type of evaluation most frequently used for zoning flood plains, planning water use, and evaluating flood hazards. The second method is used for studies of dam spillways or other critical structures where a failure could lead to a major disaster with loss of life. In this case, hydrometerological methods are used based on a predicted maximum precipitation (PMP) storm occurring under the worst conditions. This gives a "maximum" flood for the area in question[4].

## 1.3 Scope of this Appendix

This appendix is being prepared to examine the potential for flooding problems in conjunction with the LOFT program. With the flood protection systems which are now existing on the NRTS, it appears that a recurrence of any recorded flood would not cause major problems at LOFT; however, flooding in 1969 indicated there could be a potential for flood damage under certain circumstances. The appendix will compile certain basin characteristics, as indicated in the existing literature and unpublished records, to evaluate possible flood situations at LOFT.

The existing streamflow records were biased to evaluate water use in the mountain basins; therefore, they do not give the best information for flood prediction on the Snake River Plain. This study will attempt to project existing records to evaluate flood hazards. PMP storms have been considered in a section of the report, but PMP and maximum flood routing calculations are beyond the scope of this study. Natural flood regulating parameters of the basins indicate that the calculations would have to be quite detailed to be meaningful. These same natural parameters will mitigate PMP storms so they are not as great a hazard here as they are in other regions.

## 2. BASIN MODEL

### 2.1 General Description

The Birch Creek Playa, elevation 4778, is the lowest point in Pioneer Basin. The combined drainage areas slope upward to about 12,600 feet in the mountains which ring and separate the three tributary mountain basins. Surface water which enters Pioneer Basin from the mountain basins either infiltrates to the Snake River Plain Aquifer or is lost by evapotranspiration.

Surface water is seldom generated in Pioneer Basin or on the lower portions of the mountain basins; here, the infiltration capacity of the soil exceeds the normal rainfall. Most surface runoff is generated on the mountain slopes of the uplands (Figure 3B-2), infiltration is high on the lower slopes and valley bottoms. Therefore, very little of the precipitation leaves the mountain basins as surface water. The bulk of water which leaves these mountain basins is in the form of ground water and poses no flood threat.

### 2.2 Geology

The Lost River, Little Lost River, and Birch Creek Basins were formed by normal faulting[5] with the valley blocks dropping several thousand feet relative to the mountain blocks. Subsequently, erosion removed material from the mountain blocks. The eroded material was deposited as alluvial gravel fans at the base of the mountains or was washed downstream to be deposited as alluvium on the lower flood plains of the streams (see Figure 3B-2).

Pioneer Basin (Figure 3B-1) is located almost entirely on the Snake River Plain. The bedrock here is basalt which is highly permeable due to flow structure, cracks, joints, and lava tubes[6, 7]. A portion of the basin is covered with gravel and alluvium deposited where the mountain streams flow onto the plain; however, most of the area consists of basalt either exposed at the surface or covered with a few inches of wind deposited soil[8].

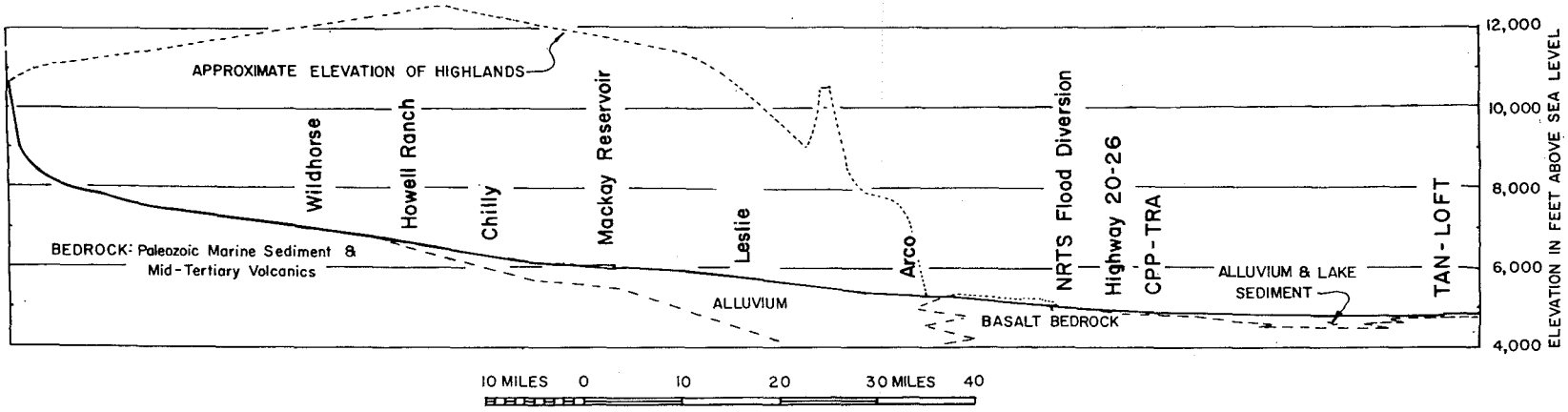


LOST RIVER PROFILE

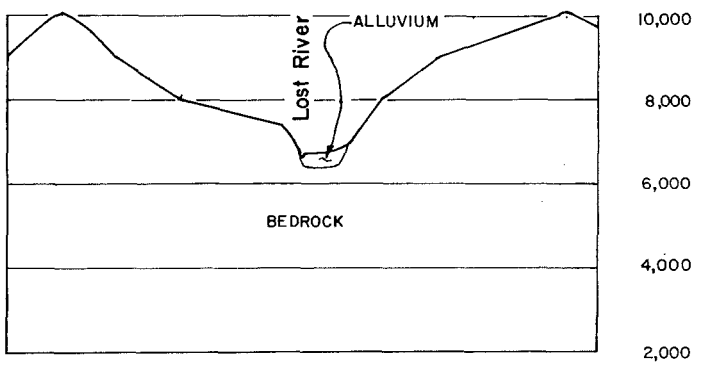


CROSS SECTION NEAR HOWELL RANCH

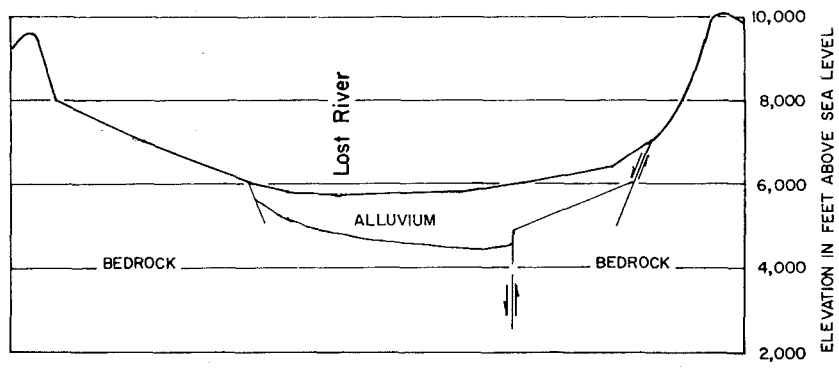


CROSS SECTION NEAR LESLIE

5 MILES 0 5 10 15 MILES 20

FIGURE 3B-2 LOST RIVER PROFILE AND SECTIONS

(73-668)

## 2.3 Climate

The normal annual precipitation in the drainage basins ranges from a low of 6-inches in the rain shadow of the White Knob Mountains (Big Lost River Valley) to over 50-inches for the highest portion of the Lemhi Range (between the Lost and Little Lost River Basins). Most of Pioneer Basin receives 8 to 10-inches while over half of the area of the mountain basins receive less than 16-inches. The average rainfall is highest in the Lost River Basin and decreases across the Little Lost River and Birch Creek Basins. Since the prevailing winds move from west to east, oreographic rainfall over the western mountains removes much of the moisture from the atmosphere leaving less available moisture for the eastern most basins[3].

The combined drainage basins range in elevation from about 4,778 feet to over 12,600 feet above sea level. Thus, the area has over 7800 feet of relief; this leads to great differences in temperature or climate at any given time. These differences are seen in many ways. The low land in the Pioneer Basin has been subjected to periods of warm wind, rain, and snow melt during the winter months. These periods have caused runoff and minor flooding in the lower basins during regional storms that substantially increased the snow pack in the uplands. The largest documented runoff in the lower parts of the basins has occurred in January, February, or March; conversely, the maximum runoff from the highlands usually comes in May or June.

Frost generally leaves the ground in the Pioneer Basin and the valley bottoms of the mountain basins in March or April. This prepares the permeable soils and gravels to accept surface water by infiltration before the bulk of the snow pack starts to melt.

## 2.4 Runoff, Infiltration, and Natural Regulation in the Three Mountain Basins

2.4.1 General Conditions. On the mountain slopes of the basins, where most precipitation occurs, bedrock is at or near the surface. Surface water generated here runs down the slope and out onto the alluvial fans at the base of the mountains (the alluvium above 6000

feet elevation, Leslie Section, Figure 3B-2, would be an alluvial fan). Most runoff disappears into permeable gravel on the alluvial fans. Some of the water is returned to the main streams through springs but most water leaves the mountain basins as ground water. The infiltration capacity of the alluvial fans is large when compared to precipitation on the lower slopes; therefore, runoff is seldom generated on the alluvial fans.

2.4.2 Birch Creek Basin. This basin is a classic example of the general condition stated above. No perennial streams reach the main stem of Birch Creek from the mountains. Birch Creek rises from springs in the valley floor a few miles above the gauging station at Reno (Figure 3B-1). At the Reno Gauging Station, the stream is "almost completely regulated by natural influences, and the mean annual flood is only very slightly larger than the stream's average discharge."[a] The flow in Birch Creek decreases below Blue Dome as water infiltrates into the valley gravels. The last water in the creek is picked up for irrigation just above the NRTS boundary and transported out of the basin to the east in the Reno Ranch irrigation canal.

2.4.3 Little Lost River Basin. The Little Lost River Basin is slightly larger than Birch Creek Basin and is, for the most part, quite similar; however, some perennial streams cross the alluvial fans to become surface water tributaries to the river. The two most noteworthy of these are Wet Creek and Dry Creek, which enter from the west. These tributaries start in "bedrock" valleys in the mountains. They increase in flow through the "bedrock" portion of their valleys but again decrease as they flow across alluvial gravel to the river channel.

A local irrigation company has channeled the flow of Dry Creek through a partially lined ditch, across the alluvial fans, to increase the water available for irrigation.

The flow in the Little Lost River changes from place to place along its course. In places it is enlarged by springs and contributions

[a] Reference 3, Page 20

from ground water (effluent stream), while in other places it flows above the ground water table and loses water by infiltration (influent stream). In the last few miles near Howe, it loses water; the last water is dissipated in the Little Lost River Sinks which are on and adjacent to the NRTS (Figure 3B-1). Flood water in the river channel has not been recorded as ever joining the Lost River in historic time, even during periods of severe flooding at Howe.

2.4.4 Big Lost River Basin. The Big Lost River Basin is larger and more complex than the Birch Creek or Little Lost River Basins. The Lost River rises in a bedrock basin above Howell's Ranch (Figure 3B-2); the main tributary, Antelope Creek, flows for more than two-thirds of its length through a bedrock basin (infiltration is small). Below Howell's Ranch the Lost River flows over fan gravels and alluvium where water infiltrates. The mean annual flood at Howell's Ranch is 2200 cfs; however, about twenty miles downstream at the inlet to Mackay Reservoir the mean annual flood has decreased to 1570 cfs[3]. This shows evidence of natural regulation by infiltration, channel storage, bank storage, and percolation to the mass of ground water which leaves the basin without ever returning to the surface. Over 80 percent of the water in the basin leaves by underflow[9].

## 2.5 Recent Flood History

2.5.1 Flooding in February, 1962. In the winter of 1962 extensive flooding occurred through southern Idaho and northern Nevada[10]. Local flooding was confined to Pioneer Basin and the lower valleys of the three local mountain basins (Figure 3B-1).

The events leading to the flooding started in late fall and winter when a larger than normal amount of precipitation fell and infiltrated into the soils. Later a cold period drove the frost line deep in the soil and formed ground ice which effectively eliminated the soils permeability. Later, snow fell on top of frozen ground. Warm weather accompanied by wind and rain (chinook) triggered the flood. Water from the rain and snowmelt could not infiltrate into the frozen ground; it started moving downslope to the Lost River. Minor flooding

occurred in most of the areas as the warm weather persisted. The Lost River channel was running full, water filled the Lost River Sinks and started moving down the channel towards TAN. The warm weather was also drawing frost out of the ground. When the frost was gone, the flood virtually sank into the permeable soils on the flood plain, leaving the last snow drifts to waste away without generating any more surface water.

2.5.2 Flooding in December, 1964. Conditions similar to those in 1962 occurred locally around the TAN Area in 1964. Water accumulated inside borrow ditches along Snake Avenue and the dolley tracks and remained there several weeks after the storm was over. This storm led to the construction of settling basins and emergency injection wells at three locations near TAN. The basins are designed to hold the normal year's runoff for evaporation or infiltration. The inlets in the wells are placed just high enough to lower the water level so no water will stand along the dolley tracks for prolonged periods. In most years the basins will not be filled and the wells will not accept any water.

2.5.3 Flooding in 1965. A record snow pack occurred in the Lost River Basin in the winter of 1964-65. The maximum runoff occurred in late June. The Mackay Reservoir was full and most of the runoff was passed on down the basin. The flood diversion works on the NRTS were put to their first major test. During the peak of the flood, June 26, 1965, about 1800 cfs was diverted to the spreading areas[11].

Water was sent to the spreading areas and/or down the channel through the summer and fall of that year. The 1965 flood was over twice as large as the largest previous flood in the first 46 years of record.

As a result of this flood some additional work was done on the flood control facilities to beef them up. Studies were started to determine the adequacy of the structures. Lampke[12] computed the capacity of the flood diversion channels. Carrigan[13] computed the discharge and frequency of floods of up to a 300-year return period; his work also included a flood routing study to evaluate the diversion

facilities. This work showed the present facilities were adequate for up to 55-year floods and could probably be upgraded to divert a 300-year flood. Means of instituting his recommendations were outlined and cost estimates were prepared by Aerojet Nuclear Company Construction Engineering Division. This work is presently scheduled to be accomplished under the FY-75 budget.

2.5.4 Flooding in 1969. A considerable amount of snow accumulated on the NRTS in December and early January. On January 14 a warming trend started, by January 19 this trend had turned into a chinook with light rain and warm wind. Surface water started moving over the still frozen ground on January 19. Deep drifts blocked some culverts and borrow ditches and caused some water to run over Highway 20, the CFA rail spur, and some site roads. By January 21, frost was leaving the ground and the water started sinking into the soil. On January 23, the temperature dropped below freezing and surface water decreased. The saturated upper soil again froze as cold weather drove the frost into the ground; at elevations of 5000 to 6000 feet where snowmelt was incomplete, water and slush froze to leave one to three inches of ice on the ground.

More snow accumulated in February and early March. The spring thaw started in mid-March when most of the daylight hours were above freezing. By March 24 above-freezing temperatures persisted into the night increasing snowmelt; surface water started moving at the south end of the NRTS. Water again flowed over Highway 20; near CFA, water flowed over East Portland from March 24 to March 28. The flooding at the south end was essentially over on March 28 when it became apparent that there would be problems in the TAN Area.

Some water had run into the Birch Creek Playa earlier, but March 28 marked the heaviest flows. Water started raising in the playa, and by 5:00 p.m. a large stream of water was running west of the hanger, the catch basins were full and water had risen to within 6-inches of the FET pump house floors.

Dikes were constructed to protect construction buildings and material yards which were built on the playa floor (about 4780 feet

elevation). The vehicle tunnel was sandbagged and soil and sandbag dikes were built around the well house.

A cursory reconnaissance indicated most of the water was coming from the lower valley floor of Birch Creek and the alluvial fans along the Lemhi Mountains. Frost and ground ice had essentially shut off the normal permeability of the alluvial gravels. Melting at this time was occurring up to about 5500 feet elevation. Above that elevation, the snow was still frozen and surface water was not evident.

On Saturday, March 29, emergency construction of channels was started from the Birch Creek distributaries to a gravel pit about 1-1/2 miles north of the hanger. This pit intercepted lenses of open work gravel which promised exceptional permeability. The channels were completed Sunday, March 30 and Birch Creek was diverted into the pit. On Monday, March 31, all snow had melted to about 2 miles above State Highway 22 (elevation 5200). This was the first day that snow started melting at Blue Dome (elevation 6200) about 10 miles up the valley.

Very little water flowed on April 1, with the flow that did cross Highway 22 coming late in the afternoon from that day's snowmelt. On April 2, a warm rain occurred in the Birch Creek and Little Lost River valleys. The Little Lost River and Birch Creek were rising a few miles upstream from the mouths of the basins. On April 3 a set of channels was started from Birch Creek to a second gravel pit near Highway 22 in anticipation of the coming flood crest. About two-thirds of the Birch Creek water, which passed under Highway 22, was sinking into the alluvium before it reached the lower gravel pit. This indicated the frost had left the ground in the lower sinks. The new channels to the upper gravel pit were completed on April 4. The writer hiked from Highway 28 to the Reno Diversion Dam on April 4. The terrain here was covered with 4 to 10 inches of wet, soggy, snow. About 2 inches of ground ice covered the ground under the slush. Water was moving in several shallow drainages; where these intercepted the Reno Canal, they caused canal breaks. The Reno Canal was not large enough to convey the water.

High water marks in the Birch Creek channel indicated the creek had crested the day before (April 3). At high water, a channel about 60-feet wide had carried water about 5-feet deep. This was several times more water than was ever observed a few miles downstream at Highway 22. Subsequent investigations indicated that the frost had left the upper sinks before this crest to account for some of the water loss. Ice jams along the main channel had caused the water to spread into subsidiary channels where it was lost by infiltration into the gravels which were now frost-free. Thus, the major crest of the 1969 Birch Creek flood did not reach the LOFT area. Natural mechanisms dissipated much of the water before it reached the emergency facilities which had been built to control the anticipated flood.

The snowmelt progressed up the valley through the next few days. Some rain accompanied the melting; however, with the upper and lower sinks open, the flood threat was past. The volume of flow at Highway 22 did not again approach the quantities of water which flowed between March 28 and April 1. The maximum flow that affected LOFT was generated on the NRTS and nearby areas below 5500 feet elevation. Much of the water reached the playa as a sheet flood over still frozen alluvial gravels.

## 3. POSSIBLE FLOODS AND FLOOD PROTECTION

### 3.1 Flood Protection at LOFT

The flooding in 1969 indicated that some additional protection was needed in the LOFT area. The emergency channels on the Birch Creek fan and the dikes around the LOFT facility were left in place. A dike system was built around the west end of the TAN Area. This will allow the TAN and LOFT areas to operate through floods equal to or larger than the 1969 flood.

Figure 3B-3 shows the storage capacity of the playa outside the dikes. In the 1969 flood, about 3500 acre feet of water accumulated in the playa. The dike storage will handle a flood over three times as large as the 1969 flood. The floor of the LOFT facility is at 4790

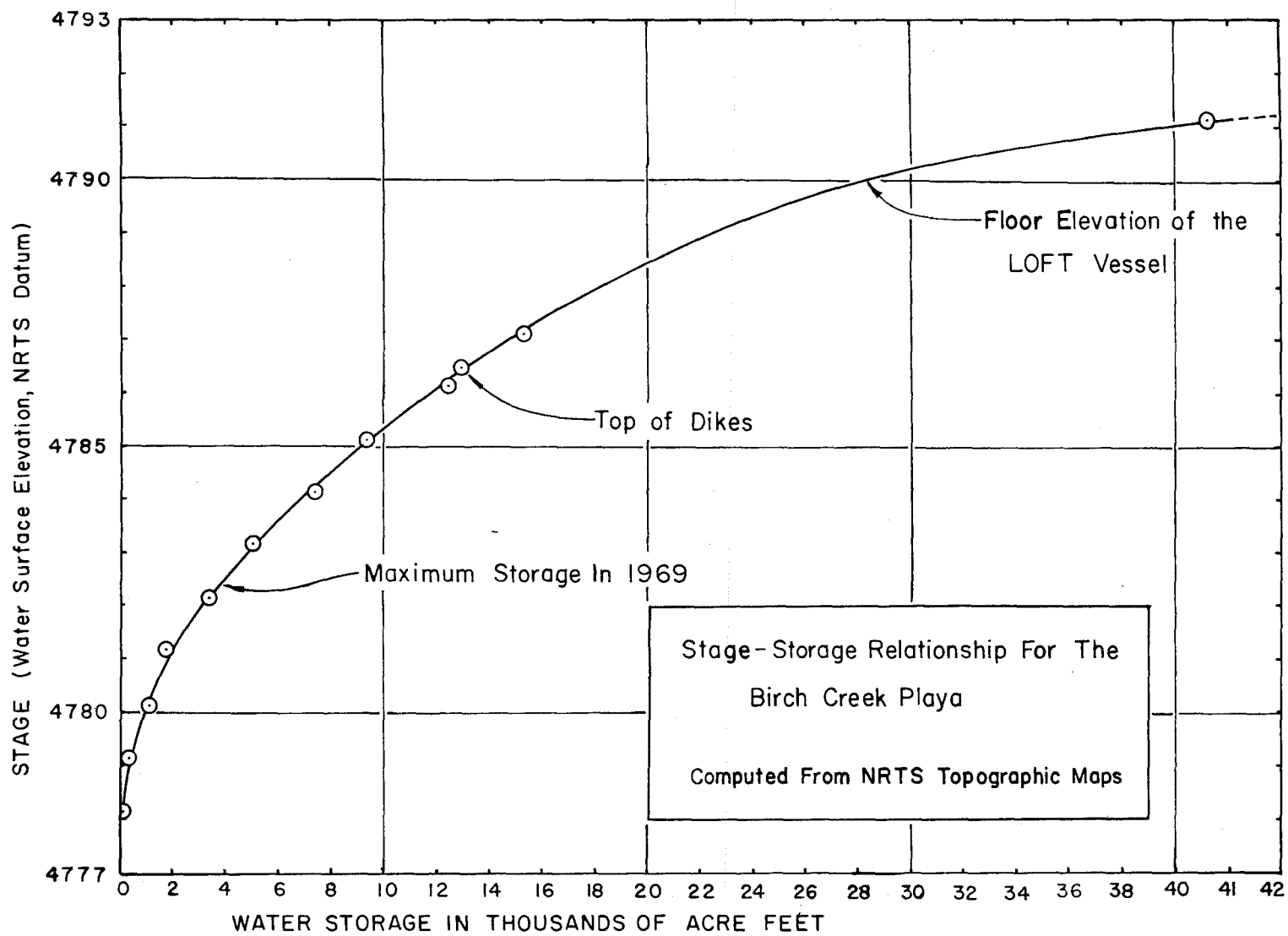


FIGURE 3B-3 STORAGE CAPACITY OF THE BIRCH CREEK PLAYA

Construction Engineering File

feet elevation. The capacity of the playa is about 28 thousand acre feet at this elevation, this is eight times the volume stored in 1969.

The emergency injection wells, when submerged as in a major flood, will eliminate about 25 acre feet of water per day from the playa. This capacity coupled with evaporation and infiltration would dissipate any flood water stored outside the dikes.

## 3.2 Lost River Basin

Carrigan[13] computed discharge and return periods for Lost River floods up to 300-year frequency at the flood diversion area on the NRTS. His work also included a flood routing study to evaluate the present facilities. This study showed the present facilities were adequate for up to 55-year floods and could probably be upgraded to divert a 300-year flood. The work required to upgrade the facilities was defined and a cost estimate was prepared. This work is scheduled to be accomplished in FY-75. The chance of a major flood occurring before the diversion works are enlarged is small. Such a flood could only occur late in the spring and after a record snowpack year. Thus, the flood would be anticipated. The gravel flood plain, playas and sinks between the flood diversion works and LOFT would reduce the volume of flow and slow the advance of any flood that would breach the diversion works. It is believed that it would take more than two weeks for a 300-year flood to travel from the diversion dam to LOFT and to accumulate enough water to interfere with normal operations.

The snowpack conditions in the Lost River Basin would be known 2 to 3 months in advance of a possible large flood. The onset of flooding at LOFT would be known at least two weeks in advance. While there is a small statistical chance of property damage at LOFT, the warning period would give ample time to avert a radiation incident in any flood from the Lost River Basin.

## 3.3 Little Lost River Basin

The Little Lost River Basin is smaller and is in the rain shadow

of the mountains of the Lost River Basin[a]. For years the streamflow records were only collected in the upper reaches of the basin(2). The period of record at the mouth of the basin is short. Extrapolation of records near Howe indicated that a 100-year flood there would have a flood of about 550 cubic feet per second(3).

Below Howe the Lost River runs into a broad flat area called the Little Lost River Sinks. The river must spread over an area of several tens of square miles before it reaches the Lost River Channel above the Lost River Sinks. Here again infiltration has a major effect on the flood.

Infiltration rates on and adjacent to the NRTS vary widely. Nace reported infiltration rates from 1 to more than 40 ft/sq ft/day from the north central portion of the NRTS(14). Depending on the soil porosity, these rates can be translated into infiltration volumes from 0.3 to 15 cu ft/sq ft/day.

In the Lost River flood diversion spreading areas (Figure 3B-1), infiltration volumes from 0.7 to 2.6 cu ft/sq ft/day have been recorded for sustained periods(15).

To estimate the area required to dissipate a 100-year flood, we could select an appropriate infiltration value from the observations listed above. If we use a low observed rate, 0.7 cu ft/sq ft/day, we find that it would require about 2-1/2 square miles to dissipate the 550 cfs Little Lost River flood (100-year flood at Howe). Topographic maps of the station indicate that several times this much area must be covered before the water reaches the Lost River Channel above the Lost River Sinks. This indicates that a 100-year Little Lost River flood would not be expected to reach the Lost River Channel, much less the LOFT area.

## 3.4 Birch Creek

The records concerning Birch Creek floods reaching the site are sketchy. Nace(14) reported that Birch Creek runoff last mingled with

[a] See Reference 3, Plate 2 in Pocket

the Lost River water in the Birch Creek Playa in 1894. Conversations with old timers indicate that Birch Creek also entered the playa once or twice between 1900 and 1910. The 1969 flood apparently was the next time that any significant amount of water reached the playa from the Birch Creek drainage (it was the only time since the NRTS was created in the early 1950 decade).

Taylor[3] studied the magnitude and frequency of floods in the Snake River Basin (includes the NRTS and the area on Figure 3B-1). He divided the Snake River Basin into nine regions of similar hydrologic characteristics and computed the ratio of periodic flood discharge to the mean annual flood for each region. The LOFT area and the valley floor of Birch Creek Basin were in Region D, the relationship he calculated for periodic floods at LOFT elevation is shown in Table 3B-1 below.

TABLE 3B-1

LOWER BIRCH CREEK BASIN

| Recurrence Interval Years | Ratio of Discharge to Mean Annual Flood |
|---|---|
| 1.1 | .05 |
| 2.3 | 1 |
| 5 | 1.8 |
| 10 | 2.8 |
| 20 | 3.2 |
| 30 | 3.7 |
| 50 | 4.4 |
| 100 | 5.2* |

*Extrapolated from Thomas' curve

While the data will not allow a pure statistical evaluation, it will allow some intuitive reasoning to evaluate the hazards. The 1969 flood can be assumed to be equal to a flood with a return period of between 30 and 100-years. If the flood was a 30-year flood, the 100-year flood would be about 1.4 times as large. The present dikes and flood control ditches are designed to control a flood 3 times as

large as the 1969 flood. Thus, it would appear that the present controls will control a flood with a return period much longer than 100 years.

The flood protection appears adequate based on present flood information. The existing flood protection systems were relatively inexpensive to build. Additional protection would be more costly. From the standpoint of property damage, additional flood protection could not be justified without further information and study.

Considering the nature of floods which could occur, it appears that the present flood control facilities are adequate to avert a flood caused radiation incident. The snowpack and ground conditions which could cause a maximum flood would be known a month or more in advance of a possible flood. The flood dikes would buy a few days time in the event of a maximum flood, this time should be adequate to prevent or mitigate any possible flood caused radiation incident at LOFT.

### 3.5 Predicted Maximum Precipitation (PMP) Storms

The PMP storm refers to the maximum precipitation that can occur in an area in a given time span. This is based on the maximum amount of moisture that can be brought into a basin to be released as precipitation by natural atmospheric processes[4]. The maximum precipitation is used as a basis for predicting surface runoff and stream flow in various parts of the basin. The hydrographs for subsidiary streams are determined and are used in a flood routing study to determine the crest and other characteristics of a maximum basin flood.

The complex topographical, geological, hydrological, and meterological paramters indicate that a study would have to be quite detailed to give meaningful results using PMP and flood routing methods to determine a maximum flood for the local basins. For example, the Cedar Creek Basin east of Chilly is an intermittent tributary to the Lost River. This basin has an area of less than 10 square miles; it has about 6000 feet of relief; the precipitation index ranges from 8 to 50 inches per year at various elevations; the infiltration varies from

none on the upper bedrock slopes to several cu ft/sq ft/day in some of the loose alluvial gravels. One can imagine the simplifying assumptions which would have to be made to calculate a flood hydrograph for this one basin. Multiply the possible errors in this basin by the hundred or so other tributary basins in the mountains and the problem of predicting an accurate PMP flood can be seen.

PMP storms have been considered in this study although PMP storm calculations have not been made. Under winter conditions PMP storms would add to the snowpack in the four basins. The most unfavorable fall, winter or spring condition would be similar to the 1962 floods when runoff was generated on frozen ground in the lower parts of the basins but higher up the storm only added to the snowpack. During a late spring or summer PMP storm (when melting conditions prevailed at all elevations in the basins), the natural flood regulation processes would mitigate the flood. The permeable gravels of the alluvial fans would be open as would be the soils in the Pioneer Basin. Thus, much of the flood water would infiltrate to reduce surface runoff and subsequent flooding in Pioneer Basin.

In many parts of the United States, PMP storms are a very real threat; for example, large basins with only one or two thousand feet of relief. In such an area a PMP storm could cause runoff and flooding over areas that may include several states (Mississippi Basin for example). Here in the local basins the same natural parameters which complicate PMP flood calculations also act to mitigate the possible consequences of a PMP storm.

## 4. CONCLUSIONS

The topography, relief and permeable soils in the local basins (Figure 3B-1) combine to regulate natural floods. Most of the precipitation leaves the mountain basins as ground water; the lower elevations of the mountain basins and the whole of the Pioneer Basin have permeable soils which seldom generate surface runoff. The permeability is greater than rainfall. The flow in streams decreases

downstream from where they enter the gravel-filled valley floors until they disappear in Pioneer Basin.

The available data is not complete enough to determine all the characteristics of floods which could effect LOFT. Thus, while it appears there is no serious flood threat at LOFT, this hypothesis cannot be proved in absolute terms. The study does indicate that a warning period would be available before any damaging flood could affect LOFT. We must consider a remote probability of property damage; however, the warning time should be adequate to avert a flood caused radiation incident connected with the LOFT program.

## 5. REFERENCES CITED


1. R. L. Nace, Morris, Deutsch, and P. T. Voegeli, Geography, Geology and Water Resources of the National Reactor Testing Station, Idaho, Part 2, Geography and Geology, IDO-22033 - USGS (1956), pp 5.

2. H. P. Eisenhuth, Index of Surface-Water Records to September 30, 1967, Part 13 - Snake River Basin. U. S. Geological Survey Circular 583, Washington, D. C. (1968).

3. C. A. Thomas, H. C. Broom and J. E. Cummins, Magnitude and Frequency of Floods in the United States, Part 13 - Snake River Basin. U. S. Geological Survey Water-Supply Paper 1688, Washington, D. C. (1963).

4. Probable Maximum Precipitation, Northwest States, Hydrometerological Report No. 43, Prepared by Hydrometerological Branch, Office of Hydrology, Weather Bureau, U. S. Department of Commerce, Washington, D. C. (November, 1966).

5. E. M. Baldwin, Faulting in the Lost River Range Area of Idaho, American Journal of Science, Vol. 249, pp. 884-902 (December, 1951).

6. H. T. Stearns, Lynn Crandall, and W. G. Steward, Geology and Ground Water Resources of the Snake River Plain in Southeastern Idaho, U. S. Geological Survey Water-Supply Paper 774, Washington, D. C. (1938).

7. M. R. Niccum, The Construction and Subsurface Geology of the PBF Waste Seepage Wells, Proceedings, 8th Annual Engineering Geology Symposium, Idaho State University, Pocatello, Idaho (April, 1970).

8. E. H. Walker, Subsurface Geology of the National Reactor Testing Station, Idaho, U. S. Geological Survey Bulletin 1133-B, Washington, D. C. (1964).

9. E. G. Crosthwaite, C. A. Thomas and K. L. Dyer, Water Resources of the Big Lost River Basin, South-Central Idaho, U. S. Geological Survey Open File Report, Boise, Idaho (1970).

10. C. A. Thomas and R. D. Lamke, Floods of February 1962 in Southern Idaho and Northeastern Nevada, U. S. Geological Survey Circular 467, Washington, D. C. (1962).

11. J. T. Barraclough, W. E. Teasdale and R. C. Jensen, Hydrology of the National Reactor Testing Station, Idaho in 1965, U. S. Geological Survey Open File Report (IDO-22048), Idaho Falls, Idaho (February, 1967), pp. 47-65.

12. R. D. Lamke, Stage-Discharge Relations on the Big Lost River Within the National Reactor Testing Station, Idaho,(IDO-22050), U. S. Geological Survey Open File Report, Idaho Falls, Idaho (March, 1969).

13. P. H. Carrigan, Probability of Exceeding Capacity of the Flood-Control System at the National Reactor Testing Station, Idaho, (IDO-22052-USGS), U. S. Geological Survey Open File Report, Idaho Falls, Idaho (January, 1972).

14. R. L. Nace, J. W. Stewart, W. C. Walton and others, Geography, Geology and Water Resources of the National Reactor Testing Station, Idaho, Part 3 - Hydrology, (IDO-2034-USGS), U. S. Geological Survey Report (1959).

15. J. T. Barraclough, J. T. Teasdale, J. B. Robertson and R. G. Jensen, Hydrology of the National Reactor Testing Station, Idaho, 1966, U. S. Geological Survey Open File Report, (TID-4500), Idaho Falls, Idaho (October, 1967).

CONTENTS


4.0 REACTOR . . . . . 4-1

4.1 Design Bases . . . . . 4-1

4.1.1 Performance Objectives . . . . . 4-1
4.1.2 Limits . . . . . 4-2

4.1.2.1 Nuclear Limits . . . . . 4-2
4.1.2.2 Reactivity Control Limits . . . . . 4-2
4.1.2.3 Thermal and Hydraulic Limits . . . . . 4-3
4.1.2.4 Mechanical Limits . . . . . 4-4

4.1.2.4.1 Reactor Internals . . . . . 4-4
4.1.2.4.2 Fuel Assemblies . . . . . 4-7
4.1.2.4.3 Control Rod Assemblies . . . . . 4-8
4.1.2.4.4 Control Rod Drives . . . . . 4-9
4.1.2.4.5 Fuel Module Instrumentation Penetrations (Including Support Arms) . 4-11
4.1.2.4.6 Fuel Module Upper Support Structures . . . . . 4-11

4.2 Reactor Design . . . . . 4-12

4.2.1 General Summary . . . . . 4-12
4.2.2 Nuclear Design and Evaluation . . . . . 4-12

4.2.2.1 Nuclear Characteristics of Design . . . . . 4-14

4.2.2.1.1 Nuclear Design Data . . . . . 4-14
4.2.2.1.2 Reactivity Control Distribution . . . . . 4-16
4.2.2.1.3 Reactivity Shutdown Analyses . . . . . 4-16
4.2.2.1.4 Reactivity Coefficients . . . . . 4-18

4.2.2.2 Nuclear Design Evaluation . . . . . 4-22

4.2.3 Thermal-Hydraulic Design and Evaluation . . . . . 4-23

4.2.3.1 Thermal and Hydraulic Characteristics of Design . . . . . 4-23

4.2.3.1.1 Design Data . . . . . 4-23
4.2.3.1.2 Heat Transfer Correlation . . . . . 4-23
4.2.3.1.3 Engineering Hot Channel Factors . . . . . 4-28
4.2.3.1.4 Fuel and Cladding Thermal Conditions . . . . . 4-28

4.2.3.2 Thermal and Hydraulic Evaluation . . . . . 4-29

4.2.3.2.1 DNBRs for Steady State . . . . . 4-29
4.2.3.2.2 DNBRs for Transients . . . . . 4-30

4.2.4 Mechanical Design and Evaluation . . . . . 4-30

4.2.4.1 Reactor Internals . . . . . 4-30

4.2.4.1.1 Core Support Barrel . . . . . 4-31
4.2.4.1.2 Upper Core Support Structure . . . . . 4-33
4.2.4.1.3 Lower Core Support Structure . . . . . 4-35
4.2.4.1.4 Flow Skirt-Core Filler Assembly . . . . . 4-37
4.2.4.1.5 Instrument Head Filler . . . . . 4-38
4.2.4.1.6 Reactor Vessel Fillers . . . . . 4-39

4.2.4.2 Fuel Modules (Core I) . . . . . 4-42

4.2.4.2.1 General Description . . . . . 4-42
4.2.4.2.2 Detailed Description . . . . . 4-46

4.2.4.3 Control Rod Drive Assembly 4-51

4.2.4.3.1 General Description . . . . . 4-51

4.2.4.4 Evaluation . . . . . 4-54

4.2.4.4.1 Fuel Rod . . . . . 4-54
4.2.4.4.2 Skeleton and Control Rods . . . . . 4-55
4.2.4.4.3 Test Instrumentation . . . . . 4-56

4.2.4.5 Control Rod Drive System . . . . . 4-56

4.2.4.5.1 General Description . . . . . 4-56
4.2.4.5.2 General Design Criteria . . . . . 4-57
4.2.4.5.3 Description of CRDMs . . . . . 4-59
4.2.4.5.4 Control Rod Drive Control System (Control Package) . . . . . 4-62
4.2.4.5.5 Control Rod Drive System Evaluation . . . . . 4-62

4.2.5 Fuel Densification Effects . . . . . 4-63

4.3 Tests and Inspections . . . . . 4-63

4.3.1 Nuclear Tests and Inspections . . . . . 4-63

4.3.1.1 Critical Tests and Low-Power Physics Tests . . . . 4-63

4.3.1.1.1 Phase 1 - Precore Load Testing and Operation . . . . . 4-64
4.3.1.1.2 Phase II - Initial Core Loading and Zero-Power Tests . . . . . 4-65
4.3.1.1.3 Phase III - Power Testing . . . . . 4-69

4.3.2 Internals Tests and Inspection . . . . . 4-77

4.3.2.1 Component Tests . . . . . 4-77

4.4 Special Features Having Safety Significance . . . . . 4-77

4.4.1 Reactor System Design (First Level of Safety) . . . . . 4-77
4.4.2 Protective Systems (Second Level of Safety). . . . . 4-78

4.5 References . . . . . 4-79

## FIGURES

4-1. Control rod assembly . . . . . 4-81

4-2. Control rod . . . . . 4-82

4-3. Moderator temperature coefficient . . . . . 4-83

4-4. COBRA model of LOFT central fuel assembly . . . . . 4-84

4-5. Volumetric heat generation . . . . . 4-84

4-6. Thermal conductivity of $UO_2$. . . . . 4-85

4-7. Thermal conductivity of zircaloy-4 . . . . . 4-86

4-8. Specific heat of $UO_2$ . . . . . 4-87

4-9. LOFT internals . . . . . 4-88

4-10. Reactor section . . . . . 4-89

4-11. Core layout. . . . . 4-90

4-12. LOFT center fuel module. . . . . 4-91

4-13. Fuel bundle assembly (Type A) . . . . . 4-92

4-14. Fuel bundle assembly (Type B) . . . . . 4-93

4-15. Control fuel module . . . . . 4-94

4-16. Fuel bundle assembly (Type C) . . . . . 4-95

4-17. Corner fuel module. . . . . 4-96

4-18. Fuel rod . . . . . 4-97

4-19. Control rod drive mechanism . . . . . 4-98

4-20. Mechanism operating parts (cutaway view) . . . . . 4-99

4-21a. Control rod control system . . . . . .4-100

4-21b. Control rod control system . . . . . .4-101

4-21c. Control rod control system . . . . . .4-102

## TABLES

4-I. Core Support Structure Materials . . . . . 4-4

4-II. Core Design, Thermal, and Hydraulic Data. . . . . 4-13

4-III. Nuclear Design Data. . . . . 4-15

4-IV. Core Multiplication Factors for Various Conditions . . . . . 4-16

4-V. Reactivity Control Distribution. . . . . 4-17

4-VI. Shutdown Reactivity Analysis . . . . . 4-19

4-VII. Soluble Boron Concentrations and Worths. . . . . 4-20

4-VIII. Uniform Reactor Temperature Coefficient . . . . . 4-24

4-IX. Control Rod Assembly Design Data . . . . . 4-52

4-X. Control Rod Drive Design Data. . . . . 4-59

## 4.0 REACTOR

This section contains a design description of the LOFT reactor and other related discussions. It should be noted that the design description contained herein includes the results of the thermal-hydraulic analyses that were not always based upon final representation of LOFT system and component designs. Also, in some cases the analyses may not have been as conservative as those frequently used in FSARs. Refined analyses now in progress and due for completion in 1974 include final system design data and more conservative assumptions in several instances. These new analytical results are not expected to cause any system or component redesign but may slightly alter operating plans, particularly with regard to minimum flow at full power.

### 4.1 Design Bases

The reactor is designed to meet the performance objectives specified in 4.1.1 without exceeding the limits of design and operation specified in 4.1.2.

#### 4.1.1 Performance Objectives

The reactor is designed to operate at 55 MW(t) with sufficient design margins to accommodate transient operation and instrument error without damage to the core and without exceeding the safety valve pressure settings in the primary coolant system. The fuel rods, cladding, and fuel module assemblies are designed to be typical of current LPWR design and to maintain their integrity for the specified maximum core life under all non-experimental conditions.

Reactivity is controlled by control rod assemblies (CRAs) and soluble boron content level in the coolant. Sufficient CRA worth is available to shut the reactor down ($k_{eff} \leq 0.99$) in the hot condition at any time during the life cycle with the most reactive CRA stuck in the fully withdrawn position. The combination of CRAs and equipment which is provided to add water of high soluble boron content to the reactor coolant ensures a similar shutdown capability under all reactor coolant operating temperatures as well as down to ambient temperatures.

The reactivity worth of CRAs and the rate at which reactivity can be added are limited to ensure that credible reactivity accidents cannot cause a transient capable of damaging the primary coolant system or causing significant fuel failure.

### 4.1.2 Limits

#### 4.1.2.1 Nuclear Limits

The core has been designed to the following limits:

(1) The fuel enrichment is such as to assure a minimum of 2000 effective full-power hours (EFPH) of operation.

(2) The Doppler coefficient is negative, and the control system is capable of compensating for reactivity changes resulting from nuclear coefficients, either positive or negative.

(3) Control systems are available to handle core xenon and samarium buildup as they occur during operation without jeopardizing the safety of the system.

(4) The core has sufficient excess reactivity to produce the design power level of 55MW(t) for 2000 EFPH without exceeding control capacity or shutdown margins.

(5) The controlled reactivity insertion rates in the range from $0.3 \times 10^{-4}$ $\Delta k/k/sec$[a] for single CRA to $3 \times 10^{-4}$ $\Delta k/k/sec$[a] for all four CRAs. For soluble boron removal, the reactivity insertion rate is limited to $0.1 \times 10^{-4}$ $\Delta k/k/sec$[b].

(6) The control system has been designed to compensate for the overall power coefficient when going from full power to hot standby conditions.

#### 4.1.2.2 Reactivity Control Limits

The control system and operating procedures will provide adequate control of the core reactivity and power distribution. The following control limits will be met:

---

[a] Maximum rod worth at 2 in./min, 1643 ppm boron, $577°T_{ave}$.

[b] Dilution rate 6 gpm, $577°T_{ave}$, 1643 ppm boron.

(1) Sufficient control will be available to produce a shutdown margin of at least 1% $\Delta\rho$[a].

(2) The shutdown margin of 1% $\Delta\rho$ will be maintained with the most reactive control rod stuck out of the core.

(3) Sufficient control will be available to produce a shutdown margin of at least 10% $\Delta\rho$ (all rods in) for refueling and inspection purposes.

4.1.2.3 Thermal and Hydraulic Limits

The LOFT reactor core is designed to satisfy the following thermal and hydraulic limiting conditions:

(1) No fuel melting under 7% overpower. The basis for establishing the 7%-overpower steady state value is based on the nominal high nuclear flux scram setpoint at 7% overpower. This high nuclear flux scram setpoint was selected as the maximum overpower point because it exceeds the calculated maximum steady state power based on a $\pm$ 2% control band, $\pm$ 2% calibration error, and $\pm$ 2% instrument error.

(2) The minimum departure from nucleate boiling ratio (DNBR) shall be equal to or greater than 1.30 during normal operation and normal operating transient conditions at high flow ($3.6 \times 10^6$ lbm/hr). By limiting DNBR, adequate heat transfer is assured between the fuel cladding and the reactor coolant, thereby preventing clad overheating and maintaining fuel integrity. At low-flow or pretest operating conditions, adequate heat transfer between the fuel cladding and the reactor coolant is assured in a similar way; however, the minimum DNBR requirement governing these operating conditions will be established and agreed to by the AEC in the experiment operating procedure.

---

[a] The excess reactivity definition used herein is $\% \Delta\rho = \frac{k_1 - k_2}{k_1 \; k_2} \times 100$.

The total core power is 55MW(t). The maximum steady state overpower condition is 107% of the total reactor core power.

4.1.2.4 Mechanical Limits

4.1.2.4.1 Reactor Internals

The reactor internals include all those components which serve to (a) support and position properly the reactor fuel modules and (b) direct the coolant through the core during all operating conditions. The components associated with the reactor internals and the material used in the fabrication of these components are shown in Table 4-I. Both the core support structures and the internal filler components are designed to withstand the forces due to weight and preloads, vessel motion due to earthquake or experiment dynamics, control rod motions, and coolant pressure differentials during normal operation as well as experimental blowdown. The construction of the reactor internals is in general

TABLE 4-I

CORE SUPPORT STRUCTURE MATERIALS

| Item | Component | Material |
|---|---|---|
| 1. | Reactor vessel filler blocks | Type 304L ss |
| 2. | Reactor vessel filler studs | Inconel 718 |
| 3. | Core filler pieces | Type 304L ss |
| 4. | Flow skirt | Type 304L ss |
| 5. | Core support barrel | Type 304L ss |
| 6. | Lower core support structure | Type 304L ss |
| 7. | Upper core support plate | Type 304L ss |
| 8. | Internals holddown spring | Inconel 718 |

conformity with the design, fabrication, and examination requirements of Section III of the ASME Code for Class 1 components.

RDT standards applied to the design and procurement of the core support structures are as follows:

| | |
|---|---|
| E 6-9T | Core Support Structure for Pressurized Water Reactors (Fabrication Only) |
| E 15-2T[a] | Requirements for Nuclear Components (Supplement to ASME Boiler and Pressure Vessel Code, Section III) |
| F 2-2T | Quality Assurance Program Requirements |
| F 3-6T | Nondestructive Examination |
| F 5-1T | Cleaning and Cleanliness Requirements for Nuclear Components |
| F 7-2T | Preparations for Sealing, Packaging, Packing, and Marking of Components for Shipment and Storage |
| F 7-3T | Requirements for Identification Marking of Reactor Plant Components and Piping |
| F 8-1T | Preloading Threaded Fasteners and Closures |

The reactor internals are designed to permit:

(1) The acquisition of data during LOCEs which evaluate the performance of ECCS

(2) The adequate cooling of the core following a LOCA

[a] RDT materials standards as listed in E 15-2T were used as appropriate.

(3) The insertion of the control rod elements during a LOCA.

In general, the reactor internals are fabricated of AISI Type 304L stainless steel. Exceptions are noted in Table 4-I. Only full-penetration welds were used on weld joints in primary structural members. Mechanical connections utilize fasteners which meet the requirements of RDT Standard M 6-2T, "Mechanical Locking Devices"[a], to preclude the possibility of incurring loose hardware within the vessel.

Numerous supports between the different internals components are provided to assure that free movement of control rods will be maintained. The scheme to prevent significant lateral bending or twisting of the fuel modules is summarized below:

(1) Fuel modules are supported against each other and off the core fillers.
(2) The core fillers are coupled to the flow skirt, which in turn is supported at the top and bottom against the core barrel.
(3) The core barrel is supported off the vessel filler assembly, which in turn is displacement-limited by supports between the filler assembly and the reactor vessel.

The reactor internals have been seismically analyzed[1] for the design basis earthquake (DBE). The analysis indicated that the components would satisfactorily withstand seismic loading of 0.8 g vertical and 1.6 g horizontal.

[a] Listed in RDT Standard E 15-2T.

The MTA has been dynamically analyzed using the seismic design criteria which specify a time-history method of seismic analysis as described in LTR 10-7[2]. This analysis method utilizes seismic input forcing functions which are derived from an ensemble of scaled strong-motion earthquake records. The analysis results[3] indicate that the peak acceleration experienced by the reactor vessel portion of the MTA would have seismic excitations of 0.4 g vertical and 0.2 g horizontal. Preliminary results of the final MTA structural analysis[4, 5] show that the MTA is capable of withstanding SSE seismic excitations.

4.1.2.4.2 Fuel Assemblies

The fuel assemblies are designed to:

(1) Have design features representative of commercial PWR fuel assemblies.

(2) Operate satisfactorily after exposure (at any time during the design lifetime) to conditions created by the plant upsets listed in Table 5-III.

(3) Maintain during the LOCA a definable and coolable heat transfer geometry and the ability to insert fully the control rods.

(4) Maintain specified structural characteristics during a LOCE decompression phase. (The design is similar to the current LPWR designs except for certain modifications to permit repeated use of the core for LOCEs such as stronger guide tubes, stronger guide tube attachments, unpressurized fuel rods, and shorter span between spacer grids.)

The design evaluation must consider the combined effects of coolant pressure, coolant temperature, internal fuel rod pressure, flow-induced vibration, hydraulic decompression loads, dragloads, irradiation effects on material properties, differential thermal expansion, thermal gradients in structural parts, fuel rod growth, material creep properties, stress ratcheting effects, corrosion deterioration of structural parts, and control rod deceleration. (The analyses to predict the response of the fuel assemblies will continue up until immediately prior to performance of LOCEs.)

The fuel assembly structural features include:

(1) Free-standing fuel rod cladding
(2) Control rod engagement in the control rod guide tubes at all times
(3) Spacer grid-fuel rod contact loads which (a) allow insertion of fuel rods without mechanical damage and (b) prevent fretting at the contact points and minimize fuel rod vibration
(4) Limited fuel assembly vertical motion during LOCE decompression phase.

4.1.2.4.3 Control Rod Assemblies

The CRAs which are used in the LOFT core have been designed to be similar to those used in an LPWR. The CRAs consist of 20 poison pins geometrically arranged (from a spider) to coincide with matching fuel assembly guide tubes. The poison material is 80 wt% Ag, 15 wt% In, and 5 wt% Cd, which is the same material for LPWR rod control.

The control rods are rigidly coupled to the spider by a threaded connection between the upper end fitting and the spider. Maximum conformity with the (guide tube) channels is provided by reducing the diameter of the upper end fitting to allow limited control rod flexibility (see Figure 4-1). The CRA is inserted through the upper end box of the fuel assembly, each control rod being guided by an in-core guide tube. A guide structure is also provided above the core so that full-length guidance of the control rod is provided throughout the stroke. With the reactor assembled, the CRA cannot be withdrawn far enough to cause disengagement of the control rods from the in-core guide tube.

CRAs similar to this design have been extensively tested at reactor temperature, pressure, and flow conditions under existing PWR programs. The absorber material is enclosed in stainless steel tubes to provide structural strength of the CRAs. These rods are designed to withstand all operating loads including those resulting from hydraulic forces, thermal gradients, and reactor scram deceleration. The cladding of the absorber section will also prevent corrosion and eliminate possible contamination of the primary coolant.

The LOFT CRA and control rods are shown in Figures 4-1 and 4-2, respectively.

4.1.2.4.4 Control Rod Drives

The control rod drive system utilized for LOFT was a spare system originally designed and built for eventual use on the NS Savannah. All pressure-containing components were originally designed to meet the requirements for Class A

vessels set forth in Section III of the ASME Code and the Marine Engineering Regulations (CG-115), 1959. The pressure boundary components were reanalyzed in accordance with the Class A vessel category of Section III of the ASME Code.

The control rod drives are of the roller nut type and provide CRA insertion and withdrawal rates consistent with the required reactivity changes for reactor operational load changes. This rate is based on the worth of the rod group which has been established to limit power-peaking flux patterns to design values. The insertion and withdrawal velocity has been established to be a nominal 2 in./min. Analyses described in Section 15.0 have shown that this rod speed is safe under all anticipated circumstances.

The control rod drives provide a "trip" of the CRAs which results in a rapid shutdown of the reactor for conditions that cannot be handled by the reactor control system. The trip is based on the results of various reactor transient analyses, including instrument and control delay times and the amount of reactivity that must be inserted before deceleration of the CRA occurs. The maximum travel time for 90% insertion on a trip command of a CRA has been established to be 2 sec.

The control rod drives can be coupled and uncoupled to their respective CRAs without any withdrawal movement of the CRAs.

Materials selected for the control rod drives are capable of operating within the specified reactor environment for the life of the mechanism without harmful effects. Adequate clearance is provided between the stationary and

moving parts of the control rod drives so that the CRA trip time to full insertion is not adversely affected by mechanical interference under all operating conditions and seismic disturbances.

Structural integrity and adherence to allowable stress limits of the control rod drive and related parts during a trip will be achieved by establishing a limit on impact loads through snubbing.

4.1.2.4.5 Fuel Module Instrumentation Penetrations (Including Support Arms)

The design of the fuel module instrumentation penetrations (including support arms) was based on the following:

(1) Stress limits are in accordance with the ASME Code for Class 1 vessels.

(2) The pressure boundary components are designed in accordance with the basic design parameters of the reactor vessel given in Table 5-V.

(3) The instrumentation penetration has been designed to perform its function during conditions which, in general, are typical of those at which LPWRs operate. It has also been designed to perform this function during the transient conditions imposed during the LOCE-ECC testing scheduled. These transient conditions were evaluated in accordance with Section III of the ASME Code. Transient conditions specified for the LOFT reactor vessel head are directly applicable for use in the analysis of the instrument penetration.

4.1.2.4.6 Fuel Module Upper Support Structures

The design of the upper support structures is based on the following considerations:

(1) The fuel module upper support structures are capable of withstanding the loads resulting from normal operating conditions (steady state and transient) and upset conditions including LOCEs, and will ensure the capability for safe reactor shutdown during faulted conditions, in particular a LOCA. The loads resulting from a DBE have been included. Specific loads which have been considered include hydraulic loads (primarily due to crossflow during normal operation and blowdowns), axial compressive loads due to spring preload, gravity loads during fuel handling conditions, seismic loads, and loads resulting from nonuniform temperature distributions such as during ECC injection.

(2) The fuel module upper support structures are designed to align properly with other components including the fuel assemblies, the upper core support plate, the reactor vessel closure head, the core barrel flow skirt, the control rods and control rod drive shaft (for control fuel assemblies), the fuel handling cask and refueling tool, and instrumentation.

## 4.2 Reactor Design

### 4.2.1 General Summary[6]

The important core design, thermal, and hydraulic characteristics are tabulated in Table 4-II.

### 4.2.2 Nuclear Design and Evaluation

The basic design of the core satisfies the following requirements:

(1) Sufficient excess reactivity is provided to achieve the design power level over the specified fuel life cycle.

TABLE 4-II

CORE DESIGN, THERMAL, AND HYDRAULIC DATA

| Item | Data |
|---|---|
| 1. Reactor | |
| a. Type | Pressurized water |
| b. Rated heat output, MW(t) | 55 |
| c. Vessel coolant inlet temperature, °F | |
| High flow ($3.6 \times 10^6$ lb/hr) | 557.0 |
| Low flow ($2.15 \times 10^6$ lb/hr) | 543.7 |
| d. Vessel coolant outlet temperature, °F | |
| High flow ($3.6 \times 10^6$ lb/hr) | 596.5 |
| Low flow ($2.15 \times 10^6$ lb/hr) | 610.0 |
| e. Average core outlet temperature, °F | |
| High flow ($3.6 \times 10^6$ lb/hr) | 598.0 |
| Low flow ($2.15 \times 10^6$ lb/hr) | 612.0 |
| f. Operating pressure, psig | 2250 |
| 2. Core and fuel assemblies | |
| a. Total number of fuel assemblies in core | |
| Standard 15 x 15 array | 5 |
| Special partial 15 x 15 (triangular) | 4 |
| b. Number of fuel rods | 1300 |
| c. Clad material | Zircaloy-4 (cold-worked) |
| d. Fuel rod outside diameter, in. | 0.422 |
| e. Fuel rod clad thickness, in. | 0.0243 |
| f. Fuel rod pitch, in. | 0.563 |
| g. Number of control assemblies | 4 |
| h. Number of control pins | 80 |
| i. Fuel assembly pitch spacing, in. | 8.466 |
| 3. Fuel | |
| a. Material | $UO_2$ |
| b. Form | Dished-end, cylindrical pellets |
| c. Diameter, in. | 0.3659 |
| d. Pellet length, in. | 0.6 |
| e. Density, % of theoretical | 93 |
| f. Active length, in. | 66 |

TABLE 4-II (contd.)

| Item | Data |
|---|---|
| 4. Heat transfer and fluid flow at rated power | |
| a. Total heat transfer surface in core, $ft^2$ | 789.93 |
| b. Average heat flux, Btu/hr-$ft^2$ | $2.28 \times 10^5$ |
| c. Maximum heat flux, Btu/hr-$ft^2$ | $5.51 \times 10^5$ |
| d. Average thermal output, kW/ft of fuel rod | 7.4 |
| e. Maximum thermal output, kW/ft of fuel rod (at rated power) (nominal) | 17.9 |
| f. Maximum clad surface temperature, °F | 662 |
| g. Average core fuel temperature, °F | 1542 (volume weighted) |
| h. Maximum fuel centerline temperature at hot spot, °F | 4350 |
| i. Total reactor coolant flow, lb/hr (high flow) | $3.6 \times 10^6$ |
| j. Core flow area (effective for heat transfer), $ft^2$ | 1.78 |
| k. Core coolant average velocity, fps (high flow) | 12.0 |
| l. Coolant outlet temperature at hot channel, °F (high flow) | 614 |
| 5. Power distribution | |
| a. Maximum/average power ratio, radial x local ($F_h$ nuclear) | 1.53 |
| b. Maximum/average power ratio, axial ($F_z$ nuclear) | 1.58 |
| c. Overall power ratio ($F_q$ nuclear) | 2.42 |
| d. Power generated in fuel and cladding, % | 96.0 |
| 6. DNB data at rated power | |
| a. DNBR at pretest, rated power (W-3) (nominal) | 1.58 |
| b. DNBR at full flow, rated power (W-3) (nominal) | 1.88 |

(2) Sufficient reactivity control is provided to permit safe reactor operation and shutdown at all times during the lifetime of the core.

### 4.2.2.1 Nuclear Characteristics of Design

#### 4.2.2.1.1 Nuclear Design Data

The nuclear design characteristics are given in Table 4-III. The excess reactivity values associated with various core conditions are listed in Table 4-IV (see Section 4.1.2.2, item (1)).

TABLE 4-III

NUCLEAR DESIGN DATA

| Item | Data |
|---|---|
| 1. Fuel[a] | 0.332/0.330 |
| 2. Moderator[a] | 0.559/0.561 |
| 3. Zircaloy[a] | 0.096/0.095 |
| 4. Gap (fuel pellet to clad)[a] | 0.014/0.013 |
| Total of volume fractions | 1.001/0.999 |
| 5. Total $UO_2$ (BOL, Core I), lb | 3250 |
| 6. Core dimension | |
| a. Equivalent diameter, in. | 24.12 |
| b. Active height, in. | 66.0 |
| c. Unit cell $H_2O/UO_2$ atomic ratio (core) | |
| 68°F | 1.68 |
| 540°F | 1.70 |
| 7. Full-power lifetime, hr | 2000 |
| 8. Fuel irradiation, MWd/MTU of $UO_2$ | 2992 |
| 9. Fuel enrichment, at. % U-235 | 4.05 |
| 10. Control data | |
| a. Control rod material | 80% Ag, 15% In, 5% Cd |
| b. Number of CRAs | 4 |
| c. Total rod worth (540°F/68°F), $\%\Delta\rho$ | 15.6/11.4 |
| d. Control rod cladding material | Type 304 ss |

[a] Unit cell volume fractions (68°F/540°F).

Two reactivity control systems are employed in the LOFT reactor design. These systems include the use of control rods and soluble boron concentration control. Since these control systems are independent, they satisfy Criterion 26 in Appendix 1-A.

TABLE 4-IV

CORE MULTIPLICATION FACTORS FOR VARIOUS CONDITIONS

| Item | Description | $k_{eff}$ |
|---|---|---|
| 1. | Cold, no power, clean | 1.25 |
| 2. | Hot, no power, clean | 1.16 |
| 3. | Hot, rated power, Xe and Sm equilibrium | 1.07 |
| 4. | Cold, single fuel assembly[a,b] | 0.86 |

[a] The minimum critical mass, with and without xenon and samarium poisoning, may be specified in a variety of forms; e.g., single assembly, multiple assemblies in various geometrical arrays, damaged or crushed fuel assemblies, etc. The unit fuel assembly with a center-to-center spacing of 21.5 in. is subcritical.

[b] A center-to-center assembly pitch of 21.5 in. is required for this $k_{eff}$ in cold, nonborated water with no Xe or Sm; fuel enrichment was 4.05 at. %.

4.2.2.1.2 Reactivity Control Distribution

The various excess reactivity requirements and manner of meeting these requirements are listed in Table 4-V.

4.2.2.1.3 Reactivity Shutdown Analyses

The ability to shut down the core under both hot and cold conditions is illustrated in Table 4-VI.

Examination of Table 4-VI for minimum hot shutdown margin (item 4) shows that with the highest worth CRA stuck out, the core can be maintained in a subcritical condition. Normal conditions indicate a minimum hot shutdown margin of 11.8% $\Delta\rho$ at beginning of life (BOL). Thus, the combined reactivity control systems design satisfies Criterion 27 in Appendix 1-A.

Under conditions where a cooldown to ambient temperature is required, concentrated soluble boron will be added to the reactor coolant to assure a minimum shutdown margin of 1% $\Delta\rho$.

TABLE 4-V

REACTIVITY CONTROL DISTRIBUTION

| Item | % Δρ |
|---|---|
| 1. Controlled by soluble poison[a] | |
| a. Moderator temperature defect 68° to 540°F | 6.6 |
| b. Equilibrium xenon and samarium | 3.8 |
| c. Fuel burnup and fission product buildup | 6.8 |
| | 17.2 |
| 2. Controlled by movable CRAs[b] | |
| a. Doppler and moderator deficit (0 to 100% rated power) | 2.5 |
| b. Operating band | 0.3 |
| c. Shutdown margin | 1.0 |
| Total movable control required | 3.8 |
| 3. Available CRA[c] | |
| a. Total CRAs worth (hot/cold), % Δρ | 15.6/11.4 |
| b. Stuck rod worth (hot/cold), % Δρ | 6.0/4.3 |
| c. Worth of three CRAs (hot/cold), % Δρ | 9.6/7.1 |

[a] Soluble boron: boron in solution is used to control the following relatively slow-moving reactivity changes:

(1) The moderator reactivity defect in going from ambient temperatures (68°F) to a hot condition (540°F). The value from ambient to 540°F is the maximum change which would occur.

(2) Equilibrium xenon and samarium. This slow transient can be completely compensated for by the boron dilution system.

(3) The excess reactivity required for fuel burnup and fission product buildup throughout the core lifetime can be held down by the boron addition system.

[b] Controlled by movable CRAs:

(1) The Doppler and moderator temperature deficit results from changes in the average fuel temperature. These changes are rapid and therefore will be compensated for by the CRAs.

(2) Operating band. Small reactivity changes by the CRAs may be necessary to compensate for inaccuracies in boron addition and dilution; this is the maneuvering band.

(3) A shutdown margin of 1% Δρ from hot operating condition to hot standby condition is required as part of the movable CRAs.

TABLE 4-V (contd.)

[c] Rod worth: A total of 2.8% $\Delta\rho$ is required in movable control rod worth, not including 1% $\Delta\rho$ shutdown margin. Analysis using 4.05-at. % enriched fuel predicts a total rod worth (four CRAs) of 15.6% $\Delta\rho$ for hot zero-power conditions and 11.4% $\Delta\rho$ for cold conditions. The stuckout CRA worth has been evaluated to be 9.6% $\Delta\rho$ for hot zero power and 7.1% $\Delta\rho$ for cold conditions. The minimum available (see Table 4-VI) CRA worth of 9.3% $\Delta\rho$ hot zero power and 7.1% $\Delta\rho$ for cold conditions (as shown in this table) is sufficient to meet all movable control requirements.

The reactivity changes which take place between the hot-zero-power-to-cold conditions are tabulated in Table 4-VII, along with the corresponding changes in boron concentration. In addition, the inverse boron worth values for the hot and cold reactor conditions are listed. The conditions shown with no CRAs illustrate the maximum requirements.

4.2.2.1.4 Reactivity Coefficients

Reactivity coefficients are used in hybrid and digital computer studies of normal and abnormal reactor operating conditions. These coefficients have been investigated as part of the analysis of the LOFT Core I and are described as to function and overall range of value. As is shown in the following sections, the overall moderator coefficient and the Doppler reactivity coefficients are negative. Thus, the reactivity inherent protection satisfies Criterion 11 in Appendix 1-A.

A. Doppler Coefficient

The Doppler coefficient reflects the change in reactivity as a function of fuel temperature. A rise in fuel temperature results in

TABLE 4-VI

SHUTDOWN REACTIVITY ANALYSIS

| Item | Reactivity Effects (% Δρ) | Beginning of Life (% Δρ) | (ppm) |
|---|---|---|---|
| 1. | Maximum shutdown CRA requirement | | |
| | a. Doppler and moderator deficit (100-0% power) | 2.5 | - |
| | b. Shutdown margin | 1.0 | - |
| | Total | 3.5 | - |
| 2. | Maximum available CRA worth (hot) | 15.6 | - |
| | Operating band | 0.3 | - |
| 3. | Minimum available CRA worth | | |
| | a. All CRAs in | 15.3 | - |
| | b. One CRA stuck out | 9.3 | - |
| 4. | Minimum hot shutdown margin | | |
| | a. All CRAs in | -11.8 | - |
| | b. One CRA stuck out | - 5.8 | - |
| 5. | Minimum available CRA worth (cold) | | |
| | a. All CRAs in | 11.4 | - |
| | b. One CRA stuck out | 7.1 | - |
| 6. | Shutdown worth with 3000 ppm boron | | |
| | a. Cold | 30 | - |
| | b. Hot | 24.2 | - |
| 7. | ppm boron addition required (cold) for $k_{eff} = 0.99$ | | |
| | a. All CRAs out | - | 2100 |
| | b. All CRAs in | - | 960 |
| | c. One CRA stuck out | - | 1390 |

TABLE 4-VII

SOLUBLE BORON CONCENTRATIONS AND WORTHS

| Item | Core Conditions[a] | Beginning of Life Boron Concentration (ppm) | Beginning of Life Boron Worth (ppm/% Δρ) |
|---|---|---|---|
| 1. | Cold, $k_{eff}$ = 0.99 | | |
| | a. No CRAs in | 2100 | — |
| | b. All CRAs in | 960 | — |
| | c. One stuck CRA | 1390 | — |
| 2. | Hot, zero power, $k_{eff}$ = 0.99 | | |
| | a. No CRAs in | 1800 | — |
| | b. All CRAs in | 0 | — |
| | c. One stuck CRA | 610 | — |
| 3. | Hot, rated power, $k_{eff}$ = 1.0 | | |
| | No CRAs in | 1330 | — |
| 4. | Hot, equilibrium Xe and Sm, rated power, $k_{eff}$ = 1.0 | | |
| | No CRAs in | 860 | — |
| 5. | Hot (540°F) boron worth (100-2200 ppm) | - | 124 |
| 6. | Cold (68°F) boron worth (100-2200 ppm) | - | 100 |

[a] Approximate values for 4.05-at. % enriched fuel.

an increase in effective absorption cross section of the fuel (the Doppler broadening of the resonance peaks) and a corresponding reduction in neutron production. The range of the Doppler coefficient in going from cold conditions to hot operating conditions is $-1.50 \times 10^{-5}$ Δρ/°F to $-1.00 \times 10^{-5}$ Δρ/°F. As indicated in 4.3.1.1.2.D, these values will

be verified by tests during early reactor operations.

B. Moderator Void Coefficient

The moderator void coefficient relates the changes in neutron multiplication to the presence of voids in the moderator. The coefficient normally calculated is a uniform moderator void coefficient, i.e., the voids are assumed to be uniformly distributed within the moderator. Some large power reactors exhibit a positive void coefficient for very small void levels; however, LOFT Core I does not exhibit this characteristic, and the void coefficient is always negative. This can be attributed to the small diameter of the core and the resulting relatively high neutron leakage. The expected range for the average void coefficient for BOL conditions (1440 ppm boron) and 0 to 50% voids is $-1 \times 10^{-3}$ to $-5.72 \times 10^{-3}$ $\Delta\rho/\%$ void.

C. Moderator Pressure Coefficient

The moderator pressure coefficient relates the change in moderator density, resulting from reactor coolant pressure change, to the corresponding effect on neutron production. This coefficient is opposite in sign and considerably smaller, at least an order of magnitude, when compared with the moderator temperature coefficient. The anticipated value for this coefficient at BOL is $+5.0 \times 10^{-6}$ $\Delta\rho$/psi.

D. Moderator Temperature Coefficient

The moderator temperature coefficient relates a change in neutron multiplication to the change in reactor coolant temperature. The major temperature effect on the coolant is a change in density. An increase in reactor coolant temperature will produce a decrease in water density and an equal percentage change in boron concentration. This boron concentration change will, for an LPWR, normally produce a positive reactivity change at high boron concentrations. However, the LOFT Core I is a high-leakage system, and therefore, the effect of the density change is negative even at relatively high boron concentrations.

The moderator temperature coefficient has been parameterized for the LOFT Core I in terms of boron concentration and reactor coolant temperature. The results of this parameterization are shown in Table 4-VIII and plotted in Figure 4-3. Table 4-VIII shows the coefficient variation from ambient to operating temperature (average) as a function of soluble boron concentration. The anticipated operating value is $-3.2 \times 10^{-4}$ $\Delta\rho/°F$ at BOL conditions (1313 ppm boron). Figure 4-3 shows the uniform moderator temperature coefficient as a function of average coolant temperature for various boron concentrations.

4.2.2.2 Nuclear Design Evaluation

The evaluation of the nuclear design characteristics will be accomplished through a series of zero-, low-, and

high-power physics measurement programs (see Section 4.3).

### 4.2.3 Thermal-Hydraulic Design and Evaluation

#### 4.2.3.1 Thermal and Hydraulic Characteristics of Design

##### 4.2.3.1.1 Design Data

The core is designed to operate safely at heat fluxes less than the CHF for the following conditions:

(a) Reactor power - 107% of nominal
(b) Radial (design) physics factor - 1.61
(c) Axial (design) physics factor - 1.65
(d) Fuel rod diameter - 0.001 over nominal, 0.423 in.
(e) Fuel rod minimum pitch - 0.002 under minimum nominal, 0.561 in.
(f) Core flow less than nominal - 3%
(g) Underpressure error - 45 psi
(h) Core inlet coolant temperature error - 4°F.

The use of the values in the thermal-hydraulic analysis results in conservative predictions, e.g., the use of radial and axial peaking factors of 1.61 and 1.65, respectively, rather than nominal values of 1.53 and 1.58 resulting in a lower predicted DNBR.

##### 4.2.3.1.2 Heat Transfer Correlation

The CHF correlations used for design at present include both the W-3 and B&W-2 relationships. The W-3 correlation consistently predicts lower (more conservative) CHF values than does the B&W-2 correlation. When referencing CHF or DNB ratios, both values are given as: W-3/B&W-2.

TABLE 4-VIII

UNIFORM REACTOR TEMPERATURE COEFFICIENT[a]

| Item | Range (°F) | $T_{ave}$ (°F) | Average Change in Reactivity per Unit Change in Temperature (% Δρ/°F) | | | |
|---|---|---|---|---|---|---|
| | | | 100 ppm | 800 ppm | 1500 ppm | 2200 ppm |
| 1. | 68-200 | 134 | $-0.61 \times 10^{-2}$ | $-0.49 \times 10^{-2}$ | $-0.30 \times 10^{-2}$ | $-0.15 \times 10^{-2}$ |
| 2. | 200-300 | 250 | $-0.90 \times 10^{-2}$ | $-0.75 \times 10^{-2}$ | $-0.50 \times 10^{-2}$ | $-0.30 \times 10^{-2}$ |
| 3. | 300-400 | 350 | $-1.35 \times 10^{-2}$ | $-1.07 \times 10^{-2}$ | $-0.77 \times 10^{-2}$ | $-0.50 \times 10^{-2}$ |
| 4. | 400-450 | 425 | $-1.80 \times 10^{-2}$ | $-1.40 \times 10^{-2}$ | $-1.03 \times 10^{-2}$ | $-0.70 \times 10^{-2}$ |
| 5. | 450-500 | 475 | $-2.20 \times 10^{-2}$ | $-1.70 \times 10^{-2}$ | $-1.30 \times 10^{-2}$ | $-0.90 \times 10^{-2}$ |
| 6. | 500-550 | 525 | $-2.80 \times 10^{-2}$ | $-2.10 \times 10^{-2}$ | $-1.65 \times 10^{-2}$ | $-1.20 \times 10^{-2}$ |
| 7. | 550-610 | 580 | $-4.50 \times 10^{-2}$ | $-3.68 \times 10^{-2}$ | $-3.00 \times 10^{-2}$ | $-2.17 \times 10^{-2}$ |

[a] Includes fuel temperature (Doppler) reactivity effect.

The W-3 correlation is given below.

$$\frac{q''_{DNB,\ Eu}}{10^6} = [(2.022 - 0.0004302p) + (0.1722 - 0.0000984p)e^{(18.2 - 0.004129p)X}]$$
$$\times [1.037 + \frac{G}{10^6}(0.1484 - 1.596X + 0.1729X|X|)] \times [1.157 - 0.869X]$$
$$\times [0.2664 + 0.8357e^{-3.151De}]$$
$$\times [0.8258 + 0.000794\ (H_{sat} - H_{in})]$$
$$\text{Btu/hr-ft}^2. \qquad (4\text{-}1)$$

where

$q''$ DNB, Eu = equivalent uniform heat flux, Btu/hr-ft$^2$

System pressure, p = 1000 to 2300 psia

Mass velocity, $G = 1.0 \times 10^6$ to $5.0 \times 10^6$ lbm/hr-ft$^2$

Equivalent diameter, $D_e$ = 0.2 to 0.7 in.

Local quality, $X = -0.16$ to $+0.15$

Inlet enthalpy, $H_{in} \geq 400$ Btu/lb

Length, L = 10 to 144 in.

$\frac{\text{Heated Perimeter}}{\text{Wetted Perimeter}}$ = 0.88 to 1.00.

This correlation is used with the nonuniform flux factor (F), where $q''$ DNB, Nu is the nonuniform heat flux. The factor is defined as

$$F = \frac{q''_{DNB,\ Eu}}{q''_{DNB,\ Nu}} = \frac{C\ \ell_{DNB}\ q(z)\ \text{Exp}\ [-C(\ell_{DNB}-z)dz}{q''_{local} \times [1 - \text{Exp}\ (-C\ \ell_{DNB,\ Nu})]} \qquad (4\text{-}2)$$

where

$$C = 0.44\ (1-X_{DNB})^{7.9}/(G/10^6)^{1.72}$$

$\ell_{DNB}$ = distance from inception of local boiling to the point of DNB

z = distance from the inception of local boiling, measured in direction of flow.

The W-3 correlation is multiplied by a spacer factor[7] as given below.

$$F_s = 1.0 + 0.03\ (G/10^6)\ \left(\frac{TDC}{0.019}\right)^{0.35} \qquad (4\text{-}3)$$

where

G = mass flow, lb/hr-ft$^2$

TDC = thermal diffusion coefficient. (A value of 0.06 is being used for TDC.)

The B&W-2 CHF correlation[8] is as follows:

$$q''_{CHF,\ Eu} = (1.15509 - 0.40703\ D_e)\ \{0.37020 \times 10^8\ (0.59137 \times 10^{-6} G)^{[0.83040 + 0.6847 \times 10^{-3}\ (p-2000)]} - 0.15208G\ \chi_{CHF}\ h_{fg}\}\ [12.710\ (0.30545 \times 10^{-5} G)^{[0.71186 + 0.20729 \times 10^{-3}\ (p-2000)]}, \text{ Btu/hr-ft}^2. \qquad (4\text{-}4)$$

where

System pressure, p = 2000 to 2400 psia

Mass flow, G = $0.75 \times 10^6$ to $4 \times 10^6$ lb/hr-ft$^2$

Equivalent diameter, $D_e$ = 0.2 to 0.5 in.

Steam quality at CHF point, $\chi$ = -0.03 to 0.20

Length, L = 72 in.

The nonuniform flux factor for the B&W-2 correlation is used by

$$F = \frac{q_{CHF,\ Eu}}{q_{CHF,\ Nu}} = \frac{1.0/0.97553}{q''_{Nu}\ (1-e^{-CL_{CHF}})} \int_{o}^{L_{CHF}} [q''(z)]e^{-C(L_{CHF}-z)}dz$$

$$C = 0.24867 \frac{(1-\chi_{CHF})^{7.82293}}{(G/10^6)^{0.45758}}. \qquad (4\text{-}5)$$

where

Mass flow, $G = 1 \times 10^6$ to $3.5 \times 10^6$ lb/hr-ft$^2$

Absolute pressure, $p = 2000$ to 2400 psia

Steam quality at CHF location, $\chi_{CHF} = 0.02$ to 0.25

Enthalpy-evaporization, $h_{fg}$ = Btu/lb

Heat flux nonuniform, $q''_{Nu}$ = Btu/hr-ft$^2$

Axial location of CHF, $L_{CHF} = 72$ in.

Equivalent diameter, $D_e = 0.2$ to 0.5 in.

Heat flux at location, $q''(z)$ = Btu/hr-ft$^2$.

The spacer factor is not used with the B&W-2 correlation. The heat transfer correlations used for the other heat transfer regions preceding CHF are the Thom nucleate boiling correlation for the region of fully developed boiling

$$\Delta T_{sat} = 0.072\ q^{0.5} e^{-P/1260}\ {}^{\circ}F$$

and the Dittus-Boelter relationship was used in the forced convection heat transfer region.

$$N_{Nu} = 0.023\ (N_{Re})^{0.8}\ (N_{Pr})^{0.4}$$

where $N_{Nu}$, $N_{Re}$, and $N_{Pr}$ are the Nusselt, Reynolds, and Prandtl numbers, respectively.

4.2.3.1.3 Engineering Hot Channel Factors

The enthalpy rise factor for the hot channel is computed using the COBRA[9] code. Figure 4-4 shows the COBRA model used to determine the enthalpy rise in 26 channels of a one-eighth section of the center core fuel assembly. Channel 9 is the hot channel in the core.

Rod diameter and pin pitch variations of 0.001 and 0.002 in., respectively, were used for the four rods which would make up the hot channel. It was assumed that variations from the nominal positions were such that the flow area of the hot channel was reduced. Hot channel factors not included were the moderator heatup factor, hot spot nuclear engineering heat flux factor, rod bowing factor, inlet flow maldistribution factor, and the effect of the instrumentation. DNB tests have been performed to determine the actual DNB under LOFT operating conditions. Evaluation of test results is not yet complete.

4.2.3.1.4 Fuel and Cladding Thermal Conditions

Two digital computer codes, THETA1-B[10] and TOODEE[11], are used to calculate the radial and axial fuel and cladding temperatures. The programs use radially varying volumetric heat generation as shown in Figure 4-5. The fuel thermal conductivity is varied as a function of temperature. The thermal conductivity of the fuel is shown in Figure 4-6 [12]. Figure 4-7 shows the cladding thermal conductivity as a function of temperature [13,14]. The heat capacity of the fuel (used for transient runs) is shown in Figure 4-8. The heat capacity

of the cladding is essentially constant, and a value of 0.086 Btu/lb-°F is used out to 1584°F.

The heat transfer across the gap between the fuel and cladding is accounted for by conduction through helium. The gap thickness changes with expansion of the fuel and cladding. The thermal conductivity of helium as a function of temperature is given by:

$$k_{He} = 3.1264 \times 10^{-3} \ (T_{He})^{0.5374} \quad (4\text{-}6)$$

where $T_{He}$ is the average temperature of the helium gas in °F.

The equation for the expansion of fuel is given by Equation (4-7) and of cladding by Equation (4-8) as a function of temperature[10,11].

$$Exp_{(UO_2)} = 3.718 \times 10^{-6} + 1.787 \times 10^{-9} T \quad (4\text{-}7)$$

$$Exp_{(Zr\text{-}4)} = 3.10 \times 10^{-6} + 0.975 \times 10^{-9} T \quad (4\text{-}8)$$

where T is the temperature in °F.

When the fuel contacts the clad, a value of 5400 Btu/hr-ft$^2$-°F is used as a contact heat transfer coefficient.

Using the aforementioned relationships, the maximum cladding surface temperature is 662°F at a system pressure of 2250 psia.

4.2.3.2 Thermal and Hydraulic Evaluation

4.2.3.2.1 DNBRs for Steady State

The DNBRs for nominal conditions at full-flow and low-flow conditions are as follows:

Full flow - 1.88/2.18[a], low flow - 1.58/1.90[a].

4.2.3.2.2 DNBRs for Transients

Evaluation of DNBR under transient conditions is presented in Section 15.2. The loss of pump power (flow coastdown) has been determined to be a worse transient than a steam-valve-fail-closed incident or rod withdrawal transient. A 91% probability that DNB will not occur under worst-transient conditions, using the W-3 CHF correlations, is anticipated (see Section 15.2.6).

4.2.4 Mechanical Design and Evaluation

4.2.4.1 Reactor Internals[15]

The reactor core internal assemblies consist of the core support barrel, upper core structure, lower core support structure, flow skirt-core fillers, instrument head filler, and upper and lower reactor vessel filler assemblies (see Figure 4-9).

These reactor internals are designed (a) to support and position properly the reactor fuel modules and (b) to control and direct coolant flow through the core during normal operation and expected LOCE conditions. Reactor vessel filler assemblies are designed to occupy space within the reactor vessel and displace excess coolant which could otherwise be detrimental to the credibility of the LOCE test results.

The core support structures are designed to withstand the thermal stress due to gamma heating as well as fast neutron flux damage.

The core support structures[15] are designed to withstand the forces due to weight and preloads, vessel motion due to earthquake or experimental dynamics, control rod

[a] DNB values are based on W-3/B&W-2 correlations.

motions, and coolant pressure differentials during normal operation as well as experimental blowdowns. This design satisfies Criterion 2 in Appendix 1-A.

All major components of the reactor internals and fillers are fabricated from AISI Type 304L stainless steel. Welded connections are used wherever feasible with full-penetration-design joints to develop full strength of the joined members. Mechanical connections utilize fasteners to meet the requirements of RDT Standard M 6-2T to preclude the possibility of incurring loose hardware within the vessel. The internals are designed and fabricated in accordance with the criteria for Class 1 nuclear components established in Section III of the ASME Code as supplemented by RDT Standard E 15-2T. These design and fabrication standards satisfy Criterion 1 in Appendix 1-A.

4.2.4.1.1 Core Support Barrel

The core support barrel is a major structural support and flow control member within the reactor vessel. It supports the reactor core within the vessel and separates the inlet coolant from the outlet coolant inside the vessel. In the upper region of the reactor vessel, the heavy flange portion of the barrel also serves to displace excess coolant from the outlet plenum and as a mounting for the reactor vessel fillers as shown in Figure 4-10.

The core support barrel is a single structure consisting of a thick, heavy flange section at the top and a long cylindrical barrel extending downward below the flange.

The heavy flange section of the core support barrel is about 60 in. OD, 30 in. ID, and 20 in. long. This heavy cylinder-flange is stepped to rest on a ledge just below the

vessel flange. The flange section is sized to partially fill the vessel outside the fuel assembly structure envelope and has clearance openings for the eight instrumentation penetrations and conduits. The inside of the heavy flange has a counterbore to accommodate the upper core support structures. The seating force to maintain the core support barrel on the vessel flange during all expected operations is provided by the internals holddown spring, acting through the upper core support structure plate and against the vessel instrument head.

The core support barrel cylinder section extends below the heavy flange section about 14-1/2 ft to just below the reactor core. The cylinder is 30 in. ID with a 1-1/2-in. wall thickness. Two nozzles extend from the cylinder diametrically opposite each other in alignment with the outlet nozzles of the reactor vessel. The nozzle lengths are sized to have installation clearance during cold assembly but to nearly close the gap at operating temperature due to differential expansion with the reactor vessel.

The extreme lower end of the cylinder has a reduced inside diameter to provide an interior lower support flange, which positions and supports the lower core support structure. The lower core support structure is seated on the core support barrel flange by the combined preloads of the reactor fuel assemblies and the flow skirt-core filler assembly.

Bearing rings are located at four elevations on the outside of the core barrel cylinder. These rings are located opposite matching pads

on the inside diameter of the reactor vessel filler (in the downcomer region) and serve to center the core barrel in the downcomer during all operating conditions.

Downward vertical loads on the reactor core, lower core support structure, flow skirt-core filler assembly, and core barrel structure are transmitted directly to the vessel ledge through the core support barrel flange. Upward loads are transmitted to the vessel head via the upper core support structures and the internals hold-down spring.

Lugs attached to the lower vessel filler block project inward, extending beneath the bottom of the core support barrel, to limit the vertical core movement downward in the event of core support barrel failure.

The core support barrel forms the inside surface of the annular downcomer and serves to separate inlet from outlet coolant within the reactor vessel. The inside diameter of the vessel filler assembly forms the outer surface of the annular downcomer at and below the vessel coolant nozzles. A flow skirt-core filler assembly located and supported inside the core support barrel acts as a reactor core envelope by filling the vertical space segments between the circular core support barrel and the fuel assemblies.

The core support barrel serves as the outside of the cylindrical outlet plenum volume above the core.

4.2.4.1.2 Upper Core Support Structure

The upper core support structure assembly consists of the upper core support plate assembly

and the internals holddown spring and shim plates.

The Type 304 stainless steel upper core support plate is about 39 in. in diameter and 7 in. thick, and has the flow skirt holddown spring assemblies attached. An opening 9 in. square through its center allows replacement of the center fuel assembly without removal of this plate. Four circular holes are located in the plate for passage of control rod shafts and couplings. The plate has a 4-in.-deep relief about its perimeter to receive the internals holddown spring.

The flow skirt holddown spring assemblies are shrouded coil spring and plunger modules attached to the underside of the plate. These modules extend about 11 in. below the plate, where they bear on the top of the uppermost flow skirt section and provide the holddown preload for the flow skirt-core filler assembly. The springs and some module components are fabricated from Inconel 718 material.

The upper core support plate assembly fits into a recess on the inside of the core support barrel flange. It is located by four radial keys and is drawn close to seated position (against fuel assembly and flow skirt preloads) by eight bolts into the core barrel flange. These shoulder bolts are unloaded by the seating force of the internals holddown spring when the instrument head is installed. The internals holddown spring is a Belleville-type spring, about 39 in. OD, 25 in. ID, and 2.00 in. thick. Flat backup shim plate washers which are used above and below the spring are fabricated from Inconel 718

material. The spring bears on the underside of the reactor vessel instrument head. Installation of the head compresses the spring and generates the holddown force.

4.2.4.1.3 Lower Core Support Structure

The lower core support structure is a multiple-plate assembly seated in the bottom of the core support barrel which (a) positions and supports the reactor core and (b) distributes coolant flow to the fuel assemblies.

The lower core support assembly is made up of upper, intermediate, and lower plates, connected by columns and an enveloping cylinder. The structure is preassembled and thereafter handled as a unit. It is located and supported by a close-fitting engagement with a recess in the core support barrel lower internal flange. Proper orientation is maintained by guide pins between mating surfaces. The assembly is held down in place in the core support barrel by the spring-loaded flow skirt. The complete lower core support assembly can be lifted up and out of the core support barrel after the fuel and the three sections of the flow skirt-core filler assembly have been removed.

The upper, or core mounting, plate is attached to the lower support plate by a cylindrical shell at the perimeter and by 12 columns throughout the central region. The intermediate, or diffuser, plate is located between the other plates by a step and compression sleeves on the connecting columns. The diffuser plate is not attached to the shell structure.

The upper, or core mounting, plate is 1-1/2 in. thick and has 24 coolant flow distribution holes, which are aligned with the lower end fittings of the fuel modules. Each of the five full-size, square, 15 x 15 fuel modules receives coolant through four holes, while each of the four triangular fuel assemblies is served by a single, larger hole.

The fuel modules rest directly on the upper plate and are positioned laterally by two pins in each fuel assembly. Columns between the upper and lower plates provide the necessary stiffness for core support and distribute the load between the upper and lower plates. The 1-in.-thick (intermediate) diffuser plate, with a hole pattern different from both the upper and lower plates, acts as a diffuser to improve distribution of coolant to the core. This diffuser plate is supported by the 12 columns and has a narrow annular coolant flow path around the plate, in addition to holes through the plate.

The lower core support plate provides the major structural strength and stiffness for the assembly. The plate is 4.19 in. thick and has a 29-7/8-in. OD. Support for the core mounting plate is from the lower plate through the 12 internal columns and the cylindrical shell along the entire perimeter.

Coolant passages through the lower plate consist of a 6-in.-square opening located below each square fuel assembly and a 3.9-in.-diameter hole beneath the triangular fuel assemblies. The lower outside diameter of the lower plate is machined to engage and bear on the internal flange at the bottom of the core support barrel.

#### 4.2.4.1.4 Flow Skirt-Core Filler Assembly

The flow skirt-core filler assembly consists of upper, intermediate, and lower subassemblies which stack vertically, forming a structure lining the entire length of the core support barrel. Each subassembly is a permanently assembled length of flow skirt cylinder and core filler pieces. The assembly serves to (a) channel coolant flow through the fuel assemblies and minimize bypass flow, (b) provide thermal shielding for the core support barrel, and (c) displace excess coolant from the core and outlet plenum regions.

The flow skirt sections are cylindrical shells, 0.875 in. thick and about 5 ft long. The uppermost section is slotted to a depth that allows clearance for the two flux-scanning tubes extending from the outlet plenum to the penetration locations. Spring preload cells, extending downward from the upper core support structure, bear down on the enlarged top end of the upper flow skirt. This preload is sized to seat and maintain the flow skirt-core filler assembly and lower core support structure in position within the core support barrel.

Core filler segments are permanently attached to the inside of the flow skirt shell pieces. The filler occupies the volume between the inside of the flow skirt cylinder and the fuel assembly envelope. Coolant flow channels are provided between the flow skirt and the filler pieces, as well as between thicker sections of the filler, to limit the temperature rise in this assembly due to nuclear heating. Coolant enters these flow channels from below and flows upward, bypasses

the core, and enters the upper plenum just below the elevation of the outlet nozzles. Metering of this flow is by orifices in the lower core support structure which channel coolant to the filler inlet region.

Filler material with the same cross section as that in the core regions extends up most of the length of the outlet plenum. This is essentially an extension of the core filler assembly. Thus, the core section envelope is continued upward to just below the outlet nozzle-flow port region where the filler is cut away. These fillers are permanently attached to the flow skirt shell pieces, as they are in the core region and displace excess coolant from the outlet plenum.

4.2.4.1.5 Instrument Head Filler

An instrument head filler is located within the opening through the center of the reactor vessel instrument head. This Type 304L stainless steel assembly, which displaces about 3 $ft^3$ of coolant, has openings for the center fuel assembly structure and for the four control rod drive shafts. The filler piece is mounted to the upper core support plates by studs extending through the filler. Stud fasteners are accessible from above, through the vessel closure head opening. This piece may be left in place during replacement of the center fuel module, but it must be removed with the upper core support structure for the removal of any other fuel module. This filler piece could be removed if tests with an enlarged coolant inventory in the cooler upper region of the outlet plenum were desired.

#### 4.2.4.1.6 Reactor Vessel Fillers

Reactor vessel fillers are required to displace excess coolant from the inlet, downcomer, and outlet regions of the LOFT reactor vessel, since the vessel is designed to accept a wide range of core lengths and L/Ds. Solid Type 304L stainless steel filler material is used to occupy the annular volume between the core support barrel and the reactor vessel wall.

The filler assembly extends nearly the full length of the reactor vessel from the underside of the core support barrel flange to the bottom of the vessel. The filler assembly is made up of upper and lower assemblies which are attached to the core support barrel flange by studs that extend through the flange and are accessible from above the flange. Separate sets of studs are used to suspend the upper and lower filler assemblies from the same flange so that the two subassemblies can be separated to facilitate installation and removal. The upper assembly extends down to just below the vessel nozzles, whereas the lower assembly extends on down to near the vessel bottom. Together, these filler assemblies are about 18 ft high and displace a total of about 196 $ft^3$ of coolant. Total filler dry weight is about 98,000 lb. Both upper and lower filler assemblies are about 57.2 in. OD, which provides a nominal 0.25-in. clearance with the inside of the reactor vessel.

A 2.0-in. gap between the core support barrel and the inside diameter of the filler provides an annular downcomer channel for inlet coolant to the lower plenum beneath the core.

In the nozzle region, openings are located in the upper filler assembly for (a) two outlet nozzle tubes on the core support barrel, (b) two inlet flow channels aligned with vessel inlet nozzles, and (c) two ECC injection nozzles. The inlet and ECC flow channels through the filler terminate in an enlarged annulus on the inside of the fillers, above, between, and immediately below the nozzles. This enlarged annulus is about 3.5 in. wide and 30 in. high. It is a distributor channel which links the diametrically opposed inlet nozzle openings, connects with the ECC injection ports, and distributes the normal coolant flow around the core support barrel to the top of the downcomer annulus.

The upper filler assembly, comprising about 15% of the total vessel filler, is a two-piece longitudinally split subassembly bolted to the underside of the core support barrel flange. The filler piece is about 3 ft long and extends down to a point just below the vessel nozzles. The nozzle openings and the flow distributor annulus are formed by openings and cutouts in this assembly.

The annular subassembly is installed by fitting 180° segments radially around the core support barrel into the region between the core support barrel flange and the outlet nozzles. The tie bolts, installed through the flange, secure the assembly to the core barrel flange. These bolts are tensioned with sufficient preload to prevent separation of the filler from the flange under any expected conditions. After the upper filler is installed on the core support barrel, it is considered a semipermanent part of the core support barrel.

The lower filler assembly is made up of five separate, annular rings stacked together totaling 15 ft in length and comprising 85% of the total reactor vessel filler. This assembly is held together by tensioned tie bolts (studs) between rings in such a way that all five pieces are secured together as a single unit. The assembly is equipped with handling fittings and is considered a single piece following the initial assembly operation. The entire lower filler assembly is secured to the core support barrel flange and the upper vessel filler assembly, after installation of the latter assembly, by a set of tie bolts which extend through both the upper filler and the core barrel flange. The studs are pretensioned to carry the entire filler and to prevent separation of the assembly from the flange during all operating and test conditions.

The underside of the filler locating plate (bottom piece) has a set of four radial slots which engage matching lugs that project upward from the lower reactor vessel head. These closely fitted lugs and slots serve as a radial key arrangement capable of resisting lateral loads between filler and vessel, yet permitting differential expansions between them. The filler is thereby positively centered in the bottom of the vessel, regardless of thermal and pressure effects on the filler and vessel. Only lateral loads due to blowdown pressure differentials, seismic, or other horizontal accelerations are transferred by the radial key system. End clearance on the key-keyway engagement prevents vertical (axial) loadings at this interface.

All vertical loads between filler and reactor vessel are transmitted through the filler mounting on the core support barrel flange.

A provision for backup, lateral-load-carrying capability is included on the bottom and third-from–bottom filler pieces by the addition of sets of travel-limiting bearing pads of their outside diameter. These pads are fitted to matching pads on the inside of the reactor vessel in such a manner that a small clearance normally exists. Contact between these filler and vessel bearing pads can occur only by a lateral shift of the filler assembly with respect to the filler locating plate (which is engaged with the reactor vessel lower head lugs). The connection between locating plate and filler is designed to transfer lateral loads approaching the design capacity of the vessel lugs. At loads exceeding this design limit, the design allows relative movement of the lower vessel filler with respect to the filler locating plate. When this motion occurs, contact between filler and vessel pads transfers the load directly to the vessel without overloading the vessel lugs.

#### 4.2.4.2 Fuel Modules (Core I)

##### 4.2.4.2.1 General Description[16]

The reactor core consists of nine fuel modules (see Figure 4-11) which are supported from below by the core mounting plate and held down from above by module holddown springs. Horizontal alignment is maintained by core mounting plate pins which fit into the lower end of the fuel module and by upper core support plate pins which fit into the upper end of the fuel module.

The fuel module consists of two basic parts, viz, (a) the fuel assembly and (b) the upper support structure. Attached to each of the instrumented fuel module support structures is an instrument lead penetration assembly which provides for passage of the instrument leads through reactor vessel head nozzles.

The basic functional requirements for the reactor core are as follows:

(1) Provide a nuclear heat source which is, within given constraints, typical of that of an LPWR. Rated power is 55 MW(t) and lifetime is 2000 EFPH. Peak linear heat generation rate is 19 kW/ft with radial power gradients similar to maximum radial power gradients in an LPWR.

(2) Provide a core nuclear, thermal-hydraulic, and mechanical response during planned LOCEs which is similar to the anticipated core response during an LPWR LOCA.

(3) Contain sufficient instrumentation within the core boundaries to characterize various core and coolant conditions before and during LOCEs.

(4) Maintain the fuel assembly and test instrumentation integrity during repeated LOCEs. Design features introduced to meet this requirement must also be consistent with requirements (1) and (2) above.

The fuel module design and fabrication reflect the general requirement that the reactor system possess all generic features of current LPWRs. Further, the design and fabrication meet AEC rules and regulations for licensing of a utilization facility, AEC standards for

radiation protection, and RDT standards for equipment design and manufacturing. The AEC documents applied in the design and fabrication are listed below.

STANDARDS

UNITED STATES ATOMIC ENERGY COMMISSION, DIVISION OF REACTOR DEVELOPMENT AND TECHNOLOGY

| | |
|---|---|
| E 13-15T | Fuel Assemblies for Pressurized Water Reactors |
| F 2-2T | Quality Assurance Program Requirements |
| F 3-2T | Calibration System Requirements |
| F 7-2T | Preparation for Sealing, Packaging, Packing, and Marking of Components for Shipment and Storage |
| F 7-3T | Requirements for Identification Marking of Reactor Plant Components and Piping |
| F 8-1T | Preloading Threaded Fasteners and Closures |
| M 6-2T | Mechanical Locking Devices |

CODES AND PUBLICATIONS

UNITED STATES ATOMIC ENERGY COMMISSION

Rules and Regulations - Title 10

| | |
|---|---|
| Part 50 | Licensing of Production and Utilization Facilities (February 1971) |

AEC Manual

| | |
|---|---|
| Chapter 0524 | Standards for Radiation Protection |

These design and fabrication standards satisfy Criterion 1 in Appendix 1-A.

Additional details of the design of the fuel modules follow.

A. Center Fuel Module

The design concept for the center module is shown in Figures 4-12 and 4-13. The center module contains the highest-performance section of the core where LOCE damage potential is the greatest. Because of this:

(1) The center module is the most heavily instrumented.

(2) The fuel module holddown assembly and the instrument lead penetration assembly are integral parts of the fuel module to allow replacement without disturbing the other fuel modules.

B. Control Fuel Module

The design concept for the fuel modules with control rods is shown in Figures 4-14 and 4-15. These fuel modules contain the control rods, and three of these modules contain test instrumentation. Because of this:

(1) The upper support structure must provide guides and protection for the CRAs when they are withdrawn from the fuel assemblies.

(2) The instrumented modules require an instrument lead penetration assembly that is offset from the fuel module vertical centerline, since the control rod drives are located directly above the fuel module.

C. Corner (Triangular) Fuel Module

The design concept for the corner (triangular) fuel modules is shown in Figures 4-16 and 4-17. Two of these fuel modules also contain some instrumentation, and one of the instrumented modules contains the startup source.

The construction of the triangular fuel assemblies is similar to the center assembly except that:

(1) The lower core section is triangular
(2) The instrumented fuel modules require an instrument lead penetration assembly that is offset from the fuel module vertical centerline.

The basic fuel assemblies are provided in six arrangements as follows:

(1) Center (Type A) fuel assembly instrumented (15 x 15 array)
(2) Instrumented control (Type B) fuel assembly (15 x 15 array with control rods)
(3) Instrumented corner (Type C) fuel assembly (triangular array)
(4) Noninstrumented control (Type D) fuel assembly (15 x 15 array with control rods)
(5) Noninstrumented corner (Type E) fuel assembly (triangular array)
(6) Type F fuel assembly, which is the same as Type A except for zircaloy-4 guide tubes and prepressurized fuel rods.

4.2.4.2.2 Detailed Description

A. Fuel Assemblies

The fuel assembly consists of fuel rods

and a support skeleton, which consists of spacer grids attached to guide tubes that are in turn attached to end boxes. The CRA is also considered to be part of the fuel assembly.

The core includes three types of fuel assemblies as follows:

(1) Square center fuel assembly with 15 x 15 array of fuel rods and without control rods

(2) Square control fuel assembly with 15 x 15 array of fuel rods and control rod cluster

(3) Triangular corner fuel assembly with 12 x 12 triangular array of fuel rods and without control rods.

The fuel assemblies are designed to be capable, except for fuel enrichment, of obtaining without mechanical damage an average burnup of 30,000 MWD/MTU under power operating conditions normally assumed in the design of LPWR fuel assemblies. Enrichment is 4.00 wt% U-235, which is based on a design lifetime of 2000 EFPH. Specific design features follow.

1. Fuel Rods

The design of the fuel rod is shown in Figure 4-18.

The fuel material is $UO_2$ (enriched in U-235 to 4%) in the form of cold-pressed, sintered, and ground pellets at 93% of theoretical density. The pellets are

dished on the end face to minimize the axial thermal expansion of the pellet stack relative to the cladding and reduce radial swelling caused by long-term irradiation of the pellet.

The cladding for the fuel consists of zircaloy-4 tubing welded to the end caps (plugs) at each end. The tubing is 60 to 75% cold-worked and stress-relieved to provide the desired tensile properties.

Internal fuel pin components include (a) an Inconel helical spring to maintain the fuel pellet stack position during handling and (b) alumina $Al_2O_3$ insulating washers at the pellet stack ends to reduce heat transfer to the fuel pin end regions.

The void space inside the fuel rod (Types A through E) will be filled with helium at atmospheric pressure. During LOCEs the fuel rod internal pressure will be lower than the corresponding pressure in a prepressurized rod. This will lower the probability of bursting a fuel rod and will permit use of the same core for repeated LOCEs.

The void space inside the Type F fuel module fuel rods will be filled with helium at significant pressure (200 to 800 psig) to simulate contemporary LPWR fuel rod conditions and responses during a LOCE.

Analyses indicate that cladding could collapse in as little as 1050 hr, which

is less than the 2000-EFPH design objective. This is based on the combination of extreme limits in cladding tolerances, cladding temperature, and linear heat generation rate. Collapse before the 2000-EFPH design life is considered unlikely because (a) the probability of the combination of all the extreme conditions at one spot is low and (b) the analytical technique used is believed to be conservative[17]. The fuel supplier's evaluations indicate that an initial internal pressure of 500 psia is required to maintain the cladding free-standing for a design lifetime of 30,000 MWD/MTU.

2. Support Skeleton

The fuel assembly skeleton provides the support and positioning for the fuel rods, control rods, and some instrumentation. For descriptive purposes, the skeleton consists of three basic parts as follows:

(1) Five Inconel spacer grids, which maintain the fuel pin and control rod guide tube spacing
(2) 21 (in the square 15 x 15 fuel assemblies) stainless steel control rod guide tubes, which provide the structural support for the spacer grids and bottom and top end boxes
(3) Austenitic stainless steel bottom and top end boxes, which provide upper and lower supports for the fuel assembly.

3. Control Rod Assembly

Each CRA is made up of 20 (refer to Figure 4-1) control rods coupled to a

single spider. Each poison control rod (Figure 4-2) consists of an absorber section of Ag-In-Cd clad with cold-worked, Type 304 stainless steel tubing and Type 304 stainless steel upper and lower end pieces. The end pieces are welded to the clad to form a water- and pressuretight container for the absorber. The control rods are rigidly coupled to the spider by a threaded connection between the upper end fitting and the spider. Maximum conformity with the (guide tube) channels is provided by reducing the diameter of the upper end fitting to allow limited control rod flexibility (see Figure 4-2). The CRA is inserted through the upper end box of the fuel assembly with each control rod being guided by an in-core guide tube. Guide tubes are also provided in the upper support structure above the core so that full-length guidance of the control rods is provided throughout the stroke. With the module assembled, the CRA cannot be withdrawn far enough to cause disengagement of the control rods from the in-core guide tubes.

B. Upper Support Structures

An upper support structure is rigidly attached to each fuel assembly to form a fuel module. Support structure material is Type 304 stainless steel, and basic configurations are (a) square tube for square fuel assembly and (b) round tube for corner fuel assembly.

The functions of the support structures are as follows:

(1) Provide horizontal alignment for the top end of the fuel assembly

(2) Provide vertical holddown load for the fuel assembly

(3) Provide support and protection for instrumentation leads and tubing in the region between the top of the instrumented fuel assembly and the instrument penetration at the reactor vessel head nozzle

(4) Provide for convenient fuel replacement of fuel module removal for criterion inspection

(5) Provide for protection of the CRA from coolant flow in the rodded fuel modules.

As a result of the required functions (3) and (4) above, the method of holding down the fuel assemblies from above the reactor vessel nozzles by means of upper support structures was selected over the usual LPWR method of holding down the fuel assemblies with an upper core support plate near the top of the fuel assembly boundary.

### 4.2.4.3 Control Rod Drive Assembly[18]

#### 4.2.4.3.1 General Description

Each CRA is made up of 20 control rods, each containing absorber material, which are coupled to a single Type 304 stainless steel spider. Each control rod consists of the poison material in rod shape clad with cold-worked Type 304 stainless steel tubing and Type 304 stainless

steel upper and lower end pieces. The end pieces are welded to the clad to form a water- and pressuretight container for the absorber. The control rods are loosely coupled to the spider to permit maximum conformity with the channels provided by the guide tubes. The CRA is inserted through the upper end fitting of the fuel assembly, each control rod being guided by an in-core guide tube. Guide tubes are also provided in the upper plenum assembly above the core so that full-length guidance of the control rods is provided throughout the stroke. With the reactor assembled, the CRA cannot be withdrawn far enough to cause disengagement of the control rods from the in-core guide tubes. Pertinent design data are shown in Table 4-IX. CRA prototypes similar

TABLE 4-IX

CONTROL ROD ASSEMBLY DESIGN DATA

| Item | Data |
|---|---|
| 1. Number of CRAs | 4 |
| 2. Total number of rods per assembly | 20 |
| 3. Outside diameter of control rod, in. | 0.440 |
| 4. Cladding thickness, in. | 0.018 - 0.020 |
| 5. Cladding material | Type 304 stainless steel, cold-worked |
| 6. Absorber material | 80% Ag, 15% In, 5% Cd |
| 7. Length of absorber section, in. | 66 |
| 8. Stroke of control rod, in. | 65 |

to this design have been extensively tested at reactor temperature, pressure, and flow conditions under existing PWR programs.

The 80% Ag-15% In-5% Cd absorber material is enclosed in stainless steel tubes to provide structural strength of the CRAs. These rods are designed to withstand all operating loads including those resulting from hydraulic forces, thermal gradients, and reactor scram deceleration. The cladding of the absorber section also prevents corrosion and eliminates possible contamination of the reactor coolant.

The ability of the absorber clad to resist collapse due to the system pressure has been demonstrated by PWR test programs on cold-worked stainless steel rods. The actual collapse margins are higher than the requirements. Internal pressure and absorber swelling are not expected to cause stressing or stretching of the clad.

It is not anticipated that the CRAs will encounter significant frictional resistance to their motion in the guide tubes. Because of their length and unavoidable lack of straightness, some slight mechanical interference between control rods and guide tubes may be expected. The parts involved, especially the control rods, are so flexible, however, that only very small frictional drag will result. Similarly, thermal distortions of the control rods are expected to be small because of the low heat generation and adequate cooling.

The Ag-In-Cd poison material melts in the 1425 to 1515°F range. The analytical predictions

of the poison material temperatures during LOCE indicate that the fuel rods will be approximately 2000°F surface temperature when the poison reaches 1425°F. A testing program is underway to determine (a) high-temperature properties of the Ag-In-Cd and (b) compatibility of molten Ag-In-Cd with stainless steel. The testing program results will be used to confirm analytical predictions of control rod response to high temperatures that may be encountered in severe LOCEs or a LOCA.

Lifetime tests have been performed by manufacturers of commercial PWR CRAs to prove the mechanical adequacy of the type of control rod structure described.

4.2.4.4 Evaluation

The basis for the design of the fuel modules is described in 4.2.4.2.1. The fuel rods, control rods, and skeleton components within the core boundaries are being designed and fabricated in accordance with RDT Standard E 13-15T, which requires the use of commercial practices in developing the fuel assembly design to be typical of current LPWR designs. Because of this, the design development effort associated with the LOFT fuel modules has been directed toward providing a fuel assembly design that maintains the fuel pin integrity, test instrumentation reliability, and typical LOCE response for multiple tests.

4.2.4.4.1 Fuel Rod

The LOFT core is intended for use for multiple LOCEs where damage potential is initially quite low but is increased in each succeeding experiment. Premature fuel rod failures (swelling and cladding breaches) must be

avoided to permit completion of a test series, thus minimizing the program cost. Damage to fuel modules is to be avoided except for the concluding and most severe test of some of the later series. The fuel pins of the initial core will be unpressurized; however, pins in later replacement center elements may be pressurized as required.

The LOFT fuel rod cladding is zircaloy-4. Failure of this material is related to its annealing characteristics. Experimental studies have been performed to determine the annealing characteristics of zircaloy-4. These studies indicate that no appreciable annealing occurred below 1100°F. Above this temperature increasingly rapid annealing begins to occur. Instantaneous annealing (<1 sec) occurred at about 1500°F. Thus, swelling and cladding breaches are not expected to occur during the initial LOCEs.

4.2.4.4.2 Skeleton and Control Rods

Fuel assembly skeleton and control rod structural failures must also be avoided during LOCEs to permit the cost-effective acquisition of LOCE data to complete the experiment series. Although the design is fixed (based on LPWR fuel bundle characteristics), design studies have been made, and are continuing, to define (a) the fuel assembly structural loading during blowdown and (b) the strength margins for the skeleton and control rod structural components during LOCEs, in order to determine fuel assembly structural adequacy for permitting multiple tests with one core. The fuel assembly

LOCE structural response prediction analysis includes the complete fuel modules.

4.2.4.4.3 Test Instrumentation

The test instrumentation must retain its calibration and structural soundness to provide the maximum in test information from all test series -- especially the last test which, because of its severity, will test the ECCS in a degraded condition relative to its design capacity. The design development of the test instrumentation installation features required to provide the level of reliability desired is described in 4.2.4.2.1 (also see Section 1.6.9).

The reactor vessel instrumentation penetration is another critical component. The fuel assembly instrumentation is placed in strategic but separated locations, and the assembly of the components features bundling of cables for routing purposes. Once assembled, the instrumented fuel assembly is not easily disassembled. However, the seal between the instrument lead sheath and the reactor vessel penetration must still be made up using brazing or welding techniques. A seal that can be made up with a high degree of reliability and minimum damage to instrument leads has been developed.

4.2.4.5 Control Rod Drive System[18]

4.2.4.5.1 General Description

The control rod drive system includes drive mechanisms (which actuate CRAs), drive controls, power supplies, position indicators, operating panels and indicators, safety devices, enclosures, housings, and mountings. Criteria applicable to drive mechanisms for CRAs are given

below. The instrumentation and control portion of the control rod drives is described in detail in Section 9.1.8.

4.2.4.5.2 General Design Criteria

A. Single Failure

No single failure will inhibit the protective action of the control rod drive system. The effect of a single failure will be limited to one control rod drive.

B. Uncontrolled Withdrawal

No single failure will cause uncontrolled withdrawal of any CRA.

C. Equipment Removal

The disconnection of plug-in connectors, modules, and subassemblies from the protective circuits will be annunciated or will cause a reactor scram.

D. Position Indication

Two independent methods of position indication are provided for each control rod drive. The accuracy of the position indicators is consistent with the tolerance set by reactor safety analysis.

E. System Monitoring

The control rod drive control system includes provisions for monitoring conditions that are important to safety and reliability. These include rod position deviation and power supply voltage.

F. Drive Speed

The control rod drive control system provides a constant speed for the mechanism.

The drive controls, or mechanism and motor combination, have a speed-limiting feature. The speed of the mechanism has been established to be 2.0 in./min for both insertion and withdrawal. The withdrawal speed is limited so as not to exceed 25% overspeed in the event of speed control fault.

G. Mechanical Stops

Each control rod drive has positive mechanical stops at both ends of the stroke or travel. The stops are capable of receiving the full operating force of the mechanisms without failure.

H. CRA Positioning

The control rod drives provide for controlled withdrawal or insertion of the CRA out of, or into, the reactor core to establish and maintain the power level required. The drives are also capable of releasing the CRAs for emergency reactor conditions.

I. CRA Scram

The scram command has priority over all other commands. Scram action is positive and nonreversible. Scram circuitry provides the final protective action and is direct-acting, incurs minimum delay, and requires no external power. Circuit-interrupting devices do not prevent reactor scram. Circuit breaker position information is indicated.

#### 4.2.4.5.3 Description of CRDMs

The control rod drives provide for controlled withdrawal or insertion of the CRAs out of, or into, the core and are capable of trip. The drives are sealed, synchropulse, motor-driven roller nut units. The control rod drive data are listed in Table 4-X.

The drive mechanism consists of a motor tube which houses a leadscrew and its rotor assembly and a buffer. The end of the motor tube is closed by a cap and vent assembly. A motor stator is placed down over the motor tube pressure vessel, and position indication switches are arranged outside the motor tube extension.

TABLE 4-X

CONTROL ROD DRIVE DESIGN DATA

| Item | Description | Data |
|---|---|---|
| 1. | Number of drives | 4 |
| 2. | Type | Roller nut drive |
| 3. | Location | Top-mounted |
| 4. | Direction of trip | Down |
| 5. | Velocity of normal withdrawal and insertion, in./min | 2.0 |
| 6. | Maximum travel time for 90% trip insertion, sec | 2.0 |
| 7. | Length of stroke, in. | 65 max |
| 8. | Design pressure, psig | 2500 |
| 9. | Design temperature, $^{o}F$ | 650 |

The control rod drive output element is a translating screw shaft which is coupled to the control rod. The screw is driven by an antifriction nut element, which is rotated magnetically by a motor stator located outside the pressure boundary. Current impressed on the stator causes the separable nut halves to engage; a mechanical spring causes them to disengage the screw in the absence of a current. For rapid insertion the nut separates to release the screw shaft, which then falls into the core by gravity. A hydraulic buffer within the upper housing decelerates the falling assembly to a low speed a short distance above its fully in position. The final deceleration is accommodated by the down-stop buffer spring.

This mechanism incorporates proven principles and material combinations; it is based on extensive analytical, developmental, design, test, and manufacturing experience obtained for the Naval Nuclear Program and commercial PWRs.

A special structure, external to the CRDM, is provided to eliminate the potential of missiles resulting from a 100% circumferential rupture of the motor tube. A rupture of this type would project the motor tube vertically as a missile. The structure limits the vertical motion of the motor tube during such a rupture. Thus, the control rod design satisfies Criterion 28 in Appendix 1-A.

The motor tube houses a latch mechanism which prevents upward motion of the lead-screw after a trip; therefore, restraining the

motor tube also reduces the potential for control rod ejection.

The control rod drive is shown in Figures 4-19 and 4-20.

A. Materials Selection

The materials described herein pertain to materials used within and including the pressure boundary of the mechanism which are in contact with the primary coolant water. The materials are as follows:

(1) Type 304 stainless steel (components not requiring special wear, strength, or magnetic properties)
(2) Type 17-4 PH stainless steel (lead-screws, spline shaft, rotor tube)
(3) Inconel-X (springs)
(4) Carpenter No. 10 stainless steel (lock-pins, rivets)
(5) Type 308 stainless steel (consumable insert and weld rod)
(6) Type 403 stainless steel (motor tube forging, segment arms)
(7) Type 410 stainless steel (lockwashers)
(8) Stellite:
    (a) Haynes alloy No. 3 (bearing balls, leadscrew check valve ball)
    (b) Haynes alloy No. 6 (pawls, lead-screw connector)
    (c) Haynes alloy No. 19 (bearing races, bushings, pivot pins)
    (d) Haynes alloy No. 25 (bearing races, synchronizing pins).

The design lifetime of parts used in the mechanism is 10 years.

4.2.4.5.4 Control Rod Drive Control System (Control Package)

The control system for the control rod drive is designed to energize and position the control rod drive, provide a reactor scram, indicate the CRA position in the core, and indicate malfunctions in the system. The control system consists of the following:

(1) System control
   (a) Individual and group CRA control (operator's panel)
   (b) Position indication
(2) Power supply (motor controller)
   (a) Silicon controlled rectifier (SCR) programmer (CRA speed standard)
   (b) SCR banks
   (c) Holding bus
   (d) CRA grouping panel
   (e) Transfer control.
(3) Trip

   The rod drive control system provides motor power, position indication, trip circuitry, and control logic. (Figures 4-21a, 4-21b, and 4-21c are block diagrams of the control system.)

4.2.4.5.5 Control Rod Drive System Evaluation

A. Design Criteria

The system is designed, tested, and analyzed for compliance with the design criteria.

B. Materials Selection

Materials are selected to be compatible with, and operate in, the reactor coolant.

Certified mill test reports containing chemical analysis and test data of all materials exposed to the reactor system fluid are provided and maintained for the control rod drives. Certificates of compliance for other materials and components are also provided.

C. Relation to Design Temperature

All parts of the control rod drive exposed to reactor coolant are designed to operate at 650°F, although it is expected that all parts will operate considerably cooler.

D. Design Life

The design life of the control rod drive control system is as follows:

(1) Structural portions, such as flanges and pressure housings -- 10 years

(2) Moving parts, such as leadscrew and roller nuts -- full-stroke cycles, 4000; trips from various receipts, 500

(3) Electronic control circuitry -- 10 years.

#### 4.2.5 Fuel Densification Effects

An evaluation will be performed to assess the effects of fuel densification on LOFT reactor operation as required by Regulatory Staff Report, "Densification of Light Water Reactor Fuels", dated November 14, 1972. The results of the evaluation will be used to determine the need for periodic flux scanning and possibly special reactor operating limits.

## 4.3 Tests and Inspections

### 4.3.1 Nuclear Tests and Inspections

#### 4.3.1.1 Critical Tests and Low-Power Physics Tests

The initial testing and startup operation of the LOFT

reactor system prior to full-power operation is divided into three phases, viz, (a) Phase I - Precore Load Testing and Operation, (b) Phase II - Core Loading and Zero-Power Tests, and (c) Phase III - Power Testing.

The purpose of this program will be to test and operate the reactor and its various systems:

(1) To make certain that the equipment and systems (less the core) have been installed correctly and provide preliminary verification that they will operate in accordance with the design requirements (Phase I)

(2) To provide safe prerequisite procedures and system qualification prior to initial fuel loading and determine zero-power values of core parameters significant to the design and operation (Phase II)

(3) To bring the LOFT reactor system to its rated power in a safe, orderly fashion and demonstrate performance over a broad band of operating limits essential to its LOCE performance (Phase III).

Systems operations throughout all phases of the program will be conducted by operating personnel in verbatim accordance with specific and detailed written startup and test procedures. These procedures will include a delineation of administrative procedures, test responsibility, equipment clearance procedures, and an overall sequence of startup operations.

Procedures stating the test purpose, conditions, precautions, limitations, and criteria for acceptance will be prepared for each test in all phases of the program.

The test program described in the following sections is based upon the reference plant design.

4.3.1.1.1 Phase I - Precore Load Testing and Operation

As the first active step in this phase of the startup program, mechanical and electrical checks of specified equipment will be made to

ensure that installation and interconnections conform to design requirements and are in accordance with good safety practice. This program includes those tests, adjustments, calibrations, and system operations necessary to assure that initial fuel loading and subsequent full-power operation can be safely undertaken. Where feasible, plant mechanical systems will be ultimately operated at full-load conditions of pressure, temperature, and flow prior to core loading. Prior to any system test, all active components of a system undergo initial operation as part of as small a subsystem as feasible. A general description of tests to be performed prior to initial reactor fueling to indicate the nature and scope of the program is contained in Section 14.0.

4.3.1.1.2 Phase II - Initial Core Loading and Zero-Power Tests

A. Core Loading

After the Phase I tests have been satisfactorily completed, plant conditions will be established under which the initial nuclear fuel loading can be accomplished. Water in the reactor vessel will be borated to maintain the effective multiplication constant of the core at or below 0.90 at all stages of the core loading. The primary coolant system will be isolated, and applicable tagging and administrative procedures will be used to prevent unauthorized changes in the boron concentration. The boric acid tank will be filled with concentrated boric acid solution, and the purification system will be in service for use as a residual heat removal system and will also be available to provide

moderator mixing and temperature control if required. A detailed preloading checkoff list will be followed to ensure the availability of all systems and equipment required for loading operations. Periodically, prior to actual use, the checkoff list will be reviewed to ensure that systems and equipment continue to meet the requirements of the core loading operation. The core loading sequence will follow a step-by-step procedure to ensure at each loading step that:

(1) Neutron sources and neutron detectors are properly located in the core before fueling is completed. Radiation monitoring will be provided at the core loading stations during fuel handling and core loading operations.

(2) Fuel assemblies are installed in their proper order and proper locations.

(3) CRAs are inserted into the proper fuel assemblies prior to loading the assemblies into the core.

B. Precritical Measurements

After the complete core has been loaded according to the prescribed procedure and the reactor vessel head assembled on the vessel, considerable testing of the control rod drives and PPS will take place. These tests will be performed just prior to initial criticality to verify safety for critical operation. In addition, adjustment of source range detectors will be performed, and full-scale testing of in-core process instrumentation will take place.

C. Initial Criticality

The precriticality checkoff list will be completed and the core brought from 10% shutdown to criticality by first withdrawing all control rods a predetermined distance and then subsequently reducing the boron concentration in the coolant by dilution until a high subcritical multiplication rate is observed. Source range counts will be monitored and recorded, and the inverse multiplication ratio will be computed and plotted as criticality is approached. At this point, the rods may be withdrawn a short distance, the count rate observed, and the rods returned to their original position. When desired, the reactor will be made critical by using the rods. Measurements will be performed at the exact initial condition of all reactor variables that affect criticality, viz, control rod bank position, boron concentration, fuel temperature, and primary coolant temperature and pressure. The axial flux distribution will also be measured at this time.

D. Zero-Power Reactivity Coefficient Evaluation

A sequence of zero-power physics measurements will then be undertaken. The sequence of tests will consist of measurements of temperature coefficient, integral and differential control rod worths, and dynamic boron worths. Specifically, the following measurements will be made:

(1) Isothermal temperature coefficient. Differential temperature coefficient

measurements will be made by increasing the moderator temperature a certain increment and observing the resultant change in core reactivity.

(2) Control rod shutdown measurements. The combined integral worth of specified control rods from a given critical position to the fully in position will be measured by tripping these rods. The resulting change in core reactivity will be determined from the observed transient in flux level response. This measurement will be repeated for various control rod configurations.

(3) Differential control rod worth. Control rod differential worth measurements will be performed by (a) shimming selected control rods while maintaining boron, temperature, and pressure constant and (b) measuring the resulting change in core reactivity.

(4) Dynamic boron worth. Differential boron worth measurements will be made by (a) changing primary coolant boron concentration while maintaining temperature, pressure, and control rod position constant and (b) measuring the resulting change in core reactivity.

(5) Axial flux scan. At selected control rod configurations, an axial flux scan will be performed using the self-powered flux detector equipment.

The above measurements will be repeated at specified intervals of reactor temperature ranging from approximately 68°F to the maximum expected during full-power operations.

Also, reactor power will be increased for measurement of the source range-intermediate range nuclear instrumentation overlap, but will be maintained well below the heating range.

4.3.1.1.3 Phase III - Power Testing

A. General

To ensure that the core operates as expected in all respects and that rated power is achieved under carefully controlled conditions, a Power Escalation Test Program will be established to carry the plant from completion of zero-power physics testing through full-power operation. The Power Escalation Test Program provides for achievement of full power in steps, with careful review of significant core parameters at each step, to ensure that fuel and control rod mechanical performance, flux distribution, temperature distribution, reactivity control worths, and response to transients are acceptable before additional escalation is undertaken.

The Power Escalation Test Program provides for measurements to be made at convenient power levels starting in the vicinity of minimum self-sustaining power and increasing by a number of discrete levels until the power reaches 100%. In each case, progress to a higher level is contingent upon acceptable core and equipment performance.

B. Preparation for Power Escalation

To monitor performance, the following analytical results must be available before

power escalation is undertaken:

(1) Expected values for local peak-to-average-power ratios in each of the in-core flux measurement locations

(2) Expected values for relative power in each fuel assembly and in individual fuel rods of interest

(3) Expected values of nuclear peaking factors

(4) Combined power and programmed temperature reactivity defect as a function of primary power level at expected boron concentrations and rod configurations

(5) Identification and integral reactivity worth of the most significant CRA(s).

Other conditions that shall be met before the Power Escalation Test Program can commence are listed below.

1. The following plant conditions are established:

   (1) The Zero-Power Reactor Physics Test Program has been successfully completed as prescribed. Experimental values of zero-power reactivity parameters have been reduced and are available for guidance in the Power Escalation Test Program.

   (2) Discrepancies between analytically predicted and experimentally measured values of reactivity parameters have been identified, and appropriate revisions have been made

in the values of expected primary coolant boron concentrations and CRA group banked positions listed in the Power Escalation Test sequence.

(3) The primary coolant system and all required components of the secondary coolant system are fully assembled, mechanically and electrically tested, and ready for service as required.

(4) All control, protection, and safety systems are fully installed; all required preoperational tests are satisfactorily completed; and all components are ready for service as required.

(5) The reactor coolant is at required temperature, pressure, and boron concentration.

(6) Demineralized water is available in adequate quantity for extensive boron dilution.

(7) Concentrated boric acid solution is available in sufficient quantity to permit increases in main coolant boron concentration as required.

(8) All special equipment and instrumentation required for the Power Escalation Test Program is installed and calibrated and is available for service as specified.

(9) Thermocouple correction constants derived from the hot, isothermal calibrations are available.

2. A pretest checkoff list indicating the

required and actual status of all systems and auxiliary equipment affecting the Power Test Program is complete. This list shall include provisions for verification and certification of all items specified in B.1.

3. Approved experimental test procedures suitable for executing the Power Escalation Test sequence have been distributed to all personnel concerned with the Power Escalation Test Program.

4. The procedure, schedule, and personnel assignments and responsibilites for both normal and emergency operations have been thoroughly discussed with, and are understood by, the operating and expermental personnel.

5. The emergency plan has been completed and personnel and organizations involved have been notified.

C. Testing To Be Accomplished

The tests listed below are presently planned for inclusion in the Power Escalation Test Program. A final test program will be delineated just prior to commencement of testing to ensure that the tests are based on the latest data.

1. Reactor Physics Testing

During initial operation at power and during the approach to full power, a sequence of reactor physics measurements will be carried out to experimentally determine reactivity effects of power, control rods, boron, and xenon. In

addition, measurements of power distribution and reactor plant transient response will be performed.

Descriptions of the measurement techniques follow.

a. Power Reactivity Measurement

The core reactivity associated with power operation, relative to zero power, will be measured at various power levels up to and including 100% power.

b. Control Rod and Boron Worth Measurements

Whereas thermal effects preclude direct measurements of control rod worth and boron worth during power-range operation, the equivalence of rod motion and boron change (in./ppm) will be measured at selected steady state power levels and over specified ranges of rod bank positions. This will be performed by slowly varying boron and measuring the change in rod position required to maintain constant other reactor variables, e.g., primary temperature and pressure. This measured equivalence, with experimental zero-power physics results and appropriate calculational models, will be used to extract the power-range quantities of interest.

c. Dynamic Xenon Transient Measurements

Integral xenon worth transient measurements are to be made at elevated power levels. This type of

measurement is made by changing to a new power level and adjusting control rod position to maintain average moderator temperature and pressure constant at the new power. A reactivity transient associated with the change in effective xenon concentration will occur. The observed accumulated change in core reactivity over a given time interval, corresponding to compensating rod motion, is a measure of xenon transient worth for that time interval.

d. Elevated Power Transient Response Evaluation

As the power level is increased during the initial power escalation, a series of transient response measurements will be made to determine reactor-plant response to load changes. The test technique in each case will consist of initiating the transient change in plant conditions and closely monitoring primary system response during the transient.

e. Elevated Power Determination of Power Distribution

At successive power levels and in prescribed control rod configurations, measurements of flux and power distributions within the core will be made and nuclear hot channel factors will be evaluated. Use will be made of the miniature in-core

flux detector system and the in-core temperature sensors to determine the nuclear power and thermal and hydraulic conditions within the core.

f. Calibration of Peak-Power Instrument

The nuclear instrumentation peak-power instrument is described in Section 9.1.2.5. Initial calibration of the peak-power instrument will be based on calculated neutron flux distributions. The accuracy of these calculations and, therefore, the validity of the calibration will be checked under various conditions of power level, rod position, coolant flow rate, and poison distribution during the initial approach to full-power operation. Appropriate calibration adjustments will be made based on actual neutron flux distributions. Periodic calibration checks will also be performed at selected intervals throughout the core life.

g. Equilibrium Xenon Reactivity

This quantity will be measured at 100% power from the total boron dilution observed between the hot zero-power critical condition and the final condition following approximately 40 hr of steady state operation at full power. Control rod bank position will be the same at both points. Temperature, pressure, and power reactivity corrections will be applied as required.

## D. Power Escalation Test Sequences

During power escalation to the 100%-power rating, measurements will be made to verify that plant parameters are not more severe than those used in the various accident transient and steady state analyses. Examples of such measurements are rod drop times, measurement accuracy of instrumentation, in-core power distribution, and shutdown capability.

These measurements are made at various points in the Power Escalation Test Program. As power level is increased, extrapolations are made for these parameters before proceeding in the program, including both instrument inaccuracies and uncertainties. A continuing verification is then made that the reactor parameters are no more limiting than those assumed in the accident analyses, which are the most limiting values.

Each power step is relatively small so that a high degree of certainty is associated with the prediction of plant parameters. The accuracy of the prediction obtained for each power level is a major factor in determining further power escalation.

The reactor protection system guards the primary coolant system and the fuel and provides additional assurance that offsite personnel are protected against any potential deviations from the conservative start-up program discussed above.

### 4.3.2 Internals Tests and Inspection

#### 4.3.2.1 Component Tests

Because the reactor internals (core support structure and fillers) were designed for LOCE testing, much greater loads were used in their design than are normally used for similar commercial LPWR components. Testing of the reactor system is not planned to qualify it for use in LOFT. Flow testing will be conducted on the overall LOFT reactor system prior to nuclear operation as part of the cold core, hot operational tests and, as such, will qualify this system.

## 4.4 Special Features Having Safety Significance

The reactor system has included many features which contribute to a high level of confidence in the safety and reliability of the LOFT Integral Test System. Those features which provide safety through the design and protective system associated with the reactor system are described in 4.4.1 and 4.4.2.

### 4.4.1 Reactor System Design (First Level of Safety)

The systems -- as designed, fabricated, and tested, and as will be operated, requalified, and maintained -- provide a highly assured capability for reliable and predictable operations and an inherent capacity to prevent the occurrence of accidents by having the following features:

(1) The reactor system has been designed in accordance with approved design requirements contained in design documents (CDDs and SDDs). The requirements established in these design documents are reviewed and approved by ANC management and the AEC. Any changes to the SDD requirements are processed through an established review and approval chain before changes are incorporated into the system design. This assures that the components and systems are designed to satisfy the approved system design requirements. The SDD and CDDs for the reactor system are included in the reference section.

(2) A QA program was followed, as described in Section 16.0, which provides assurance that the reactor system was constructed, inspected, and tested in accordance with the applicable specifications, codes, and standards.

(3) The following components of the reactor system have been designed, fabricated, and analyzed to meet the requirements of the ASME Code as specified in the various system subsections:

(a) Reactor vessel fillers
(b) Core barrel
(c) Upper core support plate
(d) Core flow skirt - core fillers
(e) Fuel modules
(f) Fuel pins
(g) Instrumentation stalks
(h) Control rod drive assemblies.

(4) RDT standards, as shown in the referenced SDD and CDDs, have been incorporated into the design and fabrication of the reactor system components to assure higher quality than is required by conventional nuclear industry codes and standards.

(5) Criticality measurements will be made on the reactor core prior to operation to determine the criticality and reactivity response information required for safe operation. These measurements will also verify the predicted criticality measurement derived from analytical calculations.

(6) The boron control system has been designed to function as a slow-acting control system. As such it provides the safety margin for refueling and normal operation. This system, in conjunction with the control rods (poison), is capable of assuring a shutdown margin of at least 1% $\Delta\rho$ under all conditions.

4.4.2 Protective Systems (Second Level of Safety)

The reactor system is designed so that in the event of errors, malfunctions, or abnormal conditions, protective systems will arrest the event or limit the consequences to defined or acceptable levels.

The protective systems are as follows:

(1) The control rods have been designed to provide a rapid shutdown and control mechanism. The control rod system is capable of controlling all anticipated normal operating transients. The control rod insertion and withdrawal rate has been limited to 2 in./min, and analysis has shown this to be safe under all anticipated conditions. In addition, the natural reactivity feedback of the system is such as to produce a negative reactivity under all operating transients. These phenomena are: (a) Doppler coefficient, (b) moderator temperature coefficient, (c) uniform void coefficient, and (d) xenon and samarium buildup. Thus, a second level of safety is available in the LOFT system.

(2) In the event one of the rods fails to insert during a reactor scram, enough shutdown reactivity is available in the reactivity control systems to shut the reactor down and maintain it subcritical, i.e., $k_{eff} \leq 0.99$.

## 4.5 References[a]


1. Gulf United Nuclear Fuel Corporation Reports:

   a. SEEO 1111, "Reactor Vessel Filler" (December 15, 1971).
   b. SEEO 1566, "Core Barrel Flange Analysis" (November 9, 1971).
   c. SEEO 1605, "Lower Core Support Structure" (December 15, 1971).

2. R. C. Guenzler and V. W. Gorman, "LOFT Seismic Analysis Method and Design Basis Input", Aerojet Nuclear Company, LTR 10-7.

3. R. C. Guenzler et al, "Initial Stress Findings for the LOFT MTA Final Structural Design", Aerojet Nuclear Company, LTR 1110-19.

4. R. G. Rahl et al, "Final LOFT MTA Structural Analysis", Aerojet Nuclear Company, LTR 11-12 (to be published).

5. J. G. Arendts et al, "Preliminary LOFT MTA Dynamics Analysis", Aerojet Nuclear Company, LTR 11-4.

6. Aerojet Nuclear Company, LOFT Program Division, SDD 1.1.1, "Reactor System".

7. L. S. Tong, "Critical Heat Fluxes in Rod Bundles", Two-Phase Flow and Heat Transfer in Rod Bundles, The Winter Annual Meeting of the American Society of Mechanical Engineers, Los Angeles, California (November 18, 1969) p 31.

8. J. S. Gellerstedt et al, "Correlation of Critical Heat Flux in a Bundle by Pressurized Water", The Winter Annual Meeting of the American Society of Mechanical Engineers, Los Angeles, California (November 18, 1969) p 63.

9. D. S. Rowe, Crossflow Mixing Between Parallel Flow Channels During Boiling, Part 1; COBRA--Computer Program for Coolant Boiling in Rod Arrays, Pacific Northwest Laboratory, BNWL-371, Pt 1 (March 1967).

10. C. J. Hocevar and T. W. Wineinger, THETA1-B, A Computer Code for Nuclear Reactor Core Thermal Analysis, IN-1445 (February 1971).

11. J. A. McClure, TOODEE, A Two-Dimensional Time-Dependent Heat Conduction Program, IDO-17227 (April 1967).

12. Portland General Electric Company, Trojan Nuclear Plant, Preliminary Safety Analysis Report, Fig. 3.2.2.1.

13. Y. S. Touloukian (ed.), Thermophysical Properties of High Temperature Solid Materials, Vol. 2, Part II, New York: The MacMillan Company, 1967.

14. H. C. Brassfield et al, Recommended Property and Reaction Kinetics Data for Use in Evaluating a Light-Water-Cooled Reactor Loss-of-Coolant Incident Involving Zircaloy-4 or 304-SS-Clad $UO_2$, General Electric Company, GEMP-482 (April 1968).

15. Aerojet Nuclear Company, LOFT Program Division, CDD 1.1.1.5, "Core Support Structures".

16. Idem, CDD 1.1.1.1, "Fuel Modules (Core I)".

17. S. F. Gaines et al, "LOFT Fuel Densification Study", Exxon Nuclear Company, Inc., XN-73-28 (October 22, 1973).

18. Aerojet Nuclear Company, LOFT Program Division, CDD 1.1.1.8, "Control Rod Drives".

[a] Current issues unless otherwise indicated.

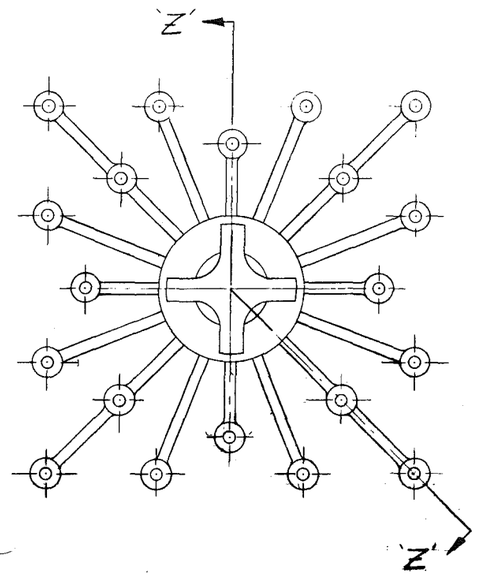


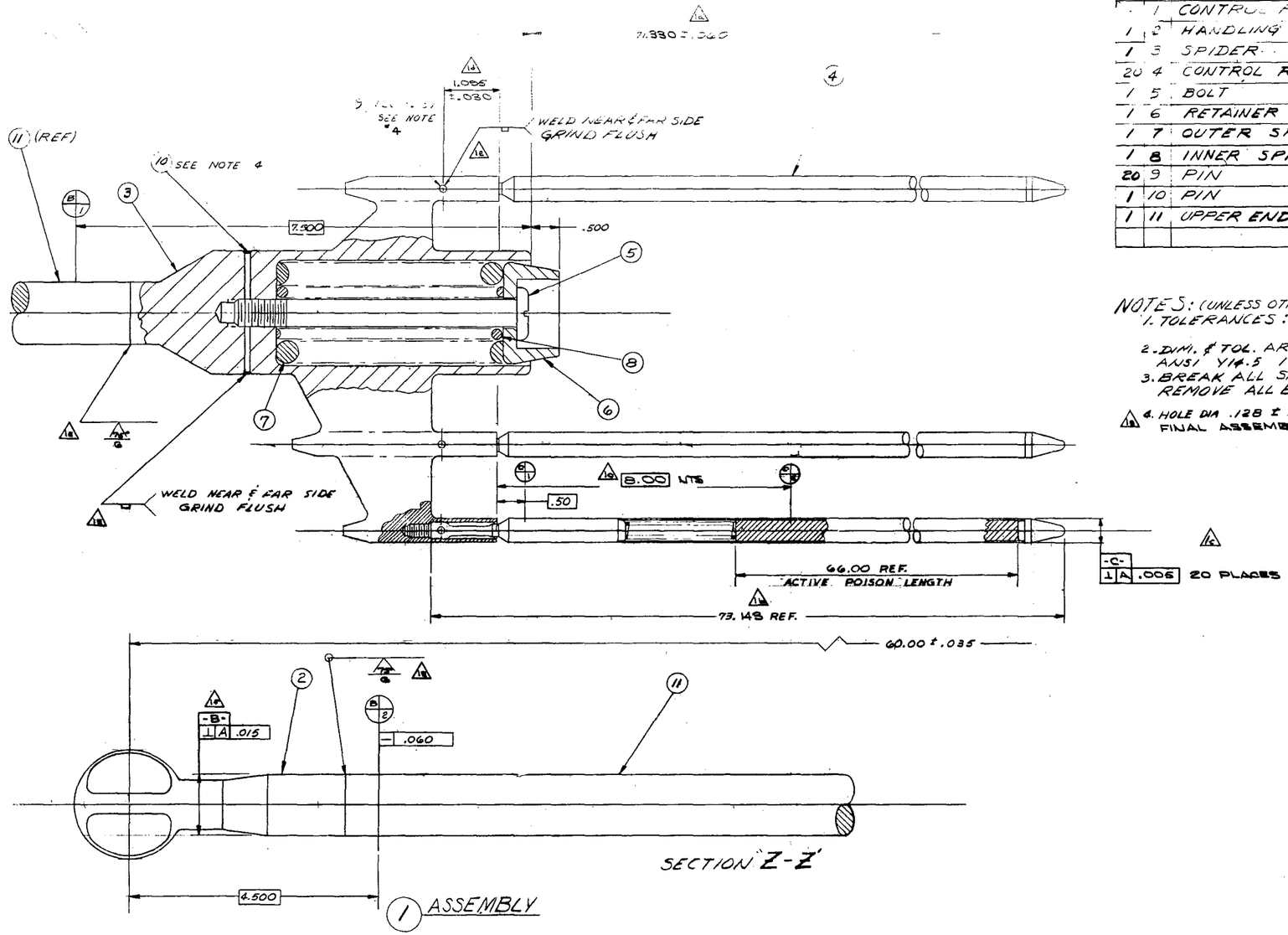


| QTY. | PT. NO. | DESCRIPTION |
|---|---|---|
| | 1 | CONTROL ROD ASSEMBLY |
| 1 | 2 | HANDLING KNOB |
| 1 | 3 | SPIDER |
| 20 | 4 | CONTROL ROD ASS'Y |
| 1 | 5 | BOLT |
| 1 | 6 | RETAINER |
| 1 | 7 | OUTER SPRING |
| 1 | 8 | INNER SPRING |
| 20 | 9 | PIN |
| 1 | 10 | PIN |
| 1 | 11 | UPPER END SHAFT |
| | | |

NOTES: (UNLESS OTHERWISE SPECIFIED)
1. TOLERANCES: .XX ± .015 .XXX ± .005 ANGULAR ± 2°
2. DIM. & TOL. ARE IN ACCORDANCE W/ ANSI Y14.5 1966
3. BREAK ALL SHARP EDGES AND REMOVE ALL BURRS.
4. HOLE DIA .128 ± .002 THROUGH AT FINAL ASSEMBLY

FIG. 4-1 CONTROL ROD ASSEMBLY.

(JN 300358, 1)

| QTY. | PT. NO. | DESCRIPTION |
|---|---|---|
| | 1 | ASSEMBLY |
| 1 | 2 | UPPER END FITTING |
| 1 | 3 | LOWER END FITTING |
| 1 | 4 | CLADDING |
| 1 | 5 | POISON ROD |
| 1 | 6 | PLENUM SPRING |

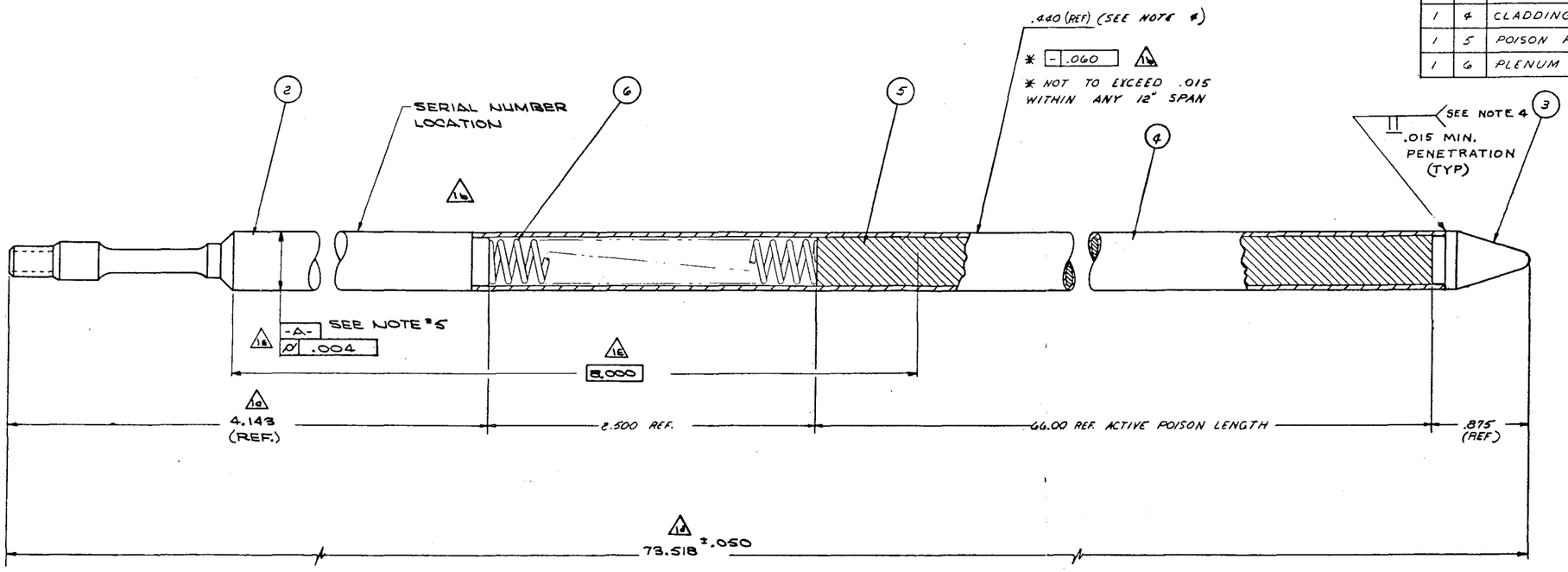


1 ASSEMBLY

## GENERAL NOTES

(UNLESS OTHERWISE SPECIFIED)

1. TOL. .XX ± .015 ; .XXX ± .005 ; ANG. ± 2°
2. BREAK ALL SHARP EDGES AND REMOVE ALL BURRS
3. DIM. & TOL. ARE IN ACCORDANCE WITH ANSI Y 14.5 1966.
4. THE ASSEMBLED ROD MUST BE NOT GREATER THAN .442 DIA (INCLUDING WELD OVERHANG.)
5. DATUM 'A' ESTABLISHED FOR INDICATED 8.000 LENGTH ONLY.
6. MINIMUM DIA. AT WELD AFTER DRESSING MUST BE GREATER THAN LOCAL ROD DIAMETER LESS .002 INCHES.

FIG. 4-2 CONTROL ROD.

(JN 300368, 1)

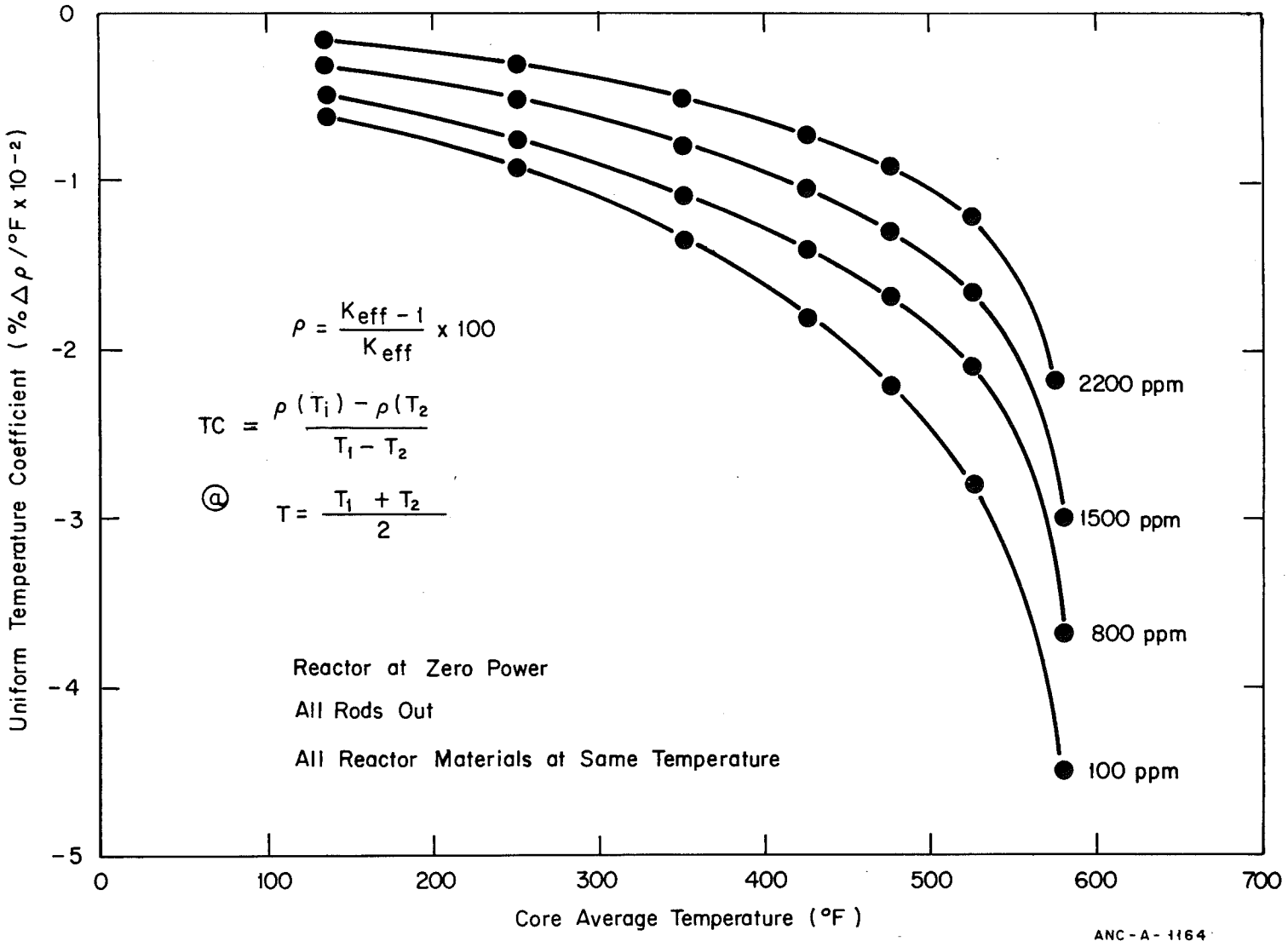


FIG. 4-3 MODERATOR TEMPERATURE COEFFICIENT.

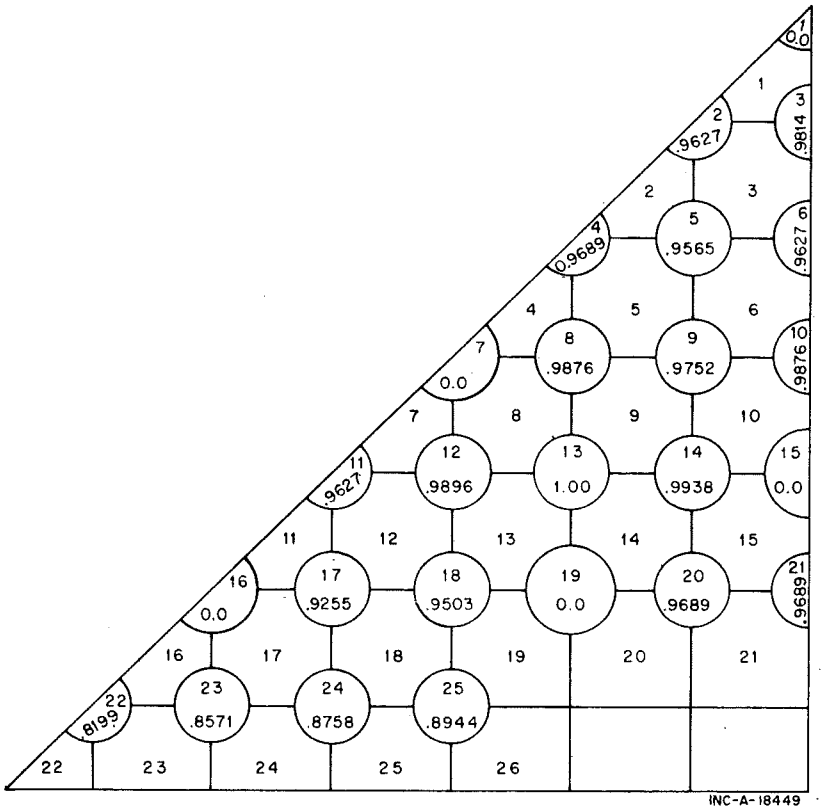


FIG. 4-4 COBRA MODEL OF LOFT CENTRAL FUEL ASSEMBLY.

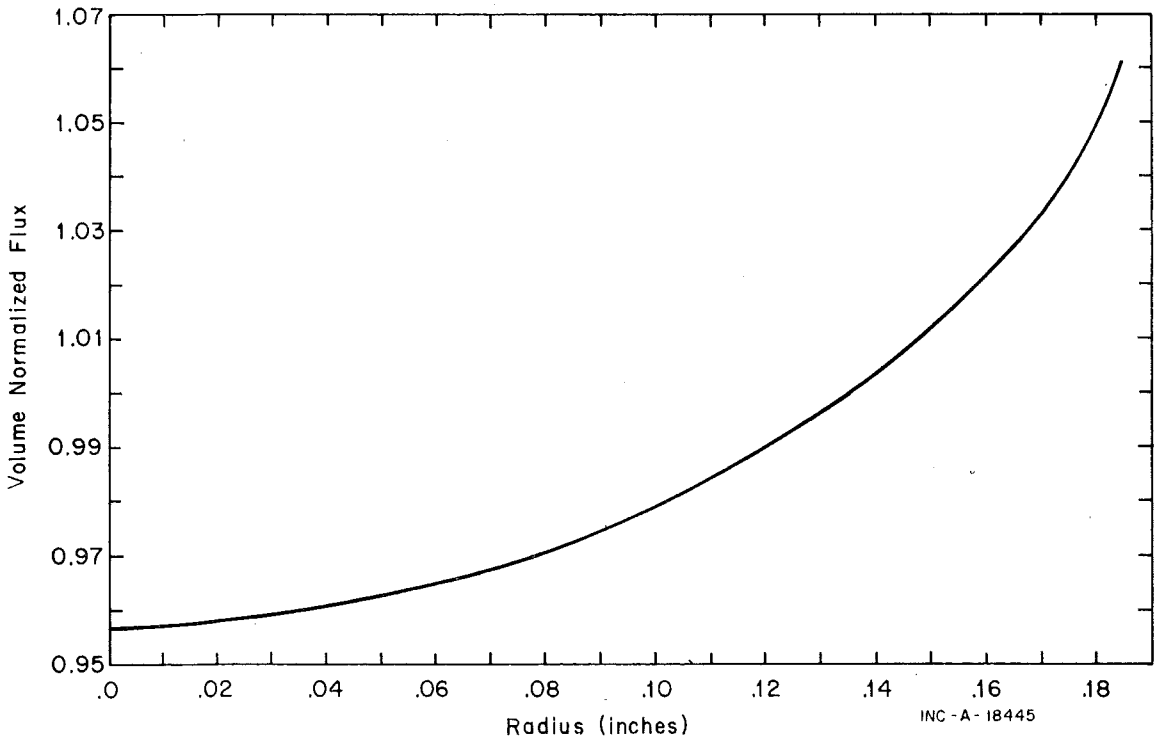


FIG. 4-5 VOLUMETRIC HEAT GENERATION.

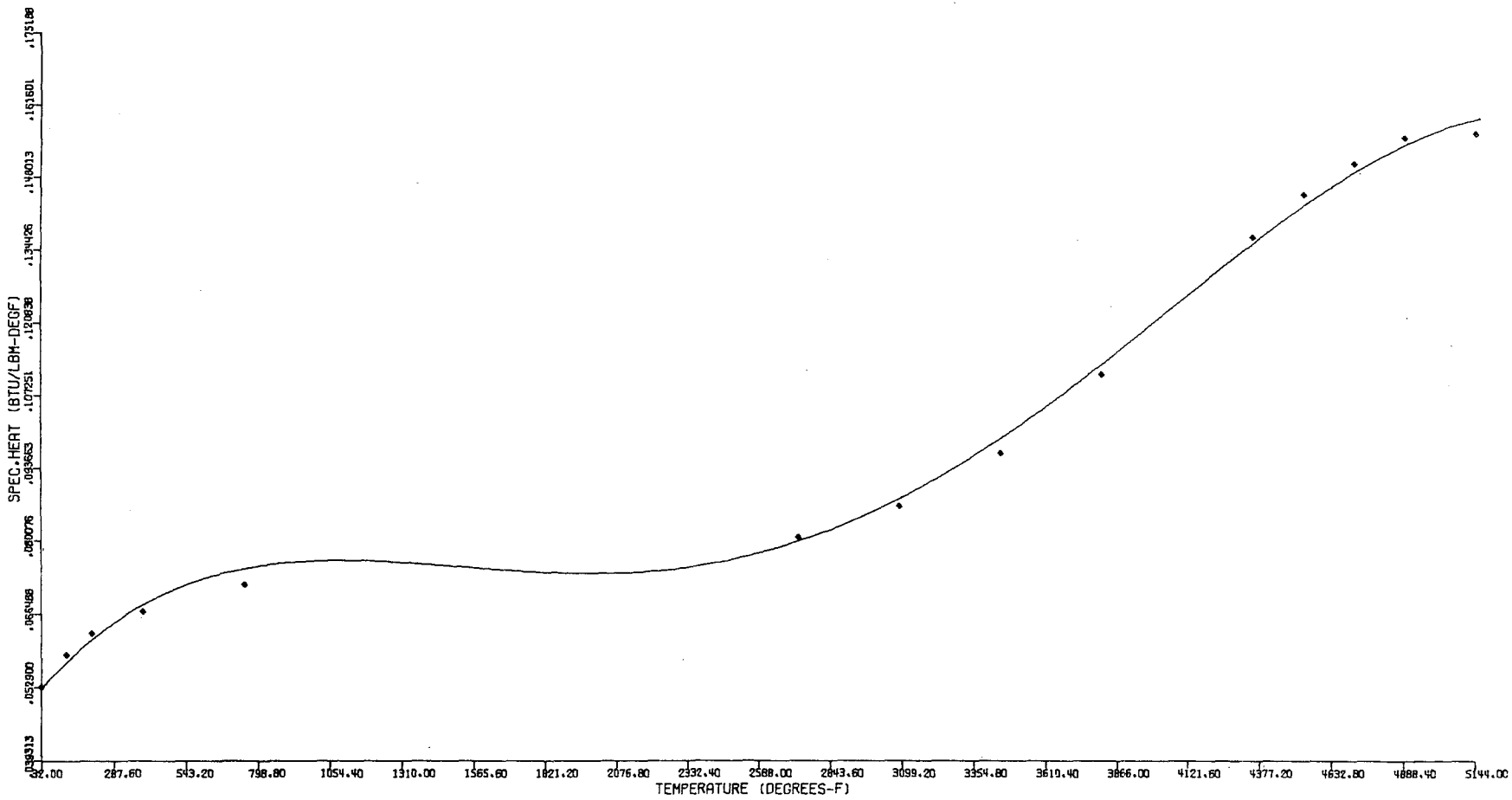


FIG. 4-6 THERMAL CONDUCTIVITY OF $UO_2$.

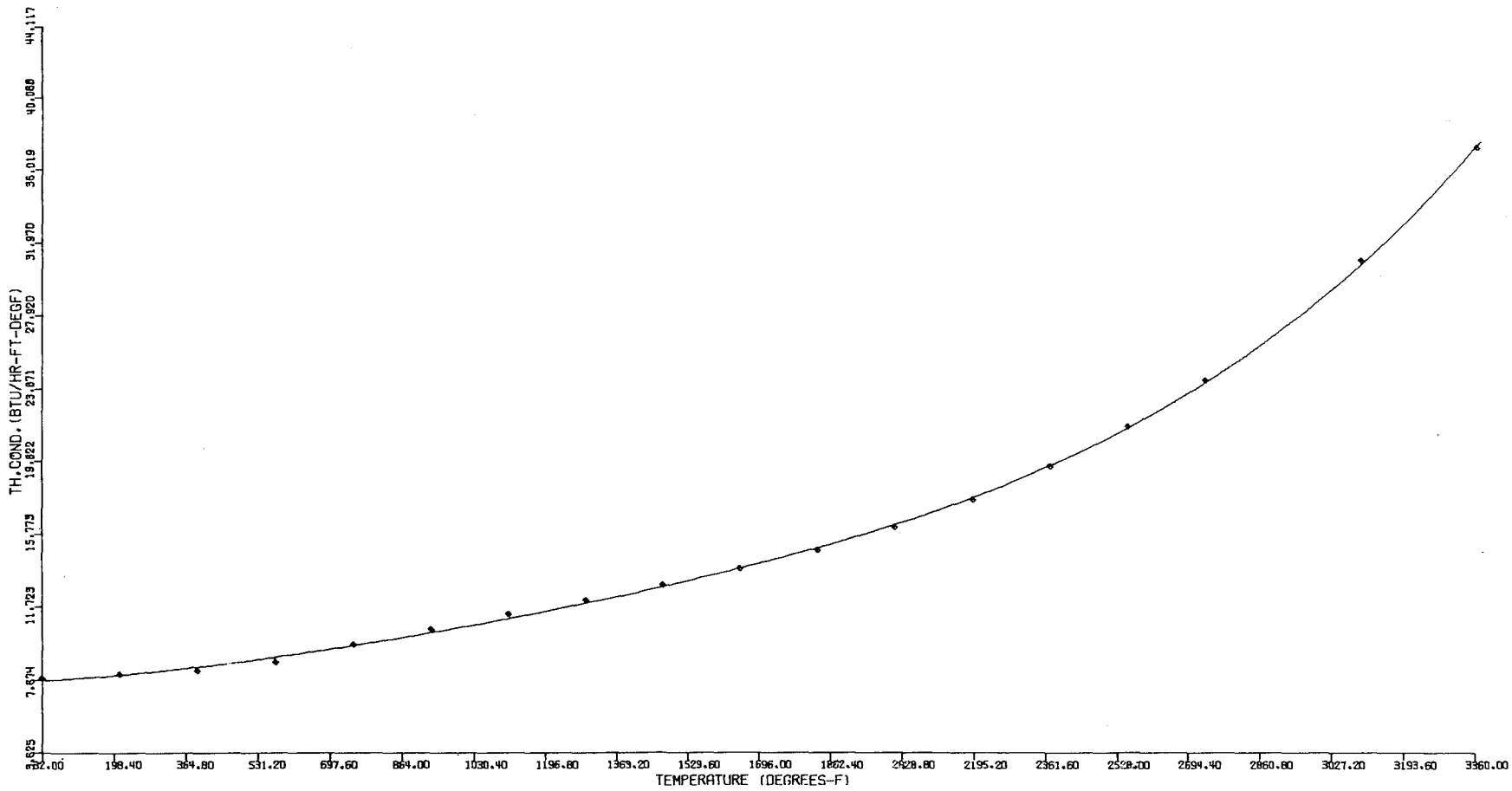


FIG. 4-7 THERMAL CONDUCTIVITY OF ZIRCALOY-4,

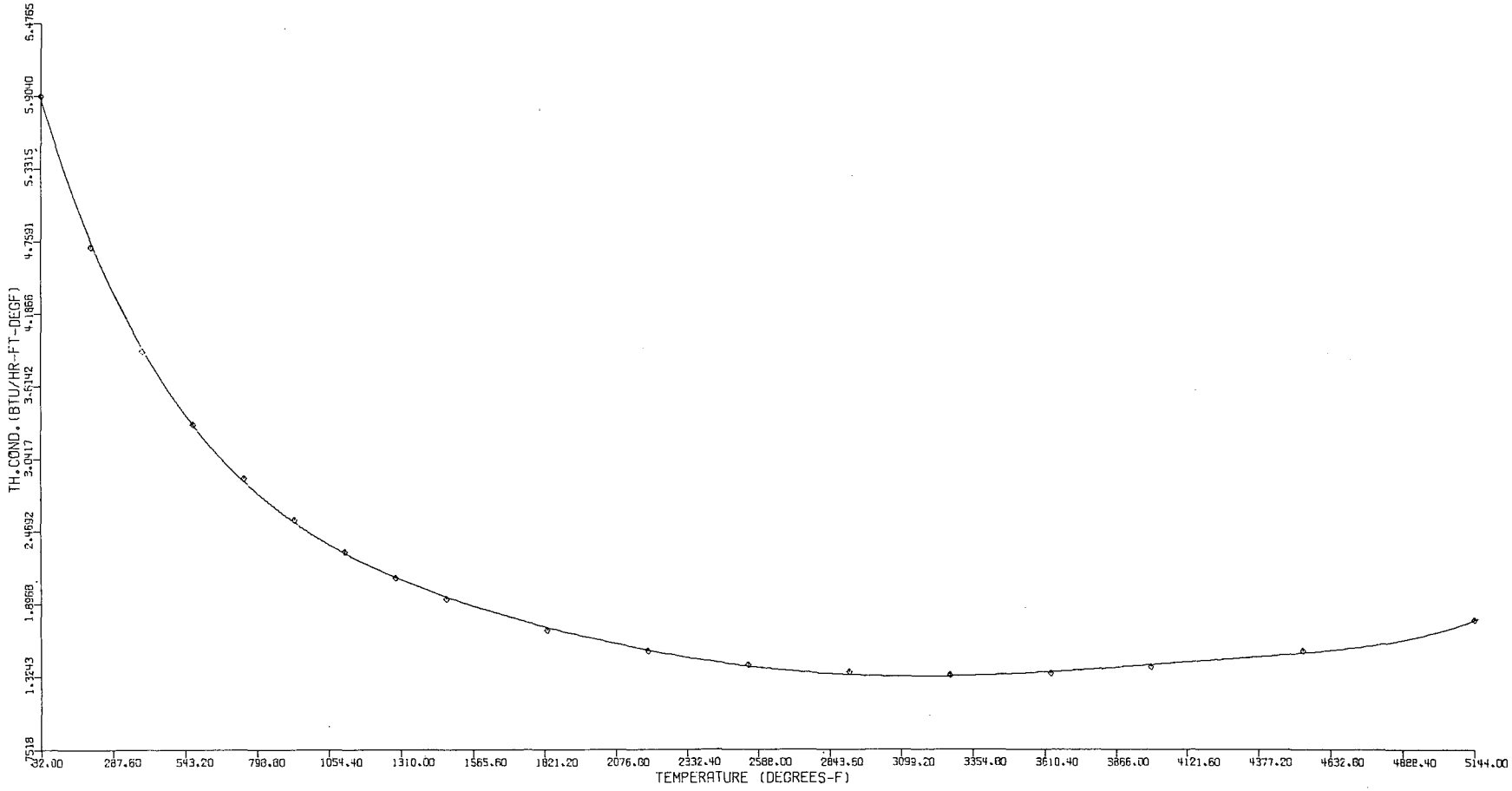


FIG. 4-8 SPECIFIC HEAT OF $UO_2$.

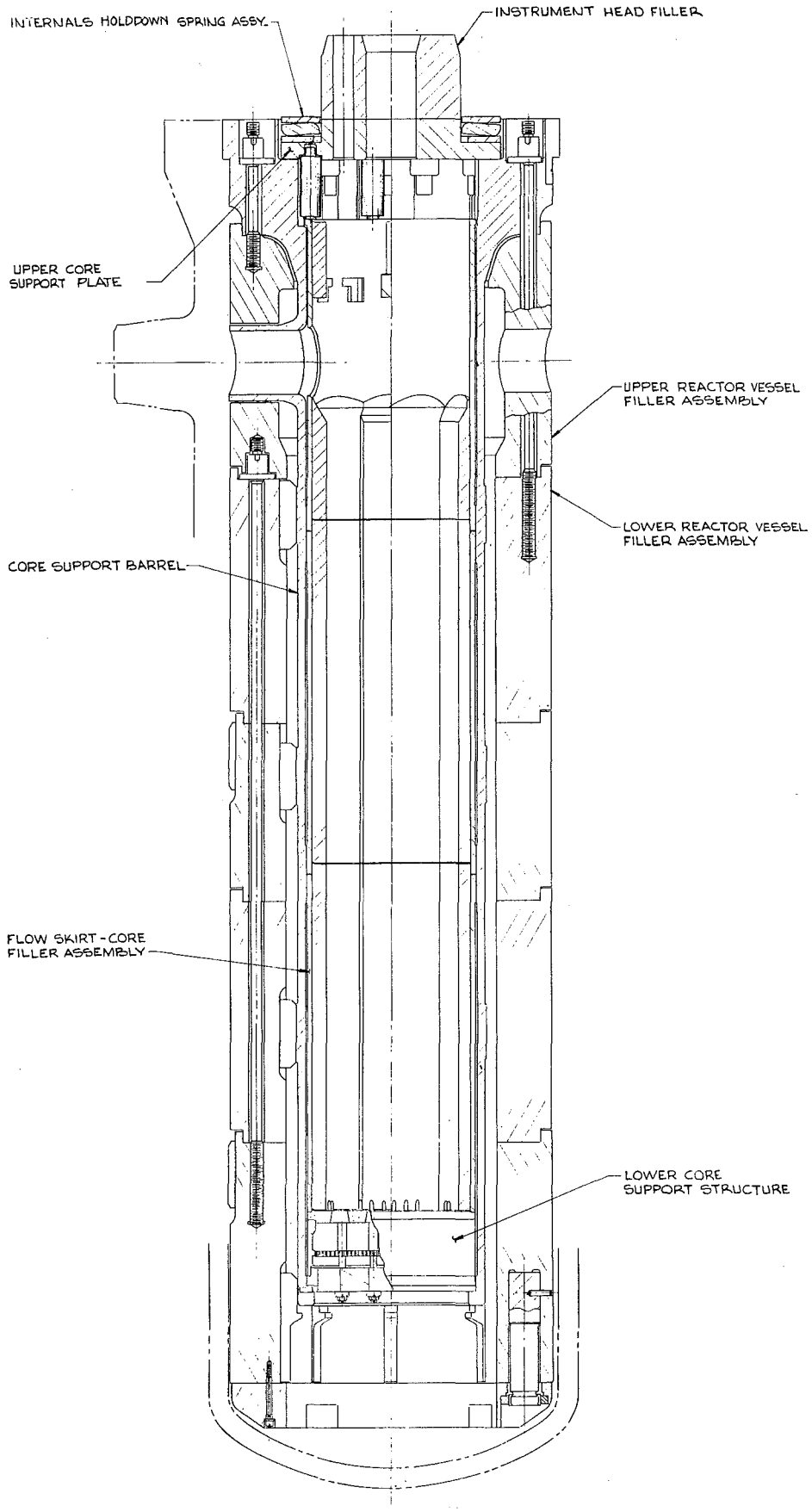


FIG. 4-9 LOFT INTERNALS.

(204508, A)

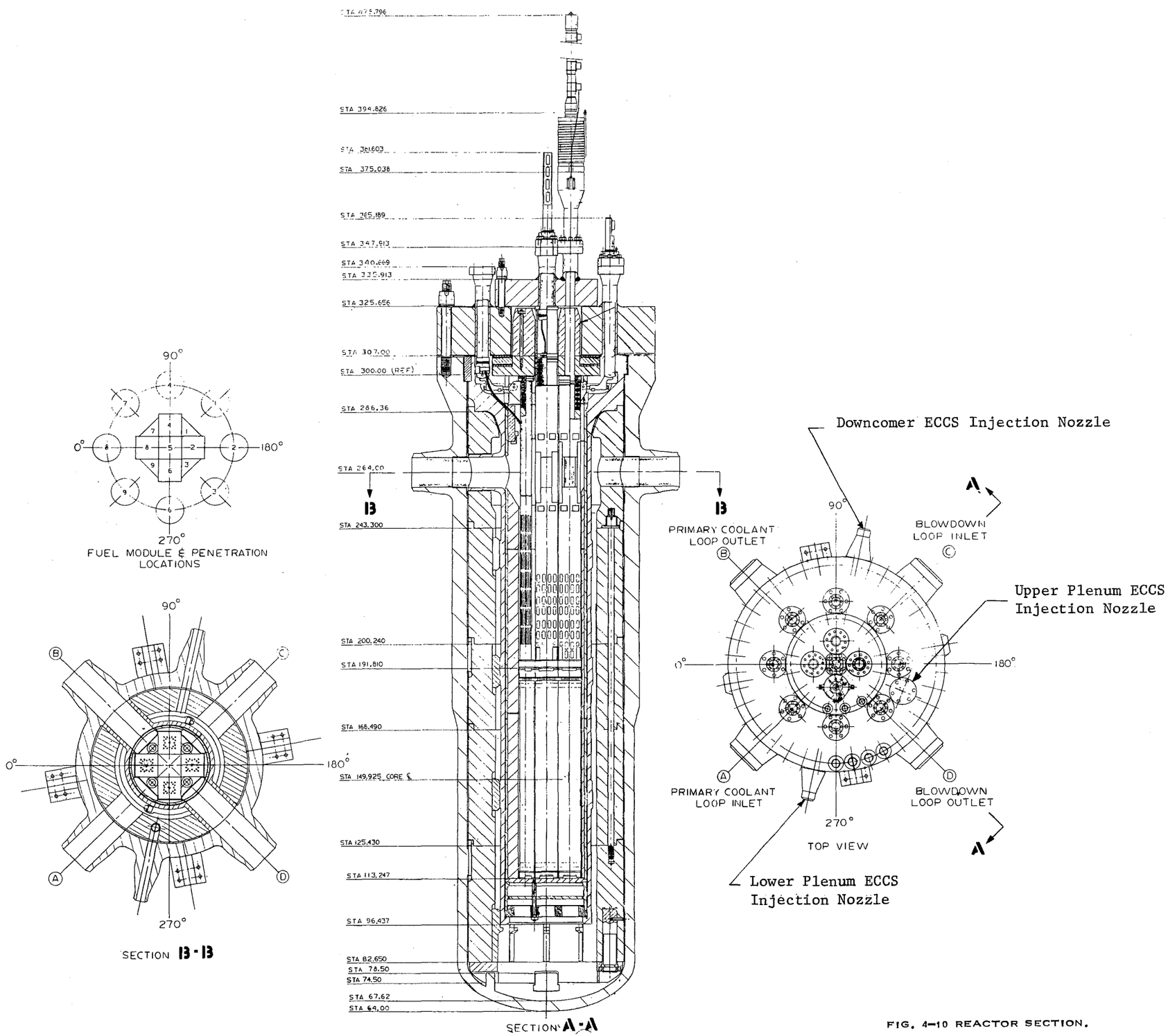


FIG. 4-10 REACTOR SECTION.



(204566, NR, MOD)

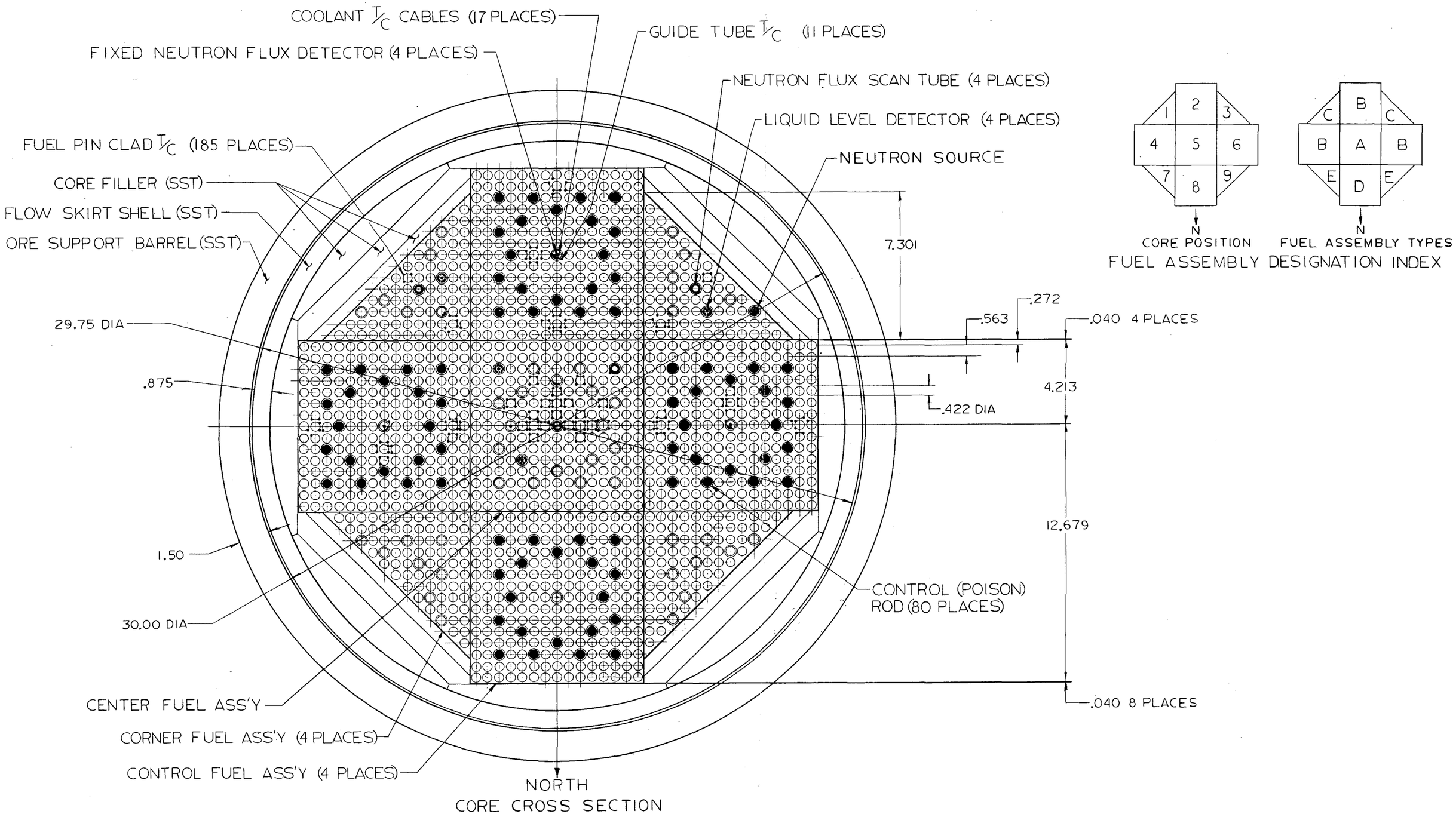


FIG. 4-11 CORE LAYOUT.

(204518, NR)

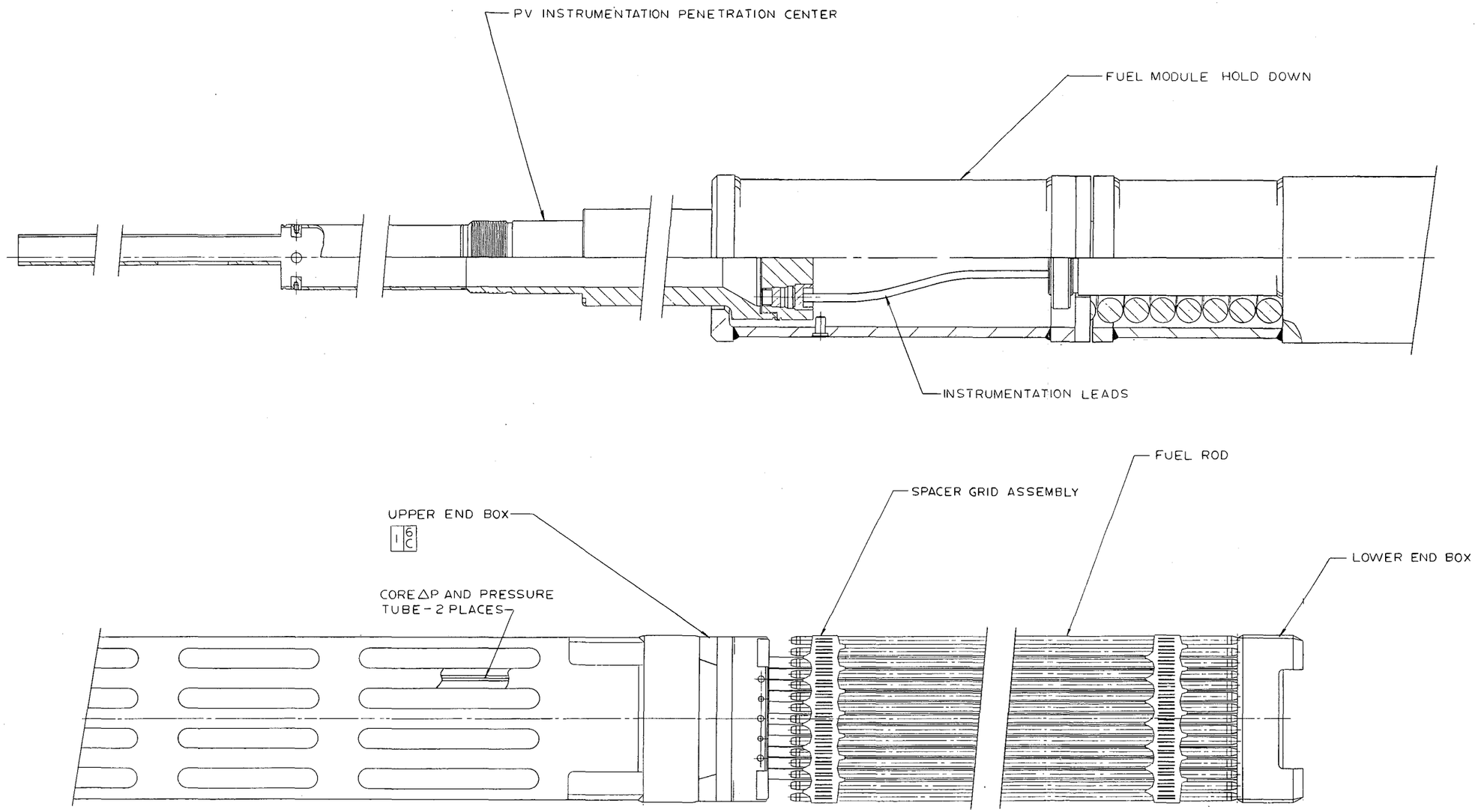


FIG. 4-12 LOFT CENTER FUEL MODULE.

(204487, 2/2, D, MOD)

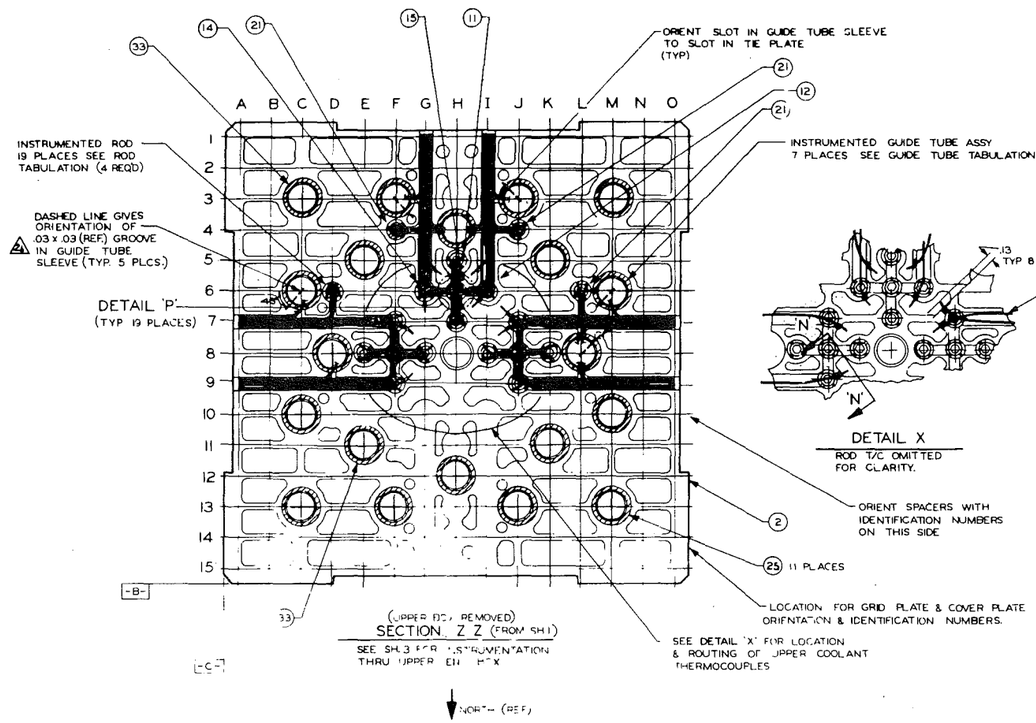


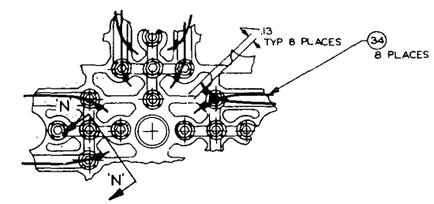


DETAIL X

ROD T/C OMITTED FOR CLARITY.

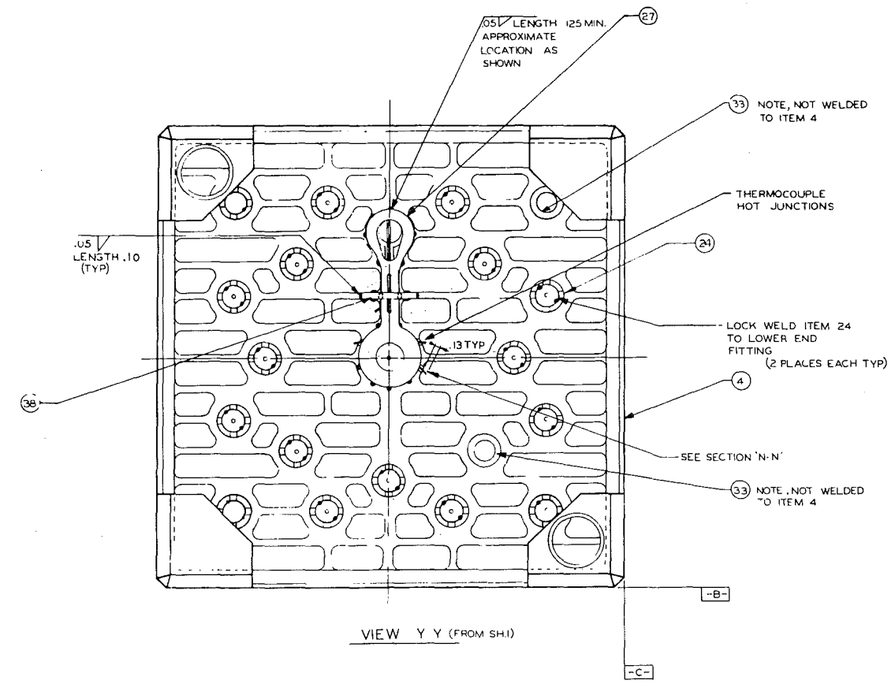


VIEW Y Y (FROM SH.1)

INSTRUMENTED GUIDE TUBE TABULATION

| GRID LOCATION | GUIDE TUBE INST | ITEM NO | |
|---|---|---|---|
| C6 | JN-300,485 ASSY 1 | 5 | * |
| D8 | JN-300,489 ASSY 1 | 10 | △ |
| F3 | JN-300,487 ASSY 6 | 9 | * |
| H4 | JN-300,487 ASSY 3 | 7 | |
| J3 | JN-300,487 ASSY 1 | 5 | * |
| L8 | JN-300,487 ASSY 4 | 8 | * |
| M6 | JN-300,487 ASSY 2 | 6 | * |

△

* SEE NOTE REF. ORIENTATION OF GROOVE IN GUIDE TUBE SLEEVE (CONTROLLING T/C RADIAL LOCATION)

INSTRUMENTED ROD TABULATION

| GRID LOCATION | INSTRUMENTED FUEL ROD ASSY | ITEM NO |
|---|---|---|
| D6 | JN-300,486 ASSY 14 | 21 |
| E8 | ASSY 1B | 16 |
| F4 | ASSY 14 | 21 |
| F7 | ASSY 2B | 17 |
| F8 | ASSY 5B | 20 |
| F9 | ASSY 4B | 19 |
| G6 | ASSY 4A | 14 |
| G8 | ASSY 3B | 18 |
| H5 | ASSY 1A | 11 |
| H6 | ASSY 5A | 15 |
| H7 | ASSY 3A | 13 |
| I6 | ASSY 2A | 12 |
| I8 | ASSY 3A | 13 |
| J4 | ASSY 14 | 21 |
| J7 | ASSY 4A | 14 |
| J8 | ASSY 5A | 15 |
| J9 | ASSY 2A | 12 |
| K8 | ASSY 1A | 11 |
| L6 | ASSY 14 | 21 |

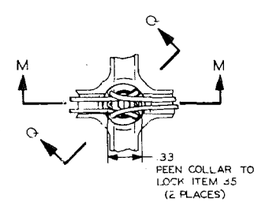


DETAIL 'P'

SCALE 2/1

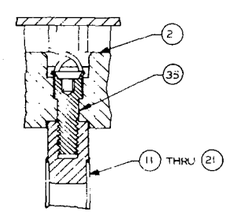


SECTION 'M-M'

SCALE 2/1

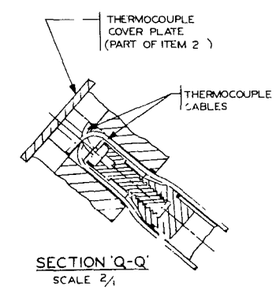


SECTION 'Q-Q'

SCALE 2/1

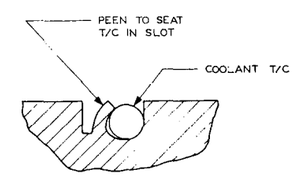


SECTION N-N

SCALE 10/1

FIG. 4-13 FUEL BUNDLE ASSEMBLY (TYPE A).

(JN 300329, 2/3, 2)

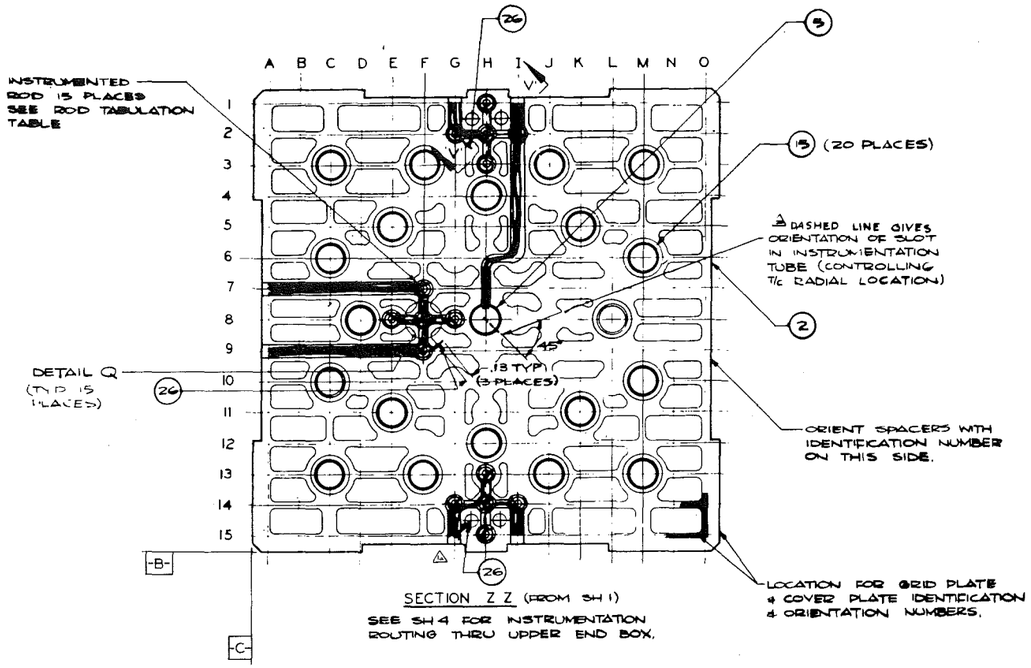


SECTION Z Z (FROM SH 1)

SEE SH 4 FOR INSTRUMENTATION ROUTING THRU UPPER END BOX.

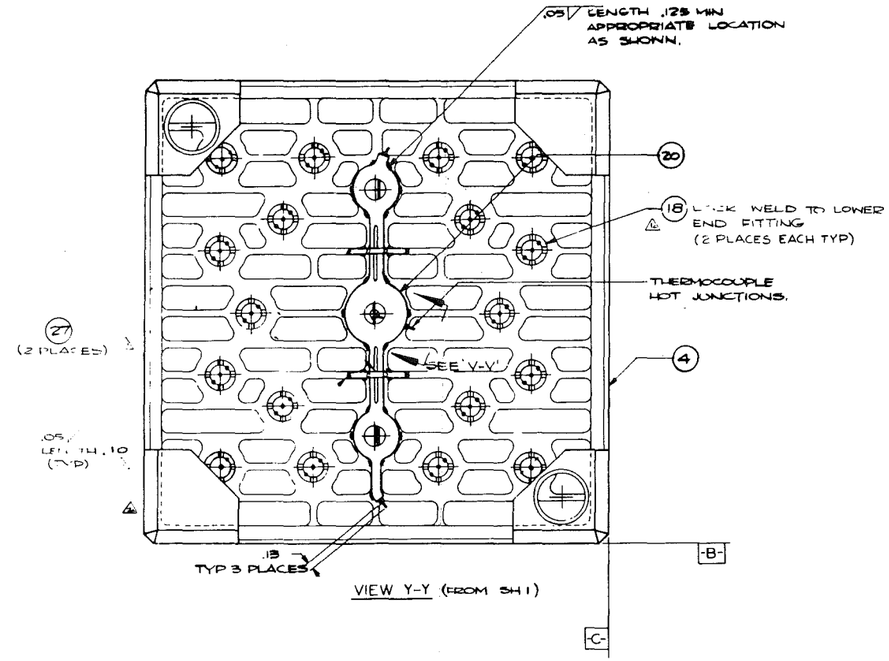


VIEW Y-Y (FROM SH 1)

ROD TABULATION TABLE

| GRID LOCATION | INSTRUMENT ROD ASSY (FUEL ROD TYPE) | ITEM NO. |
|---|---|---|
| E8 | JN-300,466 ASSY 6 | 7 |
| E7 | JN-300,466 ASSY 7 | 8 |
| F8 | JN-300,466 ASSY 10 | 11 |
| F9 | JN-300,466 ASSY 9 | 10 |
| G2 | JN-300 466 ASSY 13 | 14 |
| G8 | JN-300,466 ASSY 8 | 9 |
| G14 | JN-300,466 ASSY 6 | 7 |
| H1 | JN-300,466 ASSY 11 | 12 |
| H2 | JN-300,466 ASSY 10 | 11 |
| H3 | JN-300,466 ASSY 12 | 13 |
| H13 | JN-300,466 ASSY 7 | 8 |
| H14 | JN-300,466 ASSY 10 | 11 |
| H15 | JN-300,466 ASSY 9 | 10 |
| I2 | JN-300,466 ASSY 8 | 9 |
| I14 | JN-300,466 ASSY 8 | 9 |

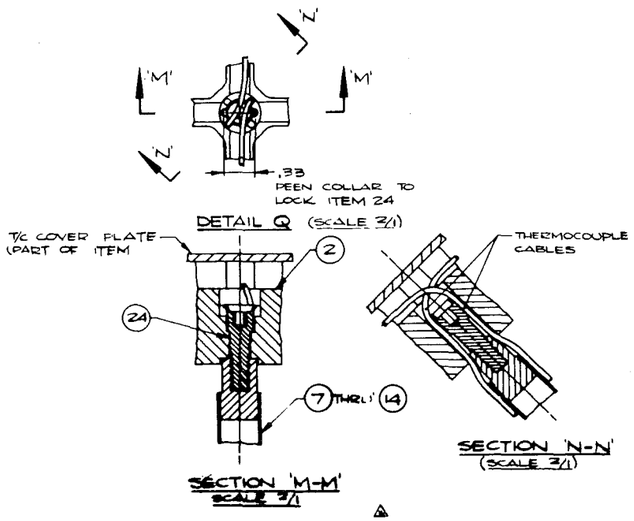


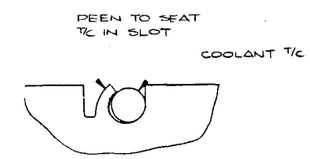


SECTION V-V
SCALE 10/1

FIG. 4-14 FUEL BUNDLE ASSEMBLY. (TYPE B).

(JN 300330, 2/3, 2)

NOTES: ⚠1. TYPE 'B' FUEL MODULE ONLY.

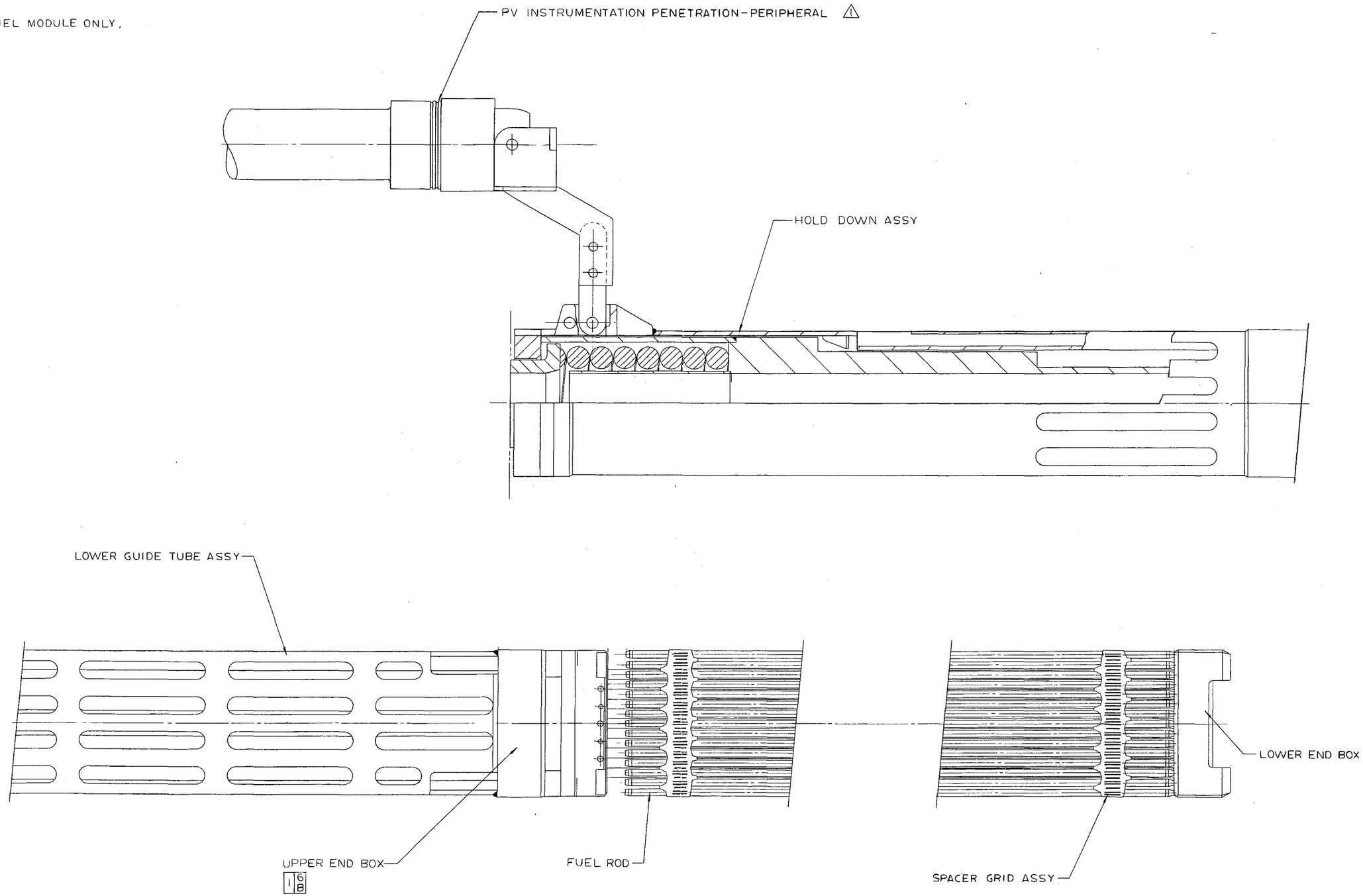


FIG. 4-15 CONTROL FUEL MODULE.

(204491, 2/2, D, MOD)

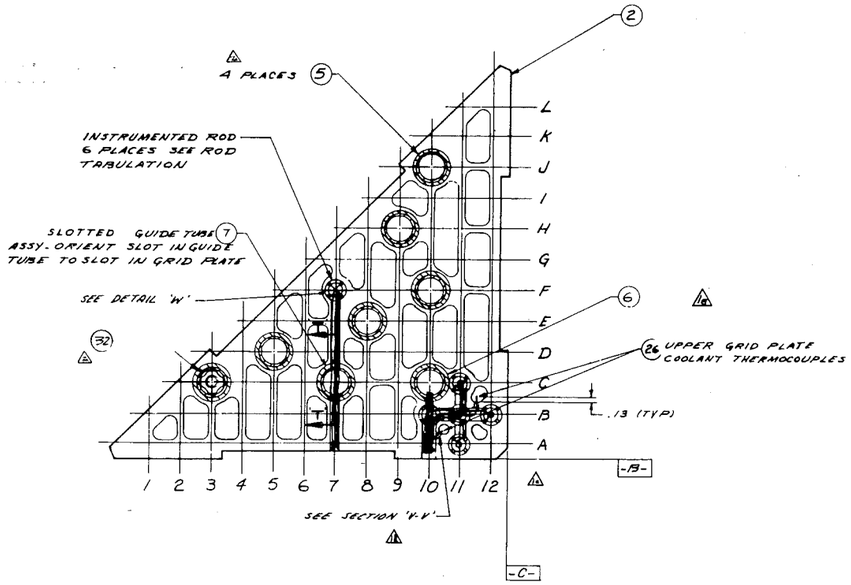


SECTION Z-Z (FROM SH. 1)

SEE SHEET 4 FOR T/C ROUTING
THRU UPPER END BOX

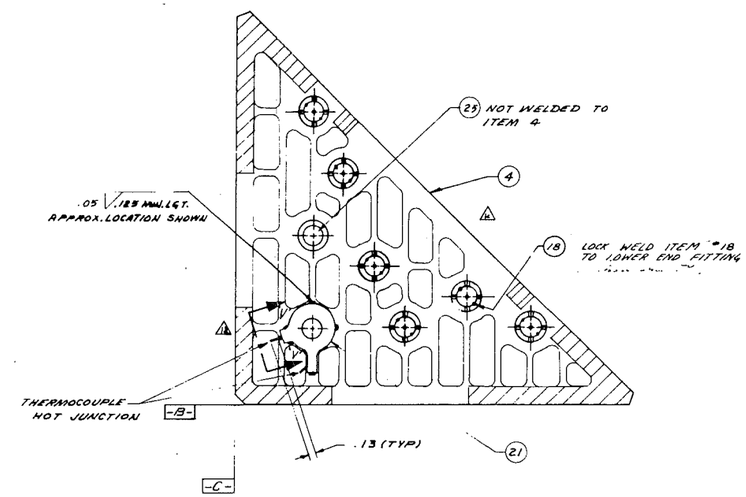


SECTION Y-Y (FROM SH. 1)

INSTRUMENTED ROD TABULATION

| PART NO. | GRID LOCATION | INSTRUMENTED FUEL ROD ASSY (ROD TYPE) |
|---|---|---|
| 13 | A 11 | JN-300,466 ASSY 13 |
| 11 | B 10 | JN-300,466 ASSY 11 |
| 10 | B 11 | JN-300,466 ASSY 10 |
| 12 | B 12 | JN-300,466 ASSY 12 |
| 9 | C 11 | JN-300,466 ASSY 8 |
| 14 | F 7 | JN-300,466 ASSY 14 |

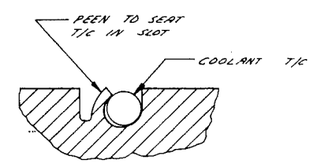


SECTION V-V

SCALE 10/1

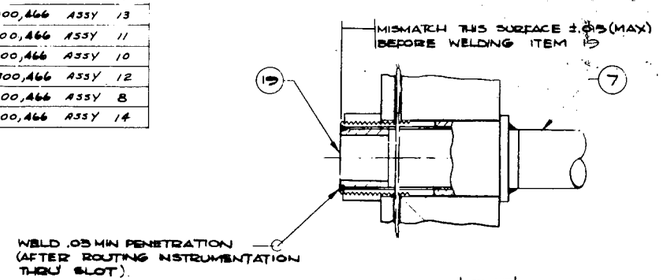


SECTION 'T-T'

SCALE 2/1

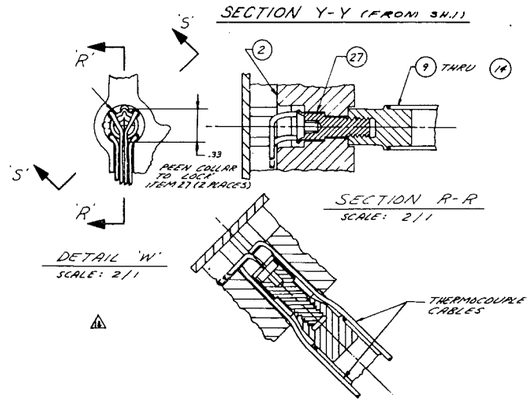


SECTION R-R

SCALE: 2/1

DETAIL 'W'

SCALE: 2/1

SECTION S-S

SCALE: 2/1

FIG. 4-16 FUEL BUNDLE ASSEMBLY (TYPE C).



(JN 300331, 2/3, 2)

NOTES: 1. LOCATED ONLY IN NO. 3 CORE POSITION.
2. TYPE 'C' FUEL MODULE ONLY.

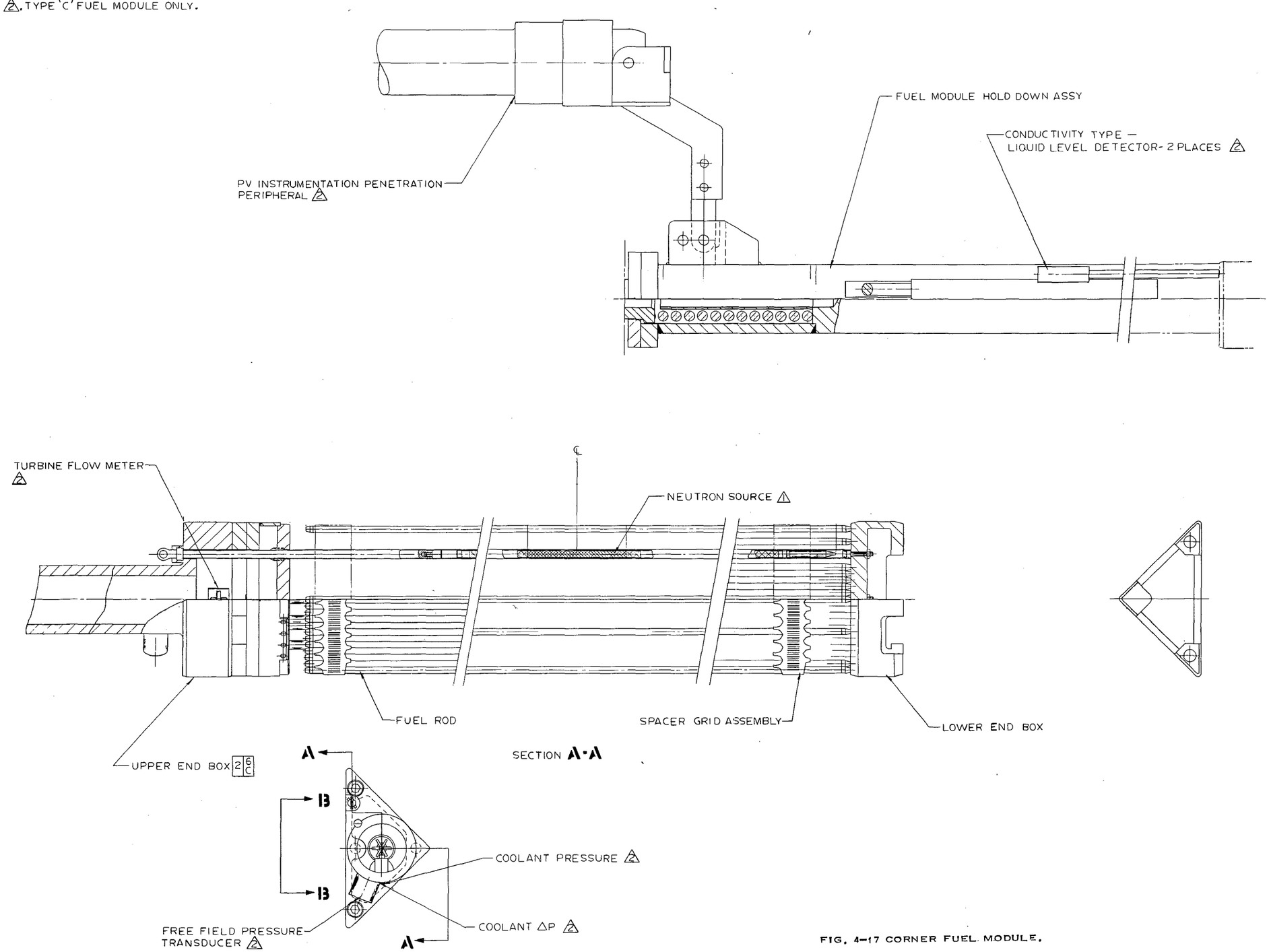


FIG. 4-17 CORNER FUEL MODULE.

(204037, 1/2, E, MOD)

NOTES: (UNLESS OTHERWISE SPECIFIED)

1. TOLERANCE: .XX ± .015 ; .XXX ± .005 ; ANGULAR ± 2°
2. DIM. & TOL. ARE IN ACCORDANCE WITH ANSI Y-14.5 1966
3. ONE PELLET (EITHER OR BOTH ENDS) IDENTICAL TO PART NO 2 EXCEPT FOR LG(.200 MIN.) MAY BE USED TO GIVE A TOTAL FUEL LG. AS SPECIFIED ON ASSEMBLY VIEW.
4. THE APPROPRIATE COMPONENT PART DWG REVISION NO SHALL BE REFLECTED ON A SEPARATE PARTS LIST.

| QTY. | PT. NO. | DESCRIPTION |
|---|---|---|
| | 1 | ASSEMBLY |
| AR | 2 | FUEL PELLET |
| 1 | 3 | CLADDING |
| 2 | 4 | INSULATOR DISC |
| 2 | 5 | END CAP |
| 1 | 6 | PLENUM SPRING |
| | | |

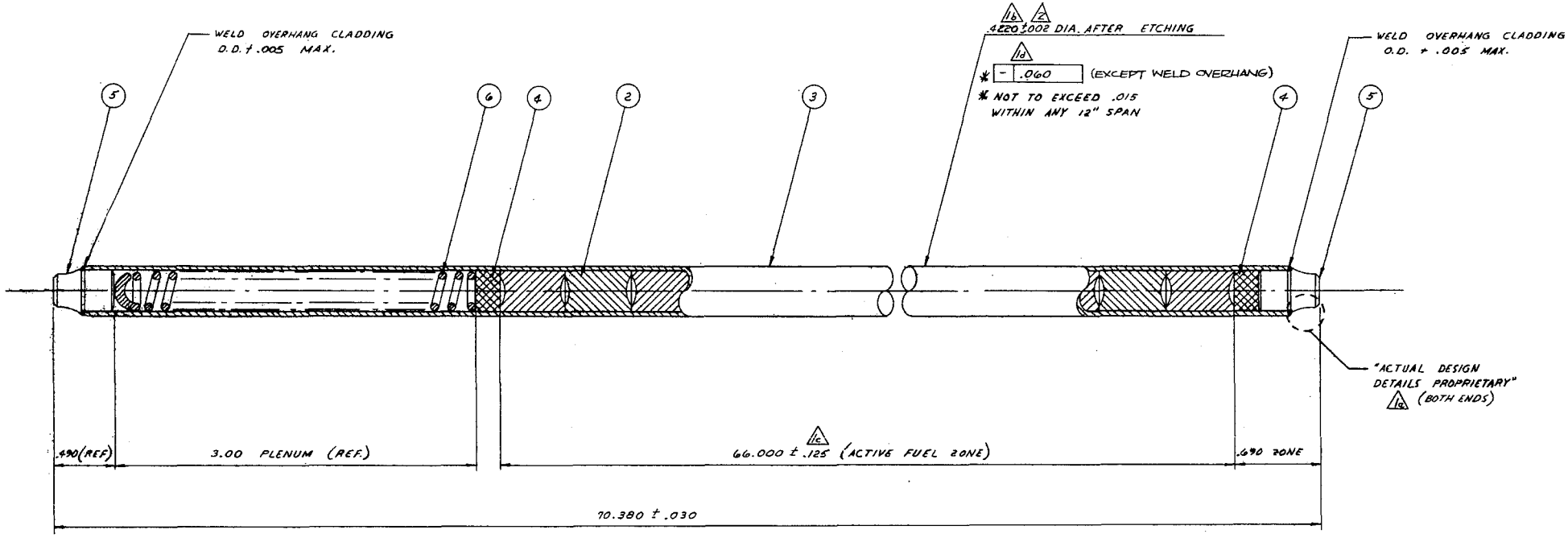


1 ASSEMBLY

FIG. 4-18 FUEL ROD.

(JN 300463, 2)

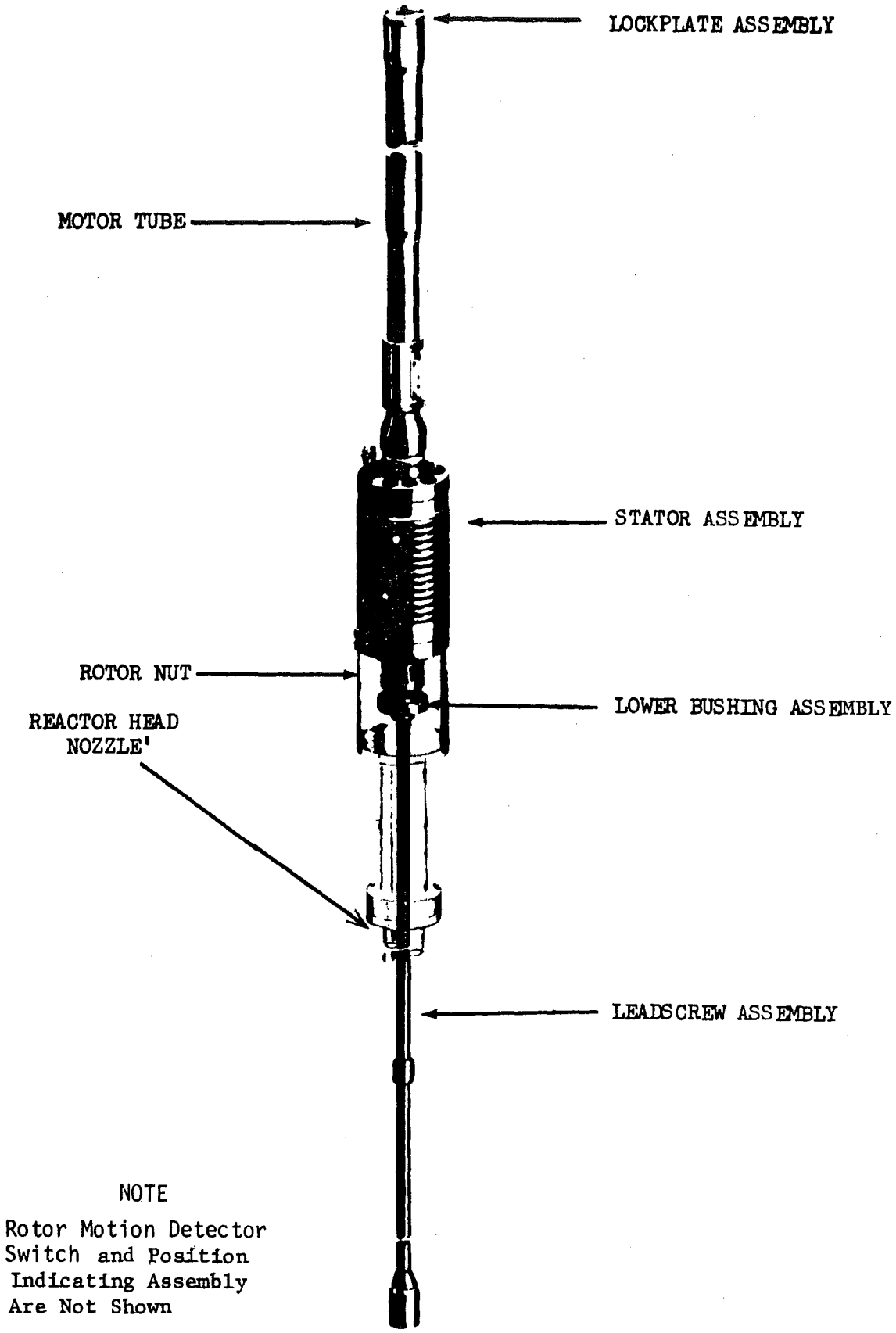


FIG. 4-19 CONTROL ROD DRIVE MECHANISM.

(CDD 1.1.1.8B)

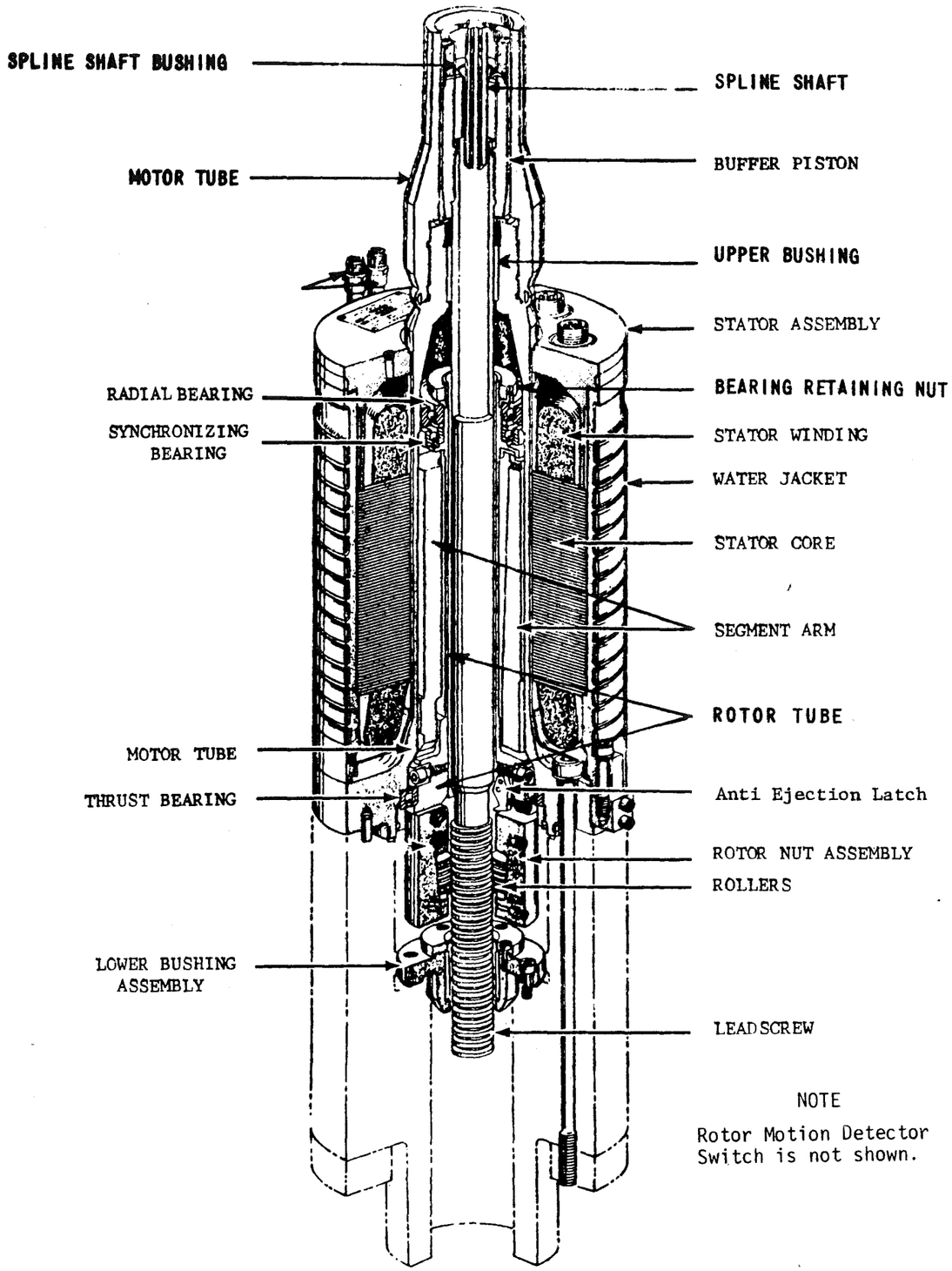


FIG. 4-20 MECHANISM OPERATING PARTS (CUTAWAY VIEW)

(CDD 1.1.1.8B)

NOTES:

RELAY FUNCTIONS

K1 - SCRAM A AUXILIARY RELAY
1. DE-ENERGIZES UNLATCH RELAYS WHEN SCRAM CIRCUIT BREAKER A OPENS

K2 - SCRAM B AUXILIARY RELAY
1. DE-ENERGIZES UNLATCH RELAYS WHEN SCRAM CIRCUIT BREAKER B OPENS

K9A, K9B - UNLATCH RELAYS
1. PROVIDE UNLATCH COMMAND SIGNAL TO MOTOR PROGRAMMERS
2. INHIBIT OUT AND OUT ENABLE COMMANDS DURING SCRAM
3. RESET PULSE TOTALIZERS AND ROD POSITION INDICATORS ON SCRAM
4. INHIBIT LATCH COMMAND DURING SCRAM
5. REQUIRE SYSTEM RESET FOLLOWING SCRAM

K15 - ROD BOTTOM RELAY
1. INHIBITS SYSTEM RESET UNLESS ALL RODS ARE BOTTOMED
2. INHIBITS LATCH COMMAND UNLESS ALL RODS ARE BOTTOMED

K16 - SYSTEM RESET RELAY (LATCHING RELAY)
1. INHIBITS OUT AND OUT ENABLE COMMANDS FOLLOWING SCRAM
2. INHIBITS IN COMMAND FOLLOWING SCRAM

K17 - LATCH RELAY
1. DISABLES LATCH SWITCH AFTER ALL RODS ARE LATCHED
2. INHIBITS OUT AND OUT ENABLE COMMANDS UNLESS ALL RODS ARE LATCHED

K21 - MASTER FAULT RELAY
1. OPERATES CONTROL PANEL LAMP AND ANNUNCIATOR

K30 - MASTER STATOR OVER-TEMPERATURE RELAY
1. PROVIDES STATOR OVER-TEMPERATURE SIGNAL TO MASTER FAULT SUBSYSTEM

K31 - INDIVIDUAL STATOR OVER-TEMPERATURE RELAY (NOT SHOWN)
1. USED TO LOCATE INDIVIDUAL STATOR OVER-TEMPERATURE

K42 - PULSE TOTALIZERS RESET VERIFICATION RELAY
1. INHIBITS SYSTEM RESET UNLESS ALL PULSE TOTALIZERS HAVE BEEN RESET

K43 - ROD POSITION INDICATORS RESET VERIFICATION RELAY
1. INHIBITS SYSTEM RESET UNLESS ALL ROD POSITION INDICATORS HAVE BEEN RESET

2. MAJOR SWITCH FUNCTIONS

MANUAL SCRAM SWITCHES
SCRAM ALL CONTROL RODS

LATCH SWITCH
TRANSMITS LATCH COMMAND SIGNAL TO ALL MOTOR PROGRAMMERS

ROD SELECTOR SWITCH
ENABLES INDIVIDUAL RODS OR PROGRAM SELECTOR SWITCH

PROGRAM SELECTOR SWITCH
PERMITS SELECTION OF CERTAIN COMBINATIONS OF RODS FOR SIMULTANEOUS MOVEMENT

ROD CONTROL SWITCH
INSERTS OR WITHDRAWS SELECTED RODS

LOGIC POWER DISCONNECT SWITCH
INTERRUPTS LOGIC SUPPLY VOLTAGES AND 115 VAC TO SYSTEM (EXCEPT ROD LOCATION CIRCUITRY)

3. ROD CONTROL SYSTEM PANELS

B-T305 REACTOR PLANT CONTROL PANEL
B-T308-2 SYSTEM POWER DISTRIBUTION PANEL
B-T308-3 & 4 SYSTEM LOGIC PANELS
B-T308-5 MOTOR POWER SUPPLY PANEL

4. SEE DRAWINGS 204740, 204741, SHTS 2 & 3 & 204742

5. PLANT PROTECTION SYSTEM COMPONENTS ARE QUALITY ASSURANCE ESSENTIALITY LEVEL I. ALL OTHERS COMPONENTS ARE ESSENTIALITY LEVEL II.

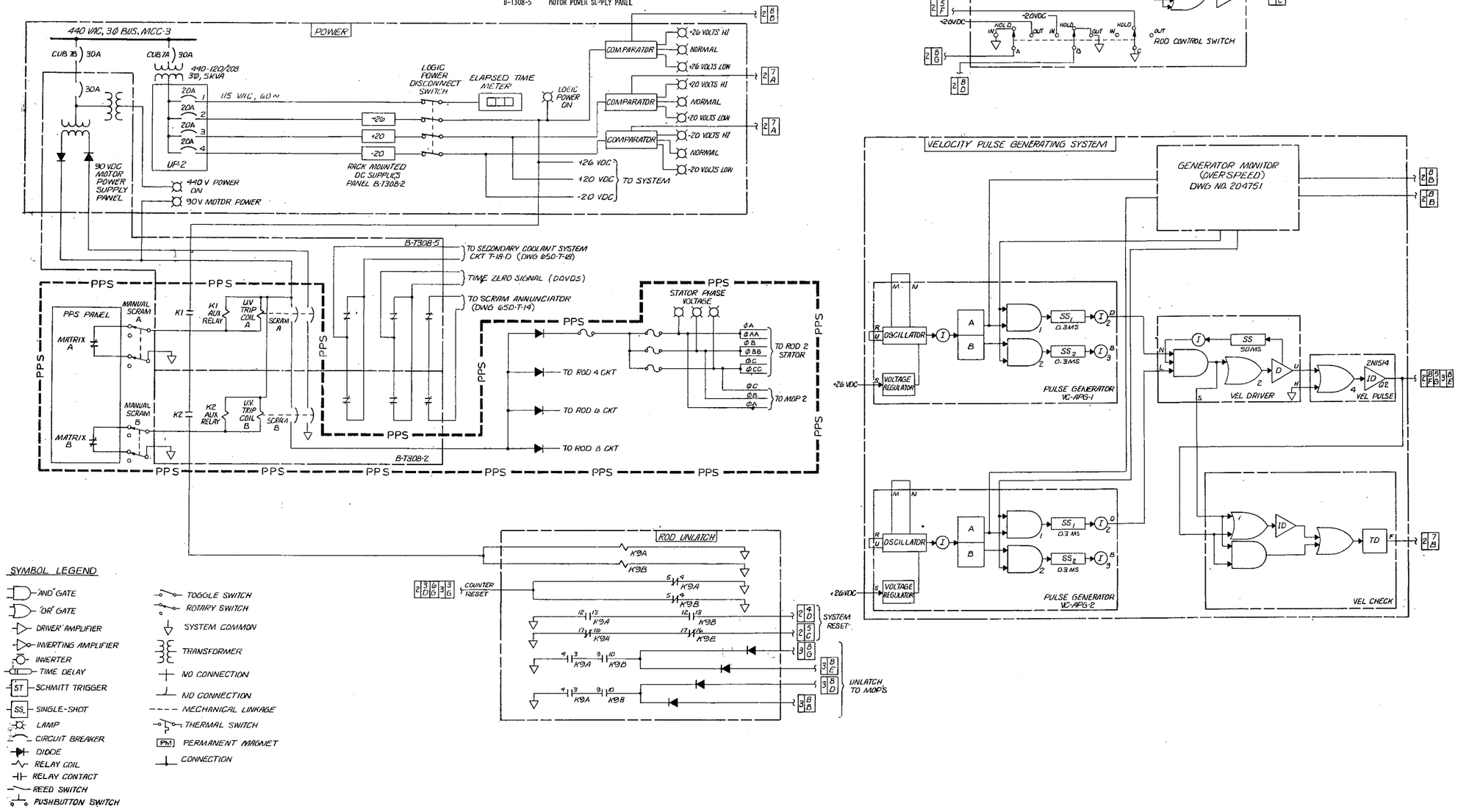


FIG. 4-21A CONTROL ROD CONTROL SYSTEM.

(204741, 1/3)

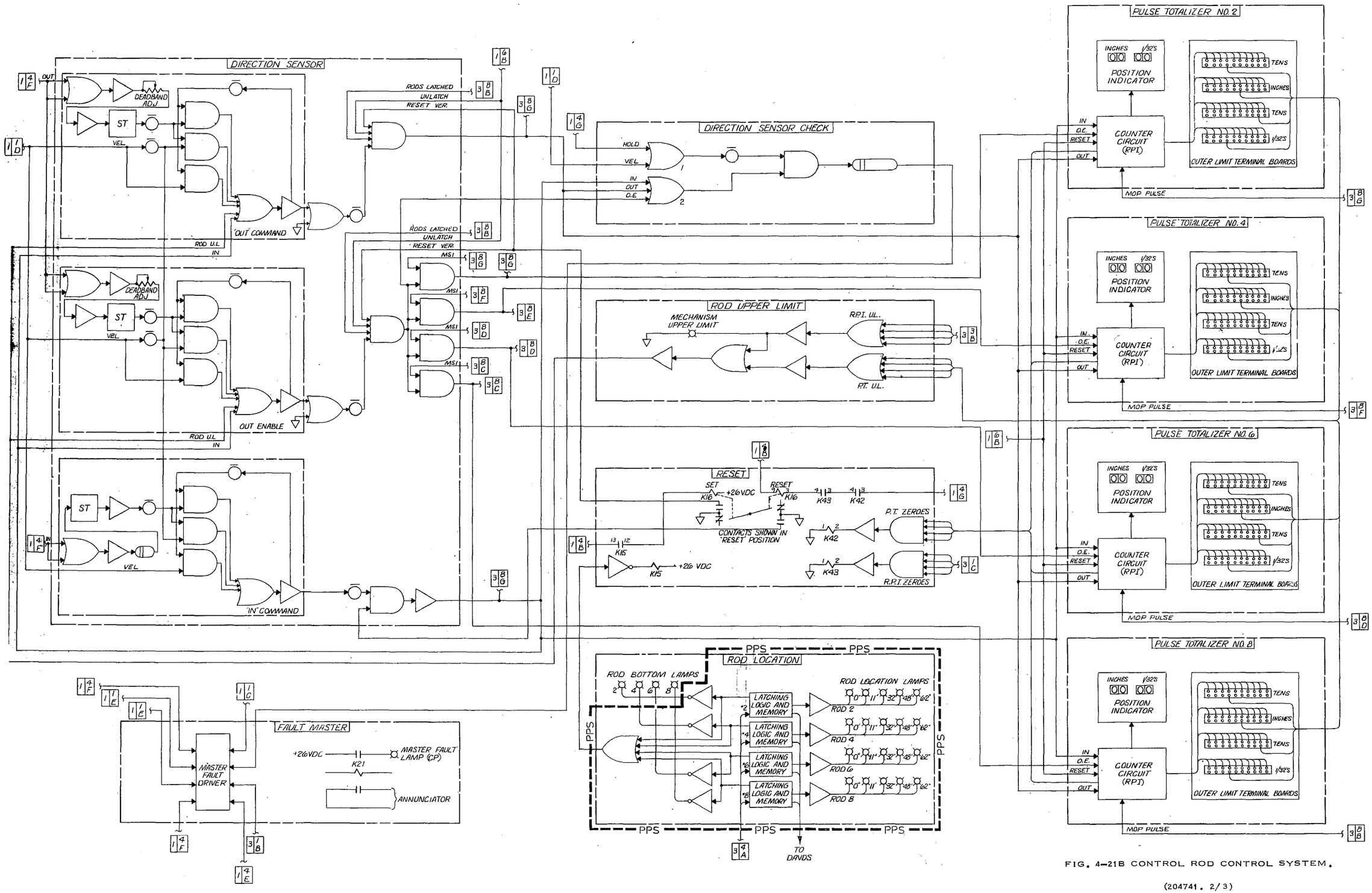


FIG. 4-21B CONTROL ROD CONTROL SYSTEM.

(204741. 2/3)

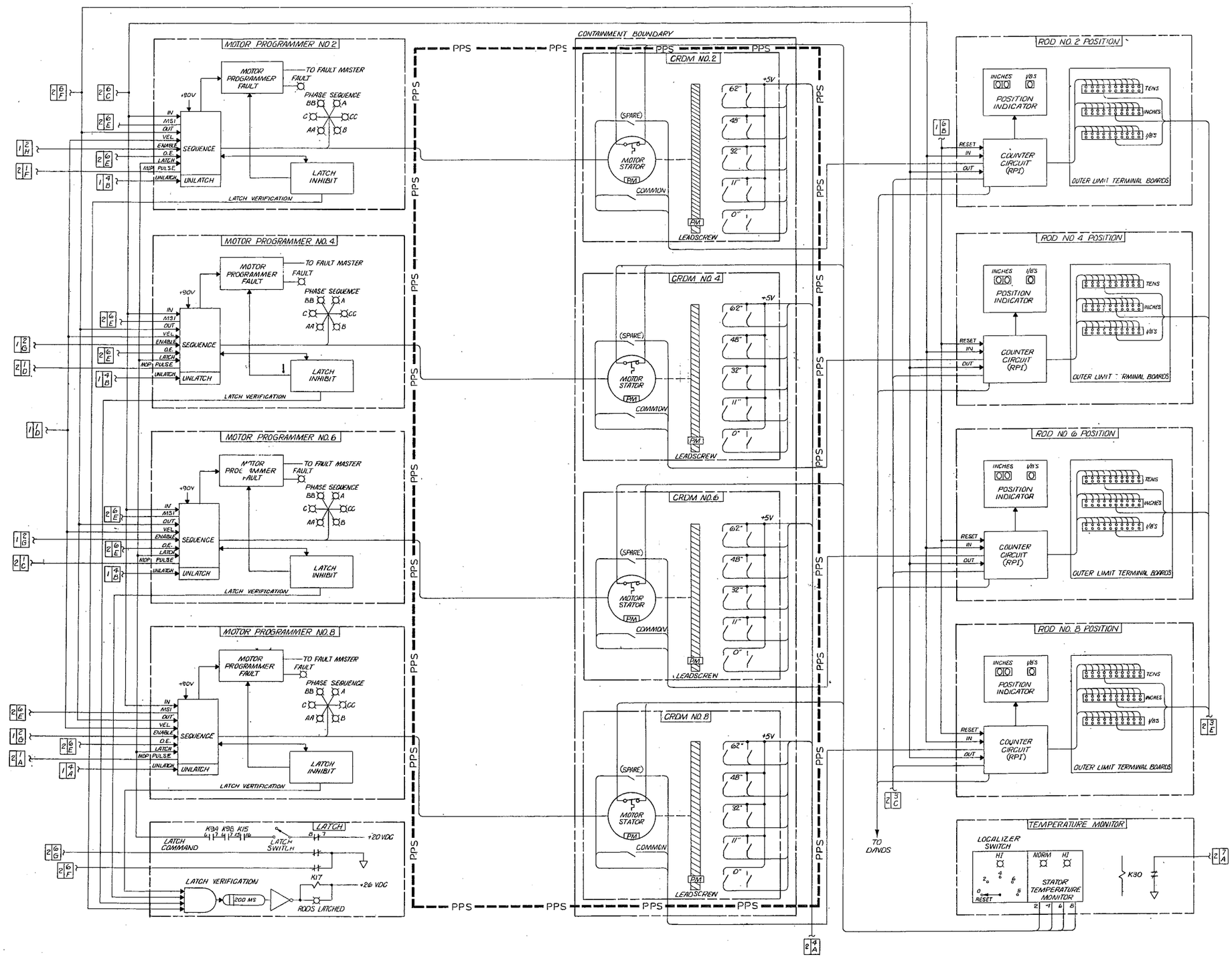


FIG. 4-21C CONTROL ROD CONTROL SYSTEM.

(204741, 3/3)

CONTENTS


5.0 MOBILE TEST ASSEMBLY . . . . . 5-1

5.1 Design Basis . . . . . 5-1

5.1.1 Performance Objectives . . . . . 5-1
5.1.2 Design Criteria . . . . . 5-1
5.1.3 Codes and Standards . . . . . 5-11

5.2 System Design and Operation . . . . . 5-13

5.2.1 General Description of Major MTA Components . . . . . 5-13
5.2.2 Structure Support . . . . . 5-14

5.2.2.1 Railroad Dolly . . . . . 5-14
5.2.2.2 Support Frame . . . . . 5-15

5.2.3 Radiation Shield Tank . . . . . 5-16

5.2.3.1 Radiation Limits . . . . . 5-16
5.2.3.2 Radiation Shielding . . . . . 5-17

5.2.4 Heat Removal Systems . . . . . 5-17

5.2.4.1 Primary Coolant System . . . . . 5-17

5.2.4.1.1 General Description . . . . . 5-17
5.2.4.1.2 Reactor Vessel . . . . . 5-22
5.2.4.1.3 Steam Generator . . . . . 5-24
5.2.4.1.4 Pressurizer . . . . . 5-25
5.2.4.1.5 Primary Coolant Pumps . . . . . 5-28
5.2.4.1.6 Primary Coolant System Water Chemistry . . . . . 5-31

5.2.4.2 Purification System . . . . . 5-31
5.2.4.3 Emergency Core Cooling System . . . . . 5-31

5.2.5 Blowdown System . . . . . 5-32
5.2.6 Auxiliary Systems . . . . . 5-36

5.2.6.1 Primary Coolant Purification System . . . . . 5-36
5.2.6.2 Primary Coolant Addition and Control System . . 5-36
5.2.6.3 Primary Component Cooling System . . . . . 5-37
5.2.6.4 Primary Coolant Sampling System . . . . . 5-37

5.2.7 Instrumentation and Controls . . . . . 5-37

5.3 System Design Evaluation . . . . . 5-37

5.4 Tests, Inspections, Maintenance, and Requalification . . . . . 5-38

5.4.1 Integrity Verification . . . . . 5-39

5.4.2 Normal Maintenance . . . . . 5-40
5.4.3 Requalification . . . . . 5-40

5.5 Special Features Having Safety Significance . . . . . 5-41

5.5.1 MTA Design (First Level of Safety) . . . . . 5-41
5.5.2 Protective Systems (Second Level of Safety) . . . . . 5-43

5.6 References . . . . . 5-44

## FIGURES

5-1. Primary coolant system layout (plan view) . . . . . 5-46

5-2. Primary coolant system layout (elevation) . . . . . 5-47

5-3. Plan view of MTA in containment vessel . . . . . 5-48

5-4. General MTA shielding . . . . . 5-49

5-5. Primary coolant system P and ID . . . . . 5-50

5-6. Typical "Self" drag disc valve details . . . . . 5-51

5-7. LOFT reactor vessel . . . . . 5-52

5-8. LOFT pressurizer details . . . . . 5-53

5-9. LOFT primary pump . . . . . 5-54

5-10. LOFT pump coastdown . . . . . 5-55

5-11a. Blowdown suppression system P and ID . . . . . 5-56

5-11b. Blowdown suppression system P and ID . . . . . 5-57

5-11c. Blowdown suppression system P and ID . . . . . 5-58

5-11d. Blowdown suppression system P and ID . . . . . 5-59

## TABLES

5-I. Primary Coolant System Volume Ratios . . . . . 5-2

5-II. Primary and Secondary Systems Water Chemistry . . . . . 5-6

5-III. Summary of Operating Transient Conditions . . . . . 5-7

5-IV. Codes and Classifications of Major MTA Fluid System Components . . . . . 5-12

5-V. Reactor Vessel Design Parameters . . . . . 5-23

5-VI. Steam Generator Design Parameters . . . . . 5-24

5-VII. Specific Features and Performance Data of Pressurizer System. . 5-26

5-VIII. LOFT Primary Coolant Pump Design Parameters . . . . . 5-30

# 5.0 MOBILE TEST ASSEMBLY

## 5.1 Design Basis

### 5.1.1 Performance Objectives

The MTA contains a PWR steam supply system capable of fulfilling the experimental program objectives outlined in Section 2.1. This system is representative of current-generation commercial powerplants to the maximum extent practicable.

### 5.1.2 Design Criteria

The following paragraphs state or imply important MTA design criteria and how those criteria have been implemented[1,2].

(1) The experimental reactor system and primary coolant system are of the pressurized-light-water-reactor type designed for a minimum of 26 LOCEs and an objective of 260 LOCEs. The MTA is to be capable of sustained or intermittent operation over a 30-year design lifetime with reasonable maintenance. The reactor core is designed to operate continuously or intermittently for a minimum of 2000 hr at full power.

(2) The reactor system equipment is designed to utilize core materials that have physical, chemical, and metallurgical properties representative of those in current use in LPWRs.

(3) The equipment has been designed with reactor system and primary coolant system components that are sized and spaced to provide core thermal-time properties representative of LPWRs, especially during LOCEs. (See Table 5-I.)

(4) Core components are designed to provide flow paths through the core which are characteristic of those in an LPWR.

(5) The core is designed to provide suitable locations for experimental instrumentation.

(6) The reactor system and primary coolant system equipment is designed for an initial active core length of 5.5 ft to

TABLE 5-I

PRIMARY COOLANT SYSTEM VOLUME RATIOS

| Item | Ratio | Range in LPWRs | LOFT |
|---|---|---|---|
| 1. | Total primary coolant volume to MW(t) | 3.6 to 4.7 | 4.9 |
| 2. | Total reactor volume to total primary coolant volume | 0.33 to 0.37 | 0.45 |
| 3. | Active core volume to total primary coolant volume | 0.05 | 0.04 |
| 4. | Steam generator primary volume to total primary coolant volume | 0.31 to 0.34 | 0.18 |
| 5. | Primary coolant piping volume to total primary coolant volume | 0.09 to 0.16 | 0.13 |
| 6. | Pressurizer steam volume to total primary coolant volume | 0.06 | 0.042 |
| 7. | Pressurizer liquid volume to total primary coolant volume | 0.07 to 0.09 | 0.083 |
| 8. | Primary coolant pump volume to total primary coolant volume | 0.0175 to 0.0408 | 0.026 |

permit attaining the correct cladding and fuel temperature response during blowdown experiments. For added flexibility, the reactor pressure vessel is designed to accept later cores of up to a 12-ft maximum length.

(7) The reactor system and primary coolant system are designed for operation at 2500 psia and 650°F. This permits operation at typical LPWR temperatures and pressures.

(8) The reactor system and primary coolant system have an adjustable primary coolant flow rate by means of pump speed control. The primary coolant pumps are capable of being shut down at any time during the experimental sequence. Coastdown characteristics typical of pumps for LPWRs are provided by the use of flywheels on the pump drive MG sets.

(9) The secondary coolant system is designed in such a way that it can be controlled during the experimental sequence in a manner that permits simulation of behavior (with

respect to the heat transferred to, or removed from, the primary system) of such a system in an LPWR.

(10) The reactor system and primary coolant system are designed for 55-MW(t) nominal power with one primary coolant system loop plus a blowdown system loop for experimental rupture simulation purposes.

(11) The MTA is designed in such a way that the primary coolant system can be ruptured by command signal to simulate the coolant fluid behavior in a multiloop PWR system following inlet and/or outlet piping ruptures. The requirements for this rupture (blowdown) subsystem have been met by the design as follows:

(a) The blowdown system is designed with components that are sized and spaced to provide core thermal-time properties representative of LPWRs during hypothesized LOCAs.

(b) The blowdown system is capable of simulating ruptured loops representative of the designs of all major manufacturers by minor modifications.

(c) The blowdown system is, by virtue of its flexibility of design, capable of investigating the effects of reactor vessel-to-break distance, ruptured pipe length-to-diameter ratio, and simulated break size on simulated LOCA performance.

(d) The loss coefficients of the blowdown system are designed to give, at scaled flow rates, the same pressure drops from point to point in the system as would exist in an LPWR during a LOCA.

(e) The blowdown system is designed in such a way that break flow rate during a LOCE is controlled by that portion of the system designed to simulate the broken loop of an LPWR.

(f) The blowdown system is designed for the same operational transients as the primary coolant system, of which it is a part.

(12) The reactor system is designed to have an ECCS that consists of an HPIS, an accumulator system, and an LPIS which provides design and performance features representative of those found in LPWRs. This ECCS is capable of providing plant protection in case of an accidental loss of coolant and, in addition, serves as an experimental system for LOCEs.

(13) The core is designed for multiple experiments with typical LPWR response. It is designed for a total of approximately 2000 EFPH, which permits the core to meet the operational as well as experimental requirements.

(14) The MTA has a single-loop primary coolant system. Primary coolant system volume ratios are shown in Table 5-I. (See Figures 5-1 and 5-2 for arrangement.)

(15) The MTA is designed to permit adjusting the core power profile through the use of control rods and chemical reactivity shim.

(16) The MTA is designed to permit establishment of reactor system pressure and temperature conditions without using the nuclear heat source. This will permit nonnuclear tests.

(17) Heat from the primary coolant pumps can maintain the primary coolant system at nominal operating temperature.

(18) The MTA is designed in such a manner that primary coolant temperature can be maintained when the reactor is in the power range by withdrawing or inserting reactor control rods or by chemical shimming over a long time period.

(19) The MTA is designed to permit establishing and controlling primary coolant pressure by using a pressurizer (surge tank) connected to the primary coolant system. The pressurizer is designed to operate at the saturation temperature

corresponding to the primary coolant pressure and contain a steam phase volume. The pressure is established by electrically heating the water in the pressurizer until a steam phase is established above the water. The pressure is controlled by assuring an adequate water inventory and steam phase volume to compensate for primary coolant contraction and expansion, and by heating and cooling the fluid in the pressurizer to maintain steam phase temperature.

(20) The MTA is designed to permit maintaining, at steady state and normal transient operations, the pressurizer level at values consistent with maintaining primary coolant system pressure without uncovering the electrical heaters.

(21) Capability is provided to establish, monitor, and control primary and secondary coolant water chemistry as indicated in Table 5-II.

(22) The reactor system and primary coolant system are designed in such a manner that the various transients that occur during normal, upset, emergency, and faulted reactor system operations can be tolerated. (See Table 5-III.) The design thus meets the requirement of Criterion 15 in Appendix 1-A.

(23) The MTA is designed using commercially available system components to the maximum extent possible.

(24) The LOFT Integral Test System is designed to permit sampling of fluid systems to assure compliance with chemistry requirements. (See Table 5-II.)

(25) The LOFT Integral Test System is designed to permit establishing core cooling after test termination to preserve the physical state of the core for posttest examination.

(26) The LOFT Integral Test System is designed to permit operating certain typical ESFs (particularly the ECCS) on command or by PPS demand as determined by experimental sequence requirements.

TABLE 5-II

PRIMARY AND SECONDARY SYSTEMS WATER CHEMISTRY

| Item | Description | Primary Coolant | Secondary Coolant | Coolant Makeup | |
|---|---|---|---|---|---|
| | | | | Primary | Secondary |
| 1. | pH at 77°F | 4.2 to 10.5 | 9.5 to 10.5 | 6.0 to 8.0[a] | 6 to 8 |
| 2. | Total dissolved gases<br>Maximum<br>Design operating | <br>150 cc/kg<br>100 cc/kg | [b] | [b] | [b] |
| 3. | Hydrogen | 15 to 60 cc/kg | [b] | [b] | [b] |
| 4. | Oxygen (max) | 0.1 ppm | 0.01 ppm | [b] | 0.1 |
| 5. | Hydrazine | [c] | [c] | [b] | [b] |
| 6. | Conductivity, μmho/cm | [d] | [b] | 2.0[d] | 2.0 |
| 7. | Chlorides (max) | 0.15 ppm | 0.5 ppm | 0.15 ppm | 0.15 ppm |
| 8. | Boron (as boric acid) | 0 to 3000 ppm[e] | [b] | 0 to 3000 ppm | [b] |
| 9. | Fluoride (max) | 0.10 ppm | [b] | 0.10 ppm | 0.10 ppm |
| 10. | Phosphate | [b] | 10-75 ppm | [b] | [b] |
| 11. | Total suspended solids (max) | 1.0 ppm | 50 ppm | 0.5 ppm | 0.5 ppm |
| 12. | pH control agent ($^7LiOH$) | 0.22 to 2.2 ppm lithium-7 | mono-, di- and trisodium phosphate and hydrazine | [b] | [b] |
| 13. | Total dissolved solids | [b] | 500 ppm | [b] | [b] |
| 14. | $Na/PO_4$ (molar) | [b] | 2.6 max | [b] | [b] |

[a] With boric acid present, the values are dependent upon the boric acid and alkali concentration. The values may range from 4.2 (high boric acid concentration) to 10.5 (low boric acid concentration) at 77°F.

[b] Not applicable.

[c] 1 ppm in excess of oxygen concentration when temperature is <250°F.

[d] With boric acid present, the values will vary as with pH; expected range is 1 to 40 μmho/cm at 77°F.

[e] As specified.

TABLE 5-III[3]

SUMMARY OF OPERATING TRANSIENT CONDITIONS

| Item | Conditions | Rate of Value | Maximum No. of Cycles |
|---|---|---|---|
| 1. | Normal operating conditions | | |
| | a. Warmup and cooldown | $100^{\circ}F/hr$ | 1,500 |
| | b. Startup and shutdown | 10%/min from 0 to 100% power | 11,000 |
| | c. Steady state temperature fluctuations | $\pm 3^{\circ}$, 1 cy/min | $10^6$ |
| | d. Steady state pressure fluctuations | ±15 psi, 1 cy/min | $10^6$ |
| | e. Steady state flow fluctuations | ±2.5%, 1 cy/min | $10^6$ |
| | f. Operation with specific equipment out of service as permitted by the LOFT Technical Specifications | [a] | [a] |
| | g. Refueling | Main head removal | 100 |
| | | Closure plate removal | 260 |
| 2. | Upset operating conditions | | |
| | a. LOCEs | Worst case | 26 min, 260 objective |
| | b. Step load changes | 10% power | 1,000 |
| | c. Step load rejection | 100% power | 360 |
| | d. Reactor scram | 100% power | 1,000 |
| | e. Loss of flow with normal pump coastdown | 100% power | 100 |

TABLE 5-III (contd.)

| Item | Conditions | Rate of Value | Maximum No. of Cycles |
|---|---|---|---|
| f. | Loss of site power | 100% power | 360 |
| g. | Excessive rod withdrawal at start-up -- intermediate or full-power operation | [b] | 10 |
| h. | Loss of normal feedwater | [b] | 10 |
| i. | Control rod drop | [b] | 10 |
| j. | Load transients initiated by spurious operation of active components in the heat rejection system (secondary coolant system, including feedwater subcooler cooling water) | [b] | 100 |
| k. | Single error by an operator | [c] | [c] |
| l. | Excessive boron concentration dilution | [b] | 10 |
| m. | Inadvertent moderator cooldown | [b] | 10 |
| n. | Depressurization by spurious operation of an active element; e.g., relief valve, pressurizer spray valve | Worst case applicable | 10 |
| o. | Single failure of a control component | [c] | [c] |
| p. | Single failure in the electrical system | [c] | [c] |

TABLE 5-III (contd.)

| Item | Conditions | Rate of Value | Maximum No. of Cycles |
|---|---|---|---|
| | q. Reactor coolant system leak which would not prevent orderly reactor shutdown and cooldown by the normal operation of one pump (including leaks to secondary system) | <27 gpm[d] | 10 |
| | r. Secondary system leaks but not in excess of capability of makeup pump | <6 gpm[e] | 10 |
| 3. | Emergency operating conditions | | |
| | a. Loss of reactor coolant which would prevent orderly shutdown at the normal makeup system flow rates but which is not in excess of the available capacity of the HPIS to keep the core completely covered | 6- to 54-gpm loss of coolant (fuel clad temperature does not exceed operating temperature) | 1 |
| | b. Minor secondary system pipe break but not in excess of capability of makeup and auxiliary feedwater pumps | 8 to 16 gpm | 1 |
| | c. Loss of single pump flywheel generator | [f] | 1 |
| | d. SSE | 0.35-g horizontal ground acceleration corrected for component location and support[4] | 1 |
| 4. | Faulted operating conditions | | |
| | a. LOCA (including steam generator tube rupture) | Worst possible[g] | 1 |
| | b. Single control rod ejection from reactor core | Ejection from worst anticipated operating position | 1 |

TABLE 5-III (contd.)

| Item | Conditions | Rate of Value | Maximum No. of Cycles |
|---|---|---|---|
| | c. Major secondary system pipe rupture | Worst possible[g] | 1 |
| | d. Single reactor coolant pump shaft seizure | [g] | 1 |
| | e. Combination of conditions associated with coincident occurrences of emergency and faulted conditions if such can be identified to result from a common cause, e.g., LOCA + SSE | [c] | 1 |

[a] Not specified. Each item of equipment out of service and its effects on the system or component of interest is considered on a case-by-case basis.

[b] See Section 15.2 for transient curves.

[c] Not specified but examined on a case-by-case basis.

[d] Based upon additional control system makeup flow with one pump inoperable.

[e] Based on makeup capability with either the auxiliary or makeup pump inoperable.

[f] See Section 15.3.5.

[g] See Section 15.3.

(27) The MTA is designed to permit controlling initial or normal operational parameters which affect the thermal response of the core cladding hot spot.

(28) The LOFT Integral Test System is designed to permit collection of pressure, temperature, density and/or level, flow, strain, displacement, acceleration, and other data necessary to define events and reactions occurring within the reactor during LOCEs and to evaluate the capabilities of the ECCS.

(29) The entire MTA and its components are designed and arranged to be externally self-draining and resistant to all blowdown condensate and decontamination fluids and chemicals encountered in blowdowns to the containment vessel to the extent practical.

(30) For nonnuclear experiments, the MTA is designed to permit blowdown with either an actual core or a core simulator in place inside the reactor vessel.

(31) The MTA is designed to permit collection of coolant samples and experimental data to determine the fission product concentration in various parts of the blowdown, blowdown suppression, and primary coolant systems as a function of time.

(32) The MTA is designed to withstand appropriate seismic disturbances. A dynamic analysis of the response of the MTA to such disturbances has been performed which indicates that the plant can be brought to a safe shutdown through a "safe shutdown earthquake" (SSE). This design basis meets the requirements of General Design Criterion 2 for the MTA (see Appendix 1-A).

### 5.1.3 Codes and Standards

All major MTA fluid system components are designed, fabricated, inspected, and tested in accordance with the applicable documents listed in Table 5-IV. The design thus satisfies General Design Criteria 1 and 30 (see Appendix 1-A).

TABLE 5-IV

CODES AND CLASSIFICATIONS OF MAJOR MTA FLUID SYSTEM COMPONENTS

| Item | Component | Code | Classification |
|---|---|---|---|
| 1. | Shield tank | ASME, Section III (1968 ed.) | Class B |
| 2. | Reactor vessel | ASME, Section III (1965 ed.) | Class A |
| 3. | Steam generator | ASME, Section III[b] | Class 1 |
| 4. | Pressurizer | ASME, Section VIII (1962 ed.)<br>ASME, Section III[b] | Class 1 |
| 5. | Primary coolant pump | ASME, Section III[b] | Class 1 |
| 6. | Piping | ASME, Section III[a] | Classes 1, 2, and 3 |
| 7. | Venturi | ASME, Section III[a] | Class 1 |
| 8. | Valves | ASME, Section III[a] | Class 1 |

[a] 1971 edition.

[b] 1971 edition of Section III of the ASME Code used as a guide for qualification.

In addition, the following RDT standards have been incorporated into the specifications of the MTA equipment wherever appropriate:

(1) A 1-1T, "Coolant Composition in Pressurized-Water Reactors"

(2) C 15-4T, "Self-Powered Cobalt-Emitter Neutron Detector"

(3) C 16-1T, "Supplementary Criteria and Requirements for RDT Reactor Plant Protection Systems"

(4) E 1-6T, "Automatic Spring-Loaded Safety Valves"

(5) E 1-9T, "Stainless Steel Gate Valves, Manual and Power Operated"

(6) E 1-12T, "Stainless Steel Check Valves"

(7) E 1-21T, "Stainless Steel Globe and Angle Valves, Manual and Power Operated"

(8) E 1-25T, "Instrument Valves"

(9) E 3-3T, "Vertical, Shaft-Sealed, Motor-Driven, Single-Stage, Centrifugal Pump"

(10) E 4-1T, "Steam Generator for Pressurized Water Reactors"

(11) E 5-1T, "Pressurizer for Pressurized Water Reactors"

(12) E 5-2T, "Electric Heater and Connector Assembly for Pressurizer for Pressurized Water Reactors"

(13) E 6-9T, "Core Support Structure for Pressurized Water Reactors (Fabrication Only)"

(14) E 11-1T, "Ion Exchanger, Non-Regenerative Type"

(15) E 13-15T, "Fuel Assemblies for Pressurized Water Reactors"

(16) E 15-2T, "Requirements for Nuclear Components (Supplement to the ASME Boiler and Pressure Vessel Code, Section III)"

(17) F 2-2T, "Quality Assurance Program Requirements"

(18) F 3-2T, "Calibration System Requirements"

(19) F 5-1T, "Cleaning and Cleanliness Requirements for Nuclear Components"

(20) F 7-3T, "Requirements for Identification Marking of Reactor Plant Components and Piping"

(21) M 12-1T, "Test Requirements for Thermal Insulating Materials for Use on Austenitic Stainless Steels"

(22) M 12-2T, "Calcium Silicate Block and Pipe Thermal Insulation (ASTM C533 with Additional Requirements)"

(23) M 12-4T, "Reflective Insulation".

## 5.2 System Design and Operation

### 5.2.1 General Description of Major MTA Components

The MTA is designed to meet the overall performance objectives described in Section 5.1 and the appropriate general design criteria as presented in Appendix 1-A. It was assembled at NRTS-TAN as a mobile unit in the Building TAN-607 high bay shop, is transportable on the four-rail railroad system to the LOFT facility site, provides compatible interfaces with the LOFT facility, and is transportable to the Building TAN-607 hot shop after nuclear operation for maintenance or repair.

The MTA (as shown in Figures 5-1, 5-2, and 5-3) contains the following major components and portions of the auxiliary system, all of which are described herein:

(1) Structural support
  (a) Railroad dolly
  (b) Dolly support frame
(2) Radiation shield tank
(3) Heat removal systems
  (a) Primary coolant system
    (i) Reactor vessel
    (ii) Steam generator
    (iii) Pressurizer
    (iv) Primary coolant pumps
  (b) Purification system
  (c) ECCS
(4) Blowdown system
(5) Auxiliary systems
  (a) Primary coolant purification system
  (b) Primary coolant addition and control system
  (c) Primary component cooling system
  (d) Primary coolant sampling system
(6) Instrumentation and controls.

### 5.2.2 Structure Support[5]

The dolly, shield tank, and component support system assembly is the structural assembly which supports the reactor system; primary coolant system; blowdown system; reactor radiation shield; and instrumentation, electrical, fluid, and other associated systems of the MTA.

The structure support is designed to facilitate the performance objectives in Section 5.1.1 and to meet the design criteria formulated to meet those objectives (see Section 5.1.2).

#### 5.2.2.1 Railroad Dolly

The dolly is a special railroad car which is approximately twice as wide as a standard railroad car. The

undercarriage is designed to operate on a four-rail track arranged on standard-gauge spacing. The dolly has an integral support frame on which the following are mounted: (a) the shield tank, (b) service piping, (c) the electrical and instrumentation equipment, and (d) the auxiliary support framing.

A standard railroad coupler is mounted on each end of the dolly to connect the dolly to the existing TAN locomotive. The dolly is restrained during tests in the containment vessel test chamber by anchors in the chamber floor that prevent excessive vertical displacement or lateral movement normal to the track system. Lugs on the sides of the dolly slide into these anchors to effect the connection. The dolly is restrained from longitudinal movement along the track by structural beams anchored into the test chamber floor and bolted to the railroad dolly structure.

Standard railroad car components and construction methods were used where possible. To avoid damage to both the car and truck during transit, standard railroad springs are used. Brakes are not used on the dolly to eliminate the possibility of having locked wheels during transit. Braking during transit will be accomplished by the locomotive. The structure is fabricated of A-516 Grade 70 steel. The dolly is coated with Dimetcote No. 6 and Amercoat 66 to protect it from the environmental conditions anticipated in the LOFT containment during LOCEs which discharge blowdown effluents to the containment vessel.

5.2.2.2 Support Frame

The support frame is composed of the following support structures:

(1) Structural frames integral with the dolly which support the steam generator, primary coolant pumps,

pressurizer, blowdown system, piping and valves, instruments and cables, and electrical cable system

(2) A radiation shield tank designed as an integral part of the frame which has adequate structural strength to support the reactor vessel (see Figure 5-4).

The support frame and tank assembly can withstand the dynamic loads expected during a LOCE or LOCA coupled with a SSE. The analysis method and basis are presented in References 4 and 6.

The primary coolant pumps and the steam generator are each separately mounted on low friction bases which permits movement of these components during thermal changes in the primary coolant piping but are restrained against rapid movement by snubbers.

To prevent structural degradation of the carbon steel structure due to corrosion caused by decontamination fluid, the support frame assembly is coated with Dimetcote No. 6 and Amercoat 66.

### 5.2.3 Radiation Shield Tank

The dolly-mounted radiation shield tank provides a partial radiation shield around the reactor system. The shield tank is a right circular annular cylinder mounted on the railroad dolly. The shield tank forms an enclosure around the reactor vessel to act as a container for radiation shielding materials. The shielding materials are lead, steel, and water. The arrangement provides the materials required for attenuation of neutrons and gamma radiation to acceptable levels for limited access to some areas outside the containment vessel during full-power operation and for early access to the containment vessel test chamber following reactor shutdown[7].

#### 5.2.3.1 Radiation Limits

To provide the required radiation protection, the shield tank design criteria require that radiation emanating from the reactor vessel be attenuated to meet the radiation limits established in Section 13.2.2. The calculated

radiation levels resulting from reactor operations and the conduct of experiments is given in Section 13.2.4.

5.2.3.2 Radiation Shielding

During reactor operation the gamma radiation levels inside the containment vessel will be in excess of allowable tolerances for personnel radiation dose rates. Outside areas that will be occupied often during reactor operation will be provided with additional biological shielding to reduce radiation exposure of the operating personnel. Unshielded areas in the high radiation field will be exclusion areas to which access will be controlled.

During normal shutdown, the reactor vessel shield tank will provide the primary shielding against gamma radiation originating in the core fission products and the activation gammas originating in the core thermal shield, reactor vessel, and the shield materials. Further discussion of the radiation shielding is presented in Sections 13.2.2 and 13.2.4.

## 5.2.4 Heat Removal Systems

### 5.2.4.1 Primary Coolant System[3,8,9]

#### 5.2.4.1.1 General Description

The primary coolant system provides the media for transferring heat from the reactor core to the secondary coolant. The primary coolant system consists of the reactor vessel, the plenum side of the steam generator, the primary coolant pumps, the pressurizer, the flow-measuring element, and the interconnecting piping. (See the schematic diagram of the system in Figure 5-5 and the general layout in Figures 5-1, 5-2, and 5-3.)

The primary coolant system provides a boundary for containing the coolant under operating

temperature and pressure conditions. The primary coolant system configuration has been selected to be as representative of LPWR systems as possible. The cold and hot leg reactor vessel nozzles are in the same horizontal plane and located above the core. The steam generator is located above the main loop piping. The discharge nozzles of the primary coolant pumps are in the same horizontal plane as the reactor vessel nozzles[10].

The primary coolant system functional description and related system interactions are described in the following paragraphs and visually depicted in the schematic diagram in Figure 5-5. For convenience the functions of the components are discussed in the order in which they are encountered in tracing the system in the normal flow direction, starting at the reactor vessel inlet.

The coolant flow path is typical of LPWRs. From the reactor vessel inlet, the coolant passes down through an annular "downcomer" inside the reactor vessel into a "reactor vessel lower plenum". By means of a multiple orifice plate arrangement, the flow upward is restricted sufficiently to assure proper flow distribution through the core and the core bypass for cooling of the core, structural support members, and other components. In passing through the core, the coolant absorbs thermal energy being produced by nuclear fission in the fuel and by the absorption of neutron and gamma emission in the structural materials.

The heated coolant leaves the core region and flows into the reactor vessel upper plenum and through the outlet nozzle. The flow passes through the hot leg piping and flow venturi to the steam generator inlet plenum. An orifice is required at both the steam generator inlet and outlet to provide a typical pressure drop across the steam generator, and provisions to permit their use have been added in the steam generator nozzles. As the coolant passes through the steam generator tubes from the inlet plenum to the outlet plenum, it transfers thermal energy to the secondary coolant. The primary coolant then flows to the pump suctions at a lower temperature. In the pumps, the pressure head lost by the coolant because of the fluid flow resistance through the coolant circuit is restored. The fluid from the pump discharge returns to its starting point, the reactor vessel inlet, through the cold leg piping.

Primary coolant temperature is a function of the heat input from the reactor core, dissipation to the secondary coolant system, and various heat losses. This temperature is controlled by varying control rod position. The power level in the reactor core is controlled by steam demand of the secondary coolant system. The two functions must be coordinated during nuclear operation to ensure that power level and temperature are maintained within safe operating limits and to permit operation at the desired power level. When reactor power is increased by increasing steam demand, the primary coolant temperature will be maintained at the programmed value by varying control rod position. An increase in average coolant

temperature would be obtained by a positive reactivity addition by means of control rod withdrawal. The average coolant temperature will then increase and stabilize at a new level compatible with the reactivity increase. When long-term or large variations in reactivity are required (owing to core "burnup" or xenon buildup), the boron concentration of the primary coolant can be adjusted by injecting a limited quantity of demineralized water from the batch tank. Controls for regulating steam demand and control rod position, and for preparing and injecting fluid for boric acid concentration control, are located in the main control room.

Primary coolant differential temperature across the core is regulated by the power level of the core and flow in the primary coolant system. Reactor hot leg, cold leg, and average temperatures are indicated in the main control room to provide the operational information for controlling the plant temperatures.

Primary coolant inventory is maintained by charging to the primary coolant system with the addition and control system and by bleeding off coolant from the primary coolant system through the purification system or from the primary coolant loop drains. The operation of the charging pump and the flow from the bleed valves are remote-manually initiated from the reactor control console. Pressurizer level, indicated at the control console, will be used to determine the operational mode required. Both modes may be initiated simultaneously if the pressurizer level is to be held constant while additions of greater or

lesser boron concentrations are made in order to vary primary coolant loop boron concentration. Either charging pump may be used, and owing to the speed reducer coupled with each pump, a variable delivery of makeup coolant from 2.7 to 27 gpm is possible. The purification system drain valve, a specially designed flow control valve for high-pressure-drop service, allows bleedoff at flow rates up to 30 gpm at the normal operating pressure of the primary coolant system. The normal addition point is into the purification system at a location upstream of the regenerative heat exchanger (RHX). Two other separate ECC injection points can be used also to provide backup addition capability. (See Section 11.2 for further details of the addition and control system.) This design meets the requirements of Criterion 33 (see Appendix 1-A).

Besides the normal bleed path, two backup paths are provided directly from the primary coolant system (CV-P139-31-1, -31-2, -25, and -26). These two paths provide backup letdown from the purification system, each with a variable flow rate of up to 30 gpm through the special drag valves CV-P139-31-2 and -26. The details of these special Self drag valves are shown in Figure 5-6. In addition, they provide redundant decay heat removal paths for the PPS. This design meets the requirements of Criterion 34 (see Appendix 1-A).

The primary coolant system is designed to minimize leakage. A detailed evaluation has been performed which included every component in the primary coolant system boundary

to assure that (a) the sum of all leakage does not exceed makeup capacity and that (b) personnel exposure from leakage of contaminated water will be within allowable limits. Seals that are employed at all major bolted flanges will be monitored for leakage before startup to provide additional protection against leakage during power operation. The design of the reactor coolant pressure boundary meets the requirements of Criteria 14 and 30 in Appendix 1-A.

5.2.4.1.2 Reactor Vessel

The reactor vessel is typical of most LPWR reactor vessels in that it consists of a right vertical cylinder with inlet and outlet nozzles entering on the same plane above the core. The main vessel closure consists of a flanged and bolted top head which can be removed for access to the core region. (See Figure 5-7 and Section 4.0 for details of the reactor vessel configuration.)

The reactor vessel is located in the center of the railroad dolly and is supported by the shield tank structure as described in Section 5.2.3.

The experimental objectives of the LOFT Integral Test Program require flexibility in adapting to alternate core configurations and place severe hydraulic and dimensional requirements on the reactor vessel configuration[11]. In order to accommodate these requirements, the "basic" reactor vessel inside diameter and its vertical height are made larger than necessary for the initial test core requirements. The reactor vessel provides

(a) the capability to accept cores larger in diameter and/or length than those presently contemplated and (b) flexibility in downcomer annulus width. The vessel has been modified to accept solid fillers which are utilized to provide proper volumes and hydraulic responses satisfying program objectives.

The vessel has been designed, fabricated, and tested in accordance with Section III of the ASME Code (1965 edition) and has been "N"-stamped as a Class A vessel. Appendix IX of the 1968 edition of Section III of the ASME Code, dealing with QA, was used in vessel fabrication as a supplemental requirement.

The basic design features of the reactor vessel are given in Table 5-V.

TABLE 5-V

REACTOR VESSEL DESIGN PARAMETERS

| Item | Parameter | Value |
|---|---|---|
| 1. | Design pressure | 2500 psia |
| 2. | Design temperature | 650°F |
| 3. | Normal operating pressure | 2250 psig |
| 4. | Inlet temperature | 571.5°F |
| 5. | Outlet temperature (max) | 610°F |
| 6. | Coolant flow (max) | $4.67 \times 10^6$ lb/hr |
| 7. | Weights | |
| | a. Vessel | 106,000 lb |
| | b. Internals and fillers | 140,000 lb |
| | c. Control rod drives | 2,800 lb |
| | d. Total (dry) | 248,800 lb |
| | e. Total (flooded) | 255,100 lb |

5.2.4.1.3 Steam Generator[12]

The steam generator is a vertical shell-and-tube, U-tube, and single-tube-sheet-type, boiling-water heat exchanger. Design parameters are presented in Table 5-VI. The generator

TABLE 5-VI

STEAM GENERATOR DESIGN PARAMETERS

| Item | Parameter | Value |
|---|---|---|
| 1. | Primary side design | |
| | a. Design pressure | 2500 psia |
| | b. Design temperature | 650°F |
| | c. Normal operating pressure | 2250 psig |
| | d. Inlet temperature | 610°F |
| | e. Outlet temperature | 571.5°F |
| | f. Coolant flow rate | $4.67 \times 10^6$ lb/hr |
| 2. | Secondary side design | |
| | a. Design pressure | 1100 psia |
| | b. Design temperature | 600°F |
| | c. Normal steam pressure | 400 to 1003 psig |
| | d. Normal steam temperature | 444 to 545°F |
| | e. Normal steamflow | $2.72 \times 10^5$ lb/hr |
| | f. Normal feedwater temperature | 407°F |
| 3. | Weights | |
| | a. Dry | 64,000 lb |
| | b. Flooded | 79,000 lb |

is mounted on the centerline of the MTA dolly by means of a base mount. The elevation of the mount is designed so that the nozzles are at the same elevation as the reactor vessel nozzles. This mounting places the top of the steam generator about 6 ft above the top of the containment door. The initial installation of the steam generator will take place inside the containment test

chamber. For subsequent requirements to move the MTA through the containment door, the steam dome will be removed in accordance with approved procedures[13]. The likelihood of such MTA movement is considered remote.

5.2.4.1.4 Pressurizer[14]

The primary coolant system operates at a nearly constant pressure differential above the saturation pressure of the primary coolant. System pressure is established and controlled in the pressurizer, a vertical cylindrical-type pressure vessel (see Figure 5-8)[15] which contains both steam and liquid phases. Coolant expansion and contraction resulting from temperature changes of the primary coolant causes flow in and out of the pressurizer through the surge line connecting the bottom head of the pressurizer and the hot leg of the primary coolant system. Design parameters are listed in Table 5-VII.

To maintain system pressure, coolant surges are damped by the condensation and generation of steam in the pressurizer through use of subcooled spray and direct-immersion electric heaters. The heaters are installed radially in a horizontal position through the side wall in the lower portion of the pressurizer. The subcooled spray is directed into the steam volume from a penetration through the top head of the pressurizer. The spray is supplied from the cold leg of the primary coolant system, downstream from the primary coolant pumps, so that flow through the spray line is established by the differential head developed by the pumps. Both the heaters and the subcooled spray are controlled (cycled) as a function of the pressurizer pressure.

TABLE 5-VII

SPECIFIC FEATURES AND PERFORMANCE DATA OF PRESSURIZER SYSTEM

| Item | Characteristic | Value |
|---|---|---|
| 1. | System pressure | |
| | a. Design | 2500 psia |
| | b. Operating | 2250 psig |
| 2. | System temperature | |
| | a. Design | 683°F |
| | b. Operating | 653°F |
| 3. | Pressurizer vessel | |
| | a. Volume | |
| | (1) Total free | 34 $ft^3$ |
| | (2) Operating | |
| | (a) Steam | 11.5 $ft^3$ |
| | (b) Liquid | 22.5 $ft^3$ |
| | b. Dimensions | |
| | (1) Inside diameter | 2 ft 9 in. |
| | (2) Surge nozzle to spray nozzle | 9 ft 8-13/16 in. |
| | c. Materials | |
| | (1) Pressure plate | SA-212B FBX |
| | (2) Cladding | SFA 5.9 Class ER308L |
| | d. Heaters | |
| | (1) Number | 12 |
| | (2) Capacity (total) | 48 kW |
| 4. | Safety valve size | |
| | a. Inlet | 1-1/2 in. |
| | b. Outlet | 2 in. |

A small continuous spray will be maintained through this line to provide uniform coolant chemistry and temperatures in the pressurizer, surge line, and spray line. An auxiliary spray flow source from the purification system pump will provide spray capabilities for cooling

down the pressurizer if the primary coolant pumps have been stopped during plant shutdown.

Primary coolant degassification is provided by operation of the pressurizer spray and electric heaters. Gases collected in the pressurizer steam volume are vented remote-manually to the blowdown suppression tank.

Primary coolant system high-pressure conditions that result from transients that exceed the capability of the subcooled spray are controlled by a power-operated relief valve. This valve (CV-P139-5-4) is a 1-in. air-operated valve with a design flow rate of 7200 lb/hr. If the transient exceeds the capability of CV-P139-5-4, the plant is protected from overpressure by a series of relief valves designed in accordance with Article NB-7000 of Section III of the ASME Code. Verification that these relief valves prevent the system pressure from exceeding 110% of design pressure is contained in Reference 16.

The pressure relief devices consist of two spring-loaded safety valves located on a header which is connected to the steam space at the top of the pressurizer. The discharge from each pressure relief device is piped to the suppression tank located within the containment vessel, which is in accordance with paragraph NB-7156 of Section III of the ASME Code. Overpressure protection provides assurance that the design conditions are not exceeded as required by Criterion 15 in Appendix 1-A.

The capacity of each primary coolant system pressure relief device is 22,618 lb/hr. The capacities are based on transient conditions which cause the largest power imbalance between the primary and secondary coolant systems. The sizing analysis considered the reactor shutdown system, piping pressure drops, and transient conditions.

Simulations of transient conditions for loss of load, inadvertent rod withdrawal from low power, and loss of steam generator feedwater have been made on a hybrid computer simulation of the LOFT primary and secondary coolant systems. Pressurizer pressure, surge line pressure drops, and primary piping pressure drops were used in determining that a maximum pressure of 2605 psig resulted in the primary coolant system during the worst transient condition. This maximum pressure falls well below the 2750-psia limit defined by Section III of the ASME Code. From the results of the analysis described in Reference 16, it was concluded that the overpressure protection afforded by the LOFT primary pressure relief devices is more than sufficient to satisfy the requirements of Section III of the ASME Code.

5.2.4.1.5 Primary Coolant Pumps[17,18]

The primary coolant pumps are canned-rotor, zero-leakage-type units qualified for LOFT use (see Figure 5-9). The requirement for pump coastdown to simulate the coastdown performance of LPWR pumps is provided by electrical means. Variable-speed operation, necessary for flexibility in selecting test conditions, is provided by operating a generator at variable speed through a fluid coupling

from the drive motor. An example of extended coastdown which is within the LOFT pump coastdown capability is shown in Figure 5-10. Variable-speed pump operation is achieved by varying the speed, and thereby frequency, of the two electric generators that supply the two pump motors. The variable-frequency electric generators are equipped with flywheels that may be replaced with wheels of different inertia if need arises in the experimental program. The field of the variable-frequency generator is supplied from the vital bus in case of loss of offsite power.

The pump-motor rotors are completely surrounded by water (primary coolant) at primary system pressure. An internal thermal barrier separates the hot water in the pump end from cool water in the motor. The water in the motor is circulated through the motor bearings and a set of cooling coils by an internal pumping ring. The coils are cooled by a water jacket through which a flow of 50 gpm of water at about 80°F is maintained. The stator windings and rotor are cooled by this internal high-pressure circulation system, which also provides the lubrication for two Graphitar sleeve bearings and a double-action, pivoting-shoe, Kingsbury-type Graphitar thrust bearing.

An auxiliary bearing-coolant-water injection system is provided to supply borated water to the pump internals in order to assure continuous bearing lubrication during the coastdown period following the start of a LOCE.

The pump motors are connected to the separate MG power supplies by separate cabling. In the event of a mechanical or electrical failure of one pump, the second unit will run out on its performance curve sufficiently to provide approximately 50% of the normal flow through the core, even though some coolant will recirculate through the stopped pump.

Table 5-VIII provides design data on the primary coolant pumps.

TABLE 5-VIII

LOFT PRIMARY COOLANT PUMP DESIGN PARAMETERS

| Item | Parameter | Value |
|---|---|---|
| 1. | Number of pumps | 2 |
| 2. | Capacity (each) | 5000 gpm |
| 3. | Head | 325 ft |
| 4. | Suction pressure, design | 2500 psia |
| 5. | Suction temperature, design | 650°F |
| 6. | Revolutions per minute | Variable up to 3550 |
| 7. | Volts/Hz/phase | 440/variable/3 |
| 8. | Amperes (60°F and 550°F) | 680/485 |
| 9. | Horsepower (60°F and 550°F) | 500/300 |
| 10. | Cooling water required | 50 gpm |
| 11. | Cooling water temperature | 80°F |
| 12. | Materials | |
| | a. Case | Type 304 ss |
| | b. Rotor shaft | Type 304/410 ss |
| | c. Stator and rotor jackets (cans) | Inconel |
| | d. Bearings | Stoody (Stellite)/ Graphitar |
| | e. Cooling coils | Type 321 ss |
| | f. Stator shell | Type 304 ss |
| | g. Remainder | Types 18-8 ss, 304 ss, 316 ss, 410 ss, and Stellite |

5.2.4.1.6 Primary Coolant System Water Chemistry

The primary coolant water chemistry will be controlled to meet the quality standards of RDT Standard A 1-1T. The LOFT water chemistry specifications which comply with this standard are identified in Table 5-II. All MTA equipment is designed to be compatible with the defined water chemistry. For details of the water systems, see Section 11.10.2.

5.2.4.2 Purification System

The purification system maintains primary system coolant purity and chemistry within the specified limits. The purification system nonregenerative heat exchanger (NRHX) also is used for cooldown and residual heat removal. A further description of this system is provided in Section 5.2.6.1.

5.2.4.3 Emergency Core Cooling System[19]

The ECCS is an ESF of the LOFT Integral Test System. The ECCS provides the source and the means of injecting ECC during and subsequent to a LOCE or LOCA (i.e., blowdown). It provides core cooling capability for use in the event of an accident. In addition, the system can be operated at reduced capacity during a LOCE to simulate the performance of various LPWR ECCS. The capability to go from reduced capacity to full capacity in a short time exists to allow for any unexpected occurrences during a LOCE. The system consists of the HPIS (which uses the primary system charging pumps), the accumulator system, and the LPIS. The accumulator system and the LPIS satisfy the core cooling requirements following large primary system breaks. The HPIS is included to prevent core damage from small piping ruptures. Provisions exist to permit primary coolant recirculation for fission product cleanup and/or system cooldown from the blowdown suppression tank

or the blowdown hot leg through the LPIS pumps, low-pressure heat exchangers, ion-exchange filters, and back into the reactor vessel or the suppression tank. The LPIS can also provide an alternate source of long-term core cooling by the recirculation of water from the containment sump if desired. For a more detailed description, refer to Section 7.2.

### 5.2.5 Blowdown System[20]

The LOFT blowdown loop provides a system integrated with the primary coolant system that permits simulation of the significant thermal and hydraulic processes associated with a LOCA-ECC injection occurring in a multiloop power reactor. Measurements of the pertinent parameters associated with the thermal and hydraulic processes are necessary in order to evaluate the ability of analytical methods to predict the sequence of events. In order to achieve these purposes, the basic functions of the blowdown system are as follows:

(1) To provide a means of reliably and repeatedly simulating various sizes and types of pipe breaks, including the complete severing of a primary coolant pipe to simulate a LOCA condition in an LPWR

(2) To provide the means of simulating two- and four-coolant-loop LPWR LOCAs (including simulation of major primary loop components) with provision for flexibility in establishing the desired effective break size, flow distribution, and location

(3) To provide the means of initiating a LOCE to gather test information on the reactor nuclear, thermal, and hydraulic response; the thermal and hydraulic behavior of the primary coolant fluid; and the primary system equipment response during blowdown and ECC injection

(4) To provide the capability and equipment necessary to:
   (a) Quench and contain the blowdown effluent (with associated fission products if any) expelled during a LOCE

(b) Filter, purify, and reclaim the blowdown effluent and ECC for reuse

(c) Provide a reservoir of borated coolant for ECC recirculation during post-LOCE residual heat removal and to maintain a closed fluid system to facilitate LOCE plant recovery

(d) Provide a reservoir for primary coolant during plant heatup and cooldown

(e) Monitor distribution of fission products during and after blowdown.

The functions in (4) above are performed by the blowdown suppression portion of the blowdown system, located off the MTA. These functions are described in Section 11.11.

To achieve the required system functions, meet the specific design requirements, and comply with the design choices, the system is designed as shown schematically in Figures 5-11a through 5-11d.

The blowdown loop is connected to the reactor vessel through 14-in. nozzles, designated "C" and "D". Nozzle C is the inlet which enters into the inlet flow distributor annulus (cold leg). Nozzle D, a reactor vessel outlet (hot leg), connects to and takes effluent from the upper plenum. Mechanical connections and the blowdown loop diagram are shown in Figures 5-3 and 5-11b. Piping elevations are shown in Figure 5-1.

The 14-in. pipe leaving the reactor vessel must be reduced to (a) 5-in. XX (double-extra-strong) pipe to simulate a 4- x 4-loop LPWR or (b) 8-in. Schedule 160 pipe to simulate a 2- x 4-loop LPWR. The 14-in. pipe is considered to act as part of the respective connected vessel plenum during a LOCE. Prior to the reduction to 5-in. XX (or 8-in. Schedule 160) pipe, experimental flow devices and connections for the reflood assist bypass, LPIS suction, purification system suction, and future pressurizer connection are provided. The reduction is designed to provide an abrupt reduction similar to a reactor vessel nozzle.

A length of smaller-diameter pipe corresponding to the desired hot leg L/D is installed prior to the mechanical connection. This length is actually contained in the special reducing fitting. The mechanical connection is located just beyond the shield tank to permit installation of the pump simulator loop seal. It should be noted that the dimensions on hot and cold leg must be the same to permit interchanging spool pieces to simulate hot and cold leg breaks.

The steam generator in the broken loop is simulated by volume and flow resistances. The volume and flow resistances (orifices and expansions) are sized to be representative of the parameters corresponding to one of the four steam generators in a four-loop LPWR. The elevation of the steam generator simulator is such that the spillover height corresponds to the LOFT steam generator tube bundle height. An actual steam generator may be utilized later if required.

The pump in the broken loop is also simulated by volume and flow resistances; however, an actual pump may be utilized later if required. The volume and flow resistances (orifice plates) of the simulator are sized to be representative of the parameters corresponding to one of the four pumps in a four-loop LPWR. The depth of the pump simulator loop is set to match with the primary loop.

The ruptured-loop mechanical connection provides a transition from 5-in. XX to 8-in. Schedule 160 pipe. This constitutes the break plane in that loop. The 8-in. Schedule 160 pipe size is large enough to prevent downstream choking and may be usable later in the 2- x 4-loop LPWR simulation.

At the outlet of the spool pieces, another mechanical connection provides a transition to 12-in. motor-operated gate valves. These valves are sized to prevent choking for the 2- x 4-loop LPWR. They, together with the 12-in. quick-opening blowdown valves, provide double valve isolation capability. These gate valves are designed to operate with minimal pressure drop across the disc; thus, a small bypass valve is required for pressure equalization.

Downstream of the isolation valves are the quick-opening valves, which are the LOCE initiation device. The ports of these valves are welded to the outlet ports of the isolation valves. The size of these valves is sufficient to prevent choking in the valve for a 2- x 4-loop simulation. It should be noted that the size requirement to prevent choking increases in the downstream direction.

A crossover connection between blowdown legs may be added for certain experiments to simulate a "communicative" break, in which crossflow can occur. Valves would be provided in this line to prevent core bypass during power operation. The crossover line will not be installed for the initial series of LOFT tests.

The mechanical connections at either end of the spool pieces are designed to accept ofifices so as to simulate less-than-full-pipe break area. The orifices would be placed at the break plane.

Small (1-in.) warmup bypass lines are provided to permit a small flow out of the reactor vessel to maintain the blowdown legs near primary coolant temperature.

The blowdown valve outlet is connected to the suppression header via expansion joints. The 42-in. expansion header is designed for the 2- x 4-loop blowdown. Alternately, the blowdown may be conducted directly to the containment vessel, depending on test objectives.

The blowdown valves are supported on a sliding base. The line with the straight spool piece (hot or cold leg depending on the break to be simulated) is free to slide; thus thermal expansion will generate only the minimal loads to compress the downstream expansion joint. Blowdown loads will thus be transmitted down the pipe and taken in the reactor vessel nozzles. The 45° bends on connecting to the vessel nozzles are Inconel because of its increased strength. There is sufficient flexibility in the simulator section for thermal expansion.

Most of the blowdown loads will thus be absorbed at the blowdown valve. The simulator sections are supported by hangers permitting free axial movement.

A 10-in. "reflood assist bypass" connects the 14-in. portion of the blowdown hot leg to the 14-in. portion of the blowdown cold leg through parallel 10-in. gate valves. This bypass is an ESF. The safety function of the bypass is described in Section 7.3.

### 5.2.6 Auxiliary Systems[3]

#### 5.2.6.1 Primary Coolant Purification System

During periods of normal operation, coolant chemistry in the primary coolant system is maintained by the purification system. It directs coolant from the main loop through a RHX and a NRHX, an ion exchanger, and a filter and then returns it to the main loop. The purification system also provides a heat sink capability for removal of decay heat and residual heat from the primary coolant system. A connection is provided from the purification system to the pressurizer spray line to provide pressure reduction capability during periods in which the primary coolant pumps are not operating. The purification system is remotely controlled from the main control room. The purification system is described in detail in Section 11.1.

#### 5.2.6.2 Primary Coolant Addition and Control System

Primary coolant inventory and boron concentration are maintained by the addition and control system. During normal operation the redundant charging pumps are manually controlled to maintain the desired liquid level in the pressurizer. During a LOCE or LOCA these pumps serve for high-pressure safety injection. The makeup coolant enters the primary coolant system via the purification system. An auxiliary means of charging the primary coolant system during purification system isolation is provided by using the ECC connections.

Pressurizer liquid-level indication and makeup pump controls are provided in the main control room for remote operation. A detailed description of the addition and control system is presented in Section 11.2.

5.2.6.3 Primary Component Cooling System

Component cooling water is supplied to the primary coolant pumps, control rod drives, sampler cooler, and NRHX. Flow through the pump, control rod drives, and sample cooler will be adjusted during preoperational testing. Flow through the NRHX may be adjusted remotely or automatically to control heat removal. The primary component cooling system is discussed in detail in Section 11.3.

5.2.6.4 Primary Coolant Sampling System

Sampling capabilities are provided in the pressurizer liquid space, in the pressurizer relief line, in the purification system upstream and downstream of the purification ion exchanger, and in the primary system directly. The sample flow alignment is controlled by remotely operated valves and directed to a manually operated sampling station outside the containment. The samples will provide information on primary coolant chemistry and purification system performance. The sampling system is described in detail in Section 11.1.

5.2.7 Instrumentation and Controls

The I&C systems provide MTA operation similar to LPWR operation and, in addition, provide the necessary test data to evaluate the test objectives as described in Section 5.1.1. The details of the I&C systems are covered in Section 9.0.

## 5.3 System Design Evaluation

The MTA design meets the performance objectives outlined in 5.1.1 and the specific design criteria as described in 5.1.2. The design has been completed in accordance with the requirements specified in the referenced SDDs. These requirements included (a) design and fabri-

cation in accordance with the requirements of the latest applicable codes and standards, and (b) use of high-quality material and fabrication techniques while following a rigid QA program. The unique feature of the MTA and its fluid systems is that they have been designed to operate reliably for repeated LOCEs while producing stress levels within the allowables for upset conditions set forth in Section III of the ASME Code (1971 edition). This capability alone demonstrates the extensive design study and analysis applied.

The MTA has, in addition to being designed and fabricated as described in the previous paragraph, incorporated features to assure protection in the unlikely event of an accident or malfunction. A PPS as discussed in Section 9.0; ESFs as discussed in Section 7.0; and a detailed test and inspection program, including nonnuclear blowdowns designed to be at least as demanding on the structural characteristics of the MTA as the most severe nuclear LOCEs performed on LOFT, assure a high level of safety in the design.

Further discussion of the specific application of the three-levels-of-safety approach to the LOFT MTA is provided in Section 5.5.

## 5.4 Tests, Inspections, Maintenance, and Requalification

The testing, inspection, maintenance, and requalification programs on the LOFT MTA are designed to:

(1) Assure that the MTA design objectives are met

(2) Provide visible evidence that integrity and reliability are maintained through application of continuing inspection requirements

(3) Assure that the initial high-quality design objectives are upheld by maintenance in accordance with approved procedures and utilizing replacement parts of at least the quality of those initially designed

(4) Provide a rigorous method of assuring safe conduct of each LOCE by detailed requalification efforts prior to performance of the next experiment.

The overall program applied to assure personnel and public safety, as well as to provide for maximum plant availability, may be divided as follows: (a) initial integrity verification, (b) maintenance, and (c) requalification.

More detailed aspects of these parts of the operational QA program are provided in the following subsections.

### 5.4.1 Integrity Verification

The purpose of integrity verification is to provide assurance that the primary coolant system and its auxiliary systems meet the safety and operating requirements of the LOFT Integral Test Program. This assurance is established by the design analysis and the QA program as discussed in Section 16.0; it is further enhanced by conducting the LOFT Acceptance Test Program. Most of these tests will be performed in the containment vessel, although some of the initial performance and calibration tests following assembly of the MTA in the high bay shop area of Building TAN-607 will be performed in that same area. The following tests will be performed on the MTA systems:

| | | |
|---|---|---|
| (1) | SO-18.01 | Blowdown System Non-MTA Portion Checkout |
| (2) | SO-20.02 | Primary Component Cooling System Initial Operation |
| (3) | IP-01.01-CF | Primary System Initial Fill |
| (4) | SO-20.04 | Primary Coolant Addition and Control Boron Control Test |
| (5) | IP-01.02-CF | Plant Cold Functional Tests |
| (6) | SO-31.02 | Secondary Coolant System Cold Operation Test |
| (7) | SO-34.01 | Shield Tank Initial Fill |
| (8) | SO-89.01 | Nuclear Instrumentation System Initial Operation Test |
| (9) | SO-92.01 | Secondary Coolant System Instrumentation and Control System Initial Checkout |
| (10) | IP-01.03-HF | Plant Hot Functional Tests |
| (11) | SO-29.01 | Pressurizer Controls Checkout Test |
| (12) | SO-31.03-HF | Secondary Coolant System Hot Functional Test |
| (13) | SO-87.01-HF | Experimental Measurement System Non-Core Instrumentation Checkout |

(14) SO-93.01 Plant Protection System - Initial Operation

(15) EOP-1.1 through 1.5 Nonnuclear LOCE (Pre-Core).

The objectives of the tests listed above may be summarized briefly as follows:

(1) Initial flush, fill, and hydrostatic proof test of fluid system pressure boundaries after the completion of fabrication, assembly, and NDT.

(2) Integrity verification of the electrical and control systems based on the requirement to ensure the maximum probability of achievement of the LOFT test objectives. The integrity checks for these systems includes installation checks, wiring checks, alignments, and operational tests.

(3) Flow tests for system pressure drops, pump performances (i.e., flow, voltage, and current), and control valve performances in accordance with specification requirements.

(4) Operation of system valves, filters, heat exchangers, etc., will be verified in accordance with specification requirements.

(5) A portion of the baseline data which may be required for requalification would be gathered at this time.

(6) Verification of system integrity during blowdown tests.

This inspection program meets the requirements of Criterion 32 (see Appendix 1-A).

### 5.4.2 Normal Maintenance

A preventive maintenance program delineates the standard periodic maintenance activities required by MTA components. Maintenance documents define the method of inspection and the itemized maintenance steps.

### 5.4.3 Requalification

Each major component will have a requalification plan. Requalification consists of the following steps:

(1) The data from each test will be examined for out-of-design-limit indications.

(2) If indicated necessary, physical checks of component dimensions and locations will be compared with pretest data.

(3) Areas of high stress, based on the system stress analysis, will have strain gages installed, and the data from these will be inspected.

(4) Critical welds will be examined if indicated necessary by the test data.

Based on the results of these data reviews, the need for further examination will be assessed. After any necessary repairs and before the next LOCE, hydrostatic strength and leak tests will be performed as required.

## 5.5 Special Features Having Safety Significance

The MTA includes many features which contribute to a high level of confidence in the safety and reliability of the LOFT Integral Test System. Sections 5.5.1 and 5.5.2 describe those features which provide safety through MTA design and protective systems.

### 5.5.1 MTA Design (First Level of Safety)

The MTA -- as designed, fabricated, and tested and as will be operated, requalified, and maintained -- provides a highly assured capability for reliable and predictable operations and an inherent capacity to prevent the occurrence of accidents by having the following features:

(1) The MTA structures and component foundations have been designed, fabricated, and analyzed in accordance with structural codes utilizing stress limits in accordance with American Institute of Steel Construction (AISC) requirements for normal and upset conditions. For emergency and faulted conditions, no member was allowed to form a plastic hinge and buckling was not permitted. The models, input, and results of the analysis of the MTA structure are provided in Reference 21.

(2) The MTA fluid systems have been designed and constructed to satisfy the requirements of ASME codes as listed in Section 5.1.3.

(3) RDT standards as listed in Section 5.1.3 have been incorporated into the design and fabrication of the MTA and its associated piping system to assure higher quality than required by conventional nuclear industry codes and standards.

(4) A QA program was followed, as described in Section 16.0, which provides assurance that the MTA was constructed, inspected, and tested in accordance with the applicable specifications, codes, and standards.

(5) The MTA was designed and analyzed for multiple LOCEs and, as such, is indicated to have a high degree of integrity, even when subjected to large thermal transients and mechanical and pressure loadings. The lifetime limitations of components will be carefully observed and requalification efforts will be utilized as required to assure component integrity.

(6) The MTA primary coolant system pressure is controlled by maintaining a steam and water phase in the pressurizer and is designed to permit transient operations while maintaining system pressure without uncovering the electrical heaters. (See Section 5.2.4.1.4.)

(7) Coolant chemistry in all fluid systems is maintained within limits to minimize corrosion, and sampling systems are provided to permit monitoring of chemistry conditions. Coolant chemistry will be sampled in accordance with technical specification frequencies. (See Sections 5.2.4.1.6, 11.1.1, 11.1.3, and 12.2.)

(8) The MTA is designed to withstand appropriate seismic disturbances. A dynamic analysis of the response of the MTA to such disturbances has been performed which indicates that the plant can be brought to a safe shutdown through a SSE[21,22].

(9) The MTA incorporates shielding to reduce radiation in the facility during operation and within the containment vessel following shutdown to acceptable levels. (See Section 5.2.3.)

(10) The primary coolant system contains two primary coolant pumps with independent power supplies and coastdown capability to prevent core damage in the event of loss of power or pump failure. (See Sections 15.2.6, 15.2.9, and 15.2.13.)

(11) Multiple redundant heat removal systems are provided for decay heat removal. (See Section 11.8.)

(12) A testing, maintenance, and requalification program with approved operating procedures provides integrity verification to assure that the MTA can meet the safety and operating requirements of the LOFT Integral Test Program as discussed in Section 5.4.

(13) Redundant makeup systems are provided, each with the capability to compensate for the design leakage rate and permit cooldown with that leakage while maintaining the pressurizer level in its operating band. (See Section 11.2.)

(14) Each of the MTA major components and all systems have been designed in accordance with approved design requirements contained in design documents (CDDs and SDDs). The requirements established in these design documents are reviewed and approved by ANC management and the AEC. Any changes to these requirements are processed through an established review and approval chain before they are incorporated into the system design. This assures that the components and systems are designed to satisfy the approved system design requirements. The CDDs and SDDs for the MTA are included as references in Section 5.6.

### 5.5.2 Protective Systems (Second Level of Safety)

The MTA is designed so that in the event of errors, malfunctions, or abnormal conditions, protective systems will arrest the event or limit the consequences to defined or acceptable levels. These systems are discussed below.

(1) The reactor and primary coolant systems are designed so that the various transients that occur during normal, upset, emergency, and faulted reactor system operations can be tolerated. (See Table 5-III.)

(2) Safety valves are provided to prevent overpressure of fluid systems above their specified design conditions in accordance with ASME code requirements. (See Section 5.2.4.1.4.)

(3) A portion of the ESFs is located on the MTA, viz, the ECC injection lines. ESFs are provided to minimize the consequences of abnormal conditions. These features include redundant ECCS (see Section 7.0).

(4) PPS are provided to minimize the consequences of abnormal conditions. Reactor shutdown scrams are established to assure that safety limits are not exceeded (see Section 9.0).

(5) Purification systems, including ion exchanger resin beds and filters, are provided to minimize radioactivity in the fluid systems in the event of fuel cladding leakage. (See Section 11.2.)

## 5.6 References[a]


1. Aerojet Nuclear Company, LOFT Program Division, "LOFT Integral Test System Requirements Document", SRD-1.
2. Idem, SDD 1.1, "Mobile Test Assembly".
3. Idem, SDD 1.1.4, "Primary Coolant System and Subsystems".
4. R. C. Guenzler and V. W. Gorman, "LOFT Seismic Analysis Method and Design Basis Input", Aerojet Nuclear Company, LTR 10-7.
5. Aerojet Nuclear Company, CDD 1.1.10, "Dolly, Shield Tank, and Component Support System Assembly".
6. R. C. Guenzler, "SHAKER-1 - An Ensemble of Computer Programs for Structural Dynamic Response Analysis", Aerojet Nuclear Company, LTR 10-8.
7. Aerojet Nuclear Company, LOFT Program Division, SDD 1.2.9, "Radiation Shielding System".
8. Idem, CDD 1.1.4.3, "Primary Coolant Pressure Boundary Valves".
9. Idem, CDD 1.1.4.10, "Primary Coolant Pressure Boundary Piping".
10. Idem, CDD 1.1.1.9, "Reactor Vessel".
11. Idem, Thermal Reactor Safety Program Division, "LOFT Program Requirements Document", PRD-1.

12. Idem, LOFT Program Division, CDD 1.1.4.1, "Steam Generator".

13. Idem, Specification ANC-60057, "LOFT Steam Generator".

14. Idem, CDD 1.1.4.4, "Pressurizer".

15. Idem, Specification ANC-60044, "LOFT Pressurizer".

16. D. H. Stevenson, "LOFT Overpressure Protection Report", Aerojet Nuclear Company, LTR 1144-11.

17. Aerojet Nuclear Company, LOFT Program Division, Specification ANC-60052, "Refurbishment, Modification, and Qualification of LOFT Primary Coolant Pumps".

18. Idem, CDD 1.1.4.2, "Primary Coolant Pump".

19. Idem, SDD 1.1.3, "Emergency Core Cooling System".

20. Idem, SDD 1.1.2, "Blowdown System".

21. R. G. Rahl et al, "Final LOFT MTA Structural Analysis", Aerojet Nuclear Company, LTR 11-12 (to be published).

22. J. G. Arendts et al, "Preliminary LOFT MTA Dynamics Analysis", Aerojet Nuclear Company, LTR 11-4.

[a] Current issues unless otherwise indicated.

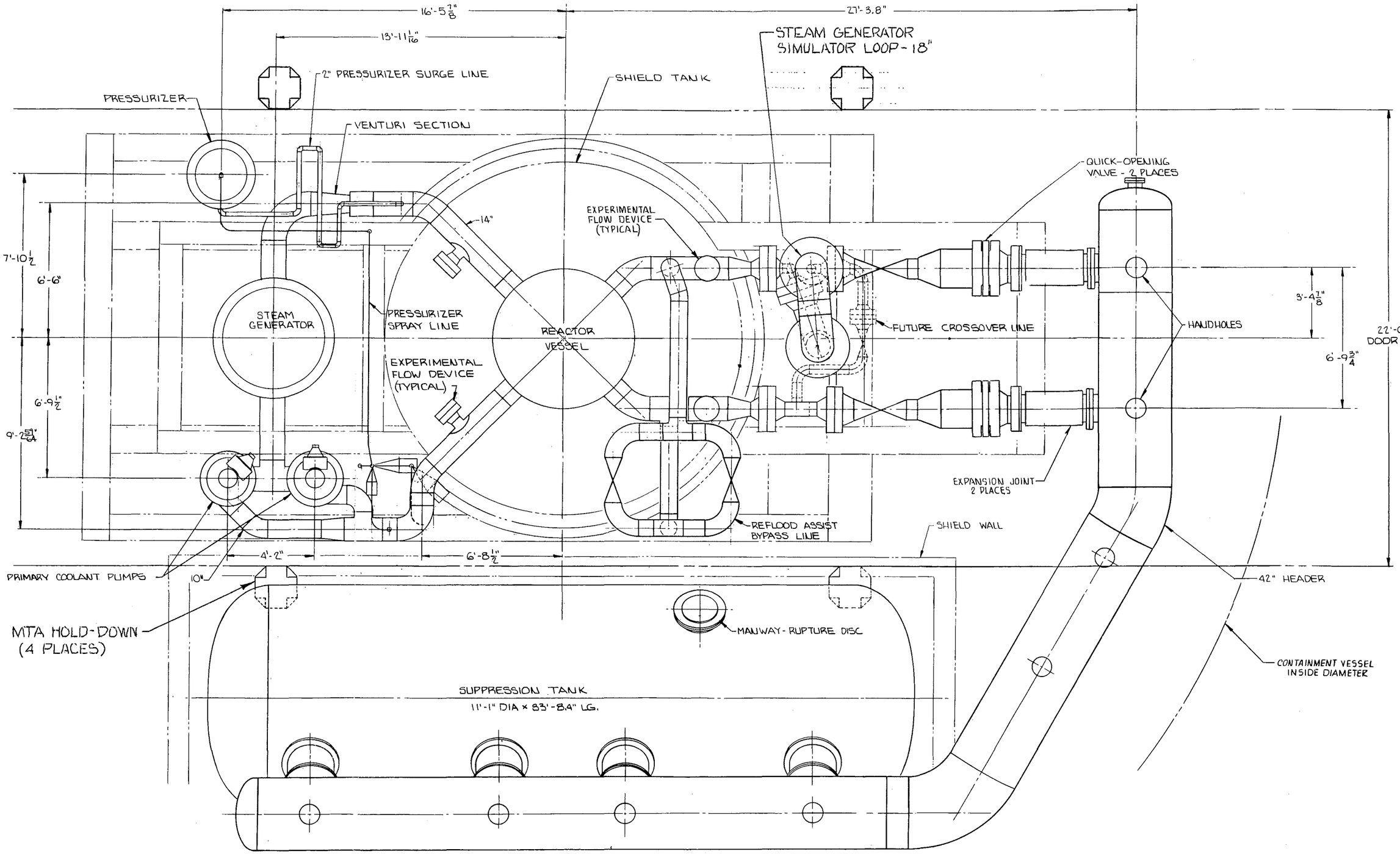


FIG. 5-1 PRIMARY COOLANT SYSTEM LAYOUT (PLAN VIEW).

(204699, 1/2, NR)

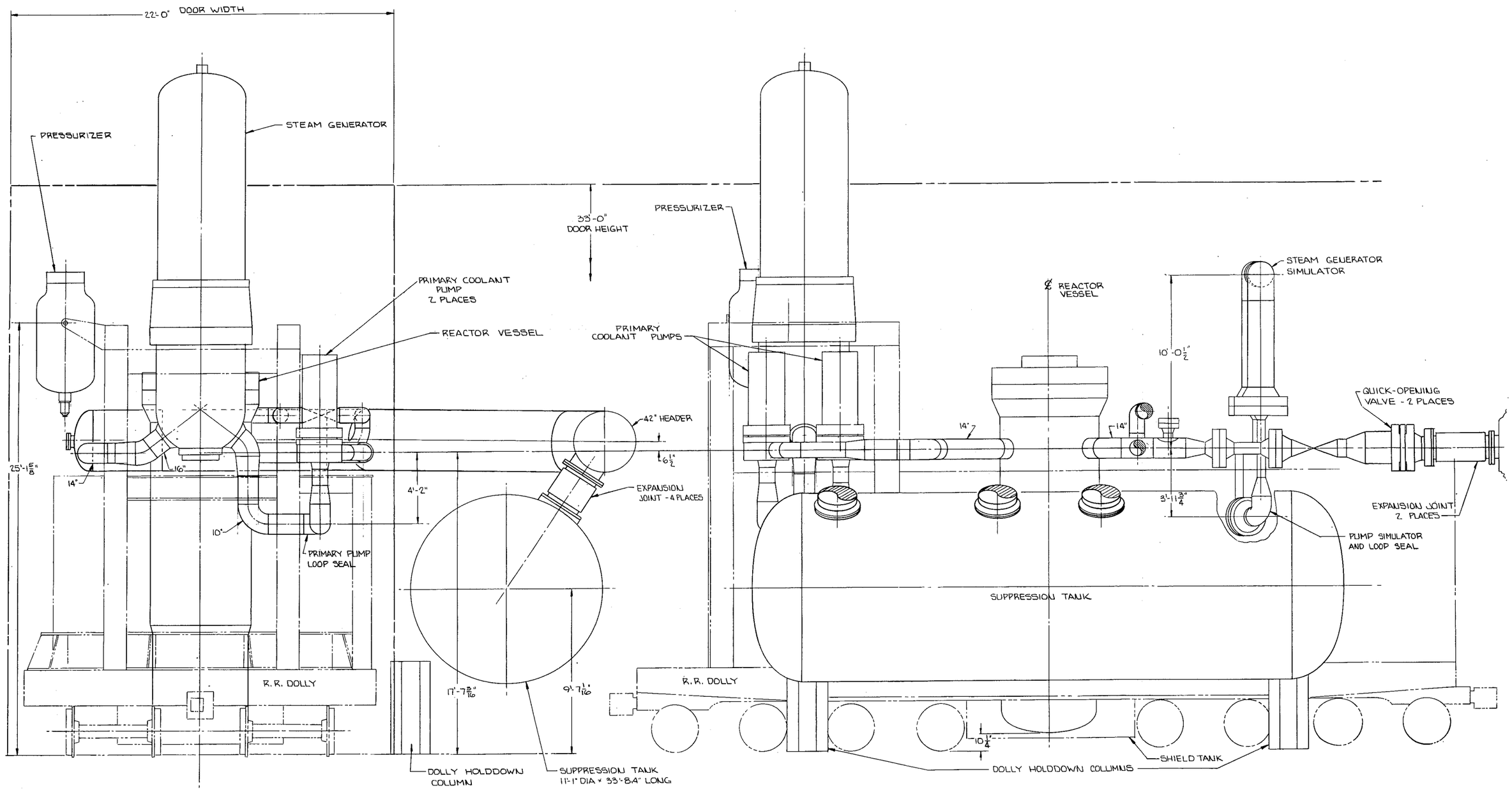


FIG. 5-2 PRIMARY COOLANT SYSTEM LAYOUT (ELEVATION).

(204699, 2/2, NR)

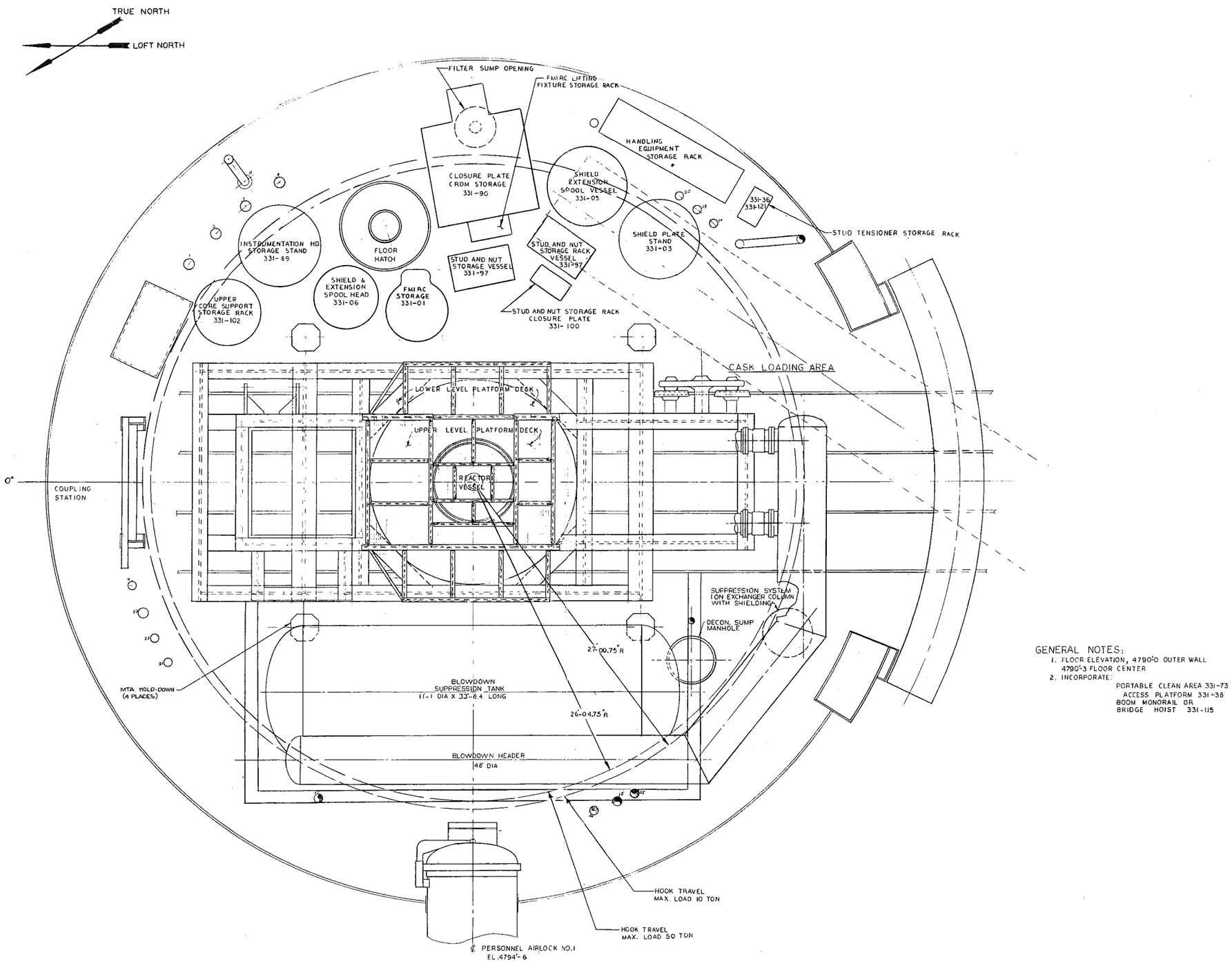


GENERAL NOTES:

1. FLOOR ELEVATION, 4790'-0 OUTER WALL
   4790'-3 FLOOR CENTER
2. INCORPORATE:
   PORTABLE CLEAN AREA 331-73
   ACCESS PLATFORM 331-38
   BOOM MONORAIL OR
   BRIDGE HOIST 331-115

FIG. 5-3 PLAN VIEW OF MTA IN CONTAINMENT VESSEL.

(204172, NR)

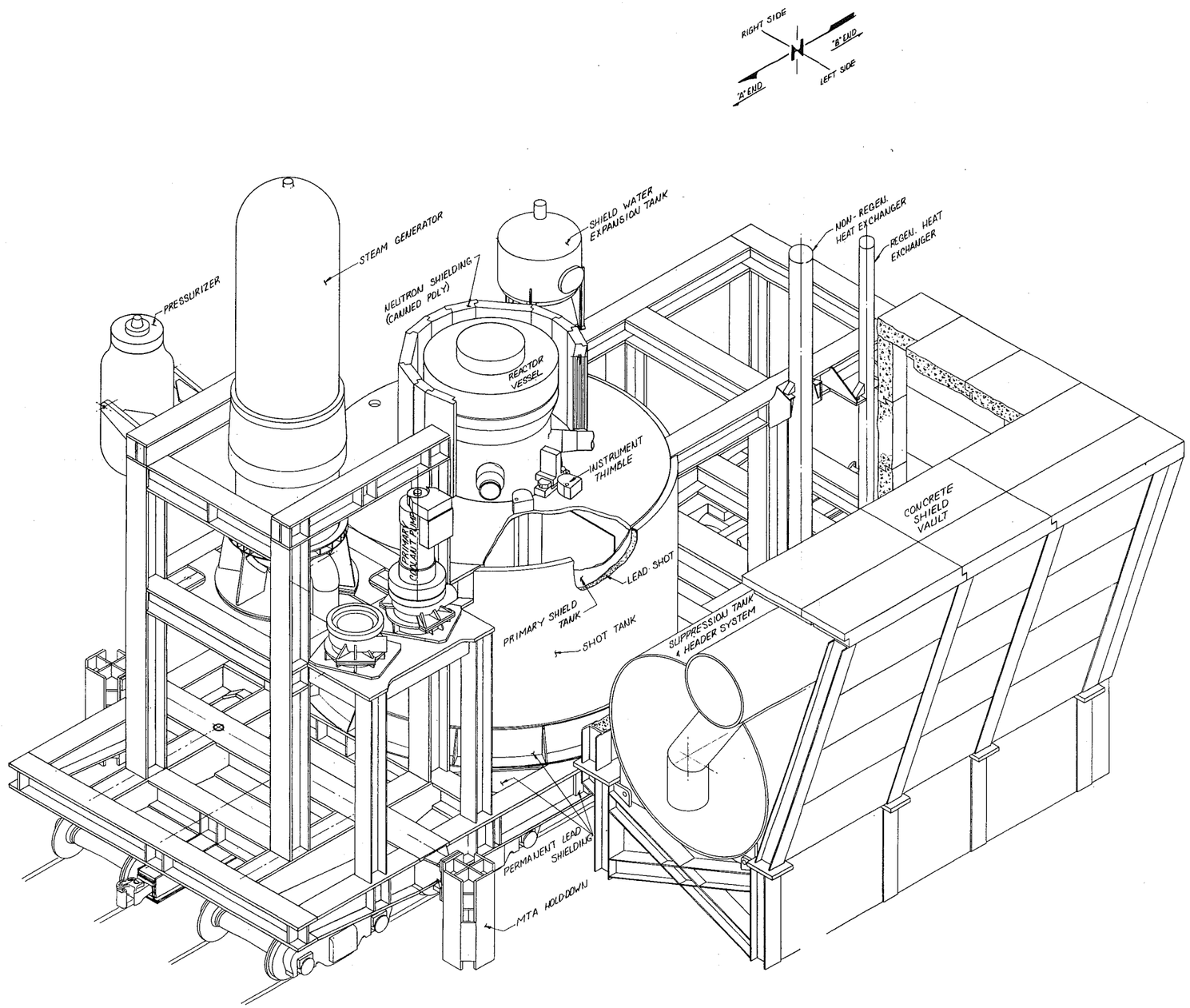


FIG. 5-4 GENERAL MTA SHIELDING.

(204862)

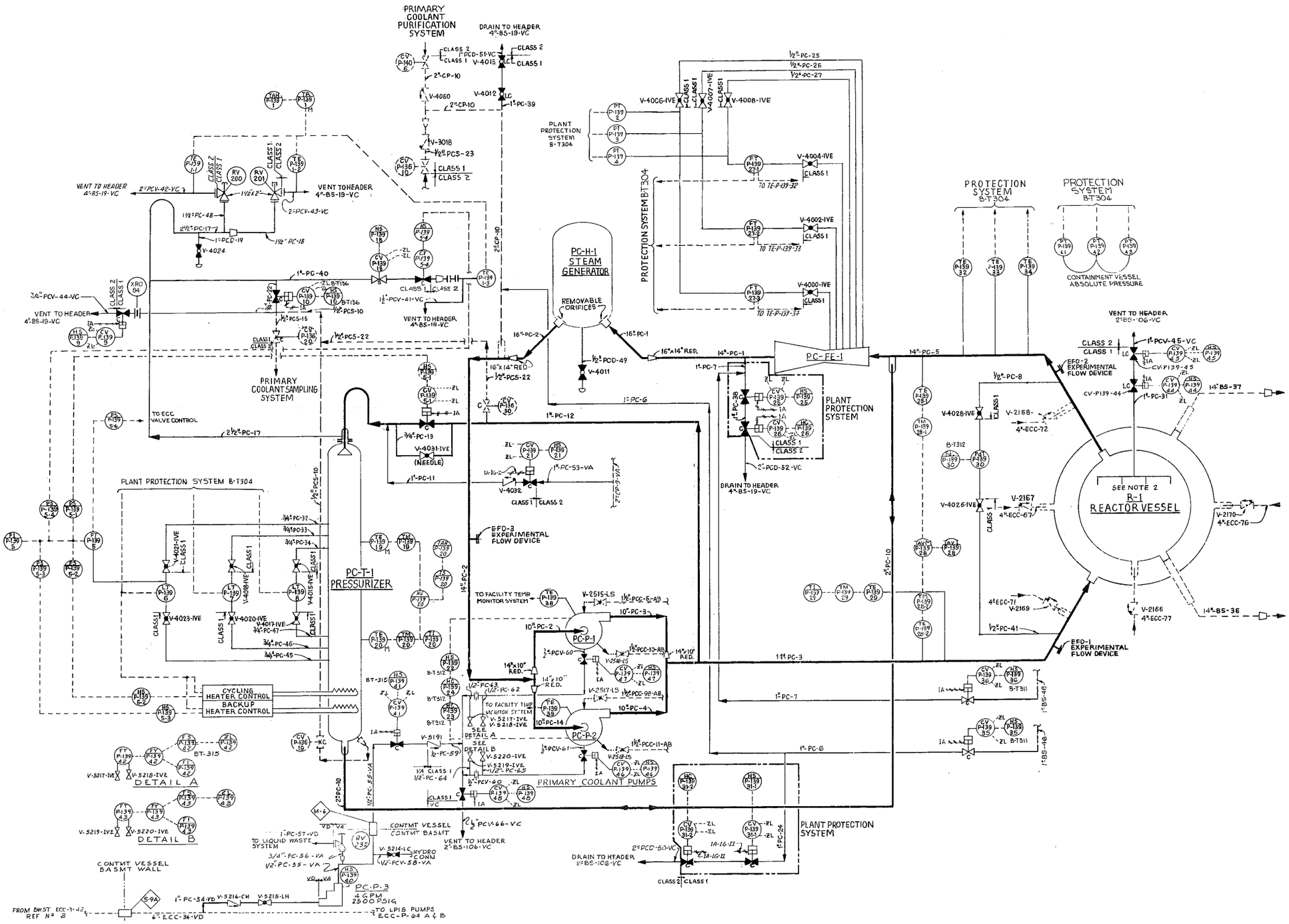


FIG. 5-5 PRIMARY COOLANT SYSTEM P AND ID.

(650-P-139, G)

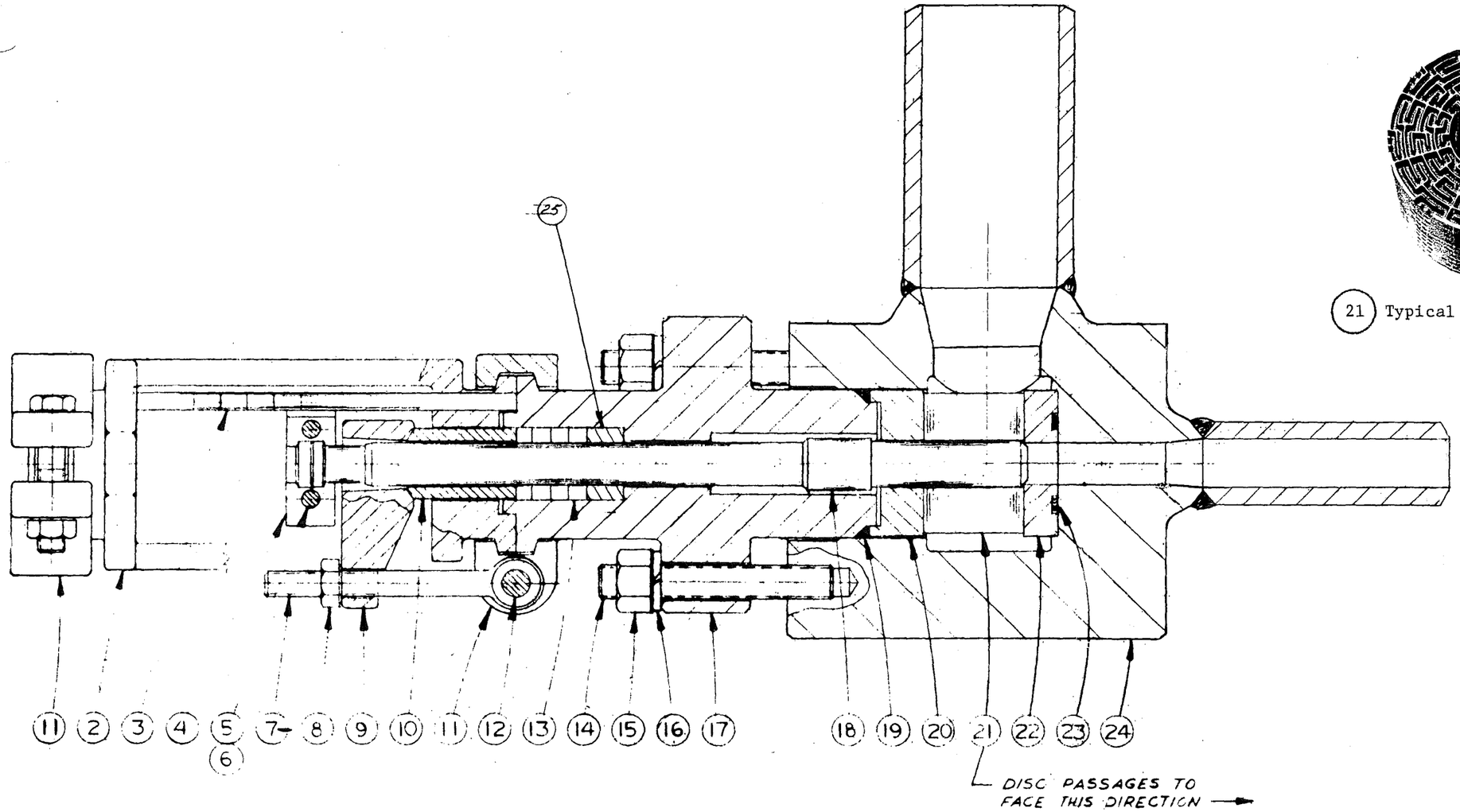

21 Typical Disc Stack Assembly (NTS)

| | | | |
|---|---|---|---|
| 1 | 25 | 110709 | PACKING SLEEVE |
| 1 | 24 | 112232 | BODY |
| 1 | 23 | R4-25B | GASKET FLEXITALIC |
| 1 | 22 | 111233 | SEAT RING |
| 1 | 21 | 112234 | DISC STACK ASSY |
| 1 | 20 | 111234 | SPACER |
| 1 | 19 | 102953 | SEAL |
| 1 | 18 | 1029287 | SPINDLE |
| 1 | 17 | 112233 | BONNET |
| 6 | 16 | ½ MED | LOCK WASHER |
| | | | |
| 6 | 15 | ½-13 HVY | HEX NUT |
| 6 | 14 | ½-13x3¼ | STUD |
| 6 | 13 | 102868-5 | PACKING RING |
| 4 | 12 | ⅝-16x2 | HEX HD. CAP SCR |
| 4 | 11 | 103119 | YOKE CLAMP |
| 1 | 10 | 110708 | GLAND SLEEVE |
| 1 | 9 | 103358 | GLAND FLANGE |
| 6 | 8 | ⅝-16 | HEX NUT |
| 2 | 7 | 105863 | EYE BOLT |
| 2 | 6 | ¼-20 | HEX NUT REG |
| 2 | 5 | ¼-20x1½ | MACH. SCR HEX HD |
| 2 | 4 | 102831 | HALF CLAMP |
| 1 | 3 | 103397-28 | TRAVEL ROD ASSY. |
| 1 | 2 | 109429 | YOKE |
| - | 1 | | NOT USED |
| PART NO. | REQ'D | PART NO. | DESCRIPTION |

FIG. 5-6 TYPICAL "SELF" DRAG DISC VALVE DETAILS.

(CONTROL COMPONENTS INC. 112231 R)

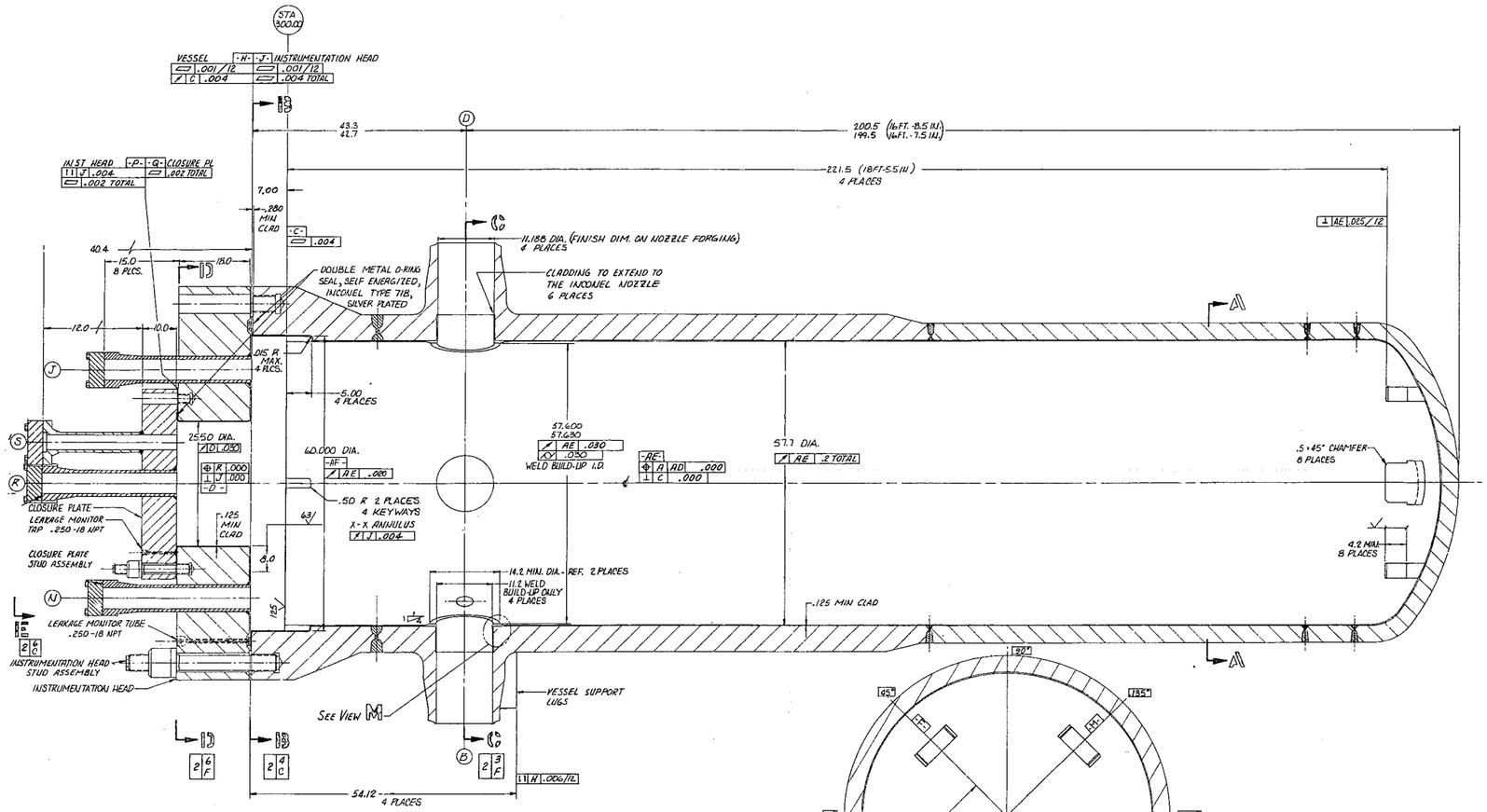


AH - REFERENCE RADIAL CENTERLINE; CORE BARREL KEYWAYS @ 157°30' & 337°30'
AG - REFERENCE RADIAL CENTERLINE; CORE BARREL KEYWAYS @ 67°30' & 247°30'
AF - SHELL WALL ABOVE -C-
AE - VESSEL CENTERLINE.
AD - SCRIBED LINES; FLANGE TOP SURFACE AT 90° & 270°.
AC - LOCATING DIAMETER; CONTROL ROD DRIVE MECHANISM NOZZLE AT 180°.
AB - LOCATING DIAMETER; CONTROL ROD DRIVE MECHANISM NOZZLE AT 90°.
AA - LOCATING DIAMETER; CONTROL ROD DRIVE MECHANISM NOZZLE AT 0°.
Z - FACE OF FLG. ON NOZZLES "B,H,J,K,L,M,N,&P"
Y - BORE OF FLG. ON NOZZLES "B,H,J,K,L,M,N,&P" FOR 4" INSTRUMENT PENETRATIONS.
X - FACE OF FLG. ON NOZZLE "R"
W - BORE OF FLG. ON NOZZLE "R" FOR 5" INSTRUMENT PENETRATION.
V - BOTTOM SURFACE; VESSEL SUPPORT LUGS.
U - LOCATING DIAMETER; VESSEL SUPPORT LUG 2.38 DIA. HOLE.
T - CENTERLINE CONNECTING OPPOSITE VESSEL SUPPORT LUGS @ 80° & 260°
S - CENTERLINE CONNECTING OPPOSITE VESSEL SUPPORT LUGS @ 170° & 350°
R - KEYWAYS; BOTTOM OF INSTRUMENTATION HEAD.
Q - MATING SURFACE WITH INSTRUMETATION HEAD; BTM OF CLOSURE PLATE.
P - GASKET SURFACE; TOP OF INSTRUMENTATION HEAD.
N - LOCATING DIAMETER; CONTROL ROD DRIVE MECHANISM NOZZLE AT 270°.
M - REFERENCE RADIAL CENTERLINE; FILLER SUPPORT LUGS @ 135°
L - KEYWAYS; BOTTOM OF CLOSURE PLATE AT 0° AND 180°.
K - KEYWAYS; TOP OF INSTRUMENTATION HEAD AT 0° AND 180°.
J - MATING SURFACE WITH VESSEL SHELL FLANGE; BTM OF INSTRUMETATION HEAD.
H - GASKET SURFACE; TOP OF VESSEL.
G - KEYWAYS; BOTTOM OF CLOSURE PLATE AT 90° AND 270°.
F - REFERENCE RADIAL CENTERLINE; FILLER SUPPORT LUGS @ 45°
E - KEYWAYS; TOP OF INSTRUMENTATION HEAD AT 90° AND 270°
D - INSTRUMENTATION HEAD CENTERLINE.
C - SURFACE OF INTERNAL SUPPORT LEDGE.
B -
A - SCRIBED LINES; FLANGE TOP SURFACE AT 0° & 180°.

DATUM PLANE REFERENCES -X-

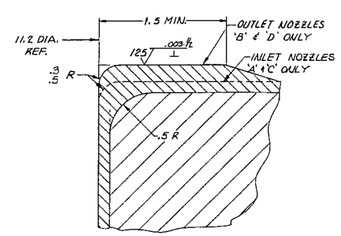


VIEW M
SCALE: 2/1
4 PLACES (2 OF EACH TYPE)

DO NOT FABRICATE FROM THIS DRAWING FOR RECORD ONLY.

ENVELOPE DRAWING

FIG. 5-7 LOFT REACTOR VESSEL.

(203925, F)

## NOZZLES & PENETRATIONS

| DESIGNATION | QTY | DESCRIPTION |
|---|---|---|
| 1A THRU 1H & 1J THRU 1M | 12 | HEATER NOZZLES, NI-CR-FE |
| 2A THRU 2F | 6 | LEVEL NOZZLES, 3/4 SCH 80, NI-CR-FE |
| 3A | 1 | SAMPLE NOZZLE, 1" SCH 160, NI-CR-FE |
| 4A | 1 | SURGE NOZZLE, 2 SCH 160, NI-CR-FE |
| 5A | 1 | SPRAY NOZZLE 1" SCH 160, STAINLESS STEEL |
| 5B | 1 | PRESSURE RELIEF NOZZLE 2 1/2 SCH 160, STAINLESS STEEL |
| 5C | 1 | PENETRATION FOR THERMAL SLEEVE SPRAY & PRESSURE RELIEF NOZZLE |
| 6A & 6B | 2 | THERMOCOUPLE CONNECTION |

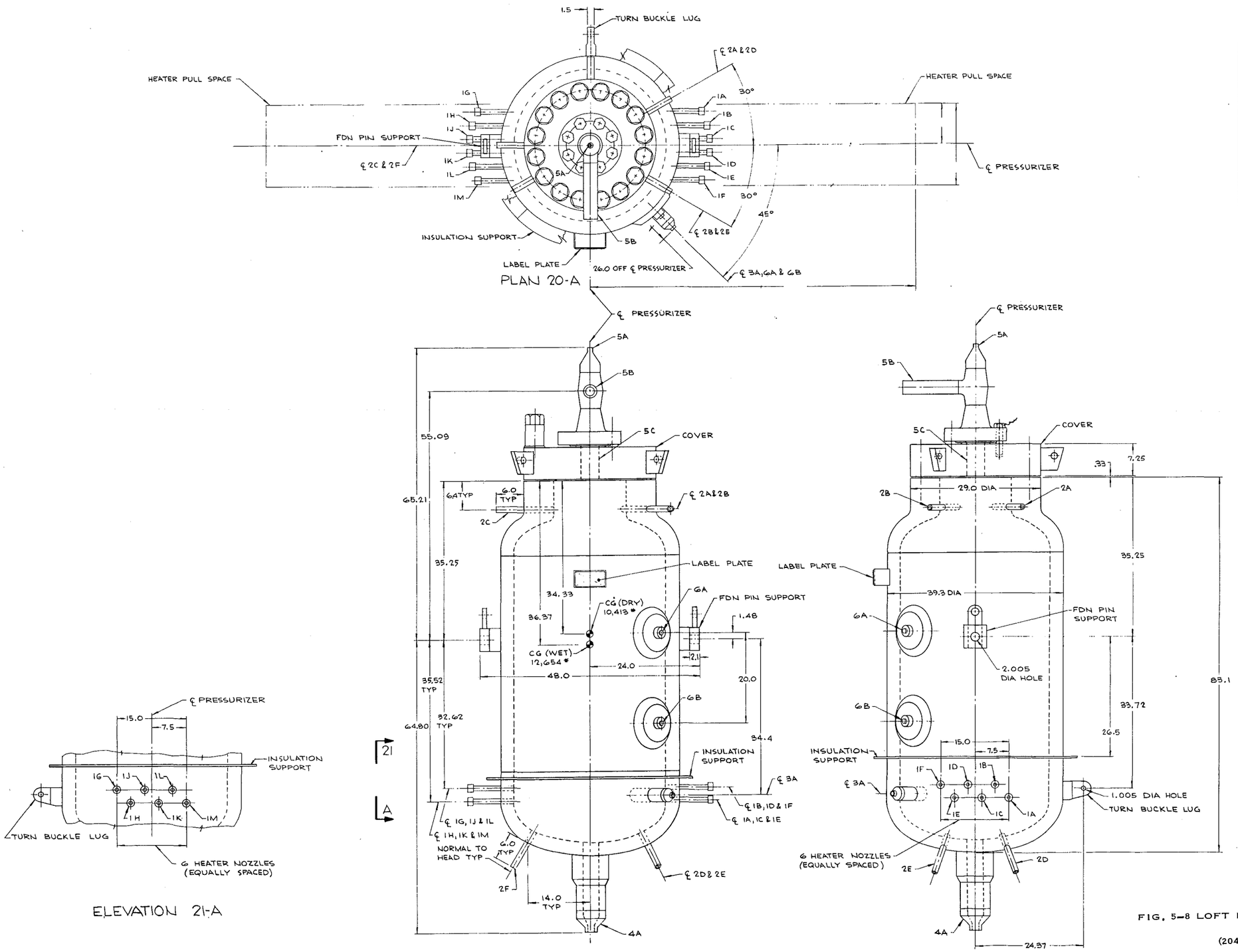


FIG. 5-8 LOFT PRESSURIZER DETAILS.

(204236)

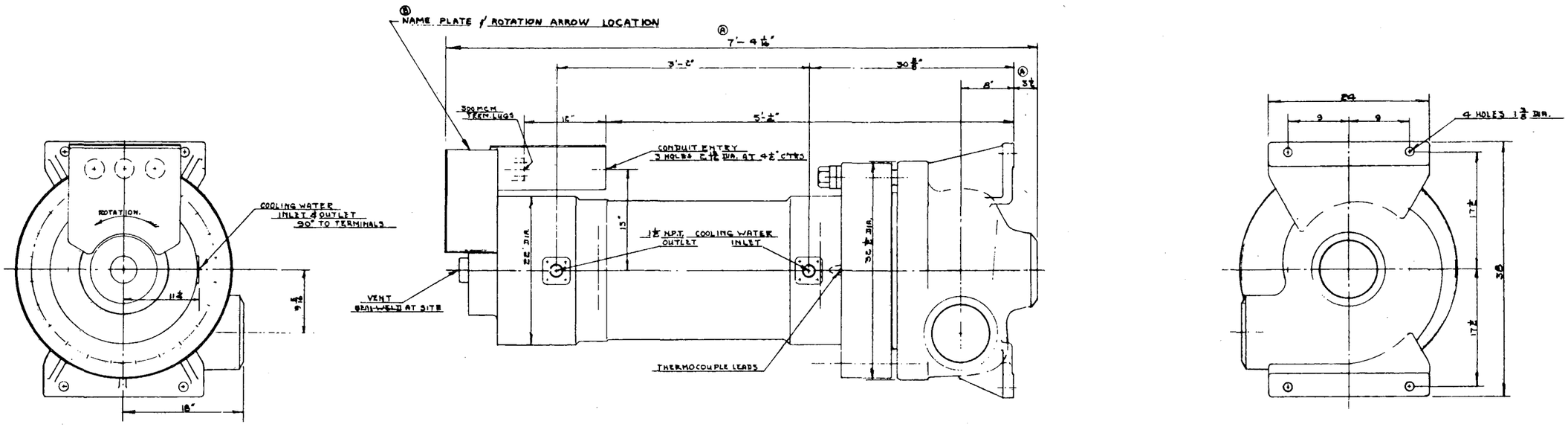


Byron Jackson Division
Borg-Warner Corp.
10 x 10 x 11-1/2 DVSS

FIG. 5-9 LOFT PRIMARY PUMP.

(BJ2C, 3361, 2)

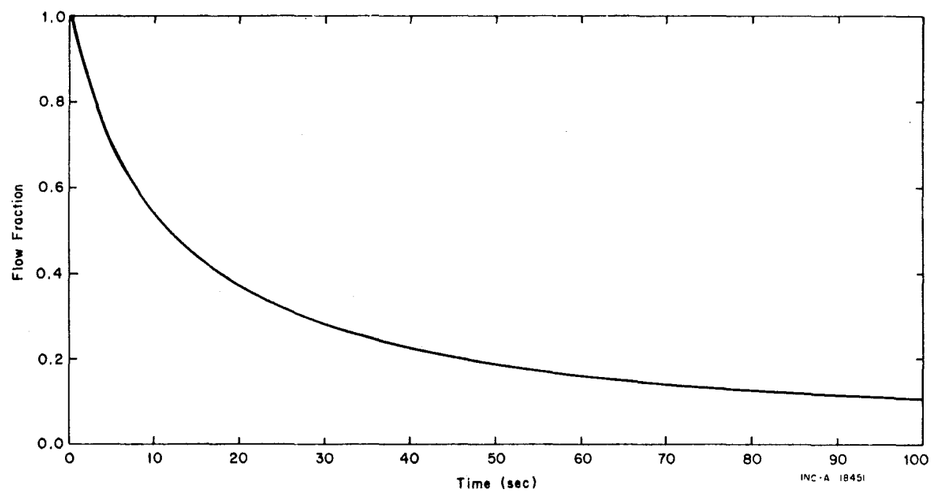


FIG. 5-10 LOFT PUMP COASTDOWN.

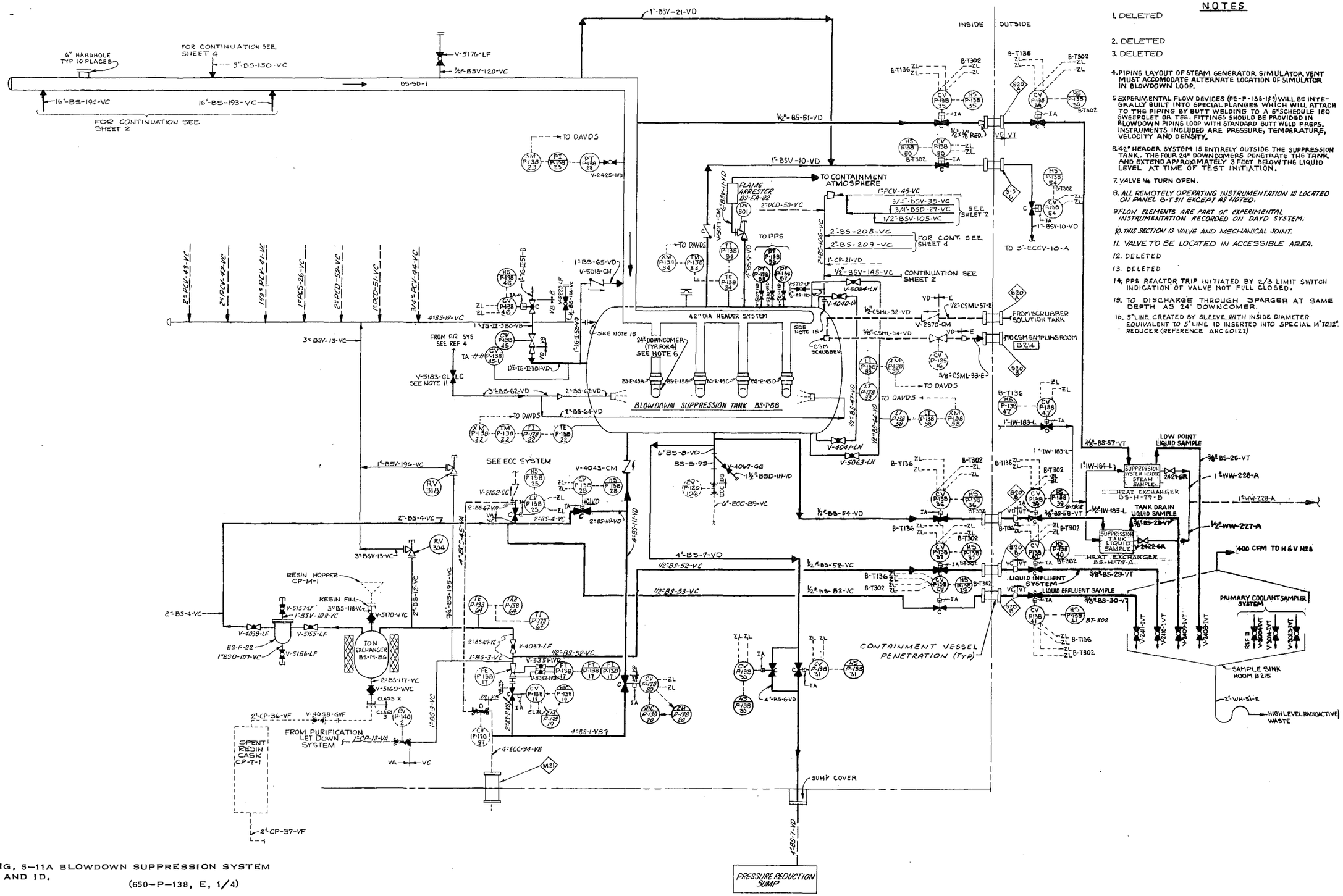


## NOTES

1. DELETED
2. DELETED
3. DELETED
4. PIPING LAYOUT OF STEAM GENERATOR SIMULATOR VENT MUST ACCOMODATE ALTERNATE LOCATION OF SIMULATOR IN BLOWDOWN LOOP.
5. EXPERIMENTAL FLOW DEVICES (FE-P-138-189) WILL BE INTEGRALLY BUILT INTO SPECIAL FLANGES WHICH WILL ATTACH TO THE PIPING BY BUTT WELDING TO A 6" SCHEDULE 160 SWEEPOLET OR TEE. FITTINGS SHOULD BE PROVIDED IN BLOWDOWN PIPING LOOP WITH STANDARD BUTT WELD PREPS. INSTRUMENTS INCLUDED ARE PRESSURE, TEMPERATURE, VELOCITY AND DENSITY.
6. 42" HEADER SYSTEM IS ENTIRELY OUTSIDE THE SUPPRESSION TANK. THE FOUR 24" DOWNCOMERS PENETRATE THE TANK AND EXTEND APPROXIMATELY 3 FEET BELOW THE LIQUID LEVEL AT TIME OF TEST INITIATION.
7. VALVE ¼ TURN OPEN.
8. ALL REMOTELY OPERATING INSTRUMENTATION IS LOCATED ON PANEL B-T-311 EXCEPT AS NOTED.
9. FLOW ELEMENTS ARE PART OF EXPERIMENTAL INSTRUMENTATION RECORDED ON DAVD SYSTEM.
10. THIS SECTION IS VALVE AND MECHANICAL JOINT.
11. VALVE TO BE LOCATED IN ACCESSIBLE AREA.
12. DELETED
13. DELETED
14. PPS REACTOR TRIP INITIATED BY 2/3 LIMIT SWITCH INDICATION OF VALVE NOT FULL CLOSED.
15. TO DISCHARGE THROUGH SPARGER AT SAME DEPTH AS 24" DOWNCOMER.
16. 5" LINE CREATED BY SLEEVE WITH INSIDE DIAMETER EQUIVALENT TO 5" LINE ID INSERTED INTO SPECIAL 14" TO 12" REDUCER (REFERENCE ANC 60122)

FIG. 5-11A BLOWDOWN SUPPRESSION SYSTEM P AND ID.
(650-P-138, E, 1/4)

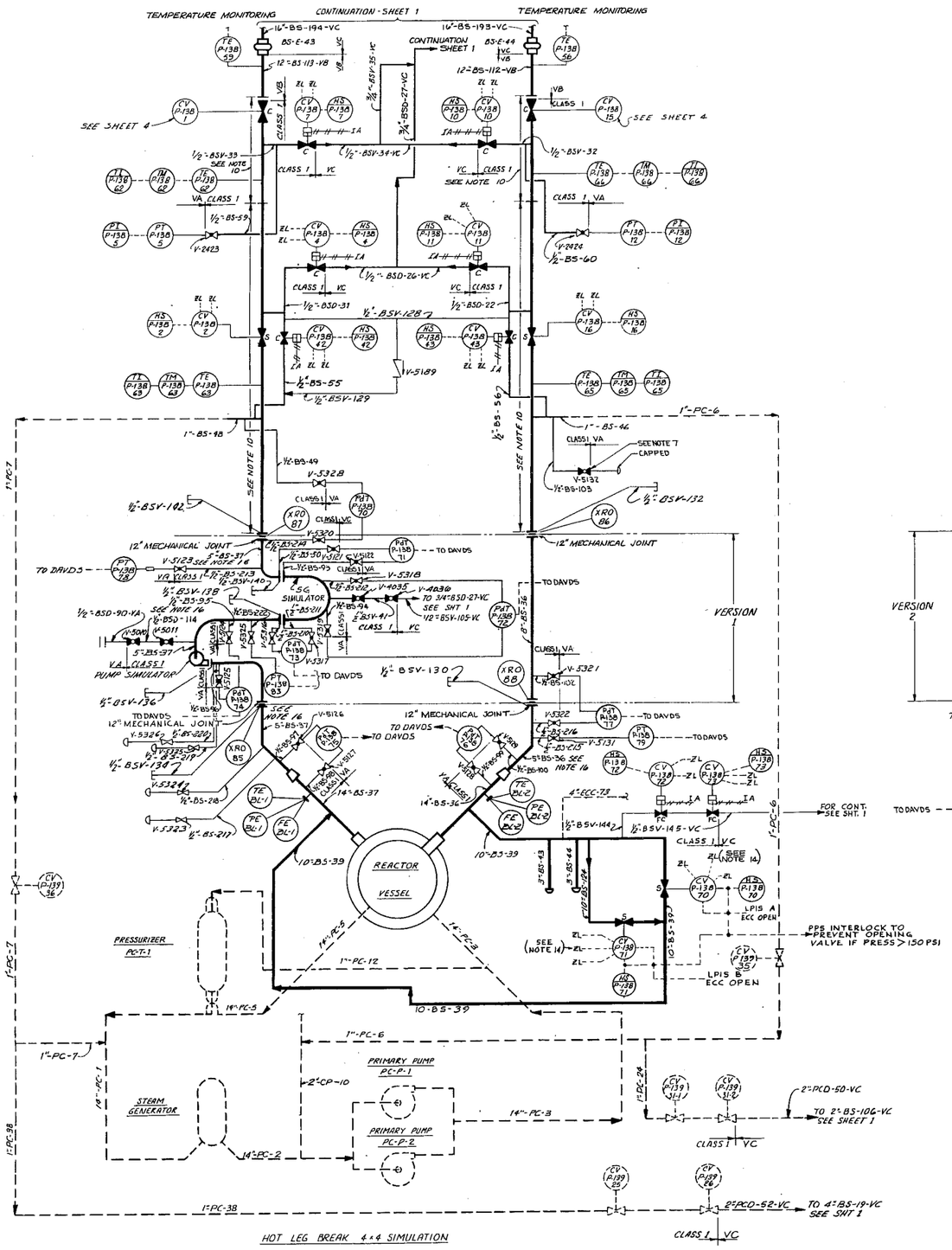


HOT LEG BREAK 4 x 4 SIMULATION

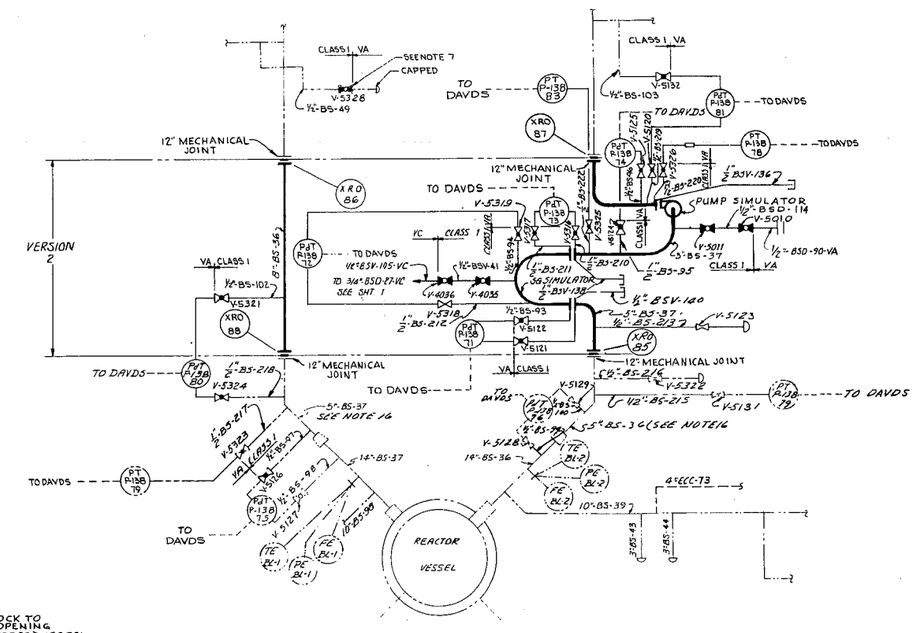


COLD LEG BREAK 4 x 4 SIMULATION

FIG. 5-11B BLOWDOWN SUPPRESSION SYSTEM P AND ID.

(650-P-138, C, 2/4)

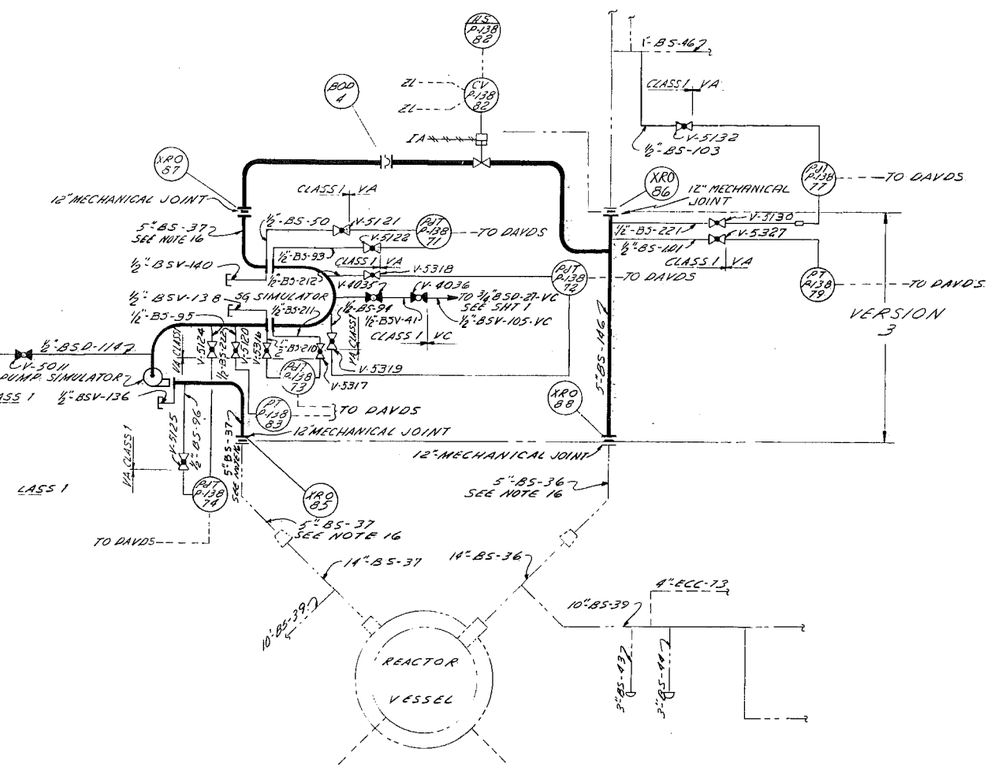


COMMUNICATIVE
HOT LEG BREAK 4x4 SIMULATION

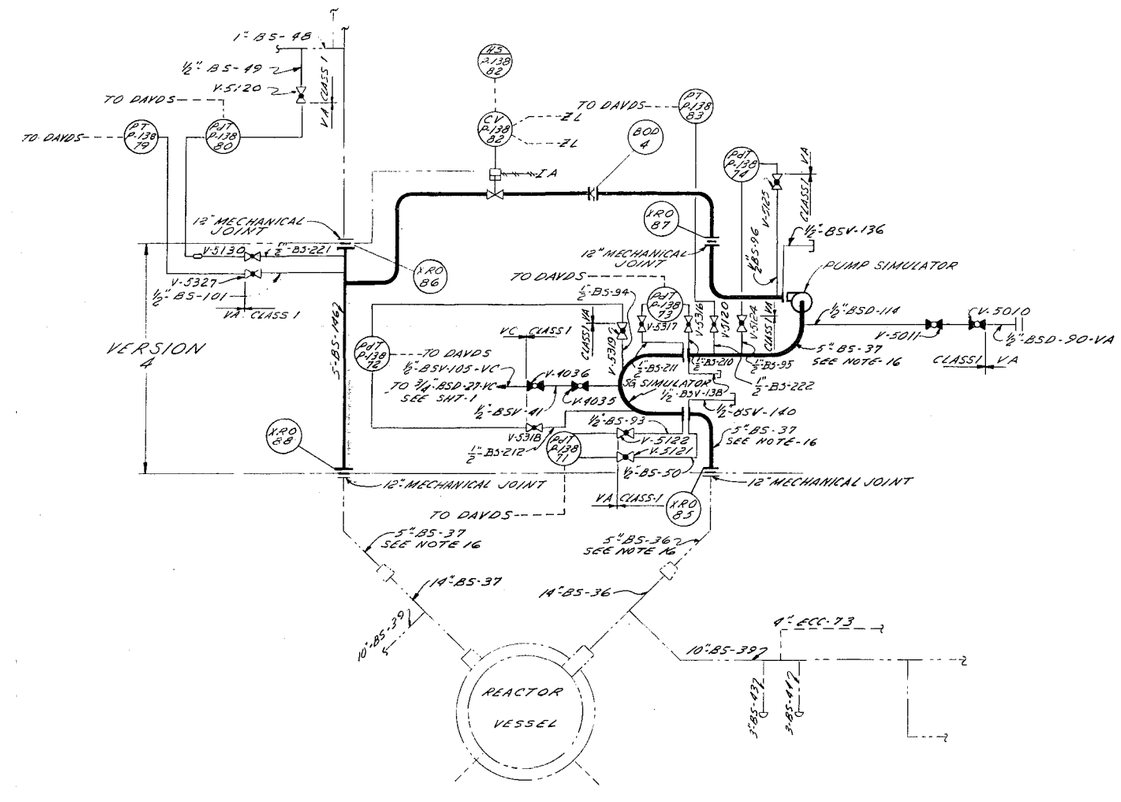


COMMUNICATIVE
COLD LEG BREAK 4x4 SIMULATION

FIG. 5-11C BLOWDOWN SUPPRESSION SYSTEM
P AND ID. (650-P-138, A, 3/4)

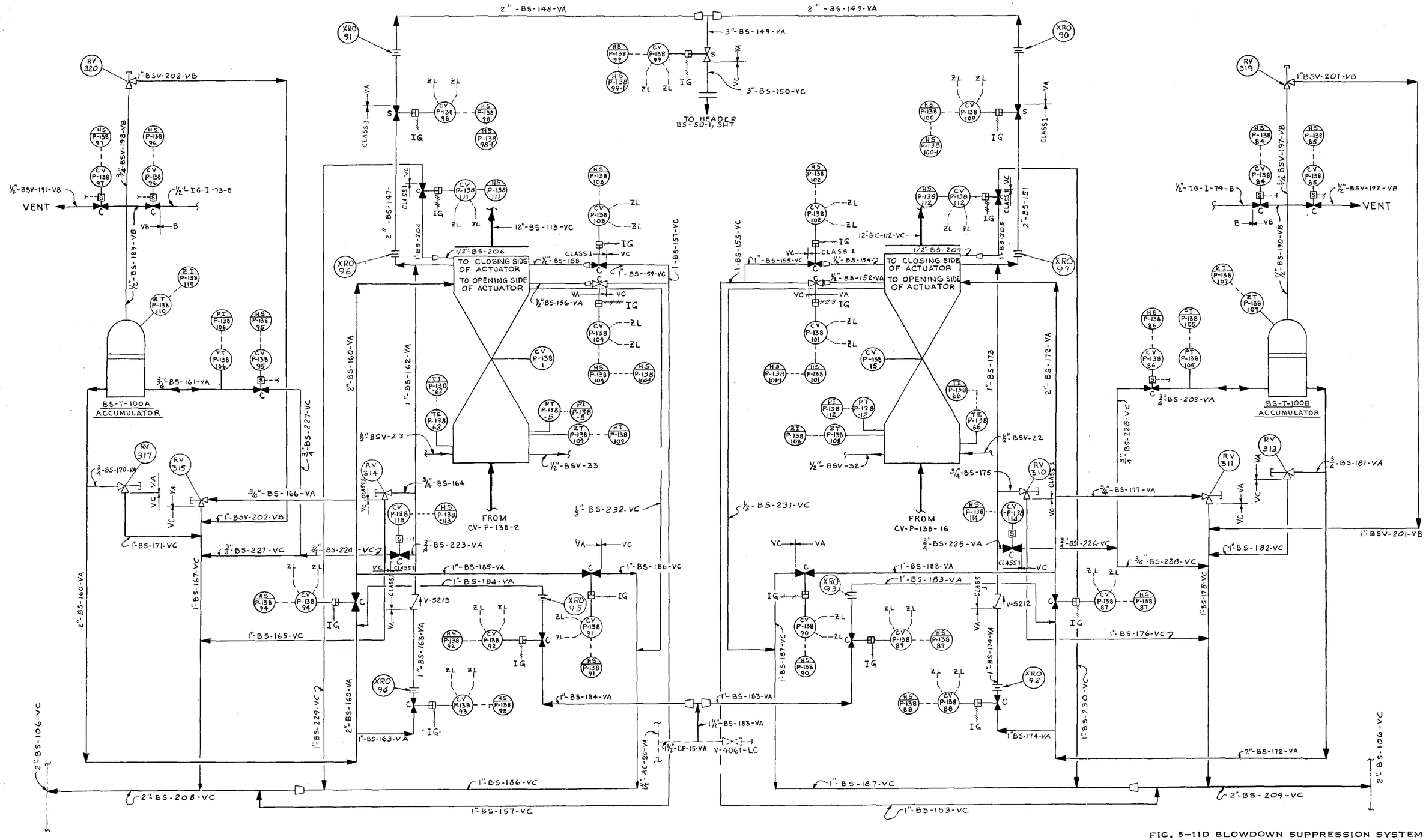


FIG. 5-11D BLOWDOWN SUPPRESSION SYSTEM P AND ID. (650-P-138, A, 4/4)

CONTENTS


6.0 CONTAINMENT FACILITY . . . . . 6-1

6.1 Containment Facility . . . . . 6-2

6.1.1 Design Basis and Criteria . . . . . 6-2
6.1.2 General Description . . . . . 6-2
6.1.3 Design Loads . . . . . 6-5

6.1.3.1 Experiments and Postulated Accident Conditions . 6-6
6.1.3.2 Energy and Mass Releases . . . . . 6-6
6.1.3.3 Dead and Live Loads . . . . . 6-6
6.1.3.4 Design Temperatures . . . . . 6-6
6.1.3.5 Design Pressures . . . . . 6-7
6.1.3.6 Wind . . . . . 6-8
6.1.3.7 Snow Loading . . . . . 6-8
6.1.3.8 Earthquake . . . . . 6-8
6.1.3.9 Tornado . . . . . 6-8

6.1.4 Design Leakage Rate . . . . . 6-9
6.1.5 Codes and Standards . . . . . 6-9

6.1.5.1 Government - AEC . . . . . 6-9
6.1.5.2 Nongovernment . . . . . 6-9

6.1.6 Penetrations . . . . . 6-11

6.1.6.1 Piping, Duct, and Electrical Penetrations . . . . . 6-11
6.1.6.2 Personnel Access Airlocks . . . . . 6-12
6.1.6.3 Railroad Access Door . . . . . 6-13

6.1.7 Shielding . . . . . 6-14
6.1.8 Vacuum Relief . . . . . 6-14

6.2 Containment Isolation System . . . . . 6-15

6.2.1 Design Basis . . . . . 6-15

6.2.1.1 Accident Conditions . . . . . 6-15
6.2.1.2 Normal Operation . . . . . 6-16

6.2.2 System Design and Evaluation . . . . . 6-17

6.3 Pressure Reduction Spray System . . . . . 6-32

6.3.1 Design Basis . . . . . 6-32
6.3.2 System Description and Evaluation . . . . . 6-33

6.4 Containment HV System . . . . . 6-37

6.4.1 Design Basis . . . . . 6-37
6.4.2 System Description and Evaluation . . . . . 6-38

6.5 Circular Crane and Access System . . . . . 6-40

6.5.1 Design Basis . . . . . 6-40
6.5.2 System Description and Evaluation . . . . . 6-40

6.6 Containment Leak Test System. . . . . 6-41

6.6.1 Design Basis . . . . . 6-41
6.6.2 System Description and Evaluation . . . . . 6-42

6.6.2.1 Pressurization and Depressurization System . . . 6-42
6.6.2.2 Leak Rate Test System . . . . . 6-43

6.6.2.2.1 Absolute Method. . . . . 6-44
6.6.2.2.2 Superimposed Leak Method . . . . . 6-44

6.7 Containment Sampling and Hydrogen Detection System . . . . . 6-46

6.7.1 Design Basis . . . . . 6-46
6.7.2 System Description and Evaluation. . . . . 6-46

6.8 Containment Personnel Airlocks . . . . . 6-47

6.8.1 Design Basis . . . . . 6-47
6.8.2 System Description and Evaluation . . . . . 6-47

6.8.2.1 Containment Airlocks . . . . . 6-48
6.8.2.2 Membrane Escape Route . . . . . 6-49

6.9 Television System . . . . . 6-50

6.9.1 Design Basis . . . . . 6-50
6.9.2 System Description and Evaluation . . . . . 6-50

6.10 Blowdown Suppression System . . . . . 6-51

6.11 Decontamination System . . . . . 6-51

6.11.1 Design Basis . . . . . 6-51
6.11.2 System Description and Evaluation . . . . . 6-51

6.12 Tests and Inspections . . . . . 6-52

6.13 Special Features Having Safety Significance . . . . . 6-52

6.13.1 Facility Design (First Level of Safety) . . . . . 6-52
6.13.2 Protection Systems (Second Level of Safety) . . . . . 6-55

6.14 References. . . . . 6-56

APPENDIX 6-A - CONTAINMENT MECHANICAL DESIGN AND ANALYSIS . . . . . 6-77

6.A.1 Railroad Door and Bridge . . . . . 6-77

6.A.1.1 Support and Transport System . . . . . 6-77

6.A.1.1.1 Rails . . . . . 6-78
6.A.1.1.2 Door Trucks . . . . . 6-79
6.A.1.1.3 Top Guide Assemblies. . . . . 6-80
6.A.1.1.4 Drive System. . . . . 6-81
6.A.1.1.5 Towbar. . . . . 6-82
6.A.1.1.6 Bumpers. . . . . 6-82
6.A.1.1.7 Emergency Door Pulling . . . . . 6-82
6.A.1.1.8 Bridge Structure . . . . . 6-83
6.A.1.1.9 Bridge Trucks. . . . . 6-84
6.A.1.1.10 Bridge Locking Keys. . . . . 6-85

6.A.1.2 Enclosure Framing . . . . . 6-85

6.A.1.2.1 Weather Seal Mounting Plane . . . . . 6-85
6.A.1.2.2 Entrance Columns . . . . . 6-86
6.A.1.2.3 Guide Beam Supports . . . . . 6-86
6.A.1.2.4 Enclosure Structure . . . . . 6-86

6.A.1.3 Door Sealing System. . . . . 6-87

6.A.1.4 Door and Bridge Controls . . . . . 6-88

6.A.1.4.1 Electrical Control Panel . . . . . 6-88
6.A.1.4.2 Pneumatic Control Panel. . . . . 6-89

6.A.2 Cushions at Steel-Concrete Interfaces . . . . . 6-89

6.A.3 Dome Platform and Access Ladder . . . . . 6-90

APPENDIX 6-B - CONTAINMENT STRUCTURAL STRESS ANALYSIS. . . . . 6-93

6.B.1 Facility Description. . . . . 6-93

6.B.2 Stress Analysis. . . . . 6-93

6.B.2.1 Design Loads . . . . . 6-93
6.B.2.2 Design of Major Components . . . . . 6-94

6.B.2.2.1 Basic Shell Design Remote from Floor. . . . . 6-94
6.B.2.2.2 Top Head and Crane Girder . . . . . 6-95
6.B.2.2.3 Bottom Head and Reinforcing Ring . . . . . 6-96
6.B.2.2.4 Railroad Door . . . . . 6-96
6.B.2.2.5 Railroad Door Frame and Transition Regions . 6-97
6.B.2.2.6 Circumferential Rings . . . . . 6-98
6.B.2.2.7 Nozzles . . . . . 6-98

6.B.2.2.8 Airlocks . . . . . 6-99
6.B.2.2.9 Brackets . . . . . 6-100
6.B.2.2.10 Nozzle End Plates . . . . . 6-100
6.B.2.2.11 Membrane Attachment Ring . . . . . 6-100

6.B.3 Reference . . . . . 6-101

APPENDIX 6-C - QUALITY ASSURANCE . . . . . 6-107

6.C.1 General . . . . . 6-107

6.C.2 Construction Practices and Quality Assurance . . . . . 6-107

6.C.2.1 Government . . . . . 6-107
6.C.2.2 Nongovernment . . . . . 6-107

6.C.2.2.1 Specifications (ANC LOFT Program) . . . . . 6-107
6.C.2.2.2 Standards . . . . . 6-107

6.C.3 Quality Assurance Program . . . . . 6-109

6.C.4 Materials . . . . . 6-110

6.C.4.1 Record of Materials Used . . . . . 6-110
6.C.4.2 Pressure- and Temperature-Stressed Materials . . . . . 6-110
6.C.4.3 Non-Pressure- and Temperature-Stressed Materials . . . 6-111
6.C.4.4 Weld Filler Materials . . . . . 6-111
6.C.4.5 Elastomers . . . . . 6-112

6.C.5 Fabrication . . . . . 6-112

6.C.5.1 Fabrication of ASME Code Components . . . . . 6-112

6.C.5.1.1 Tolerances . . . . . 6-114
6.C.5.1.2 Welded Joints . . . . . 6-114
6.C.5.1.3 Postweld Heat Treatment . . . . . 6-114

6.C.5.2 Erection Submittals . . . . . 6-114

6.C.6 Vendor ASME Code Inspection . . . . . 6-115

6.C.7 Acceptance Tests . . . . . 6-116

6.C.8 Proof and Leak Tests . . . . . 6-116

6.C.9 Reference . . . . . 6-116

APPENDIX 6-D - LOFT LEAK RATE CRITERIA AND LEAK TESTING PROGRAM FOR LOFT CONTAINMENT VESSEL . . . . 6-117

6.D.1 Background . . . . . 6-117

6.D.2 Leakage Rate . . . . . 6-118

6.D.3 LOFT Leak Test Program . . . . . 6-119

6.D.3.1 Acceptance Tests. . . . . 6-119

6.D.3.1.1 Bare Vessel Tests . . . . . 6-119
6.D.3.1.2 Completed Facility. . . . . 6-120

6.D.3.2 Leak Rate Verification Tests. . . . . 6-121

6.D.4 Leakage Rate Testing Equipment . . . . . 6-123

6.D.5 References. . . . . 6-123

APPENDIX 6-E - LOCE CONTAINMENT RESPONSE . . . . . 6-127

6.E.1 Analysis Cases . . . . . 6-127

6.E.2 Assumptions and Methods . . . . . 6-129

6.E.3 Results . . . . . 6-129

## FIGURES

6-1. Containment vessel view from south looking north . . . . . 6-58

6-2. Containment vessel section A-A . . . . . 6-59

6-3. Locomotive and MTA maximum wheel loading (based on 778-ton MTA) . . . . . 6-60

6-4. Test chamber pipe penetrations (Type 1) . . . . . 6-61

6-5. Test chamber pipe penetrations (Type 2) . . . . . 6-62

6-6. Basement area pipe penetration . . . . . 6-63

6-7. Floor membrane pipe penetration . . . . . 6-64

6-8. Typical H&V penetration . . . . . 6-65

6-9. Typical electrical penetration flange . . . . . 6-66

6-10. Typical electrical penetration mounting (inboard). . . . . 6-67

6-11. Typical conductor module assembly-contact pin seal . . . . . 6-68

6-12. Pressure reduction spray system piping and instrument diagram . . . . . 6-69

6-13. Containment heating and ventilating system flow diagram . . . . . 6-70

6-14. Circular crane. . . . . 6-71

6-15. Leak test system piping and instrument diagram . . . . . 6-72

6-16. Elevation of leak test instrumentation in containment vessel . . . 6-73

6-17. Containment personnel airlocks system . . . . . 6-74

6-18. TV system layout. . . . . 6-75

6-A-1. Containment railroad door bridge . . . . . 6-91

6-B-1. Top head and crane girder. . . . . 6-102

6-B-2. Bottom head and reinforcing ring . . . . . 6-102

6-B-3. Railroad door. . . . . 6-103

6-B-4. Railroad door frame and transition . . . . . 6-104

6-B-5. Typical upper box girder segment. . . . . 6-105

6-B-6. Typical bracket . . . . . 6-105

6-B-7. Nozzle end plate and blind flange . . . . . 6-106

6-B-8. Membrane attachment ring . . . . . 6-106

6-E-1. LOCE CONTEMPT analysis Case 1. . . . . 6-130

6-E-2. LOCE CONTEMPT analysis Case 1 -- expanded time scale. . . . 6-131

6-E-3. LOCE CONTEMPT analysis Case 1. . . . . 6-132

6-E-4. LOCE CONTEMPT analysis Case 2 -- expanded time scale. . . . 6-133

6-E-5. LOCE CONTEMPT analysis Case 3. . . . . 6-134

6-E-6. LOCE CONTEMPT analysis Case 3 -- expanded time scale. . . . 6-135

6-E-7. LOCE CONTEMPT analysis Case 4. . . . . 6-136

6-E-8. LOCE CONTEMPT analysis Case 4 -- expanded time scale. . . . 6-137

TABLES

6-I. Equipment Loads . . . . . 6-7

6-II. Isolation Valve Information -- Type I Valves. . . . . 6-20

6-III. Isolation Valve Information -- Type II Valves . . . . . 6-21

6-IV. Isolation Valve Information -- Type III Valves . . . . . 6-25

6-V. Isolation Valve Information -- Type IV Valves . . . . . 6-27

6-VI. Isolation Valve Information -- Type V Valves . . . . . 6-29

6-D-I. Bare Vessel Acceptance Tests . . . . . 6-120

6-D-II. Completed Vessel Acceptance Tests . . . . . 6-121

6-D-III. Containment Verification Test . . . . . 6-121

6-D-IV. Containment Component Leak Tests . . . . . 6-122

6-D-V. Containment Leak Rate Instruments . . . . . 6-124

6-E-I. Containment Response Analysis . . . . . 6-128

## 6.0 CONTAINMENT FACILITY

The containment facility for the LOFT Integral Test System consists of:

(1) The containment vessel, which will contain the energy and material that could be released during a planned experiment or in the event of an accident

(2) The ESFs associated with containing fission products within the containment vessel bounds, which will limit the radioactivity released to the environment during the planned experiments or in the event of an accident.

Since the ESFs are described in Section 7.0, they will be discussed in this section only to the extent that they directly relate to the containment structure design. This section and its related appendixes (6-A through 6-E) cover, principally, the design of the containment vessel. The remainder of the support facilities are covered in Section 8.0.

In this section the containment vessel structure and the containment systems are described; drawings are included to show the principal dimensions and typical details of the containment vessel. The loading conditions for which the structures are designed are developed, and the containment performance test requirements are established.

In the appendixes to this section, the procedures for structural design and analysis are established, and other specific aspects of containment are described. While the discussion is directed to the containment vessel, the other critical structures are defined, and the same design procedures and material and construction standards will apply where applicable. Included are:

(1) Appendix 6-A, "Containment Mechanical Design and Analysis" - This appendix gives a detailed description of the mechanical equipment associated with the containment vessel. The equipment covered includes the railroad door structure, the railroad door sealing system, and the railroad door opening and closing mechanisms.

(2) Appendix 6-B, "Containment Structural Stress Analysis" - This appendix gives a detailed description and the results of the stress analysis that has been performed on the containment vessel.

(3) Appendix 6-C, "Quality Assurance"-This appendix describes the standards for the various structural materials to assure quality and the program of testing and inspection to verify quality.

(4) Appendix 6-D, "Leak Rate Criteria and Leak Testing Program for LOFT Containment Vessel" - This appendix describes the leak rate test program to demonstrate the integrity of the containment vessel and the instrumentation provided to monitor the leakage rate tests.

(5) Appendix 6-E, "LOCE Containment Response" - This appendix describes the containment pressure and temperature response under containment blowdown conditions. This analysis scopes the containment atmosphere conditions that could exist during the limited number of potential containment blowdown LOCE conditions.

## 6.1 Containment Facility

### 6.1.1 Design Basis and Criteria

The containment facility provides a barrier to prevent significant leakage of radioactive materials into the surrounding environment as a result of experiments or operating incidents. In addition, the facility provides a weathertight housing for the LOFT MTA. The containment vessel is a Class B vessel as specified in Section III of the ASME Boiler and Pressure Vessel Code (see Section 6.1.5). The facility construction will meet the QA requirements of the appropriate paragraphs and sections of Section III of the ASME Code (see Section 6.1.5).

A movable door with inflatable seals is provided to permit movement of the MTA into and out of the test chamber. Two personnel airlocks are provided, one into the test chamber and one into the basement area. Additional penetrations are provided for electrical, piping, and instrumentation systems.

### 6.1.2 General Description

The containment vessel[1,2,3,4] is a 70-ft-ID vertical cylinder with a hemispherical top head and a torospherical bottom head. A gastight membrane separates the test chamber portion of the containment vessel from the basement portion, which houses waste sumps and support equipment. The test chamber houses

the MTA (reactor system components mounted on a 32-wheel dolly on a four-rail track system), a circular crane, and other support equipment. A 33-ft-high-by-22-ft-wide opening in the containment vessel is provided to allow the MTA to be transferred from and to the reactor assembly area and hot shop disassembly area. This opening is closed and sealed with a railroad door during reactor operations and the conduct of LOCEs.

The containment vessel and railroad door are designed to ensure that an acceptable upper limit of leakage of radioactive material will not be exceeded during the conduct of a planned experiment or in the event of an accident as described in Section 16.8. Most experiments will discharge the primary coolant effluent into the blowdown suppression tank located on the containment vessel test chamber floor. Thus, two leakage barriers will exist during most LOFT LOCEs, viz, the blowdown suppression tank and the containment vessel.

The 70-ft-ID vertical cylinder was designed with a nominal wall thickness of 1-3/16 in. (as shown in Figures 6-1 and 6-2). A hemispherical top head, 5/8 in. thick, crowns the cylinder, with an inside dimension from the operating floor to the top head summit of 97 ft. The bottom head is a torospherical cap, 7/8 in. thick, with 32 ft between the operating floor and the inside surface of the apex. A steel reinforcing ring encircles the bottom head at the knuckle portion of the cap, which has a knuckle radius of 4 ft 6 in. Below the knuckle is the spherical cap, having an inside radius of 70 ft.

The MTA is brought into the containment vessel through the railroad access opening in the cylindrical shell. Once the MTA is inside, the vessel is closed with a box-section door reinforced with a steel plate gridwork. The primary purpose of this door is to provide a gastight sealed access which will contain the interior environment.

The door is subjected to loads due to pressure and temperature which are transferred by the outer door corner plates to four contact points on the door clamps. These clamps, whose primary purpose is door support, transfer such loads to the box section

reinforcing which surrounds the door opening. The box section reinforcing transfers the loads to the vessel shell. Owing to the large magnitude of these forces, a means was devised for a gradual transition from the frame to the shell. Box section circumferential rings were incorporated at the top and bottom of the frame with trapazoidal sections making the transition between the rings and the frame. Also, triangular gusset plates were placed both inside and outside the shell completely around the frame periphery.

Double-sealed-type nozzles pierce the vessel shell to provide for electrical instrumentation and HV penetrations. Each piping penetration is welded to the nozzles with a full penetration weld. Two airlocks also penetrate the cylindrical shell. One opens directly into the test chamber, and the other leads into the basement area. Brackets are attached to the shell interior for support of various hangers and instrumentation.

A steel membrane, embedded in concrete, divides the interior of the containment vessel into two spaces. This gastight membrane isolates the basement areas from the test chamber temperature and pressure.

For the support of a 50-ton-capacity polar crane, a circumferential box girder and crane support rail is provided at an elevation of 60 ft 10 in. above the operating floor.

A reinforced concrete slab that is step-formed to the shape of the bottom head supports the steel containment vessel. The slab rests partly on drilled concrete piers spaced around its periphery and extending to, and embedded a short distance into, the sound lava on which they bear. In order to ensure complete contact between the bottom head of the vessel and the dished slab, a layer of grout is forced into the space between the two surfaces.

A cushion of elastic materials is interposed between the containment vessel shell and the surrounding concrete where the shell leaves the concrete so that a smooth transition of the vessel from a fixed condition to a free condition may occur. An annular space around the steel containment vessel is formed in the concrete

foundation to provide access to the outside of the vessel down to the 4772-ft-8-in. elevation.

The containment vessel structural foundations are tied into the foundations of the adjoining structures by grade beams. The foundation slab is extended at the containment vessel railroad door to include the area of the door frame and to provide support for the railroad door bridge, the railroad door enclosure, and the apron. Expansion material and air spaces between the vessel shell and the concrete enables the door frame to deflect without distorting the concrete.

The total free volume of the containment vessel, with the concrete in place but without the equipment installed, is approximately 360,000 cu ft. The test chamber portion of the vessel, including the sumps vented to the test chamber, the MTA, the blowdown suppression equipment, and other operating equipment, has a free volume of approximately 322,000 cu ft. The basement portion has a free volume of approximately 24,000 cu ft with all the equipment installed.

### 6.1.3 Design Loads

The containment vessel is designed for all credible conditions of loading including normal loads, loads during a LOCA, test loads, and loads due to adverse environmental conditions. The following loadings and environmental conditions were used, which satisfies the intent of Criteria 2, 4, 16, and 50 as presented in Appendix 1-A:

(1) The loadings caused by the pressure and temperature transients during the conduct of the experimental program and during the postulated LOCA
(2) Test pressure
(3) Dead and live loads
(4) Operating temperature gradient
(5) Loads imposed by pipe rupture
(6) External pressure
(7) Wind and snow loads
(8) Earthquake
(9) Tornado.

6.1.3.1 Experiments and Postulated Accident Conditions

The containment vessel is designed, fabricated, and tested to ensure that the completed vessel leaktightness does not result in an unacceptable fission product released during planned operation or during a spectrum of postulated accident conditions. The design conditions used to calculate the maximum offsite radiological consequences are the postulated LOCA where a double-ended pipe break in the primary coolant system produces pressures and temperatures that are influenced by the ESF, heat sinks, and energy sources as described in Section 15.3.6.

6.1.3.2 Energy and Mass Releases

Energy and mass will be available for release into the containment vessel from (a) stored heat in the reactor core, (b) reactor decay heat (including initial transient during accident), and (c) stored heat in the primary coolant system (metal and liquid). The energy released from these three sources is discussed in Section 15.3.6.4.3.

6.1.3.3 Dead and Live Loads

The dead-load contribution is from the steel construction material used for the containment vessel and from equipment located in the containment vessel. The equipment loads are indicated in Table 6-I.

Live loads for the floors were designed consistent with the intended use and include appropriate allowances for suspended loads.

6.1.3.4 Design Temperatures

The following temperatures were used in the design of the containment vessel:

| | | |
|---|---|---|
| (1) | Maximum summer ambient: | 102°F |
| (2) | Minimum winter ambient: | -41°F |
| (3) | Minimum service metal temperature: | -20°F |

TABLE 6-I

EQUIPMENT LOADS

| Item | Location | Load |
|---|---|---|
| 1. | Overhead crane, two wheels at each end 10 ft apart, maximum load at one end | 117,200 lb/wheel |
| 2. | Overhead crane, two wheels at each end 10 ft apart, maximum load at one end (during 40-psig pressure application) | 58,600 lb/wheel |
| 3. | Platform-mounted alarm siren | 500 lb |
| 4. | Airlocks floor loading | 200 psf |
| 5. | Locomotive and MTA static wheel loads | As shown in Figure 6-3 (impact not included) |

(4) Maximum design internal atmosphere temperature: 260°F

(5) Minimum temperature in all enclosed exterior annular spaces above- and below-grade: 50°F.

6.1.3.5 Design Pressures

The following pressures were used for the design of the containment facility:

(1) Design positive pressure in containment vessel and airlocks (psig):

(a) Maximum containment internal pressure (paragraph N-1311, ASME Code, Section III) 40

(b) Operating pressure (Figure N-414, ASME Code, Section III) 40

(c) Design internal pressure (paragraph N-1312, ASME Code, Section III, 90% of 40 psig, and Figure N-414, ASME Code, Section III) 36

(2) Pneumatic prooftest pressure in containment vessel and airlocks (paragraph N-1314 (d), ASME Code, Section III, 125% of 36 psig) 45 psig

(3) Design negative pressure (psig):

| | | |
|---|---|---|
| (a) | Containment vessel | 0.5 |
| (b) | Airlocks portion inside test chamber | |
| | Design | 36 |
| | Maximum | 40 |
| | Test | 45 |
| (c) | Airlocks exterior to test chamber | 0.5 |

(4) Atmospheric pressure (psia) 12.3

6.1.3.6 Wind

The wind loadings used in the design of the containment vessel are as follows (psf): (a) 0 to 30 ft abovegrade - 30, (b) 30 to 50 ft abovegrade - 35, (c) 50 to 75 ft abovegrade - 40, and (d) 75 to 100 ft abovegrade - 45.

6.1.3.7. Snow Loading

The snow or ice loading on the projected area of the containment vessel used in the design is 30 psf.

6.1.3.8 Earthquake

The containment vessel has been analyzed using equivalent static loads in accordance with UBC, Zone 2, as was required at the time of the vessel construction. The static loads which were considered consisted of a peak horizontal acceleration of 0.05 g and a vertical acceleration equal to one-half of the horizontal acceleration. Both vertical and horizontal loads were assumed to be applied simultaneously. Since the above analysis has been performed and the vessel has been constructed, the UBC zoning classification for the area has been changed to Zone 3.

6.1.3.9 Tornado

The containment vessel has been designed to withstand a tornado with an equivalent wind loading in excess of a 160-mph wind (see Section 3.7.4).

### 6.1.4 Design Leakage Rate

The containment vessel is designed to have a maximum leakage rate of 0.2 wt% of dry air at 36 psig in a 24-hr period. This leakage rate satisfies Criterion 50 as presented in Appendix 1-A. Leakage rate tests will be conducted on the containment vessel pressure boundary and its components, including the isolation valves, in accordance with the requirements of 10 CFR Part 50, Appendix J (see Appendix 6-D).

### 6.1.5 Codes and Standards

Applicable provisions, both mandatory and recommended, of the following codes and standards were used in the design of the facility. These codes and standards used during the construction of the containment vessel satisfy the intent of Criterion 1 in Appendix 1-A.

#### 6.1.5.1 Government - AEC

(1) ID Standard Health and Safety Requirements, IDO-12028

(2) Health and Safety Design Criteria Manual, IDO-12044 (October 1965).

(3) Design Criteria, Part 6300 of Volume 6000 AEC Manual, Appendix K (1963) as modified by Engineering Standards for U.S. Atomic Energy Commission, Idaho Operations Office (1966)

(4) 10 CFR Part 50, Appendix J, "Reactor Containment Leakage Testing for Water Cooled Power Reactors" (February 14, 1973).

#### 6.1.5.2 Nongovernment

(1) American Society of Mechanical Engineers (ASME)

(a) Boiler and Pressure Vessel Code, Section II, "Material Specifications", 1965 edition

(b) Boiler and Pressure Vessel Code, Section III, "Rules for Construction of Nuclear Vessels", 1965 edition (including addenda through the Summer 1966 issue)

(c) Boiler and Pressure Vessel Code, Section VIII, "Unfired Pressure Vessels", 1965 edition

(d) Boiler and Pressure Vessel Code, Section IX, "Welding Qualifications", 1965 edition

(e) Interpretations of the ASME Boiler and Pressure Vessel Code pertaining to Section III through August 1966

(2) International Conference of Building Officials

Uniform Building Code, Volume 1, 1964 and 1970 editions

(3) American Society for Testing Materials (ASTM)

Applicable portions of 1966 edition and ASTM-20 and A-516, 1967 edition

(4) American National Standards Institute (ANSI)

(a) B-16.5 - 1961 edition, "Steel Pipe Flanges and Flanged Fittings"

(b) B-31.3 - 1964 edition with Addenda, B-31.3A, "Code for Pressure Piping"

(c) N-45.4 - "Leakage Rate Testing of Containment Structures for Nuclear Reactors" (March 16, 1972)

(5) American Institute of Steel Construction (AISC)

"Specifications for the Design, Fabrication and Erection of Structural Steel for Buildings", 6th edition (1963)

(6) American Concrete Institute (ACI)

318-63 - "Building Code Requirements for Reinforced Concrete"

(7) American Welding Society (AWS)

B-1.0 - "Standard Code for Arc and Gas Welding for Building Construction" (1965)

(8) Instrument Society of America (ISA)

"Standards and Practices for Instrumentation", 1963 edition

(9) American Railway Engineering Association (AREA)

AREA standards Volumes 1 and 2

(10) American Railway Association (ARA)
ARA standards

(11) American Gear Manufacturers Association (AGMA)
AGMA 210 series (Surface Durability), AGMA 220 series (Rate of Strength), AGMA 400 series (Standard Practice)

(12) American Bearing Manufacturers Association (ABMA)
ABMA standards

(13) Joint Industry Conference (JIC)
"Standards for Pneumatic Equipment"

(14) National Electrical Manufacturers Association (NEMA)
MG-1-1967 (Motors), IC-4-1958 (Enclosures), WC-3-1969 (Wire), WC-5-1968 (Wire), IC-1-1966 (Switches, Relays, and Terminal Blocks)

(15) Steel Structures Painting Council (SSPC)
SP-3 - "Power Tool Cleaning"

(16) National Fire Protection Association (NFPA)
Bulletin 70, 1964-65 edition.

### 6.1.6 Penetrations

#### 6.1.6.1 Piping, Duct, and Electrical Penetrations[5,6]

Penetrations for process piping, ventilation ducts, instrumentation lines, and electrical cables are designed to withstand the following loads:

(1) Incident pressure and temperature due to the conduct of a LOCE or LOCA

(2) Pipe reactions based on thermal flexibility and seismic loads

(3) Expansion of containment shell under LOCE or LOCA conditions

(4) Pipe thrust loads to ensure that the pressure barrier is not breeched owing to the rupture of any piping system.

The piping is welded to the nozzles with a full penetration weld as is shown in Figures 6-4 through 6-7.

Ventilating penetrations are sealed with two valves in series outside the containment vessel. A typical ventilation penetration is shown in Figure 6-8. The electrical and instrumentation penetrations have (a) a doubled mechanical seal where the penetration penetrates the containment vessel, and (b) two electrical connectors in series for each cable penetrating the penetration bulkhead as is shown in Figures 6-9 and 6-10. Each electrical connector is sealed to prevent the leakage of gases past the electrical penetration connector as is shown in Figure 6-11. Each electrical penetration assembly is designed and tested to have a leaktightness of $10^{-6}$ scc/sec of dry helium. The completed penetration assembly, after installation in the containment nozzles, has been tested to have a leakage no greater than $10^{-2}$ scc/sec of dry nitrogen.

Electrical and ventilation penetrations are designed to provide a captive air space that can be leak-tested, which satisfies the intent of Criterion 54 as presented in Appendix 1-A.

6.1.6.2 Personnel Access Airlocks

Two personnel access airlocks[7] and one emergency escape route are provided as follows: (a) one penetrates the containment vessel into the test chamber, (b) another penetrates the containment vessel into the basement, and (c) the emergency escape route penetrates the membrane separating the test chamber and basement.

Each personnel access airlock is a welded-steel assembly with double doors. Each of the airlock doors is equipped with an elastomer seal which will minimize the containment leakage from the airlocks during either LOCE or LOCA conditions. To ensure that the leakage into or out of the airlocks is within the allowable specification, leak tests on the airlocks will be performed in accordance with the guidelines established in 10 CFR Part 50, Appendix J (see Appendix 6-D).

The allowable leak rate for the test chamber and basement airlocks has been established to ensure that the total leakage from the containment vessel is within the specified leak rate (see Section 6.1.4). During controlled containment access, the double doors on each airlock are interlocked to ensure that only one door is open at a time. Remote indicating lights are provided in the control room to indicate if a door is open or locked shut.

The membrane escape route consists of a submarine-type airlock with manual controls.

6.1.6.3 Railroad Access Door

An access opening for the railroad dolly-mounted MTA is provided in the containment vessel. This opening is covered by a railroad door[8], which is a gastight steel box reinforced with a steel plate gridwork measuring 39 ft 5 in. high by 39 ft wide by 4 ft 6 in. thick. Its purpose is to close and seal the MTA access opening in the containment vessel. A manually operated, pneumatic, double door seal system is provided to maintain the integrity of the vessel during reactor operation LOCEs.

In order that the door may be moved aside from the vessel opening, an electrically operated transport system is provided. The door travels in a circumferential arc partially encompassing the vessel on a rail support system.

A rail system bridge is attached by a towbar to the west end of the door structure on a similar support system, and its movement is controlled by the door motion. When the door is in the open position, the bridge is centered at the vessel access opening, providing a rail connection for moving the MTA into and out of the test chamber.

A more detailed description of the mechanical design of the railroad door and associated equipment is given in Appendix 6-A.

### 6.1.7 Shielding[9]

The containment vessel completely encloses the primary coolant system and is designed to contain the blowdown effluent and any radioactive material which might be released following a LOCE or a hypothetical LOCA. Adequate biological shielding is provided to protect the operating personnel during an accident, a planned test, and normal operating conditions. The radiological safety protection guidelines used for the protection of personnel in controlled areas are set forth in AEC Manual Chapter 0524 and Health and Safety Design Criteria Manual, IDO-12044. A discussion of the specific shielding design is given in Section 13.2.

### 6.1.8 Vacuum Relief

The vacuum relief system is designed to minimize any negative pressure differential which may exist between the containment and the outside environment to ensure that resultant stresses are below the design stress of the containment vessel. The relief system is designed to open when a 0.5-psi negative differential pressure exists. During operations, a vacuum in the vessel may result from changes in atmospheric conditions or from subcooling the vessel during isolation conditions.

The vacuum relief system consists of redundant relief paths. Each of the relief paths consists of two 12-in.-diameter, balanced, self-actuating, horizontally installed relief valves mounted in series. A 1/2-in. plugged pipe coupling to the atmosphere is located between each set of the two valves to provide for connection of leak detection equipment when desired. All of the valves are serviceable from the outside of the containment vessel and are located 5 ft above the operating floor. Other equipment (flanges, couplings, etc.) is provided for testing the valve capabilities during the vessel life as may be required. The valves were certified in accordance with paragraph N-1611 of ASME Code, Section III.

The vacuum relief valves are located outside the containment vessel in the railroad bridge enclosure. The design of this enclosure requires that this area be maintained at a temperature greater than 40°F by a unit heater. Because one of the walls

of this heated enclosure is the containment vessel, ice (which could hamper the vacuum relief valve operation) will not form on the inside of the containment vessel wall or in the vacuum relief valves.

## 6.2 Containment Isolation System

### 6.2.1 Design Basis

The general basis governing isolation valve requirements is that leakage through all piping and HV penetrations not serving accident-consequence-limiting systems is to be minimized by a double barrier so that no single, credible failure or malfunction of an active component can result in loss of isolation or intolerable leakage. The installed double barriers take the form of closed piping systems, both inside and outside the containment vessel, and various types of isolation valves.

Each system whose piping penetrates the containment leakage-limiting boundary is designed to maintain or establish isolation of the containment from the outside environment under conditions of any accident for which isolation is required. In addition, the isolation system is designed to effect containment isolation with an independent single failure or malfunction occurring in any active system or component within the isolation system in coincidence with an isolation signal.

The containment isolation system (CIS) [10], including the instrumentation and valves, is part of the overall PPS and is designed, fabricated, and maintained to meet the requirements specified in RDT Standard C 16-1T.

The specific design bases governing the CIS as an ESF (see Section 7.0) are discussed below.

#### 6.2.1.1 Accident Conditions

The CIS, in conjunction with other plant protection subsystems and passive plant structures, is designed, fabricated, tested, and maintained to minimize the radiation exposure of the general public for all accidents; in no case will the exposure exceed the radiation

exposure guidelines established in 10 CFR Part 100 at the site boundary. Activity calculations are based on $10^4$ meters, which is considered to be closest site boundary.

6.2.1.2 Normal Operation

The CIS, in conjunction with other plant protection subsystems and passive structures, will limit the release of radioactivity resulting from normal performance of the planned experiments or abnormal condition up to and including the severity level of a major incident to be within the radiation exposure guidelines established in AEC Manual Chapter 0524.

Piping penetrating the containment is designed for pressures equal to or higher than the containment maximum operating pressure. Containment isolation valves are provided as necessary in lines penetrating the containment to assure that no unrestricted release of radioactivity can occur. Such a release might be due to (a) rupture of a line within the containment concurrent with a LOCA or (b) rupture of a line outside the containment which connects to a source of radioactive fluid within the containment.

In general, isolation of a line outside the containment protects against rupture of the line inside concurrent with a LOCA or closes off a line which communicates with the containment atmosphere in the event of a LOCA.

Isolation of a line inside the containment prevents flow from the primary coolant system or any other source of radioactive fluid in the event that a piping rupture occurs outside the containment. A piping rupture outside the containment up to the last isolation valve at the same time as a LOCA is not considered credible since the penetrating lines are of the same quality as the containment, up to and including the second isolation barrier, and are assumed to be an extension of the containment.

The isolation valve arrangement provides two barriers between the primary coolant system or containment atmosphere and the environment to satisfy the intent of Criterion 4 presented in Appendix 1-A.

Automatic isolation is initiated by a containment isolation signal derived from a coincident low pressurizer level and a low primary coolant pressure, from a high containment pressure signal (3 psig), or from high pressure in the suppression tank. The same parameters used to initiate containment isolation also are used to initiate the ECCS. In addition, all automatic containment isolation valves, upon loss of actuating power, fail closed except those required for ESFs.

In addition to satisfying containment isolation criteria, the valving is designed to facilitate normal operation and maintenance of the systems. All remotely operated containment vessel isolation valves are provided with position limit indicators in the control room. The isolation valves described in this section satisfy the intent of Criteria 55, 56, and 57 in Appendix 1-A.

### 6.2.2 System Design and Evaluation

The fluid penetrations which require isolation after an accident may be classed as follows:

(1) Type I - Each line connecting directly to the primary coolant system and used during normal reactor operations has two containment vessel isolation valves which are remotely operated. One valve is inside the containment boundary, and the other valve is outside. If the normal direction of flow is into the containment, one of the two valves may be a check valve located inside the containment vessel. All remotely operated valves are automatically actuated by the CIS.

(2) Type II - Each line connecting directly to the containment vessel atmosphere and used during normal reactor operations has two isolation valves which are remotely operated.

One valve is located inside the containment boundary, and the other is located outside except for the containment HV piping, which has both valves located outside the containment vessel. (See discussion below.) If the normal direction of flow is into the containment vessel, one of the two valves may be a check valve located inside the containment vessel. Valves are automatically actuated by the CIS.

(3) Type III - Each line not directly connected to the primary coolant system or open to the containment vessel atmosphere has at least one isolation valve, either a locked-closed manual valve or a remotely operated valve. This valve is located outside the containment vessel. These lines are considered to be an essential service system; hence, they are not automatically actuated by the containment isolation signal.

(4) Type IV - Lines which penetrate the containment vessel and are connected to either the vessel atmosphere or the primary coolant system, but which are not normally open during reactor operation, may have either (a) two manual valves with provisions for locking in a closed position or (b) blind flanges in place of either or both of the manual valves. One of the valves is located inside the containment vessel and the other outside except for the containment HV piping, which has both valves located outside the containment. (See discussion below.) These valves are not connected to the CIS.

(5) Type V - Lines serving ESFs have two isolation valves which are operated automatically by the ECC injection signal or remotely from the control room; hence, they are not automatically actuated by the containment isolation signal. One of these remotely operated valves is located inside the containment and the other outside. If the normal direction of flow is into the containment, one of the two valves may be a check valve located inside the containment.

Additionally, there are various arrangements in each of these major groups. The individual system flow diagrams show the manner in which each containment isolation valve arrangement fits into its respective system. For convenience each penetration is given in Tables 6-II through 6-VI, which list the mode of actuation, the types of valves, and their normal positions. The specific service of each line penetrating the containment is also presented. The valves are tested periodically between nuclear experiments to ensure their leaktightness and operability (see Appendix 6-D). All remotely controlled valves can be operated from the reactor control room, where status lights indicate whether the valves are open or closed. This capability for functionally testing the isolation valves satisfies the intent of Criterion 55 as presented in Appendix 1-A.

Containment isolation valves are provided with actuation and control equipment appropriate to the valve type. For example, air-operated globe and diaphragm valves are generally equipped with air-diaphragm operators with fail-safe operation assured by backup air from storage tanks.

Nonautomatic isolation valves (Type III), i.e., remote stop valves and manual valves, are used in lines which must remain in service or whose isolation could cause a plant transient or shutdown, at least for a time, following an accident. These are closed manually, if and when the lines are taken out of service. Standard closing times available with commercial valve models are adequate for the sizes of containment isolation valves used. Valves equipped with air-diaphragm operators generally close in approximately 2 sec after the initiation signal is received.

The HV isolation valves deviate from the Type II and Type IV requirements in that the redundant valves on each penetrating line are both located outside the containment vessel rather than having one valve outside and the other valve inside. The exception to the isolation valving requirements for the HV valves was made for the following reasons:

## TABLE 6-II

## ISOLATION VALVE INFORMATION -- TYPE I VALVES

| Item | Penetration No. | Valve No. | Service | Flow Direction | Location (Ref CV) | Valve Type | Line Size (in.) | Normal Position | Power Fail Position | Position Indication | Post-accident Position |
|---|---|---|---|---|---|---|---|---|---|---|---|
| 1. | S-5D | V3009-CU | Primary coolant sample line | In | Inside | Swing check | 1/2 | N/A | N/A | No | N/A |
| 2. | S-5D | CV-P136-2 | Primary coolant sample line | Out | Inside | Globe | 1/2 | Open | Closed | Yes | Closed[a] |
| 3. | S-5B | CV-P136-12 | Primary coolant sample line | Out | Inside | Globe | 1/2 | Closed | Closed | Yes | Closed[a] |
| 4. | S-5B | CV-P136-21 | Primary coolant sample line | Out | Inside | Globe | 1/2 | Closed | Closed | Yes | Closed[a] |
| 5. | S-5D | CV-P136-8 | Primary coolant sample line | In | Outside | Globe | 1/2 | Open | Closed | Yes | Closed[a] |
| 6. | S-5D | CV-P136-3 | Primary coolant sample line | Out | Outside | Globe | 1/2 | Open | Closed | Yes | Closed[a] |
| 7. | S-5B | CV-P136-13 | Primary coolant sample line | Out | Outside | Globe | 1/2 | Closed | Closed | Yes | Closed[a] |
| 8. | S-5B | CV-P136-22 | Primary coolant sample line | Out | Outside | Globe | 1/2 | Closed | Closed | Yes | Closed[a] |

[a] Closes automatically on containment isolation initiation.

## TABLE 6-III

## ISOLATION VALVE INFORMATION -- TYPE II VALVES

| Item | Penetration No. | Valve No. | Service | Flow Direction | Location (Rev CV) | Valve Type | Line Size (in.) | Normal Position | Power Fail Position | Position Indication | Post-accident Position |
|---|---|---|---|---|---|---|---|---|---|---|---|
| 1. | S-12A | CV-HV-2-1<br>CV-HV-2-2 | H&V | In | Outside | Butter-fly (air) | 24 | Open | Closed | Yes | Closed[a] |
| 2. | S-11B | CV-HV-2-3<br>CV-HV-2-4 | H&V | In | Outside | Butter fly (air) | 12 | Open | Closed | Yes | Closed[a] |
| 3. | S-11A | CV-HV-2-5<br>CV-HV-2-6 | H&V | Out | Outside | Butter fly (air) | 12 | Open | Closed | Yes | Closed[a] |
| 4. | S-13C | CV-HV-2-7<br>CV-HV-2-8 | H&V | Out | Outside | Butter-fly (air) | 24 | Open | Closed | Yes | Closed[a] |
| 5. | S-13B | CV-HV-2-9<br>CV-HV-2-10 | H&V | In | Outside | Butter-fly | 24 | Open | Closed | Yes | Closed[a] |
| 6. | S-20C | CV-P125-11 | Test chamber ambient air | Out | Out | Dia-phragm weir | 1 | Open | Closed | Yes | Closed[a] |
| 7. | S-20A | CV-P125-12 | Water with air sample | Out | Out | Dia-phragm weir | 3/8 | Open | Closed | Yes | Closed[a] |
| 8. | S-20A | CV-P125-14 | Water with air sample | Out | Out | Dia-phragm weir | 3/8 | Open | Closed | Yes | Open[a] |
| 9. | S-20A | CV-P125-15 | Water with air sample | Out | Out | Dia-phragm weir | 3/8 | Open | Closed | Yes | Open |

TABLE 6-III (contd.)

| Item | Penetration No. | Valve No. | Service | Flow Direction | Location (Rev CV) | Valve Type | Line Size (in.) | Normal Position | Power Fail Position | Position Indication | Post-accident Position |
|---|---|---|---|---|---|---|---|---|---|---|---|
| 10. | S-20A | CV-P125-16 | Water with air sample | Out | Out | Dia-phragm weir | 3/8 | Open | Closed | Yes | Closed |
| 11. | S-20C | CV-P125-17 | Test chamber ambient air | Out | Out | Dia-phragm weir | 1 | Open | Closed | Yes | Closed |
| 12. | S-20B | CV-P125-18 | Water with air sample | Out | Out | Dia-phragm weir | 3/8 | Open | Closed | Yes | Open |
| 13. | S-20B | CV-P125-19 | Water with air sample | Out | Out | Dia-phragm weir | 3/8 | Open | Closed | Yes | Open |
| 14. | S-20B | CV-P125-22 | Basic thiosul-phate solution | In | Out | Seat globe | 1/2 | Open | Closed | Yes | Open |
| 15. | S-20A | CV-P125-23 | Basic thiosul-phate solution | In | Out | Seat globe | 1/2 | Open | Closed | Yes | Open |
| 16. | S-20A | CV-P125-24 | Basic thiosul-phate solution | In | Out | Seat globe | 1/2 | Open | Closed | Yes | Closed |
| 17. | S-20C | CV-P125-45 | Containment air | In | Out | Dia-phragm weir | 1 | Open | Closed | Yes | Closed |
| 18. | S-20A | V2370 CEE | Basic thiosul-phate solution | In | In | Check | 1/2 | N/A | N/A | No | N/A |
| 19. | S-20A | V2312 CEE | Basic thiosul-phate solution | In | In | Check | 1/2 | N/A | N/A | No | N/A |
| 20. | S-20B | V2313 CEE | Basic thiosul-phate solution | In | In | Check | 1/2 | N/A | N/A | No | N/A |

TABLE 6-III (contd.)

| Item | Penetration No. | Valve No. | Service | Flow Direction | Location (Rev CV) | Valve Type | Line Size (in.) | Normal Position | Power Fail Position | Position Indication | Post-accident Position |
|---|---|---|---|---|---|---|---|---|---|---|---|
| 21. | S-20C | V2314 CE | Vent to containment | In | In | Check | 1 | N/A | N/A | No | N/A |
| 22. | S-20A | CV-P138-35 | Blowdown sample | Out | Inside | Diaphragm | 1/2 | Closed | Closed | Yes | Closed |
| 23. | S-20A | CV-P138-38 | Blowdown sample | Out | Outside | Diaphragm | 1/2 | Closed | Closed | Yes | Closed |
| 24. | S-20B | CV-P138-36 | Blowdown tank drain and sample | Out | Inside | Diaphragm | 1/2 | Closed | Closed | Yes | Closed |
| 25. | S-20B | CV-P138-39 | Blowdown tank drain and sample | Out | Outside | Diaphragm | 1/2 | Closed | Closed | Yes | Closed |
| 26. | S-20B | CV-P138-37 | Blowdown IX liquid influent sample | Out | Inside | Diaphragm | 1/2 | Closed | Closed | Yes | Closed |
| 27. | S-20B | CV-P138-40 | Blowdown IX liquid influent sample | Out | Outside | Diaphragm | 1/2 | Closed | Closed | Yes | Closed |
| 28. | S-20B | CV-P138-29 | Blowdown IX liquid effluent sample | Out | Inside | Diaphragm | 1/2 | Closed | Closed | Yes | Closed |
| 29. | S-20B | CV-P138-41 | Blowdown IX liquid effluent sample | Out | Outside | Diaphragm | 1/2 | Closed | Closed | Yes | Closed |
| 30. | S-20A | CV-P125-9 | Water with air sample | Out | Outside | Diaphragm seal | 3/8 | Open | Closed | Yes | Open |
| 31. | S-20A | CV-P125-20 | Water with air sample | Out | Inside | Diaphragm seal | 3/8 | Open | Closed | Yes | Open |

TABLE 6-III (contd.)

| Item | Penetration No. | Valve No. | Service | Flow Direction | Location (Rev CV) | Valve Type | Line Size (in.) | Normal Position | Power Fail Position | Position Indication | Post-accident Position |
|---|---|---|---|---|---|---|---|---|---|---|---|
| 32. | S-20B | CV-P125-13 | Water with air sample | In | Outside | Globe | 1/2 | Open | Closed | Yes | Open |
| 33. | S-20B | V-2393-CEE | Water with air sample | In | Inside | Swing check | 3/8 | N/A | N/A | No | N/A |
| 34. | S-20C | CV-P138-50 | Blowdown tank drain and sample | Out | Inside | Globe | 1 | Closed | Closed | Yes | Closed |
| 35. | S-20C | CV-P138-54 | Blowdown tank drain and sample | Out | Outside | Globe | 1 | Closed | Closed | Yes | Closed |

[a] Closes automatically on containment isolation initiation.

## TABLE 6-IV

## ISOLATION VALVE INFORMATION -- TYPE III VALVES

| Item | Penetration No. | Valve No. | Service | Flow Direction | Location (Ref CV) | Valve Type | Line Size (in.) | Normal Position | Power Fail Position | Position Indication | Post-accident Position |
|---|---|---|---|---|---|---|---|---|---|---|---|
| 1. | S-6A | CV-P4-11 | Secondary main steam | Out | Outside | Globe[a] Code I (EMO) | 10 | Open | Closed | Yes | Open |
| 2. | S-7A | CV-P11-7 | Low-level radio-active waste | Out | Outside | Flex sleeve | 6 | Open | Open | Yes | Open |
| 3. | S-7A | CV-P11-61 | Low-level radio-active waste | In | Outside | Flex sleeve | 6 | Open | Open | Yes | Open |
| 4. | S-17B | CV-P11-58 CV-P11-59 | High-level waste | Out | Outside | Sleeve[a] (air) | 4 | Closed | Closed | Yes | Closed |
| 5. | S-2A | CV-P5-51 | Component cool-ant makeup | In | Outside | Globe | 3 | Open | Closed | Yes | Open |
| 6. | S-2A | CV-P6-35 | Industrial water | In | Outside | Globe | 4 | Open | Open | Yes | Open |
| 7. | S-5B | CV-P6-42 | Industrial water (hose pack) | In | Outside | Globe | 4 | Open | Open | Yes | Closed |
| 8. | S-5B | CV-P7-24 | Instrument air | In | Outside | Globe | 2 | Open | Closed | Yes | Open |
| 9. | S-2A | CV-P7-25 | Instrument air | In | Outside | Globe | 2 | Open | Closed | Yes | Open |
| 10. | S-1A | V-5053 | Component cooling | Out | Outside | Manual | 1 | Closed | N/A | N/A | Locked closed |
| 11. | S-1A | CV-P141-37 | Component cooling Pressurizer | In | Outside | Globe | 2 | Open | Open | Yes | Open |
| 12. | S-3E | V-2358 | Secondary coolant | Out | Outside | Manual globe | 1 | Closed | N/A | N/A | Locked closed |

TABLE 6-IV (contd.)

| Item | Penetration No. | Valve No. | Service | Flow Direction | Location (Ref CV) | Valve Type | Line Size (in.) | Normal Position | Power Fail Position | Position Indication | Post-accident Position |
|---|---|---|---|---|---|---|---|---|---|---|---|
| 13. | S-5E | CV-P4-70 | Secondary coolant | Out | Outside | Globe | 1/2 | Closed | Closed | Yes | Closed |
| 14. | S-5E | CV-P4-71 | Steam generator reference leg | In | Outside | Globe | 1/2 | Open | Closed | Yes | Open |
| 15. | S-5E | CV-P4-73 | Secondary coolant feedwater | In | Outside | Globe | 6 | Open | Open | Yes | Open |
| 16. | S-5D | CV-P4-74 | Auxiliary feedwater | In | Outside | Globe | 2 | Closed | Open | Yes | Closed |

[a] Administrative control.

TABLE 6-V

ISOLATION VALVE INFORMATION -- TYPE IV VALVES

| Item | Penetration No. | Valve No. | Service | Flow Direction | Location (Ref CV) | Valve Type | Line Size (in.) | Normal Position | Power Fail Position | Position Indication | Post-accident Position |
|---|---|---|---|---|---|---|---|---|---|---|---|
| 1. | S-5D | V-1379-LS<br>V-1748-LS | Steam supply | In | Outside | Manual globe | 2 | Locked closed | N/A | N/A | Locked closed |
| 2. | S-1A | V-1749-LS<br>V-1380-LS | Steam supply (basement) | In | Outside | Manual globe | 2 | Locked closed | N/A | N/A | Locked closed |
| 3. | S-1A | V-2236-LVF<br>V-2237-LVF | Decon Termination sump solution supply | In | Outside | Manual globe | 3 | Locked closed | N/A | N/A | Locked closed |
| 4. | S-2A | V-1544-YT | Leak rate test | Out | Outside | Manual globe | 1/4 | Locked closed | N/A | N/A | Locked closed |
| 5. | S-3F | V-1546-YT | Leak rate test | Out | Outside | Manual globe | 1/4 | Locked closed | N/A | N/A | Locked closed |
| 6. | S-3F | V-1542-YT | Leak rate test | Out | Outside | Manual globe | 1/4 | Locked closed | N/A | N/A | Locked closed |
| 7. | S-5C | V-2184-LE | Demineralized water (test chamber) | In | Outside | Manual globe | 3 | Closed (flanged) | N/A | N/A | Closed (flanged) |
| 8. | S-11C | V-2047-HE | Sump sampling | Out | Outside | Manual globe[a] | 1 | Closed | N/A | N/A | Closed |
| 9. | S-3F | V-1545-YT | Leak rate test | In | Outside | Manual globe | 1/4 | Locked closed | N/A | N/A | Locked closed |
| 10. | S-13D | CV-HV-2-14<br>CV-HV-2-15 | H&V | Out | Outside | Butterfly (air) | 24 | Closed | Closed | Yes | Locked closed |
| 11. | S-11D | CV-HV-2-12<br>CV-HV-2-13 | H&V | In | Outside | Butterfly (air) | 12 | Closed | Closed | Yes | Locked closed |

TABLE 6-V (contd.)

| Item | Penetration No. | Valve No. | Service | Flow Direction | Location (Ref CV) | Valve Type | Line Size (in.) | Normal Position | Power Fail Position | Position Indication | Post-accident Position |
|---|---|---|---|---|---|---|---|---|---|---|---|
| 12. | S-5F | CV-P128-105 | Addition and control | In | Outside | Globe (air) | 1½ | Closed | Closed | Yes | Closed |
| 13. | S-5A | CV-P128-109 | Addition and control | In | Outside | Globe (air) | 1½ | Closed | Closed | Yes | Closed |
| 14. | S-5B | V-2140-LS<br>V-2141-LS | Leak test pressurizer line | Out | Outside | Manual globe | 13 | Locked closed | N/A | N/A | Locked closed |

[a] Administrative control.

TABLE 6-VI

ISOLATION VALVE INFORMATION -- TYPE V VALVES

| Item | Penetration No. | Valve No. | Service | Flow Direction | Location (Ref CV) | Valve Type | Line Size (in.) | Normal Position | Power Fail Position | Position Indication | Post-accident Position |
|---|---|---|---|---|---|---|---|---|---|---|---|
| 1. | S-9A | V-2278-CVF | LPIS pump test | Out | Outside | Manual gate | 4 | Locked closed | N/A | N/A | Locked closed |
| | | V-2145-CVG | LPIS pump test | Out | Inside | Manual gate | 4 | Locked closed | N/A | N/A | Locked closed |
| | | CV-P120-98 | LPIS pump bypass | Out | Inside | Globe (air) | 2 | Open | Closed | Yes | Open |
| | | CV-P120-99 | LPIS pump bypass | Out | Inside | Globe (air) | 2 | Open | Closed | Yes | Open |
| 2. | S-9A | CV-P120-52 | LPI supply | In | Outside | Globe (air) | 6 | Open | Open | Yes | Open |
| | | CV-P120-76<br>CV-P120-81 | LPI supply | In | Inside | Gate (air) | 4 | Open | Open | Yes | Open |
| | | CV-P120-109 | HPIS suction from suppression tank | Out | Inside | Globe (air) | 1½ | Closed | Closed | Yes | Closed |
| 3. | S-9A | CV-P120-92 | IG-I to basement | In | Outside | Globe (air) | 1 | Open | Open | Yes | Open |
| | | V-2285 | IG-I to basement | In | Inside | Check | 1 | Open | N/A | No | Open |
| 4. | S-9A | CV-P120-115 | IG-II to basement | In | Outside | Globe (air) | 1 | Open | Open | Yes | Open |
| | | V-2442 | IG-II to basement | In | Inside | Check | 1 | Open | N/A | No | Open |
| 5. | S-5A | CV-P120-50 | Accumulator A | In | Outside | Gate (air) | 6 | Open | Open | Yes | Open |
| | | V-2164 | Accumulator A | In | Inside | Check | 4 | Open | N/A | No | Open |
| 6. | S-5A | CV-P120-113 | IG-I to test chamber | In | Outside | Globe | 1 | Open | Open | Yes | Open |
| | | V-2444 | IG-I to test chamber | In | Inside | Check | 1 | Open | N/A | No | Open |
| 7. | S-5F | CV-P120-114 | IA-IG-II to test chamber | In | Outside | Globe | 1 | Open | Open | Yes | Open |
| | | V-2445 | IA-IG-II to test chamber | In | Inside | Check | 1 | Open | N/A | No | Open |

TABLE 6-VI (contd.)

| Item | Penetration No. | Valve No. | Service | Flow Direction | Location (Ref CV) | Valve Type | Line Size (in.) | Normal Position | Power Fail Position | Position Indication | Post-accident Position |
|---|---|---|---|---|---|---|---|---|---|---|---|
| 8. | S-5F | CV-P120-91 | IG-II to test chamber | In | Outside | Globe | 1 | Open | Open | Yes | Open |
| | | V-2286 | IG-II to test chamber | In | Inside | Check | 1 | Open | N/A | No | Open |
| 9. | S-5F | CV-P120-35 | Accumulator A | In | Outside | Gate | 6 | Open | Open | Yes | Open |
| | | V-2165 | Accumulator A | In | Inside | Check | 4 | Open | N/A | No | Open |
| 10. | S-5A | CV-P128-117 | HPIS A | In | Outside | Globe (air) | 1½ | Open | Open | Yes | Open |
| | | CV-P128-109 | HPIS A | In | Inside | Globe (air) | 1½ | Open | Closed | Yes | Closed |
| 11. | S-5A | V-4061-LC | HPIS A | In | Inside | Manual globe | 1½ | Closed | N/A | No | Locked closed |
| | | CV-P120-63 | HPIS A | In | Inside | Globe (air) | 4 | Closed | Open | Yes | Open |
| | | CV-P120-90 | HPIS A | In | Inside | Globe (air) | 4 | Closed | Closed | Yes | Closed |
| 12. | S-5F | CV-P128-116 | HPIS B | In | Outside | Globe (air) | 1½ | Open | Open | Yes | Open |
| | | V-5134-CU | HPIS B | In | Inside | Swing check | 1½ | Open | N/A | No | Open |
| 13. | S-9A | CV-P120-105 | HPIS supply | Out | Inside | Globe (air) | 1½ | Closed | Closed | Yes | Closed |

(1) The valves had been designed to the previously issued (10 CFR Part 50) General Design Criteria, which permitted both isolation valves outside the containment vessel

(2) The valves were located outside the containment vessel to permit easy access to the valves for repair and emergency operation during experiments when the interior of the containment vessel was restricted to personnel access owing to radiological hazards

(3) Because of the severe environmental conditions that must be imposed for equipment located inside the containment vessel, the reliability of the isolation valve actuators is enhanced considerably by placing both valves outside the containment.

The large butterfly valves used to isolate the containment ventilation piping are equipped with air-cylinder operators with spring returns capable of closing the valves within 2 sec after initiation. The total time required for the valves to close, including the initiating time, is approximately 3 sec. These valves fail to the closed position on loss of control signal or instrument air.

The CIS meets the design basis by virtue of the following features of valve operation:

(1) All remote-air and motor-operated containment isolation valves can be remotely operated from the main control room. The open or closed conditions of all remotely controlled valves is displayed visually in the control room at all times. Manual valves have features for locking in the closed position.

(2) All lines penetrating the containment which normally carry radioactive fluids or that can communicate with the containment atmosphere following an accident are provided with radiation shielding in areas where personnel access is permissible.

(3) Valves that are normally open during power operation (Types I and II) and which must be closed for containment isolation are actuated to the closed position on receipt of a containment isolation signal.

(4) Redundant electrical control circuits are provided for all automatically operated containment isolation valves. The power supply for the control circuits and status indication lights are on the vital power bus.

(5) All air-operated isolation valves which are automatically initiated by the CIS fail closed on loss of control signal or control air.

(6) The closed systems that back up the containment isolation valves are adequately designed to contain any radioactivity introduced into the system as the result of an accident.

(7) Isolation lines are provided with features for periodically testing the leakage from the isolation valves.

(8) Penetrating lines other than those associated with ESFs which continue to be used, at least for a time, after containment isolation include:

(a) Secondary steamline

(b) Main feedwater line

(c) Low-level radioactive waste (component cooling system heat removal)

(d) Component cooling water makeup

(e) On-dolly instrument air

(f) Steam generator reference leg feed

(g) Basement equipment service water supply.

A detailed discussion of the containment isolation parameters and circuitry is presented in Section 7.0.

## 6.3 Pressure Reduction Spray System[11]

### 6.3.1 Design Basis

The pressure reduction spray system provides the capability to rapidly reduce the pressure in the containment vessel test chamber following a release of the primary coolant directly

into the containment, when deemed advantageous, to minimize fission product leakage. As is indicated in Section 15.4 and Appendix 6-E, the containment heat removal systems are not required to prevent the containment from exceeding the design pressures during accident or experimental blowdowns owing to the relatively small primary coolant volume in the LOFT system. The pressure reduction spray system is not classified as a PPS, because the predicted radiological exposures to the general public are less than accident guidelines (see Section 15.3.6).

The pressure reduction spray system is also provided to make it possible to perform tests to determine the effect of pressure reduction sprays on the pressure-temperature response of the containment vessel atmosphere. The system may also be used to evaluate the effectiveness of using spray solutions with various chemical additives in the removal of fission products from the test chamber atmosphere. Solutions used, if such testing is conducted, will include those typically used in LPWRs as well as other solutions which may appear to be most promising at the time. This system is designed to permit the use of a wide variety of chemical additives. In addition to the above-mentioned chemical additives, the solution will contain approximately 3000 ppm of boron to ensure reactor subcriticality in the event the solution enters the reactor vessel. The pressure reduction solution will be sampled and maintained within specifications by approved plant operating procedures[12]. The pressure reduction spray system also provides a means of supplying solution for the decontamination of the blowdown suppression tank and the containment vessel. The decontamination solution for the containment vessel would be supplied through the pressure reduction nozzles (see Section 6.11).

### 6.3.2 System Description and Evaluation

Figure 6-12 is the piping and instrument diagram for the pressure reduction spray system. The principal components of this system consist of two pressure reduction solution pumps; two concentric spray ring headers with 14 nozzles each; necessary

piping, valves, instrumentation, and controls; and a sump for storage of the pressure reduction solutions. The pumps are located in the containment vessel basement, and the spray ring headers with nozzles are located high in the test chamber. One of the pressure reduction pumps performs a dual function of being used for both containment pressure reduction operations and decontamination operations for the suppression tank and the containment vessel.

Redundant suction lines are provided between the pressure reduction and decontamination solution sump and the two pressure reduction pumps. The redundant lines are cross-connected to permit flow from either line to both pumps. In addition, they can also take suction from the condensate sump if desired. Each pump supplies solution to a separate spray ring header. The spray ring headers are in the form of two concentric rings located in the vessel dome, approximately 79 ft above the test chamber floor. Each spray ring header contains 14 solid cone fog nozzles which provide a spray droplet having a mean diameter drop size of 600 to 700 μ. Figure 6-11 shows the nozzle arrangement and the spray pattern provided by the nozzles. Solid cone fog nozzles were selected as most optimum because of the need for relatively uniform coverage in the spray pattern.

The spray droplets from the nozzle will fall through the test chamber atmosphere and, in doing so, will be heated to the saturation temperature by condensing vapor and cooling noncondensables, thereby reducing the test chamber pressure and removing airborne fission products. The droplets, on reaching the floor, flow to the peripheral trench. To minimize the temperature buildup of the water remaining in the sump, the used water will remain in the trench and build up on the containment test chamber floor. Once all of the water has been expended in the pressure reduction and decontamination solution tank, the valves to the tank from the filter sump will be opened to allow the used solution to be stored in the tank.

The filter sump contains a strainer with 3/32-in.-square openings to prevent particles from lodging in the sump impeller and/or plugging the spray nozzles. The nozzles are capable of passing particles up to 1/8 in. in diameter. In addition, a screen with 3/32-in.-square openings is attached to the underside of the peripheral trench grating to prevent the filter sump screen from plugging, and thereby assure that the pressure reduction solution can be returned to the storage tank for reuse or disposal.

The pressure reduction and decontamination solution sump stores the solution for use in the pressure reduction containment decontamination and blowdown suppression tank decontamination operations. The solution also can be used to supply core cooling solution in the event of a malfunction in the normal core cooling solution supply. Where a different solution is required for blowdown suppression tank decontamination use or containment decontamination (see Section 6.11), the sump is drained and the appropriate solution transferred to the sump from the solution preparation facility. The sump is equipped with tank-washing nozzles and a sump mixer.

Level instrumentation is provided in the sump for level readout and level alarms to annunciate in the main control room on both low and high liquid levels. The low-level alarm will warn that insufficient solution is available to continue spraying operation, and the high-level alarm will indicate that the sump is full during the filling operations. This information will be used for operation of both the pressure reduction spray system and the decontamination operation. The condensate sump also contains level instrumentation.

To prevent overheating of the system pumps in the event the flow system discharge valves are closed, a minimum flow through both pumps is assured by a restricting orifice in a bypass line which allows this small flow rate to discharge into the pressure reduction and decontamination solution sump.

Also, to prevent outleakage of potentially radioactively contaminated water by the pump shaft seals, the pumps are provided with seal water whenever they are operated.

Prior to the start of a nuclear operation, the pressure reduction and decontamination solution sump will be filled with approximately 10,000 gal of pressure reduction solution. An additional 10,000 gal can be drained to the pressure reduction-decontamination sump from the blowdown suppression tank. The pressure reduction solution will consist of demineralized water containing 3000-ppm boric acid. This solution may also contain a spray additive such as sodium hydroxide or other additives typical of those being used in commercial powerplants at the time of use.

The pressure reduction solutions are prepared by the primary coolant addition and control system (see Section 11.2). The solution is mixed in batches of 400 gal at a preselected concentration and then transferred to the pressure reduction and decontamination solution sump and diluted with demineralized water to reduce the concentration of boron to approximately 3000 ppm. The pressure reduction spray system has been designed for main control room operation in the remote-manual mode. The pumps are also capable of being operated locally for pump and system operational checks. The chemistry of the solution contained in the pressure reduction and decontamination solution sump can be determined by obtaining a grab sample via the sump sampling system. The sump sampling system is described in Section 13.2.3.7.

A review[13] of the effectiveness of the pressure reduction spray system in removing iodine from the containment atmosphere indicated that with a 500-gpm spray system, the removal half-life for elemental iodine from the containment atmosphere would be approximately 29 sec (90% removal occurs in approximately 96 sec). This iodine half-life was calculated on the basis of a spray solution which contains no chemical additives other than boric acid.

## 6.4 Containment HV System[14]

### 6.4.1 Design Basis

The containment HV system is provided to supply air to heat, ventilate, cool, humidify, and clean up the containment vessel test chamber and basement. During experiments which blow down to the blowdown suppression tank, no release of fission products to containment atmosphere is expected; thus, no containment atmosphere cleanup system is required for these experiments.

During containment vessel blowdown experiments, however, the containment atmosphere may require a cleanup system. To clean up the atmosphere following a containment blowdown experiment which releases fission products to the containment vessel, the system includes a moisture separator, particulate filters, and charcoal adsorbers to remove airborne particulates and radioactive halogens from the containment vessel atmosphere. Following the completion of the atmosphere cleanup, the air is released through the 150-ft-high stack. The filter system and containment pressure reduction spray system will reduce the radioactive level of the containment atmosphere to meet the discharge level guidelines established in ID Manual Chapter 0510, Part IC. The filter and the spray system, however, are not required during the conduct of a LOCE even when discharging directly into the test chamber, but they are provided to make the test capability available if such experiments are desired and make it possible to further minimize the fission products released to the outside environs.

The hydrogen production and release into the containment vessel and the resulting concentration following a containment blowdown experiment are discussed in detail in Appendix 13-D. Hydrogen detection equipment is installed in the containment vessel (see Section 6.7.2) to monitor any buildup of $H_2$ in the containment atmosphere. This provides a means of detecting $H_2$ buildup and permits initiating corrective action if required.

During the nonnuclear and nuclear operation, the containment HV system provides balanced supply and exhaust flows to maintain the containment vessel pressure at atmospheric pressure. The HV equipment is external to the containment.

Isolation valves are required on the HV system penetrations into the containment vessel to prevent the possibility of releasing fission products to the outside environs and radioactively contaminating the HV equipment during a LOCA. These isolation valves will be manually closed prior to the conduct of a planned blowdown.

### 6.4.2 System Description and Evaluation

The containment HV system receives its makeup air from the outside air intake during normal operations as shown in Figure 6-13. The makeup air is heated or cooled, depending on seasonal changes and the containment vessel temperature requirements. Because of the possibility of radioactively contaminating equipment inside the containment vessel, no distribution ductwork extends into the test chamber. To minimize stratification, air is introduced into the chamber at a level considerably lower than the level where air is exhausted. Air is exhausted from the containment vessel directly to the exhaust stack during normal operations.

The exhaust system is also equipped with a recirculating air loop. Air is recirculated to the vessel in mixed quantities of outside air during periods when outside air heating is required. The return air portion of the recirculating loop is also used during filter operations to decontaminate the containment atmosphere.

A separate exhaust duct, for filter operations, is installed connecting the containment vessel to the main filter vault to eliminate contamination of ventilating ductwork used during normal operations. During filter operations, air is recirculated continuously from the containment vessel and through the filter system until the level of contamination is low enough

to permit discharge of air to the exhaust stack in accordance with ID Manual Chapter 0510 guidelines.

The filter and adsorber media used in the system include a moisture separator to remove the entrained moisture, roughing and HEPA filters to remove the particulate material, and impregnated charcoal adsorbers to remove the halogens. The air is heated after leaving the moisture separator to preclude plugging or weakening of the particulate filters by condensation of moisure from the airstream. The filter and adsorber media housings facilitate easy removal of any individual filter without disturbing the adjacent filter. Both the HEPA filters and charcoal adsorbers meet the requirements of the applicable military and RDT standards. The efficiencies for the filters and adsorbers are as follows:

(1) The HEPA filters are tested with DOP to have a filter removal efficiency of 99.97%.

(2) The charcoal adsorber media is tested to have an iodine removal efficiency of 99.9% for elemental iodine and 98% for methyl iodide.

The filter system can remove the fission product decay heat buildup in the charcoal adsorbers and particulate filters by means of recirculating air through the filter vaults. Redundant fans are provided in the recirculation system. To ensure airflow through the filter or adsorber media, either fan can be switched to the diesel generator system in the event of a commercial power outage. The power to operate the valves in the recirculation system is supplied by either the vital power system (see Section 10.2.3) or the commercial power supply, which can be switched to the diesel generator supply system. The filter vault is provided with fire protection equipment to control any fire that may occur in any filter or adsorber of the filter system. The equipment consists of instrumentation to detect when a fire occurs (charcoal temperature sensors), an alarm system coupled with the detection instruments, and a manually initiated filter vault flood system to extinguish any fires that may occur.

An inert gas smothering system which serves as an additional fire protection system can be activated to fill the filter vaults with nitrogen to extinguish any fires that might occur. The air cleanup system described above satisfies the intent of Criteria 41, 42, and 43, as presented in Appendix 1-A.

## 6.5 Circular Crane and Access System[15]

### 6.5.1 Design Basis

The circular crane is used for hoisting and positioning containment facility equipment and MTA components in the containment vessel. In addition, the crane (see Figure 6-14) is used to support and position the sidewall and dome access system. The crane design conforms to the guidelines established in Health and Safety Design Criteria Manual (IDO-12044) and RDT Standard E 8-6T with the exception of the QA program which shall meet the intent of RDT Standard F 2-4T.

### 6.5.2 System Description and Evaluation

The circular crane system consists of an overhead, top riding bridge crane. The crane bridge is fitted with platforms and attachment points for the removable personnel hoist to provide access to surfaces of the test chamber sidewalls and dome. The crane may be controlled from remote locations, both within and outside the test chamber. The remote control locations outside the containment are to be primarily used during containment decontamination operations (see Section 6.11). The personnel hoist is fitted with local controls. Provisions are available for communications and auxiliary power at select locations on the crane and on the personnel hoist.

The crane is located approximately at the junction of the dome and vertical shell of the containment vessel as shown in Figure 6-13. It has two hooks, one with a 50-ton capacity and the other with a 10-ton capacity. The crane is designed with safety factors of 6 to 1 for the breaking strength of the hoisting rope and 5 to 1 for the crane structural components. The vertical hook reach is from 1 ft above the basement floor to 60 ft above

the operating floor; the horizontal hook reach is to 6 ft from the containment vessel wall at one end of the bridge and to 8 ft 3/4 in. from the wall at the opposite end of the bridge.

The rotational capabilities require a minimum rotation of 370° from a zero point at the centerline of the north side of the vessel without the decontamination piping installed. With the decontamination piping installed, the rotation will be limited to 316°.

The components of the crane structure and operating equipment are designed or selected to be compatible with the environmental condition as generated by a LOFT experiment and to preclude the entrapment of contaminated materials.

The operation of the crane for lifting equipment is restricted to periods when personnel are in the test chamber to control the crane movement. This restriction minimizes the probability of damaging the MTA piping and equipment during unsupervised crane operations. With this precaution taken, it is highly unlikely that any damage to the MTA will result from any crane operation.

## 6.6 Containment Leak Test System[16]

### 6.6.1 Design Basis

The containment leak test system provides the capability of pneumatically pressurizing and depressurizing the containment vessel to conduct the leakage rate tests. These tests are required to satisfy AEC requirements for containment leakage rate testing and surveillance as stated in the guidelines set forth in 10 CFR Part 50, Appendix J (see Section 6.1.5 and Appendix 6-D).

The leakage rate of the containment (maximum design leakage rate is 0.2% of dry air per day at 36-psig pressure) is measured by the absolute method of determining the containment leakage rate. The leakage rate results are to be verified by the superimposed leak technique. Both the absolute method and superimposed leak techniques are described in ANSI Standard N 45.4-1972 (see Section 6.1.5).

Equipment and instruments are provided to measure the leakage from the space between the penetration seals of the penetrations most likely to leak during independent penetration void space pressurization tests. The penetration seals to be tested include the railroad door seals, the airlock door seals, and the HV containment isolation valves. This testing program satisfies the intent of Criterion 52 as presented in Appendix 1-A.

### 6.6.2 System Description and Evaluation

The containment leak test system is composed of two subsystems; viz, (a) the pressurization and depressurization system and (b) the leakage rate test system.

#### 6.6.2.1 Pressurization and Depressurization System

The pressurization and depressurization system provides the air supply and exhaust control capability to pneumatically test the containment vessel during the leakage rate verification tests. The system consists of a pressurization-depressurization line to the containment vessel test chamber and an air port through the test chamber floor membrane into the basement area as shown in Figure 6-15.

The containment vessel is depressurized through the test chamber depressurization line. During the leak tests on the entire containment vessel (test chamber and basement), airflow paths through the test chamber floor membrane are provided to depressurize the basement through the test chamber depressurization line. During leak tests on the test chamber portion of the vessel only, any pressure buildup in the basement attributed to leaks from the test chamber is vented during the test chamber depressurization through a special differential relief valve installed in the containment membrane. This valve prevents the basement pressure during the vessel depressurization from exceeding the maximum design differential pressure of 2 psid above the test chamber pressure. If the pressure differential exceeds the design, the structural integrity of the membrane could not be assured.

The air used to pressurize the containment vessel is supplied by the plant air system. In the event of a plant air compressor failure, portable compressors can be connected to the air supply system. The air supply is capable of pressurizing the containment vessel in about 24 hr. The air supply employs air treatment equipment to remove excess oil and reduce the moisture content of the air. Pressurization of the basement is accomplished by opening the airflow path in the membrane and allowing air to flow from the test chamber to the basement. This air port remains open whenever the basement is pressurized.

Prior to conducting a pneumatic test, pressure relief devices are installed on the containment vessel as required by the ASME Boiler and Pressure Vessel Code. After the pneumatic testing has been completed, these devices are removed and replaced by a blind flange which provides a seal to prevent the release of radioactive material during the conduct of the experimental program.

6.6.2.2 Leak Rate Test System

The leakage rate test system consists of temperature, pressure, and moisture instrumentation to measure the thermal, pneumatic, and psychrometric properties of the containment vessel atmosphere. The instrumentation has either visual readout or an analog signal that is recorded by a data acquisition system. The containment leakage is determined by calculating the difference in the mass of air in the containment vessel at two specific times, employing the measured data and the perfect gas law relationship. The leakage rate is determined by dividing the total calculated leakage by the time period between the respective containment atmosphere measurements. Leakage rate readings are recorded on an hourly basis, and the leakage rate is calculated for each time period with

respect to the initial test conditions. The final leakage rate, however, will be based on the least-square fit of the leakage data for the time period between the start of the test and the last data reading.

The method of measuring the leakage rate from the LOFT containment vessel is supplemented by a method of verifying the accuracy of the leak rate results. These methods are discussed in the following paragraphs.

6.6.2.2.1 Absolute Method

The absolute method relies on the measurement of the absolute pressure in the containment vessel at two separate times. The pressure at the second time is corrected to the temperature and humidity conditions existing during the initial measurement. The change in the corrected pressure during this time interval can be converted into a leakage rate.

6.6.2.2.2 Superimposed Leak Method

The superimposed leak method is used in conjunction with the absolute method. This method employs the accurate measurement of a leakage rate through a calibrated leak intentionally superimposed on the existing leaks in a containment structure. The leak can be initiated by opening an instrument flow valve. The superimposed leak flow rate is normally established to be about equal to the maximum allowable daily leakage rate for the containment vessel.

The superimposed leakage rate test procedure involves placing the calibrated leak system into operation after the leakage rate test in progress is completed. The flowmeter readings are then recorded hourly. Concurrently, readings of the

vessel leakage measuring system, which now records the composite leakage of both the containment vessel leaks and the superimposed leak, are resumed on an hourly basis.

The readings of the flowmeter as a function of time permit calculation of the average leakage rate ($L_o$) through the superimposed leak system. From the analysis of the hourly readings taken with the vessel leakage measuring system, the composite leakage rate ($L_c$) is determined. The vessel leakage rate ($L_v'$) through containment vessel leaks is then obtained by subtracting the measured superimposed leakage rate from the composite leakage rate ($L_c$); thus, $L_v' = L_c - L_o$.

If the result of the leakage measurements obtained prior to the introduction of the superimposed leak yields a leakage rate ($L_v$) which is in reasonable agreement with the calculated value ($L_v'$), the accuracy of the vessel leakage measuring system is verified, and the leakage rate results are validated.

The data acquisition system and the signal conditioning equipment portion of the leak rate test system are located in Building TAN-650 (Room 218). The test instrumentation is installed in the test chamber during the leak test as shown in Figures 6-15 and 6-16. The leakage test instrumentation is removed from the containment test chamber except during leak tests. The pressurization and depressurization system is controlled by test personnel at the pressurization system isolation valve location.

The separate leak testing of each of the penetration seals (i.e., railroad door, airlock, instrumentation, etc.) is done by pressurizing the voids between the dual seals with the plant air system. The pressure measurement instruments used to measure the seal void pressure during the penetration leak tests will have sufficient accuracy to measure the calculated pressure decay (i.e., acceptable component leak rate) in a reasonable period of time.

## 6.7 Containment Sampling and Hydrogen Detection System[17]

### 6.7.1 Design Basis

The containment sampling systems provide radiological information related to personnel protection during periods when the reactor is not operating. During reactor operations the sampling systems provide information related to the release of radioactive material due to leakage from the reactor system into the containment vessel. Following a LOCE or LOCA, the sampling systems measure the fission product release to the blowdown suppression system or to the containment vessel. A means for measuring the fission products contained in both the atmosphere and liquid of the blowdown pressure suppression system and/or the containment atmosphere is provided. The containment sampling systems also provide information related to the effectiveness of the containment atmosphere cleanup following an experiment when fission products are released.

The containment atmosphere is monitored to determine if there is a hydrogen buildup due to a LOCA or containment LOCE. The detectors will verify that the hydrogen concentration is below the explosive limit.

### 6.7.2 System Description and Evaluation

The containment sampling systems consist of a containment atmosphere sampling system, a blowdown suppression tank atmosphere and liquid sampling system, and a containment sump sampling system. These systems are discussed in detail in

Section 13.2.3. The containment and blowdown suppression tank atmosphere and liquid monitoring systems defined by the systems presented in this section satisfy the intent of Criterion 64 as presented in Appendix 1-A.

Three hydrogen detectors are located in the upper portion of the containment vessel test chamber to detect any buildup of hydrogen in the containment atmosphere. In the event that the hydrogen concentration approaches the explosive limit, any one of the $H_2$ detectors will initiate a high-level alarm. The $H_2$ concentration from any of the detectors can also be displayed in the control room.

## 6.8 Containment Personnel Airlocks[7]

### 6.8.1 Design Basis

The containment vessel personnel airlocks provide access to the containment vessel test chamber and basement from outside the vessel. The airlocks (upper and lower) also provide a pressure boundary and minimize the leakage of the containment atmosphere to the outside environs. These airlocks are designed to satisfy the requirements of Section III of the ASME Code and will be leak-tested in accordance with 10 CFR Part 50, Appendix J as discussed in Appendix 6-D. A communication system between each of the airlock control stations and its respective airlock chamber is provided.

An additional escape route is provided in the containment vessel membrane, which separates the test chamber from the basement. This escape route provides emergency access between the test chamber and basement in the event that an airlock used for normal personnel egress fails.

### 6.8.2 System Description and Evaluation

The containment airlocks consist of two types; viz, (a) the airlocks which penetrate the containment and (b) the escape route which penetrates the membrane separating the test chamber from the basement.

6.8.2.1 Containment Airlocks

The two airlocks used for ingress to and egress from the containment vessel test chamber and basement are separate; however, they are identical in design except for the length of the airlock barrels. The unobstructed passage through either airlock is 6 ft 8 in. high by 4 ft wide, which is maintained when the doors are in the fully opened position.

Airlock 1 is located with its centerline at elevation 4794 ft 6 in. and its vertical axis on the west centerline of the vessel test chamber. Airlock 2 is located with its centerline at elevation 4779 ft and its vertical axis on the north centerline of the containment vessel.

The doors of both airlocks are gastight and of the quick-opening autoclave type. They provide an unobstructed passage equal in diameter to the airlock barrels. Both doors of each airlock open outwardly from the barrel.

The airlocks and their doors are designed and constructed to maintain the continuity of the containment vessel as a coded vessel. They are designed, also, to withstand an internal pressure equivalent to the vessel test pressure. All materials are chosen to be suitable for the containment environment. The doors are designed for a minimum of 10,000 openings and closings.

As shown in Figure 6-17, each airlock is equipped with pressure-equalizing valves; interlocks; signal systems; interior lighting; safety devices; and provisions for communication with each airlock control station and the reactor control room, together with all necessary equipment to make it operable. Some of the safety features included in the design are emergency breathing air, lights, relief valves, and two independent supplies of pressurized gas for operating the door. Three air cylinders are used

to rotate each locking ring to and from its closed and sealed position. Compressed gas is normally used to operate the airlock door locking rings. The locking rings are actuated manually from either side of each door.

6.8.2.2 Membrane Escape Route

The escape route which penetrates the membrane separating the test chamber and basement is a 25-in.-diameter tube with a manually operated submarine-type hatch on both ends. The unobstructed passage through the escape route is 22 in. in diameter with the hatches fully opened.

The escape route is located with a centerline radius of 22 ft 6 in. and 19° north of LOFT east inside the test chamber floor hatch. The hatch on both ends of the escape route is gastight when in the fully closed position, and both hatches open outwardly from the barrel section.

The escape route is needed for personnel movement to and from the test chamber if the main airlocks should become inoperable or inaccessible.

The escape route is designed and constructed to maintain compatibility with the test chamber environment and to withstand the maximum design test chamber pressure external to the escape route when the escape route doors are secured. The escape route is equipped with pressure-equalizing valves, interior lighting, and all necessary equipment to make it operable.

Because of the limited size of this escape route, the egress of personnel from the test chamber to the basement requires special opening equipment on the lower hatch cover. This equipment consists of specially designed, foot-operated, lower hatch unlocking and release mechanisms and a pressure equalization valve.

## 6.9 Television System[18]

### 6.9.1 Design Basis

The television (TV) system provides (a) surveillance of the inside of the test chamber and the MTA and (b) visitor monitoring of activities in the main control room and the test chamber. A video recorder provides a recording from any one of the four TV cameras, and video tape recordings may be made from the TV kinescopes when desired.

### 6.9.2 System Description and Evaluation

The TV system consists of four identical, independent, high-resolution monochrome, closed-circuit TV camera chains (subsystems) with three of the viewing monitors located in the main control room and the fourth in the visitors' area (Room 117). Three cameras will be located in the test chamber to provide two views of the sides of the MTA and one view of the top of the MTA and the blowdown system components. These cameras are located to permit inspection of the test chamber wall and floor areas from several different angles. A fourth camera is mounted on a pan-and-tilt unit in the main control room. This camera will permit visitors to view activities in both the test chamber and the main control room from the visitors' area. The activities in the test chamber will be viewed by training the main control room camera on the three TV monitors whose cameras are located in the test chamber.

The cameras are equipped with motorized zoom lenses. Environmental enclosures protect the cameras and lenses located in the test chamber from the test chamber environment. The cameras are mounted on remotely controlled pan-and-tilt units. Three sets of remote operating controls for the zoom lens and pan-and-tilt functions and the camera control-video processors are located near the viewing monitors in the main control room, and the fourth set of controls is located in the visitors' area.

The TV system layout is shown in Figure 6-18.

## 6.10 Blowdown Suppression System[19]

The blowdown suppression system is located on the test chamber floor next to the MTA. This tank contains the effluent from most of the LOCE testing. A complete description of this system is contained in Section 11.11.

## 6.11 Decontamination System[20]

### 6.11.1 Design Basis

The decontamination system is provided to reduce the radiation levels in the test chamber to facilitate reentry for refurbishment and requalification of facility equipment to minimize turnaround time between experiments.

### 6.11.2 System Description and Evaluation

The decontamination system provides the capability for decontaminating the internal surfaces of the blowdown suppression tank. The dual-purpose decontamination-pressure reduction pump takes solution from the pressure reduction and decontamination solution sump and pumps the solution to a header entering the blowdown suppression tank. The tank is equipped with five jet spray nozzles positioned to cover the internal surfaces of the tank.

Decontamination of the internal surface of the blowdown header will be accomplished manually. Ten 6-in.-diameter access ports are provided for this operation.

In the event that decontamination in the containment vessel is required, the decontamination can be effected manually or with the pressure reduction nozzles. If the sprays are used, the decontamination solution will be continuously recirculated to minimize the total quantity of solution used and the quantity of solution requiring disposal to the high-level radioactive waste system.

The decontamination solution for the blowdown suppression tank and the containment vessel will consist of borated demineralized water. This solution was selected to minimize the potential of reactor criticality in the event the solution reaches

the reactor core. The use of other chemicals added to the borated water to enhance the decontamination will be studied on a case-by-case basis after evaluating the effects of the chemicals on the affected systems and components.

Chemicals used in the preparation of decontamination solutions will be handled in accordance with written procedures approved by an industrial hygienist. These solutions will be used in systems capable of discharging their waste effluent to a system capable of handling the chemical waste.

The decontamination pump is also used as a part of the pressure reduction system (see Section 6.3 and Figure 6-12) to supply solution to one of the concentric rings of pressure reduction spray nozzles.

## 6.12 Tests and Inspections

Tests and inspections will be conducted throughout the construction and operation of the containment facility. The purpose of these tests and inspections is to ensure that the facility meets the design requirements prior to the startup of the reactor and throughout the test program. The containment inspections include those required by 10 CFR Part 50, Appendix J (see Section 6.1.5). The qualification tests include the integrity and leak rate tests on the containment structure. The test plan is discussed in detail in Section 6.D.4 of Appendix 6-D.

## 6.13 Special Features Having Safety Significance

The containment facility provides many features which contribute a high level of confidence in the safety and reliability of the essential portions of the plant. The following subsections describe those features which provide safety through facility design and protection systems.

### 6.13.1 Facility Design (First Level of Safety)

The facility -- as designed, constructed, and tested and as will be operated and maintained -- provides a highly assured capability for reliable and predictable operation and an inherent capacity to prevent the occurrence of accidents by means of the following features:

(1) The containment vessel, vessel accessories, and blowdown suppression system have been designed and constructed to satisfy the requirements of the ASME Codes as listed in Section 6.1.5.2.

(2) A QA program has been followed, as described in Appendix 6-C, which provides assurance that the critical structures were constructed, tested, and inspected in accordance with the specifications.

(3) The containment penetrations (see Section 6.1.6) are of the "double seal" concept. This design concept maintains the containment integrity in the event of a seal failure and minimizes the leakage potential in the event of a reactor accident.

(4) The containment vessel leak test program conforms to the guidelines of 10 CFR Part 50, Appendix J as described in Appendix 6-D. This leak test program provides assurance that the containment and its penetrations will be maintained within the design limits.

(5) The containment vessel design pressure is greater than a factor of 2 higher than the predicted peak pressure calculated for a LOCA. This provides added assurance that the containment will maintain its structural integrity in the event of a LOCA and minimize the resulting release of radioactivity.

(6) The containment vessel is provided with vacuum relief devices (see Section 6.1.8) to maintain the vessel pressure within design limits. These devices assure that structural integrity of the vessel will be maintained.

(7) Shielding is provided to limit the exposures and protect the operating personnel during normal reactor operation and the experimental testing and in the unlikely event of an accident. The shielding included in the design allows the operating personnel to safely remain in the control area to provide added assurance that adequate core cooling is maintained in the event of an accident.

(8) As discussed in Appendix 13-D, the maximum calculated concentration of hydrogen buildup in the containment atmosphere would not reach the explosive concentration (4%) for a period greater than 100 days after a LOCE, assuming the containment vessel is isolated for the entire period. Operating the containment in this isolated mode for this period of time is not in the program plan, and its occurrence is considered unlikely. As a precautionary measure, however, hydrogen detectors described in Section 6.7 are located in the containment vessel atmosphere to detect any buildup of hydrogen. These detectors provide a means of determining when corrective action should be initiated to prevent a possible explosive mixture of hydrogen from occurring. A hydrogen explosion could jeopardize the structural integrity of the vessel.

(9) Containment vessel atmosphere and liquid effluent sampling systems are provided to determine the radioactive releases during the reactor operations and the conduct of experimental blowdowns. Any significant deviations from the normal releases will alert the operators to initiate corrective action to limit the releases. These systems will minimize the radioactive releases to the outside environs during accident and abnormal conditions.

(10) TV cameras (see Section 6.9) are installed in the containment to monitor the equipment throughout normal reactor operations and experiments, or in the unlikely event of an accident. The TV monitors are observed in the control room, where visual inspections of the containment and MTA equipment can be made. TV viewing inside the containment can alert the operators to unusual occurrences that sometimes indicate impending system failure.

(11) Each of the containment support systems has been designed in accordance with approved design requirements contained in system design documents (SDDs). These requirements established in the SDDs are reviewed and approved by ANC

management and the AEC. Any changes to the SDD requirements must be processed through an established review and approval chain before changes are incorporated into the system design. This assures that the systems are designed to satisfy the approved system design requirements. The SDDs for the containment system are listed in Section 6.14.

6.13.2 Protection Systems (Second Level of Safety)

The facility is designed in such a way that in the event of errors, malfunctions, or abnormal conditions, the containment protective system will arrest the event or limit the consequences to defined or acceptable levels. These systems are as follows:

(1) The containment vessel is equipped with a CIS (see Section 6.2), which isolates the containment in the unlikely event of a LOCA. This system has two redundant initiating circuits, power supplies, and valves in series for each penetration line required to be closed. The valves fail in the closed (safe) position upon loss of power. The penetrations having communication between the test chamber and the outside environs, i.e., ventilating piping, have valves that close in a relatively short time (2 sec) to minimize the release of fission products in the event of a LOCA.

(2) The containment equipment includes a blowdown suppression system (see Section 6.10), which contains the effluent from a blowdown experiment and provides an additional fission product barrier. This system will minimize the radioactivity which is released to the containment vessel atmosphere and to the outside environs under uncontrolled meteorological conditions.

(3) A filter system is provided as a containment support system (see Section 6.4) to reduce the containment vessel airborne halogen and particulate radioactivity concentrations. Using this filter system will reduce the amount of radioactivity released to the outside environs in the event of an accidental release.

(4) The containment design includes a containment pressure reduction system (see Section 6.3), which would reduce the pressure and fission product concentration in the containment atmosphere following a LOCA. This system is provided with redundant systems (i.e., pumps, headers, etc.) which provide assurance of operation if required. As mentioned in the safety analysis, this system is not required to meet the offsite guidelines and is not classified as a PPS. To assure that the reactor will remain subcritical during the use of this system, a boron concentration of 3000 ppm will be maintained in the solution used.

## 6.14 References[a]


1. Aerojet Nuclear Company, LOFT Program Division, FDD 1.2, "Containment Facility".
2. Idem, SDD 1.2.10, "Containment Vessel Pressure Boundary System".
3. Idem, SDD 1.2.11, "Containment Floor Membrane, Sump Liners, and Membrane Nozzle System".
4. Idem, SDD 1.2.12, "Containment Vessel Structural and Dolly Support Foundation System".
5. Idem, SDD 1.2.16, "Electrical Penetrations and Cable Harness System"
6. Idem, SDD 1.2.17, "Piping Penetrations Through Containment Vessel".
7. Idem, SDD 1.2.14, "Containment Personnel Airlocks System".
8. Idem, SDD 1.2.13, "Containment Vessel Railroad Door Operating and Sealing System".
9. Idem, SDD 1.2.9, "Radiation Shielding System".
10. Idem, SDD 1.2.8, "Containment Isolation System".
11. Idem, SDD 1.2.1, "Pressure Reduction Spray System".

12. Idem, LOFT Plant Operating Manual, Volume 2, Chapter 8, "Plant Water Chemistry".

13. G. A. Dinneen, Aerojet Nuclear Company, Private Communication with W. A. Yuill, Aerojet Nuclear Company (October 17, 1972).

14. Aerojet Nuclear Company, LOFT Program Division, SDD 1.2.3, "Test Chamber and Basement Heating, Ventilating, and Halogen and Particulate Removal System (HV System 9)".

15. Idem, SDD 1.3.17, "Circular Crane System".

16. Idem, SDD 1.2.6, "Containment Leak Test System".

17. Idem, SDD 1.3.22, "Plant Radiation Monitoring System".

18. Idem, SDD 1.3.21, "Television System".

19. Idem, SDD 1.1.2 "Blowdown System".

20. Idem, SDD 1.2.2, "Decontamination System".

[a] Current issue unless otherwise indicated.

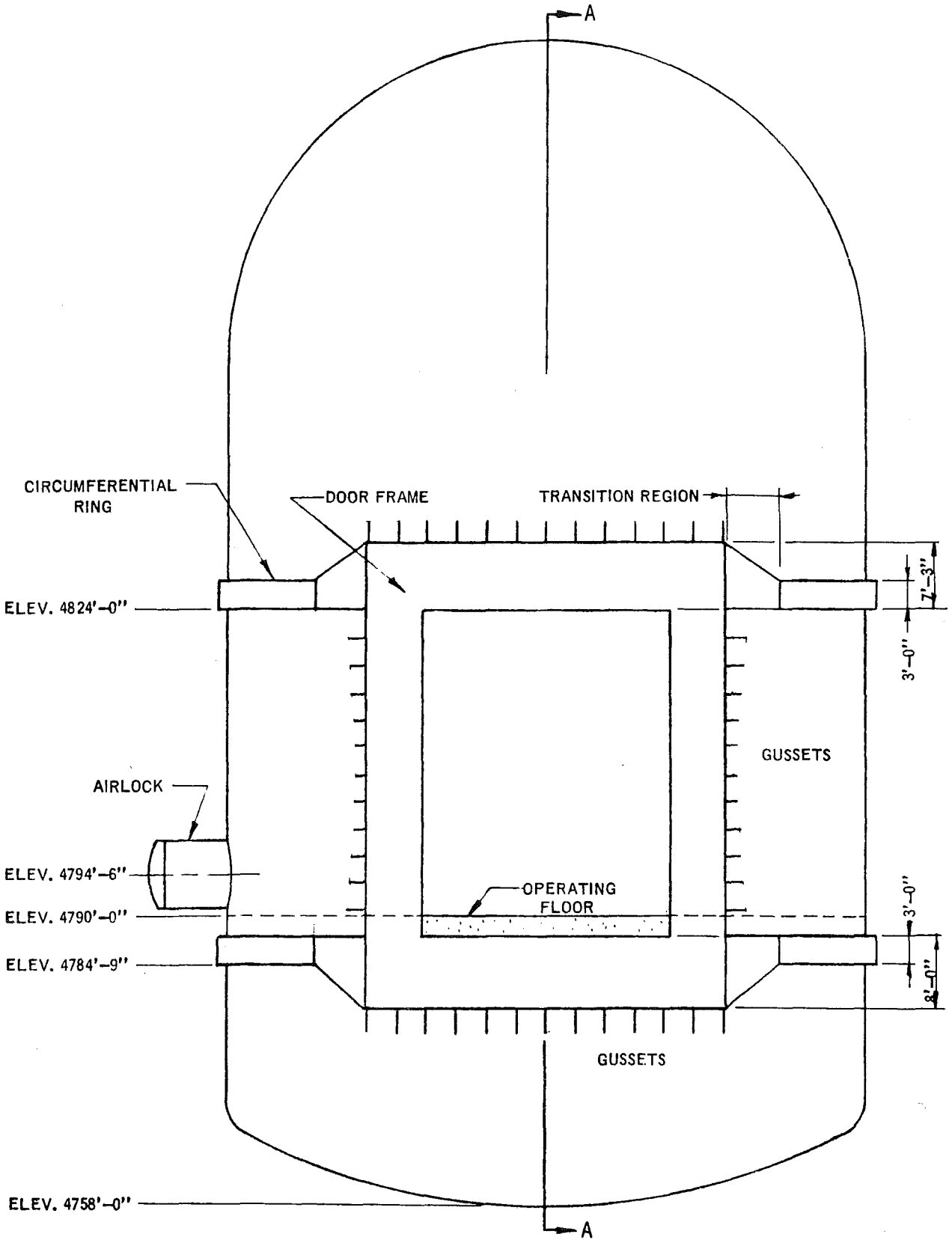


FIG. 6-1 CONTAINMENT VESSEL VIEW FROM SOUTH LOOKING NORTH.
(PDM FINAL STRESS REPORT -70)

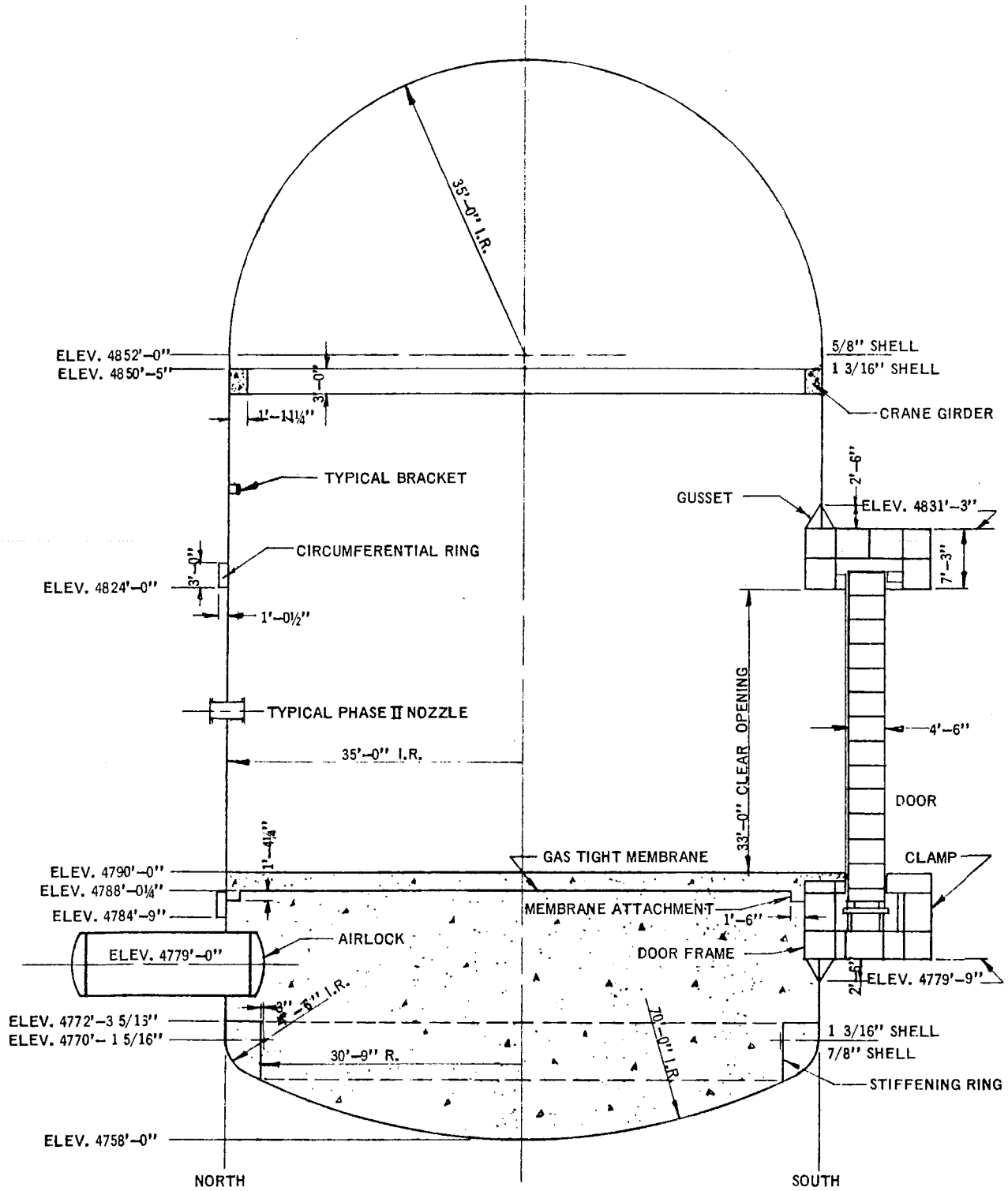


FIG. 6-2 CONTAINMENT VESSEL SECTION A-A.

(PDM FINAL STRESS REPORT -70)

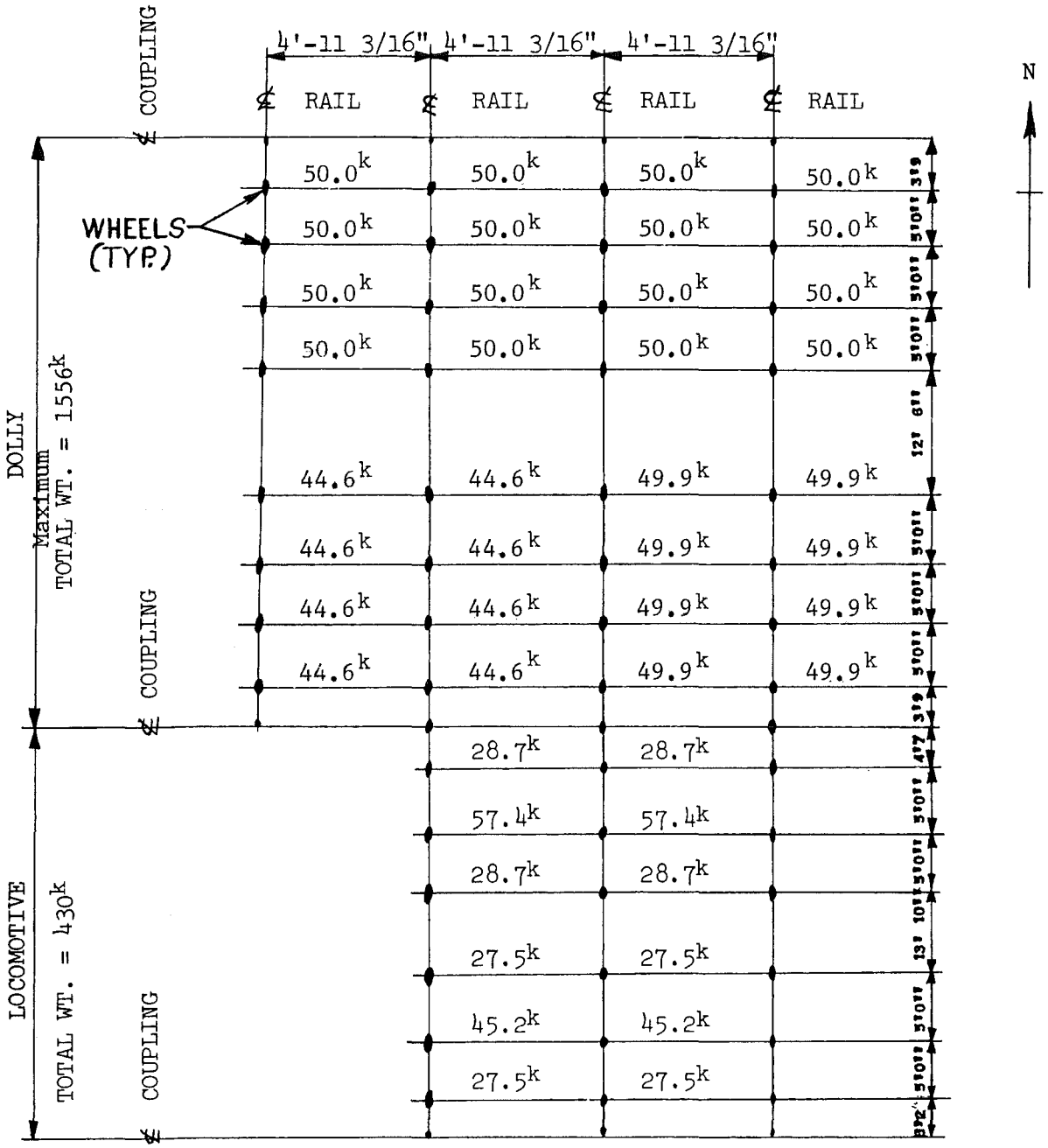


FIG. 6-3 LOCOMOTIVE AND MTA MAXIMUM WHEEL LOADING (BASED ON 778-TON MTA).

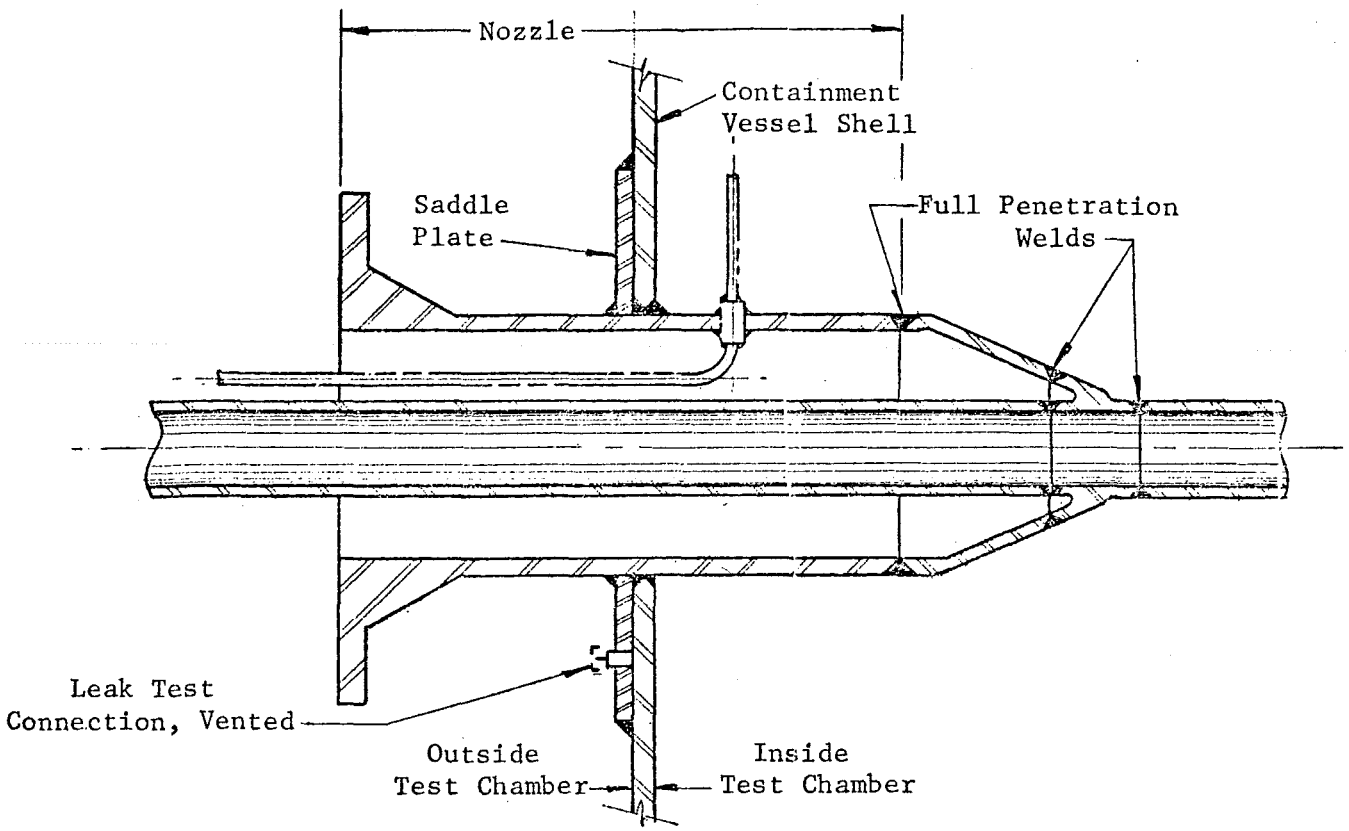


FIG. 6-4 TEST CHAMBER PIPE PENETRATIONS (TYPE 1).
(LTR 1217-3, B)

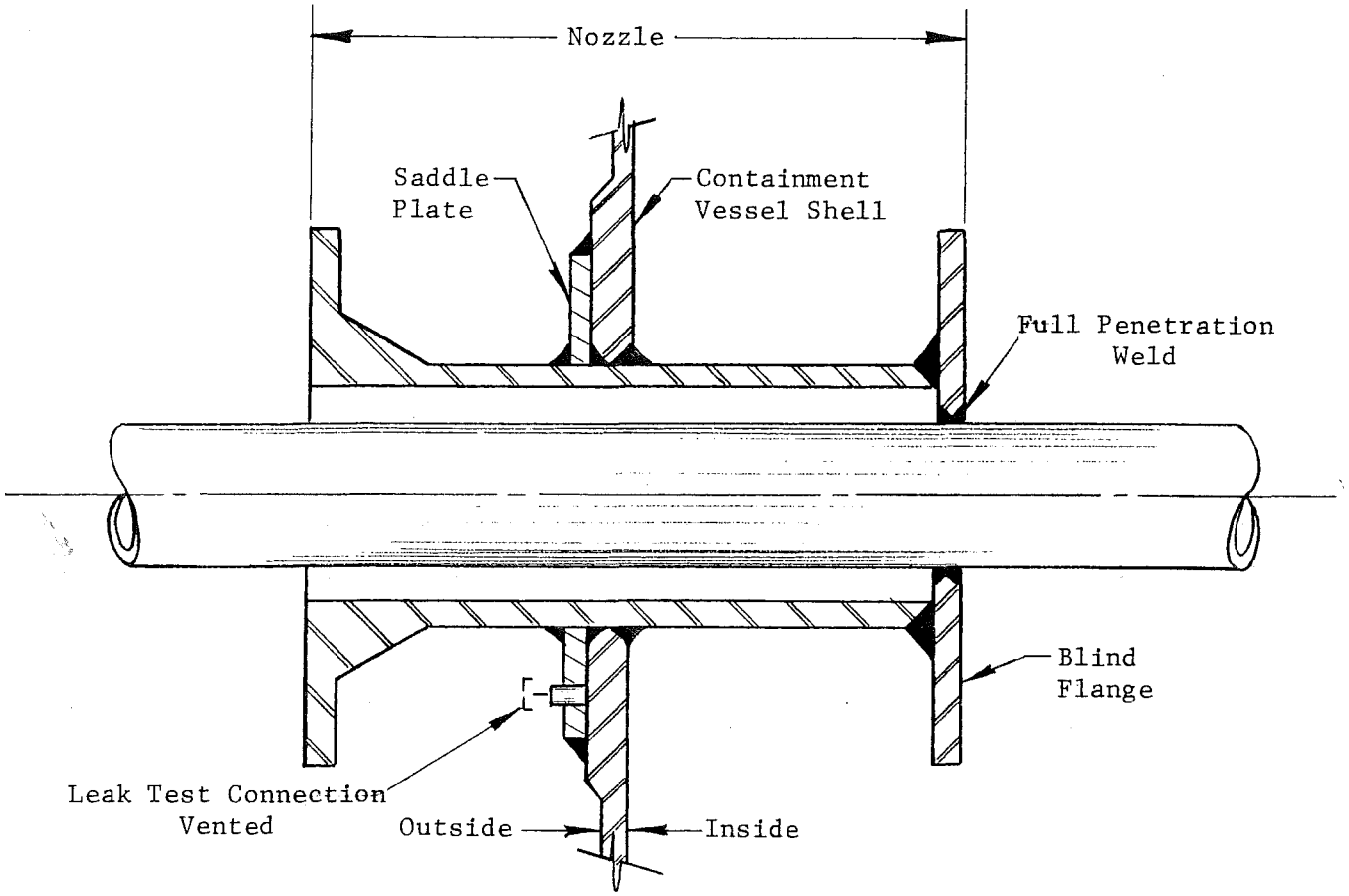


FIG. 6-5 TEST CHAMBER PIPE PENETRATIONS (TYPE 2).
(ECRA L-1312)

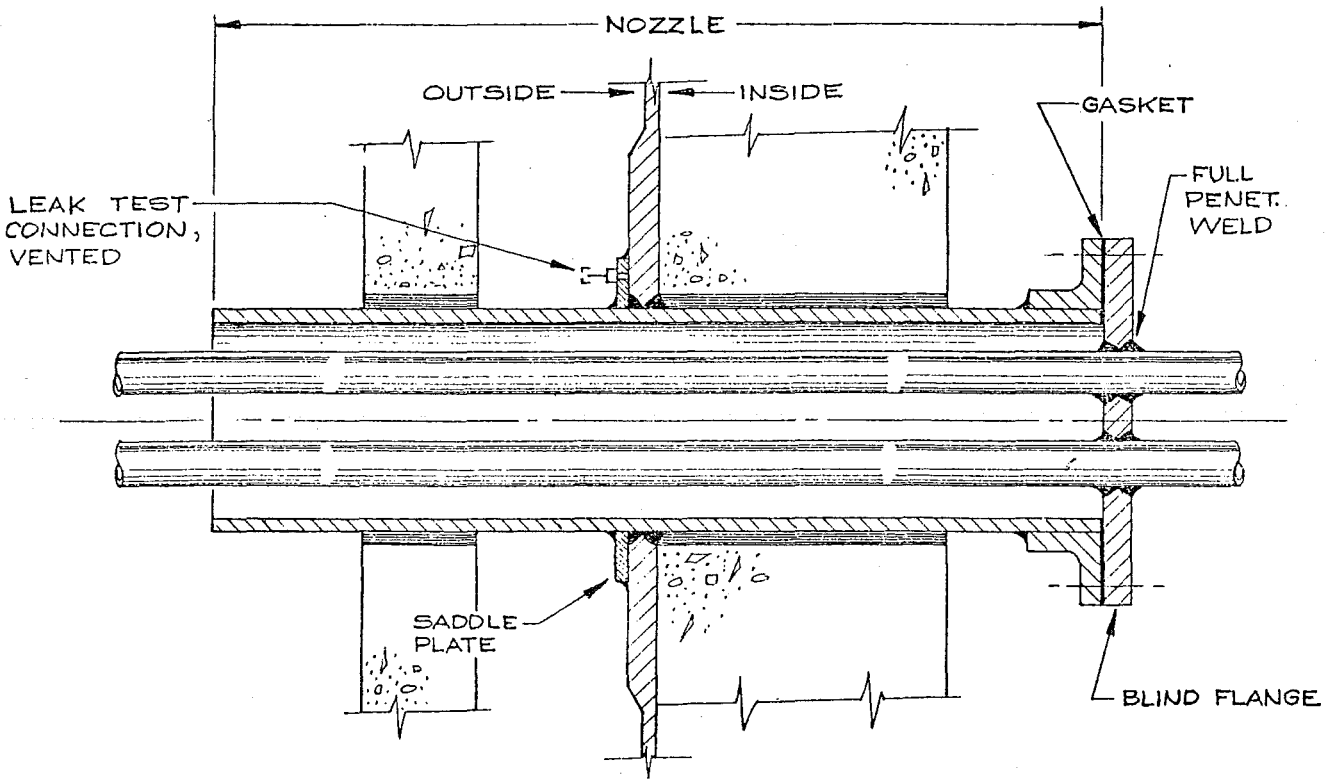


FIG. 6-6 BASEMENT AREA PIPE PENETRATION.
(LTR 1217-3, B)

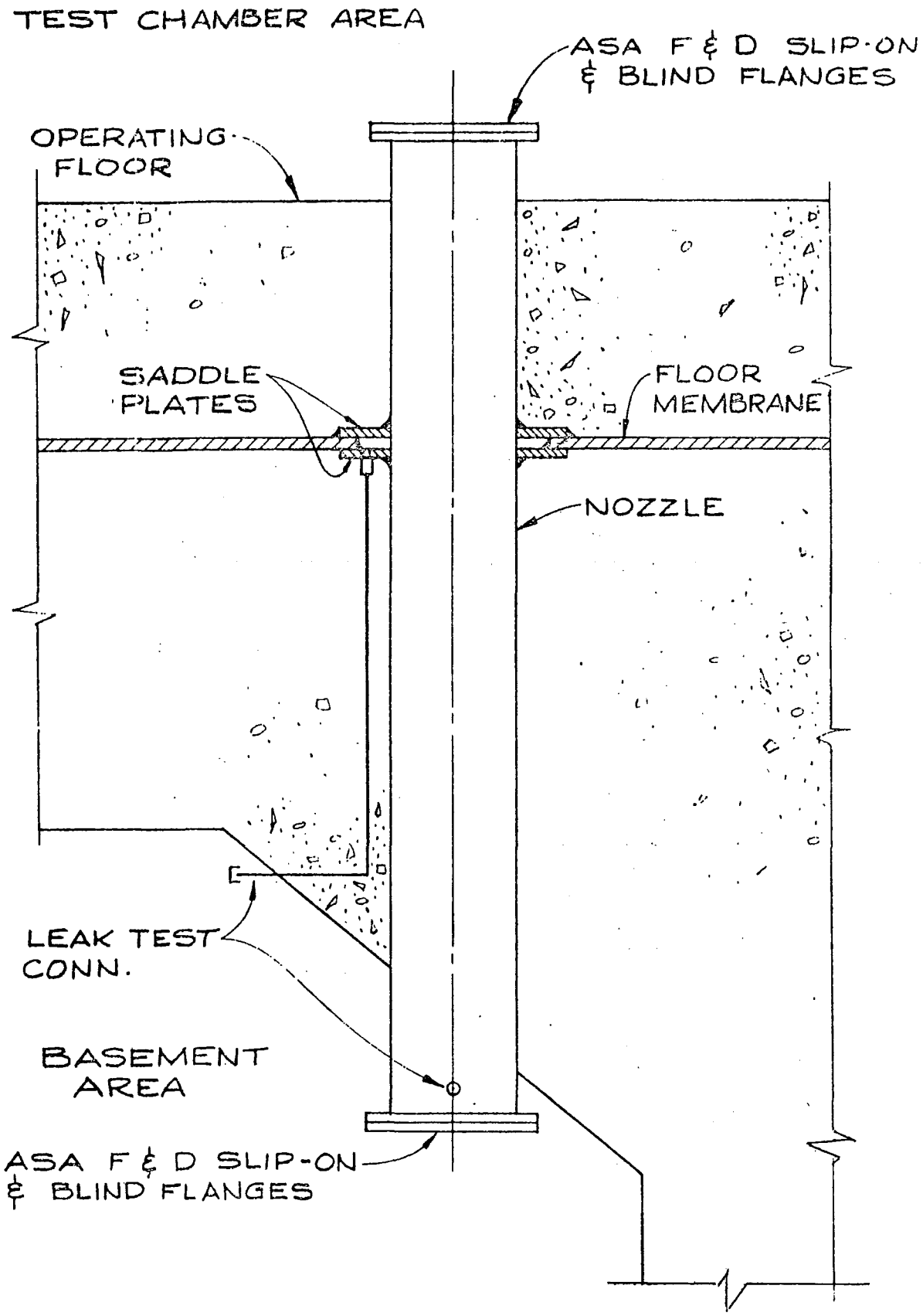


FIG. 6-7 FLOOR MEMBRANE PIPE PENETRATION.
(LTR 1217-3, B)

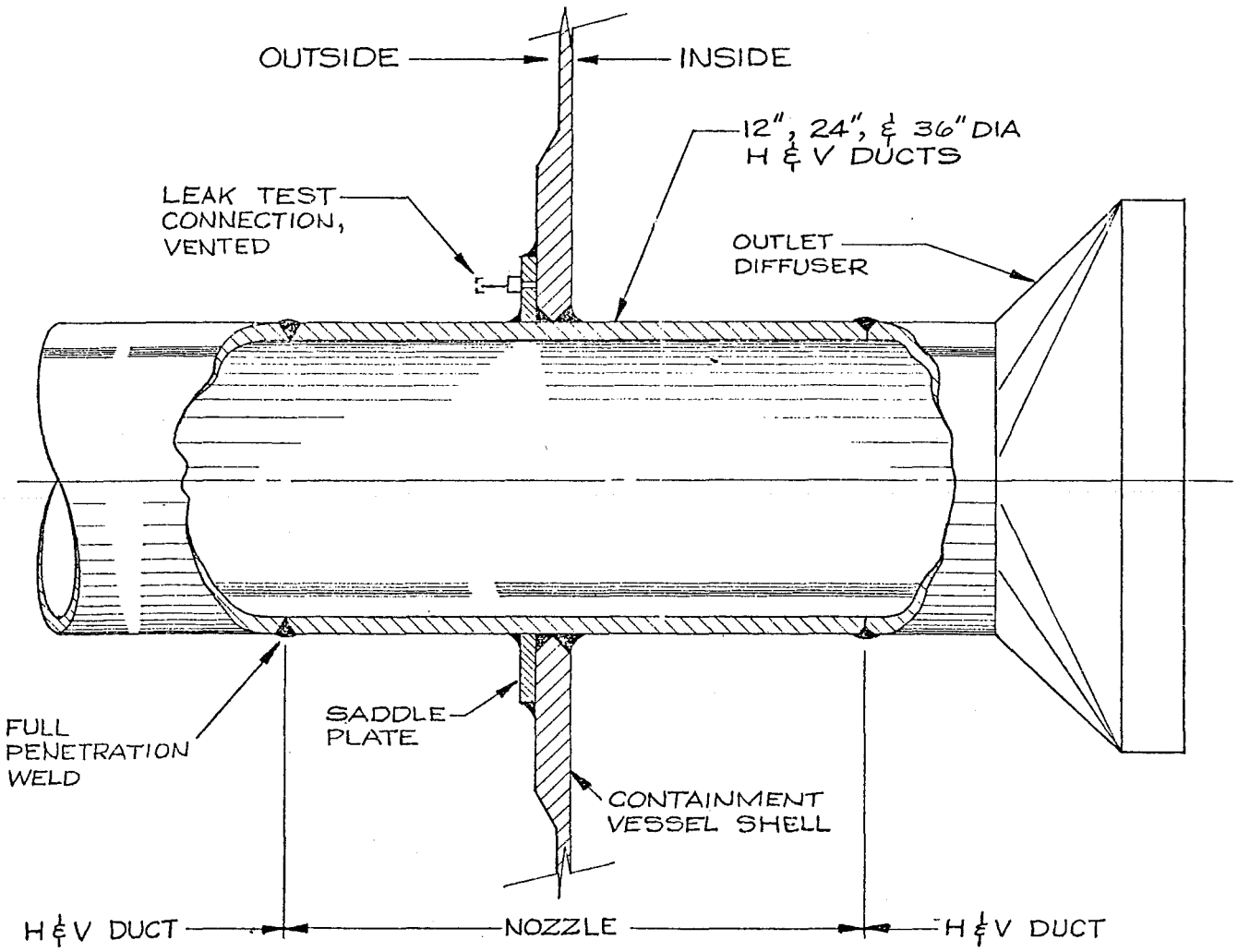


FIG. 6-8 TYPICAL H&V PENETRATION.

(SDD 1,2,17B)

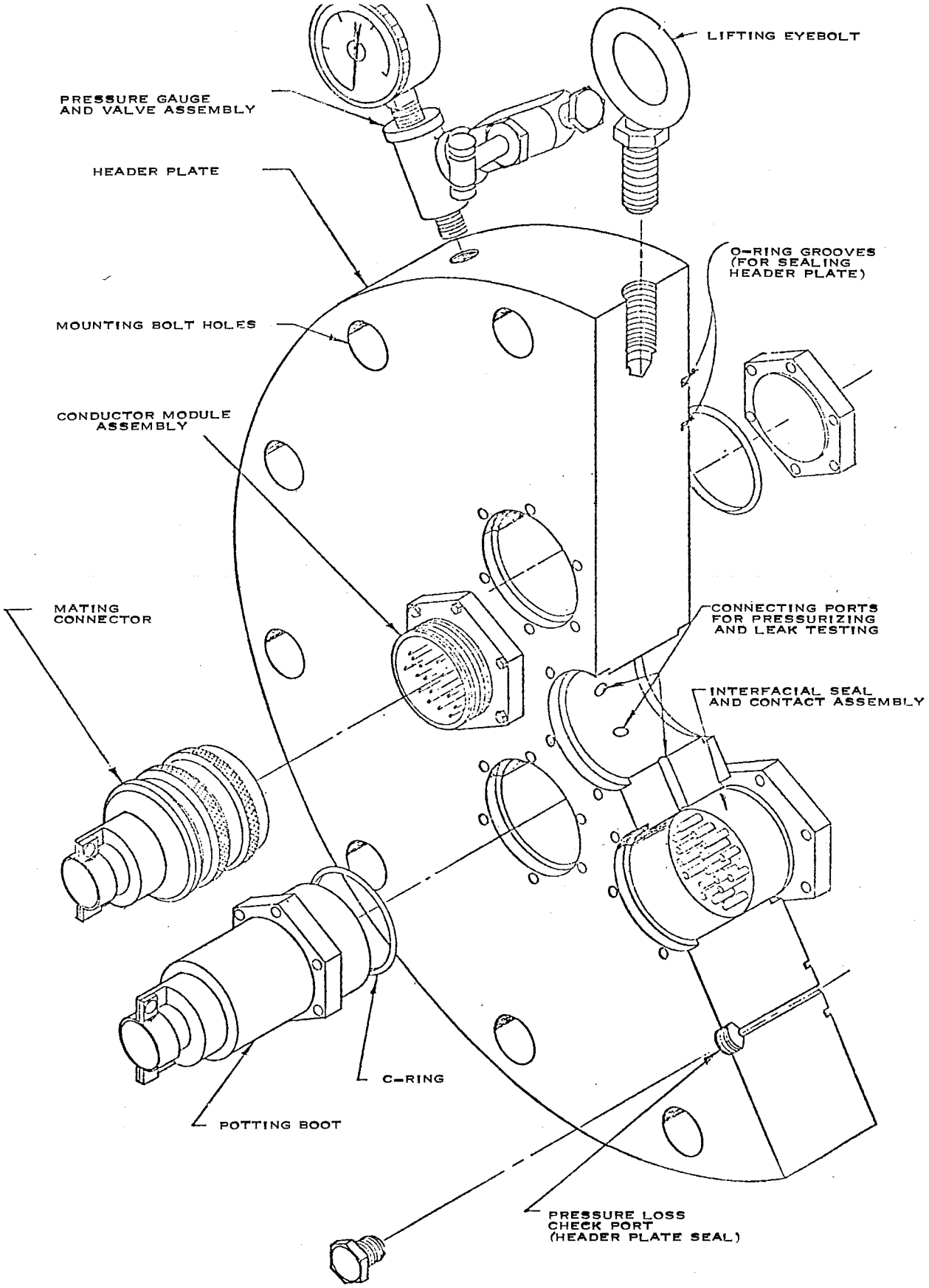


FIG. 6-9 TYPICAL ELECTRICAL PENETRATION FLANGE.

(AMPHENOL FIG. 3 NPD 0367)

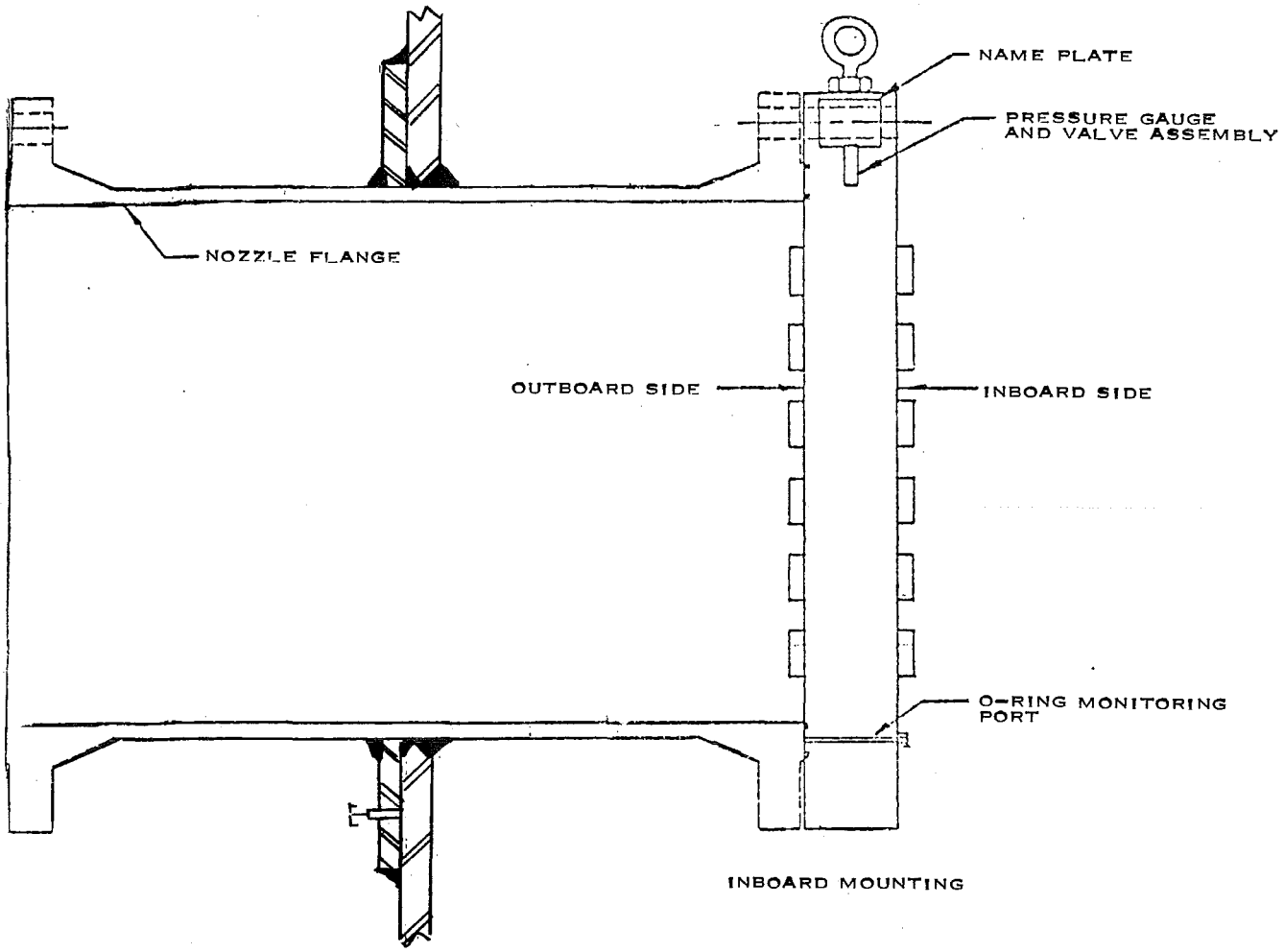


FIG. 6-10 TYPICAL ELECTRICAL PENETRATION MOUNTING (INBOARD)
(AMPHENOL FIG. 4 NPD 0368)

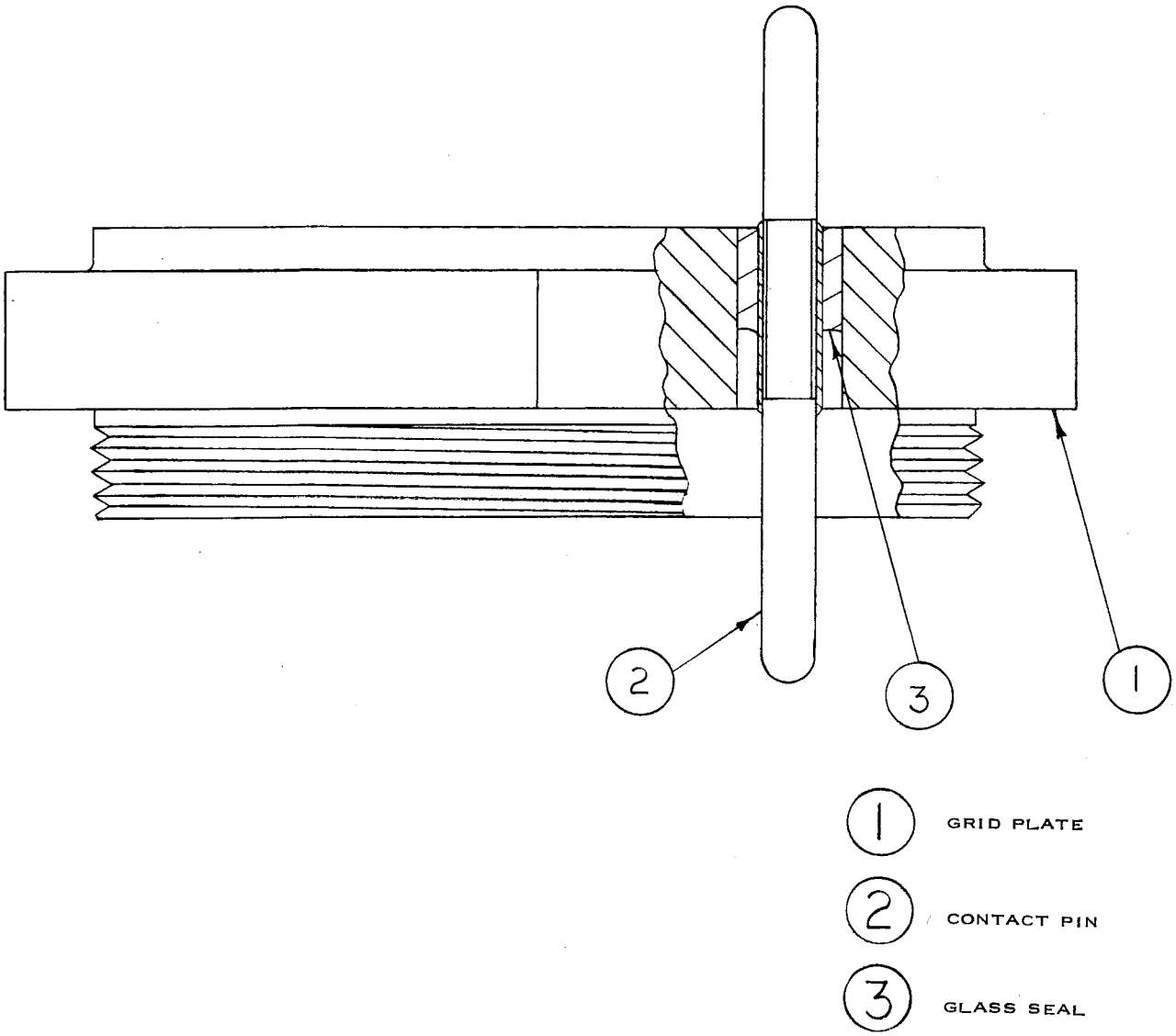


FIG. 6-11 TYPICAL CONDUCTOR MODULE ASSEMBLY-CONTACT PIN SEAL.

(AMPHENOL 205-10330 2/3,R)

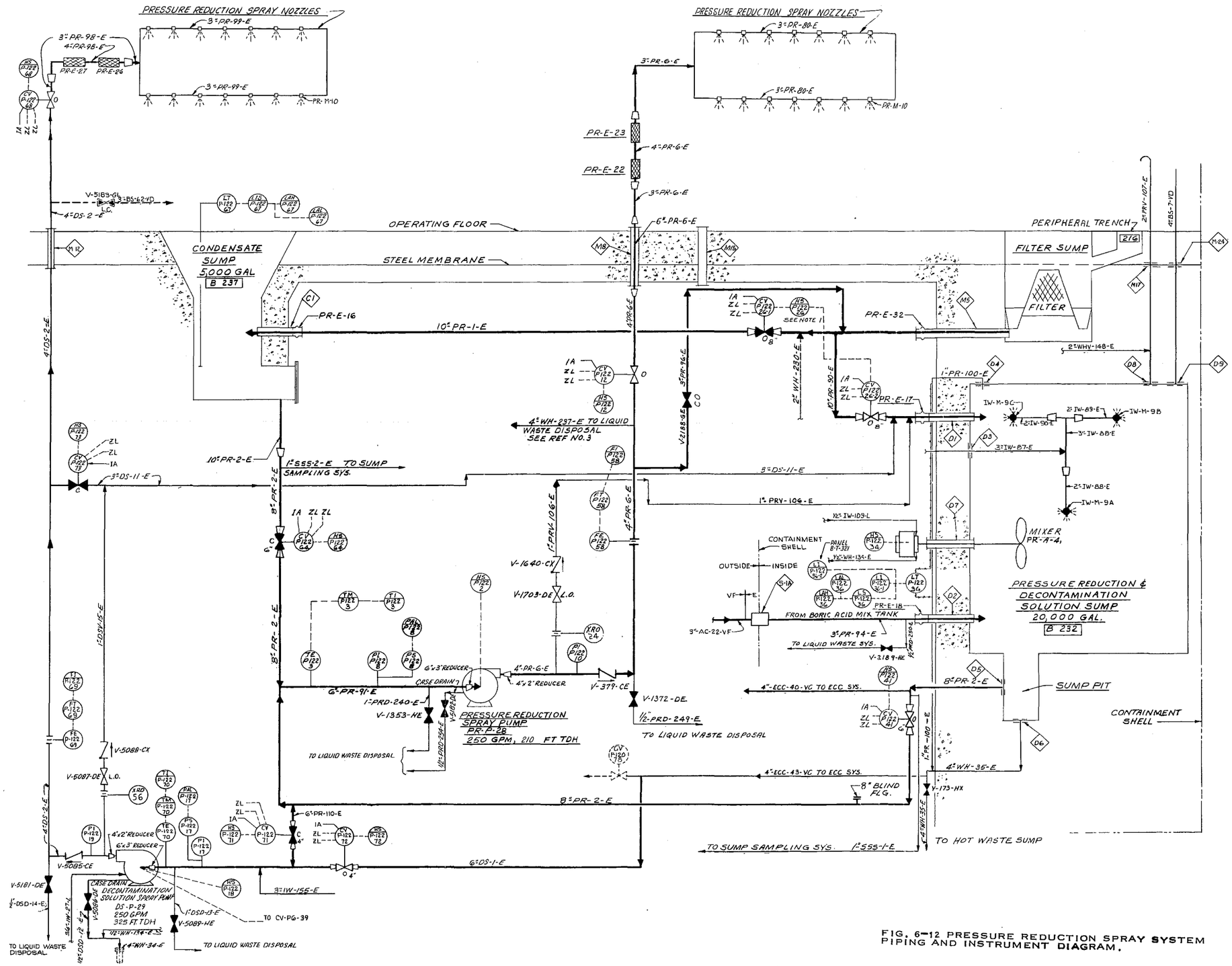


FIG. 6-12 PRESSURE REDUCTION SPRAY SYSTEM PIPING AND INSTRUMENT DIAGRAM.

(650-P-122, D)

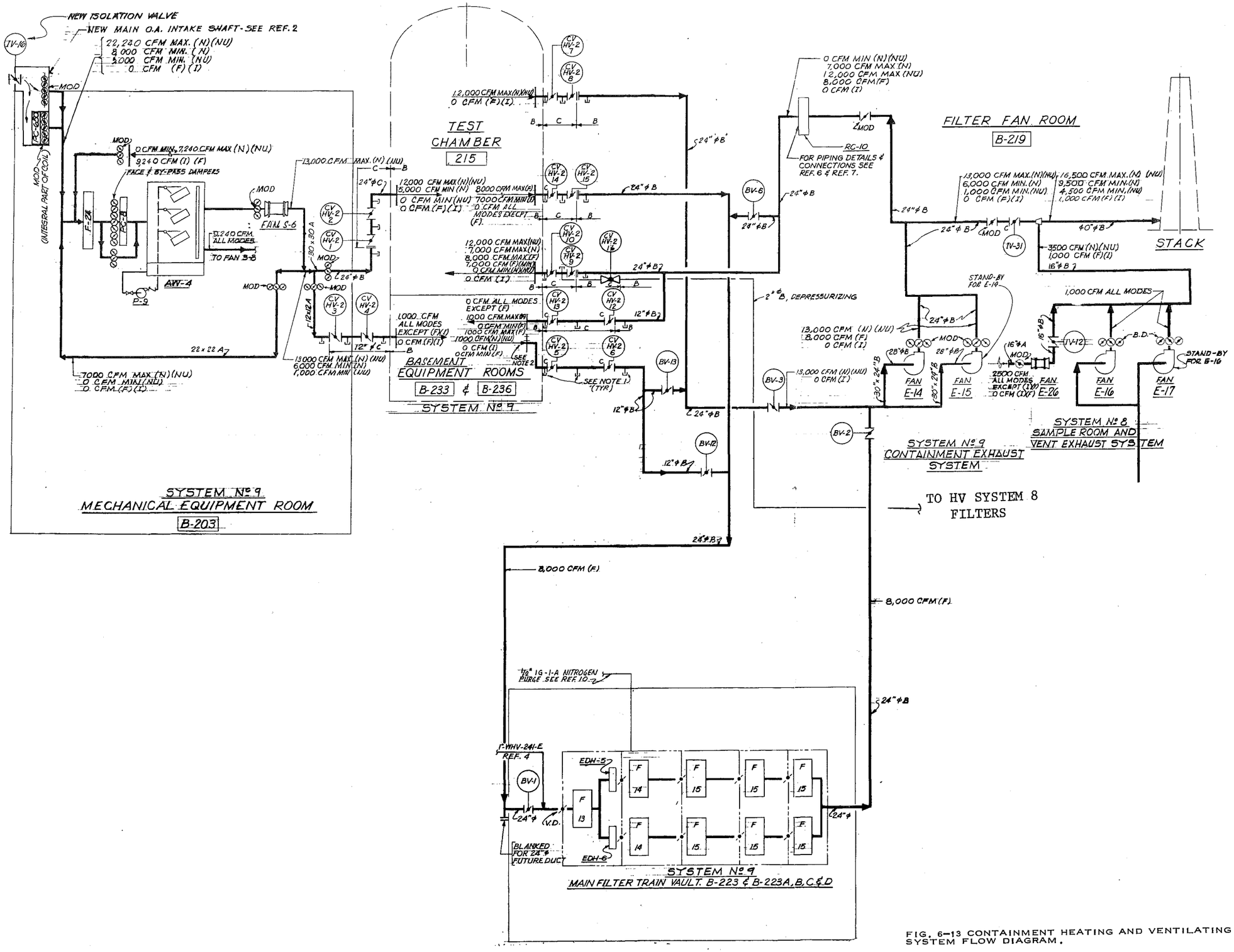


## LEGEND

| | |
|---|---|
| (N) | NORMAL OPERATION |
| (NU) | NUCLEAR OPERATION |
| (F) | FILTERING |
| (I) | ISOLATION MODE, BLDG. 650 |

## GENERAL NOTES:

1. INSTALL 1/2" CAPPED PIPE TEST CONNECTIONS FOR LEAK TESTING.
2. TEST CHAMBER BASEMENT WILL BE ISOLATED DURING (F) OPERATION MODE UNLESS THE BASEMENT REQUIRES A (F) CLEAN-UP OPERATION.

FIG. 6-13 CONTAINMENT HEATING AND VENTILATING SYSTEM FLOW DIAGRAM.

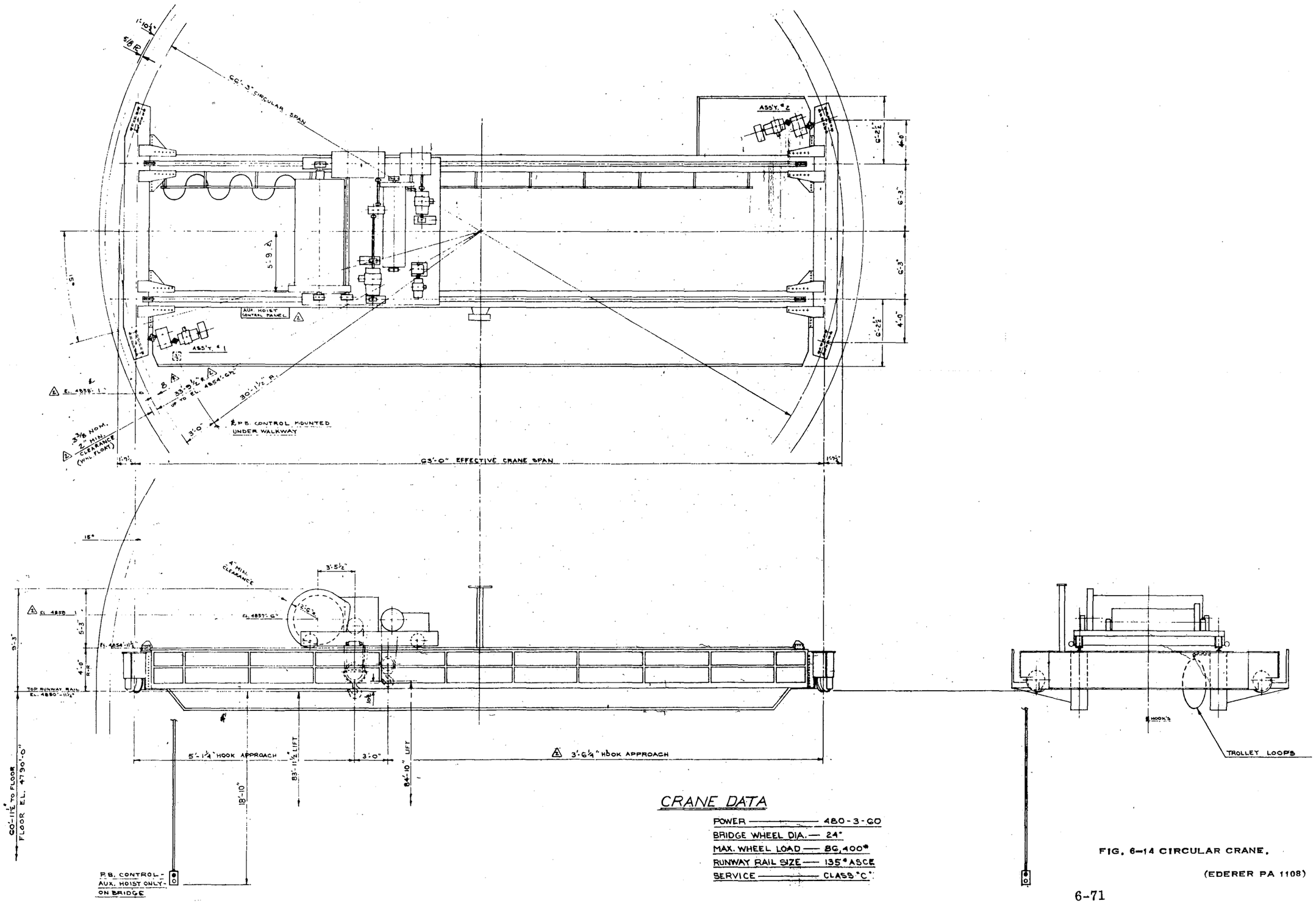


## CRANE DATA

POWER — 480-3-60
BRIDGE WHEEL DIA. — 24"
MAX. WHEEL LOAD — 86,400#
RUNWAY RAIL SIZE — 135# ASCE
SERVICE — CLASS "C"

FIG. 6-14 CIRCULAR CRANE.

(EDERER PA 1108)

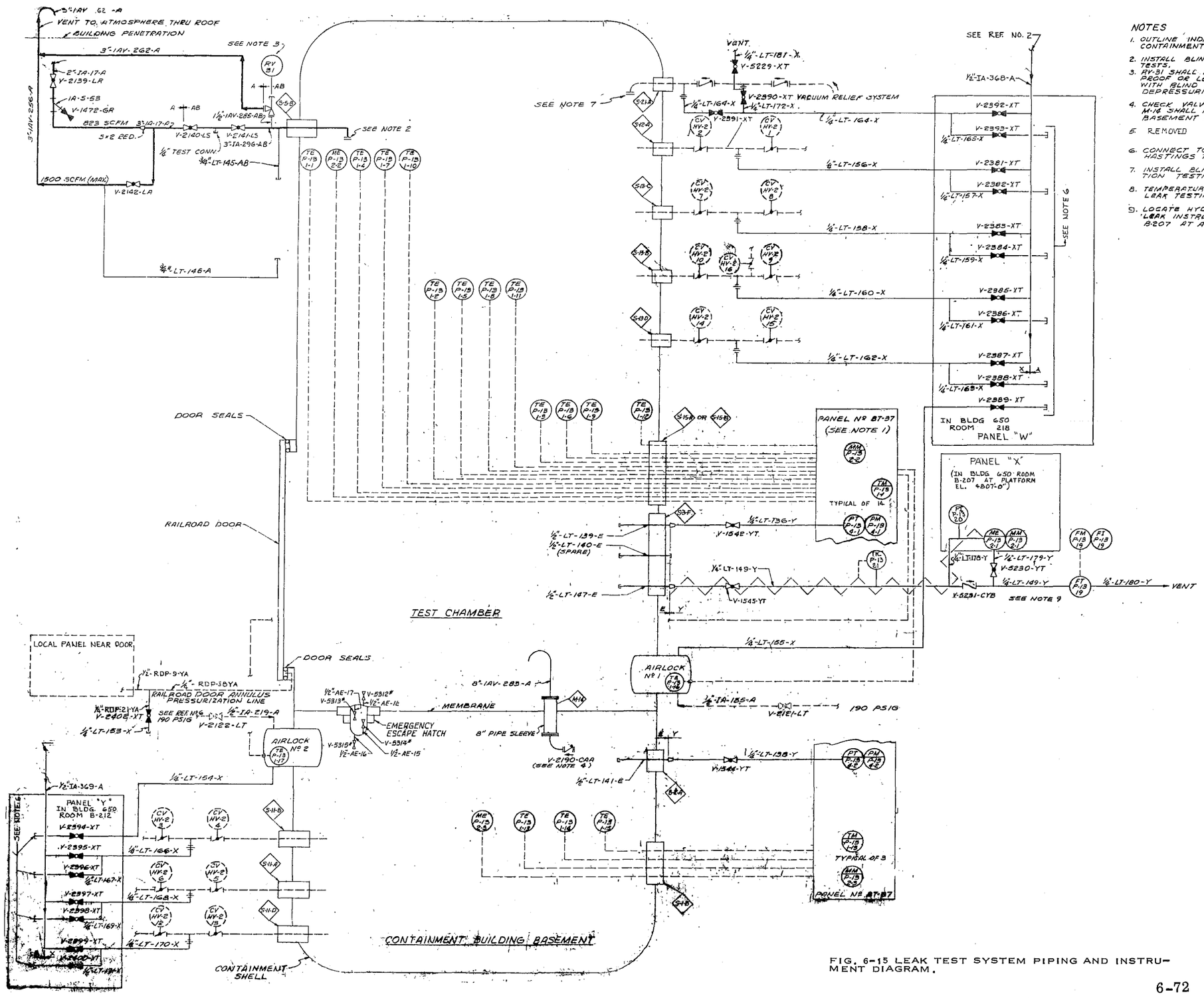


NOTES

1. OUTLINE INDICATES INSTRUMENT PANELS IN CONTAINMENT TOWER ROOM 218.
2. INSTALL BLIND FLANGE OR CAP BETWEEN LEAK RATE TESTS.
3. RV-31 SHALL BE INSTALLED ONLY PRIOR TO A PROOF OR LEAK TEST & SHALL BE REPLACED WITH BLIND FLANGES IMMEDIATELY FOLLOWING DEPRESSURIZATION.
4. CHECK VALVE V-2190-CAA ON PENETRATION M-14 SHALL BE REMOVED DURING THE BASEMENT PRESSURIZATION TESTS.
5. REMOVED
6. CONNECT TO PRECISION PRESSURE GUAGE OR HASTINGS MASS FLOW METER WHEN REQUIRED.
7. INSTALL BLIND FLANGE DURING REQUALIFICATION TESTING OF VALVES.
8. TEMPERATURE ELEMENTS USED ONLY DURING LEAK TESTING OF AIRLOCKS.
9. LOCATE HYDROMETER AND SUPERIMPOSED LEAK INSTRUMENTS IN BLDG. 650 ROOM B-207 AT APPROX. ELEV. 4810.

FIG. 6-15 LEAK TEST SYSTEM PIPING AND INSTRUMENT DIAGRAM.



(650-P-13, L)

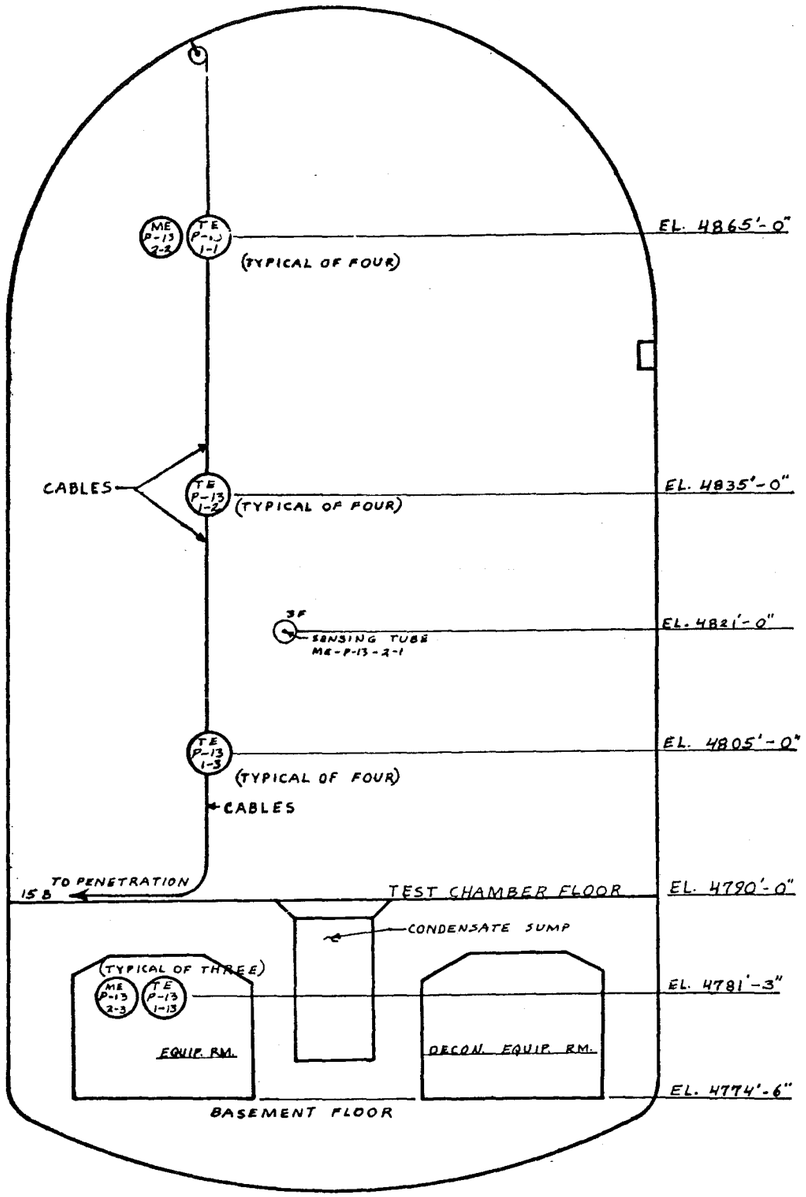


FIG. 6-16 ELEVATION OF LEAK TEST INSTRUMENTATION IN CONTAINMENT VESSEL.
(SDD 1.2.6C)

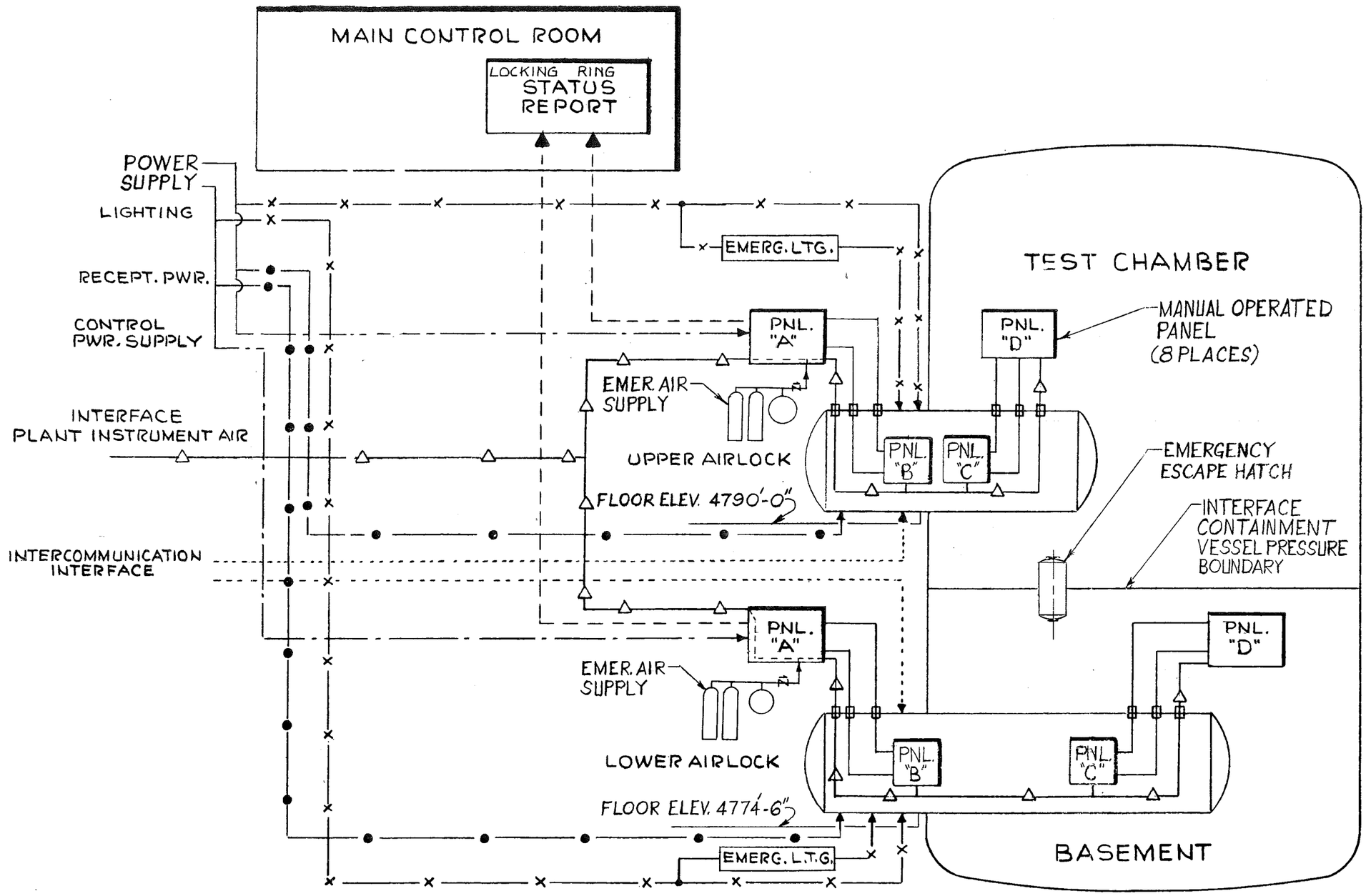


FIG. 6-17 CONTAINMENT PERSONNEL AIRLOCK SYSTEM.

(SDD 1.2.14A, M)

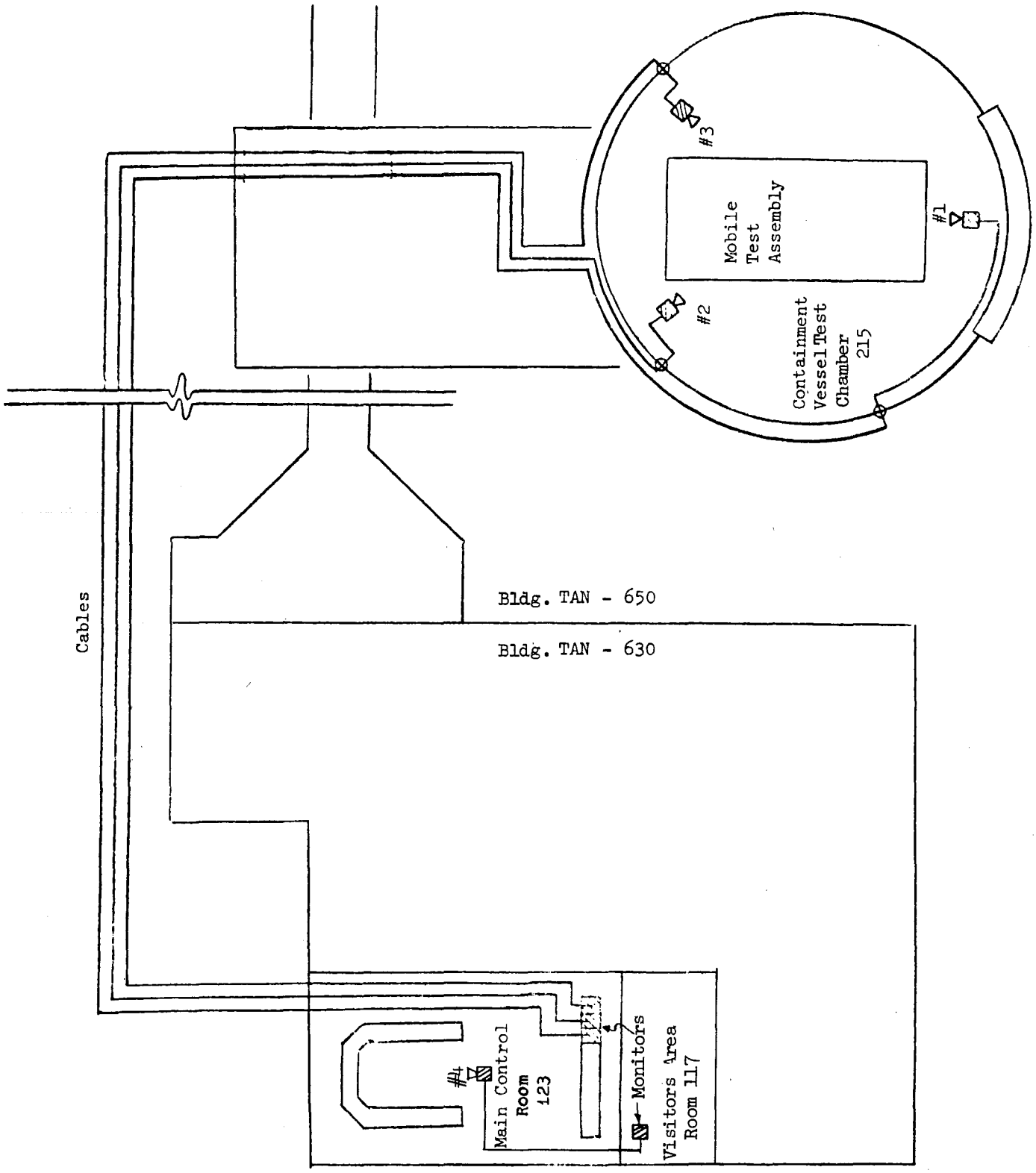


FIG. 6-18 TV SYSTEM LAYOUT.

(SDD 1.3.21A, M)

## APPENDIX 6-A

## CONTAINMENT MECHANICAL DESIGN AND ANALYSIS

This appendix describes the various major mechanical items which are incorporated into the LOFT containment vessel, their basic operating features, and criteria upon which their design is based.

### 6.A.1 Railroad Door and Bridge

The railroad door is a gastight steel box reinforced with a steel plate gridwork measuring 39 ft 5 in. high by 39 ft wide by 4 ft 6 in. thick, as is shown in Figure 6-A-1. Its purpose is to cover the 33-ft-high by 22-ft-wide access opening in the containment vessel. An electrically operated pneumatic sealing system is provided to maintain the vessel integrity during tests.

The door is provided with an electrically operated transport system for moving it aside from the vessel opening. The door travels in a circumferential arc partially encompassing the vessel on a railroad truck support system guided by rails.

A bridge is attached by a towbar to the west end of the door structure on a similar support system. Movements of the bridge are controlled by the door motion. When the door is in the open position, the bridge is centered and locked at the vessel access opening to provide a means for moving the MTA into and out of the vessel test chamber.

#### 6.A.1.1 Support and Transport System

The door is supported by four railroad truck assemblies and held in vertical alignment by six wheel assemblies mounted on top of the door structure.

The trucks ride on rails attached to the door frame clamp section of the vessel and a concrete foundation partially encircling the vessel. The top wheel assemblies bear against rails attached to the door frame and the enclosure framing structure.

The door is moved to the opened or closed position by an electrically operated and controlled winch-cable arrangement. Bumpers are provided at each end of the door travel. An emergency cable and block arrangement utilizing an external

power source is provided for opening the door in the event of a power failure.

The railroad bridge assembly is supported by two railroad truck assemblies and is attached to the door by a towbar arrangement. It is moved into position by the door as the door is opened and is returned to its storage position by the door upon closing of the door. When the bridge is brought into position in front of the vessel access opening, it is locked by two electrically controlled, pneumatically operated locking pins to prevent any movement.

6.A.1.1.1 Rails

The lower rails, which are installed at elevation 4782 ft 10 in., are 171-lb AISC standard sections. They encompass an arc running from LOFT S 86° E to LOFT S 68° W past the door opening and approach apron. The track gauge is 4 ft 6 in. (centerline-to-centerline rail), and the gauge centerline is on a 40-ft-4-1/2-in. radius. The maximum support spacing is 26-1/2 in., with grout furnished between supports. Keys are provided at strategic locations to prohibit tangential motion of the rails. Fabrication and erection tolerances ensure no adverse conditions on the door operational equipment. A conservative design analysis ensures the adequate strength of the rails and their connections.

The upper rails are installed with their centerlines at elevation 4827 ft 1-3/4 in. and are 85-lb ASCE standard sections. Face-to-face dimension of the rails is 3 ft 4-5/8 in., with the centerline of the two-track system at a radius of 40 ft 4-1/2 in. The rails are mounted on 8WF24 beams, which in turn are supported by the door frame and enclosure framing. Sliding connections are provided where necessary to ensure no harmful effects to the rail during vessel displacements. The design analysis shows the adequacy of the rail and its support system.

6.A.1.1.2 Door Trucks

The door is supported by 24 elastomeric bearing pads, 6 mounted on each of the four railroad-type truck assemblies. The bearings permit the door to be moved radially away from the vessel to bear against the outer door frame support forgings in the sealed position. The bearings accommodate all misalignment conditions resulting from construction tolerances and changes of temperature and pressure, as well as differences in position due to rolling on the track. The bearing design considers an accumulation of these lateral displacements in addition to the vertical displacement imposed by the weight of the door and creep over the facility life of 30 years.

The bearing assemblies are built up from five laminations of 60-durometer, 3/4-in.-thick neoprene, hot-vulcanized to four 16-gauge steel separators and the top and bottom mounting plates.

A cam roller is used in place of the conventional kingpin arrangement. The assembly is fixed to the door underside, and the cam rides in a groove on the truck -- allowing lateral displacement of the door with respect to the trucks for sealing purposes while providing positive engagement of the door to the truck during circumferential motion.

The trucks are provided with double-flanged wheels which run on the outside track and flangeless (flat-faced) wheels which run on the inside track. Wheel axles are mounted on the trucks parallel to the radius of the containment vessel to minimize friction. Anti-friction roller bearings are mounted internally on the wheels. To ensure proper lateral alignment, flanged wheels are machined to permit a maximum total side movement of 1/4 in. All wheel tread diameters are

mated to the same "tape" size, allowing a minimum of vertical misalignment.

The two end trucks are provided with rail sweeps at their leading edges, ensuring a debris-free surface of rolling contact.

The body of the trucks is of welded plate construction. Fabrication tolerances ensure congruency among the four trucks. Design permits access and removal of wheels and bearings for maintenance with a minimum of truck disturbance. Wheels, bearings, and all components are designed to resist prolonged static loadings and loadings due to seismic disturbances.

6.A.1.1.3 Top Guide Assemblies

The door is held in vertical alignment at the top by six wheel assemblies mounted on the top surface of the door. Wheels of the assemblies bear against 85-lb ASCE rails. Each assembly is independent and removable for maintenance.

Each unit is comprised of a combination of shear and compression bearing pads to accommodate the lateral motion and various forms of misalignment which may occur in the door. The bearings are designed in such a way that the lateral force required to deflect all of them is approximately equal to the lateral force to deflect the pads at the door bottom an equal amount of displacement. Thus, the door is maintained in a constant vertical position.

The shear bearings are comprised of 60-durometer, 3.75-in.-thick neoprene, hot-vulcanized to 5/8-in. steel end mounting plates. The compression bearing pads are comprised of four laminations of 60-durometer, 1-in.-thick neoprene, hot vulcanized to three 16-gauge steel separators and 1/2-in. steel end mounting plates.

Each guide assembly consists of two flat-faced wheels which permit unrestricted vertical movements. Wheel tread diameters are mated to the same tape size, permitting maximum uniformity. Antifriction bearings are mounted internally on the wheels. Wheels, bearings, axles, and all components are designed to resist maximum lateral loads imposed by the door motion.

6.A.1.1.4 Drive System

The drive assembly is a two-way car puller consisting of a 5-hp motor with integral brake and primary and secondary reducers. The drum is mounted on a shaft extension of the secondary reducer equipped with an antifriction outboard bearing assembly. A manually operated quick-disconnect coupling is located between the motor and primary reducer to permit free-spooling of the drum in the event it is required to move the door by an auxiliary means. A torque coupling is located between the primary and secondary reducers to limit the output torque of the unit to an equivalent pull of 50,000 lb.

These components are mounted on a common base fabricated of structural shapes and plates. The base is in turn mounted on the concrete foundation provided in the machinery room.

One 1-1/8-in.-diameter cable of 6 x 19 extra improved plow steel with independent wire rope core (IWRC) is mounted on the drum in such manner that while one end is being reeved on the drum, the other end is unreeved. One end of the cable is attached to the east end of the door and closes the door, which simultaneously drives the bridge into its stored position. The other end of the cable is attached to the west end of the door and opens the door, which pulls the bridge into position in front of the vessel access opening.

Sheaves, pulleys, and channels are provided for supporting and guiding the cable. The attachments to the door are spring-loaded and facilitate slack takeup.

The maximum cable speed is 4 ft/min. Unsealing and moving the door to its fully opened position is accomplished in less than 1/2 hr. The drive system is designed to accelerate, drive, and decelerate the combination of the railroad door and bridge without excessive stresses on the components.

6.A.1.1.5 Towbar

The bridge is connected to the door by a spring-loaded towbar assembly. The spring provides an allowance for overtravel of the door after the bridge has reached its operating position. Pins are provided at the door and bridge connections to facilitate disassembly when required. The towbar is designed to sustain loads in excess of that imposed by the stalling torque of the drive system.

6.A.1.1.6 Bumpers

Bumpers are provided at each end of the door travel. The bumper at the east end of the door travel is removable to allow the door to travel past its fully opened position for maintenance requirements. The bumpers are constructed of structural shapes and are provided with neoprene elastomers to absorb the kinetic energy of the moving door.

The bumpers are designed to withstand loads imposed by the moving door and the operating drive system. They are also designed to withstand seismic loading created by the combination door and bridge.

6.A.1.1.7 Emergency Door Pulling

In the event of total failure of the normal operating system, the door and bridge can be brought into the fully opened and operating position through the use of

an emergency system consisting of door connection, cable, snatch block, and an external power source.

The emergency cable, conveniently located in the door enclosure building, is 1-1/8-in.-diameter, 6 x 19 cable with swaged socket connectors at each end. In event of emergency, the cable is attached to the door shackle, threaded through the snatch block mounted on the concrete end wall of the door enclosure area, and passed through the outside enclosure wall to an open area accessible to a mobile vehicle.

All accessories are designed based on the cable breaking strength, which far exceeds the required opening force.

6.A.1.1.8 Bridge Structure

The bridge travels in a trench at the vessel opening and, when brought into position through the motion of the door, is the means by which the shielded locomotive and reactor dolly cross over the door trench and pass into the containment vessel test chamber.

The bridge is a steel box-like structure filled with concrete. The top surface of the bridge is flush with the floor of the test chamber and the paved approach apron outside the vessel. A 100-lb four-rail track is embedded in the bridge concrete in the same manner as the track inside the vessel. The gap between the bridge track ends and the approach and vessel floor track ends is approximately 1/4 in. Personnel guard-rails are installed at both ends of the bridge and on adjacent floor areas to prevent personnel from falling into the trench.

A mechanical stop attached to the bridge and trench wall is used to properly align the four rails. Recessed, reinforced openings in the side of the bridge embrace

remotely controlled keys which enter to fix the final position of the bridge during operation.

The design of the bridge considers the worst loading condition imposed by the weight and dynamic actions of the dolly reactor and locomotive coupled with loads resulting from seismic conditions.

6.A.1.1.9 Bridge Trucks

The bridge is supported by eight elastomeric bearing pads, four mounted on each of the two railroad-type truck assemblies. The bearings permit close alignment of the bridge deck structure and rail segments to the containment vessel and approach apron four-rail track system. The bearing pads are built up from one piece of 60-durometer, 7/8-in.-thick neoprene, hot-vulcanized to the top and bottom steel mounting plates.

The trucks are provided with double-flanged wheels which run on the inside track and flat-faced wheels which run on the outside track. Wheel axles are mounted radially with respect to the vessel centerline to minimize friction. Antifriction bearings are mounted externally on the wheels. To ensure proper lateral alignment, flanged wheels are machined to permit a maximum total side movement of 1/4 in. All wheel tread diameters are mated to the same "tape" size, allowing a minimum of vertical misalignment.

The trucks are provided with rail sweeps at their leading edges to ensure a debris-free rolling surface.

The body of the trucks is of welded structural-shapes construction. Fabrication tolerances ensure congruency between the two trucks. The design permits access and removal of wheels and bearings for maintenance with a minimum of truck disturbance. Wheels, bearings, and all components are designed to resist prolonged static loads and loads due to seismic disturbances.

6.A.1.1.10 Bridge Locking Keys

In order to prevent movements and misalignment of the bridge in the operating position, two electrically controlled and pneumatically operated locking keys are provided. The two independently controlled locking keys are located within the pavement over the lower door clamp outside the trench area. The keys are operated by pneumatic cylinders which engage them into keyways located in the bridge sidewalls.

The housings for the cylinders and keys are equipped with removable covers for easy access and maintenance. The covers are sealed to exclude debris and weather. Each housing unit is equipped with heating elements to prevent mechanism freezeup during cold weather. With the cover removed, the keys may be removed vertically in the event they should jam and prevent operation of the bridge.

The design includes the use of cam followers as key guides to minimize friction and, therefore, power requirements. The design analysis of all components is based upon loadings created by seismic conditions which may occur during the bridge operation.

6.A.1.2 Enclosure Framing

The railroad door and bridge enclosure is a shed-type addition to the containment vessel enclosing the door-bridge trench area and the door frame structure in an arc running from LOFT N 90° E to LOFT S 69° W. The enclosure is a steel-framed structure sheeted over with corrugated galvanized sheet metal and insulated for weather protection. A minimum temperature of 50°F is maintained within the enclosure.

6.A.1.2.1 Weather Seal Mounting Plane

Included in the enclosure framing design is the upper mounting plate for the weather seal. This consists of a number of brackets equally spaced on approximately

6-ft centers which are attached to the header clamp section of the door frame. The design includes dead and live loads with allowances made to accommodate header movements while the vessel is in use.

6.A.1.2.2 Entrance Columns

The door frame enclosure entrance columns are treated separately in the enclosure design analysis. In addition to being designed for accompanying dead and live loads, the columns are designed with loading received from the header clamp deflection. Another purpose of the columns is to provide support of the vertical sections of the weather seal mounting plate.

6.A.1.2.3 Guide Beam Supports

The door guide beam supports are located at elevation 4828 ft 8-1/4 in. and are attached to the outside of the vessel shell and the enclosure framing structure. They support the rail sections (outside the door frame area) by which the top of the door is kept in vertical alignment in its traverse about the vessel. They are designed to withstand static, dynamic, and earthquake loadings transmitted from the door structure. Connections provide allowances for vessel movements with no horizontal loadings being transmitted to the enclosure structure.

6.A.1.2.4 Enclosure Structure

The enclosure columns are located in a radius of 48 ft 4-1/8 in. from the vessel center, equally spaced on 15° arcs. They are anchored on a 2-ft-thick concrete wall, which in general follows the enclosure outline. Struts and wind bracing are provided at strategic locations to ensure adequate load-carrying capabilities. Girts are provided at approximately 6-ft centers for the attachment of the siding, with their design allowing for dead load and wind load.

The enclosure roof consists of rakers and purlins spaced and designed for the support of the roof decking and roof loads. The rakers are the means by which the column tops are connected to the vessel and are, therefore, designed to include loads from the columns. Connections provide for vessel movements without imposing high loads on the frame structure.

6.A.1.3 Door Sealing System

The railroad door sealing system consists of two pusher tubes, two pressure seals, and one weather seal. The material, construction, and cross-sectional configuration are identical in all seals.

The sequence of operation for sealing the door is as follows:

(1) Inflate the pusher tubes
(2) Inflate the "inner" pressure seal
(3) Inflate the "outer" pressure seal
(4) Deflate the pusher tubes
(5) Inflate the weather seal.

The sequence of operation for unsealing the door is as follows:

(1) Inflate the pusher tubes
(2) Deflate the pressure seals
(3) Deflate the pusher tubes
(4) Deflate the weather seal.

The pusher tubes and pressure seals are mounted on plate structures attached to the containment vessel railroad door frame. The pusher tubes are mounted vertically on each side of the door opening, and the pressure seals are mounted concentrically about the door opening.

To preclude excessive abrasion action which may be detrimental to the sealing surface of the pressure seals, the pusher tubes are inflated to a predetermined and set pressure for the purpose of moving the door structure radially outward from the travel position to the clamp stop and sealing position.

The annulus of the concentric pressure seals can be pressurized to monitor a leakage across the inner door seals.

The weather seal mounting is concentric about the door opening of the approach apron. The mounting plate is attached to the door frame clamp section and the door frame entrance enclosure columns. As its name implies, the purpose of the weather seal is to fill the gap between the door and the outside frame at the time when the door is in the closed and sealed position, protecting the enclosure room from the outside elements. The weather seal has the capability of aiding the door in returning to its proper travel position between the frame and clamp section if required.

Prepared sealing surfaces are attached to the inner and outer skin plates of the railroad door in line with their respective seals.

6.A.1.4 Door and Bridge Controls

The railroad door and bridge operating and control system is designed in such a manner that all sequential functions require a manual positioning of a control switch; however, all functions are electrically interlocked to prevent personnel injury or component damage. The necessary control switches, controllers, readout devices, and annunciator inputs for complete operation and monitoring of the door and bridge are provided in the railroad door machinery room.

6.A.1.4.1 Electrical Control Panel

Control switches are provided for complete operation of the railroad door sealing system, the opening and closing of the door to within 3 in. of its fully opened and fully closed position, and the locking and unlocking of the railroad bridge in position at the vessel reactor accessway. A maintenance selector switch permits control of the railroad door between the fully opened position and the maintenance position of the railroad door.

Status lights are provided to indicate each function of the door operation and the function completion in addition to "Power On".

Pushbuttons are provided for moving the railroad door its final 3 in. of travel to the fully opened or fully closed position in small increments. Also, pushbuttons are provided to move the railroad door into and out of its maintenance position, which is approximately 5 ft past the fully opened position, in a similar manner.

A power switch is provided to control the power to all circuits which are controlled from the panel. The position of the switch does not affect the status lights or readings of pressure gauges.

6.A.1.4.2 Pneumatic Control Panel

Instruments are provided to indicate the pressure in the pusher tubes, pressure seals, weather seal, and seal annulus. These instruments are direct-reading pressure gauges.

Solenoid valves are provided for the inflating and deflating of the pusher tubes, pressure seals, and weather seal, and for the pressurizing and depressurizing of the seal annulus.

Pressure switches are provided as required for the interlocking between the various components of the railroad door control system.

6.A.2 Cushions at Steel-Concrete Interfaces

A compressible material is provided at all steel-concrete junctions in the vessel where the differences in the displacements of the two materials with respect to each other would otherwise create high local stresses. The areas for which compressible material was designed and furnished include:

(1) Basement penetration nozzles

(2) Membrane attachment ring

(3) Basement airlock

(4) Exterior vessel face below elevation 4790 ft

(5) Interior vessel face below grade elevation in the area of the door frame.

A design analysis for the cushions has been performed which gives a detailed review of each of the above areas, including complete material description.

6.A.3 Dome Platform and Access Ladder

A 7-ft-6-in.-diameter platform is provided at the apex of the vessel dome for access to, and maintenance of, external vessel instrumentation. The platform is equipped with handrail, grating floor, and bosun chair support ring. The access opening in the platform handrail is equipped with a 1/4-in. proof coil safety chain. The ladder to the dome platform is located on the north side of the vessel over the roof of the preamp room, beginning at elevation 4831 ft 9-1/2 in. The ladder is provided with a "Saf-T-Climb" fall-prevention device.

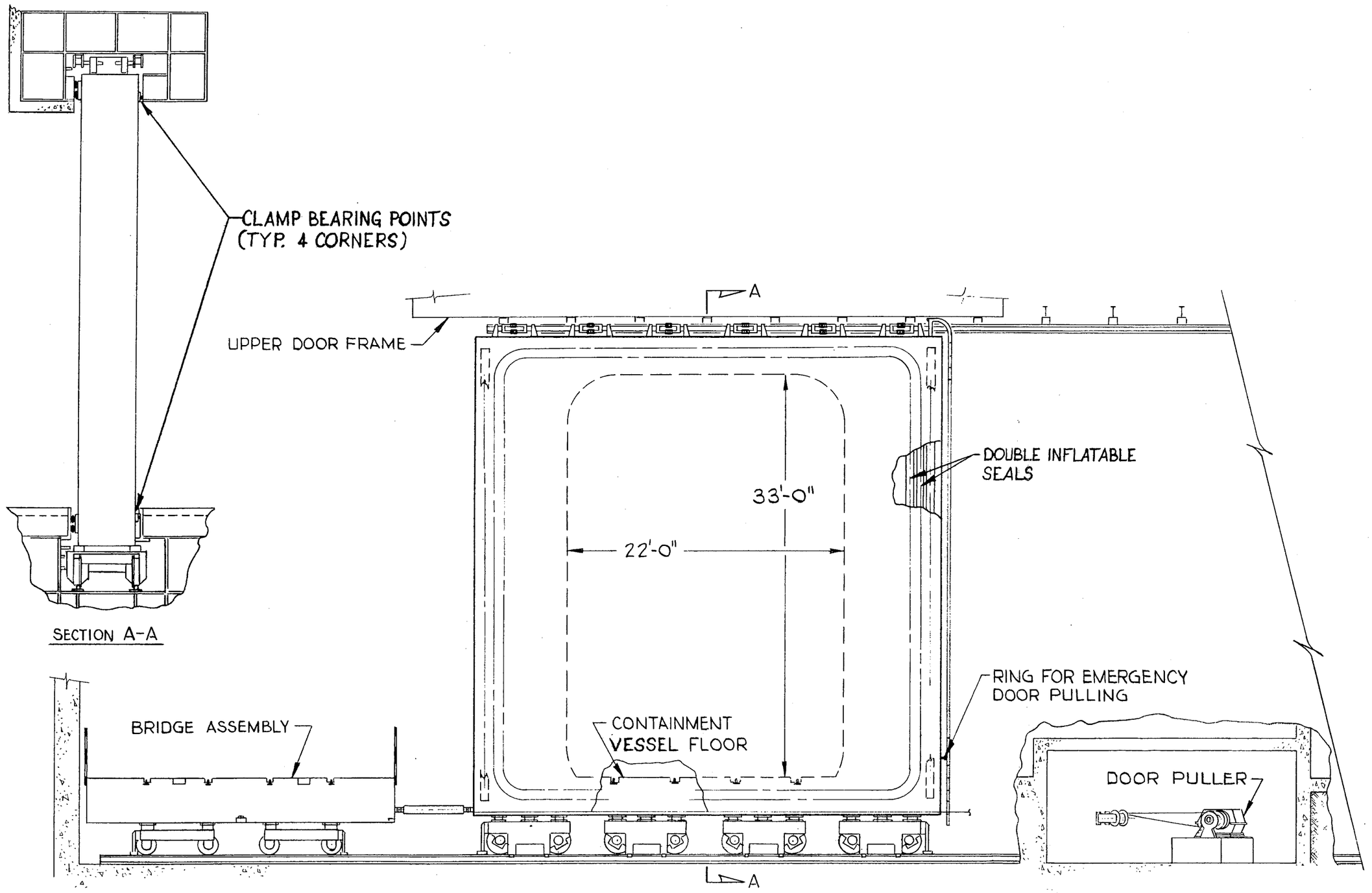


FIG. 6-A-1 CONTAINMENT RAILROAD DOOR AND BRIDGE.

## APPENDIX 6-B

## CONTAINMENT STRUCTURAL STRESS ANALYSIS

The LOFT containment vessel has been designed in accordance with the requirements for Class B nuclear vessels set forth in Section III of the ASME Code. The results of stress analysis performed on the vessel to show that the requirements of paragraph N-142 of the ASME Code are satisfied are summarized below.

This appendix briefly describes the geometrical items which compose the vessel and the means by which they were analyzed.

### 6.B.1 Facility Description

The facility description is given in Appendix 6-A.

### 6.B.2 Stress Analysis

The following discussion of the basic load requirements and the allowable stress limits is followed by a close inspection of the major vessel components and the methods by which they were analyzed.

#### 6.B.2.1 Design Loads

The basic environmental and mechanical load requirements which are to be imposed on the containment vessel are as follows:

(1) Internal pressure
(2) External pressure
(3) Thermal loadings
(4) Snow load
(5) Wind pressure (tornadoes)
(6) Seismic load
(7) Crane load
(8) Seal load
(9) Dolly weight
(10) Deadweight
(11) Equipment loads.

These loads are combined into various "loading combinations" which yield maximum stress intensities. These maximums are then compared with allowable stress intensities for Class B vessels found in Section III of the ASME Code.

6.B.2.2 Design of Major Components

Numerous methods were used to analyze the various components of the containment vessel. Using their finite element computer program, Franklin Institute Research Laboratories (FIRL) resolved a large portion of the analysis through various models[6-B-1]. This program, written by Dr. Zenon Zudans of FIRL, represents the structure as a series of flat quadrilateral finite elements at whose corners displacement continuity and force equilibrium are maintained. Under various loading conditions, stresses, displacements, and rotations were obtained for the several models used.

6.B.2.2.1 Basic Shell Design Remote from Floor

The basic shell consists of a vertical cylinder 1-3/16 in. thick and 70 ft in diameter (see Figure 6-2). A simple stress analysis of this shell can be made by observing that the circumferential stress (i.e., that due to the design pressure) will always be greater than the longitudinal stress.

From ASME Code Section VIII:

$$t = \frac{PR}{S_c E - 0.6P}$$

or

$$S_c = \frac{P(R + 0.6t)}{E^t}$$

where

$t$ = shell thickness = 1-3/16 in.

$p$ = design internal pressure = 36 psig

$R$ = inside radius of the shell = 420 in.

$S_c$ = circumferential stress value present in psi

$E$ = joint efficiency = 1.0

$$S_c = \frac{36\{420 - (0.6)(1.1875)\}}{(1.0)(1.1875)} = 12{,}754 \text{ psi}$$

$$12{,}754 \text{ psi} < 17{,}500 \text{ psi} = S_m = \text{allowable}$$

The above calculation indicates that simple hoop stress is less than the allowable.

Taking into account all the loads, FIRL analyzed the entire cylindrical portion of the shell remote from the door, using their finite element computer program. Their analysis determined force boundary conditions at the top of the cylindrical vessel, while the deflection boundary conditions at the bottom of the shell were obtained from an independent analysis.

A finite element analysis of the cylindrical shell was performed utilizing the above data. Stresses determined were compared with the allowables presented in Section III of the ASME Code and found to be acceptable. A 1-3/16-in. shell, therefore, proved to be satisfactory.

6.B.2.2.2 Top Head and Crane Girder

The top head and crane girder were analyzed simultaneously, assuming an initial head thickness of 5/8 in. The investigation consisted of a series of hand calculations based on the discontinuity or slope deflection method of structural analysis. The top head and crane girder were also analyzed by FIRL using the axisymmetric shell code.

For the hand calculations the upper portion of the vessel was divided into four sections (see Figure 6-B-1). A compatibility matrix equation was developed which would accept any form of loading for the four free sections and determine the discontinuity moments, shears, deflections, and rotations at each junction. Stresses for each type of loading were then combined to obtain the highest possible stress intensities, for comparison with the allowables designated in Section III of the ASME Code.

The results of the analysis show that the top head, crane girder, and upper cylindrical shell designs are adequate and meet the requirements of Section III of the ASME Code. An additional analysis was performed on the crane girder area of the containment

vessel to increase the capacity of the crane. This analysis also indicated that the crane girder and upper cylindrical shell designs are adequate and meet the requirements of Section III of the ASME Code. The FIRL computer code analysis of the top head and crane girder designs confirmed the hand calculations in showing that the structural adequacy of the designs satisfied the requirements of Section III of the ASME Code.

6.B.2.2.3 Bottom Head and Reinforcing Ring

The bottom head and reinforcing ring were analyzed by FIRL using their axisymmetric shell computer program.

An independent analysis was made to acknowledge the validity of the FIRL design by performing a discontinuity analysis for four loading conditions. The results found were in close proximity to those reported by FIRL and, when compared with the ASME Code allowables, were found to be acceptable.

Two other analyses were also performed relative to the bottom head. The first of these examined the local condition between the lower airlock insert plate and the bottom head reinforcing ring. Two models were analyzed using FIRL's finite element computer program. The results show that the stresses due to the design and specified mechanical loads were less than the maximim allowable values stated in Section III of the ASME Code.

The second analysis contains calculations showing that the stability of the inside cylindrical component (Part A of Figure 6-B-2) is assured. This analysis was made assuming that Part A received no lateral support from the adjacent concrete. The results show that, even without lateral support, the stability of the reinforcing

ring is assured, and the reinforcement does indeed act as a support ring.

6.B.2.2.4 Railroad Door

FIRL analyzed the railroad door, using their finite element computer program. The door itself was modeled as a multilayered shell with stiffeners (see Figure 6-B-3) representing the horizontal and vertical diaphragms. The stresses found were less than the maximum allowables designated in Section III of the ASME Code, and the design was found adequate.

The reinforced corner regions of the door were also analyzed by FIRL using their finite element program. The corner panels were represented as single non-layered plates, permitting the state of stress to be obtained in the diaphragms. Again all stresses were found to be less than the stated allowables, and the design was judged adequate.

Insulation requirements were determined by a heat transfer analysis of the door skin plate. Results showed that no insulation was required in order to guarantee steel temperatures above the minimum service metal temperature of -20°F.

The stresses and stress intensities in the welds were determined by first determining the stresses in the plates adjacent to the welds. Following this determination, the stresses in the welds were determined by factoring the stresses in the plates. All stresses were found to be less than the allowables specified; therefore, the welds analyzed were adequate.

6.B.2.2.5 Railroad Door Frame and Transition Regions

The railroad door frame and transition regions (see Figure 6-B-4) were analyzed primarily through the use of FIRL's finite element computer program. Deflection boundary conditions were obtained from their previous shell analysis and thermal data from

the TOSS 1 program. Model 4BBB simulated the final design by analyzing 68° of the cylindrical shell circumference measured from the door centerline. Stresses reported were found to be less than the allowables.

The weld design for the frame and transition regions was based on the results of FIRL's Model 4BBB computer program. The stresses obtained for the plates in Model 4BBB were used in determining the state of stress in the welds. By applying the appropriate weld factors, the stresses in the welds were determined and found acceptable when compared with the ASME Code allowables. The ASME Code requirements were therefore met, and the weld design was considered satisfactory.

6.B.2.2.6 Circumferential Rings

Using their finite element computer program, FIRL analyzed the two circumferential rings (Figure 6-B-5) in their Models 1D and 4BBB. The output from those two models showed that the stresses in each ring were judged satisfactory in meeting the ASME Code requirement and were therefore used for the design.

The welds in the two rings were designed by using the plate stresses obtained from the above models and modifying them with appropriate weld factors. In all cases, the welds designed met all requirements of the ASME Code.

6.B.2.2.7 Nozzles

The Phase I (those below test chamber operating floor elevation) and Phase II (those above test chamber operating floor elevation) nozzles were analyzed for the external, thermal, and pressure loadings. Twelve thermal transients were designated, with the maximum thermal conditions to be determined. Dynatech

Corporation analyzed the stresses resulting from the 12 tables for the Phase I and Phase II nozzles and concluded that Table I offered the maximum thermal stresses and stress differences.

By applying the designated loadings and the transients, the Phase I and Phase II nozzles were designed and analyzed using the SEAL-SHELL-2 computer program and a Bijlaard analysis of the containment shell. The results were adequate relative to the stress requirements of the ASME Code.

6.B.2.2.8 Airlocks

Both airlocks were analyzed for mechanical, thermal, and pressure loadings. As seen from the preceding nozzle discussion, the thermal transients were used for maximum thermal effects.

The SEAL-SHELL-2 computer program was the basic tool used in the airlock analysis. Since the airlock-containment vessel intersection cannot be handled by this program as the axis of symmetry for the airlock and the vessel are not coincident, it was necessary to assume a sphere with an inside radius of 850 in. as the cylinder replacement. This assumption was justified since the hoop stress of a cylinder is twice that of a sphere. The same hoop stress picture was therefore maintained. The results found from this analysis were then compared with the requirements of the ASME Code and found to be acceptable.

An independent analysis was performed on the airlocks by using the finite element computer program. The structure was modeled as two right cylinders with their axes intersecting at a right angle. The results obtained were in close proximity with those previously found, and were acceptable when compared with the ASME Code allowables.

6.B.2.2.9 Brackets

The interior brackets for the LOFT containment vessel were divided into four groups for analysis. Two distinct models were employed for the analysis of the groupings, since the design computer programs used could not cope with the cylinder-plate-vessel discontinuity.

The first model consists of a circular plate and a section of the cylinder extending from the cylinder-plate discontinuity. The second model includes the vessel and a section of the cylinder extending from the cylinder-vessel discontinuity (see Figure 6-B-6).

Pressure, temperature, and external load stresses were considered in the analysis, together with the transient conditions. These stresses were then combined and compared with the allowables specified in the ASME Code. Based on the comparison, the bracket design was considered adequate.

6.B.2.2.10 Nozzle End Plates

The nozzle end plates and blind flanges for the Phase I and Phase II nozzles (see Figure 6-B-7) were analyzed at the nozzle end plate.

Stresses due to the pressure and thermal loads were calculated at the junction primarily through the use of the SEAL-SHELL-2 computer program. These stresses, together with those due to external loadings, were then combined and the results compared with the requirements of the ASME Code. Both the end plates and blind flanges were seen to be conservatively designed.

6.B.2.2.11 Membrane Attachment Ring

The membrane attachment ring is a horizontal plate welded to the interior of the shell; it forms a part of the flexible connection between the vessel shell and the membrane itself. Flexibility is necessary, since the

membrane is firmly embedded in the concrete and remains stationary while the vessel shell undergoes vertical and horizontal displacements and rotations.

The attachment ring was designed in three sections, dependent on the shell circumferential location, by using a discontinuity method of analysis. Displacements of the shell were obtained from FIRL's finite element computer program, Models 1D and 4BBB. Stresses in the attachment were calculated, and the values compared with the ASME Code requirements. The results of the comparison showed a conservative design which was considered adequate (see Figure 6-B-8).

### 6.B.3 Reference

6-B-1. Pittsburgh-Des Moines Steel Company, Submittal 3596, "Final Stress Report for the LOFT Containment Vessel" [PDM Job 15016 prepared for H. S. Wright & Associates under Contract 6018-21-SC-15 (1970)].

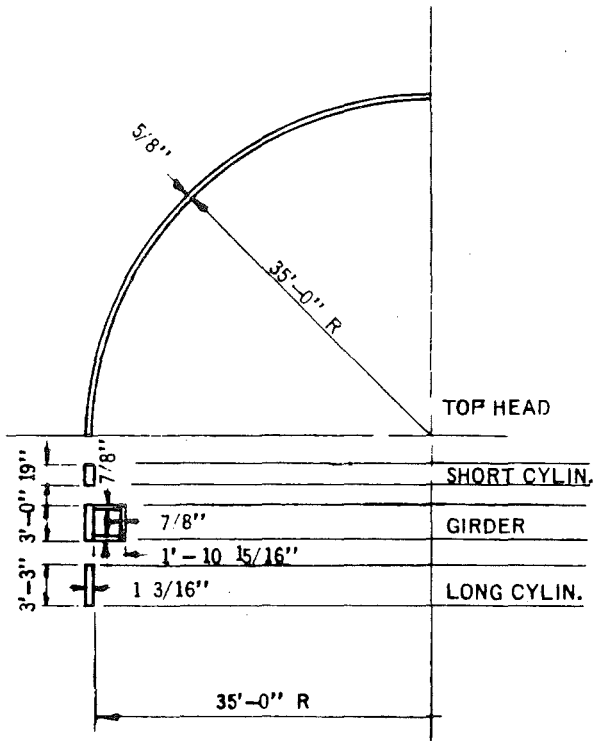


FIG. 6-B-1 TOP HEAD AND CRANE GIRDER.

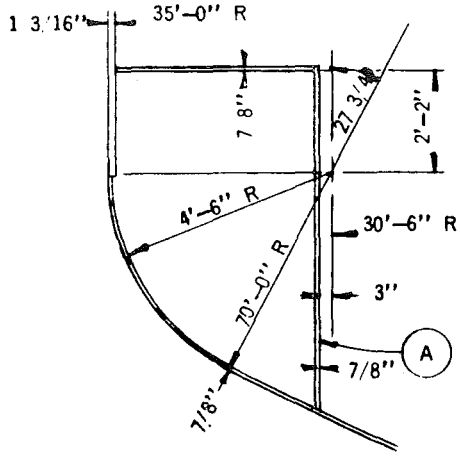


FIG. 6-B-2 BOTTOM HEAD AND REINFORCING RING.

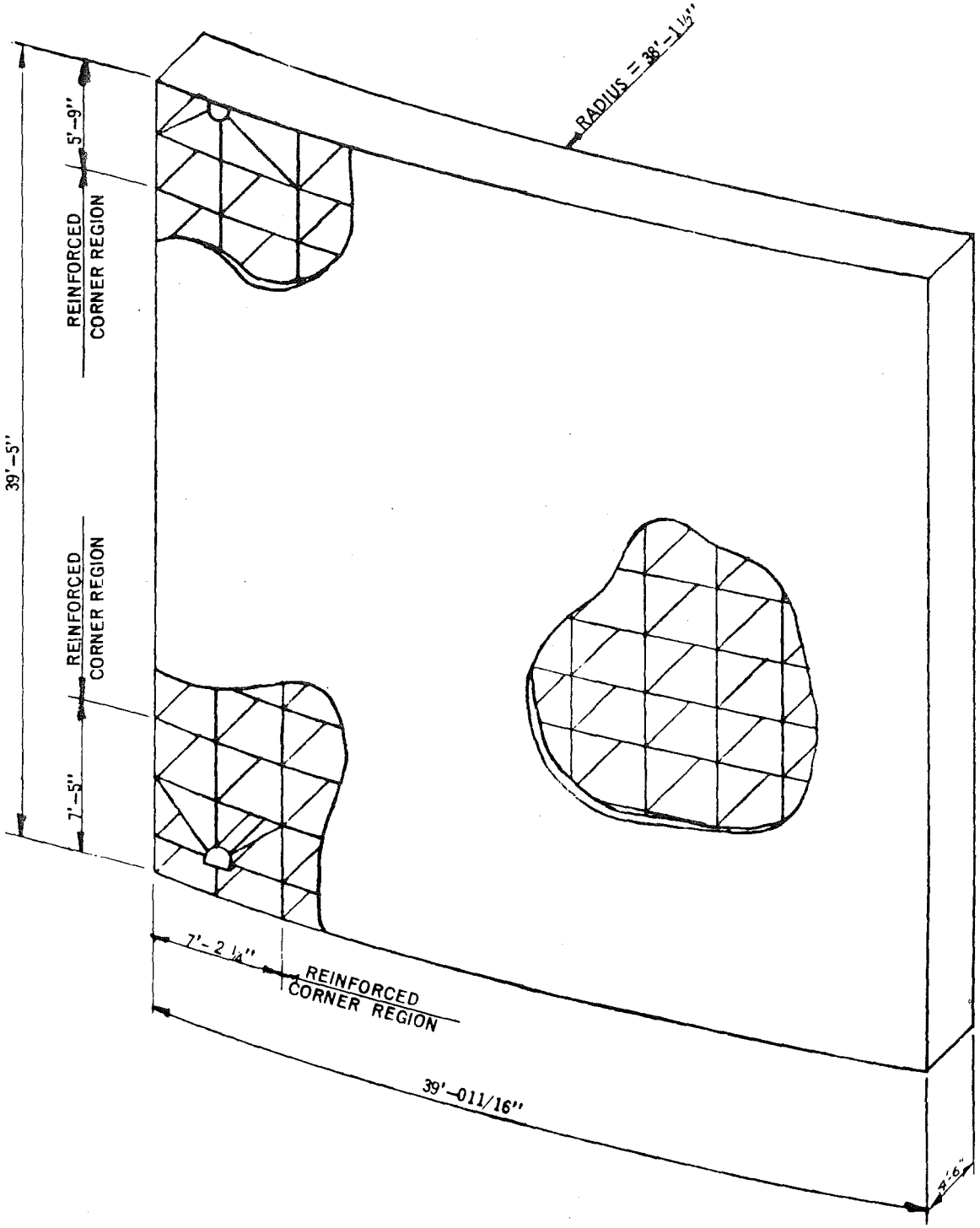


FIG. 6-B-3 RAILROAD DOOR.

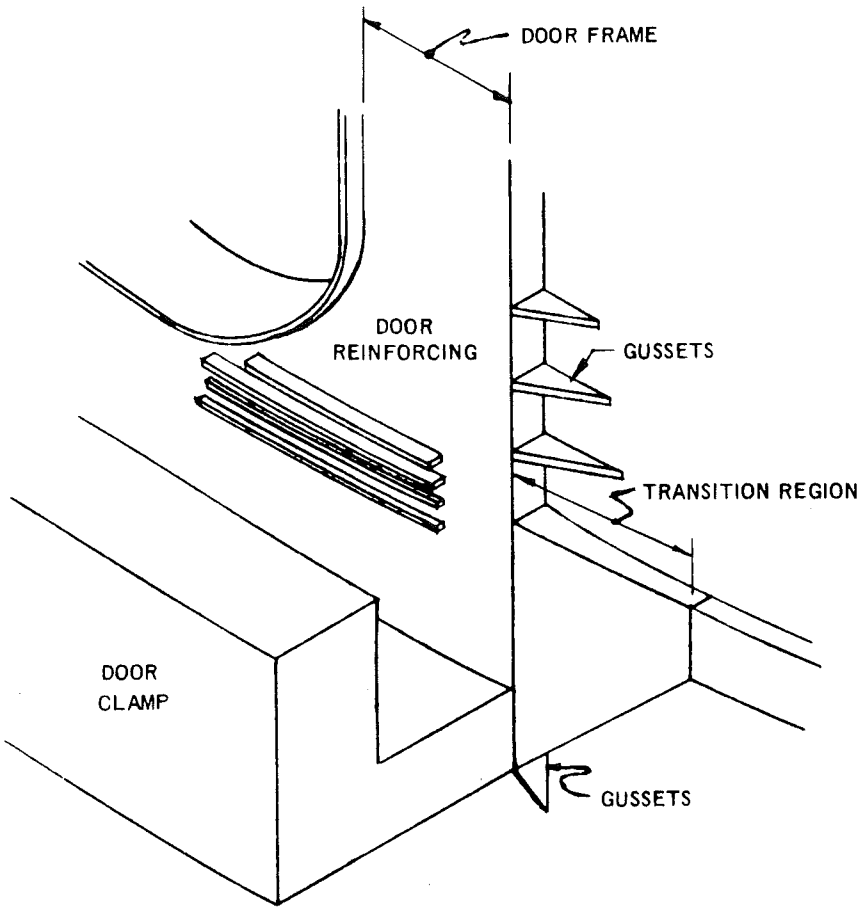


FIG. 6-B-4 RAILROAD DOOR FRAME AND TRANSITION.

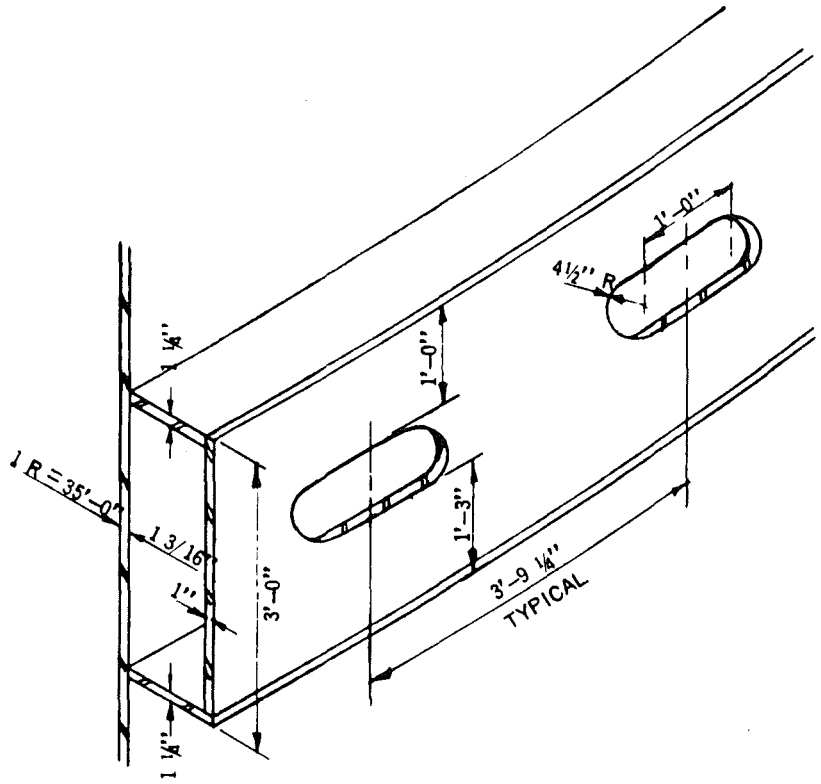


FIG. 6-B-5 TYPICAL UPPER BOX GIRDER SEGMENT.

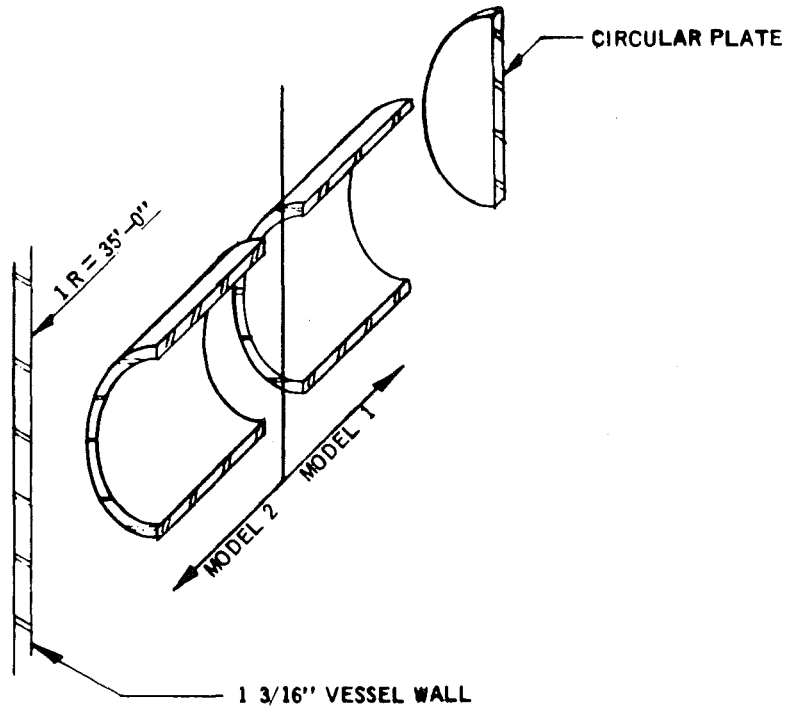


FIG. 6-B-6 TYPICAL BRACKET.

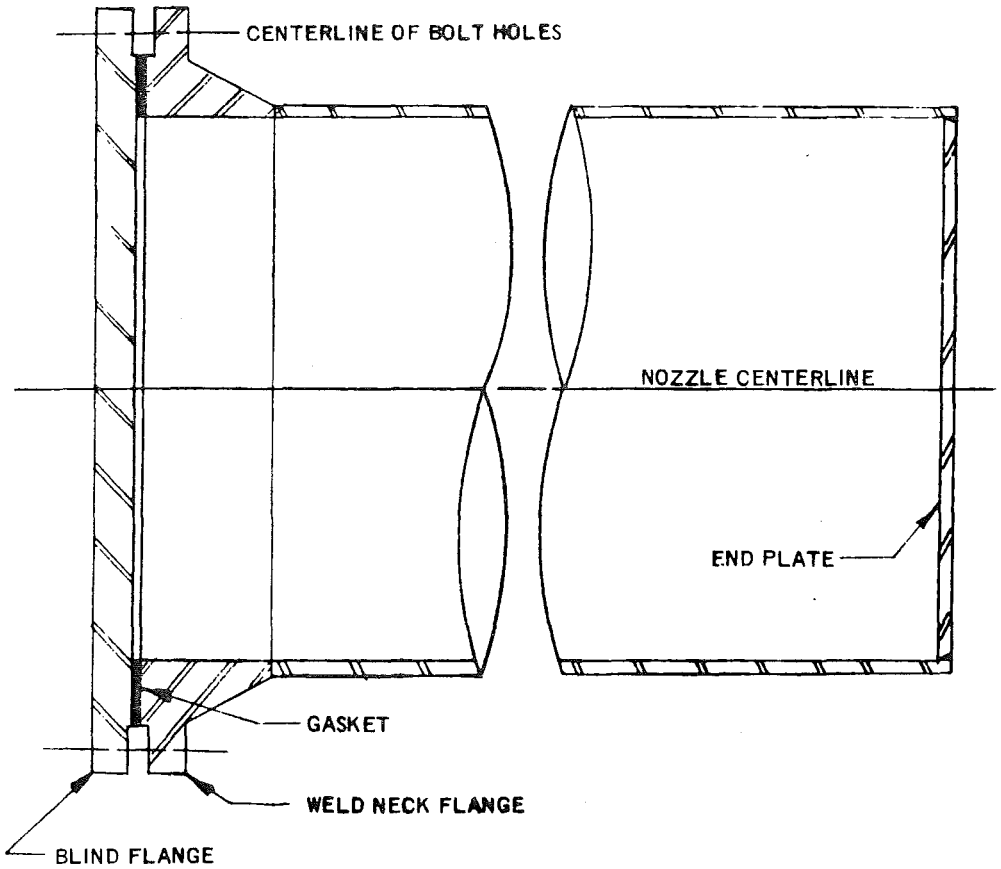


FIG. 6-B-7 NOZZLE END PLATE AND BLIND FLANGE.

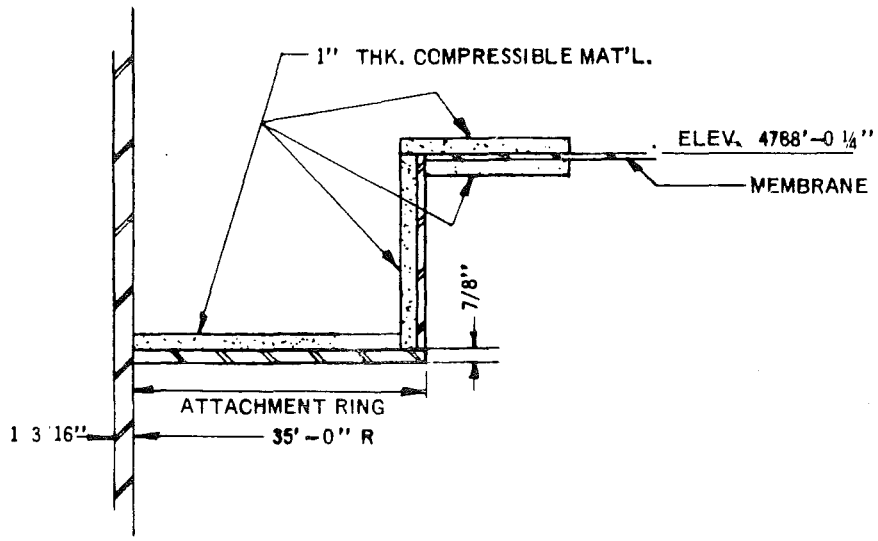


FIG. 6-B-8 MEMBRANE ATTACHMENT RING.

## APPENDIX 6-C

## QUALITY ASSURANCE

### 6.C.1 General

A formal QA organization and reporting system has been employed to assure that critical structures were built in accordance with the specifications. The responsibility, coordination, and monitoring of QC functions of the cognizant organizations are discussed in Section 16.0.

### 6.C.2 Construction Practices and Quality Assurance

#### 6.C.2.1 Government

##### 6.C.2.1.1 Atomic Energy Commission (AEC)

(1) ID Standard Health and Safety Requirements, IDO-12028

(2) Health and Safety Design Criteria Manual, IDO-12044.

#### 6.C.2.2 Nongovernment

##### 6.C.2.2.1 Specifications (ANC LOFT Program)

(1) S-2 Concrete

(2) NT-1 Nondestructive Testing

(3) EC-2 LOFT Environmental Conditions

(4) T-3 Instrumentation General Requirements.

##### 6.C.2.2.2 Standards

(1) American Society of Mechanical Engineers (ASME)

Boiler and Pressure Vessel Code, Section II, Material Specifications, 1965 edition

Boiler and Pressure Vessel Code, Section III, Rules for Construction of Nuclear Vessels, 1965 edition (including Addenda through the Summer 1966 issue)

Boiler and Pressure Vessel Code, Section IX, Welding Qualifications, 1965 edition

Boiler and Pressure Vessel Code, Section VIII, Unfired Pressure Vessels, 1965 edition

Interpretations of the ASME Boiler and Pressure Vessel Code pertaining to Section II through August 1966

(2) International Conference of Building Officials Uniform Building Code, Volume 1, 1964 edition

(3) American Society for Testing Materials (ASTM) Applicable portions of 1966 editions and ASTM A-20 and A-516, 1967 edition

(4) American National Standards Institute (ANSI)

B16.5 - 1961 Edition - Steel Pipe Flanges and Flanged Fittings

B31.3 - 1964 Edition, with Addenda, B31-3A - Code for Pressure Piping

(5) American Institute of Steel Construction (AISC) Specifications for the Design, Fabrication and Erection of Structural Steel for Buildings, 6th edition (1963)

(6) American Concrete Institute (ACI)

318-63 Building Code Requirements for Reinforced Concrete

(7) American Welding Society (AWS)

D1.0 1965 Standard Code for Arc and Gas Welding for Building Construction

(8) Instrument Society of American (ISA)

Standards and Practices for Instrumentation, 1963 edition

(9) American Railway Engineering Association (AREA) Applicable standards

(10) American Railway Association (ARA)

Applicable standards

(11) American Gear Manufacturers Association (AGMA) Applicable standards

(12) American Bearing Manufacturers Association (ABMA)

Applicable standards

(13) Joint Industry Conference (JIC)
Standards for Pneumatic Equipment

(14) National Electrical Manufacturers Association (NEMA)
Applicable standards

(15) Steel Structures Painting Council (SSPC)
SP-3 Power Tool Cleaning

(16) National Fire Protection Association (NFPA)
Bulletin 70, 1964-65 edition

(17) Idaho Nuclear Corporation (INC)
Specification INC-60000 - LOFT Containment Vessel Railroad Door Seals and Pusher Tubes

6.C.3 Quality Assurance Program

The contractor has maintained a QA program in accordance with the requirements as set forth in Section 6.C.1 for fabricating and constructing the containment vessel, which is designated QA Essentiality Level II. This program included, but was not limited to, the following:

(1) Control of materials including chemical and physical test results, mill reports, identification, markings, etc.

(2) Manufacturing and fabrication procedures including such special processes as welders' qualification, welding and repair procedures, NDT acceptance standards, welding inspection, heat treating, etc.

(3) Inspection checklist including processes and procedures and inspection points indicating specific periods for each successive inspection

(4) Control of nonconforming materials.

The contractor is responsible for all required tests performed on material produced by his subcontractors and for performing all additional tests as required by applicable specifications.

The contractor has maintained adequate QA records and furnished to ANC those procedures, reports, and records as required by applicable ASTM standards, ASME and ANSI codes, Federal standards, other standards and specifications, and as specifically called out by ANC specifications. The records generated by this requirement satisfy the intent of Criterion 1 as presented in Appendix 1-A.

## 6.C.4 Materials

### 6.C.4.1 Record of Materials Used

Drawings state the ASTM or other designations of all materials used, and design calculations state the design stresses of all such materials. Where materials are identified by reference to code of ASTM designations or on the drawings, the mill reports were furnished covering the chemical and physical properties of all such materials unless specified otherwise herein. Approval was received prior to any fabrication.

### 6.C.4.2 Pressure- and Temperature-Stressed Materials

Material for shell plates, railroad door stiffeners, circumferential stiffeners, attachment plate for floor diaphragm plate to shell plates, nozzle reinforcement, airlock shells and head plates, crane rail support member, and all other parts which, for code compliance, have:

(1) Conformed to requirements of ASTM Specification A-516, Grade 70 or ASTM Standard A-212, Grade B modified to A-300 mechanical property requirements

(2) Been quenched and tempered to the requirements of paragraph N-333 of Section III of the ASME Code if required to meet Charpy V-notch tests of 20 ft-lb minimum at -50°F in conformance with paragraph N-330 of the same code.

Approval and direction was obtained for impact tests on material having a thickness greater than 3 in. The testing of the load-carrying components of the containment satisfies the intent of Criterion 51 as presented in Appendix 1-A.

The "lowest service metal temperature" used was -20°F in accordance with paragraphs N-1210 and N-1211 of Section III of the ASME Code.

Forged steel flanges (includes blind flanges and airlock door flanges) conformed to ASTM Standard A-350, Grade LF 1 as a minimum.

Seamless pipes conformed to ASTM Standard A-106, Grade B, or A-333.

Welded pipes conformed to ASTM Standard A-155, Class 1, Grade KC 70, and A-300 as modified above.

Bolt material conformed to ASTM Standard A-320, Grade L-7.

6.C.4.3 Non-Pressure- and Temperature-Stressed Materials

Structural shapes, plates, and bars which are not required to be of the same material as the shell plates conformed to ASTM Standard A-36.

Bolt material for structural framing connections conformed to ASTM Standard A-325 unless stated otherwise on approved drawings.

All other miscellaneous materials and bolt material used in the airlocks or elsewhere are of materials compatible with their usage and the specified environmental conditions. They are identified on shop drawings.

6.C.4.4 Weld Filler Materials

Weld filler material conformed to ASTM Standards A-233, A-298, A-316, A-371, A-558, and A-559.

Materials certification on each lot was required for all bare weld rod and wires, covered electrodes, and consumable inserts to certify that the material furnished conforms to the requirements of ASTM Standards A-233, A-298, A-316, A-371, A-558, and A-559.

In addition to the above, a check chemical analysis of covered electrodes, bare welding rod, and wire was performed in accordance with ASTM Standards A-233, A-298, A-316, A-371, A-558, and A-559 following receipt of the material at the vendor's plant and/or at the construction site. This analysis was performed by the welding organization and not by the manufacturer of the welding filler material. The analysis was performed on

each lot[a] of the same heat of covered electrodes and each heat for bare electrodes and insert rings. Both ends of spool-type filler wire were included in the analysis. Copies of the results of the analysis were furnished to ANC.

6.C.4.5 Elastomers

Elastomers subjected to radiation conditions were ethylene-propylene, Parker Seal Company compound or approved equal. Where ethylene-propylene could not be obtained owing to physical size or shape, or where nominal protection from steam could be obtained, the use of nitrile rubber (chloride-free), Parker Seal Company compound or approved equal, was allowed as a second choice.

6.C.5 Fabrication

6.C.5.1 Fabrication of ASME Code Components

Fabrication of the containment vessel as a complete unit, including nozzles, airlocks, railroad door, and all other components and attachments except the railroad door enclosure and bridge enclosure, conformed to the requirements of Section III of the ASME Code. The fabrication of these components in accordance with this code satisfies the intent of Criterion 1 as presented in Appendix 1-A.

---

[a] As used herein:

(1) A "lot of covered, flux cored or fabricated electrodes" is defined as the quantity of electrodes produced from the same combination of heat of metals and batch of flux or core material.

(2) A "batch of flux mix or core material" is defined as that quantity of material made from the same raw materials in identical proportions and manufacturing procedures.

(3) A "lot of bare electrode or cut-length rods" is defined as the material produced from the same melt of metal.

The vendor was responsible for:

(1) Preparing a design and manufacturing schedule

(2) Preparing QC inspection procedures

(3) Inspecting the vessel by an authorized ASME Boiler Code Inspector, stamping with the "N" stamp, and furnishing of "Manufacturers Data Report"[6-C-1] in accordance with the requirements for Class B vessels set forth in Section III of the ASME Code.

Identification marking was made by "interrupted-dot" die stamp in accordance with paragraph N-334 of Section III of the ASME Code. The depth of marking did not exceed 0.010 in.

Edges of material which were prepared for welding and which were pressure and temperature-stressed were magnetic-particle- or liquid-penetrant-inspected in accordance with LOFT Specification NT-1.

Airlock doors and frame assemblies were shop-fabricated as complete, preassembled units in shell plate for field welding into place. These units in shell plate were postweld heat-treated, and all welds were inspected prior to installation in the containment vessel.

The railroad door and railroad door frame were shop-fabricated into subassemblies. Weld inspection and postweld heat treating of the subassemblies were performed prior to shipment of the subassemblies to the erection site. Size of subassemblies depended on the shop facilities for postweld heat treating and on the method of shipping. Assembly of these subassemblies into a complete field subassembly in shell plate, prior to final installation, conformed to the requirements of paragraph N-1340 of Section III of the ASME Code and required inspection of field welds and postweld heat treatment of the field welds.

Nozzles and penetration reinforcements were welded into panels in shell plate for field welding into place at the erection site and were postweld heat-treated and weld-inspected prior to welding into the vessel.

6.C.5.1.1 Tolerances

Welding tolerances conformed to the requirements of paragraphs UW-33, UW-34, and UW-35 of Section III of the ASME Code.

6.C.5.1.2 Welded Joints

Welded joints conformed to the requirements of paragraphs N-1111 and N-1320 of Section III of the ASME Code.

Welding was done by welders qualified and approved in accordance with Section IX of the ASME Code. Category C and D welded joints for 2-in.-tips-and-larger nozzle connections (as defined in paragraph N-460 of Section III of the ASME Code) were full penetration welds. Qualification welding procedures were submitted on each welder prior to his welding on the containment vessel.

6.C.5.1.3 Postweld Heat Treatment

Postweld heat treating conformed to the requirements of paragraph N-1340 of Section III of the ASME Code.

Postweld heat-treating procedures during and following fabrication conformed to the requirements of paragraphs N-531 through N-533 of Section III of the ASME Code. Charts and records giving temperatures, times, heating methods, temperature measuring methods, and thermocouple locations were submitted.

All accessible welds were magnetic-particle-inspected after the final postweld heat treatment.

6.C.5.2 Erection Submittals

Proposed erection schemes, procedures, and drawings were submitted to ANC for approval. Erection analyses, including stress analysis, also were submitted to ANC for information only.

6.C.6 Vendor ASME Code Inspection

Unless otherwise specified, the vendor was responsible for the performance of all inspections and tests required by the ASME Code. The vendor utilized his own facilities or any certified testing laboratory, provided such tests were documented and approved. ANC reserved the right to perform any of the inspections set forth in specifications in accordance with the subcontract where such inspections were deemed necessary to assure conformance with prescribed requirements.

Inspection of all welds conformed to the requirements of Subsection B of Section III of the ASME Code and in accordance with LOFT Specification NT-1, unless specifically stated otherwise herein. In addition to ASME Code radiographic requirements, each root pass, back gauge, and completed weld was 100%-examined and each 1/4 in. (approximate) of weld-deposited material of the intermediate passes by magnetic particle or liquid penetrant methods. The extent of additional special examinations of any intermediate pass such as for new welders, procedural changes, or suspect areas was at the discretion of ANC.

The vendor prepared surfaces for radiography in compliance with paragraph UW-51 of Section VIII of the ASME Code.

Welds found defective by any method were removed and repaired in compliance with Section VIII of the ASME Code. Repair procedures were submitted for approval with the welding procedures.

Repaired welds were subjected to the identical inspection required of the original welds. Welds still defective after two attempts at repair based on the approved repair procedure were not subjected to further repair until new proposals for further repair received prior approval. Such proposals were submitted for each defective weld of each category.

The complete set of radiographs, as specified in Section VIII of the ASME Code, were fully identified for each radiograph indexed, arranged according to the index, suitably boxed or bound, and turned over prior to completion of the contract. During the contract, the radiographs were made available for inspection upon demand.

Inspection of welds on the bottom head and lower portion of the cylinder were made in compliance with Article 14, Subsection B of Section III of the ASME Code. A complete description of the proposed method of making the leak test was submitted for approval prior to commencement of the gas medium test. Operation of the leak detector equipment used in the leak test conformed with the recommendations of the leak detector equipment manufacturer.

Welds not classified as Category A, B, C, or D welds by the ASME Code, and welds not subjected to pressure or primary loads, were inspected in accordance with the "Standard Code for Arc and Gas Welding in Building Construction" of the AWS. NDTs for specific weld categories and for specific locations are set forth in the Codification Chart of NDT Inspection for the LOFT containment vessel.

Inspection for leakage was performed by the "soap bubble" test at 1 to 5 psig. Where required by code, halide test methods were used. Any leaks were repaired prior to the "leak rate" test.

### 6.C.7 Acceptance Tests

Acceptance tests are described in Section 14.2.

### 6.C.8 Proof and Leak Tests

Proof and leak testing are described in Appendix 6-D.

### 6.C.9 Reference

6-C-1. Pittsburgh-Des Moines Steel Company, "Final Mechanical Design Report for the LOFT Containment Vessel", Appendix V.

## APPENDIX 6-D

## LOFT LEAK RATE CRITERIA AND LEAK TESTING PROGRAM FOR LOFT CONTAINMENT VESSEL

This appendix outlines the leak rate testing philosophy and program for the LOFT containment vessel. The appendix is divided into four parts describing:

(1) The background information related to the leak testing program

(2) The philosophy used to establish maximum leakage rate limits

(3) The LOFT leak rate program including the tests conducted by the construction contractors and ANC

(4) The instrumentation to be used during each of the leak tests.

The requalification program described herein satisfies the intent of Criteria 16, 52, 53, and 54 as presented in Appendix 1-A.

### 6.D.1 Background

During the conceptual design of the LOFT containment vessel, the design goal for the leaktightness was that of being "typical" of containment vessels required for commercial reactor facilities. A study of the commercial plants (1962-1963) revealed that a leakage rate of approximately 0.2 wt% per day of the dry air in the containment vessel free volume at the maximum design pressure (36 psig) would be representative of the industry. The leakage rates specified for current commercial containment vessels has not changed significantly from early LOFT design and is in the range of 0.1 to 0.2 wt% per day[6-D-1].

The radiological consequences associated with conducting a LOFT unperturbed test (core melt-no core cooling) were reviewed using the containment leak rate of 0.2 wt% per day. This review used the offsite exposure guidelines recommended by the ACRS Committee[6-D-2] of 10 CFR Part 20 (or AECM Chapter 0524) for the normal performance of a planned test and 10 CFR Part 100 for the protection of the public from the consequences of an unlikely major accident. Based upon these guidelines and a leakage rate of 0.2 wt% per day, the review indicated that the LOFT test could be conducted and would be within the guidelines for offsite exposure[6-D-3].

A comparison of the exposure guidelines used for the LOFT radiological calculations with those used by the nuclear reactor industry shows

that the exposure guidelines for the LOFT unplanned major accident are the same as industry uses for siting reactors. However, for a planned LOFT experiment, which simulates a commercial reactor accident, the offsite exposure guidelines are the same as used by the reactor industry for the discharge of radioactive material during reactor operation (off-gassing, radioactive effluents, etc.).

Owing to the increased emphasis on ESFs, the LOFT program has been redirected to provide assurance, through experimental verification, that the LOFT ESF will function as designed following a blowdown. As a result, the test program has changed from a single test to a multitest experiment as discussed in Section 2.0. The offsite radiological consequences associated with the new program have been investigated and are included in Section 15.0. The calculations indicate that the radiological consequences associated with the new program and a leakage rate of 0.2 wt% per day will be within the exposure guidelines.

In addition to the changes to the LOFT program, recent work in the leak testing field has resulted in changes to the AEC guidelines used for conducting leak rate tests. Since the original LOFT PSAR was written, the leak testing guidelines have been changed. The current guidelines are established in 10 CFR Part 50, Appendix J[6-D-4]. The necessary changes to the LOFT leak rate testing program to be consistent with this guide are described in Section 6.D.3.

### 6.D.2 Leakage Rate

Leakage rate tests must be conducted to satisfy the facility acceptance tests and to periodically verify that the containment vessel will prevent an excessive fission product release during the LOFT testing program. To satisfy both requirements, the leakage rate was established at 0.2 wt% per day of dry air in the containment vessel.

The reference pressure used during these facility leakage rate acceptance tests and the verification tests, which are to be conducted periodically to verify that the containment leak rate is within the prescribed limits, corresponds to the LOFT containment design internal pressure of 36 psig as determined by the ASME Boiler and Pressure Vessel Code. This pressure exceeds the anticipated peak pressure resulting from

a rupture of the primary coolant system and results in a more stringent leakage criterion than is usually used by the reactor industry. The predicted peak pressure for the LOFT primary system volume is less than one-half of design internal pressure.

As discussed in Section 6.D.3, the facility construction phase consists of two acceptance tests. One test has been conducted on the bare vessel with the railroad door, airlocks, and vacuum relief valves installed; the other test will be conducted on the completed vessel.

### 6.D.3 LOFT Leak Test Program

The LOFT leak rate testing program consists of two types of containment vessel leak rate tests, viz, (a) the facility acceptance tests and (b) the subsequent leak rate verification tests. Acceptance testing is performed to meet the construction specification and to obtain an operating permit. The periodic leak rate verification testing is required throughout the operating life of the facility to verify that the containment vessel maintains the leaktightness characteristics as specified in the leakage criterion. The different types of leak rate tests are described in the following paragraphs.

#### 6.D.3.1 Acceptance Tests

The facility acceptance tests consist of two series of tests. The first series has been conducted on the completed but unpainted steel containment vessel. The airlocks, vacuum relief valves, the penetration nozzles, and the railroad door are installed on the vessel at this time; however, penetration nozzles are blanked off, except those needed to conduct the test. The second series of tests is to be conducted on the containment vessel at the completion of facility construction to verify that the completed facility is within the leak rate specification.

##### 6.D.3.1.1 Bare Vessel Tests

The first series of tests has been conducted to show that the containment vessel meets the construction specification[6-D-5] and the ASME Boiler and Pressure Vessel Code stamping requirements.

The tests included in the test series are shown in Table 6-D-I.

TABLE 6-D-I

BARE VESSEL ACCEPTANCE TESTS

| Item | Test | Pressure (psig) | Test Function |
|---|---|---|---|
| 1. | Structural integrity: | | |
| | a. Soap bubble test | Approximately 5 | Check accessible non-welded joints for gross leaks. |
| | b. Pneumatic proof | 45 (125% design internal pressure) | Check structural integrity of containment vessel (code stamping). |
| | c. Soap bubble test | 36 (design internal pressure) | Check accessible welded joints for gross leaks. |
| 2. | Leakage rate test: | | |
| | a. Soap bubble test | Approximately 5 | Check accessible non-welded joints for gross leaks. |
| | b. Pneumatic leak | 36 (design internal pressure) | Check the capability of the containment vessel to meet the construction leak-tightness criteria established in 10 CFR 50, Appendix J. This corresponds to 75% of the design leakage rate (0.2 wt% per day). |

6.D.3.1.2 Completed Facility

The second series of tests is required to show that the completed containment vessel meets the construction specification leaktightness criteria. The tests included in this series are shown in Table 6-D-II.

TABLE 6-D-II

COMPLETED VESSEL ACCEPTANCE TESTS

| Item | Test | Pressure (psig) | Test Function |
|---|---|---|---|
| 1. | Soap bubble | Approximately 5 | Check accessible joints and welds on areas modified since bare vessel acceptance test for detectable leaks. |
| 2. | Leak tests: | | |
| | a. Entire containment vessel | 36[a] | Check the capability of containment vessel to meet leaktightness criteria of 10 CFR 50, Appendix J. |
| | b. Test chamber (basement isolation) | 36 | Check the leak rate into the containment vessel basement to ensure that the basement will not become excessively contaminated during an integral test. |

[a] The design internal pressure.

### 6.D.3.2 Leak Rate Verification Tests

The leakage rate tests will be conducted periodically on the entire containment vessel. Prior to any nuclear operation, any access seals disturbed since the last complete containment vessel leak rate test will be retested in accordance with the guidelines of 10 CFR Part 50, Appendix J. The test required to verify that the containment vessel is within leakage tolerance is described in Table 6-D-III.

TABLE 6-D-III

CONTAINMENT VERIFICATION TEST

| Leak Rate Test | Pressure (psig) | Test Function |
|---|---|---|
| Entire containment vessel | 36 | Check the leaktightness of the containment vessel to verify that the containment is within the leakage criteria. |

The schedule for conducting the containment verification test, as required by 10 CFR Part 50, Appendix J, is to conduct three tests at approximately equal intervals every 10 years -- or immediately following any major modification or replacement of the containment vessel components which cannot be leak-tested independently. These requalification tests will be scheduled to coincide with reactor shutdown.

The containment vessel leak tests will be supplemented by pressure decay tests on the major containment components such as the railroad door seals, the airlocks, the vacuum relief valves, and the containment HV isolation valves.

The testing schedule for those components is given in Table 6-D-IV.

TABLE 6-D-IV

CONTAINMENT COMPONENT LEAK TESTS

| Item | Component | Test Pressure (psig) | Type of Test and Frequency |
|---|---|---|---|
| 1. | Railroad door seal | 36 | Pressurization of the space between the door seals. These tests shall be conducted at intervals less than 2 years or immediately following unsealing of the railroad door. |
| 2. | HV isolation valves | 36 | Pressurization of the space between the valves. These tests shall be conducted during reactor shutdown between LOCEs. |
| 3. | Vacuum relief valves | 36 | Same as for isolation valves. |
| 4. | Airlocks | 36 | Pressurization of the space between airlock doors. These tests shall be conducted at 4-month intervals except when the airlocks are not opened in the interval. The maximum interval between tests, if they are not opened, shall not exceed 1 year. |

### 6.D.4 Leakage Rate Testing Equipment

The leak rate test instrumentation used in the containment vessel leakage rate test consists primarily of the measurement instrumentation used during the Carolinas-Virginia Tube Reactor Leak Testing Program[6-D-6]. This instrumentation is supplemented by additional dewpoint hygrometers and a data acquisition system. The instruments and the associated accuracies for this instrumentation are shown in Table 6-D-V.

The containment leakage rate instruments specified in Table 6-D-V are used to measure the containment vessel leakage rate by the absolute method and verify the leak rate by the superimposed leak technique. The pressure, temperature, humidity, and data acquisition instruments are to be used to measure the containment atmosphere parameters to calculate the leakage rate by the absolute method, employing the perfect gas laws. The superimposed leak will verify the absolute method of calculating the leak rate by measuring the amount of gas being released through a known leak. These leak rate calculational techniques are discussed in ANSI Standard N45.4-1972[6-D-7].

In some instances the pressure and temperature measurement instrumentation will be used in leak-testing the containment components by the pressure decay technique.

### 6.D.5 References


6-D-1. Letter, H. L. Coplen, INC, to R. E. Swanson, AEC-ID, "Principal Industrial PWR Plant Design Characteristics", HLC-134-69 (October 16, 1969).

6-D-2. Letter, H. Kouts, ACRS, to G. T. Seaborg, USAEC, "Report on the LOFT Facility" (August 28, 1964).

6-D-3. Phillips Petroleum Company, Preliminary Safety Analysis Report Addendum--LOFT Facility, IDO-16981 (April 1964).

6-D-4. U. S. Atomic Energy Commission, Code of Federal Regulations, Title 10 - Atomic Energy, Part 50, Appendix J, "Reactor Containment Leakage Testing for Water-Cooled Power Reactors" (February 14, 1973).

TABLE 6-D-V

CONTAINMENT LEAK RATE INSTRUMENTS

| Item | Parameter | Instrument | Accuracy | | Range |
|---|---|---|---|---|---|
| | | | Calibrated | Repeatability | |
| 1. | Pressure | Two Texas Instruments precision pressure gauges | ± 0.0072 | ± 0.003 psia | 0 to 61 psia |
| 2. | Temperature | 15 platinum resistance thermometers | ± 0.38°F | ± 0.1°F | -20 to 150°F |
| 3. | Humidity | a. One Cambridge dewpoint hygrometer | ± 0.5°F | ± 0.5°F | -20°F to ambient dewpoint |
| | | b. Two dew cells plus two resistance thermometers | ± 3°F | ± 3°F | 12 to 100% RH |
| 4. | Data acquisition | Hewlett-Packard Model 7571 data acquisition system | The greater of ± 0.005% of reading or 0.0005% full scale | One part in $1.2 \times 10^6$ | $10^{-6}$ to $10^3$ V |
| 5. | Flow rate | Hastings-Raydist mass flowmeter | ± 0.1 scfm | ± 0.025 scfm | 0-5 scfm |

6-D-5. Aerojet Nuclear Company, LOFT Program Division, Specification S-1, "Containment Vessel"[a].

6-D-6. G. E. Bingham, Final Results of the Carolinas-Virginia Tube Reactor Containment Leak Rate Test, IN-1399 (June 1967).

6-D-7. American National Standards Institute, Standard ANSI N45.4-1972, "Leakage Rate Testing of Containment Structures for Nuclear Reactors" (March 16, 1972).

[a] Current issue.

## APPENDIX 6-E

## LOCE CONTAINMENT RESPONSE

Pressurization of the containment vessel test chamber will not occur in any of the currently planned tests, since the blowdown suppression system will condense the primary coolant blowdown and contain all coolant and gases directed to the suppression tank. However, two of the low-priority program objectives of LOFT are to measure experimentally (a) the containment response to a LOCA and (b) the fission product release and migration resulting from a LOCA. If the measurements of fission product release to the pressure suppression vessel are found not sufficiently informative, some tests discharging to the containment vessel may be planned. Four LOCE test cases have been analyzed to encompass the worst possible consequences of a LOCE discharging to the containment vessel from the point of offsite radiological exposure.

### 6.E.1 Analysis Cases

The four cases analyzed each include the occurrence of a single unlikely fault as identified below and in Table 6-E-I. A brief description of each case and its objective follows.

(1) The fault condition is assumed to be a change in meteorological conditions from Pasquill C to Pasquill F and a change in outside temperature conditions starting to occur at 4 hr after the blowdown initiation. Case 1 represents the containment response for a summer test in which such a weather change occurs and the pressure reduction sprays are employed for 40 min starting at 3 hr after blowdown.

(2) Case 2 represents the containment response for a winter test in which the change in meteorological conditions mentioned in (1) occurs but the outside temperature remains constant. The pressure reduction sprays are assumed to be used for 40 min starting 1 hr after blowdown.

(3) Case 3 represents the containment response for a summer test in which the pressure reduction spray is initiated 15 min after blowdown and is left on for 40 min. The outside temperature is assumed to remain constant.

TABLE 6-E-I

CONTAINMENT RESPONSE ANALYSIS

| Item | Parameter | Case 1 | Case 2 | Case 3 | Case 4 |
|---|---|---|---|---|---|
| 1. | Outside air temperature | 90° decreasing to 50° linearly in 6 hr, beginning at t = 4 hr | 45° | 90° | 90° |
| 2. | Pressure reduction spray system operating period | t = 3 hr to 3 hr 40 min | t = 1 hr to 3 hr 40 min | t = 15 min to 55 min | None |
| 3. | Spray system flow rate | 500 gpm | 500 gpm | 500 gpm | None |
| 4. | Spray water temperature | 70° | 70° | 70° | None |

(4) Case 4 represents the containment response in which the pressure reduction spray system is assumed inoperable throughout the test. As shown in the results (Section 6.E.3 and Figures 6-E-7 and 6-E-8), the pressure reduction spray system is not required as a PPS since containment pressure remains much below design values, even when the spray system is not used. Sprays may be used if such use would significantly reduce the potential radiological hazards.

6.E.2 Assumptions and Methods

The CONTEMPT code, described in Sections 15.3.6.3.3 and 15.3.6.4.3, was used to perform the containment response analysis. The assumptions, which were varied for each case, are presented in Table 6-E-I. In all cases, the following assumptions were made:

(1) Containment vessel to external air heat transfer coefficient = 3 Btu/hr-ft$^2$-°F

(2) Primary system blowdown = double-ended outlet break

(3) Decay heat generation = infinite operation

(4) Pressure reduction spray solution = 20,000 gal of borated water at 70°F (separated from test chamber)

(5) Ambient containment pressure = 12.5 psia

(6) Ambient containment temperature and humidity = 100°F, 20%

(7) Containment free volume = 325,000 ft$^3$.

Other assumptions made in the CONTEMPT code are discussed in 15.3.6.3.3 and 15.3.6.4.3.

6.E.3 Results

The containment pressure and associated temperatures for the analysis discussed in Section 6.E.1 are shown in Figures 6-E-1 through 6-E-8 on linear and expanded time scales. As can be seen in the figures, the containment pressurization is generally less than 8 psig for all cases, including Case 4 in which the pressure reduction sprays are not initiated. This calculated maximum containment pressure is well below the containment design internal pressure of 36 psig. Thus, containment heat removal systems required by AEC Criterion 38 (see Appendix 1-A) are not required for LOFT plant safety, and the adequacy of the containment design required by AEC Criterion 50 is clearly demonstrated.

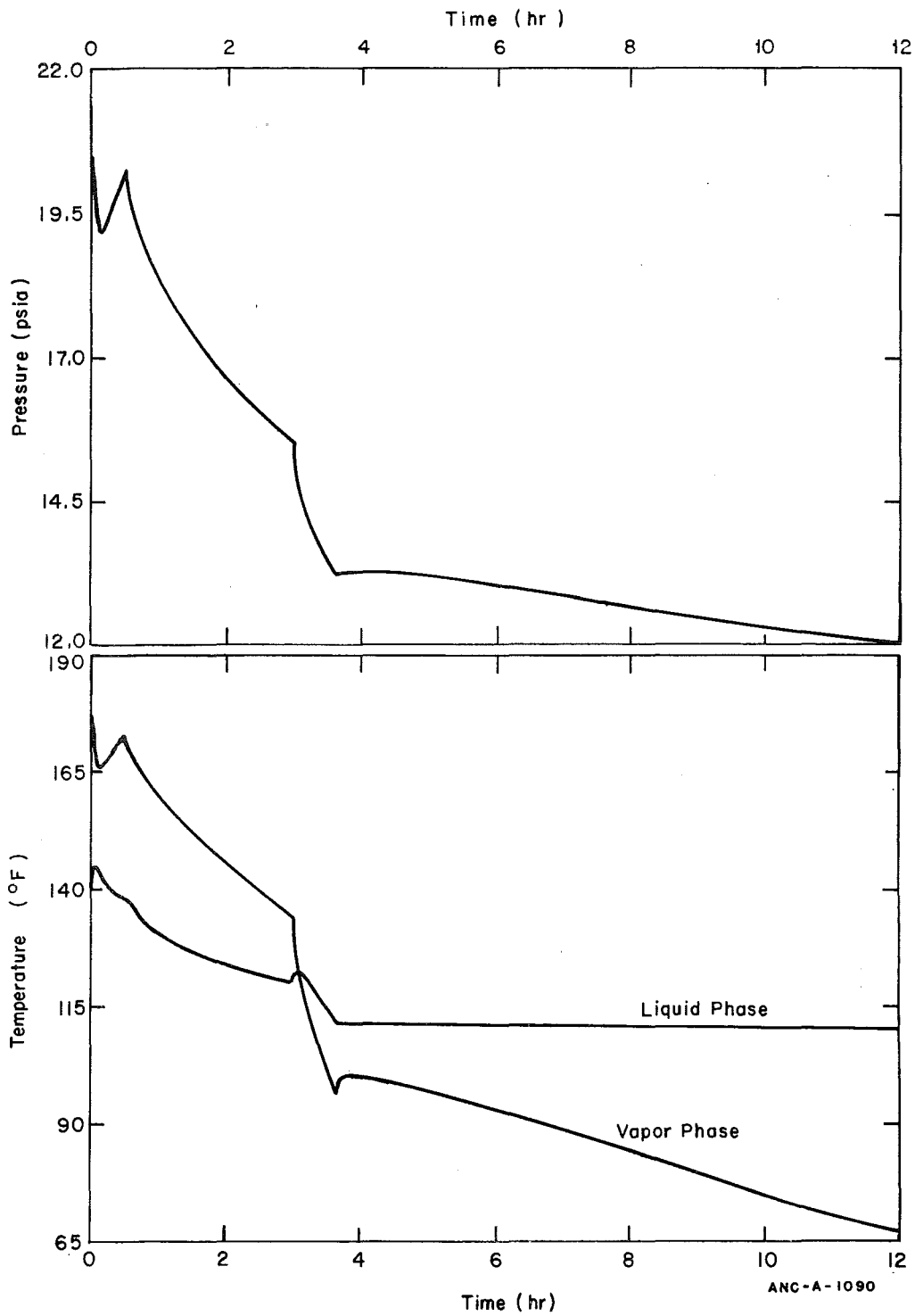


FIG. 6-E-1 LOCE CONTEMPT ANALYSIS CASE 1.

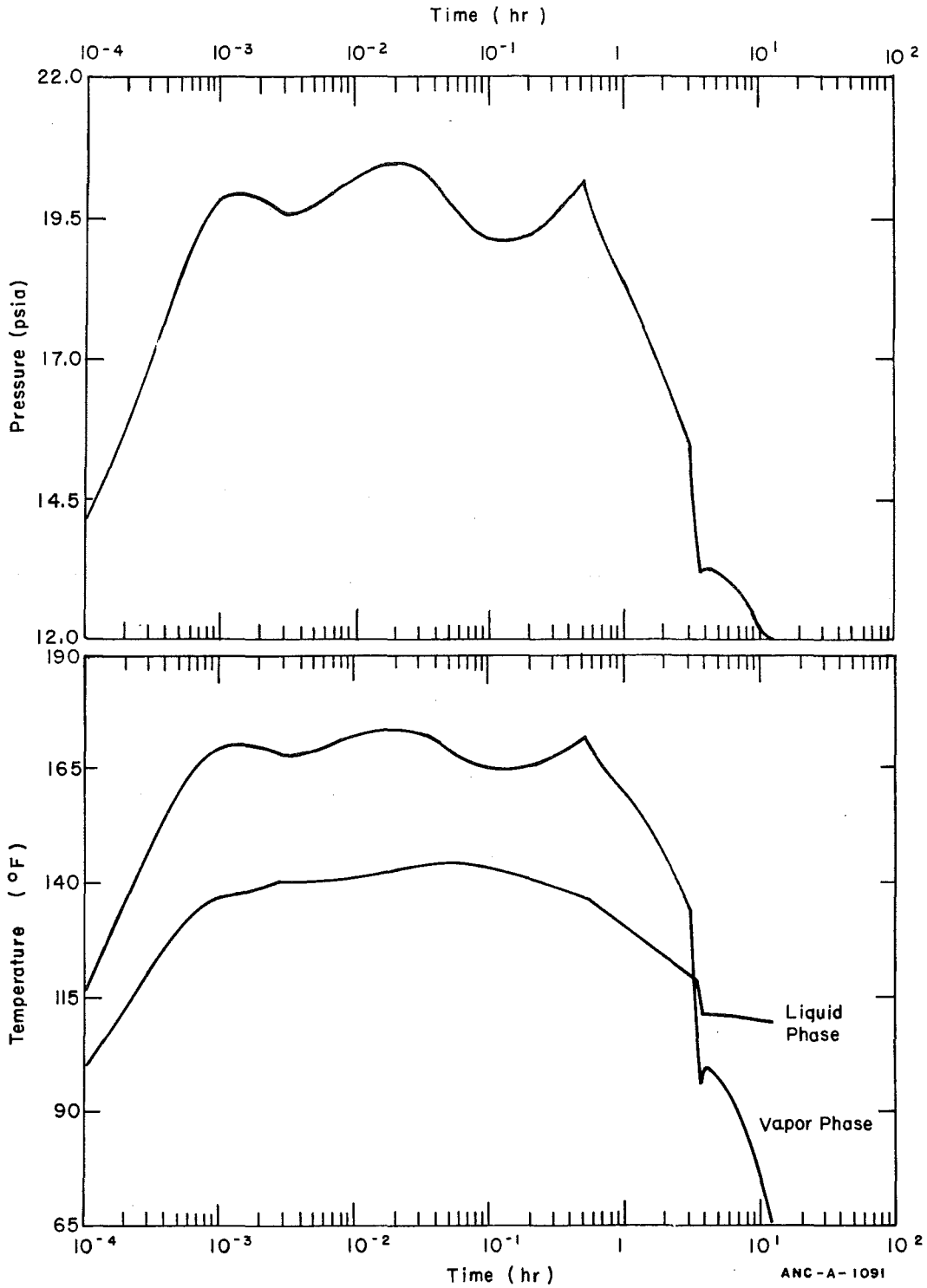


FIG. 6-E-2 LOCE CONTEMPT ANALYSIS CASE 1 -- EXPANDED TIME SCALE.

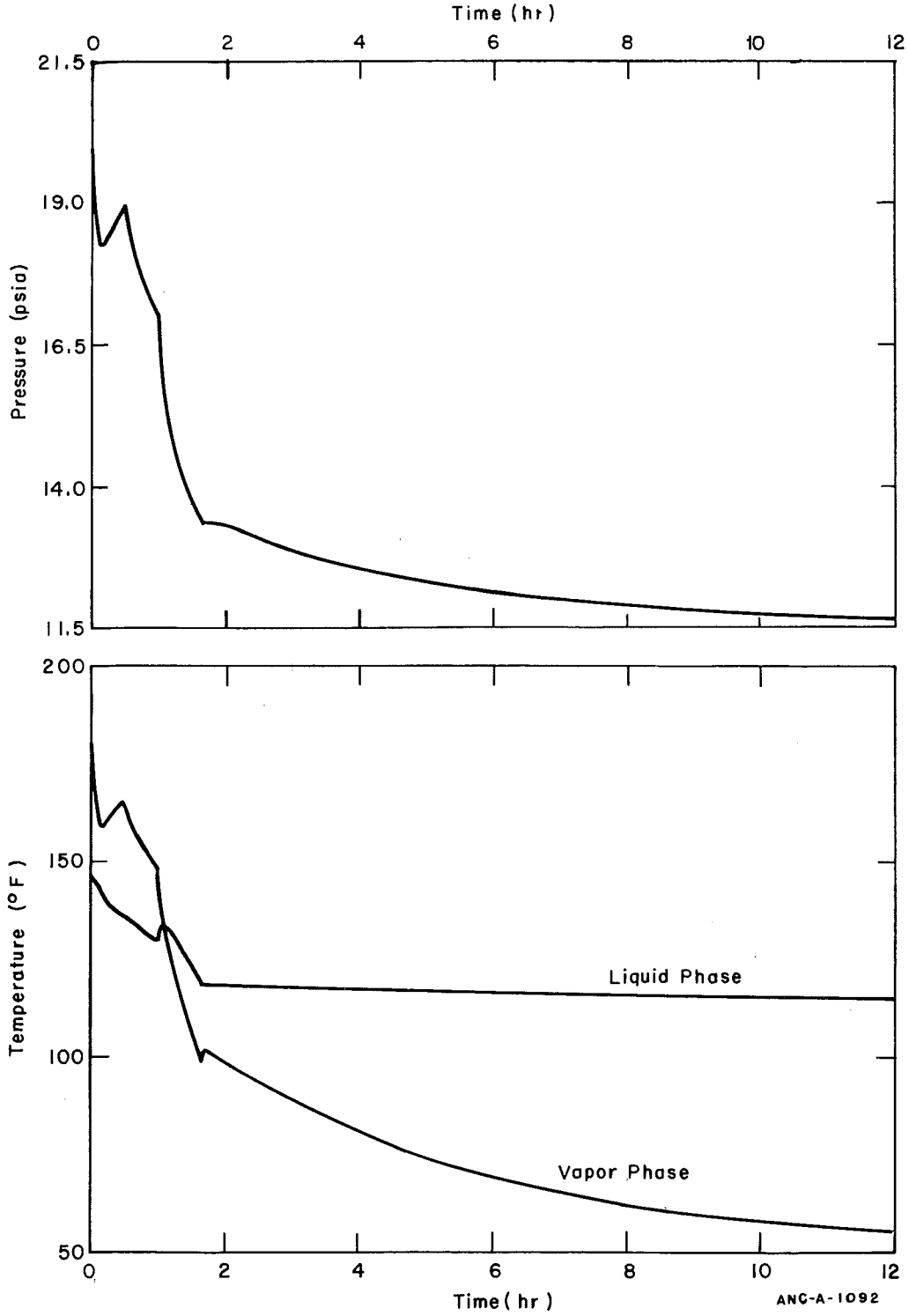


FIG. 6-E-3 LOCE CONTEMPT ANALYSIS CASE 2.

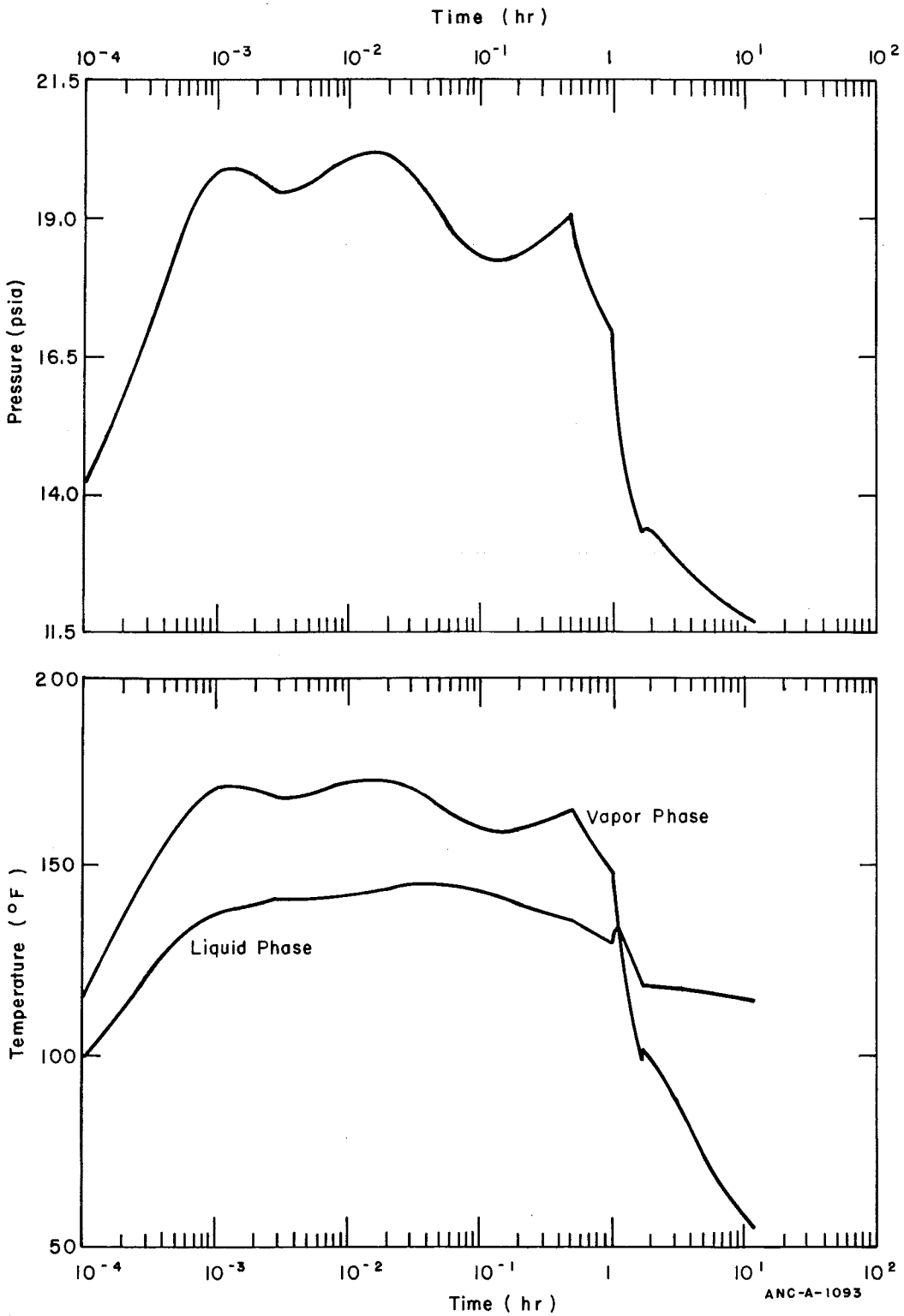


FIG. 6-E-4 LOCE CONTEMPT ANALYSIS CASE 2 -- EXPANDED TIME SCALE.

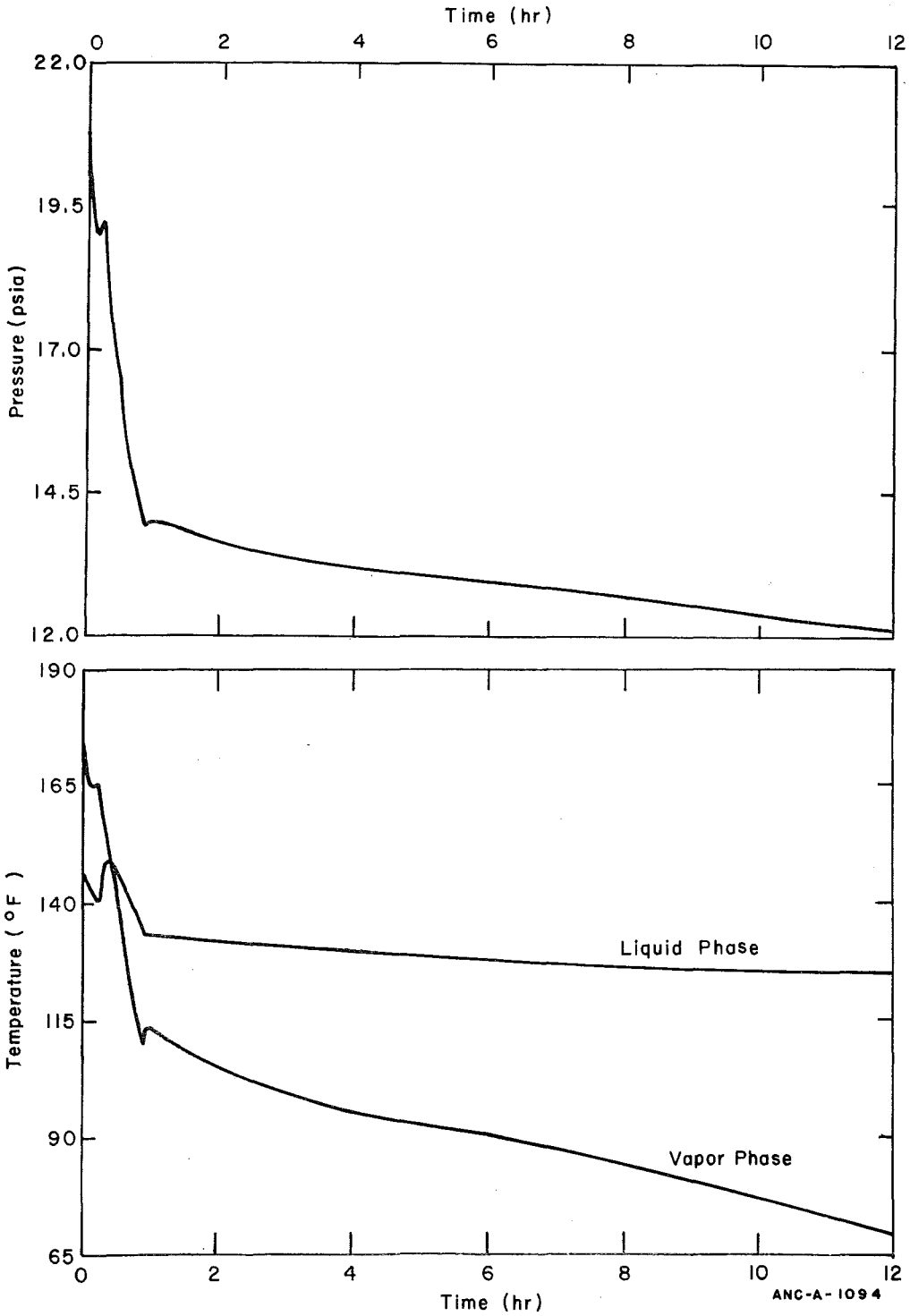


FIG. 6-E-5 LOCE CONTEMPT ANALYSIS CASE 3.

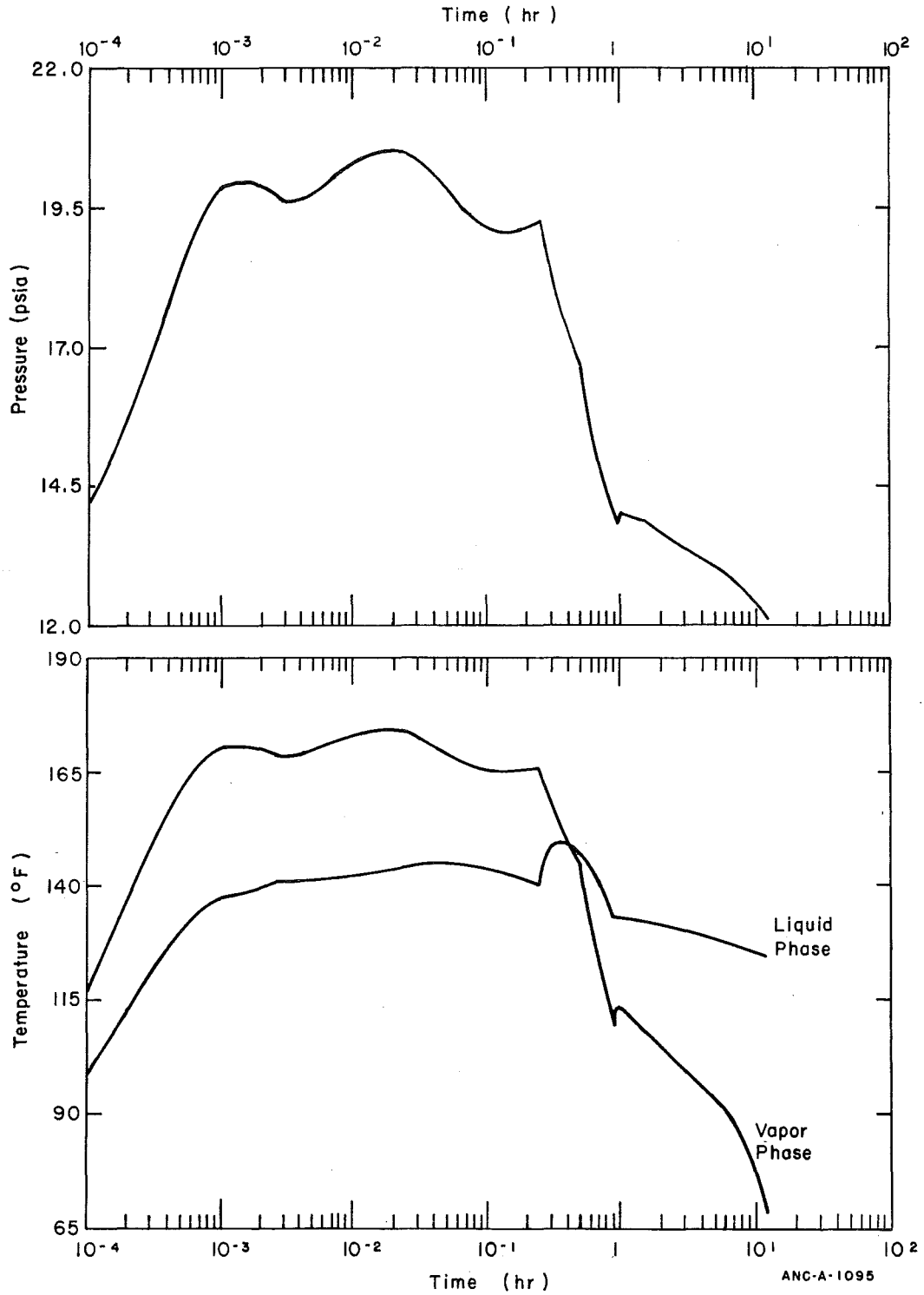


FIG. 6-E-6 LOCE CONTEMPT ANALYSIS CASE 3 -- EXPANDED TIME SCALE.

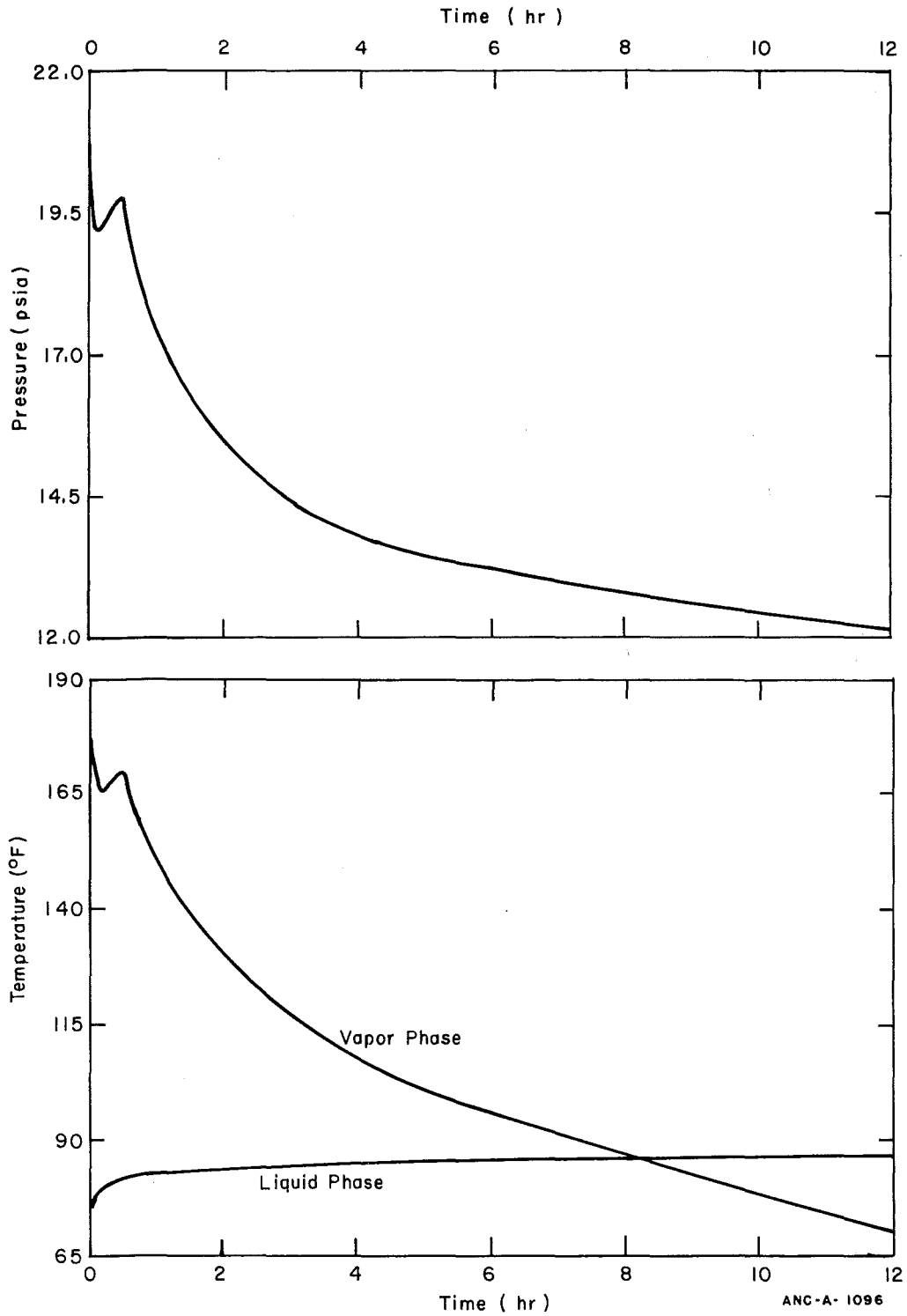


FIG. 6-E-7 LOCE CONTEMPT ANALYSIS CASE 4.

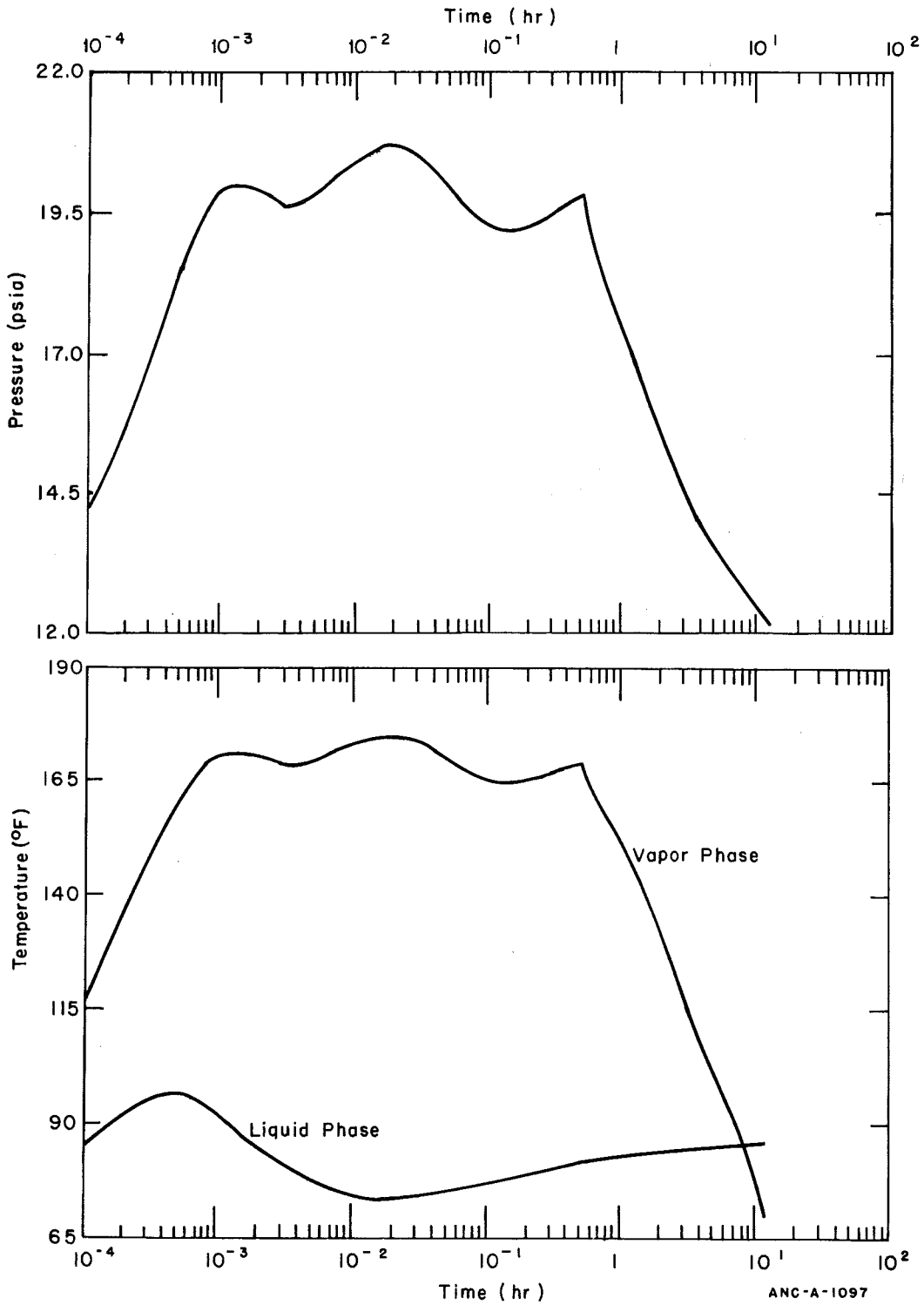


FIG. 6-E-8 LOCE CONTEMPT ANALYSIS CASE 4 -- EXPANDED TIME SCALE.