The contents of this
document are the highest
quality obtainable.

Initial KB Date 12/9/93

006209

REPORT ON
PERFORATION AND CEMENTING FOR
ABANDONMENT OF THE
ICPP INJECTION WELL MAH-FE-PL-304

PREPARED FOR

MK-FERGUSON OF IDAHO COMPANY

OCTOBER, 1989

BY

FENIX AND SCISSON AND

MK-ENVIRONMENTAL SERVICES

006209

INTRODUCTION

Final Abandonment of Injection Well MAH-FE-PL-304, located at the Idaho Chemical Processing Plant of the Idaho National Engineering Laboratory, Idaho, was performed under contract number S-289039. The work was done under the direction and supervision of Fenix and Scisson (F&S), Tulsa, Oklahoma, a subsidiary of PK-KBB, Inc., of Houston, Texas, the prime subcontractor to MK-Ferguson of Idaho Company (MK-FIC), the construction manager for the Department of Energy (DOE). Abandonment was coordinated with and approved by Westinghouse Idaho Nuclear Company, Inc. (WINCO), the plant operator, and the DOE Idaho Operations Office. EG&G Idaho, Inc. (EG&G) was responsible in the development of the Abandonment Plan and for oversight of seismic monitoring of blast effects relative to perforating. The USGS and MK-Environmental Services provided technical assistance and field support throughout the abandonment.

Construction was performed in accordance with the "Abandonment Plan for Injection Well MAH-FE-PL-304", EG&G, April 1989 and approved by the Idaho Department of Water Resources (IDWR). Any significant changes to the plan, encompassing scope, methodology, deviation, or unusual conditions were authorized by WINCO and approved by IDWR.

PURPOSE

The work consisted primarily of perforating and cementing of the well from the bottom upward to the surface. Perforation was performed by explosive perforating guns commonly used in the oil field industry. Cement was displaced through the perforations out and into successive well casings and the well-bore annulus by pressure grouting methods to provide an effective vertical seal within the well between porous formations.

COMPLETION SCHEDULE

Installation of the fabricated riser system to the well head for placement of the cement seal was completed during the week of September 24, 1989. Perforating and cementing began on October 5, 1989 and sealing was completed on October 16, 1989.

PROCEDURES

F&S abandoned the well in accordance with specifications outlined in the subcontract number S-289039.

Perforating of the well casings was accomplished using 34-gram conical shaped charges. The number of charges alternated between two shots per foot and four shots per foot. Each perforating gun is capable of perforating a ten-foot interval. Between two and eight guns were used daily to perforate the desired interval in the well bore to most efficiently accommodate the amount of cement that could be displaced through perforations and into the formation.

006209

The amount of cement was designed depending on relative permeability and porosity identified by circulation test results of the interval being cemented. An estimate of cement requirements was determined by pumping fresh water into the formation under variable flow rates and measuring pressure response. When the flow rate was established, the amount of cement to be used was determined by adjusting the pump-in pressure on the density differential between fresh water and the cement slurry.

Operations were performed under the direct observation of MK-FIC, WINCO, IDWR, EG&G, and the DOE. As the perforating and cementing operations proceeded uphole, variation in well conditions required changes in the procedures. These changes were made with the agreement of all parties to the procedures (refer to Appendix A for on-site changes).

ACTIVITIES AND RESULTS

Activities and results will be presented in the following sub-headings:

Perforation Test

Mobilization and Orientation

Perforating and Cementing Operations

Demobilization

Perforation Test

A perforation test to determine the perforating ability of the conical charges to be used was performed at the facilities of Titan Specialties, Inc. in Pampa, Texas the week of September 4, 1989. The purpose of the test was to demonstrate the ability of the conical charges to penetrate five (5) layers of casing with different types of material between each layer of casing. The casing sizes used were 10-3/4 inch Drisco High Density Polyethylene (HDPE) casing inside 12-inch steel casing inside 16-inch steel casing inside 18-inch steel casing inside 20-inch steel casing. The casings were stacked in a concentric column 12 feet long. This layered casing was set in a 24-inch diameter borehole replicating well construction of the injection well being proposed for abandonment.

The bottom one-third of the test casings was filled with 15.8 lb/gal of class "H" cement between the steel casings.

American Petroleum Institute (API) Cement Classes G and H are basic well cements used for well depths of less than 8,000 feet, and can be used with accelerators and retarders to cover a wide range of well depths and temperatures.

The middle one-third of the test casing was filled with saturated sand between the steel casings.

The top one-third of the test casing was filled with saturated gravel in the space between the steel casings.

006209

The inside of the HDPE and the annular space between the HDPE and 12-inch steel casing was filled with water.

Seismic monitors were set up to monitor the seismic effect of the charges and the surface emissions as a result of the test shots.

A 10-foot perforating gun, loaded with forty 34-gram conical shaped charges, was lowered and approximately centered into the 10-3/4 inch HDPE casing.

The shots were detonated, the casings were pulled from the test hole, and the casings were disassembled.

Of the 40 total shots detonated, 39 of the shots penetrated all five strings of casing for a 97.5% efficiency rating. The fortieth shot penetrated four of the five casing strings and heavily dented the outer-most 20-inch casing.

Of a possible 200 perforations in all five casing strings, 199 perforations were made for 99.5% efficiency. The one shot that did not penetrate all five strings of casing was the bottom shot in the cemented casing layers.

Seismic data confirmed that these shots would remain well within the seismic parameters established for the CPP work area.

Demonstration of successful perforation of a five-casing string well completion similar to the injection well was provided by this earlier testing. Results of this testing is provided in the reports "Results of Perforation Testing", MK-Environmental, September, 1989, and "Perforation Test", Fenix and Scisson, September, 1989.

Mobilization and Orientation

Mobilization for the abandonment began on September 23, 1989. All personnel directly involved with the actual work on the site went through the Site Orientation. Radiation and respiratory training was given to all personnel requiring the training.

All equipment was brought on-site ready for beginning of operations by September 29, 1989.

Perforating and Cementing Operations

Refer to Appendices B and C for daily operating reports and the cementer's job log respectively. Results of daily seismic data are reported in Appendix D.

All equipment required for the operations was on-site. Perforating and cementing operations began on October 5, 1989.

A perforating gun was run into the 10-3/4 inch casing to a depth of 475 feet. This was done to verify the bottom of the well bore. the gun rested on top of the silt sediment layer which was identified by previous soil sampling work by the USGS as being moderately consolidated. The fact that the sediment supported the weight of the perforating gun indicates that the sediment would act as a

006209

support to the initial cement plug. the well bore was perforated from 475 feet to 450 feet using three perforating guns containing a total of 100 perforating shots of 34 gram conical shaped charges, providing a density of four shots per foot (spf). All charges throughout the project were 34 grams. Table 1 contains a summary of perforating and grouting. Figure 1 is an as-built abandonment schematic.

The USGS ran a television camera in the hole and verified the perforations from 450 feet to 465 feet. The camera entered disturbed, murky water and was unable to obtain a clear view below 465 feet. The water was murky due to ash residue from perforating.

The cement equipment was rigged up and 63 barrels of fresh water was pumped into the formation at 0 PSI pressure. 300 sacks (65 barrels) of class "G" cement with 2% calcium chloride (CaCl) to accelerate the setting time was mixed and pumped into the well at 0 pump pressure. The cement was displaced with 33 barrels of water to a calculated depth of 450 feet. The well was shut-in with 0 PSI pressures.

Prior to perforating and cementing the second interval from 450 feet to 420 feet, a depth determination log was run in the well ore to determine the top of the cement. The top of the cement was measured at 452 feet. A total of about 63 barrels, 354 cubic feet (cf), of cement was displaced outside of the HDPE, into the well bore, and the adjacent formation. Due to hydrostatic equilibrium, the level of the cement outside of the HDPE would be at the same level of the cement measured inside the HDPE at 452 feet. Because of the consolidated nature of the sediment at 475 feet, it is expected that the well is sealed from 452 to 475 feet.

The interval from 450 to 420 feet was perforated with four shots per foot using 120 conical-shaped charges of 34-grams per shot. Fresh water was pumped at a 200 psi pumping pressure at a rate of four barrels per minute (bpm) into the formation. 160 sacks (approximately 33.5 barrels) of cement were mixed and pumped at 4 bpm at a pumping pressure of 200 psi. The cement was displaced with 30.5 barrels of water. Immediate shut-in pressure was 100 psi. The next working day, the cement level was measured at 422 feet, resulting in about 31.1 barrels (175 cf) of cement displacement into the well bore and adjacent formation.

The well was then perforated with four shots per foot from 420 feet to 395 feet and with two shots per foot from 395 feet to 390 feet. The circulation test indicated a porous formation, because of the 300 psi pumping pressure falling to 0 psi when pumping stopped. Therefore, 300 sacks (65 barrels) of cement with 2% CaCl was mixed and pumped at 4 bpm at a 0 psi pumping pressure. The cement was displaced with 28 barrels of fresh water. The cement level was measured at 396 feet the following day, providing a displacement of 62.9 barrels (335 cf) of cement into the well bore and adjacent formation from 396 to 422 feet.

The casings were then perforated with two shots per foot from 390 feet to 360 feet with a total of 60 shots. The circulation test indicated a high porosity because of 0 pumping pressure at 4 bpm. The cementers mixed and pumped 300 sacks (65 barrels) of cement with 2% CaCl at a rate of 4 bpm and a pumping pressure

006209

of 200 psi. The cement was displaced with 25.5 barrels of water at a rate of 2 bpm at a 200 psi pumping pressure. Immediate shut-in pressure was 0 psi.

It was observed that the vault contained about five feet of fluid. (See Figure 2 for vault layout) A measurement of the vault floor the next morning indicated cement displacement in the vault from 23.5 feet to 21.4 feet. The water level in the vault was measured at 19.1 feet. The cement was measured inside the HDPE liner at 140 feet from the surface. Calculations indicate a displacement of 20.42 barrels (236 cf) of cement into the well bore and adjacent formation. Again, due to hydrostatic equilibrium, it is expected that the cement level outside of the HDPE is at the same level as the cement inside of the HDPE liner at 140 feet.

Measures were taken to confirm a complete cement plug across the well bore. The water level measured inside the HDPE at 52 feet indicated a possible breech in the HDPE or in the riser assembly. This amount of water in the pipe represents about four barrels of the total of 25.5 barrels of water used for displacement. To ascertain leakage, six barrels of water were pumped into the well. Water entrance into the vault was observed at about 0.25 bpm. To try and define if the water loss was occurring through the HDPE or through the riser pipe assembly at the surface, the USGS performed a television camera survey of the well bore. The seal assembly appeared intact. Observation of the HDPE liner could only be made to about 50 feet because of murky water encountered at this depth.

A telephone conference call was held to discuss and evaluate the condition of the well and to establish procedures for further abandonment. Participants in the discussions were F&S, WINCO, MK-FIC, MK-Environmental Services, USGS, DOE-ID, and the IDWR. It was determined that a perforation/water loss test would be performed to evaluate an across-the-well bore seal.

The perforating gun was lowered in the well bore to perforate with two shots at 130 feet. The water level was measured at 27 feet. After firing, the fluid level in the casing dropped from 27 feet to 49.5 feet and stabilized. Stabilization of the water level indicated that water was not being lost through the underlying cement plug and verified an effective seal across the well bore.

A cement level of 140 feet can be further supported by the calculated cement displacement. The well had been completed in 1986 at the surface with non-shrink grout plugs placed five feet in depth between the 12-inch and 16-inch casing annulus and between the 16-inch and 18-inch casing annulus. The bottom of these casings are above the 390- to 360-foot cementing intervals, occurring at 320 and 180 feet, respectively. In addition, gravel pack was installed in all casing annuli outside of the 12-inch casing. Displacement calculations of 20.42 barrels (236 cf) of cement over 256 feet of borehole volume (from 396 to 140 feet), omitting the 12- to 16-inch and the 16- to 18-inch annuli, provides a calculated gravel pack porosity of about 25%. This value is consistent with known porosities of naturally-occurring gravels ranging from 25% to 45% and for sand and gravel mixes which range from 10% to 55%.

It is further conjectured that overlying sedimentary zones have sloughed against the outside casing walls and were probably dry prior to abandonment. As such, water being displaced during circulation would have "wetted" these sediments,

006209

causing them to swell and, therefore, restricting grout movement into these formations.

In addition, the viscosity of a cement slurry being displaced through dry soil and rock is greatly increased because of water removed from the slurry mix by absorption by the soil and rock. This also causes the cement to hydrate sooner creating an accelerated setting time which then begins sealing the pores of soil and rock preventing further migration.

Two perforating runs were made to perforate from 130 feet to 110 feet. A circulation pumping pressure of 150 psi at 4.5 bpm indicated a porous formation. The cementer pumped 55 sacks (11 barrels) of cement with 2% CaCl at 3 bpm at 200 psi. The cement was displaced through the HDPE casing with 8 barrels of water at 4 bpm and a pumping pressure of 250 psi. The immediate shut-in pressure was 0 psi. The following day, the cement was measured at 108 feet. Cement was measured in the vault at 21.1 feet. Therefore, about 5 barrels (28 cf) of cement were displaced into the borehole and adjacent formation. This provided a seal in the well from 108 feet to 140 feet.

Perforating guns were run into the hole and the well was perforated from 107 feet to 27 feet. A circulation test was run after each 10-foot perforating interval. The injection rate varied from 3 bpm to 5 bpm at an observed constant 250 psi pumping pressure. This indicated a relatively homogeneous well bore and formation.

The well was cemented with 300 sacks (63 barrels) of cement with 2% CaCl followed with approximately 250 sacks (28 barrels) of cement with no CaCl additive to provide additional grout strength near the surface. Cement was initially pumped at about 5 bpm at a pumping pressure of 275 psi. Cement was observed entering the vault floor after about 20 barrels of cement had been pumped. When approximately 45 barrels of cement had been pumped, the riser pipe assembly abruptly lifted a few inches vertically. The injection rate was reduced from 5 bpm to 2 bpm to reduce pumping pressure on the pipe assembly and to reduce the amount of cement entering the vault. The cement was displaced with one barrel of water to clear the lines from the cementing unit to the riser system. Shut-in pressure was 0 psi.

The following work day, the cement inside the HDPE casing was measured at 40 feet from the surface. The cement in the vault was measured at 18.5 feet. This provides a displacement of about 60 barrels (337 cf) of cement into the borehole and adjacent formation, providing a seal from 40 feet to 108 feet. However, it is expected that some cement extended up to the top of the casings at 24.5 feet and into the vault because of the amount of cement which entered from the bottom of the vault.

Final cementing consisted of pouring 15 sacks (3 barrels) of cement with no CaCl additive into the top of the riser pipe. The top of the cement was measured at 13.2 feet about one hour after final cementing, indicating cement displacement through the 27 to 40 feet interval. The top of the cement stabilized at 17.2 feet below surface, or about 7.3 feet above the top of the well bore. This provides for about 1.5 barrels (8.5 cf) of cement displacement into the borehole and adjacent formation. At a gravel pack porosity of 25%, the required volume

of cement to fill the well bore annulus from 40 feet to about 27.5 feet (the depth of the grout plugs around the 16-inch and 18-inch steel casings) is about 1.3 barrels. A volume of about 0.3 barrels would be required to fill the remaining five feet of borehole around the outside of the 18-inch casing. Therefore, an effective seal was placed from the top of the well bore at 24.5 feet to 40 feet.

006209

Demobilization

All crews were released after the well was sealed to 18.5 feet. Demobilization from the site was completed October 18, 1989 by Fenix & Scisson.

On Wednesday, November 15, 1989, MK-FIC poured eight cubic yards of 3000 pound design mix grout into the vault at the top of the well. This filled the vault from 18.5 feet to 5.0 feet.

Then on Monday, November 20, 1989, MK-FIC poured approximately five cubic yards of 3000 pound design mix grout into the vault. This filled the vault from 5.0 feet to the top of the ring at the surface.

CONCLUSIONS

Radiation monitoring of all downhole equipment and cable used in and out of the well bore was conducted by WINCO Health Physics to monitor contamination. In addition, air at the wellhead was monitored. No contamination was encountered throughout the entire abandonment project.

A total of about 245 barrels (1,376 cf or 51 yd^3) of cement was displaced through the 10-3/4 inch HDPE liner and into the remaining casing(s), 24-inch borehole annuli, and adjacent formation. The total volume of an "open" annulus between the 24-inch borehole and the 10-3/4 inch HDPE is approximately 198 barrels (1,110 cf or 41 yd^3).

Assuming a 25% porosity of the gravel pack and discounting any volume represented by casings, the available volume of the annulus is about 50 barrels (280 cf). Therefore, the volume of grout displaced into the annulus is about four times the volume of available annulus space. This provides for about 195 barrels (1,022 cf) of formational displacement.

The inside of 10-3/4 inch HDPE was sealed from the bottom to a completion level of 17.2 feet below surface with about 72 barrels (404 cf) of grout. The bottom five feet of the vault was filled and sealed with about 57.3 barrels (322 cf) of cement.

Cementing densities of about 15.8 lb/gal were maintained throughout the abandonment except near the top of the wells where 16.2 lb/gal densities were used for greater strength. Compressive strengths of cement samples ranged from about 1,500 psi in 18 hours to approximately 3,500 psi in three days.

On-site seismic recordings during blasting operations verified non-exceedance of an allowable maximum allowable particle velocity of two (2) inches per second.

A final report by Vibra Tech, the seismic subcontractor to the project, is to be completed and will be placed in the project files of MK-FIC.

Based upon circulation and cementing performance, observed cementing level completions, and calculated grout displacement, it is concluded that the well has been effectively sealed for final abandonment of the remaining vaulted area.

006209

TABLE 1

PERFORATION AND CEMENTING SUMMARY

	----PERFORATION----		---------CIRCULATION----------			----------CEMENTING----------			----------DISPLACEMENT----------					-ANNULUS DISPLACEMENT-
DATE	DEPTH INTERVAL (FEET)	SHOTS (SPF)[a]	TOTAL (BARRELS)[b]	RATE (BPM)	PUMP PRESSURE (PSI)	TOTAL (BARRELS)	RATE (BPM)	PUMP PRESSURE (PSI)	TOTAL (BARRELS)	RATE (BPM)	PUMP PRESSURE (PSI)	SHUT-IN PRESSURE (PSI)	CEMENT DEPTH (FEET)[c]	ACTUAL VOLUME DISPLACEMENT[d] (BARRELS)
10/5/89	475-450	4	63	5	0	65	5	0	33	5	0	0	452	63
10/6/89	450-420	4	60	4	200	33.5	4	200	30.5	2.5	200	100	422	31.1
10/9/89	420-390	4/2[e]	60	3.5	300	65	4	0	28	2	0	0	396	62.9
10/10/89	390-360	2	63	4	0	65	4	200	25.5	4	200	0	140	20.4[g]
10/11/89	--	--	6	1	150	--	--	--	--	--	--	--	140	--
10/12/89	130	2	WATER LEVEL DROPPED 22.5 FEET AND STABILIZED											
10/12/89	130-110	2	14.5	4.5	150	11	3	200	8	4	250	0	108	5.0[g]
10/13/89	107- 97	2	7	3	250									
	107- 87	2	7	3	250									
	107- 77	2	7	4	250									
	107- 67	2	7	4	250									
	107- 57	2	15	5	250									
	107- 47	2	5	5	250									
	107- 37	2	10	4	250									
	107- 27	2	10	4	250	91	2	250	1	2	250	0	40	60.0[g]
10/16/89	--	--	--	--	--	3	2	FREE FLOW		--	--	--	14.2	1.5
TOTAL						333.5								243.9

[a] shots per foot, 90 degree phase pattern
[b] 1 barrel equals 42 gallons; 1 cubic yard equals 4.8 barrels
[c] measured from top of vault and insideof 10-3/4 inch HDPE liner
[d] displacement to formation and well bore outside the HDPE liner
[e] 2 shots per foot from 395 to 390 feet
[f] perforated at 10-foot intervals
[g] allowance for volume of grout pumped inside vault

FIGURE 1

PERFORATION AND CEMENTING SCHEDULE

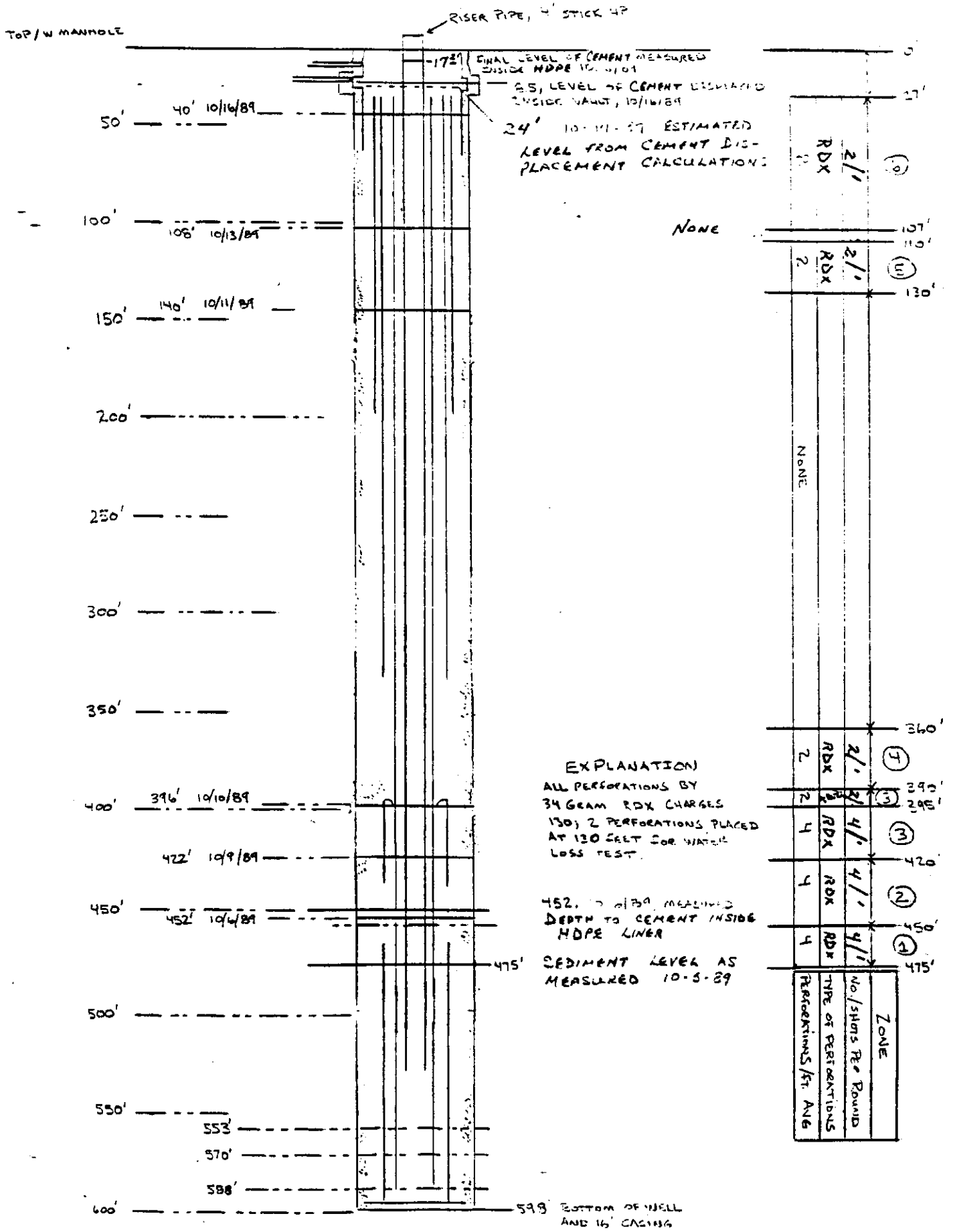

006209

FIGURE 2

INJECTION WELL VAULT AREA SCHEMATIC

006209

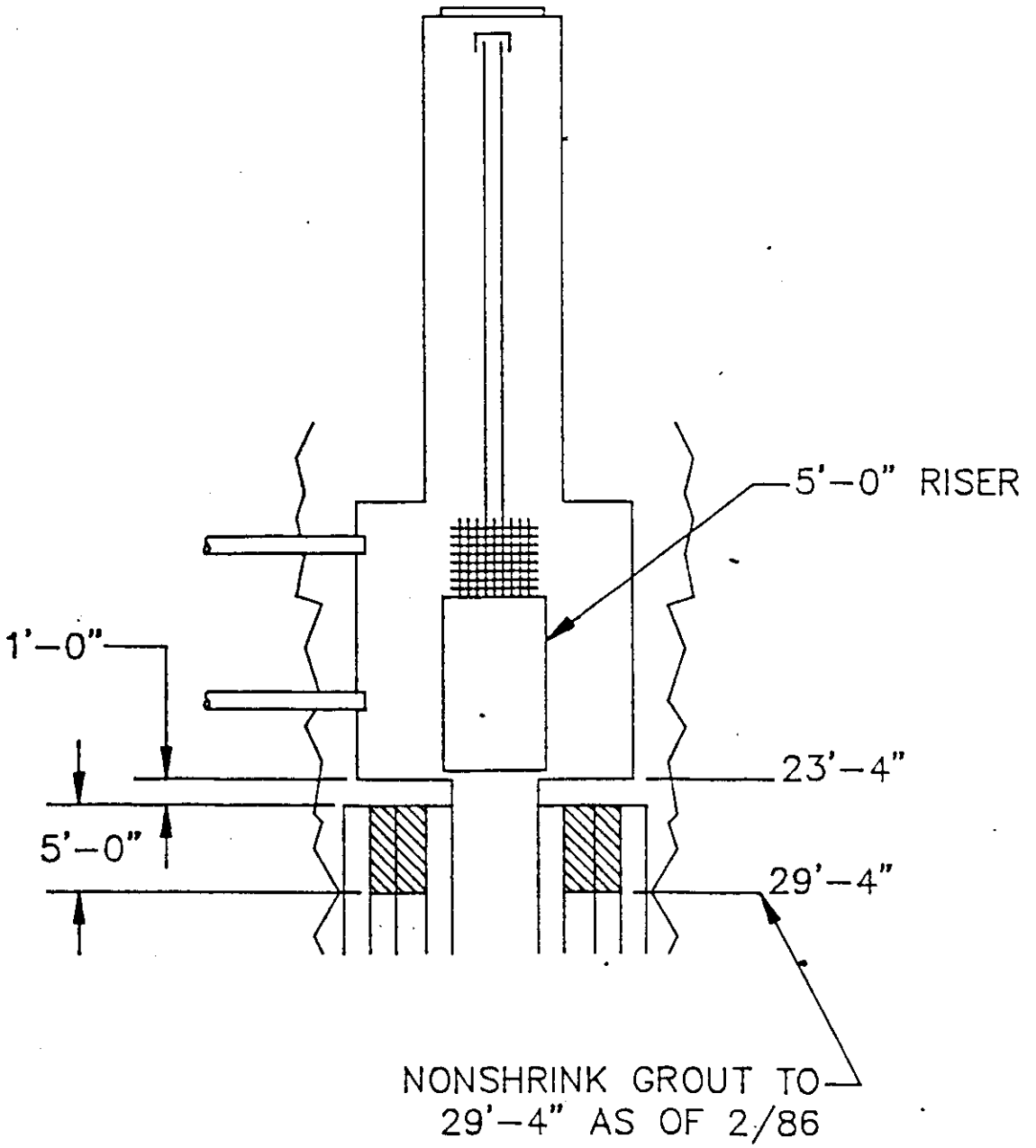

ENLARGED INJECTION WELL VAULT

006209

APPENDIX A

IDF 4700.1
(Rev. 08-88)

U.S. DEPARTMENT OF ENERGY
IDAHO OPERATIONS OFFICE

CONSTRUCTION INTERFACE DOCUMENT

006209

ICD Number W9C289039 | CID Number 01

Subcontractor Field Problem No. _____ | Date 6/27/89

Addressee: Jack Simmonds | Project Title/No.: Injection Well Abandonment Project | Subcontract No.: 289034

Originator/Company: Jim Claver WINCO | References: Drawings/Specifications

Subject: PRE BID TOUR

To Be Completed By Originator

Problem/Deficiency: ☐ CLARIFICATION ☐ CHANGE

N/A

Recommended Solution: COST ☐ yes ☐ no SCHEDULE ☐ yes ☐ no

N/A

To Be Completed By Architect-Engineer/ Project Manager/ Construction Engineer

Solution: Inspection Requirements: _____ ECR No. _____

This is to pay for the PRE BID TOUR of the Injection Well ABANDONMENT Project. (AS PROVIDED IN RFP DOCUMENTS)

Vendor Data Required: ☐ yes ☐ no

*Architect-Engineer/Date _____ Project Manager/Date J E Claver / Bob Moyer 6/27/89 Construction Engineer/Date M L Orr 6/30/89 Pre-neg. By/Date N/A

*Project Manager to determine requirement for AE review/signature approval.

To Be Completed By Subcontractor/Construction Engineer

Disposition:

☐ Clarification - If you consider that the information contained herein does involve a change in price or project completion, immediately notify the Subcontract Administrator. Do not proceed with work until the price or project completion change has been approved by the Subcontract Administrator.

☐ Change Order No. _____ Pursuant to the Changes Article (GP-59.E), the Subcontractor is hereby directed to proceed as follow:

☐ Other _____ Pursuant to Article _____

_____
Construction Engineer/Date

_____ _____
Subcontract Administrator/Date Subcontractor Representative/Date

DIST Signatories, plus CM Computer Operators
DOE Project Mgr _____
OC Field Engr _____
Qual Control _____
Qual Engr _____
A-E _____
Subcontractor _____
Other _____

IDF 4700.1
(Rev. 08-88)

U.S. DEPARTMENT OF ENERGY
IDAHO OPERATIONS OFFICE

CONSTRUCTION INTERFACE DOCUMENT

006209

ICWA Number Y9C289039	CID Number 02
Subcontractor Field Problem No.	Date 7/7/89
Addressee M. ORR	Project Title/No. Injection Well Abandonment
Subcontract No. 289039	
Originator/Company B. MOZES	References: Drawings/Specifications
Subject Well Head Configuration	

To Be Completed By Originator

Problem/Deficiency: ☐ ~~CLARIFICATION~~ ☐ CHANGE

Proposed Subcontractors have requested information on well head configuration for the installation of lubricator plug.

Recommended Solution: COST ☐ yes ☐ no SCHEDULE ☐ yes ☐ no

To Be Completed By Architect-Engineer/ Project Manager/ Construction Engineer

Solution: Inspection Requirements: N/A ECR No N/A

Lubricator plug can be installed using existing stud bolt configuration as shown on attached drawing or they can have the plug welded to the existing liner

Vendor Data Required: ☐ yes ☐ no

*Architect-Engineer/Date	Project Manager/Date	Construction Engineer/Date	Pre-neg. By/Date
	7/7/89	M.L. Orr 7/7/89	N/A

*Project Manager to determine requirement for AE review/signature approval.

Be Completed By Subcontractor/Construction Engineer

Disposition:

☐ Clarification - If you consider that the information contained herein does involve a change in price or project completion, immediately notify the Subcontract Administrator. Do not proceed with work until the price or project completion change has been approved by the Subcontract Administrator.

☐ Change Order No. _____ Pursuant to the Changes Article (GP-59.E), the Subcontractor is hereby directed to proceed as follow:

☐ Other _____ Pursuant to Article _____

Construction Engineer/Date

Subcontract Administrator/Date

Subcontractor Representative/Date

DIST Signatories, plus CM Computer Operators
DOE Project Mgr
OC Field Engr
Qual Control
Qual Engr
A-E
Subcontractor
Other

EXISTING CONDITION

006209

PLATE BOLTED OVER WELL BY 1/2" x 3/4" LONG STUDS WELDED TO 1/8" STAINLESS STEEL LINER. STUDS CAN BE UTILIZED OR THE WELDING TO THE 1/8" LINER IS ACCEPTABLE.

RFP-289039
ATTACHMENT #1
TO ADDENDUM NO. 2

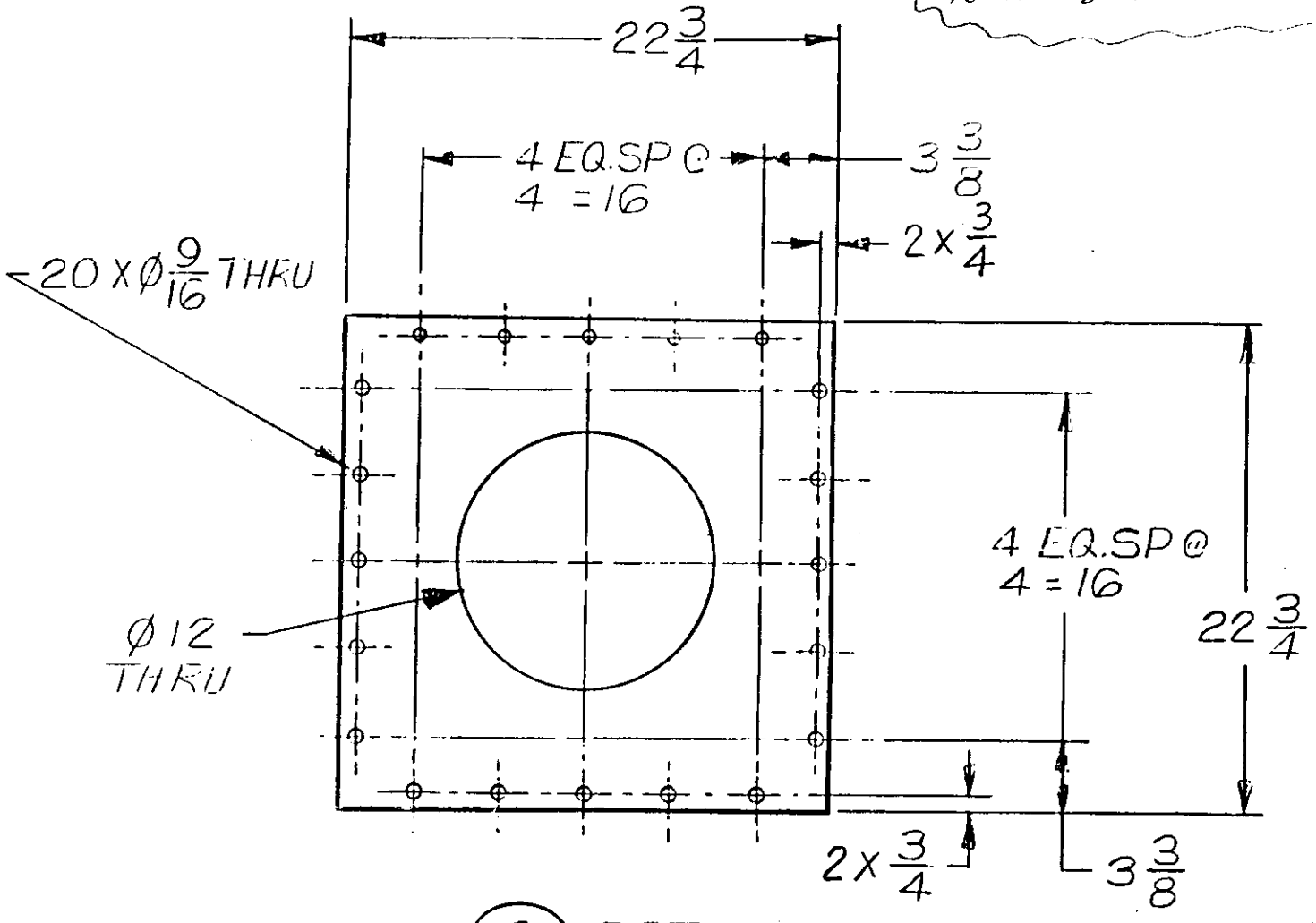

(8) DETAIL

(3) DETAIL

SCALE: 1/8

CONDITION

006209

RFP-289039
ATTACHMENT #2
TO ADDENDUM NO. 2

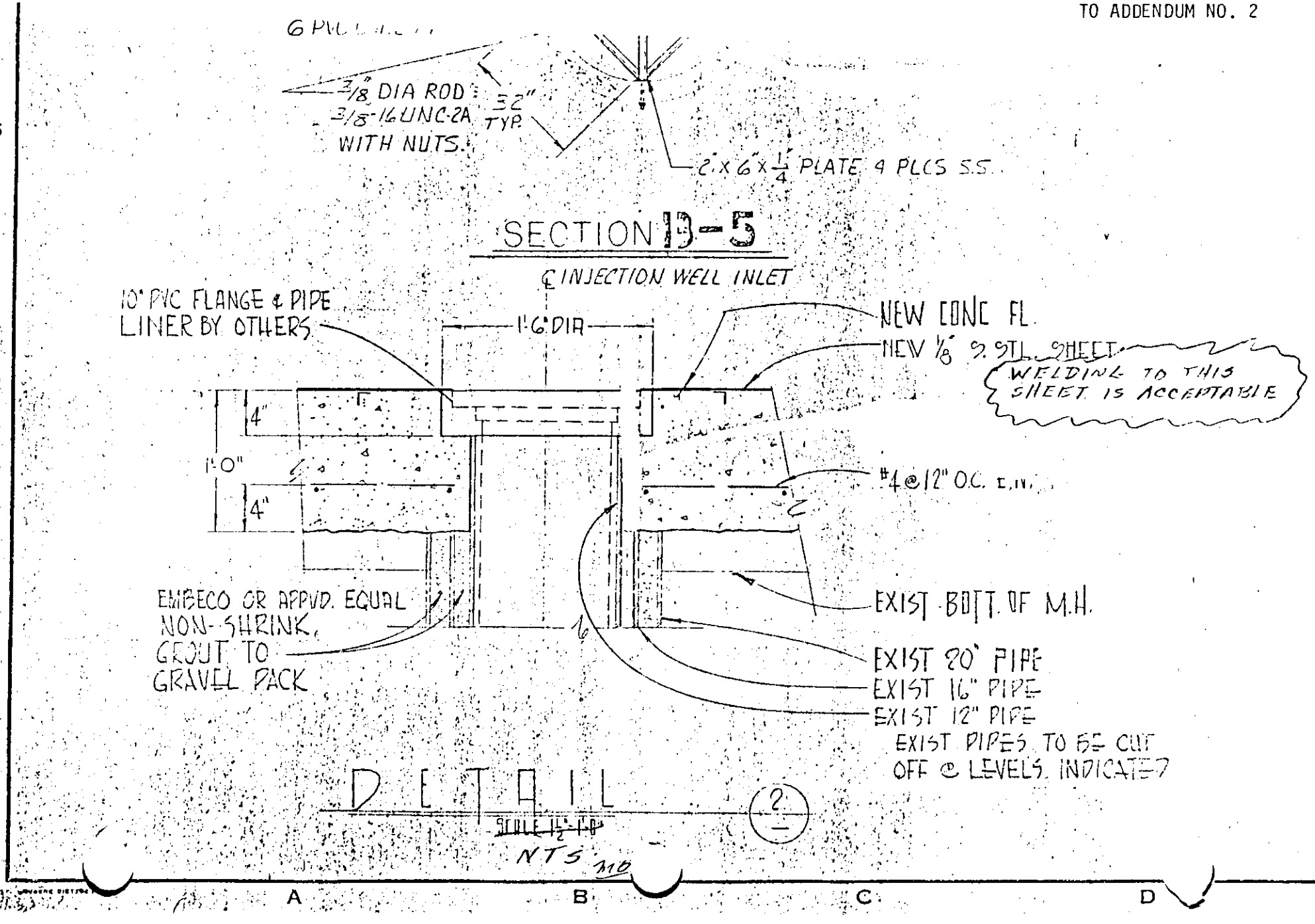

IDF 4700.1
(Rev. 08-88)

U.S. DEPARTMENT OF ENERGY
IDAHO OPERATIONS OFFICE

CONSTRUCTION INTERFACE DOCUMENT

006209

Number W9C289039	CID Number 3
Subcontractor Field Problem No.	Date 9/7/89
Addressee J. Simonds	Project Title/No. Injection Well Abandonment
	Subcontract No. 289039
Originator/Company R. Mozes	References: Drawings/Specifications Drawing 172168 / Spec 02734
Subject Test Set Up Correction	

To Be Completed By Originator

Problem/Deficiency: ☐ CLARIFICATION ☐ CHANGE

A conflict exists between test set up top 1/3 mix between as shown in specs and drawings.

Recommended Solution: COST ☐ yes ☐ no SCHEDULE ☐ yes ☐ no

To Be Completed By Architect-Engineer/ Project Manager/ Construction Engineer

Solution: Inspection Requirements: N/A ECR No.

Drawing is correct — fill top 1/3 as follows
Annular space between 10" and 12" with water.
All other with gravel and water

Vendor Data Required: ☐ yes ☐ no

N/A	9/7/89	9/7/89	9-7-89
*Architect-Engineer/Date	Project Manager/Date	Construction Engineer/Date	Pre-neg. By/Date

*Project Manager to determine requirement for AE review/signature approval.

To Be Completed By Administrator/Construction Engineer

Disposition:

☐ Clarification - If you consider that the information contained herein does involve a change in price or project completion, immediately notify the Subcontract Administrator. Do not proceed with work until the price or project completion change has been approved by the Subcontract Administrator

☑ Change Order No. 1C Pursuant to the Changes Article (GP-59 E), the Subcontractor is hereby directed to proceed as follow

☐ Other _____ Pursuant to Article _____

The annular space in the upper one-third of the test section between the 10" and 12" casings shall be filled with water only. Drawing C-5, Note C is correct. Pre-negotiated at no cost and no schedule extension.

R. T. Burns by JS 9/7/89
Construction Engineer/Date

R. W. Cox by JS 9-7-89
Subcontract Administrator/Date

9-7-89
Subcontractor Representative/Date

DIST Signatories, plus CM Computer Operators
DOE Project Mgr S. SILVERMAN
OC Field Engr J. CLAVER
Qual Control W. McLERRAN
Qual Engr V. ARCHIBALD
A-E
Subcontractor F&S
Other

IDF 4700.1
(Rev 08-88)

U.S. DEPARTMENT OF ENERGY
IDAHO OPERATIONS OFFICE

CONSTRUCTION INTERFACE DOCUMENT

006209

'A Number: 9C2-89039

CID Number: 4

Subcontractor Field Problem No.:

Date: 9/7/89

Addressee: J. Simonds

Project Title/No.: Injection Well Abandonment

Subcontract No.: 289039

Originator/Company: R. MOZES

References: Drawings/Specifications: Drawing 172168

Subject: Drisco Pipe Thickness

To Be Completed By Originator

Problem/Deficiency: ☐ CLARIFICATION ☐ CHANGE

Drawing shows Drisco Pipe Thickness as .997in. actual pipe as manufactured is .977

Recommended Solution: COST ☐ yes ☐ no SCHEDULE ☐ yes ☐ no

To Be Completed By Architect-Engineer/ Project Manager/ Construction Engineer

Solution: Inspection Requirements: N/A ECR No.

Correct pipe thickness to correct Thickness as manufactured requirements to .977in

Vendor Data Required: ☐ yes ☐ no

N/A — *Architect-Engineer/Date

9/7/89 — Project Manager/Date

Jack Simonds for — Construction Engineer/Date 9/7/89

9-7-89 — Pre-neg. By/Date

*Project Manager to determine requirement for AE review/signature approval.

To Be Completed By Administrator/Construction Engineer

Disposition:

☐ Clarification - If you consider that the information contained herein does involve a change in price or project completion, immediately notify the Subcontract Administrator. Do not proceed with work until the price or project completion change has been approved by the Subcontract Administrator.

☑ Change Order No. 2 Pursuant to the Changes Article (GP-59 E), the Subcontractor is hereby directed to proceed as follow:

☐ Other _____ Pursuant to Article _____

The Drisco HDPE pipe wall thickness is .977 inches rather than the .997 inches shown on the drawing. Pre-negotiated at no cost and no schedule extension.

Subco.

R. T. Burns by JS 9-7-89
Construction Engineer/Date

R. W. Cox by JS 9-7-89
Subcontract Administrator/Date

9-7-89
Subcontractor Representative/Date

DIST Signatories, plus CM Computer Operators
DOE Project Mgr S. SILVERMAN
OC Field Engr J. CLAVER
Qual Control W. MCLERRAN
Qual Engr V. ARCHIBALD
A-E
Subcontractor F&S
Other

IDF 4700.1
(Rev 08-88)

U.S. DEPARTMENT OF ENERGY
IDAHO OPERATIONS OFFICE

CONSTRUCTION INTERFACE DOCUMENT

006209

N/A Number: 19C2 89039	CID Number: 5
Subcontractor Field Problem No.	Date: 9/7/89
Addressee: J. Simonds	Project Title/No.: Injection Well Abandonment
Subcontract No.: 289039.	
Originator/Company: B. Mozes	References: Drawings/Specifications: N/A
Subject: Proof of Test Performance	

To Be Completed By Originator

Problem/Deficiency: ☐ CLARIFICATION ☑ CHANGE

Proof of testing does not have any requirement on running a hydro to check perforations.

Recommended Solution: COST ☐ yes ☐ no SCHEDULE ☐ yes ☐ no

To Be Completed By Architect-Engineer/ Project Manager/ Construction Engineer

Solution: Inspection Requirements: ECR No

Have test set up ~~with~~ so that it can be checked for perforations penetration. Pay subcontract costs and overtime to perform test. Test pressures will be directed in the field

Prenegotiated cost $4408 + overtime at $50.00/hr.

Vendor Data Required: ☐ yes ☐ no

N/A	[signature] 9/7/89	[signature] for RT Burns 9-7-89	9-7-89
*Architect-Engineer/Date	Project Manager/Date	Construction Engineer/Date	Pre-neg. By/Date

*Project Manager to determine requirement for AE review/signature approval.

To Be Completed By Subcontract Administrator/Construction Engineer

Disposition:

☐ Clarification - If you consider that the information contained herein does involve a change in price or project completion, immediately notify the Subcontract Administrator. Do not proceed with work until the price or project completion change has been approved by the Subcontract Administrator

☑ Change Order No. 3 Pursuant to the Changes Article (GP-59 E), the Subcontractor is hereby directed to proceed as follow

☐ Other _____ Pursuant to Article _____

Subcontractor shall perform a hydrotest of the test section of the casings to verify penetration during the proof test phase of the project. The sections of the casing shall then be cut to document the test results. Prenegotiated at $4408 for hydrotest and $225.00 for test documentation. No schedule extension.

R. T. Burns by JS 9/7/89
Construction Engineer/Date

R. W. Cox by JS 9/7/89
Subcontract Administrator/Date

[signature]
Subcontractor Representative/Date

DIST Signatories, plus CM Computer Operators
DOE Project Mgr. S. SILVERMAN
OC Field Engr J. CLAVER
Qual Control W. MCLERRAN
Qual Engr V. ARCHIBALD
A-E
Subcontractor F&S
Other

IDF 4700.1
(Rev. 08-88)

U.S. DEPARTMENT OF ENERGY
IDAHO OPERATIONS OFFICE

CONSTRUCTION INTERFACE DOCUMENT

006209

2

Number W9C2-89039	CID Number 6
Subcontractor Field Problem No. NA	Date 9-28-89
Addressee R. BURNS	Project Title/No. INJECTION WELL ABANDONMENT
Subcontract No. S289039	
Originator/Company J. PICKRELL WINCO X4129	References: Drawings/Specifications
Subject DELAY CONSTRUCTION START	

To Be Completed By Originator

Problem/Deficiency ☐ CLARIFICATION ☒ CHANGE

PROJECT CANNOT START UNTIL APPROVAL IS RECEIVED FROM THE STATE OF IDAHO WHICH WILL BE RECEIVED ON OCT. 5.

Recommended Solution: COST ☐ yes ☐ no SCHEDULE ☒ yes ☐ no

DELAY CONSTRUCTION START FROM OCT. 2, 1989 TO OCT. 5, 1989 (3 DAYS)

To Be Completed By Architect-Engineer/ Project Manager/ Construction Engineer

Solution: Inspection Requirements NO CHANGE ECR No

RECOMMENDED SOLUTION IS ACCEPTABLE

Vendor Data Required: ☐ yes ☒ no

NA	J Pickrell for B. Mozes 9.28.89	R.T. Burns 9/29/89	10/4/89
*Architect-Engineer/Date	Project Manager/Date	Construction Engineer/Date	Pre-neg. By/Date

*Project Manager to determine requirement for AE review/signature approval.

To Be Completed By Subcontract Administrator/Construction Engineer

Disposition:

☐ Clarification - If you consider that the information contained herein does involve a change in price or project completion, immediately notify the Subcontract Administrator. Do not proceed with work until the price or project completion change has been approved by the Subcontract Administrator.

☒ Change Order No. 4 Pursuant to the Changes Article (GP 59 E) the Subcontractor is hereby directed to proceed as follow

☐ Other _____ Pursuant to Article _____

THE SUBCONTRACTOR IS ADVISED HEREBY THAT PERFORMANCE OF WORK AT THE INJECTION WELL WORK-SITE SHALL NOT BEGIN UNTIL START-OF-BUSINESS ON OCTOBER 5, 1989.

R.T. Burns 10/2/89
Construction Engineer/Date

[signature] 10-2-89
Subcontract Administrator/Date

[signature]
Subcontractor Representative/Date

DIST Signatories plus CM Computer Operator
DOE Project Mgr B. EDGERTON
OC Field Engr J. PICKRELL
Qual Control W. MCLERRAN
Qual Engr
A-E
Subcontractor FENIX & SCISS
Other

IDF 4700.1
(Rev 08-88)

U.S. DEPARTMENT OF ENERGY
IDAHO OPERATIONS OFFICE

CONSTRUCTION INTERFACE DOCUMENT

OCT 4 1989

006200

PAGE 1 OF 6

WA Number W9CZ-89039	CID Number 7 5
Subcontractor Field Problem No. NA	Date 9-28-89
Addressee R. BURNS	Project Title/No. INJECTION WELL ABANDONMENT — Subcontract No. S289039
Originator/Company J. PICKRELL WINCO K4129	References: Drawings/Specifications
Subject Health Physics Survey of Earthmoving & Related Equip.	

To Be Completed By Originator

Problem/Deficiency: ☐ CLARIFICATION ☒ CHANGE

NEW REQUIRENTS FOR HP SURVEY OF EARTH MOVING EQUIP. NEED ADDED TO SUBCONTRACTORS CONTRACT DOCUMENTS.

Recommended Solution: COST ☐ yes ☐ no SCHEDULE ☐ yes ☐ no

ADD THE ATT'D INFORMATION TO SUBCONTRACTORS CONTRACT DOCUMENTS

To Be Completed By Architect-Engineer/ Project Manager/ Construction Engineer

Solution: Inspection Requirements: NO CHANGE ECR No

RECOMMENDED SOLUTION IS ACCEPTABLE

Vendor Data Required: ☐ yes ☒ no

NA	J Pickrell for B. Mozes 9-28-89	R.T. Burns 9/29/89	10/4/89
*Architect-Engineer/Date	Project Manager/Date	Construction Engineer/Date	Pre-neg. By/Date

*Project Manager to determine requirement for AE review/signature approval.

To Be Completed By Subcontract Administrator/Construction Engineer

Disposition:

☐ Clarification - If you consider that the information contained herein does involve a change in price or project completion, immediately notify the Subcontract Administrator. Do not proceed with work until the price or project completion change has been approved by the Subcontract Administrator.

☒ Change Order No. 6 Pursuant to the Changes Article (GP 59 E), the Subcontractor is hereby directed to proceed as follow

☐ Other _____ Pursuant to Article _____

THE OPERATING CONTRACTOR HAS REQUESTED THAT THESUBJECT SURVEY BE PERFORMED ON THE SUBCONTRACTOR'S EQUIPMENTBECAUSE OF THE COMPLEXITY AND SIZE OF THE EQUIPMENT, EVEN THOUGH THE EQUIPMENT IS NOT OF EARTH MOVING TYPE. ACCORDINGLY, THE SUBCONTRACTOR'S WORK SCOPE SHALL BE PERFORMED IN ACCORDANCE WITH THE SURVEY.

Construction Engineer/Date

[signature] 10/5/89
Subcontract Administrator/Date

[signature] Jack Simons for RT Burns 10-6-89
Subcontractor Representative/Date

DIST Signatories, plus CM Computer Operators
DOE Project Mgr. S. SILVERMAN
OC Field Engr. J. PICKRELL
Qual Contr. W. MCLERRAN
Qual Engr. R. MOZES
A-E
Subcontractor FENIX & SCISSO
Other

HEALTH PHYSICS SURVEYS OF EARTH MOVING AND RELATED EQUIPMENT

All earth-moving and related equipment including, but not limited to, dump trucks, front-end loaders, backhoes, rollers, tampers, compactors, crane buckets, etc. must be surveyed by Health Physics prior to start of work and upon completion of work. Equipment shall not be removed from the INEL, used, or taken to another facility (including the FPR Project) without this survey taking place.

These surveys shall take approximately eight hours to perform and will normally be performed on a backshift. The surveys shall be requested by submitting a completed "Request for HP Survey of Earth Moving Equipment" form to the MK-FIC Construction Engineer (CE). Forms are available from the CE at CPP 698. Forms must be submitted to the CE before 2:00 PM of the working day prior to the date on which the survey is requested. Completed request forms shall be returned to the MK-FIC Construction Engineer upon completion of the survey.

All equipment shall be visually inspected for oil, hydraulic or other leaks and repairs made before equipment is brought on-site. Prior to the survey, the Subcontractor shall clean his equipment by high pressure water, steam or sandblasting as appropriate to insure that a thorough HP survey can be performed. Precautions shall be taken to keep equipment fluids, filters, etc. from absorbing possible contaminated particles when working in areas in which such precautions are required.

The sequence to be followed for this process will be, for example, as follows:

1. The Subcontractor submits a "Request for HP Survey of Equipment" form on Thursday to the CE prior to 2:00 PM for his work scheduled to start Monday morning.

2. While the request is being set up within MK-Ferguson of Idaho Company (MK-FIC) and the Operating Contractor, the Subcontractor will inspect his equipment for leaks of fluids, etc., and make repairs as needed. Equipment will be cleaned as needed prior to coming on-site.

3. Friday morning the Construction Engineer will notify the Subcontractor when the survey will take place Friday evening or at another time over the weekend, and where the equipment must be parked by 4:00 PM Friday to be surveyed.

4. On backshift Friday or over the weekend, the equipment will be surveyed.

5. On Monday morning by 9:00 AM, the equipment will be authorized access to the facility if clean or the Subcontractor will be directed to remove the equipment if not clean.

5. Equipment surveys can be set up for any day of the week and are not restricted to only weekends.

In order to remove equipment from CPP once a project is complete, the Subcontractor shall follow the process outlined below:

1. By 2:00 PM of the day prior to the desired survey, a completed "Request for HP Survey" form should be submitted to the assigned CE.

2. The Subcontractor shall make sure that the equipment is cleaned of dirt, gravel, rock, etc. from the bed, tracks, wheels, and such per the HP's instructions at the job site. Fluids shall be cleaned up per the directions of the Industrial Hygienist.

3. When the survey is set-up, the CE will notify the Subcontractor of the time and location where the equipment is to be taken for the survey.

4. The next working morning (by 9:00 AM), the Subcontractor will pick up his surveyed equipment if green-tagged and remove it from CPP. All green-tagged equipment must be removed from CPP within 24 hours of completion of the survey. If equipment is found to be contaminated during the survey, it will then be treated as contaminated equipment and will be decontaminated per the subcontract documents.

The Subcontractor shall be backcharged the actual cost plus the Contractor's cost should the equipment require a re-survey prior to leaving CPP. [illegible]

006209

REQUEST FOR HP SURVEY OF EARTH MOVING EQUIPMENT

1. Requestor _____

2. Project Title _____

   Subcontract No. _____

3. Equipment Requiring Survey (list each piece):

   _____

   _____

   _____

   _____

4. Date Survey is requested for: _____
   (date) (time)

5. Signature of Requestor _____

   _____
   (date & time submitted)

6. Signature of Construction Engineer _____

   _____
   (date & time received)

7. Signature of HP Representative Upon Notification _____

   _____
   (date & time received)

8. Signature of HP Representative Completing Survey _____

   _____
   (date & time completed)

Distribution:
Signatures
Subcontract Administrator
O/C Project Manager _____

EARTH MOVING EQUIPMENT SURVEY FLOWCHART FOR ENTRY INTO CPP

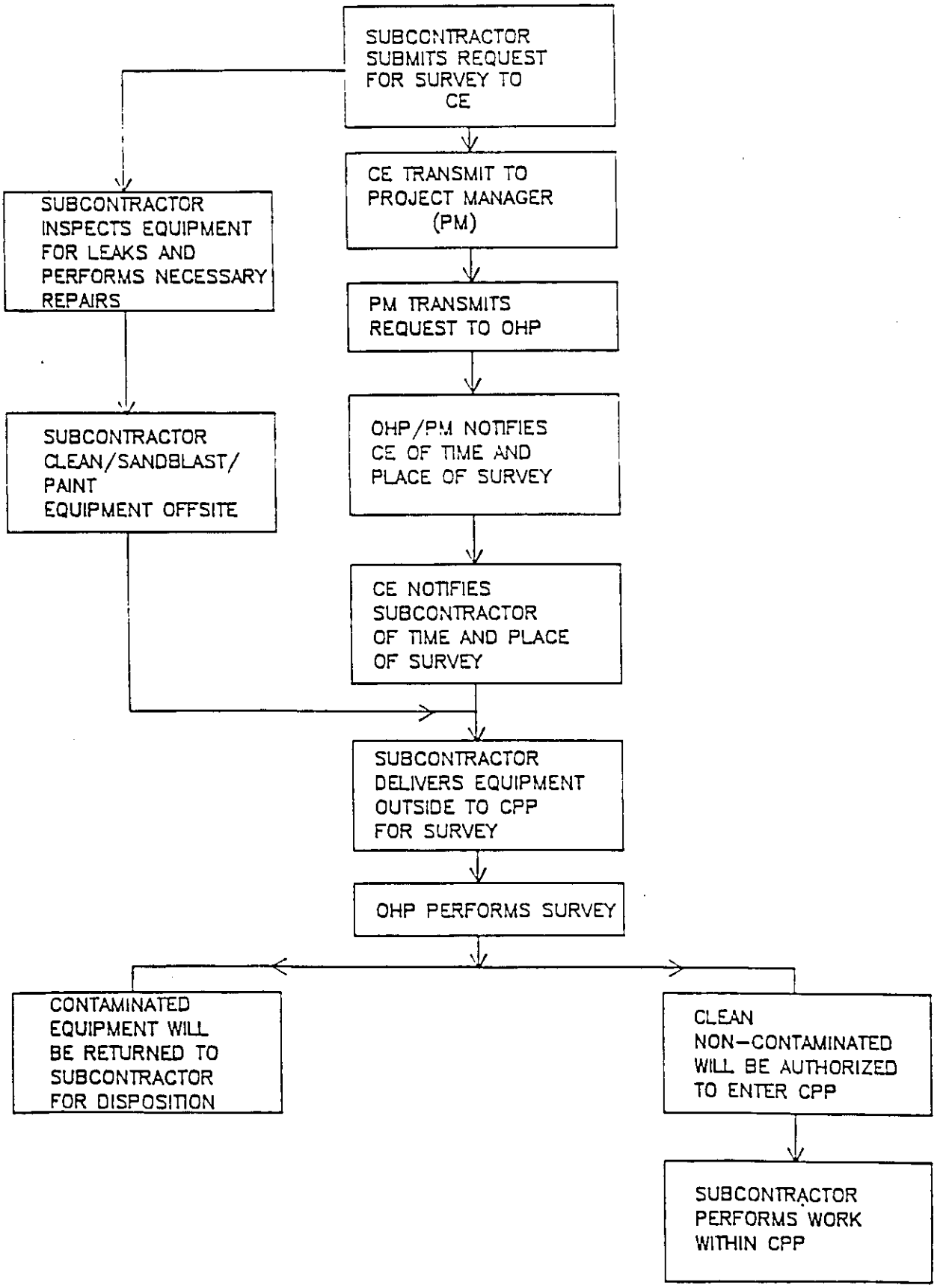

EARTH MOVING EQUIPMENT SURVEY FLOWCHART FOR REMOVAL FROM CPP

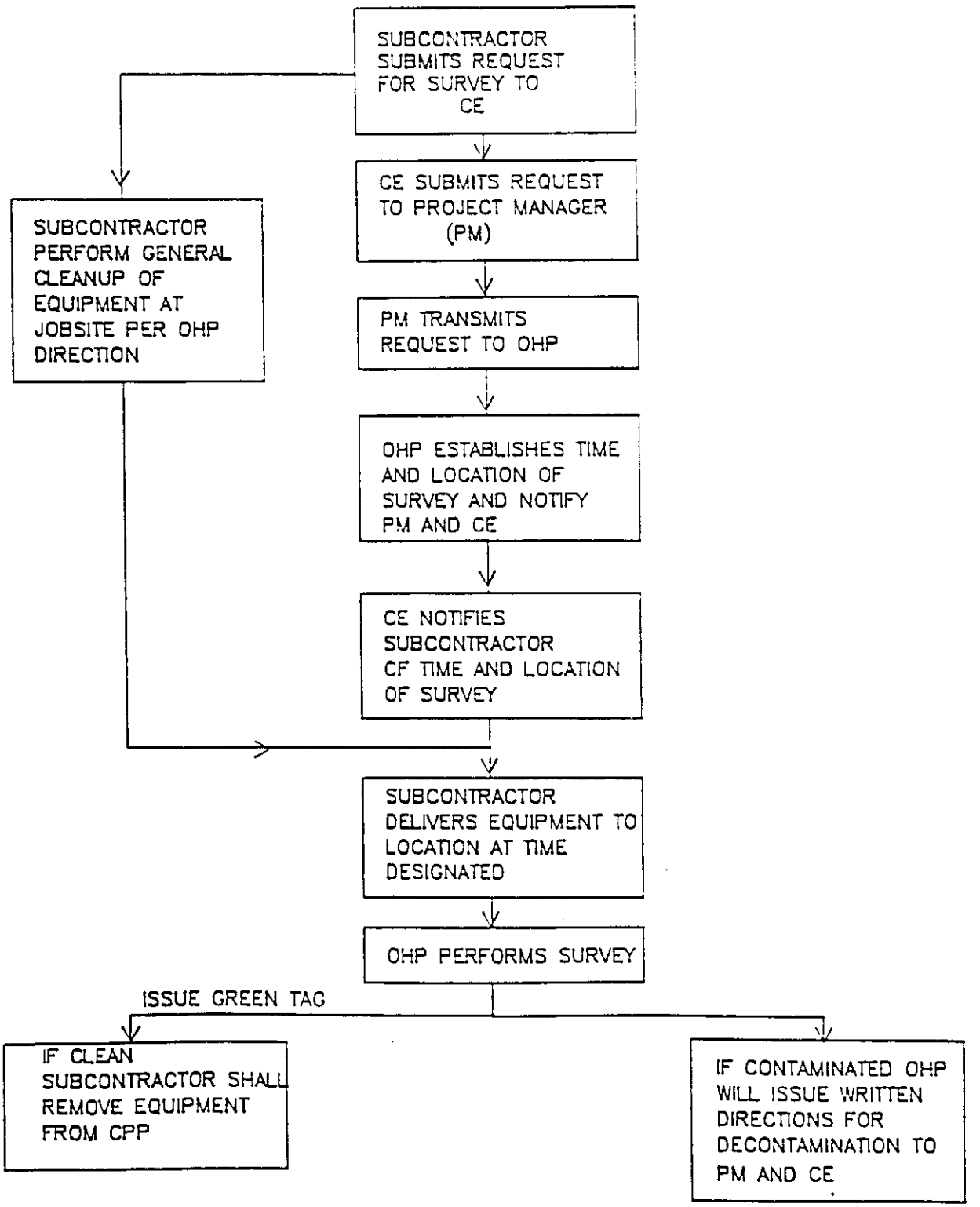

IDF 4700.1
(Rev 08-88)

U.S. DEPARTMENT OF ENERGY
IDAHO OPERATIONS OFFICE

CONSTRUCTION INTERFACE DOCUMENT

ICWA Number W9C2-89039 | CID Number 8 2

Subcontractor Field Problem No. NA | Date 10-5-89

Addressee RANDY BURNS | Project Title/No. INJECTION WELL ABANDONMENT | Subcontract No. S2 89039

Originator/Company JACKIE PICKRELL WINCO | References: Drawings/Specifications SPECIAL CONDITIONS

Subject RADIATION WORK CONTROL PROCEDURE

To Be Completed By Originator

Problem/Deficiency: ☐ CLARIFICATION ☒ CHANGE

NEED TO ADD RAD. WORK CONTROL PROCEDURE TO SPECIAL CONDITIONS.

Recommended Solution: COST ☐ yes ☐ no SCHEDULE ☐ yes ☐ no

ADD RAD. WORK CONTROL PROC. TO SPECIAL COND. (ATT'D)

To Be Completed By Architect-Engineer/ Project Manager/ Construction Engineer

Solution: Inspection Requirements: NO CHANGE ECR No.

RECOMMENDED SOLUTION IS ACCEPTABLE

Vendor Data Required: ☐ yes ☒ no

NA *Architect-Engineer/Date | 10-5-89 Project Manager/Date | Construction Engineer/Date 10/5/89 | Pre-neg. By/Date

*Project Manager to determine requirement for AE review/signature approval.

To Be Completed By Subcontract Administrator/Construction Engineer

Disposition:

☐ Clarification - If you consider that the information contained herein does involve a change in price or project completion, immediately notify the Subcontract Administrator. Do not proceed with work until the price or project completion change has been approved by the Subcontract Administrator.

☒ Change Order No. 5 Pursuant to the Changes Article (GP-59 E), the Subcontractor is hereby directed to proceed as follow

☐ Other _____ Pursuant to Article _____

THE PROCEDURE REFERENCED ABOVE IS HEREBY INCORPORATED INTO SUBCONTRACT NO. S-289039.

Construction Engineer/Date

10-6-89
Subcontract Administrator/Date

Subcontractor Representative/Date

DIST Signatories, plus CM Computer Operators
DOE Project Mgr S. SILVERMAN
OC Field Engr J. PICKRELL
Qual Control W. MCLERRAN
Qual Engr
A-E
Subcontractor FENIX&SCISSO
Other

C10
5289039
PAGE 2 OF 4

RADIOLOGICAL WORK CONTROL PROCEDURE FOR INJECTION WELL ABANDONMENT

Prepared By: J. L. Pickrell/G. Clarke

Approvals

	Signature	Date
Project Mgr.:	J Pickrell for B. Moses	10-4-89
Rad. Eng.:	[illegible]	10/3/89
OHP:	[illegible]	10-4-89

1.0 PURPOSE

The scope of this project is to perform the following work to complete injection well abandonment.

2.0 RESTRICTIONS

2.1 RADIOLOGICAL EVALUATION

(a) The Well pit/basement area is currently a clean area. The well has a potential for internal contamination. The general body radiation field in the work area is less than 1 mr/hr beta-gamma.

3.0 PROCEDURE

3.1 PREREQUISITES

(a) A Construction Safe Work Permit (CSWP) shall be required for each shift.

(b) The HP technician shall survey the work area periodically to determine radiological conditions during work activities to ensure levels do not exceed those at start of the job.

(c) HP technician shall monitor well head extension using CAMs or other air sampling equipment during detonation and opening of the extension tube after a detonation. Air sampling shall be performed during the cutting of the guns.

(d) All workers shall be radiation worker and respirator trained and qualified to work in the area if radioactive contamination is found.

(e) A pre-job briefing shall be held each shift for workers, by supervision, with HP personnel to describe any changes since the last shift. This shall include: radiological conditions, work restrictions, ALARA considerations, anti-C requirements, respiratory protection, hazards, special controls and any other

C10
5289039
PAGE 3 of 4

instructions necessary to perform the job safely. A pre-job briefing checklist (Form WINCO 5903) shall be completed and attached to the CSWP.

(f) All personnel at the job site shall wear as a minimum plant blues. If contamination is found anti-c clothing shall be prescibed depending on the levels. This equipment shall be GFE.

(g) All necessary tools, equipment and materials shall be assembled in the work area prior to starting the job. The HP shall survey all equipment, tools, waste, etc., removed from the job site assuring that segregation, containment, and disposal are correctly performed.

(h) Full time HP coverage shall be required when detonating charges and removing equipment from the well. All equipment removed from the well shall be surveyed to determine disposition. Survey for loose and fixed contamination. Any time radiological conditions change which could affect job safety, the job will be terminated until an evaluation is made by OHP Supervision, the project and/or field engineer, construction engineer, radiological engineer and construction foreman.

(i) A drain trough shall be staged at ground level, at the extension tube, such that it can drain back into the extension tube.

(j) All radioactive waste shall be disposed of each shift.

(k) All workers shall survey for beta/gamma and alpha contamination immediately upon leaving the work area.

(l) Nose swabs and sputum samples shall be taken as deemed necessary by OHP. If any facial contamination is found, bioassay samples may be required by WINCO Radiation Technology.

(m) All construction workers leaving Zone III areas shall wash before changing into personal clothing and leaving the plant.

(n) The work area should be staged with plywood and tu-tuff on the groud to give a stable working platform.

3.2 Work Performance:

1. An approved Blasting (Perforation) and grouting procedure shall be used in conjunction with this procedure.

2. Guns removed from the well after detonation:

   a. Drain and remove the end caps on the guns and send to Decon if required.

   b. Place gun in a waste box, cut in half while reaching inside the box using a porta-ban and HEPA exhauster or vacuum above the cutting area. Use Zone I conditions to perform this step.

   Note: If a gun has not completely detonated do not cut in half or place in the waste box. Await further evaluation by projects and the detonation expert.

IDF 4700.1
(Rev. 08-88)

U.S. DEPARTMENT OF ENERGY
IDAHO OPERATIONS OFFICE

CONSTRUCTION INTERFACE DOCUMENT

ICWA Number | CID Number 9 2

To Be Completed By Originator

Subcontractor Field Problem No. 1 | Date 10-6-89

Addressee: R. T. Burns | Project Title/No.: Injection Well Abandonment | Subcontract No.: S-259039

Originator/Company: Fenix & Scisson | References: Drawings/Specifications: N/A

Subject: Depth determination of Cement Plug

Problem/Deficiency: ☐ CLARIFICATION ☒ CHANGE

Cement Plug needs to have depth determined before running a perforating gun in the hole. If Cement is not at an acceptable depth, gun must be fired before removing from hole.

Recommended Solution: COST ☒ yes ☐ no SCHEDULE ☐ yes ☒ no

Run Sinker bar prior to running perforating guns.

To Be Completed By Architect-Engineer/ Project Manager/ Construction Engineer

Solution: Inspection Requirements: Record readings | ECR No. N/A

Solution recommended is acceptable. Measurement should be taken each day prior to perforating

Vendor Data Required: ☐ yes ☐ no

*Architect-Engineer/Date	Project Manager/Date	Construction Engineer/Date	Pre-neg. By/Date
	10/6/89	10/6/89	10/10/89

*Project Manager to determine requirement for AE review/signature approval.

To Be Completed By Subcontract Administrator/Construction Engineer

Disposition:

☐ Clarification - If you consider that the information contained herein does involve a change in price or project completion, immediately notify the Subcontract Administrator. Do not proceed with work until the price or project completion change has been approved by the Subcontract Administrator.

☒ Change Order No. 7 Pursuant to the Changes Article (GP-59 E), the Subcontractor is hereby directed to proceed as follow:

☐ Other _____ Pursuant to Article _____

THE SUBCONTRACT WORK SCOPE SHALL BE PERFORMED IN ACCORDANCE WITH THE ABOVE AS PROVIDED BY THE OPERATING CONTRACTOR.

Construction Engineer/Date

10/6/89
Subcontract Administrator/Date

Jack Simmons for RTBurns
Subcontractor Representative/Date 10-6-89

DIST: Signatories, plus CM Computer Control
DOE Project Mgr. S. SILVERMAN
OC Field Engr J. PICKRELL
Qual Control W. MCLERRAN
Qual Engr
A-E
Subcontractor FENIX&SCISSO
Other

IDF 47001
(Rev 08-88)

U.S. DEPARTMENT OF ENERGY
IDAHO OPERATIONS OFFICE

CONSTRUCTION INTERFACE DOCUMENT

ICWA Number: ~~[illegible]~~

CID Number: 10 3a

To Be Completed By Originator

Subcontractor Field Problem No. 2 | Date 10-6-89

Addressee: R. T. Burns | Project Title/No.: Injection Well 11 Abandonment | Subcontract No.: 5-399655

Originator/Company: Fenix & Scisson | References: Drawings/Specifications: N/A

Subject: Additional Perforations

Problem/Deficiency: ☐ CLARIFICATION ☒ CHANGE

In areas where only one shot/foot is scheduled for perforating, in order to rotate the direction of perforating, the shots should be rotated.

Recommended Solution: COST ☐ yes ☒ no SCHEDULE ☐ yes ☒ no

Fenix & Scisson proposes to add one additional shot/foot to 2 shots/foot with 180° phasing & 90° rotation/foot

To Be Completed By Architect-Engineer/Project Manager/Construction Engineer

Solution: Inspection Requirements: N/A ECR No. 1

Solution Acceptable as recommended.

Prenegotiated at zero cost/zero time

10/6/89

Vendor Data Required: ☐ yes ☐ no

*Architect-Engineer/Date | Project Manager/Date: [signature] | Construction Engineer/Date: R. T. Burns | Pre-neg. By/Date: 10/6/89

*Project Manager to determine requirement for AE review/signature approval.

To Be Completed By Subcontract Administrator/Construction Engineer

Disposition:

☐ Clarification - If you consider that the information contained herein does involve a change in price or project completion, immediately notify the Subcontract Administrator. Do not proceed with work until the price or project completion change has been approved by the Subcontract Administrator

☒ Change Order No. 8 Pursuant to the Changes Article (GP-59 E), the Subcontractor is hereby directed to proceed as follow.

☐ Other _____ Pursuant to Article _____

THE SUBCONTRACT WORK SCOPE SHALL BE PERFORMED IN ACCORDANCE WITH THE ABOVE, WHICH HAS BEEN PRENEGOTIATED AT NO ADDITIONAL COST AND NO CHANGE IN THE SUBCONTRACT PERFORMANCE PERIOD.

Construction Engineer/Date

Per [signature] 10/6/89
Subcontract Administrator/Date

[signature] Jack Simmons for R T Burns 10-6-89
Subcontractor Representative/Date

DIST Signatories, pls CC Control Mgr: G. STAVERMAN
DOE Project Mgr: J. PICKRELL
OC Field Engr: W. MCLERRAN
Qual Control:
Qual Engr:
A-E:
Subcontractor: FENIX&SCISSO
Other:

IDF 4700 1
(Rev 08-88)

U.S. DEPARTMENT OF ENERGY
IDAHO OPERATIONS OFFICE

CONSTRUCTION INTERFACE DOCUMENT

To Be Completed By Originator

CWA Number	CID Number 11 1
Subcontractor Field Problem No.	Date 10/10/89
Addressee Randy Burns	Project Title/No. Injection Well Abandonment / Subcontract No. S-289039
Originator/Company Fenix & Scisson	References: Drawings/Specifications N/A
Subject Perforating Intervals	

Problem/Deficiency: ☐ CLARIFICATION ☒ CHANGE

After working with the Injection Well, we recommend the following Change in Perforating Intervals to better protect Sealing the Injection Well.

Recommended Solution: COST ☐ yes ☒ no SCHEDULE ☒ yes ☐ no

Perforate & Grout the following intervals

1. 390 - 360'	30'		6. 220 - 180'	40'
2. 360 - 320'	40'		7. 180 - 140'	40'
3. 320 - 290'	30		8. 140 - 100'	40'
4. 290 - 260'	30'		9. 100 - 60'	40'
5. 260' 220'	40'		10. 60' - 27'	33'

To Be Completed By Architect-Engineer/ Project Manager/ Construction Engineer

Solution: Inspection Requirements: per spec ECR No 1

This change is acceptable. Perforation length conform to expected soil makeup. If problems should occur with 40 ft. lengths, return to 30 ft. lengths will be required.

Vendor Data Required: ☐ yes ☐ no

N/A	[signature]	[signature]	N/A
*Architect-Engineer/Date	Project Manager/Date	Construction Engineer/Date	Pre-neg. By/Date

*Project Manager to determine requirement for AE review/signature approval. 10/10/89

To Be Completed By Subcontract Administrator/Construction Engineer

Disposition:

☐ Clarification - If you consider that the information contained herein does involve a change in price or project completion, immediately notify the Subcontract Administrator. Do not proceed with work until the price or project completion change has been approved by the Subcontract Administrator.

☒ Change Order No. 9 Pursuant to the Changes Article (GP-59 E), the Subcontractor is hereby directed to proceed as follow

☐ Other _____ Pursuant to Article _____

SUBCONTRACT WORK SCOPE SHALL BE PERFORMED IN ACCORDANCE WITH THE ABOVE.

[signature] 10/13/89
Construction Engineer/Date

[signature] 10/13/89
Subcontract Administrator/Date

[signature]
Subcontractor Representative/Date

DIST Signatories, plus CM Computer Operators
DOE Project Mgr S. SILVERMAN
DOE Field Engr J. RICKBELL
Qual Control M. MCLERRAN
Qual Engr D. MARTIN
A E
Subcontractor FENIX & SCISS
Other

IDF 47001
(Rev 08-88)

U.S. DEPARTMENT OF ENERGY
IDAHO OPERATIONS OFFICE

CONSTRUCTION INTERFACE DOCUMENT

IDWA Number

CID Number 10 5

Subcontractor Field Problem No.

Date 10-11-89

Addressee R. Burns

Project Title/No. Injection Well Abandonment

Subcontract No. 5-289039

Originator/Company Fenix & Scisson

References: Drawings/Specifications N/A

Subject Changed Well Conditions -

To Be Completed By Originator

Problem/Deficiency ☐ CLARIFICATION ☒ CHANGE

After obtaining an effective seal from 396 feet to 475 feet, because of open communications to surface through the well bore, No resistance was encountered in placing the grout in the interval from 396 feet up to 360 feet. This allowed the grout to enter the annulus and grout from 396 feet to 140 feet.

Recommended Solution: COST ☐ yes ☒ no SCHEDULE ☒ yes ☐ no This is the ideal method for sealing the well bore. It is recommended that 2 perforations be made in the casing strings at 130 feet from surface, a pressure test made to determine the seal in the annulus and then a 20 foot interval be perforated & grouted. 6.3 days of reduced time.

To Be Completed By Architect-Engineer/ Project Manager/ Construction Engineer

Solution: Inspection Requirements: per spec ECR No. /

This is acceptable. Tests must be run as discussed in meeting with MK-FEC WINCO (phone conversation) DOE-ID and Idaho Dept. Water Resource. (Test stated above)

Vendor Data Required: ☐ yes ☐ no

N/A — *Architect-Engineer/Date

Project Manager/Date 10/12/89

Construction Engineer/Date 10/11/89

N/A — Pre-neg. By/Date

*Project Manager to determine requirement for AE review/signature approval.

To Be Completed By Administrator/Construction Engineer

Disposition:

☐ Clarification - If you consider that the information contained herein does involve a change in price or project completion, immediately notify the Subcontract Administrator. Do not proceed with work until the price or project completion change has been approved by the Subcontract Administrator.

☒ Change Order No. 10 Pursuant to the Changes Article (GP 59 E), the Subcontractor is hereby directed to proceed as follow

☐ Other _____ Pursuant to Article _____

SUBCONTRACT WORK SCOPE SHALL BE PERFORMED IN ACCORDANCE WITH THE ABOVE.

Subcc

Jack Simmons 10/13/89
Construction Engineer/Date

10/13/89
Subcontract Administrator/Date

Subcontractor Representative/Date

CIST Signatories plus CM Computer Operators
DOE Project Mgr S. STIVERMAN
QC Field Engr J. PICKRELL
Qual Control W. MCLERRAN
Qual Engr DAVE MARTIN
A.E.
Subcontractor FENIX & SCISSON
Other

IDF 4700 1
(Rev 06 88)

U.S. DEPARTMENT OF ENERGY
IDAHO OPERATIONS OFFICE

CONSTRUCTION INTERFACE DOCUMENT

To Be Completed By Originator

CID Number 13 5

Subcontractor Field Problem No.

Date 10-12-89

Addressee R. Burns

Project Title/No. Injection Well Abandonment

Subcontract No. S-289039

Originator/Company Fenix & Scisson

References: Drawings/Specifications N/A

Subject Change in Shot density from 140 foot to 27 foot from Surface

Problem/Deficiency: ☐ CLARIFICATION ☒ CHANGE

Valuable Seismic data was lost with the wellbore & annulus being sealed from 396 feet to 140 feet from Surface.

Recommended Solution: COST ☐ yes ☒ no SCHEDULE ☐ yes ☒ no

It is recommended that only 2 shots per foot be utilized instead of the scheduled 4 shots per foot. This will reduce the seismic effect close to building 666 in CCP. Two shots per foot for perforating and grouting are more than adequate to effectively seal the well bore.

To Be Completed By Architect-Engineer/ Project Manager/ Construction Engineer

Solution: Inspection Requirements per spec ECR No 1

This is acceptable. If problems occur during grouting additional perforations will be made during the follow on shots. Also if problems with only 2 shots per foot are noted during the water recirculation test, additional perforations will be made

Vendor Data Required: ☐ yes ☐ no

N/A — *Architect-Engineer/Date

Project Manager/Date 10/12/89

Construction Engineer/Date

N/A — Pre-neg. By/Date

*Project Manager to determine requirement for AE review/signature approval. 10-12-89

To Be Completed By Subcontract Administrator/Construction Engineer

Disposition:

☐ Clarification - If you consider that the information contained herein does involve a change in price or project completion, immediately notify the Subcontract Administrator. Do not proceed with work until the price or project completion change has been approved by the Subcontract Administrator

☒ Change Order No. 11 Pursuant to the Changes Article (GP 59 E), the Subcontractor is hereby directed to proceed as follow

☐ Other _____ Pursuant to Article _____

SUBCONTRACT WORK SCOPE SHALL BE PERFORMED IN ACCORDANCE WITH THE ABOVE.

Jack Simmons 10/13/89
Construction Engineer/Date

10/13/89
Subcontract Administrator/Date

Subcontractor Representative/Date

DIST Signatories, plus CM Computer Operators
DOE Project Mgr S. SILVERMAN
OC Field Engr J. PICKRELL
Qual Control W. RICHERSON
Qual Engr D. MARTIN
A-E
Subcontractor FENIX & SCISSO
Other

IDF 4700 1
(Rev 08-88)

U.S. DEPARTMENT OF ENERGY
IDAHO OPERATIONS OFFICE

CONSTRUCTION INTERFACE DOCUMENT

NA Number	CID Number 14 3w
Subcontractor Field Problem No.	Date 10-12-1989
Addressee R. Burns	Project Title/No. Injection Well Abandonment / Subcontract No. S-289039
Originator/Company Fenix & Scisson	References: Drawings/Specifications N/A
Subject Change in length of perforating intervals.	

To Be Completed By Originator

Problem/Deficiency: ☐ CLARIFICATION ☒ CHANGE With the vault being invaded with the grout slurry, it is recomended that a change in the interval length be changed to allow for the least amount of invasion from the clean water pressure test and the grouting sequence from continued testing and grouting.

Recommended Solution: COST ☐ yes ☒ no SCHEDULE ☒ yes ☐ no Change of 1 day less on Schedule. It is recommend that the interval from 110 feet to 27 feet from surface be perforated and pressure tested to determine the amount of fluid intrusion into the vault. If tests indicate satisfactory results can be obtained, perforate & test in 10 foot intervals with 2 shots/foot and then grout the entire section.

To Be Completed By Architect-Engineer/ Project Manager/ Construction Engineer

Solution: Inspection Requirements per spec ECR No 1

Perforation of 40 ft can be made then a recir. test must be run. If successful, perforations in 10 ft intervals can be made. A recirc. test run after each 10 ft. interval. If successful after each test can proceed to the 27 ft elev

Vendor Data Required: ☐ yes ☐ no

N/A	10/13/89		N/A
*Architect-Engineer/Date	Project Manager/Date	Construction Engineer/Date	Pre-neg. By/Date

*Project Manager to determine requirement for AE review/signature approval. 10/13/89

To Be Completed By Administrator/Construction Engineer

Disposition:

☐ Clarification - If you consider that the information contained herein does involve a change in price or project completion immediately notify the Subcontract Administrator. Do not proceed with work until the price or project completion change has been approved by the Subcontract Administrator

☒ Change Order No. 12 Pursuant to the Changes Article (GP 59 E), the Subcontractor is hereby directed to proceed as follow

☐ Other _____ Pursuant to Article _____

SUBCONTRACT WORK SCOPE SHALL BE PERFORMED IN ACCORDANCE WITH THE ABOVE.

Subcon:

Jack Simmons 10/13/89
Construction Engineer/Date

10/13/89
Subcontract Administrator/Date

Subcontractor Representative/Date

DIST Signatories plus CM Computer Operators
DOE Project Mgr S. SILVERMAN
OC Field Engr J. BIRCHELL
Qual Control W. MCLERRAN
Qual Engr D. MARTIN
A-E
Subcontractor FENIX & SCISS
Other

APPENDIX B

FENIX & SCISSON
A Division of PB-KBB Inc.

MK-FERGUSON OF IDAHO CO.
INJECTION WELL ABANDONMENT

SUB CONTRACT NO. S-289039
PROJECT NO. 568

JOB LOG

REPORT FOR: 10 / 2 / 89

NUMBER: 1

TIME		DESCRIPTION OF OPERATION
START	STOP	
0700	1630	Standby 8 Hours. Waiting on State Permit

SERVICES/MATERIALS USED

B.J. Titan	8 Hrs	Standby	Personnel	& Equipment
French Well Services	"	"	"	"
Vibra Tech	"	"	"	"

Prepared By: D. Kennedy
Fenix & Scisson

Date: 10/2/89

10/3/89

Accepted By: Jack Simons
MK-Ferguson of Idaho Co.

Date: 10-3-89

FENIX & SCISSON
A Division of PB-KBB Inc.

MK-FERGUSON OF IDAHO CO.
INJECTION WELL ABANDONMENT

SUB CONTRACT NO. S-289039
PROJECT NO. 568

JOB LOG

REPORT FOR: 10 / 3 / 89

NUMBER: 2

TIME		DESCRIPTION OF OPERATION
START	STOP	
0700	1630	8 Hrs Standby - Waiting on State Permit

SERVICES/MATERIALS USED

B.J. Titan	8 Hours Standby Personnel & Equipment
French Well Services	" " " " "
Vibra Tech	" " " " "

Prepared By: D E Kennedy
Fenix & Scisson
G Myers 10/4/89

Date: 10/3/89

Accepted By: Jack Simmons
MK-Ferguson of Idaho Co.

Date: 10-4-89

FENIX & SCISSON
A Division of PB-KBB Inc.

MK-FERGUSON OF IDAHO CO.
INJECTION WELL ABANDONMENT

SUB CONTRACT NO. S-289039
PROJECT NO. 568

JOB LOG

REPORT FOR: 10 / 4 / 89

NUMBER: 3

TIME		DESCRIPTION OF OPERATION
START	STOP	
0700	1630	8 Hours Standby Waiting on State Permit

SERVICES/MATERIALS USED

B.J. Titan	8	Hours	Standby	Personnel	&	Equipment
French Well Services	"	"	"	"	"	"
Vibra Tech	"	"	"	"	"	"

Prepared By: D E Kennedy
Fenix & Scisson

Date: 10/4/89

Accepted By: Jack Simonds 10/5/89
MK-Ferguson of Idaho Co.

Date: 10-5-89

FENIX & SCISSON
A Division of PB-KBB Inc.

MK-FERGUSON OF IDAHO CO.
INJECTION WELL ABANDONMENT

SUB CONTRACT NO. S-289039
PROJECT NO. 568

JOB LOG

REPORT FOR: 10/05/89 NUMBER: 4

Weather: Clear & Cool-

TIME START	TIME STOP	DESCRIPTION OF OPERATION
0630	0700	Arrive on Site:
0700	0730	POD meeting
0730	0800	Bring Explosives on location & SETTING ~~STEEMOMETER~~ SEISOMETERS AS REQD.
0900		PICK UP 1ST 10 PERF. GUN & ZERO AT GROUND LEVEL. WENT IN HOLE WITH
		GUN AND TAG FILL AT 475'. PERF 475' TO 465'-10' WITH 4 SHOTS PER
		FOOT. PULL OUT OF HOLE WHILE H-P PERSONNEL MONITOR WIRE LINE
	1015	& GUN (NO CONTAMINATION) ALL SHOTS FIRED (40 SHOTS) LAY DOWN GUN
1015		PICK UP 2ND GUN-10' AND RAN IN HOLE. PERF. 465' TO 455'
		PULL OUT OF HOLE WITH SAME RESULTS AS 1ST GUN (40 SHOTS
	1030	TOTAL 80 SHOTS FIRED)

SERVICES/MATERIALS USED

37' Prima Cord.

B.J. Titan 300 SX CLASS "G" WITH 2% CALCIUM CHLORIDE MIXED TO 15.6 LB/GAL.

French Well Services 100-34 GM. SHAPED CHARGES - 3-10' EXPENDABLE GUNS

Vibra Tech 3- SEISOMETERS

Prepared By: [signature] J. Marr Date: 10/5/89

Fenix & Scisson [signature] WINCU 10/5/89

Accepted By: Jack Simonds Date: 10-5-89

MK-Ferguson of Idaho Co.

JOB LOG

REPORT FOR: 10-5-89 NUMBER: 4

TIME START	TIME STOP	DESCRIPTION OF OPERATION
1030		PICK UP 3RD GUN AND WENT IN HOLE. PERF. 455' TO 450' (5'
		AT 4 SHOTS PER FOOT - 20 SHOTS - TOTAL 100 SHOTS) PULL
	1115	OUT OF HOLE WITH GUN AND LAY DOWN SAME.
1115	1120	RIG DOWN FRENCH WELL SERVICE
1120	~~[illegible]~~	RIG UP W.S.G.S. DOWN HOLE TV SURVEY EQUIPMENT.
		RAN T.V. SURVEY OF 10 3/4" DRISCO CASING DOWN TO 469' -
		FLUID LEVEL. FLUID TOO CLOUDY TO RECORD DEEPER, PULL
	1250	OUT OF HOLE AND RIG DOWN T.V. SURVEY EQUIPMENT.
1250		RIG UP B. J. AND PUMP 63 BARRELS FIRE WATER INTO HOLE.
	1315	HOLE STANDING FULL OF WATER.
1315		MIX AND PUMP INTO HOLE 300 SX. CLASS "G" CMT. AT 15.6 LB/GAL
	1405	+ 2% CALCIUM CHLORIDE
1405	1415	CEMENT ENTERING PERFORATION.
1415		DISPLACE CEMENT INTO FORMATION WITH 33 BARRELS
	1430	FIRE WATER
1430	1435	SHUT IN PRESSURE = 0 PSI WAITING ON CEMENT
1435	1530	CLEAN UP PUMP TRUCK, LOCATION AND REFILL
		BULK CEMENT TRUCK. ALL PERSONNEL LEAVE CPP SITE
Note:		Loaded 3 - 10 foot expendable guns For Shoot
		on 10/6/89. Used 120 - 34 gram ~~[illegible]~~ Charges, 3
		expendable guns, and 45 foot of prime Cord.
Note:		See attached for Seismic report.

FENIX & SCISSON
A Division of PB-KBB Inc.

MK-FERGUSON OF IDAHO CO.
INJECTION WELL ABANDONMENT

SUB CONTRACT NO. S-289039
PROJECT NO. 568

JOB LOG

REPORT FOR: 10 / 6 / 89

NUMBER: 5

TIME START	TIME STOP	DESCRIPTION OF OPERATION
0630	0700	ARIVE INEL SITE AND CLEARED INTO CPP UNIT
0700	0730	POD MEETING; SAFETY MEETING AT MAGAZINE
0730	0745	MOVE PERFORATION GUNS ONTO CPP SITE
0745		MAKE UP SINKER BAR, RUN IN HOLE, TAG
		1ST CMT. PLUG AT 452' (2' BELOW LAST TOP
	0810	SHOT ON 10-5-89)
0810	~~0~~	PICK UP 1ST 10' GUN (4 SHOTS PER FOOT) AND
	0830	RUN IN HOLE TO PERFORATE
0830		PERFORATE 450' TO 440' WITH 4 SHOTS PER
		FOOT AND PULL OUT OF HOLE. ALL SHOTS FIRED. 40
	0855	TOTAL SHOTS.

SERVICES/MATERIALS USED

B.J. Titan 160 SX. CLASS "G" CMT. + 2% CALCIUM CHLORIDE (3 SX)
French Well Services 180-39 GM SHAPED CHARGES; 45' PRIMER CORD
Vibra Tech 3-PORTABLE SIESOMETERS

Prepared By: J. J. Marr / [illegible] Date: 10/6/89
Fenix & Scisson

[illegible] 10/10/89

Accepted By: Jack [illegible] Date: 10/10/89
MK-Ferguson of Idaho Co.

JOB LOG

REPORT FOR: 10-6-89 NUMBER: 5

TIME START	TIME STOP	DESCRIPTION OF OPERATION
0855		PUCK UP 2ND - 10' PERFORATING GUN AND RUN
	0900	IN HOLE TO PERFORATE CASING
0900		PERFORATE 440' TO 430' WITH 4 SHOTS PER FOOT
		(~~TOTAL~~ 40 SHOTS; 80 SHOTS TOTAL) PULL OUT
	0905	OF HOLE WITH SPENT GUN. ALL SHOTS FIRED
0905		MAKE UP 3RD PERFORATING GUN - 10' AND RAN
	0915	IN HOLE TO PERFORATE
0915		PERFORATE 430' TO 420' WITH 4 SHOTS PER FOOT;
	0920	40 SHOTS; TOTAL 120 SHOTS. ALL SHOTS FIRED
0920		PULL OUT OF HOLE AND LAY DOWN GUN. RIG
	0930	DOWN FRENCH WELL SERVICE
0930		RIG UP B.J. TO PUMP INTO WELL
	~~1~~	TEST FORMATION WITH 60 BARRELS FIRE WATER
	1000	PUMP IN RATE AT 4 BPM AND 200 PSI
1000		MIX AND PUMP 160 SX CLASS "G" ~~CMT~~ WITH
		2% CALCIUM CHLORIDE AT 15.6 LB./GAL.
		DISPLACED IN 10 3/4" DRISCO CASING WITH
		30.5 BARRELS OF FIRE WATER. DISPLACEMENT
	1045	PRESSURE 200 PSI AT 2.5 BPM.
1045	~~1045~~	CEMENT IN PLACE. INSTANT SHUT IN
	1045	PRESSURE 100 PSI
1045	~~1145~~	RIG DOWN PUMP TRUCK, CLEAN UP LOCATION
		AND EQUIPMENT AND REFILLED BULK
	1145	CEMENT TRUCK, AREA SECURE AT 1145
		NOTE:
		(1) RELEASED WELL PRESSURE AT 1115 - BACK
		FLOW 5 GAL WATER
		(2) RELEASED PRESSURE AT 1145 - BACK FLOW
		3 GAL WATER
		(3) SHUT WELL IN FOR WEEK END.

JOB LOG

REPORT FOR: S-289C39 NUMBER: 6

TIME START	TIME STOP	DESCRIPTION OF OPERATION
0905		ATTEMPET TO FIRE 2ND GUN AND MIS-FIRE OCCURRED.
	0935	WAIT 30 MINUTES AS REQUIRED
0935		PULL MIS FIRE UP TO 27' BELOW GRADE AND WAIT
	1130	ON ORDERS
1130		RECIEVED ORDERS TO REMOVE GUN, DISASSEMBLE AND
		DETERMINE CAUSE OF MIS FIRE. MIS FIRE CAUSED
	1155	BY FAULTY RESISTOR ON CAP. REPLACED CAP
1155		RAN HOLE WITH 2ND GUN TO PERFORATE 440' TO 400'
	1210	WITH 4 SPF
1210		RIG UP B.J. TO PUMP FIRE WATER INTO HOLE TO KEEP FULL
	1220	IF POSSIBLE WHILE PERFORATING.
1220	1222	PERFORATE 440' TO 400' WITH 40 JET SHOTS (80 SHOTS TOTAL)
1220		PULL OUT OF HOLE AND PICK UP 3RD GUN LOADED AS
	1300	THE FOLLOWING - 5' AT 4 SPF AND 5' AT 2 SPF
1300	1315	TRIP IN HOLE WITH 3RD GUN TO PERFORATE 400' TO 390'
1315		PERFORATE 400' TO 390' WITH 30 JETS SHOTS (TOTAL 110 SHOTS)
	1320	WHILE PUMPING FIRE WATER INTO CASING. ALL SHOTS FIRED
1320		PULL OUT OF HOLE AND LAY DOWN GUN. RIG DOWN
	1340	FRENCH WELL SERVICE AND RIG UP B.J. TO PUMP GROUT
1340	1400	INJECT FIRE WATER INTO WELL TO ESTABLISH RATE - TOTAL 60 BBLS.
1400		MIX AND PUMP 300 SX. CLASS "G" CEMENT + 2% CALCIUM
	1417	CHLORIDE (13 YDS³) MIXED AT 15.6 LB/GAL
1417		DISPLACED CEMENT OUT PERFORATIONS 420' TO 390' WITH 28
	1430	BARRELS FIRE WATER. INSTANT SHUT IN PRESSURE - 0 PSI
1430	1515	RIG DOWN B.J. AND CLEAN UP LOCATION AND EQUIPMENT
1515		BLEED WELL PRESSURE - REQUIRED 3 GAL FIRE
	1530	WATER - WELL DEAD
1530		CLEAR PERSONNEL FROM STP SITE.

FENIX & SCISSON
A Division of PB-KBB Inc.

MK-FERGUSON OF IDAHO CO.
INJECTION WELL ABANDONMENT
WEATHER: CLEAR WITH BREEZE

SUB CONTRACT NO. S-289039
PROJECT NO. 568

JOB LOG

REPORT FOR: 10 / 10 / 89

NUMBER: 7

TIME START	TIME STOP	DESCRIPTION OF OPERATION
0645	0700	ARRIVE INEL SITE AND CLEAR CPP SECURITY
0700	~~0730~~	LOAD PERFORATING GUNS AND MOVE TO WELL SITE
	0730	MAKE SINKER RUN & TAG CEMENT PLUG AT 390'
0730		ARM 1ST GUN (10' LOADED 2 SPF) AND RUN IN HOLE
	0820	TO PERFORATE
0820	0840	WAIT ON SITE H-P
0840	0900	PERFORATE 390' TO 380' WITH 2 SPF AND PULL OUT OF HOLE
0900	0905	PICKUP AND GO IN HOLE WITH 2ND GUN (10' x 2 SPF)
0905		PERFORATE 380' TO 370' WITH 20 SHOTS (2 SPF) AND
	0910	PULL OUT AND LAY DOWN SPENT GUN.

SERVICES/MATERIALS USED

B.J. Titan 300 SX. CLASS "G" CEMENT + 2% CALCIUM CHLORIDE (13 YDS³)
French Well Services 80-34 GM SHAPED CHARGES & 60' PRIMER CHORD
Vibra Tech 3-PORTABLE SEISMOMETERS

Prepared By: J.J. Mall / D.E. Kennedy Date: 10/10/89
Fenix & Scisson

B. Myers WINCO 10/10/89

Accepted By: Jack Simonds Date: 10/10/89
MK-Ferguson of Idaho Co.

JOB LOG

REPORT FOR: MK-FERGUSON NUMBER: 7

TIME START	TIME STOP	DESCRIPTION OF OPERATION
0910		PICK UP AND RUN IN WELL WITH 3RD IN PERFORATING
	0930	GUN LOADED 2 SPF.
0930		PERFORATE 370' TO 360' WITH 20 SHOTS - 2 SPF
		TOTAL PERFORATIONS 390' TO 360 AT 2 SPF - 60 TOTAL
	0940	SHOTS.
0940		PULL OUT CATHOLE AND LAY DOWN SPENT GUN.
	0945	RIG DOWN FRENCH WELL SERVICE
0945	1000	RIG UP B.J. TITAN TO PUMP CEMENT PLUG
1000		PUMP 63 BARRELS FIRE WATER INTO PERFORATION
		AT ØPSI. WELL TAKES ± 2 BPM ON VACUUM
	1030	AFTER PUMPING
1030		MIX AND PUMP 300 SX. CLASS "G" CEMENT +
		2% CALCIUM CHLORIDE AT 15.6 LB/GAL (±134 ft³)
	1050	INTO PERFORATIONS AT 390' TO 360'
1050		DISPLACE CEMENT INTO FORMATION WITH 25.5
	1100	BBL. FIRE WATER. INSTANT SHUT IN PRESSURE = 0 PSI
1100		CEMENT IN PLACE CLEAN UP EQUIPMENT,
	1230	LOCATION AND REFILL CEMENT PUMP TRUCK
1230	1250	WEEKLY SAFETY MEETING - SEE ATTACHED
		NOTES.
1250	1330	SECURE WELL FOR DAY
		NOTE:
		FOUND 5' OF WATER IN WELL CELLAR UPON
		COMPLETION OF PLUG DISPLACMENT (±57 BBL)

JOB LOG

REPORT FOR: 10/11/89 NUMBER: 7

TIME START	TIME STOP	DESCRIPTION OF OPERATION
		Note: Reviewed perforating and grouting
		procedures for 10/10/89 that placed the
		Column of cement from 396 feet to
		140 feet from surface
		Items of information:
		1. 24 inch diameter hole.
		2. Seal of well bore from 396' to
		475 feet proven by migration of
		cement upward instead of out into
		the formation or down to the
		abnormally pressured zone from
		396 feet to 475 feet from surface.
		3. Communications between the top of
		the casing strings and the bottom
		of the vault. This was determined
		by the fluid entering the vault.
		4. Seal on the riser system is
		effective. If it was not, there
		would have been no pressure on
		the riser system while pumping
		As was explained during the conference
		call to the Idaho Department of Water
		Resources, The Department of Energy,
		WINCO, MK-Ferguson of Idaho and
		with Fenix & Scisson; the changed
		conditions of the well allowed the
		grout to circulate down the 10 3/4 inch
		casing, through the perforations and
		up the annulus. After the cement capacity reached
		the amount to be pumped, it was displaced
		with water. The pressures were released
		and the cement grout reached equilibrium.

JOB LOG

REPORT FOR: 10/11/89 NUMBER: 7

TIME START	TIME STOP	DESCRIPTION OF OPERATION
		Note "Continued"
		at 140 feet from surface. The
		preferred method of plugging wells
		by squeezing with grout is normally
		done by circulating the grout behind
		the casings and the annulus of the
		casings and the well bore.
		In the case of the Injection Well, 300 sx
		of Class "G" with 2% CaCl added to accellerate
		the setting time, for a total slurry volume
		of 13 cubic yards. 4 cubic yards of grout
		remained in the 10 3/4" casing which put 9.0
		cubic yards of slurry into the annulus. If
		their is no gravel pack or casing strings
		in the annulus, the cement slurry would
		have risen 90 feet into the annulus.
		However, the annulus of the Injection
		well has 3 addional casing strings with
		in this interval plus the annular spaces
		were sand and gravel packed. Porosity
		for the current situation is as follows
		Porosity — Filled Space — Into the Wellbore Vol.
		35% Porosity — 256' — 0
		30% — 256' — 0.45 Cu yds
		25% — 256' — 0.90 Cu. yds
		20% — 256' — 1.35 Cu. yds
		15% — 256' — 1.80 cu. yds.
		The most probable case would be in
		the range of 15 to 20% porosity in
		the annulus which would put between 1.35
		to 1.80 Cu yds into the porous sections
		of the formations & zones covered.

JOB LOG

REPORT FOR: 10-11-89

NUMBER: 7

TIME		DESCRIPTION OF OPERATION
START	STOP	
		This grout would be forced into the formations
		with pressures ranging from 310 to 436 psi
		while pumping and from 60 psi to 186 psi
		in a static state. This is a good
		squeeze pressure for the depths of
		140 feet to 350 feet from surface.

FENIX & SCISSON
A Division of PB-KBB Inc.

MK-FERGUSON OF IDAHO CO.
INJECTION WELL ABANDONMENT
WEATHER: CLEAR & WINDY

SUB CONTRACT NO. S-289039
PROJECT NO. 568

JOB LOG

REPORT FOR: 10 / 11 / 89

NUMBER: 3

TIME		DESCRIPTION OF OPERATION
START	STOP	
0630	0715	CLEAR CPP SECURITY AND ARRIVE AT WELL SITE
0715		RIG UP FRENCH AND MAKE SINKER BAR RUN ... TAG
	0745	CMT. AT 180' PULL OUT OF HOLE AND RIG DOWN FRENCH
0748		RIG UP B.J. TO PUMP INTO WELL. FLUID LEVEL
		IN VAULT AT 18'6" FROM SURFACE. FILL RISER PIPE WITH
	0822	1.67 BBL FIRE WATER.
0822		PUMP INTO 10 3/4" AT ±1 BPM AT 150 PSI. PUMP TOTAL OF
		6.0 BBL FIRE WATER AND SHUT DOWN. INSTANT SHUTIN
	0828	PSI (FLUID LEVEL IN VAULT AT 18'5"-1" DROP)
0828	1600	C.I.D. MEETING. RIG DOWN B.J., CLEAN LOCATION, SECURE
		WELL.

SERVICES/MATERIALS USED

B.J. Titan — 8 Hours Standby
French Well Services Depth Charge — 6 Hours Standby
Vibra Tech 8 Hours Stand by

Prepared By: [signature] Date: 10/11/89
Fenix & Scisson
[signature] 10/11/89

Accepted By: [signature] Date: 10-11-89
MK-Ferguson of Idaho Co.

FENIX & SCISSON
A Division of PB-KBB Inc.

MK-FERGUSON OF IDAHO CO.
INJECTION WELL ABANDONMENT
WEATHER: PARTLY CLOUDY

SUB CONTRACT NO. S-289039
PROJECT NO. 568

JOB LOG

REPORT FOR: 10 / 12 / 89

NUMBER: #9

TIME START	TIME STOP	DESCRIPTION OF OPERATION
0630	0730	CLEAR TPP SECURITY & LOAD GUNS TO TRANSPORT TO WELL
0730	0800	MOVE GUNS TO WELL SITE AND UNLOAD SAME.
0800		MAKE UP SQUEEZE GUN. MEASURE FLUID LEVEL IN CASING
		AT 19' 3" FROM SURFACE. FLUID LEVEL IN 10 3/4 AT ±20'
		RAN SQUEEZE GUN TO 133' SLIGHT DRAG. WORK GUN
	0820	DOWN TO 138'. CMT. CORED. PULL UP GUN TO 130'.
0820		PERFORATE 130' TO 129 1/2' WITH 2 SHOTS AT 180° AND
	0830	PULL OUT OF HOLE AND LAY DOWN GUN. ALL SHOTS FIRED
0830		MEASURE FLUID LEVEL IN 10 3/4' AT 49 1/2' FROM
	0840	SURFACE AT 0840 HRS (±30' LOSS IN 2.25 HRS)

SERVICES/MATERIALS USED

B.J. Titan 55 sx CLASS "G" CEMENT + 2% CALCIUM CHLORIDE
French Well Services 42-34 gm. SHAPE CHARGES & 33' PRIMER CHORD
Vibra Tech 3-PORTABLE SEISMOMETERS

Prepared By: [signature] Date: 10/12/89
Fenix & Scisson
[signature] 10/13/89

Accepted By: [signature] Date: 10-13-89
MK-Ferguson of Idaho Co.
Dan Sunn IDWR 13 October 1989

JOB LOG

REPORT FOR: M/K FERGUSON NUMBER: 8

TIME START	TIME STOP	DESCRIPTION OF OPERATION
0840		PICK UP 1ST PERFORATING GUN - 10' WITH 2 SHOTS PER FOOT
	0850	AND RUN IN HOLE. WIRELINE FOUND FLUID LEVEL AT 50'
0850		PERFORATE 130 TO 120' WITH 2 SHOTS PER FOOT (20 TOTAL)
	0900	AND PULL OUT OF HOLE, LAY DOWN GUN. ALL SHOTS FIRED.
0900		PICK UP 2ND 10' PERFORATING GUN LOADED WITH 2 SHOTS
.		PER FOOT (20 TOTAL) AND RUN IN HOLE. WIRELINE
	0915	FOUND FLUID LEVEL AT 50' IN 10¾" CASING
0915		PERFORATE 120' TO 110' WITH 2 SHOTS PER FOOT. PULL
	0930	OUT OF HOLE AND RIG DOWN FRENCH.
0930	0945	RIG UP B.J. TITAN TO PUMP INTO WELL.
0945		FILL WELL WITH ± 3 BBL FRESH WATER AND PUMP INTO
		WELL AT 4 BPM AND 150 TO 200 PSI SURFACE PRESSURE
		INSTANT SHUT IN PRESSURE 0 PSI DID NOT TAKE FLUID
	1020	ON VACUUM AFTER SHUT IN. PUMP TOTAL OF 14.5 BBL.
1020		MIX AND PUMP 55 SX GLASS "G" CEMENT + 2%
	1025	CALCIUM CHLORIDE MIXED AT 15.9 LB/GAL.
1025		DISPLACE CEMENT WITH 8.25 BBL FRESH WATER CEMENT
	1032	IN PLACE
1032	1120	RIG DOWN B. J. TITAN, CLEAN UP LOCATION AND EQUIPMENT
		NOTE
		Meeting 10-12-89 after grouting from
		110 feet to 130 feet of perforations to
		a depth of 140 feet from surface.
		Those in attendance were: Dennis Dunn -
		IDWR, Rich Greene - EG&G, Bob Moses & Jackie
		Picknell - Winco, Rich Reed & Jack Simonds -
		MK of Idaho and Colin Mathison & Don Kennedy -
		F&S.
		The purpose of the meeting was to
		establish a work schedule for the remaining
		interval to be perforated and grouted.

JOB LOG

REPORT FOR: 10-12-89 NUMBER: 8

TIME START	TIME STOP	DESCRIPTION OF OPERATION
		It was agreed that a 40 foot interval should be perforated from the top of the cement plug. Pressure will be applied to the 10 3/4" casing. If adequate pressure is encountered, the remaining distance to surface will be perforated and tested in 10 foot intervals. After the remaining interval has been perforated and tested, the entire section opened will be pressure grouted.
		Perforation density will be 2 shots/foot as long as seismic parameters are maintained.
		Cement will be displaced under pressure with displacement stopping 17 feet below surface level in the riser system.

FENIX & SCISSON
A Division of PB-KBB Inc.

MK-FERGUSON OF IDAHO CO.
INJECTION WELL ABANDONMENT

SUB CONTRACT NO. S-289039
PROJECT NO. 568

JOB LOG

REPORT FOR: 10 / 13 / 89

NUMBER: 10

TIME START	TIME STOP	DESCRIPTION OF OPERATION
0700	0730	POD Meeting
0730		Rigged up wire line & run depth determination
		tool. Tagged cement at 108 feet.
		Chucked cement in cellar. Water drained
		off the cement. Ran in hole and perforated
	820	from 107 feet to 97 feet. 2 shots / foot.
0840		Ran in hole with perforating gun to
		Perforate from 97 feet to 87 feet. Rig up
		Cementer. Pump fresh water at 3 BPM into
	0850	perfs from 97' to 107 feet. Pumped at 250 psi.
		(Continued)

SERVICES/MATERIALS USED

B.J. Titan Pumped Pressure Test - Grouted with 550 sx Grout from 27' to 107'
French Well Services Made 8 perforation Runs - Perf 27' to 107' 160 Shots
Vibra Tech Monitored Seismic Effect - All Shots with in limits.

Prepared By: [signature] / [signature] Date: 10/14/89
Fenix & Scisson

[signature] WINCO 10/14/89

Accepted By: [signature] Date: 10-14-89
MK-Ferguson of Idaho Co.

JOB LOG

REPORT FOR: 10/13/89 NUMBER: 10

TIME START	TIME STOP	DESCRIPTION OF OPERATION
0850		Perforate from 97 feet to 87 feet with
		2 Shots per foot. Rigged up cementers
		and pressure tested from 87 feet to 107
	0855	feet with 250 psi @ 3 BPM.
0855		Run perforating gun to 87 feet to
		perforate from 87 feet to 77 feet, 2 shots/foot. Pressure
		test from 77 feet to 107 feet with fresh
	0920	water at 3 BPM and 250 psi.
0920		Run in hole with perforating gun and perforate
		from 77 feet to 67 feet with 2 shots/foot.
		Pressure Tested from 67 feet to 107 feet
	10:00	with fresh water at 3 BPM at 250 psi.
1000		Loaded 4 additional guns to perforate from
	1115	67 feet to 27 feet.
1115		Run in the hole and perforate from 67 feet
		to 57 feet with 2 shots per foot of 34 gram
	1137	conical shaped charges
1137		Run in hole with perforating gun loaded
		with 2 - 34 gram conical charges/foot. Run
		Pressure test with fresh water at 250 psi
	~~1155~~	pressure at 3 BPM.
~~1155~~	1155	~~Run into hole with Perforating gun & perforate from~~
1155		Perforate from 57 feet to 47 feet with
		2 - 34 grams conical charges per foot. Pressure
		test with fresh water ~~from~~ at 250 psi
	1205	at 5 BPM
1205		Run in hole with perforating gun and
		perforate from 47 feet to 37 feet with
		2 - 34 gram shots/foot. Pressure test
		formation at 4 barrels per minute of
	1229	fresh water at 250 psi.

JOB LOG

REPORT FOR: 10/13/89 NUMBER: 1C

TIME START	TIME STOP	DESCRIPTION OF OPERATION
1229		Run in the hole with perforating gun
		and perforate at 2 Shots per foot
		with 34 gram Carrier from 37 feet to
		27 feet. Pressure Test formation with
		fresh water from 27 feet to 107 feet
		Pumped 4.0 Barrels per minute at 250
	1250	PSI.
1250		Rig down logging Service. Rig up to
		grout well from surface of Vault to
		107 feet. Pump in 65 BBLS of
		fresh water. Pumping Pressure 250 PSI
		Mixed and Pumped 300 Sx of 16.0
		lb/gal Class "G" grout Containing 2% Calcium
		Chloride. Tailed in with 250 sacks
		of Class "G" Cement at 16.0 lbs/gal
		of neat grout. Pumping pressure
		250 PSI at 2 bbls/minute injection
		rate. Displaced Cement with 1 BBL of fresh Water.
		Shut well in.
		Slowed rate to put grout into the
		formations and fractures and to prevent
		the slurry from entering the Vault.
		Allowed 6 feet of grout to enter
		Vault to effectively seal the well.
	1455	Cement in Place at 1455 Hours
		Rigged down Cementers. Cleared logging
		truck, logging mast and one Cement
		Pumping truck through HP Services.

FENIX & SCISSON
A Division of PB-KBB Inc.

OCT 17 1989

MK-FERGUSON OF IDAHO CO.
INJECTION WELL ABANDONMENT

SUB CONTRACT NO. S-289039
PROJECT NO. 568

JOB LOG

REPORT FOR: 10 / 16 / 89

NUMBER: 11

TIME START	TIME STOP	DESCRIPTION OF OPERATION
0700	0730	POD Meeting
0730	0800	Checked Cement Top in 10 3/4" Casing Found Cement at 40 feet.
0800	0830	Rig up and Pump 15 Sacks of Class "G" with 2% Calcium Cloride. Cement to Surface of Riser Pipe.
	0830	
830	1000	Wait on Cement. Cement Top at 14'3" from Surface.
1000	1130	Demobilize Cementing equipment
1400	1500	Removed detonators from INEL Site.

SERVICES/MATERIALS USED

B.J. Titan 15 Sack Cement - Cemented to Surface

French Well Services None

Vibra Tech None

Prepared By: D. E. Kennedy / G. J. Marr Date: 10/16/89

Fenix & Scisson

WENCO 10/17/89

Accepted By: R. T. Sum Date: 10/17/89

MK-Ferguson of Idaho Co.

APPENDIX C

BJ-T[illegible]
P O BOX 4442 HOUSTON, TX 77210

CEMENTING LOG

STAGE NO.

Date 10-05-89 District Riverton Ticket No.
Company Fenix & Scisson Rig
Lease MAH-FE-PL-304 Well No.
County State Idaho
Location Field Inel

CASING DATA PTA ☐ Squeeze ☒
Surface ☐ Intermediate ☐ Production ☐ Liner ☐
Size 8 5/8 Type Weight 24 Collar
@ 24 ft.
10 3/4 Drisco HDPE (.922" wall thickness) 24' to 477'
Casing Depths: Top surface Bottom 477"

Drill Pipe: Size Weight Collars
Open Hole: Size T D ft. P B to ft.

CAPACITY FACTORS 8 5/8 10 3/4
Casing Bbls/Lin ft .0637 Lin ft/Bbl .0250
Open Holes Bbls/Lin ft Lin ft/Bbl
Drill Pipe Bbls/Lin ft Lin ft/Bbl
Annulus Bbls/Lin ft Lin ft/Bbl
Bbls/Lin ft Lin ft/Bbl
Perforations From ft to ft Amt

CEMENT DATA:
Spacer Type: 62.5 bbl H_2O
Amt. Sks Yield ft³/sk Density PPG

LEAD: Pump Time 1.45 hrs. Type "G" 2% A-2
Excess
Amt 300 Sks Yield 1.12 ft³/sk Density 15.6 PPG
TAIL: Pump Time hrs. Type
Excess
Amt. Sks Yield ft³/sk Density PPG
WATER: Lead 5.18 gals/sk Tail gals/sk Total 37 Bbls.

Pump Trucks Used 1861-1860
Bulk Equip 46317-8787

Float Equip: Manufacturer
Shoe Type Depth
Float Type Depth
Centralizers: Quantity Plugs Top Btm
Stage Collars
Special Equip
Disp Fluid Type H_2O Amt 33 Bbls Weight 8.34 PPG
Mud Type Weight PPG

COMPANY REPRESENTATIVE Don Kennedy CEMENTER Tony Walsh

TIME	PRESSURES PSI		FLUID PUMPED DATA			REMARKS
AM/PM	DRILL PIPE CASING	ANNULUS	TOTAL FLUID	Pumped Per Time Period	RATE Bbls/Min	
						hold safety meeting
						test lines 3700 psi
2:00	0		62.5	62.5	3-4	pump 62.5 bbl H_2O
	0		125	62.5	2.8	mix 62.5 bbl slurry
3:00	0		158	33	3-.3	disp - 33 bbl H_2O
						shut well in

BJ-TITAN SERVICES
P O BOX 4442 HOUSTON, TX 77210

CEMENTING LOG

STAGE NO.

Date 10-6-89 District Riverton Ticket No. 505275
Company Fenix + Scisson Rig
Lease MAH-FE-PL-304 Well No.
County Butte State Idaho
Location Field

CASING DATA PTA ☐ Squeeze ☒
Surface ☐ Intermediate ☐ Production ☐ Liner ☐
Size 8 5/8 Type Weight 24 Collar
@ 27
10 3/4 Drisco HDPE (.922 wall thickness) 24-477
Casing Depths Top surface Bottom 477

Drill Pipe Size Weight Collars
Open Hole Size T D ft P B to ft

CAPACITY FACTORS
Casing Bbls/Lin ft 8 5/8 .0637 Lin ft/Bbl 10 3/4 .0[illegible]
Open Holes Bbls/Lin ft Lin ft/Bbl
Drill Pipe Bbls/Lin ft Lin ft Bbl
Annulus Bbls/Lin ft Lin ft Bbl
Bbls/Lin ft Lin ft Bbl
Perforations From 420 ft to 450 ft Amt

CEMENT DATA
Spacer Type:
Amt Sks Yield ft³/sk Density PPG

LEAD Pump Time 1.45 hrs Type "G" 25% [illegible]
Excess
Amt 11.0 Sks Yield 1.17 ft³ sk Density 15.[illegible] PPG
TAIL Pump Time hrs Type
Excess
Amt Sks Yield ft³/sk Density PPG
WATER Lead 5.18 gals/sk Tail gals/sk Total 19.7 Bbls.

Pump Trucks Used 1811-1810
Bulk Equip 46317-8787

Float Equip Manufacturer
Shoe Type Depth
Float Type Depth
Centralizers Quantity Plugs Top Btm
Stage Collars
Special Equip
Disp Fluid Type H_2O Amt 30.5 Bbls Weight 8.34 PPG
Mud Type Weight PPG

COMPANY REPRESENTATIVE Don Kennedy CEMENTER Tony Walsh

TIME	PRESSURES PSI		FLUID PUMPED DATA			REMARKS
AM/PM	DRILL PIPE CASING	ANNULUS	TOTAL FLUID	Pumped Per Time Period	RATE Bbls Min	
						hold safety meet ?
						test lines - 200 psi
9:45	200		63	63	4	pump 63 bbl [illegible]
	200		91.3	33.3	3	[illegible] 33.3 bbl [illegible]
10:45	200		126.8	30.5	4.8	disp 30.5 bbl H_2O
						Shut well [illegible]

BJ-TITAN SERVICES
P.O BOX 4442 HOUSTON, TX 77210

CEMENTING LOG

STAGE NO.

Date 10-09-89 District Riverton Ticket No. 505291
Company Fenix + Scisson Rig
Lease MAH-FE-PI-304 Well No
County Butte State Idaho
Location Field

CASING DATA PTA ☐ Squeeze ☑
Surface ☐ Intermediate ☐ Production ☐ Liner ☐
Size 8 5/8 Type Weight 24 Collar
@ 27
10 3/4 Drisco HDPE (.999 wall thickness) 27-420
Casing Depths Top surface Bottom 420

Drill Pipe Size Weight Collars
Open Hole Size T D ft P B to ft

CAPACITY FACTORS
Casing Bbls/Lin ft 8 5/8 10 3/4 Lin ft/Bbl .0632 .0250
Open Holes Bbls/Lin ft Lin ft/Bbl
Drill Pipe Bbls/Lin ft Lin ft/Bbl
Annulus Bbls/Lin ft Lin ft/Bbl
Bbls/Lin ft Lin ft/Bbl
Perforations From 390 ft to 420 ft Amt

CEMENT DATA
Spacer Type: 62 bbl. H2O
Amt. Sks Yield ft³/sk Density 8.34 PPG

LEAD: Pump Time 1.45 hrs. Type 5 [illegible]
Excess
Amt. 300 Sks Yield 1.17 ft³/sk Density 15.6 PPG
TAIL: Pump Time hrs. Type
Excess
Amt. Sks Yield ft³/sk Density PPG
WATER: Lead 5.18 gals/sk Tail gals/sk Total 37 Bbls.

Pump Trucks Used 1861-1860
Bulk Equip. 46317-3987

Float Equip Manufacturer
Shoe Type Depth
Float Type Depth
Centralizers: Quantity Plugs Top Btm
Stage Collars
Special Equip.
Disp. Fluid Type H2O Amt 25 Bbls Weight 8.34 PPG
Mud Type Weight PPG

COMPANY REPRESENTATIVE Don Kennedy CEMENTER Tony Wilson

TIME AM/PM	PRESSURES PSI DRILL PIPE CASING	ANNULUS	FLUID PUMPED DATA TOTAL FLUID	Pumped Per Time Period	RATE Bbls Min	REMARKS
						paid safety meeting
						test lines - 400 psi
	300		62	62	6.2	pump 62 bbl H2O
	200		124.5	62.5	3	mix 62.5 bbl [illegible]
	200		152.5	28	4-.8	displ. 25 bbl H2O
						Shut well in

BJ-TITAN SERVICES
P O BOX 4442 HOUSTON, TX 77210

CEMENTING LOG

STAGE NO.

Date 10-10-89 District Riverton Ticket No 508292
Company Fenix + Scisson Rig
Lease MAH-FE-PL-304 Well No
County Butte State Idaho
Location Field

CASING DATA PTA ☐ Squeeze ☑
Surface ☐ Intermediate ☐ Production ☐ Liner ☐
Size 8 5/8" Type Weight 24# Collar
@ 22
10 3/4" Drisco HDPE (.977 wall thickness) 22'-
Casing Depths Top Surface Bottom 426

Drill Pipe Size Weight Collars
Open Hole Size T D ft P B to ft

CAPACITY FACTORS
Casing Bbls/Lin ft 8 5/8 Lin ft/Bbl .0637
Open Holes Bbls/Lin ft 10 3/4 Lin ft/Bbl .0250
Drill Pipe Bbls/Lin ft Lin ft Bbl
Annulus Bbls/Lin ft Lin ft Bbl
Bbls/Lin ft Lin ft Bbl
Perforations From 420 ft to 390 ft Amt

CEMENT DATA
Spacer Type: 62 bbl H2O
Amt Sks Yield ft³/sk Density 8.34 PPG

LEAD Pump Time 1:45 hrs. Type G" 2% A-7
Excess
Amt 300 Sks Yield 1.17 ft³/sk Density 15.6 PPG
TAIL Pump Time hrs. Type
Excess
Amt Sks Yield ft³/sk Density PPG
WATER Lead 5.18 gals/sk Tail gals/sk Total 27 Bbls.

Pump Trucks Used 1861-1860
Bulk Equip 46312-8787

Float Equip Manufacturer
Shoe Type Depth
Float Type Depth
Centralizers Quantity Plugs Top Btm
Stage Collars
Special Equip
Disp Fluid Type H2O Amt 25.5 Bbls Weight 8.34 PPG
Mud Type Weight PPG

COMPANY REPRESENTATIVE Don Kennedy CEMENTER Tony Walsh

TIME AM/PM	PRESSURES PSI CASING	ANNULUS	FLUID PUMPED DATA TOTAL FLUID	Pumped Per Time Period	RATE Bbls Min	REMARKS
						Held safety meeting test lines - 500 psi.
9:50	200		62	62	2	pump 62 bbl H2O
	200		124 1/2	62 1/2	2	mix 62 bbl slurry
11:00	0		150	25 1/2	4-0	displ - 25 1/2 bbl H2O
						left 5 bbl circ - well on vacuum.
						Shut well in.

BJ-TITAN SERVICES

P O BOX 4442 HOUSTON, TX 77210

CEMENTING LOG

STAGE NO.

Date 10-11-00 District Buckeye Ticket No. 505299

Company Texaco + Sohio Rig

Lease MAH-CE-PL-304 Well No.

County Pitts State Idaho

Location Field

CASING DATA PTA ☐ Squeeze ☐

Surface ☐ Intermediate ☐ Production ☐ Liner ☐

Size 8 5/8 Type Weight 24# Collar

@ 52

10 3/4 Dura 11 DPS 1.000

wall thickness) 22-140

Casing Depths. Top surface Bottom 140

Drill Pipe. Size Weight Collars

Open Hole Size TD ft PB to ft

CAPACITY FACTORS

Casing Bbls/Lin ft .0636 Lin ft/Bbl 15.72

Open Holes Bbls/Lin ft .1026 Lin ft/Bbl 9.74

Drill Pipe Bbls/Lin ft Lin ft Bbl

Annulus Bbls/Lin ft Lin ft Bbl

Bbls/Lin ft Lin ft Bbl

Perforations From ft to ft Amt

CEMENT DATA:

Spacer Type:

Amt. Sks Yield ft³/sk Density PPG

LEAD: Pump Time hrs. Type

Excess

Amt. Sks Yield ft³/sk Density PPG

TAIL: Pump Time hrs. Type

Excess

Amt. Sks Yield ft³/sk Density PPG

WATER: Lead gals/sk Tail gals/sk Total Bbls.

Pump Trucks Used 1811

Bulk Equip.

Float Equip: Manufacturer

Shoe Type Depth

Float Type Depth

Centralizers Quantity Plugs Top Btm.

Stage Collars

Special Equip

Disp Fluid Type Amt Bbls Weight PPG

Mud Type Weight PPG

COMPANY REPRESENTATIVE Don Kennedy CEMENTER Tony Sanchez

TIME AM/PM	PRESSURES PSI DRILL PIPE CASING	ANNULUS	FLUID PUMPED DATA TOTAL FLUID	Pumped Per Time Period	RATE Bbls/Min	REMARKS
						[illegible]
						[illegible]
3:00	100		1	1	1	[illegible]
						[illegible]
						[illegible]
						[illegible]
						[illegible]

BJ-TITAN SERVICES
P O BOX 4442 HOUSTON, TX 77210

CEMENTING LOG

STAGE NO.

Date 10-12-89 District Riverton Ticket No 505399
Company Fox + Schroe Rig
Lease DAH-FE-PL-304 Well No
County Butte State Idaho
Location Field

CASING DATA PTA ☐ Squeeze ☑
Surface ☐ Intermediate ☐ Production ☐ Liner ☐
Size 8 5/8 Type Weight 24# Collar
0-27'
10 3/4" Drive HDPE (.999 wall thickness) 27'-120'
Casing Depths Top Bottom

Drill Pipe Size Weight Collars
Open Hole Size T D ft P B to ft

CAPACITY FACTORS
Casing Bbls/Lin ft 8 5/8 Lin ft/Bbl .0459
~~Open Hole~~ Bbls/Lin ft 10 3/4 Lin ft/Bbl .0276
Drill Pipe Bbls/Lin ft Lin ft Bbl
Annulus Bbls/Lin ft Lin ft Bbl
Bbls/Lin ft Lin ft Bbl
Perforations From 130 ft to 110 ft Amt

CEMENT DATA
Spacer Type: 14.5 ppg H2O
Amt. Sks Yield ft³/sk Density 8.34 PPG
LEAD: Pump Time 1.45 hrs. Type 35:65 Poz Class G
Excess
Amt. 55 Sks Yield 1.141 ft³/sk Density 15.8 PPG
TAIL: Pump Time hrs. Type
Excess
Amt. Sks Yield ft³/sk Density PPG
WATER: Lead 4.96 gals/sk Tail gals/sk Total 6.5 Bbls.
Pump Trucks Used 1861-1866
Bulk Equip. 4630-8787

Float Equip Manufacturer
Shoe Type Depth
Float Type Depth
Centralizers Quantity Plugs Top Btm
Stage Collars
Special Equip
Disp Fluid Type H2O Amt 5 Bbls Weight 8.34 PPG
Mud Type Weight PPG

COMPANY REPRESENTATIVE Don Kennedy CEMENTER Tony Wilson

TIME AM PM	PRESSURES PSI CASING	ANNULUS	FLUID PUMPED DATA TOTAL FLUID	Pumped Per Time Period	RATE Bbls Min	REMARKS
						Held safety meeting test lines-300 psi
10.05	180		14½	14½	14.5	pump 14.5 ppg H2O - release - up dowell
10.26	100		25½	11	5	mix 11 bbl slurry
10.32	100		33½	8	4-1	disp. 5 bbl H2O
						shut well in

BJ-TITAN SERVICES
P O BOX 4442 HOUSTON, TX 77210

CEMENTING LOG

STAGE NO

Date 10-12-89 District Riverton Ticket No 505306
Company Fenix + Scisson Rig
Lease IDAH-FE-PL-304 Well No
County Butte State Idaho
Location Field

CASING DATA PTA ☐ Squeeze ☑
Surface ☐ Intermediate ☐ Production ☐ Liner ☐
Size 8 5/8 Type Weight 24# Collar
@ 22
10 3/4" Drisco HDPE (.922 wall thickness) 102
Casing Depths Top 0 Bottom 102

Drill Pipe Size Weight Collars
Open Hole Size T D ft P B to ft

CAPACITY FACTORS
Casing Bbls/Lin ft 8 5/8 ~~Lin ft~~ Bbl .0622
~~Open Holes~~ Bbls/Lin ft 10 3/4 ~~Lin ft~~ Bbl .0250
Drill Pipe Bbls/Lin ft Lin ft Bbl
Annulus Bbls/Lin ft Lin ft Bbl
Bbls/Lin ft Lin ft Bbl
Perforations From 102 ft to 22 ft Amt

CEMENT DATA:
Spacer Type:
Amt. Sks Yield ft³/sk Density PPG

LEAD: Pump Time 1.45 hrs. Type "G" 2% A-2
Excess
Amt 550 Sks Yield 1.141 ft³/sk Density 15.8 PPG
TAIL: Pump Time hrs. Type
Excess
Amt. Sks Yield ft³/sk Density PPG
WATER: Lead 4.96 gals/sk Tail gals/sk Total 64.9 Bbls.

Pump Trucks Used 1861-1860
Bulk Equip 46212-8282

Float Equip Manufacturer
Shoe Type Depth
Float Type Depth
Centralizers Quantity Plugs Top Btm
Stage Collars
Special Equip
Disp Fluid Type H_2O Amt 1 Bbls Weight 8.34 PPG
Mud Type Weight PPG

COMPANY REPRESENTATIVE Don Kennedy CEMENTER Tony Walsh

TIME	PRESSURES PSI		FLUID PUMPED DATA			REMARKS
AM PM	~~DRILL PIPE~~ CASING	ANNULUS	TOTAL FLUID	Pumped Per Time Period	RATE Bbls Min	
						hold safety meeting
						test lines [illegible] psi
3:00	100		112	112	2	[illegible]
4:00	100		113	1	2	[illegible]
						[illegible]

APPENDIX D

VIBRA-TECH ENGINEERS BLAST AND SEISMOGRAPHIC REPORT

BLAST DATA

Client: Fenix & Scisson

Job Location: INEL Well Perforation

Date: 10-5-89 Blast No.: 1 Time: 09:38

Exact Blast Location: In well 8' from instrument

No. of Holes: 1 Diameter: ____ in. Avg. Depth: 475 ft. Subgrade: — ft.

Spacing: — ft. Burden: — ft. Avg. Stemming: — ft.

Make & Type of Explosives:

40 - 34 gram shaped charges ____ lbs.

____ lbs.

____ lbs.

____ lbs.

____ lbs.

Total Explosives ____ lbs.

Delay Make ____

Delay Type & Nos. ____

Min. delay period ____ ms.

Max. lbs./delay period 3.0 lbs.

Blaster ____

Weather 40° F, Calm

Wind Direction & Speed —

DETAILED BLAST INFORMATION

Detail or Diagram Blast Layout: Number of rows; Number of holes in each row; Number of decks per hole; amount of stemming between powder columns; nominal delay time between decks, holes and rows. (Use reverse side if necessary.)

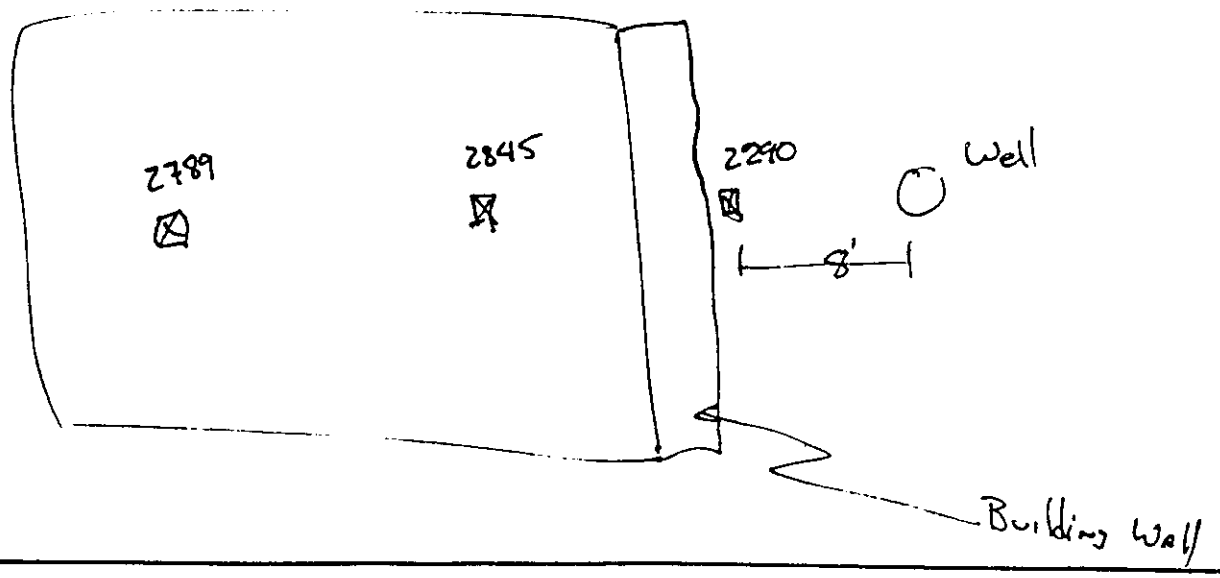

SEISMOGRAPH DATA

Seismograph No.: 2290 Range/Gain Setting: 1 ips

Everlert Only: Trigger Level ____ ips

Date of last: Shake Table Calibration: 8-31-89 Microphone Calibration: 8-31-89

Air channel low frequency limit: 2 Hertz

Exact Seismograph Location: 8' South of well head against Bldg. 666

Seismograph Distance & Direction from Blast: 8' South

Meters: Peak Overpressure 113 dB Scaled Distance ____

Peak Particle Velocity 0.15 ips Operator: Colin M. Matheson

Remarks: 40 34 gram charges instantly fired.

Vibration Analysis by: ____ Date: ____

Vibra-Tech Engineers, Inc.

VTE 103

International Printing

VIBRA-TECH ENGINEERS BLAST AND SEISMOGRAPHIC REPORT

BLAST DATA

Client: Fluor & Scisson

Job Location: INEL

Date: 10-5-89 Blast No. 1 Time 09:38

Exact Blast Location: 475'-465' downhole

No. of Holes: 1 Diameter: ____ in. Avg. Depth: — ft. Subgrade: — ft.

Spacing: — ft. Burden: — ft. Avg. Stemming: — ft.

Make & Type of Explosives:

40 34gram shaped charges ____ lbs.

____ lbs.

____ lbs.

____ lbs.

____ lbs.

Total Explosives ____ lbs.

Delay Make ____

Delay Type & Nos. ____

Min. delay period ____ ms.

Max. lbs./delay period 3.0 lbs.

Blaster ____

Weather 40° F

Wind Direction & Speed Calm

DETAILED BLAST INFORMATION

Detail or Diagram Blast Layout: Number of rows; Number of holes in each row; Number of decks per hole; amount of stemming between powder columns; nominal delay time between decks, holes and rows. (Use reverse side if necessary.)

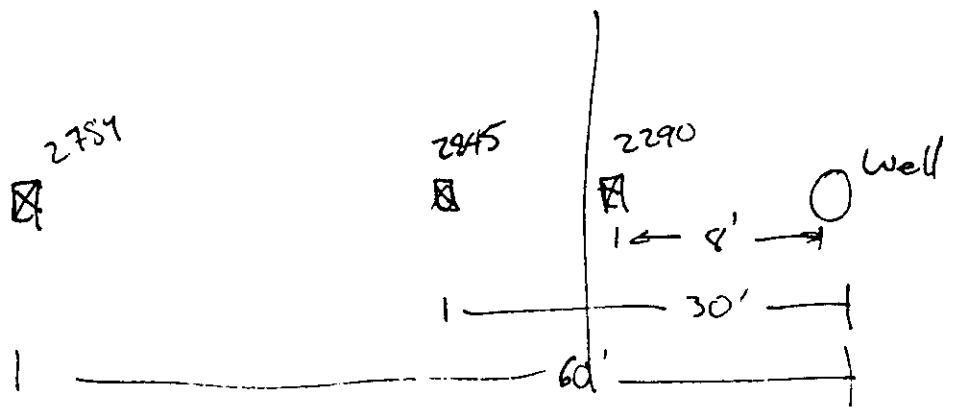

SEISMOGRAPH DATA

Seismograph No. 2845 Range/Gain Setting 1 ips

Everlert Only: Trigger Level ____ ips

Date of last: Shake Table Calibration 6-29-89 Microphone Calibration 6-29-89

Air channel low frequency limit 2 Hertz

Exact Seismograph Location: East Control Room Inside Bldg 666

Seismograph Distance & Direction from Blast 30' (indoors)

Meters: Peak Overpressure <100 dB Scaled Distance ____

Peak Particle Velocity 0.03 ips Operator Colin Matheson

Remarks: ____

Vibration Analysis by: ____ Date: ____

Vibra-Tech Engineers, Inc.

VTE 103

International Printing

VIBRA-TECH ENGINEERS BLAST AND SEISMOGRAPHIC REPORT

BLAST DATA

Client: Fenix & Scisson

Job Location: INEL

Date: 10-5-89 Blast No.: 1 Time: Ø938

Exact Blast Location: In well

No. of Holes: 1 Diameter: ____ in. Avg. Depth: 475' ft. Subgrade: — ft.

Spacing: — ft. Burden: ____ ft. Avg. Stemming: ____ ft.

Make & Type of Explosives:

40 34 gram shaped charges ____ lbs.

____ lbs.

____ lbs.

____ lbs.

____ lbs.

Total Explosives ____ lbs.

Delay Make: ____

Delay Type & Nos.: ____

Min. delay period: ____ ms.

Max. lbs./delay period: 3.0 lbs.

Blaster: ____

Weather: 40° F

Wind Direction & Speed: Calm

DETAILED BLAST INFORMATION

Detail or Diagram Blast Layout: Number of rows; Number of holes in each row; Number of decks per hole; amount of stemming between powder columns; nominal delay time between decks, holes and rows. (Use reverse side if necessary.)

SEISMOGRAPH DATA

Seismograph No.: 2789 Range/Gain Setting: 1 ips

Everlert Only — Trigger Level: ____ ips

Date of last: Shake Table Calibration: ____ Microphone Calibration: ____

Air channel low frequency limit: 2 Hertz

Exact Seismograph Location: Inside 60' from wellhead

Inside Bldg 666

Seismograph Distance & Direction from Blast: 60'

Meters: Peak Overpressure: 108 dB Scaled Distance: ____

Peak Particle Velocity: 0.03 ips Operator: Colin M. Matheson

Remarks: ____

Vibration Analysis by: ____ Date: ____

Vibra-Tech Engineers, Inc.

VTE 103

VIBRA-TECH ENGINEERS BLAST AND SEISMOGRAPHIC REPORT

BLAST DATA

Client: Fenix & Scisson

Job Location: INEL

Date: 10-5-89 Blast No.: 2 Time: 10:23

Exact Blast Location: In Well

No. of Holes: 1 Diameter: — in. Avg. Depth: 465 ft. Subgrade: — ft.

Spacing: — ft. Burden: — ft. Avg. Stemming: — ft.

Make & Type of Explosives: 40 34 gram shaped charges lbs.

Delay Make: —

Delay Type & Nos.: —

Min. delay period: — ms.

Max. lbs./delay period: 30 lbs.

Blaster:

Weather: 40°F

Wind Direction & Speed: East 10 mph

Total Explosives: lbs.

DETAILED BLAST INFORMATION

Detail or Diagram Blast Layout: Number of rows; Number of holes in each row; Number of decks per hole; amount of stemming between powder columns; nominal delay time between decks, holes and rows. (Use reverse side if necessary.)

SEISMOGRAPH DATA

Seismograph No.: 2845 Range/Gain Setting: 1 ips

Everlert Only: Trigger Level ips

Date of last: Shake Table Calibration: 6-29-89 Microphone Calibration: 6-29-89

Air channel low frequency limit: 2 Hertz

Exact Seismograph Location: East Control Room, Inside Bldg 666

Seismograph Distance & Direction from Blast: 30'

Meters: Peak Overpressure: 124 dB Scaled Distance:

Peak Particle Velocity: 0.01 ips Operator: Colin Matheson

Remarks:

Vibration Analysis by: Date:

VTE 103

Vibra-Tech Engineers, Inc.

VIBRA-TECH ENGINEERS BLAST AND SEISMOGRAPHIC REPORT

BLAST DATA

Client: Fenix & Scisson

Job Location: TNEL

Date: 10-5-89 Blast No.: 2 Time: 10:23

Exact Blast Location:

No. of Holes: — Diameter: — in. Avg. Depth: 4.5 ft. Subgrade: — ft.

Spacing: — ft. Burden: — ft. Avg. Stemming: — ft.

Make & Type of Explosives:

_____ lbs.

_____ lbs.

_____ lbs.

_____ lbs.

_____ lbs.

Total Explosives _____ lbs.

Delay Make:

Delay Type & Nos.:

Min. delay period: ms.

Max. lbs./delay period: 3.0 lbs.

Blaster:

Weather: 40°F

Wind Direction & Speed: East 10 mph

DETAILED BLAST INFORMATION

Detail or Diagram Blast Layout: Number of rows; Number of holes in each row; Number of decks per hole; amount of stemming between powder columns; nominal delay time between decks, holes and rows. (Use reverse side if necessary.)

SEISMOGRAPH DATA

Seismograph No.: 2290 Range/Gain Setting: 1 ips

Everlert Only — Trigger Level: ips

Date of last: Shake Table Calibration: 8-31-89 Microphone Calibration: 8-31-89

Air channel low frequency limit: 2 Hertz

Exact Seismograph Location: 8' South of Well Head against Bldg 666

Seismograph Distance & Direction from Blast: 8' South

Meters: Peak Overpressure: 115 dB Scaled Distance:

Peak Particle Velocity: 0.16 ips Operator: Colin Matheson

Remarks:

Vibration Analysis by: _____ Date: _____

Vibra-Tech Engineers, Inc.

VTE 103

International Printing

VIBRA-TECH ENGINEERS BLAST AND SEISMOGRAPHIC REPORT

BLAST DATA

Client: Fenix & Scisson

Job Location: INEL

Date: 10-5-89 Blast No.: 2 Time: 10:23

Exact Blast Location:

No. of Holes: Diameter: in. Avg. Depth: 465 ft. Subgrade: — ft.

Spacing: — ft. Burden: — ft. Avg. Stemming: ft.

Make & Type of Explosives:

40 34 gram shaped charges lbs.

lbs.

lbs.

lbs.

lbs.

Total Explosives lbs.

Delay Make:

Delay Type & Nos.:

Min. delay period: — ms.

Max. lbs./delay period: 3.0 lbs.

Blaster:

Weather: 40°F

Wind Direction & Speed: East 10 mph

DETAILED BLAST INFORMATION

Detail or Diagram Blast Layout: Number of rows; Number of holes in each row; Number of decks per hole; amount of stemming between powder columns; nominal delay time between decks, holes and rows. (Use reverse side if necessary.)

SEISMOGRAPH DATA

Seismograph No.: 2789 Range/Gain Setting: 1 ips

Everlert Only: Trigger Level ips

Date of last: Shake Table Calibration: Microphone Calibration:

Air channel low frequency limit: 2 Hertz

Exact Seismograph Location: 60' from shot

Inside Bldg 666

Seismograph Distance & Direction from Blast:

Meters: Peak Overpressure: 119 dB Scaled Distance:

Peak Particle Velocity: 0.01 ips Operator: Colin M. Matheson

Remarks:

Vibration Analysis by: Date:

VTE103

Vibra-Tech Engineers, Inc.

VIBRA-TECH ENGINEERS BLAST AND SEISMOGRAPHIC REPORT

BLAST DATA

Client: Fenix & Scisson

Job Location: INEL

Date: 10-5-89 Blast No. 3 Time: 11:03

Exact Blast Location:

No. of Holes: 1 Diameter: — in. Avg. Depth: 460 ft. Subgrade: — ft.

Spacing: — ft. Burden: — ft. Avg. Stemming: — ft.

Make & Type of Explosives:

20 - 34 gram shaped charges lbs.

lbs.

lbs.

lbs.

lbs.

Total Explosives lbs.

Delay Make:

Delay Type & Nos.:

Min. delay period: — ms.

Max. lbs./delay period: 1.5 lbs.

Blaster:

Weather: 45° F

Wind Direction & Speed: East 10 mph

DETAILED BLAST INFORMATION

Detail or Diagram Blast Layout: Number of rows; Number of holes in each row; Number of decks per hole; amount of stemming between powder columns; nominal delay time between decks, holes and rows. (Use reverse side if necessary.)

SEISMOGRAPH DATA

Seismograph No. 2789 Range/Gain Setting: 1 ips

Everlert Only
Trigger Level
ips

Date of last: Shake Table Calibration: Microphone Calibration:

Air channel low frequency limit: 2 Hertz

Exact Seismograph Location: Inside Bldg 666

Seismograph Distance & Direction from Blast: 60' indoors

Meters: Peak Overpressure: 110 dB Scaled Distance:

Peak Particle Velocity: .00 ips Operator: Colin Matheson

Remarks:

Vibration Analysis by: Date:

VTE 103

Vibra-Tech Engineers, Inc.

VIBRA-TECH ENGINEERS BLAST AND SEISMOGRAPHIC REPORT

BLAST DATA

Client: Fenix & Scisson

Job Location: INEL

Date: 10-5-89 Blast No. 3 Time: 11:03

Exact Blast Location: Int well

No. of Holes: 1 Diameter: ____ in. Avg. Depth: 460 ft. Subgrade: — ft.

Spacing: — ft. Burden: — ft. Avg. Stemming: — ft.

Make & Type of Explosives:

20 - 34 gram shaped charges ____ lbs.

____ lbs.

____ lbs.

____ lbs.

____ lbs.

Total Explosives ____ lbs.

Delay Make ____

Delay Type & Nos.: —

Min. delay period: — ms.

Max. lbs./delay period: 1.5 lbs.

Blaster ____

Weather: 45°F

Wind Direction & Speed: East 10mph

DETAILED BLAST INFORMATION

Detail or Diagram Blast Layout: Number of rows; Number of holes in each row; Number of decks per hole; amount of stemming between powder columns; nominal delay time between decks, holes and rows. (Use reverse side if necessary.)

SEISMOGRAPH DATA

Seismograph No.: 2845 Range/Gain Setting: 1 ips

Everlert Only — Trigger Level ____ ips

Date of last: Shake Table Calibration: 6-29-89 Microphone Calibration: 6-29-89

Air channel low frequency limit: 2 Hertz

Exact Seismograph Location: Inside Bldg. 666 30' from shot collar

Seismograph Distance & Direction from Blast: 30' inside building

Meters: Peak Overpressure: < 100 dB Scaled Distance ____

Peak Particle Velocity: .01 ips Operator: Colin Matheson

Remarks: ____

Vibration Analysis by: ____ Date: ____

VTE 103

Vibra-Tech Engineers, Inc.

International Printing

VIBRA-TECH ENGINEERS BLAST AND SEISMOGRAPHIC REPORT

BLAST DATA

Client: Fenix & Scisson

Job Location: INEL

Date: 10-5-89 Blast No. 3 Time 11:03

Exact Blast Location:

No. of Holes: 1 Diameter: — in. Avg. Depth: 460 ft. Subgrade: — ft.

Spacing: — ft. Burden: — ft. Avg. Stemming: — ft.

Make & Type of Explosives:

20 34 gram shaped charges lbs.

lbs.

lbs.

lbs.

lbs.

Total Explosives lbs.

Delay Make:

Delay Type & Nos.:

Min. delay period ms.

Max. lbs./delay period 1.5 lbs.

Blaster:

Weather: 45° F

Wind Direction & Speed: East 10mph

DETAILED BLAST INFORMATION

Detail or Diagram Blast Layout: Number of rows; Number of holes in each row; Number of decks per hole; amount of stemming between powder columns; nominal delay time between decks, holes and rows. (Use reverse side if necessary.)

SEISMOGRAPH DATA

Seismograph No. 2290 Range/Gain Setting 1 ips

Everlert Only: Trigger Level ips

Date of last: Shake Table Calibration Microphone Calibration

Air channel low frequency limit 2 Hertz

Exact Seismograph Location: Beside Bldg 666 8' South of wellhead

Seismograph Distance & Direction from Blast: South 8' from wellhead

Meters: Peak Overpressure 114 dB Scaled Distance

Peak Particle Velocity 0.11 ips Operator: Colin Matheson

Remarks:

Vibration Analysis by: Date:

Vibra-Tech Engineers, Inc.

VTE 103

International Printing

VIBRA-TECH ENGINEERS BLAST AND SEISMOGRAPHIC REPORT

BLAST DATA

Client: Fenix & Scisson

Job Location: INEL

Date: 10-6-89 Blast No.: 4 Time: 08:30

Exact Blast Location:

No. of Holes: 1 Diameter: ____ in. Avg. Depth: 450-440 ft. Subgrade: — ft.

Spacing: — ft. Burden: — ft. Avg. Stemming: — ft.

Make & Type of Explosives:

40 - 34gr. shaped charges ____ lbs.

____ lbs.

____ lbs.

____ lbs.

____ lbs.

Total Explosives ____ lbs.

Delay Make: —

Delay Type & Nos.: —

Min. delay period: — ms.

Max. lbs./delay period: 3.0 lbs.

Blaster: Alvin Williams

Weather: 40°F Lt. Overcast

Wind Direction & Speed: Calm

DETAILED BLAST INFORMATION

Detail or Diagram Blast Layout: Number of rows; Number of holes in each row; Number of decks per hole; amount of stemming between powder columns; nominal delay time between decks, holes and rows. (Use reverse side if necessary.)

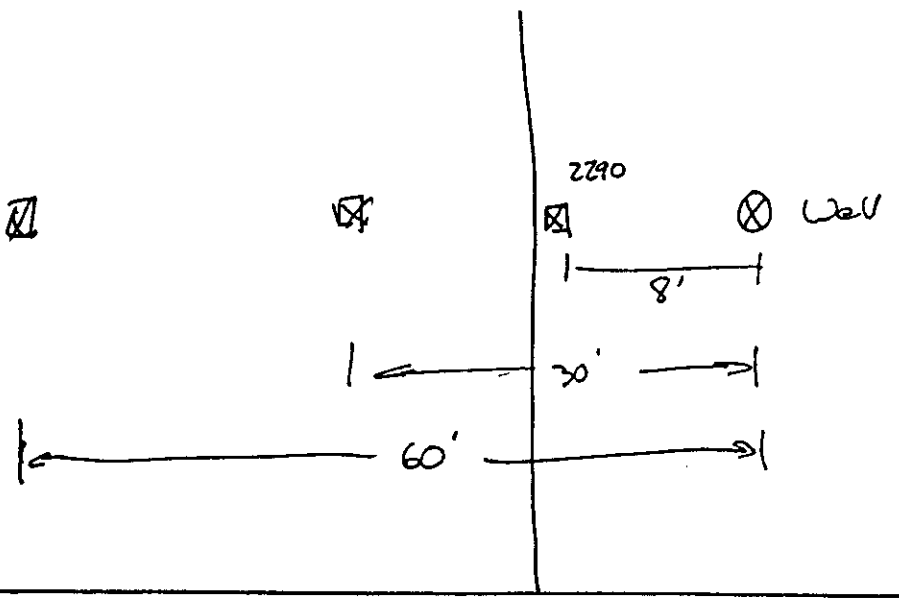

SEISMOGRAPH DATA

Seismograph No.: 2290 Range/Gain Setting: 1 ips

Everlert Only: Trigger Level ____ ips

Date of last: Shake Table Calibration ____ Microphone Calibration ____

Air channel low frequency limit: 2 Hertz

Exact Seismograph Location: 8' South of well head outside

Seismograph Distance & Direction from Blast: 8' South

Meters: Peak Overpressure 110 dB; Peak Particle Velocity 0.17 ips

Scaled Distance:

Operator: Colin Matheson

Remarks:

Vibration Analysis by: ____ Date: ____

VTE 10.

Vibra-Tech Engineers, Inc.

VIBRA-TECH ENGINEERS BLAST AND SEISMOGRAPHIC REPORT

BLAST DATA

Client: Fenix & Scisson

Job Location: INEL

Date: 10-6-89 Blast No.: 4 Time: 08:30

Exact Blast Location: Perforation of well

No. of Holes: 1 Diameter: ____ in. Avg. Depth: 450-440 ft. Subgrade: — ft.

Spacing: — ft. Burden: — ft. Avg. Stemming: — ft.

Make & Type of Explosives:

40 - 34gram shaped charges ____ lbs.

____ lbs.

____ lbs.

____ lbs.

____ lbs.

Total Explosives ____ lbs.

Delay Make ____

Delay Type & Nos. ____

Min. delay period ____ ms.

Max. lbs./delay period 3.0 lbs.

Blaster ____

Weather 40° F Lt. Overcast

Wind Direction & Speed Calm

DETAILED BLAST INFORMATION

Detail or Diagram Blast Layout: Number of rows; Number of holes in each row; Number of decks per hole; amount of stemming between powder columns; nominal delay time between decks, holes and rows. (Use reverse side if necessary.)

SEISMOGRAPH DATA

Seismograph No. 2845 Range/Gain Setting 1 ips

Everlert Only: Trigger Level ____ ips

Date of last: Shake Table Calibration ____ Microphone Calibration ____

Air channel low frequency limit 2 Hertz

Exact Seismograph Location ____

Seismograph Distance & Direction from Blast ____

Meters: Peak Overpressure NR dB Scaled Distance ____

Peak Particle Velocity NR ips Operator Colin Matheson

Remarks: Need not reset after calibration

Vibration Analysis by: ____ Date: ____

VTE 103

VIBRA-TECH ENGINEERS BLAST AND SEISMOGRAPHIC REPORT

BLAST DATA

Client: Fenix & Sassow

Job Location: INEL

Date: 10-6-89 Blast No.: 4 Time: 08:30

Exact Blast Location: In well, perforation job

No. of Holes: 1 Diameter: ____ in. Avg. Depth: 430-440 ft. Subgrade: ____ ft.

Spacing: ____ ft. Burden: ____ ft. Avg. Stemming: ____ ft.

Make & Type of Explosives: 40 - 34gm. shaped charges ____ lbs.

____ lbs.

____ lbs.

____ lbs.

____ lbs.

Total Explosives: ____ lbs.

Delay Make: ____

Delay Type & Nos.: ____

Min. delay period: ____ ms.

Max. lbs./delay period: 3.0 lbs.

Blaster: ____

Weather: 40°F PC

Wind Direction & Speed: Calm

DETAILED BLAST INFORMATION

Detail or Diagram Blast Layout: Number of rows; Number of holes in each row; Number of decks per hole; amount of stemming between powder columns; nominal delay time between decks, holes and rows. (Use reverse side if necessary.)

SEISMOGRAPH DATA

Seismograph No.: 2789 Range/Gain Setting: 1 ips

Everlert Only: Trigger Level ____ ips

Date of last: Shake Table Calibration: ____ Microphone Calibration: ____

Air channel low frequency limit: 2 Hertz

Exact Seismograph Location: Blg 666 00 level operating corridor at location D-7

Seismograph Distance & Direction from Blast: ____

Meters: Peak Overpressure: NR dB Scaled Distance: ____

Peak Particle Velocity: NR ips Operator: Colin Matheson

Remarks: Need not reset calibration before shot

Vibration Analysis by: ____ Date: ____

VTE 10

VIBRA-TECH ENGINEERS BLAST AND SEISMOGRAPHIC REPORT

BLAST DATA

Client: Ferris & Sasson

Job Location: INEL

Date: 10-6-89 Blast No.: 5 Time: _____

Exact Blast Location: _____

No. of Holes: 1 Diameter: _____ in. Avg. Depth: 440-430 ft. Subgrade: — ft.

Spacing: _____ ft. Burden: — ft. Avg. Stemming: — ft.

Make & Type of Explosives:

40 -34 gr. charges _____ lbs.

_____ lbs.

_____ lbs.

_____ lbs.

_____ lbs.

Total Explosives _____ lbs.

Delay Make: _____

Delay Type & Nos.: _____

Min. delay period: _____ ms.

Max. lbs./delay period: 3.0 lbs.

Blaster: Alvin Williams

Weather: 40°F PC

Wind Direction & Speed: Calm

DETAILED BLAST INFORMATION

Detail or Diagram Blast Layout: Number of rows; Number of holes in each row; Number of decks per hole; amount of stemming between powder columns; nominal delay time between decks, holes and rows. (Use reverse side if necessary.)

SEISMOGRAPH DATA

Seismograph No.: 2290 Range/Gain Setting: 1 ips

Everlert Only: Trigger Level _____ ips

Date of last: Shake Table Calibration _____ Microphone Calibration _____

Air channel low frequency limit: 2 Hertz

Exact Seismograph Location: 8' South of well outside

Seismograph Distance & Direction from Blast: 8' South

Meters: Peak Overpressure 108 dB; Peak Particle Velocity 0.15 ips

Scaled Distance: _____

Operator: Colin Matheson

Remarks: _____

Vibration Analysis by: _____ Date: _____

VTE 10

VIBRA-TECH ENGINEERS BLAST AND SEISMOGRAPHIC REPORT

BLAST DATA

Client: Fenix & Scisson

Job Location: INEL

Date: 10-6-89 Blast No.: 5 Time: 09:00

Exact Blast Location:

No. of Holes: 1 Diameter: ____ in. Avg. Depth: 440-430 ft. Subgrade: ____ ft.

Spacing: ____ ft. Burden: ____ ft. Avg. Stemming: ____ ft.

Make & Type of Explosives:

40 - 34 gr. shaped charges ____ lbs.

____ lbs.

____ lbs.

____ lbs.

____ lbs.

Total Explosives ____ lbs.

Delay Make:

Delay Type & Nos.:

Min. delay period: ____ ms.

Max. lbs./delay period: ____ lbs.

Blaster:

Weather: 40°F PC

Wind Direction & Speed: Calm

DETAILED BLAST INFORMATION

Detail or Diagram Blast Layout: Number of rows; Number of holes in each row; Number of decks per hole; amount of stemming between powder columns; nominal delay time between decks, holes and rows. (Use reverse side if necessary.)

SEISMOGRAPH DATA

Seismograph No.: 2845 Range/Gain Setting: 1 ips

Everlert Only: Trigger Level ____ ips

Date of last: Shake Table Calibration: ____ Microphone Calibration: ____

Air channel low frequency limit: 2 Hertz

Exact Seismograph Location: 30' from well head

Seismograph Distance & Direction from Blast:

Meters: Peak Overpressure: 108 dB Scaled Distance:

Peak Particle Velocity: .01 ips Operator: Colin Matheson

Remarks:

Vibration Analysis by: ____ Date: ____

VTE 10:

VIBRA-TECH ENGINEERS BLAST AND SEISMOGRAPHIC REPORT

BLAST DATA

Client: Ferro & Scusson

Job Location: INEL

Date: 10-6-89 Blast No.: 5 Time: 9:00

Exact Blast Location:

No. of Holes: 1 Diameter: ____ in. Avg. Depth: 440-430 ft. Subgrade: ____ ft.

Spacing: ____ ft. Burden: ____ ft. Avg. Stemming: ____ ft.

Make & Type of Explosives:

40 -34 gr. shaped charges ____ lbs.

____ lbs.

____ lbs.

____ lbs.

____ lbs.

Total Explosives ____ lbs.

Delay Make:

Delay Type & Nos.:

Min. delay period ____ ms.

Max. lbs./delay period: 3.0 lbs.

Blaster: Alvin Williams

Weather: 40° F PC

Wind Direction & Speed: Calm

DETAILED BLAST INFORMATION

Detail or Diagram Blast Layout: Number of rows; Number of holes in each row; Number of decks per hole; amount of stemming between powder columns; nominal delay time between decks, holes and rows. (Use reverse side if necessary.)

SEISMOGRAPH DATA

Seismograph No.: 2789 Range/Gain Setting: 1 ips

Everlert Only: Trigger Level ____ ips

Date of last: Shake Table Calibration ____ Microphone Calibration ____

Air channel low frequency limit: 2 Hertz

Exact Seismograph Location: Inside Bldg. 666 60' from wellhead

Seismograph Distance & Direction from Blast: 60' inside bldg 666

Meters: Peak Overpressure: 106 dB; Peak Particle Velocity: .01 ips

Scaled Distance:

Operator: Colin Mathesow

Remarks:

Vibration Analysis by: ____ Date: ____

VTE 10

VIBRA-TECH ENGINEERS BLAST AND SEISMOGRAPHIC REPORT

BLAST DATA

Client: Fenix & Scisson

Job Location: INEL

Date: 10-6-89 Blast No.: 6 Time: 09:22

Exact Blast Location:

No. of Holes: 1 Diameter: ____ in. Avg. Depth: 430-420 ft. Subgrade: ____ ft.

Spacing: ____ ft. Burden: ____ ft. Avg. Stemming: ____ ft.

Make & Type of Explosives:

40 -34 gr. shaped charges ____ lbs.

____ lbs.

____ lbs.

____ lbs.

____ lbs.

Total Explosives: ____ lbs.

Delay Make:

Delay Type & Nos.:

Min. delay period: ____ ms.

Max. lbs./delay period: 3.0 lbs.

Blaster:

Weather: 40°F PC

Wind Direction & Speed: Calm

DETAILED BLAST INFORMATION

Detail or Diagram Blast Layout: Number of rows; Number of holes in each row; Number of decks per hole; amount of stemming between powder columns; nominal delay time between decks, holes and rows. (Use reverse side if necessary.)

SEISMOGRAPH DATA

Seismograph No.: 2290 Range/Gain Setting: 1 ips

Everlert Only
Trigger Level
ips

Date of last: Shake Table Calibration: ____ Microphone Calibration: ____

Air channel low frequency limit: 2 Hertz

Exact Seismograph Location:

Seismograph Distance & Direction from Blast:

Meters: Peak Overpressure: 118 dB Scaled Distance:

Peak Particle Velocity: .15 ips Operator: Colin Matheson

Remarks:

Vibration Analysis by: ____ Date: ____

VTE 10.

VIBRA-TECH ENGINEERS BLAST AND SEISMOGRAPHIC REPORT

BLAST DATA

Client: Fenix & Scisson

Job Location: INEL

Date: 10-6-89 Blast No.: 6 Time: 09:22

Exact Blast Location:

No. of Holes: 1 Diameter: ____ in. Avg. Depth: 440-430 ft. Subgrade: ____ ft.

Spacing: ____ ft. Burden: ____ ft. Avg. Stemming: ____ ft.

Make & Type of Explosives:

40 - 34 gram charges ____ lbs.

____ lbs.

____ lbs.

____ lbs.

____ lbs.

Total Explosives ____ lbs.

Delay Make:

Delay Type & Nos.:

Min. delay period: ____ ms.

Max. lbs./delay period: 3.0 lbs.

Blaster:

Weather: 40° F PC

Wind Direction & Speed: Calm

DETAILED BLAST INFORMATION

Detail or Diagram Blast Layout: Number of rows; Number of holes in each row; Number of decks per hole; amount of stemming between powder columns; nominal delay time between decks, holes and rows. (Use reverse side if necessary.)

SEISMOGRAPH DATA

Seismograph No.: 2789 Range/Gain Setting: 1 ips

Everlert Only: Trigger Level ____ ips

Date of last: Shake Table Calibration ____ Microphone Calibration ____

Air channel low frequency limit: 2 Hertz

Exact Seismograph Location:

Seismograph Distance & Direction from Blast:

Meters: Peak Overpressure: 106 dB Scaled Distance:

Peak Particle Velocity: .01 ips Operator: Colin Matheson

Remarks:

Vibration Analysis by: ____ Date: ____

VTE 10

VIBRA-TECH ENGINEERS BLAST AND SEISMOGRAPHIC REPORT

BLAST DATA

Client: Fenix & Scisson

Job Location: INEL

Date: 10-6-89 Blast No.: 6 Time: 09:22

Exact Blast Location:

No. of Holes: 1 Diameter: ____ in. Avg. Depth: 440-430 ft. Subgrade: ____ ft.

Spacing: ____ ft. Burden: ____ ft. Avg. Stemming: ____ ft.

Make & Type of Explosives:

40 - 34gr. shaped charges ____ lbs.

____ lbs.

____ lbs.

____ lbs.

____ lbs.

Total Explosives ____ lbs.

Delay Make:

Delay Type & Nos.:

Min. delay period: ____ ms.

Max. lbs./delay period: 3.0 lbs.

Blaster:

Weather: 40°F PC

Wind Direction & Speed: Calm

DETAILED BLAST INFORMATION

Detail or Diagram Blast Layout: Number of rows; Number of holes in each row; Number of decks per hole; amount of stemming between powder columns; nominal delay time between decks, holes and rows. (Use reverse side if necessary.)

SEISMOGRAPH DATA

Seismograph No.: 2845 Range/Gain Setting: 1 ips

Everlert Only
Trigger Level
ips

Date of last: Shake Table Calibration: ____ Microphone Calibration: ____

Air channel low frequency limit: 2 Hertz

Exact Seismograph Location: Inside Blg 666

Seismograph Distance & Direction from Blast: 60'

Meters: Peak Overpressure: 111 dB Scaled Distance: ____

Peak Particle Velocity: .01 ips Operator: Colin MaHeson

Remarks:

Vibration Analysis by: ____ Date: ____

VTE 10

VIBRA-TECH ENGINEERS BLAST AND SEISMOGRAPHIC REPORT

BLAST DATA

Client: Fenix & Scisson

Job Location: INEL

Date: 10-9-89 Blast No.: 7 Time: Ø8:30

Exact Blast Location:

No. of Holes: 1 Diameter: ____ in. Avg. Depth: 420-40 ft. Subgrade: ____ ft.

Spacing: — ft. Burden: — ft. Avg. Stemming: — ft.

Make & Type of Explosives:

40 - 34gr. shaped charges ____ lbs.

____ lbs.

____ lbs.

____ lbs.

____ lbs.

Total Explosives ____ lbs.

Delay Make:

Delay Type & Nos.:

Min. delay period: ____ ms.

Max. lbs./delay period: 3.0 lbs.

Blaster: Alvin Williams

Weather: 40°F Clear

Wind Direction & Speed: Calm

DETAILED BLAST INFORMATION

Detail or Diagram Blast Layout: Number of rows; Number of holes in each row; Number of decks per hole; amount of stemming between powder columns; nominal delay time between decks, holes and rows. (Use reverse side if necessary.)

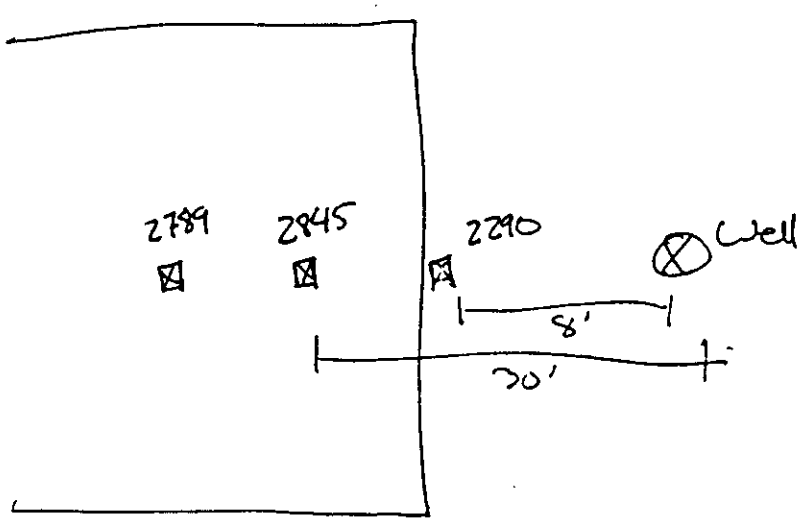

SEISMOGRAPH DATA

Seismograph No.: 2290 Range/Gain Setting: 1.0 ips

Everlert Only: Trigger Level ____ ips

Date of last: Shake Table Calibration: ____ Microphone Calibration: ____

Air channel low frequency limit: 2 Hertz

Exact Seismograph Location: 8' South of wellhead outside

Seismograph Distance & Direction from Blast: 8' South

Meters: Peak Overpressure: 108 dB Scaled Distance: ____

Peak Particle Velocity: 0.17 ips Operator: Colin Matheson

Remarks:

Vibration Analysis by: ____ Date: ____

VTE 10

VIBRA-TECH ENGINEERS BLAST AND SEISMOGRAPHIC REPORT

BLAST DATA

Client: Fenix & Scisson

Job Location: INEL

Date: _____ Blast No. 7 Time: 08:30

Exact Blast Location: _____

No. of Holes: 1 Diameter: _____ in. Avg. Depth: 420-440 ft. Subgrade: _____ ft.

Spacing: _____ ft. Burden: _____ ft. Avg. Stemming: _____ ft.

Make & Type of Explosives:

~~5~~ 40 - 34gr. shaped charges _____ lbs.

_____ lbs.

_____ lbs.

_____ lbs.

_____ lbs.

Total Explosives _____ lbs.

Delay Make: _____

Delay Type & Nos.: _____

Min. delay period: _____ ms.

Max. lbs./delay period: 3.0 lbs.

Blaster: Alvin Williams

Weather: 40°F Clear

Wind Direction & Speed: Calm

DETAILED BLAST INFORMATION

Detail or Diagram Blast Layout: Number of rows; Number of holes in each row; Number of decks per hole; amount of stemming between powder columns; nominal delay time between decks, holes and rows. (Use reverse side if necessary.)

SEISMOGRAPH DATA

Seismograph No.: 2845 Range/Gain Setting: 1.0 ips

Everlert Only
Trigger Level
ips

Date of last: Shake Table Calibration _____ Microphone Calibration _____

Air channel low frequency limit: 2 Hertz

Exact Seismograph Location: In F.A.S.T. Control Room

Seismograph Distance & Direction from Blast: 30' inside Bldg 666

Meters: Peak Overpressure 107 dB; Peak Particle Velocity 0.01 ips

Scaled Distance: _____

Operator: Colin Matheson

Remarks: _____

Vibration Analysis by: _____ Date: _____

VTE 10

VIBRA-TECH ENGINEERS BLAST AND SEISMOGRAPHIC REPORT

BLAST DATA

Client: Fenix & Sasson

Job Location: INEL

Date: 10-9-89 Blast No. 7 Time: 08:30

Exact Blast Location:

No. of Holes: 1 Diameter: ____ in. Avg. Depth: 420-410 ft. Subgrade: ____ ft.

Spacing: ____ ft. Burden: ____ ft. Avg. Stemming: ____ ft.

Make & Type of Explosives:

____ ____ lbs.

____ ____ lbs.

____ ____ lbs.

____ ____ lbs.

____ ____ lbs.

Total Explosives: ____ lbs.

Delay Make:

Delay Type & Nos.:

Min. delay period: ____ ms.

Max. lbs./delay period: ____ lbs.

Blaster: Alvin Williams

Weather: 40°F Clear

Wind Direction & Speed: Calm

DETAILED BLAST INFORMATION

Detail or Diagram Blast Layout: Number of rows; Number of holes in each row; Number of decks per hole; amount of stemming between powder columns; nominal delay time between decks, holes and rows. (Use reverse side if necessary.)

SEISMOGRAPH DATA

Seismograph No.: 2789 Range/Gain Setting: 1.0 ips

Everlert Only
Trigger Level
ips

Date of last: Shake Table Calibration: ____ Microphone Calibration: ____

Air channel low frequency limit: 2 Hertz

Exact Seismograph Location:

Seismograph Distance & Direction from Blast:

Meters: Peak Overpressure: 110 dB Scaled Distance:

Peak Particle Velocity: 0.00 ips Operator: Colin Matheson

Remarks:

Vibration Analysis by: ____ Date: ____

VTE 10

VIBRA-TECH ENGINEERS BLAST AND SEISMOGRAPHIC REPORT

BLAST DATA

Client: Fenix & Scisson

Job Location: INEL

Date: 10-9-89 Blast No.: 8 Time: _____

Exact Blast Location: _____

No. of Holes: 1 Diameter: _____ in. Avg. Depth: 40-400 ft. Subgrade: _____ ft.

Spacing: _____ ft. Burden: _____ ft. Avg. Stemming: _____ ft.

Make & Type of Explosives:

40 - 34gr. shaped charges _____ lbs.

_____ lbs.

_____ lbs.

_____ lbs.

_____ lbs.

Total Explosives _____ lbs.

Delay Make: _____

Delay Type & Nos.: _____

Min. delay period: _____ ms.

Max. lbs./delay period: 3.0 lbs.

Blaster: Alvin Williams

Weather: 40°F Clear

Wind Direction & Speed: Calm

DETAILED BLAST INFORMATION

Detail or Diagram Blast Layout: Number of rows; Number of holes in each row; Number of decks per hole; amount of stemming between powder columns; nominal delay time between decks, holes and rows. (Use reverse side if necessary.)

SEISMOGRAPH DATA

Seismograph No.: 2290 Range/Gain Setting: 1.0 ips

Everlert Only — Trigger Level: _____ ips

Date of last: Shake Table Calibration: _____ Microphone Calibration: _____

Air channel low frequency limit: 2 Hertz

Exact Seismograph Location: Beside Bldg. 666 (outside)

Seismograph Distance & Direction from Blast: 8' South

Meters: Peak Overpressure: 107 dB Scaled Distance: _____

Peak Particle Velocity: 0.11 ips Operator: Colin Matheson

Remarks: _____

Vibration Analysis by: _____ Date: _____

VTE 10

Vibra-Tech Engineers, Inc.

VIBRA-TECH ENGINEERS BLAST AND SEISMOGRAPHIC REPORT

BLAST DATA

Client: Fenix & Scisson

Job Location: INEL

Date: 10-9-89 Blast No.: 8 Time: 12:24

Exact Blast Location:

No. of Holes: 1 Diameter: ____ in. Avg. Depth: 410-400 ft. Subgrade: ____ ft.

Spacing: ____ ft. Burden: ____ ft. Avg. Stemming: ____ ft.

Make & Type of Explosives:

3 · 40 - 34gr. shaped charges ____ lbs.

____ lbs.

____ lbs.

____ lbs.

____ lbs.

Total Explosives: ____ lbs.

Delay Make:

Delay Type & Nos.:

Min. delay period: ____ ms.

Max. lbs./delay period: 3.0 lbs.

Blaster: Alvin Williams

Weather: 40°F Clear

Wind Direction & Speed: Calm

DETAILED BLAST INFORMATION

Detail or Diagram Blast Layout: Number of rows; Number of holes in each row; Number of decks per hole; amount of stemming between powder columns; nominal delay time between decks, holes and rows. (Use reverse side if necessary.)

SEISMOGRAPH DATA

Seismograph No.: 2845 Range/Gain Setting: 1.0 ips

Everlert Only
Trigger Level ips

Date of last: Shake Table Calibration: ____ Microphone Calibration: ____

Air channel low frequency limit: 2 Hertz

Exact Seismograph Location: E.A.S.T. Control Room inside Bldg 666

Seismograph Distance & Direction from Blast:

Meters { Peak Overpressure: 108 dB; Peak Particle Velocity: 0.01 ips

Scaled Distance:

Operator: Colin Matheson

Remarks:

Vibration Analysis by: ____ Date: ____

VTE 102

BLAST DATA

Client: Fenix & Scisson

Job Location: INEL

Date: 10-9-89 Blast No.: 8 Time: _____

Exact Blast Location: _____

No. of Holes: 1 Diameter: _____ in. Avg. Depth: 410-400 ft. Subgrade: _____ ft.

Spacing: _____ ft. Burden: _____ ft. Avg. Stemming: _____ ft.

Make & Type of Explosives:

40 - 34 gram shaped charges _____ lbs.

_____ lbs.

_____ lbs.

_____ lbs.

_____ lbs.

Total Explosives _____ lbs.

Delay Make: _____

Delay Type & Nos.: _____

Min. delay period: _____ ms.

Max. lbs./delay period: _____ lbs.

Blaster: _____

Weather: _____

Wind Direction & Speed: _____

DETAILED BLAST INFORMATION

Detail or Diagram Blast Layout: Number of rows; Number of holes in each row; Number of decks per hole; amount of stemming between powder columns; nominal delay time between decks, holes and rows. (Use reverse side if necessary.)

SEISMOGRAPH DATA

Seismograph No.: 2789 Range/Gain Setting: 1.0 ips

Everlert Only: Trigger Level _____ ips

Date of last: Shake Table Calibration: _____ Microphone Calibration: _____

Air channel low frequency limit: 2 Hertz

Exact Seismograph Location: Access corridor of level -33 in Bldg. 666

Seismograph Distance & Direction from Blast: _____

Meters: Peak Overpressure: 112 dB Scaled Distance: _____

Peak Particle Velocity: 0.00 ips Operator: Colin Matheson

Remarks: _____

Vibration Analysis by: _____ Date: _____

Vibra-Tech Engineers, Inc.

VTE 103

International Printing

VIBRA-TECH ENGINEERS BLAST AND SEISMOGRAPHIC REPORT

BLAST DATA

Client: Felix & Scisson

Job Location: INEL

Date: 10-9-89 Blast No. 9 Time 13:19

Exact Blast Location:

No. of Holes 1 Diameter ____ in. Avg. Depth 400-390 ft. Subgrade — ft.

Spacing ____ ft. Burden — ft. Avg. Stemming ____ ft.

Make & Type of Explosives:

30 -34gr. shaped charges ____ lbs.

____ lbs.

____ lbs.

____ lbs.

____ lbs.

Total Explosives ____ lbs.

Delay Make:

Delay Type & Nos.:

Min. delay period ____ ms.

Max. lbs./delay period 2.24 lbs.

Blaster: Alvin Williams

Weather: 60° F Clear

Wind Direction & Speed: Calm

DETAILED BLAST INFORMATION

Detail or Diagram Blast Layout: Number of rows; Number of holes in each row; Number of decks per hole; amount of stemming between powder columns; nominal delay time between decks, holes and rows. (Use reverse side if necessary.)

SEISMOGRAPH DATA

Seismograph No. 2290 Range/Gain Setting 1.0 ips

Everlert Only: Trigger Level ____ ips

Date of last: Shake Table Calibration ____ Microphone Calibration ____

Air channel low frequency limit 2 Hertz

Exact Seismograph Location:

Seismograph Distance & Direction from Blast:

Meters: Peak Overpressure 108 dB Scaled Distance:

Peak Particle Velocity 0.18 ips Operator: Colin Mathesson

Remarks:

Vibration Analysis by: ____ Date: ____

VTE 103

VIBRA-TECH ENGINEERS BLAST AND SEISMOGRAPHIC REPORT

BLAST DATA

Client: Fenix & Scisson

Job Location: INEL

Date: 10-9-89 Blast No.: 9 Time: 13:19

Exact Blast Location:

No. of Holes: 1 Diameter: ____ in. Avg. Depth: 400-396 ft. Subgrade: ____ ft.

Spacing: ____ ft. Burden: ____ ft. Avg. Stemming: ____ ft.

Make & Type of Explosives:

30-34 gram shaped charges ____ lbs.

____ lbs.

____ lbs.

____ lbs.

____ lbs.

Total Explosives: ____ lbs.

Delay Make:

Delay Type & Nos.:

Min. delay period: ____ ms.

Max. lbs./delay period: 2.24 ~~30~~ lbs.

Blaster: Alvin Williams

Weather: 60°F

Wind Direction & Speed: Calm

DETAILED BLAST INFORMATION

Detail or Diagram Blast Layout: Number of rows; Number of holes in each row; Number of decks per hole; amount of stemming between powder columns; nominal delay time between decks, holes and rows. (Use reverse side if necessary.)

SEISMOGRAPH DATA

Seismograph No.: 2845 Range/Gain Setting: 1.0 ips

Everlert Only: Trigger Level ____ ips

Date of last: Shake Table Calibration: ____ Microphone Calibration: ____

Air channel low frequency limit: 2 Hertz

Exact Seismograph Location:

Seismograph Distance & Direction from Blast:

Meters: Peak Overpressure: 108 dB Scaled Distance:

Peak Particle Velocity: 0.01 ips Operator: Colin Matheson

Remarks:

Vibration Analysis by: ____ Date: ____

VTE 10

VIBRA-TECH ENGINEERS BLAST AND SEISMOGRAPHIC REPORT

BLAST DATA

Client: Fenix & Scisson

Job Location: INEL

Date: 10-9-89 Blast No.: 9 Time: 13:19

Exact Blast Location:

No. of Holes: 1 Diameter: ____ in. Avg. Depth: ~~400~~ 390 ft. Subgrade: — ft.

Spacing: — ft. Burden: — ft. Avg. Stemming: — ft.

Make & Type of Explosives:

30-34 gram charges ____ lbs.

____ lbs.

____ lbs.

____ lbs.

____ lbs.

Total Explosives ____ lbs.

Delay Make:

Delay Type & Nos.:

Min. delay period ____ ms.

Max. lbs./delay period: 2.24 ~~350~~ lbs.

Blaster: Alvin Williams

Weather: 60°F Clear

Wind Direction & Speed: Calm

DETAILED BLAST INFORMATION

Detail or Diagram Blast Layout: Number of rows; Number of holes in each row; Number of decks per hole; amount of stemming between powder columns; nominal delay time between decks, holes and rows. (Use reverse side if necessary.)

SEISMOGRAPH DATA

Seismograph No.: 2789 Range/Gain Setting: 1.0 ips

Everlert Only: Trigger Level ____ ips

Date of last: Shake Table Calibration ____ Microphone Calibration ____

Air channel low frequency limit: 2 Hertz

Exact Seismograph Location:

Seismograph Distance & Direction from Blast:

Meters: Peak Overpressure: 110 dB Scaled Distance:

Peak Particle Velocity: 0.00 ips Operator: Colin Matheson

Remarks:

Vibration Analysis by: ____ Date: ____

VTE 105

VIBRA-TECH ENGINEERS BLAST AND SEISMOGRAPHIC REPORT

BLAST DATA

Client: Fenix & Sasson

Job Location: INEL

Date: 10-10-89 Blast No.: 10 Time: 08:24

Exact Blast Location:

No. of Holes: 1 Diameter: ____ in. Avg. Depth: 390-380 ft. Subgrade: ____ ft.

Spacing: ____ ft. Burden: ____ ft. Avg. Stemming: ____ ft.

Make & Type of Explosives: 20 -34 gram charges ____ lbs.

____ lbs.

____ lbs.

____ lbs.

____ lbs.

Total Explosives: 1.5 lbs.

Delay Make:

Delay Type & Nos.:

Min. delay period: ____ ms.

Max. lbs./delay period: 1.5 lbs.

Blaster: Alvin Williams

Weather: 45° Clear

Wind Direction & Speed: Calm

DETAILED BLAST INFORMATION

Detail or Diagram Blast Layout: Number of rows; Number of holes in each row; Number of decks per hole; amount of stemming between powder columns; nominal delay time between decks, holes and rows. (Use reverse side if necessary.)

SEISMOGRAPH DATA

Seismograph No.: 2290 Range/Gain Setting: 1.0 ips

Everlert Only: Trigger Level ____ ips

Date of last: Shake Table Calibration: ____ Microphone Calibration: ____

Air channel low frequency limit: 2 Hertz

Exact Seismograph Location: 8' south of well Against North Face of Bldg. 666

Seismograph Distance & Direction from Blast: 8' South

Meters: Peak Overpressure: 109 dB Scaled Distance:

Peak Particle Velocity: 0.11 ips Operator: Colin MacHesson

Remarks:

Vibration Analysis by: ____ Date: ____

VTE 10

Vibra-Tech Engineers

VIBRA-TECH ENGINEERS BLAST AND SEISMOGRAPHIC REPORT

BLAST DATA

Client: Fenix & Scisson

Job Location: INEL

Date: 10-10-89 Blast No.: 10 Time: 08:24

Exact Blast Location:

No. of Holes: 1 Diameter: ____ in. Avg. Depth: ____ ft. Subgrade: ____ ft.

Spacing: ____ ft. Burden: ____ ft. Avg. Stemming: ____ ft.

Make & Type of Explosives:

20 - 34 gram shaped charges

____ lbs.

____ lbs.

____ lbs.

____ lbs.

____ lbs.

Total Explosives: 1.5 lbs.

Delay Make:

Delay Type & Nos.:

Min. delay period: ____ ms.

Max. lbs./delay period: 1.5 lbs.

Blaster: Alvin Williams

Weather: 45° F Clear

Wind Direction & Speed: Calm

DETAILED BLAST INFORMATION

Detail or Diagram Blast Layout: Number of rows; Number of holes in each row; Number of decks per hole; amount of stemming between powder columns; nominal delay time between decks, holes and rows. (Use reverse side if necessary.)

SEISMOGRAPH DATA

Seismograph No.: 2845 Range/Gain Setting: 1.0 ips

Everlert Only: Trigger Level ____ ips

Date of last: Shake Table Calibration: ____ Microphone Calibration: ____

Air channel low frequency limit: ____ Hertz

Exact Seismograph Location: In Fast Control Room (inside)

Seismograph Distance & Direction from Blast: 30' South

Meters: Peak Overpressure: 110 dB Scaled Distance:

Peak Particle Velocity: 0.00 ips Operator: Colin Mathason

Remarks:

Vibration Analysis by: ____ Date: ____

VTE1

VIBRA-TECH ENGINEERS BLAST AND SEISMOGRAPHIC REPORT

BLAST DATA

Client: Fenix & Sisson

Job Location: INEL

Date: 10-10-89 Blast No.: 10 Time: 08:24

Exact Blast Location:

No. of Holes: 1 Diameter: ____ in. Avg. Depth: ____ ft. Subgrade: ____ ft.

Spacing: ____ ft. Burden: ____ ft. Avg. Stemming: ____ ft.

Make & Type of Explosives:

20 - 34 gram charges ____ lbs.

____ lbs.

____ lbs.

____ lbs.

____ lbs.

Total Explosives: 1.5 lbs.

Delay Make:

Delay Type & Nos.:

Min. delay period: ____ ms.

Max. lbs./delay period: 1.5 lbs.

Blaster: Alvin Williams

Weather: 45° F Clear

Wind Direction & Speed: Calm

DETAILED BLAST INFORMATION

Detail or Diagram Blast Layout: Number of rows; Number of holes in each row; Number of decks per hole; amount of stemming between powder columns; nominal delay time between decks, holes and rows. (Use reverse side if necessary.)

SEISMOGRAPH DATA

Seismograph No.: 2789 Range/Gain Setting: 1.0 ips

Everlert Only: Trigger Level ____ ips

Date of last: Shake Table Calibration: ____ Microphone Calibration: ____

Air channel low frequency limit: 2 Hertz

Exact Seismograph Location: -33 level in Access Corridor of Bldg 666

Seismograph Distance & Direction from Blast:

Meters: Peak Overpressure: 103 dB Scaled Distance:

Peak Particle Velocity: 0.00 ips Operator: Colin Matheson

Remarks:

Vibration Analysis by: ____ Date:

VIBRA-TECH ENGINEERS BLAST AND SEISMOGRAPHIC REPORT

BLAST DATA

Client: Fenix & Scisson

Job Location: INEL

Date: 10-10-89 Blast No.: 11 Time: 09:04

Exact Blast Location:

No. of Holes: 1 Diameter: ____ in. Avg. Depth: 380-370 ft. Subgrade: ____ ft.

Spacing: ____ ft. Burden: ____ ft. Avg. Stemming: ____ ft.

Make & Type of Explosives: 20-34 gram shaped charges ____ lbs.

____ lbs.

____ lbs.

____ lbs.

____ lbs.

Total Explosives: 1.5 lbs.

Delay Make:

Delay Type & Nos.:

Min. delay period: ____ ms.

Max. lbs./delay period: 1.5 lbs.

Blaster: Alvin Williams

Weather: 45°F Clear

Wind Direction & Speed: Calm

DETAILED BLAST INFORMATION

Detail or Diagram Blast Layout: Number of rows; Number of holes in each row; Number of decks per hole; amount of stemming between powder columns; nominal delay time between decks, holes and rows. (Use reverse side if necessary.)

SEISMOGRAPH DATA

Seismograph No.: 2290 Range/Gain Setting: 1.0 ips

Everlert Only: Trigger Level ____ ips

Date of last: Shake Table Calibration: ____ Microphone Calibration: ____

Air channel low frequency limit: 2 Hertz

Exact Seismograph Location:

Seismograph Distance & Direction from Blast:

Meters: Peak Overpressure: 111 dB Scaled Distance:

Peak Particle Velocity: 0.11 ips Operator: Colin Mathesson

Remarks:

Vibration Analysis by: ____ Date: ____

VIBRA-TECH ENGINEERS BLAST AND SEISMOGRAPHIC REPORT

BLAST DATA

Client: Fenix & Scisson

Job Location: INEL

Date: 10-10-99 Blast No.: 11 Time: 09:04

Exact Blast Location:

No. of Holes: 1 Diameter: ____ in. Avg. Depth: 380-370 ft. Subgrade: ____ ft.

Spacing: ____ ft. Burden: ____ ft. Avg. Stemming: ____ ft.

Make & Type of Explosives:

20 - 34 gr. shaped charges ____ lbs.

____ lbs.

____ lbs.

____ lbs.

____ lbs.

Total Explosives: 1.5 lbs.

Delay Make:

Delay Type & Nos.:

Min. delay period: ____ ms.

Max. lbs./delay period: 1.5 lbs.

Blaster: Alvin Williams

Weather: 45° F

Wind Direction & Speed: Calm

DETAILED BLAST INFORMATION

Detail or Diagram Blast Layout: Number of rows; Number of holes in each row; Number of decks per hole; amount of stemming between powder columns; nominal delay time between decks, holes and rows. (Use reverse side if necessary.)

SEISMOGRAPH DATA

Seismograph No.: 2845 Range/Gain Setting: 1.0 ips

Everiert Only: Trigger Level ____ ips

Date of last: Shake Table Calibration: ____ Microphone Calibration: ____

Air channel low frequency limit: 2 Hertz

Exact Seismograph Location: In F.A.S.T. Control Room Bld. 666

Seismograph Distance & Direction from Blast:

Meters: Peak Overpressure: 103 dB Scaled Distance:

Peak Particle Velocity: 0.00 ips Operator: Colin Matheson

Remarks:

Vibration Analysis by: ____ Date: ____

VIBRA-TECH ENGINEERS BLAST AND SEISMOGRAPHIC REPORT

BLAST DATA

Client: Felix & Sussow

Job Location: INEL

Date: 10-10-89 Blast No.: 11 Time: 09:04

Exact Blast Location:

No. of Holes: 1 Diameter: ____ in. Avg. Depth: 380-370 ft. Subgrade: ____ ft.

Spacing: ____ ft. Burden: ____ ft. Avg. Stemming: ____ ft.

Make & Type of Explosives: 20-34gram shaped charges ____ lbs.

____ lbs.

____ lbs.

____ lbs.

____ lbs.

Total Explosives: 1.5 lbs.

Delay Make:

Delay Type & Nos.:

Min. delay period: ____ ms.

Max. lbs./delay period: 1.5 lbs.

Blaster:

Weather: 45°F Clear

Wind Direction & Speed: Calm

DETAILED BLAST INFORMATION

Detail or Diagram Blast Layout: Number of rows; Number of holes in each row; Number of decks per hole; amount of stemming between powder columns; nominal delay time between decks, holes and rows. (Use reverse side if necessary.)

SEISMOGRAPH DATA

Seismograph No.: 2769 Range/Gain Setting: ____ ips

Everlert Only: Trigger Level ____ ips

Date of last: Shake Table Calibration: ____ Microphone Calibration: ____

Air channel low frequency limit: 2 Hertz

Exact Seismograph Location: Inside Bldg 666 level -33 in Access corridor

Seismograph Distance & Direction from Blast:

Meters: Peak Overpressure: 108 dB; Peak Particle Velocity: 0.00 ips

Scaled Distance:

Operator: Colin Matheson

Remarks:

Vibration Analysis by: ____ Date: ____

VIBRA-TECH ENGINEERS BLAST AND SEISMOGRAPHIC REPORT

BLAST DATA

Client: Fenix & Scisson

Job Location: INEL

Date: 10-10-89 Blast No.: 12 Time: ~~[illegible]~~ 09:30

Exact Blast Location:

No. of Holes: 1 Diameter: ____ in. Avg. Depth: 370-360 ft. Subgrade: ____ ft.

Spacing: ____ ft. Burden: ____ ft. Avg. Stemming: ____ ft.

Make & Type of Explosives:

20 - 34 gram shaped charges ____ lbs.

____ lbs.

____ lbs.

____ lbs.

____ lbs.

Total Explosives: 1.5 lbs.

Delay Make:

Delay Type & Nos.:

Min. delay period: ____ ms.

Max. lbs./delay period: 1.5 lbs.

Blaster:

Weather:

Wind Direction & Speed:

DETAILED BLAST INFORMATION

Detail or Diagram Blast Layout: Number of rows; Number of holes in each row; Number of decks per hole; amount of stemming between powder columns; nominal delay time between decks, holes and rows. (Use reverse side if necessary.)

SEISMOGRAPH DATA

Seismograph No.: 2290 Range/Gain Setting: ____ ips

Everlert Only: Trigger Level ____ ips

Date of last: Shake Table Calibration: ____ Microphone Calibration: ____

Air channel low frequency limit: 2 Hertz

Exact Seismograph Location: 8' South of well head

Seismograph Distance & Direction from Blast:

Meters: Peak Overpressure: 111 dB Scaled Distance:

Peak Particle Velocity: 0.11 ips Operator: Colin Matheson

Remarks:

Vibration Analysis by: ____ Date: ____

VIBRA-TECH ENGINEERS BLAST AND SEISMOGRAPHIC REPORT

BLAST DATA

Client: Fenix & Sassow

Job Location: INEL

Date: 10-10-89 Blast No.: 12 Time: 09:30

Exact Blast Location:

No. of Holes: 1 Diameter: ____ in. Avg. Depth: 370-360 ft. Subgrade: ____ ft.

Spacing: ____ ft. Burden: ____ ft. Avg. Stemming: ____ ft.

Make & Type of Explosives:

20 - 34 gram charges ____ lbs.

____ lbs.

____ lbs.

____ lbs.

____ lbs.

Total Explosives: 1.5 lbs.

Delay Make:

Delay Type & Nos.:

Min. delay period: ____ ms.

Max. lbs./delay period: 1.5 lbs.

Blaster:

Weather: 50° F Clear

Wind Direction & Speed: Calm

DETAILED BLAST INFORMATION

Detail or Diagram Blast Layout: Number of rows; Number of holes in each row; Number of decks per hole; amount of stemming between powder columns; nominal delay time between decks, holes and rows. (Use reverse side if necessary.)

SEISMOGRAPH DATA

Seismograph No.: 2845 Range/Gain Setting: 1.0 ips

Everlert Only
Trigger Level
ips

Date of last: Shake Table Calibration: ____ Microphone Calibration: ____

Air channel low frequency limit: 2 Hertz

Exact Seismograph Location:

Seismograph Distance & Direction from Blast:

Meters: Peak Overpressure: 107 dB Scaled Distance:

Peak Particle Velocity: 0.00 ips Operator: Colin Matheson

Remarks:

Vibration Analysis by: ____ Date: ____

VIBRA-TECH ENGINEERS BLAST AND SEISMOGRAPHIC REPORT

BLAST DATA

Client: Felix & Sasson

Job Location: INEL

Date: 10-10-89 Blast No.: 12 Time: 09:30

Exact Blast Location:

No. of Holes: 1 Diameter: ____ in. Avg. Depth: ~~370-360~~ ft. Subgrade: ____ ft.

Spacing: ____ ft. Burden: ____ ft. Avg. Stemming: ____ ft.

Make & Type of Explosives:

20-34 grams shaped charges ____ lbs.

____ lbs.

____ lbs.

____ lbs.

____ lbs.

Total Explosives: 1.5 lbs.

Delay Make:

Delay Type & Nos.:

Min. delay period: ____ ms.

Max. lbs./delay period: 1.5 lbs.

Blaster: Alvin Williams

Weather: 50°F Clear

Wind Direction & Speed: Calm

DETAILED BLAST INFORMATION

Detail or Diagram Blast Layout: Number of rows; Number of holes in each row; Number of decks per hole; amount of stemming between powder columns; nominal delay time between decks, holes and rows. (Use reverse side if necessary.)

SEISMOGRAPH DATA

Seismograph No.: 2789 Range/Gain Setting: 1.0 ips

Everlert Only: Trigger Level ____ ips

Date of last: Shake Table Calibration: ____ Microphone Calibration: ____

Air channel low frequency limit: ____ Hertz

Exact Seismograph Location: Inside Bldg 666 on -33 level Access Corridor

Seismograph Distance & Direction from Blast:

Meters: Peak Overpressure: 109 dB Scaled Distance:

Peak Particle Velocity: 0.00 ips Operator: Colin Matheson

Remarks:

Vibration Analysis by: ____ Date: ____

VIBRA-TECH ENGINEERS BLAST AND SEISMOGRAPHIC REPORT

BLAST DATA

Client: Fenix & Scisson

Job Location: TNEL

Date: 10-17-89 Blast No. 13 Time: 08:18

Exact Blast Location:

No. of Holes: 1 Diameter: 24 in. Avg. Depth: ~~[illegible]~~ 130 ft. Subgrade: — ft.

Spacing: ft. Burden: ft. Avg. Stemming: ft.

Make & Type of Explosives: 2 - 34 gram charges ___ lbs.

___ lbs.

___ lbs.

___ lbs.

___ lbs.

Total Explosives: 0.149 lbs.

Delay Make:

Delay Type & Nos.:

Min. delay period: ms.

Max. lbs./delay period: 0.149 lbs.

Blaster:

Weather: 50° F High Overcast

Wind Direction & Speed: East 5mph

DETAILED BLAST INFORMATION

Detail or Diagram Blast Layout: Number of rows; Number of holes in each row; Number of decks per hole; amount of stemming between powder columns; nominal delay time between decks, holes and rows. (Use reverse side if necessary.)

SEISMOGRAPH DATA

Seismograph No.: 2290 Range/Gain Setting: 1.0 ips

Everlert Only
Trigger Level ips

Date of last: Shake Table Calibration: Microphone Calibration:

Air channel low frequency limit: 2 Hertz

Exact Seismograph Location: On north side of building 666 8' from well head

Seismograph Distance & Direction from Blast: 8' South

Meters: Peak Overpressure: dB Scaled Distance:

Peak Particle Velocity: 0.11 ips Operator: Colin Matheson

Remarks:

Vibration Analysis by: Date:

VTE 103

Vibra-Tech Engineers

VIBRA-TECH ENGINEERS BLAST AND SEISMOGRAPHIC REPORT

BLAST DATA

Client: Fenix & Sasson

Job Location: INEL

Date: 10-12-89 Blast No. 13 Time: 08:18

Exact Blast Location:

No. of Holes: 1 Diameter: 24 in. Avg. Depth: 130 ft. Subgrade: ft.

Spacing: ft. Burden: ft. Avg. Stemming: ft.

Make & Type of Explosives:

2 -34 gram charges ___ lbs.

___ lbs.

___ lbs.

___ lbs.

___ lbs.

Total Explosives: 0.149 lbs.

Delay Make:

Delay Type & Nos.:

Min. delay period: ms.

Max. lbs./delay period: 0.149 lbs.

Blaster:

Weather: 50° F High Overcast

Wind Direction & Speed:

DETAILED BLAST INFORMATION

Detail or Diagram Blast Layout: Number of rows; Number of holes in each row; Number of decks per hole; amount of stemming between powder columns; nominal delay time between decks, holes and rows. (Use reverse side if necessary.)

SEISMOGRAPH DATA

Seismograph No.: 2789 Range/Gain Setting: 1.0 ips

Everlert Only
Trigger Level ips

Date of last: Shake Table Calibration: Microphone Calibration:

Air channel low frequency limit: 2 Hertz

Exact Seismograph Location: In Access corridor of level -33 in Bldg 666

Seismograph Distance & Direction from Blast: 60' South

Meters: Peak Overpressure: 106 dB Scaled Distance:

Peak Particle Velocity: 0.00 ips Operator: Colin Matheson

Remarks:

Vibration Analysis by: Date:

Vibra-Tech Engineers, Inc.

VTE 1

VIBRA-TECH ENGINEERS BLAST AND SEISMOGRAPHIC REPORT

BLAST DATA

Client: Fenix & Sisson

Job Location: INEL

Date: 10-12-89 Blast No. 13 Time: 08:18

Exact Blast Location:

No. of Holes: 1 Diameter: 24 in. Avg. Depth: 130 ft. Subgrade: ft.

Spacing: ft. Burden: ft. Avg. Stemming: ft.

Make & Type of Explosives:

2- 34gram charges lbs.

lbs.

lbs.

lbs.

lbs.

Total Explosives: 0.149 lbs.

Delay Make:

Delay Type & Nos.:

Min. delay period: ms.

Max. lbs./delay period: 0.149 lbs.

Blaster:

Weather: 50°F High Overcast

Wind Direction & Speed: East 5mph

DETAILED BLAST INFORMATION

Detail or Diagram Blast Layout: Number of rows; Number of holes in each row; Number of decks per hole; amount of stemming between powder columns; nominal delay time between decks, holes and rows. (Use reverse side if necessary.)

SEISMOGRAPH DATA

Seismograph No.: 2845 Range/Gain Setting: 1.0 ips

Everlert Only: Trigger Level ips

Date of last: Shake Table Calibration: Microphone Calibration:

Air channel low frequency limit: 2 Hertz

Exact Seismograph Location: In F.A.S.T. control room at Bldg 666

Seismograph Distance & Direction from Blast: 30' South

Meters: Peak Overpressure: 110 dB Scaled Distance:

Peak Particle Velocity: 0.00 ips Operator:

Remarks:

Vibration Analysis by: Date:

Vibra-Tech Engineers, Inc.

VTE I

VIBRA-TECH ENGINEERS BLAST AND SEISMOGRAPHIC REPORT

BLAST DATA

Client: Fenix & Scisson

Job Location: TNEL

Date: 10-17-89 Blast No.: 14 Time: 0

Exact Blast Location:

No. of Holes: 1 Diameter: 24 in. Avg. Depth: ~~130-140~~ 120-130 ft. Subgrade: ft.

Spacing: ft. Burden: ft. Avg. Stemming: ft.

Make & Type of Explosives: 20-34 gram charges ___ lbs.

___ lbs.

___ lbs.

___ lbs.

___ lbs.

Total Explosives: 1.5 lbs.

Delay Make:

Delay Type & Nos.:

Min. delay period: ms.

Max. lbs./delay period: 1.5 lbs.

Blaster: Alvin Williams

Weather:

Wind Direction & Speed:

DETAILED BLAST INFORMATION

Detail or Diagram Blast Layout: Number of rows; Number of holes in each row; Number of decks per hole; amount of stemming between powder columns; nominal delay time between decks, holes and rows. (Use reverse side if necessary.)

SEISMOGRAPH DATA

Seismograph No.: 2290 Range/Gain Setting: 1.0 ips

Everlert Only: Trigger Level ips

Date of last: Shake Table Calibration: Microphone Calibration:

Air channel low frequency limit: 2 Hertz

Exact Seismograph Location: North side of Bldg 666

Seismograph Distance & Direction from Blast: 8' South

Meters: Peak Overpressure: 108 dB Scaled Distance:

Peak Particle Velocity: 0.18 ips Operator: Colin Matheson

Remarks:

Vibration Analysis by: Date:

Vibra-Tech Engineers, Inc.

VTE:

VIBRA-TECH ENGINEERS BLAST AND SEISMOGRAPHIC REPORT

BLAST DATA

Client: Fenix & Scisson

Job Location: INEL

Date: 10-12-89 Blast No.: 14 Time: 08:49

Exact Blast Location:

No. of Holes: 1 Diameter: 24 in. Avg. Depth: ~~130-140~~ 120-130 ft. Subgrade: ft.

Spacing: ft. Burden: ft. Avg. Stemming: ft.

Make & Type of Explosives: 20-34 gram charges ___ lbs.

___ lbs.

___ lbs.

___ lbs.

___ lbs.

Total Explosives: 1.5 lbs.

Delay Make:

Delay Type & Nos.:

Min. delay period: ms.

Max. lbs./delay period: 1.5 lbs.

Blaster: Alvin Williams

Weather: 50° F High Overcast

Wind Direction & Speed: East 5mph

DETAILED BLAST INFORMATION

Detail or Diagram Blast Layout: Number of rows; Number of holes in each row; Number of decks per hole; amount of stemming between powder columns; nominal delay time between decks, holes and rows. (Use reverse side if necessary.)

SEISMOGRAPH DATA

Seismograph No.: 2945 Range/Gain Setting: 1.0 ips

Everlert Only: Trigger Level ips

Date of last: Shake Table Calibration: Microphone Calibration:

Air channel low frequency limit: Hertz

Exact Seismograph Location: In F.A.S.T. Control Room at Bldg. 666

Seismograph Distance & Direction from Blast:

Meters: Peak Overpressure: 107 dB Scaled Distance:

Peak Particle Velocity: 0.00 ips Operator: Colin Matheson

Remarks:

Vibration Analysis by: Date:

VIBRA-TECH ENGINEERS BLAST AND SEISMOGRAPHIC REPORT

BLAST DATA

Client: Fenix & Scisson

Job Location: INEL

Date: 10-12-89 Blast No.: 14 Time: 08:49

Exact Blast Location:

No. of Holes: 1 Diameter: 24 in. Avg. Depth: 120-130 ft. Subgrade: ft.

Spacing: ft. Burden: ft. Avg. Stemming: ft.

Make & Type of Explosives:

20 - 34 gram charges lbs.

lbs.

lbs.

lbs.

lbs.

Total Explosives: 1.5 lbs.

Delay Make:

Delay Type & Nos.:

Min. delay period: ms.

Max. lbs./delay period: 1.5 lbs.

Blaster:

Weather: 50° F High Overcast

Wind Direction & Speed: East 5mph.

DETAILED BLAST INFORMATION

Detail or Diagram Blast Layout: Number of rows; Number of holes in each row; Number of decks per hole; amount of stemming between powder columns; nominal delay time between decks, holes and rows. (Use reverse side if necessary.)

SEISMOGRAPH DATA

Seismograph No.: 2789 Range/Gain Setting: 1.0 ips

Everlert Only: Trigger Level ips

Date of last: Shake Table Calibration: Microphone Calibration:

Air channel low frequency limit: 2 Hertz

Exact Seismograph Location:

Seismograph Distance & Direction from Blast:

Meters: Peak Overpressure: 110 dB Scaled Distance:

Peak Particle Velocity: 0.00 ips Operator: Colin Matheson

Remarks:

Vibration Analysis by: Date:

VIBRA-TECH ENGINEERS BLAST AND SEISMOGRAPHIC REPORT

BLAST DATA

Client: Fenix & Scisson

Job Location: INEL

Date: 10-12-89 Blast No. 15 Time: 09:12

Exact Blast Location:

No. of Holes: 1 Diameter: 24 in. Avg. Depth: ~~[illegible]~~ 110-120 ft. Subgrade: ft.

Spacing: ft. Burden: ft. Avg. Stemming: ft.

Make & Type of Explosives: 20 - 34 gram charges ___ lbs.

___ lbs.

___ lbs.

___ lbs.

___ lbs.

Total Explosives: 1.5 lbs.

Delay Make:

Delay Type & Nos.:

Min. delay period: ms.

Max. lbs./delay period: 1.5 lbs.

Blaster: Alvin Williams

Weather: 50° F High Overcast

Wind Direction & Speed: East 5 mph

DETAILED BLAST INFORMATION

Detail or Diagram Blast Layout: Number of rows; Number of holes in each row; Number of decks per hole; amount of stemming between powder columns; nominal delay time between decks, holes and rows. (Use reverse side if necessary.)

SEISMOGRAPH DATA

Seismograph No.: 2290 Range/Gain Setting: 1.0 ips

Everlert Only: Trigger Level ips

Date of last: Shake Table Calibration: Microphone Calibration:

Air channel low frequency limit: 2 Hertz

Exact Seismograph Location: North side of Bldg 666

Seismograph Distance & Direction from Blast: 8' South

Meters: Peak Overpressure: 107 dB Scaled Distance:

Peak Particle Velocity: 0.19 ips Operator: Colin Matheson

Remarks:

Vibration Analysis by: Date:

Vibra-Tech Engineers, Inc.

VTE International Inc

VIBRA-TECH ENGINEERS BLAST AND SEISMOGRAPHIC REPORT

BLAST DATA

Client: Fenix & Scisson

Job Location: INEL

Date: 10-12-89 Blast No.: 15 Time: 09:12

Exact Blast Location:

No. of Holes: 1 Diameter: 24 in. Avg. Depth: 110-120 ft. Subgrade: ft.

Spacing: ft. Burden: ft. Avg. Stemming: ft.

Make & Type of Explosives: 20 -34 gram charges lbs.

lbs.

lbs.

lbs.

lbs.

Total Explosives: 1.5 lbs.

Delay Make:

Delay Type & Nos.:

Min. delay period: ms.

Max. lbs./delay period: 1.5 lbs.

Blaster: Alvin Williams

Weather: 50° F High Overcast

Wind Direction & Speed: East South

DETAILED BLAST INFORMATION

Detail or Diagram Blast Layout: Number of rows; Number of holes in each row; Number of decks per hole; amount of stemming between powder columns; nominal delay time between decks, holes and rows. (Use reverse side if necessary.)

SEISMOGRAPH DATA

Seismograph No.: 2845 Range/Gain Setting: 1.0 ips

Everlert Only
Trigger Level ips

Date of last: Shake Table Calibration: Microphone Calibration:

Air channel low frequency limit: 2 Hertz

Exact Seismograph Location: In E.A.S.T. Control Room

Seismograph Distance & Direction from Blast: 30' South

Meters: Peak Overpressure: 109 dB Scaled Distance:

Peak Particle Velocity: 0.01 ips Operator: Colin Matheson

Remarks:

Vibration Analysis by: Date:

VIBRA-TECH ENGINEERS BLAST AND SEISMOGRAPHIC REPORT

BLAST DATA

Client: Fenik & Sasson

Job Location: INEL

Date: 10-12-89 Blast No.: 15 Time: 09:12

Exact Blast Location:

No. of Holes: Diameter: in. Avg. Depth: ~~[illegible]~~ 110-120 ft. Subgrade: ft.

Spacing: ft. Burden: ft. Avg. Stemming: ft.

Make & Type of Explosives: 20-34 gram charges lbs.

Total Explosives: 1.5 lbs.

Delay Make:

Delay Type & Nos.:

Min. delay period: ms.

Max. lbs./delay period: 1.5 lbs.

Blaster: Alvin Williams

Weather: 50° F High Overcast

Wind Direction & Speed: East 5mph

DETAILED BLAST INFORMATION

Detail or Diagram Blast Layout: Number of rows; Number of holes in each row; Number of decks per hole; amount of stemming between powder columns; nominal delay time between decks, holes and rows. (Use reverse side if necessary.)

SEISMOGRAPH DATA

Seismograph No.: 2789 Range/Gain Setting: 1.0 ips

Everlert Only: Trigger Level ips

Date of last: Shake Table Calibration: Microphone Calibration:

Air channel low frequency limit: 2 Hertz

Exact Seismograph Location: Access corridor -30 level Bldg 666

Seismograph Distance & Direction from Blast:

Meters: Peak Overpressure: 108 dB Scaled Distance:

Peak Particle Velocity: 0.00 ips Operator: Colin Matheson

Remarks:

Vibration Analysis by: Date:

VTE

Vibra-Tech Engineers, Inc.

VIBRA-TECH ENGINEERS BLAST AND SEISMOGRAPHIC REPORT

BLAST DATA

Client: Fenix & Scisson

Job Location: INEL

Date: 10-13-89 Blast No.: 16 Time: 08:18

Exact Blast Location:

No. of Holes: 1 Diameter: 24 in. Avg. Depth: 97'-107' ft. Subgrade: ft.

Spacing: ft. Burden: ft. Avg. Stemming: ft.

Make & Type of Explosives:

20 - 34 gram charges of RDX

Total Explosives: 1.5 lbs.

Delay Make:

Delay Type & Nos.:

Min. delay period: ms.

Max. lbs./delay period: 1.5 lbs.

Blaster: Alvin Williams

Weather: 50° F Overcast

Wind Direction & Speed: Calm

DETAILED BLAST INFORMATION

Detail or Diagram Blast Layout: Number of rows; Number of holes in each row; Number of decks per hole; amount of stemming between powder columns; nominal delay time between decks, holes and rows. (Use reverse side if necessary.)

SEISMOGRAPH DATA

Seismograph No.: 2290 Range/Gain Setting: 10 ips

Everlert Only — Trigger Level: ips

Date of last: Shake Table Calibration: Microphone Calibration:

Air channel low frequency limit: 2 Hertz

Exact Seismograph Location: Against north side of Bldg 666

Seismograph Distance & Direction from Blast: 8' South

Meters: Peak Overpressure: 105 dB Scaled Distance:

Peak Particle Velocity: 0.17 ips Operator: Colin Matheson

Remarks:

Vibration Analysis by: Date:

VTE

VIBRA-TECH ENGINEERS BLAST AND SEISMOGRAPHIC REPORT

BLAST DATA

Client: Fenix & Scisson

Job Location: INEL

Date: 10-13-89 Blast No.: 16 Time: 08:18

Exact Blast Location:

No. of Holes: 1 Diameter: 24 in. Avg. Depth: 97'-107' ft. Subgrade: ft.

Spacing: ft. Burden: ft. Avg. Stemming: ft.

Make & Type of Explosives:

20-34 gram charges of RDX

Total Explosives: 1.5 lbs.

Delay Make:

Delay Type & Nos.:

Min. delay period: ms.

Max. lbs./delay period: 1.5 lbs.

Blaster: Alvin Williams

Weather: 50°F Overcast

Wind Direction & Speed: Calm

DETAILED BLAST INFORMATION

Detail or Diagram Blast Layout: Number of rows; Number of holes in each row; Number of decks per hole; amount of stemming between powder columns; nominal delay time between decks, holes and rows. (Use reverse side if necessary.)

SEISMOGRAPH DATA

Seismograph No.: 2845 Range/Gain Setting: 1.0 ips

Everlert Only — Trigger Level: ips

Date of last: Shake Table Calibration: Microphone Calibration:

Air channel low frequency limit: 2 Hertz

Exact Seismograph Location: In F.A.S.T. Control Room of Bldg CCC

Seismograph Distance & Direction from Blast: 30' South

Meters: Peak Overpressure: 109 dB Scaled Distance:

Peak Particle Velocity: 0.00 ips Operator: Colin Matheson

Remarks:

Vibration Analysis by: Date:

VTE 1

VIBRA-TECH ENGINEERS BLAST AND SEISMOGRAPHIC REPORT

BLAST DATA

Client: Fenix & Sisson

Job Location: INEL

Date: 10-13-89 Blast No.: 16 Time: 08:18

Exact Blast Location:

No. of Holes: 1 Diameter: 24 in. Avg. Depth: 97-107 ft. Subgrade: ft.

Spacing: ft. Burden: ft. Avg. Stemming: ft.

Make & Type of Explosives:

20-34 gram charges of RDX

Total Explosives: 1.5 lbs.

Delay Make:

Delay Type & Nos.:

Min. delay period: ms.

Max. lbs./delay period: 1.5 lbs.

Blaster: Alvin William

Weather: 50°F Overcast

Wind Direction & Speed: Calm

DETAILED BLAST INFORMATION

Detail or Diagram Blast Layout: Number of rows; Number of holes in each row; Number of decks per hole; amount of stemming between powder columns; nominal delay time between decks, holes and rows. (Use reverse side if necessary.)

SEISMOGRAPH DATA

Seismograph No.: 2789 Range/Gain Setting: 1.0 ips

Everlert Only: Trigger Level ips

Date of last: Shake Table Calibration: Microphone Calibration:

Air channel low frequency limit: 2 Hertz

Exact Seismograph Location: In Access corridor of Bldg 666 on -33 level

Seismograph Distance & Direction from Blast:

Meters: Peak Overpressure: dB Scaled Distance:

Peak Particle Velocity: 0.00 ips Operator: Colin Matheson

Remarks:

Vibration Analysis by: Date:

VTE

VIBRA-TECH ENGINEERS BLAST AND SEISMOGRAPHIC REPORT

BLAST DATA

Client Fenix & Scisson

Job Location INEL

Date 10-13-89 Blast No. 17 Time 08:52

Exact Blast Location

No. of Holes 1 Diameter 24 in. Avg. Depth ____ ft. Subgrade ____ ft.

Spacing ____ ft. Burden ____ ft. Avg. Stemming ____ ft.

Make & Type of Explosives:

20-34gram charges of RDX

____ lbs.

____ lbs.

____ lbs.

____ lbs.

____ lbs.

Total Explosives 1.5 lbs.

Delay Make

Delay Type & Nos.

Min. delay period ____ ms.

Max. lbs./delay period 1.5 lbs.

Blaster Alvin Williams

Weather ~~Calm~~ 50°F Overcast

Wind Direction & Speed Calm

DETAILED BLAST INFORMATION

Detail or Diagram Blast Layout: Number of rows; Number of holes in each row; Number of decks per hole; amount of stemming between powder columns; nominal delay time between decks, holes and rows. (Use reverse side if necessary.)

SEISMOGRAPH DATA

Seismograph No. 2290 Range/Gain Setting 1.0 ips

Everlert Only
Trigger Level ____ ips

Date of last: Shake Table Calibration ____ Microphone Calibration ____

Air channel low frequency limit 2 Hertz

Exact Seismograph Location 8' of well against north side of Bldg 666

Seismograph Distance & Direction from Blast 8' South

Meters { Peak Overpressure 105 dB Scaled Distance ____
Peak Particle Velocity 0.20 ips Operator Colin Matheson

Remarks:

Vibration Analysis by:

VIBRA-TECH ENGINEERS BLAST AND SEISMOGRAPHIC REPORT

BLAST DATA

Client: Ferris & Scisson

Job Location: INEL

Date: 10-13-89 Blast No.: 17 Time: 08:52

Exact Blast Location:

No. of Holes: 1 Diameter: 24 in. Avg. Depth: 87'-97' ft. Subgrade: ft.

Spacing: ft. Burden: ft. Avg. Stemming: ft.

Make & Type of Explosives:

20-34 gram charges of RDX

Total Explosives: 1.5 lbs.

Delay Make:

Delay Type & Nos.:

Min. delay period: ms.

Max. lbs./delay period: 1.5 lbs.

Blaster: Alvin Williams

Weather: 50°F Overcast

Wind Direction & Speed: Calm

DETAILED BLAST INFORMATION

Detail or Diagram Blast Layout: Number of rows; Number of holes in each row; Number of decks per hole; amount of stemming between powder columns; nominal delay time between decks, holes and rows. (Use reverse side if necessary.)

SEISMOGRAPH DATA

Seismograph No.: 2845 Range/Gain Setting: 1.0 ips

Evarlert Only: Trigger Level ips

Date of last: Shake Table Calibration: Microphone Calibration:

Air channel low frequency limit: 2 Hertz

Exact Seismograph Location: In E.A.S.T. Control Room at Bld 666

Seismograph Distance & Direction from Blast: 30' South

Meters: Peak Overpressure: 109 dB Scaled Distance:

Peak Particle Velocity: 0.00 ips Operator: Colin Matheson

Remarks:

Vibration Analysis by: Date:

VIBRA-TECH ENGINEERS BLAST AND SEISMOGRAPHIC REPORT

BLAST DATA

Client: Felix & Sassow

Job Location: INEL

Date: 10-13-89 Blast No. 17 Time: ~~[illegible]~~ 08:52

Exact Blast Location:

No. of Holes: 1 Diameter: 24 in. Avg. Depth: 87-97 ft. Subgrade: ft.

Spacing: ft. Burden: ft. Avg. Stemming: ft.

Make & Type of Explosives:

20 - 34 gram charges of RDX

Total Explosives: 1.5 lbs.

Delay Make:

Delay Type & Nos.:

Min. delay period: ms.

Max. lbs./delay period: 1.5 lbs.

Blaster: Alvin Williams

Weather: 50°F Overcast

Wind Direction & Speed: Calm

DETAILED BLAST INFORMATION

Detail or Diagram Blast Layout: Number of rows; Number of holes in each row; Number of decks per hole; amount of stemming between powder columns; nominal delay time between decks, holes and rows. (Use reverse side if necessary.)

SEISMOGRAPH DATA

Seismograph No.: 2789 Range/Gain Setting: 1.0 ips

Everlert Only: Trigger Level ips

Date of last: Shake Table Calibration: Microphone Calibration:

Air channel low frequency limit: 2 Hertz

Exact Seismograph Location: Inv Access corridor of Bldg 666 on -33 level

Seismograph Distance & Direction from Blast:

Meters: Peak Overpressure: 116 dB Scaled Distance:

Peak Particle Velocity: 0.00 ips Operator: Colin Matheson

Remarks:

Vibration Analysis by: Date:

VTE 1

Vibra-Tech Engineers, Inc.

VIBRA-TECH ENGINEERS BLAST AND SEISMOGRAPHIC REPORT

BLAST DATA

Client: Frank & Scasson

Job Location: INEL

Date: 10-13-89 Blast No. 18 Time: 09:20

Exact Blast Location:

No. of Holes: 1 Diameter: 24 in. Avg. Depth: 77'-87' ft. Subgrade: ft.

Spacing: ft. Burden: ft. Avg. Stemming: ft.

Make & Type of Explosives:

20 - 34 gram charges of RDX

Total Explosives: 1.5 lbs.

Delay Make:

Delay Type & Nos.:

Min. delay period: ms.

Max. lbs./delay period: 1.5 lbs.

Blaster: Alvin Williams

Weather: 55° F Overcast

Wind Direction & Speed: Calm

DETAILED BLAST INFORMATION

Detail or Diagram Blast Layout: Number of rows; Number of holes in each row; Number of decks per hole; amount of stemming between powder columns; nominal delay time between decks, holes and rows. (Use reverse side if necessary.)

SEISMOGRAPH DATA

Seismograph No.: 2290 Range/Gain Setting: 1.0 ips

Evertert Only: Trigger Level ips

Date of last: Shake Table Calibration: Microphone Calibration:

Air channel low frequency limit: 2 Hertz

Exact Seismograph Location: 8' south of well head on north side of Bldg 666

Seismograph Distance & Direction from Blast: 8' South

Meters: Peak Overpressure: 104 dB Scaled Distance:

Peak Particle Velocity: 0.17 ips Operator: Colin Matheson

Remarks:

Vibration Analysis by: Date:

VTE 1

Vibra-Tech Engineers, Inc.

VIBRA-TECH ENGINEERS BLAST AND SEISMOGRAPHIC REPORT

BLAST DATA

Client: Fenix & Scisson

Job Location: INEL

Date: 10-13-89 Blast No.: 18 Time: 09:20

Exact Blast Location:

No. of Holes: 1 Diameter: 24 in. Avg. Depth: 77-87 ft. Subgrade: — ft.

Spacing: — ft. Burden: — ft. Avg. Stemming: — ft.

Make & Type of Explosives:

20 - 34 gram shaped charges of RDX

Total Explosives: 1.5 lbs.

Delay Make:

Delay Type & Nos.:

Min. delay period: ms.

Max. lbs./delay period: 1.5 lbs.

Blaster: Alvin Williams

Weather: 55° Overcast

Wind Direction & Speed: Calm

DETAILED BLAST INFORMATION

Detail or Diagram Blast Layout: Number of rows; Number of holes in each row; Number of decks per hole; amount of stemming between powder columns; nominal delay time between decks, holes and rows. (Use reverse side if necessary.)

SEISMOGRAPH DATA

Seismograph No.: 2845 Range/Gain Setting: 1.0 ips

Everlert Only: Trigger Level ips

Date of last: Shake Table Calibration: Microphone Calibration:

Air channel low frequency limit: 2 Hertz

Exact Seismograph Location: In F.A.S.T Control Room of Bldg 666

Seismograph Distance & Direction from Blast:

Meters: Peak Overpressure: 109 dB Scaled Distance:

Peak Particle Velocity: 0.00 ips Operator: Colin Matheson

Remarks:

Vibration Analysis by: Date:

VTE1

Vibra-Tech Engineers, Inc.

VIBRA-TECH ENGINEERS BLAST AND SEISMOGRAPHIC REPORT

BLAST DATA

Client: Fenix & Scisson

Job Location: INEL

Date: 10-13-89 Blast No.: 18 Time: 09:20

Exact Blast Location:

No. of Holes: 1 Diameter: 24 in. Avg. Depth: 77-87 ft. Subgrade: ft.

Spacing: ft. Burden: ft. Avg. Stemming: ft.

Make & Type of Explosives: 20 - 34 gram charges of RDX

Total Explosives: 1.5 lbs.

Delay Make:

Delay Type & Nos.:

Min. delay period: ms.

Max. lbs./delay period: 1.5 lbs.

Blaster: Alvin Williams

Weather: 55° F Overcast

Wind Direction & Speed: Calm

DETAILED BLAST INFORMATION

Detail or Diagram Blast Layout: Number of rows; Number of holes in each row; Number of decks per hole; amount of stemming between powder columns; nominal delay time between decks, holes and rows. (Use reverse side if necessary.)

SEISMOGRAPH DATA

Seismograph No.: Range/Gain Setting: ips

Evertert Only: Trigger Level ips

Date of last: Shake Table Calibration: Microphone Calibration:

Air channel low frequency limit: Hertz

Exact Seismograph Location:

Seismograph Distance & Direction from Blast:

Meters: Peak Overpressure: dB Scaled Distance:

Peak Particle Velocity: ips Operator:

Remarks:

Vibration Analysis by: Date:

VTE 1

Vibra-Tech Engineers, Inc.

VIBRA-TECH ENGINEERS BLAST AND SEISMOGRAPHIC REPORT

BLAST DATA

Client: Fenix & Scisson

Job Location: INEL

Date: 10-13-89 Blast No.: 19 Time: 09:48

Exact Blast Location:

No. of Holes: 1 Diameter: 24 in. Avg. Depth: 67'-77' ft. Subgrade: — ft.

Spacing: — ft. Burden: — ft. Avg. Stemming: — ft.

Make & Type of Explosives:

20 - 34 gram charges of RDX

Total Explosives: 1.5 lbs.

Delay Make:

Delay Type & Nos.:

Min. delay period: ms.

Max. lbs./delay period: 1.5 lbs.

Blaster:

Weather: 55° F Overcast

Wind Direction & Speed: SW 10 mph

DETAILED BLAST INFORMATION

Detail or Diagram Blast Layout: Number of rows; Number of holes in each row; Number of decks per hole; amount of stemming between powder columns; nominal delay time between decks, holes and rows. (Use reverse side if necessary.)

SEISMOGRAPH DATA

Seismograph No.: 2290 Range/Gain Setting: 1.0 ips

Everlert Only — Trigger Level: ips

Date of last: Shake Table Calibration: Microphone Calibration:

Air channel low frequency limit: 2 Hertz

Exact Seismograph Location: South of wellhead & on the north side of Bldg 666

Seismograph Distance & Direction from Blast: 8' South

Meters: Peak Overpressure: 103 dB Scaled Distance:

Peak Particle Velocity: 0.14 ips Operator: Colin Matheson

Remarks:

Vibration Analysis by: Date:

VTE

Vibra-Tech Engineers, Inc.

VIBRA-TECH ENGINEERS BLAST AND SEISMOGRAPHIC REPORT

BLAST DATA

Client: Fenix & Scisson

Job Location: INEL

Date: 10-13-89 Blast No.: 19 Time: @ 9:48

Exact Blast Location:

No. of Holes: 1 Diameter: 24 in. Avg. Depth: ft. Subgrade: ft.

Spacing: ft. Burden: ft. Avg. Stemming: ft.

Make & Type of Explosives:

20 -34 gram charges of RDX

Total Explosives: 1.5 lbs.

Delay Make:

Delay Type & Nos.:

Min. delay period: ms.

Max. lbs./delay period: 1.5 lbs.

Blaster: Alvin Williams

Weather: 55° F Overcast

Wind Direction & Speed: SW 10mph

DETAILED BLAST INFORMATION

Detail or Diagram Blast Layout: Number of rows; Number of holes in each row; Number of decks per hole; amount of stemming between powder columns; nominal delay time between decks, holes and rows. (Use reverse side if necessary.)

SEISMOGRAPH DATA

Seismograph No.: 2845 Range/Gain Setting: 1.0 ips

Everlert Only: Trigger Level ips

Date of last: Shake Table Calibration: Microphone Calibration:

Air channel low frequency limit: 2 Hertz

Exact Seismograph Location: In F.A.S.T. Control Room of Bldg 666

Seismograph Distance & Direction from Blast: 30' South

Meters: Peak Overpressure: 106 dB Scaled Distance:

Peak Particle Velocity: 0.00 ips Operator: Colin Matheson

Remarks:

Vibration Analysis by: Date:

VTE

VIBRA-TECH ENGINEERS BLAST AND SEISMOGRAPHIC REPORT

BLAST DATA

Client: Fenix & Scisson

Job Location: INEL

Date: 10-13-89 Blast No. 19 Time: 09:48

Exact Blast Location:

No. of Holes: 1 Diameter: 24 in. Avg. Depth: 67.77 ft. Subgrade: ft.

Spacing: ft. Burden: ft. Avg. Stemming: ft.

Make & Type of Explosives:

20 - 34 gram shaped charges of RDX

Total Explosives: 1.5 lbs.

Delay Make:

Delay Type & Nos.:

Min. delay period: ms.

Max. lbs./delay period: 1.5 lbs.

Blaster: Alvin Williams

Weather: 55° F Overcast

Wind Direction & Speed: SW 15 mph

DETAILED BLAST INFORMATION

Detail or Diagram Blast Layout: Number of rows; Number of holes in each row; Number of decks per hole; amount of stemming between powder columns; nominal delay time between decks, holes and rows. (Use reverse side if necessary.)

SEISMOGRAPH DATA

Seismograph No.: 2789 Range/Gain Setting: 1.0 ips

Everlert Only: Trigger Level ips

Date of last: Shake Table Calibration: Microphone Calibration:

Air channel low frequency limit: 2 Hertz

Exact Seismograph Location: In access corridor of Bldg 666 on the -33 level

Seismograph Distance & Direction from Blast:

Meters: Peak Overpressure: 107 dB Scaled Distance:

Peak Particle Velocity: 0.00 ips Operator: Colin Matheson

Remarks:

Vibration Analysis by: Date:

VTE 1

VIBRA-TECH ENGINEERS BLAST AND SEISMOGRAPHIC REPORT

BLAST DATA

Client: Ferris & Sussman

Job Location: INEL

Date: 10-13-89 Blast No.: 20 Time: 11:38

Exact Blast Location:

No. of Holes: 1 Diameter: 24 in. Avg. Depth: 57-67 ft. Subgrade: — ft.

Spacing: — ft. Burden: — ft. Avg. Stemming: — ft.

Make & Type of Explosives:

20-34 gram charges of RDX

Total Explosives: 1.5 lbs.

Delay Make:

Delay Type & Nos.:

Min. delay period: ms.

Max. lbs./delay period: 1.5 lbs.

Blaster: Alan Williams

Weather: 55°F Overcast

Wind Direction & Speed: SW 15 mph

DETAILED BLAST INFORMATION

Detail or Diagram Blast Layout: Number of rows; Number of holes in each row; Number of decks per hole; amount of stemming between powder columns; nominal delay time between decks, holes and rows. (Use reverse side if necessary.)

SEISMOGRAPH DATA

Seismograph No.: 2290 Range/Gain Setting: 1.0 ips

Everlert Only: Trigger Level ips

Date of last: Shake Table Calibration: Microphone Calibration:

Air channel low frequency limit: 2 Hertz

Exact Seismograph Location: South of wellhead next to the north side of Bldg. 666

Seismograph Distance & Direction from Blast: 8' South

Meters: Peak Overpressure: 103 dB Scaled Distance:

Peak Particle Velocity: 0.10 ips Operator: Colin Matheson

Remarks:

Vibration Analysis by: Date:

VTE 1

Vibra-Tech Engineers, Inc.

VIBRA-TECH ENGINEERS BLAST AND SEISMOGRAPHIC REPORT

BLAST DATA

Client: Fenix & Scisson

Job Location: INEL

Date: 10-13-89 Blast No.: 20 Time: 11:38

Exact Blast Location:

No. of Holes: 1 Diameter: 24 in. Avg. Depth: 57-67 ft. Subgrade: ft.

Spacing: ft. Burden: ft. Avg. Stemming: ft.

Make & Type of Explosives:

20-34 gram charges of RDX

Total Explosives: 1.5 lbs.

Delay Make:

Delay Type & Nos.:

Min. delay period: ms.

Max. lbs./delay period: 1.5 lbs.

Blaster: Alvin Williams

Weather:

Wind Direction & Speed:

DETAILED BLAST INFORMATION

Detail or Diagram Blast Layout: Number of rows; Number of holes in each row; Number of decks per hole; amount of stemming between powder columns; nominal delay time between decks, holes and rows. (Use reverse side if necessary.)

SEISMOGRAPH DATA

Seismograph No.: 2845 Range/Gain Setting: 10 ips

Evertert Only — Trigger Level: ips

Date of last: Shake Table Calibration: Microphone Calibration:

Air channel low frequency limit: 2 Hertz

Exact Seismograph Location: In F.A.S.T. Control Room of Bldg 666

Seismograph Distance & Direction from Blast: 30' South

Meters: Peak Overpressure: 108 dB Scaled Distance:

Peak Particle Velocity: 0.00 ips Operator: Colin Matheson

Remarks: Shot Dry

Vibration Analysis by: Date:

VTE1

VIBRA-TECH ENGINEERS BLAST AND SEISMOGRAPHIC REPORT

006209

BLAST DATA

Client: Fenix & Scisson

Job Location: INEL

Date: 10-13-89 Blast No.: 20 Time: 11:38

Exact Blast Location:

No. of Holes: 1 Diameter: 24 in. Avg. Depth: 57-67 ft. Subgrade: ft.

Spacing: ft. Burden: ft. Avg. Stemming: ft.

Make & Type of Explosives: 20-34 gram shaped charge) lbs.

of RDX lbs.

lbs.

lbs.

lbs.

Total Explosives: 1.5 lbs.

Delay Make:

Delay Type & Nos.:

Min. delay period: ms.

Max. lbs./delay period: 1.5 lbs.

Blaster: Alvin Williams

Weather: 55°F Overcast

Wind Direction & Speed: SW 15 mph

DETAILED BLAST INFORMATION

Detail or Diagram Blast Layout: Number of rows; Number of holes in each row; Number of decks per hole; amount of stemming between powder columns; nominal delay time between decks, holes and rows. (Use reverse side if necessary.)

SEISMOGRAPH DATA

Seismograph No.: 2789 Range/Gain Setting: 1.0 ips

Everlert Only: Trigger Level ips

Date of last: Shake Table Calibration: Microphone Calibration:

Air channel low frequency limit: 2 Hertz

Exact Seismograph Location: In Access corridor at -33 level in Bldg 666

Seismograph Distance & Direction from Blast:

Meters: Peak Overpressure: 109 dB Scaled Distance:

Peak Particle Velocity: 0.00 ips Operator: Colin Matheson

Remarks: Shot Dry

Vibration Analysis by: Date:

Vibra-Tech Engineers, Inc.

VTE International

VIBRA-TECH ENGINEERS BLAST AND SEISMOGRAPHIC REPORT

006209

BLAST DATA

Client: Felix & Sisson

Job Location: INEL

Date: 10-13-89 Blast No. 21 Time: 12:02

Exact Blast Location:

No. of Holes: 1 Diameter: 24 in. Avg. Depth: 47-57 ft. Subgrade: — ft.

Spacing: — ft. Burden: ✓ ft. Avg. Stemming: — ft.

Make & Type of Explosives:

20 34 gram charges of RDX

Total Explosives: 1.5 lbs.

Delay Make:

Delay Type & Nos.:

Min. delay period: ms.

Max. lbs./delay period: 1.5 lbs.

Blaster: Alvin Williams

Weather: 55° F Overcast

Wind Direction & Speed: SW 15mph

DETAILED BLAST INFORMATION

Detail or Diagram Blast Layout: Number of rows; Number of holes in each row; Number of decks per hole; amount of stemming between powder columns; nominal delay time between decks, holes and rows. (Use reverse side if necessary.)

SEISMOGRAPH DATA

Seismograph No.: 2290 Range/Gain Setting: 1.0 ips

Everlert Only: Trigger Level ips

Date of last: Shake Table Calibration: Microphone Calibration:

Air channel low frequency limit: 2 Hertz

Exact Seismograph Location: South of wellhead next to north side of Bldg 666

Seismograph Distance & Direction from Blast: 8' South

Meters: Peak Overpressure: 103 dB Scaled Distance:

Peak Particle Velocity: 0.11 ips Operator: Colin Matheson

Remarks:

Vibration Analysis by: Date:

VTE1

Vibra-Tech Engineers, Inc.

VIBRA-TECH ENGINEERS BLAST AND SEISMOGRAPHIC REPORT

006209

BLAST DATA

Client: Felix Sasson

Job Location: INEL

Date: 10-13-89 Blast No.: 21 Time: 12:02

Exact Blast Location:

No. of Holes: 1 Diameter: 24 in. Avg. Depth: 47'-57' ft. Subgrade: ft.

Spacing: ft. Burden: ft. Avg. Stemming: ft.

Make & Type of Explosives:

20 -34 gram shaped charges of RDX

Total Explosives: 1.5 lbs.

Delay Make:

Delay Type & Nos.:

Min. delay period: ms.

Max. lbs./delay period: 1.5 lbs.

Blaster: Alvin Williams

Weather: 55° F Overcast

Wind Direction & Speed: SW 15mph

DETAILED BLAST INFORMATION

Detail or Diagram Blast Layout: Number of rows; Number of holes in each row; Number of decks per hole; amount of stemming between powder columns; nominal delay time between decks, holes and rows. (Use reverse side if necessary.)

SEISMOGRAPH DATA

Seismograph No.: 2845 Range/Gain Setting: 1.0 ips

Everlert Only: Trigger Level ips

Date of last: Shake Table Calibration: Microphone Calibration:

Air channel low frequency limit: 2 Hertz

Exact Seismograph Location: In F.A.S.T. Control Room of Bldg 666

Seismograph Distance & Direction from Blast: 30' South

Meters: Peak Overpressure: 109 dB Scaled Distance:

Peak Particle Velocity: 0.00 ips Operator: Colin Matheson

Remarks:

Vibration Analysis by: Date:

VTE 1

Vibra-Tech Engineers, Inc.

VIBRA-TECH ENGINEERS BLAST AND SEISMOGRAPHIC REPORT

006209

BLAST DATA

Client: Frank & Sasson

Job Location: INEL

Date: 10-13-89 Blast No.: 21 Time: 12:02

Exact Blast Location:

No. of Holes: 1 Diameter: 24 in. Avg. Depth: 47-57 ft. Subgrade: — ft.

Spacing: — ft. Burden: — ft. Avg. Stemming: — ft.

Make & Type of Explosives:

20 - 34 gram charges of RDX

Total Explosives: 1.5 lbs.

Delay Make:

Delay Type & Nos.:

Min. delay period: ms.

Max. lbs./delay period: 1.5 lbs.

Blaster: Alvin Williams

Weather: 55°F Overcast

Wind Direction & Speed: SW 10 mph

DETAILED BLAST INFORMATION

Detail or Diagram Blast Layout: Number of rows; Number of holes in each row; Number of decks per hole; amount of stemming between powder columns; nominal delay time between decks, holes and rows. (Use reverse side if necessary.)

SEISMOGRAPH DATA

Seismograph No.: 2789 Range/Gain Setting: 1.0 ips

Evarlert Only: Trigger Level ips

Date of last: Shake Table Calibration: Microphone Calibration:

Air channel low frequency limit: 2 Hertz

Exact Seismograph Location: In access corridor of -33 level in Bldg 666

Seismograph Distance & Direction from Blast: 60' South

Meters: Peak Overpressure: 108 dB Scaled Distance:

Peak Particle Velocity: 0.00 ips Operator: Colin Matheson

Remarks:

Vibration Analysis by: Date:

VTE1

Vibra-Tech Engineers, Inc.

VIBRA-TECH ENGINEERS BLAST AND SEISMOGRAPHIC REPORT

006209

BLAST DATA

Client: Fluor & Sasson

Job Location: INEL

Date: 10-13-89 Blast No.: 22 Time: 12:23

Exact Blast Location:

No. of Holes: 1 Diameter: 24 in. Avg. Depth: 37-47 ft. Subgrade: — ft.

Spacing: ft. Burden: ft. Avg. Stemming: ft.

Make & Type of Explosives:

20-34 gram charges of RDX

Total Explosives: 1.5 lbs.

Delay Make:

Delay Type & Nos.:

Min. delay period: ms.

Max. lbs./delay period: 1.5 lbs.

Blaster: Alvin Williams

Weather: 55° F Overcast

Wind Direction & Speed: SW 15 mph

DETAILED BLAST INFORMATION

Detail or Diagram Blast Layout: Number of rows; Number of holes in each row; Number of decks per hole; amount of stemming between powder columns; nominal delay time between decks, holes and rows. (Use reverse side if necessary.)

SEISMOGRAPH DATA

Seismograph No.: 2290 Range/Gain Setting: 1.0 ips

Everlert Only: Trigger Level ips

Date of last: Shake Table Calibration: Microphone Calibration:

Air channel low frequency limit: 2 Hertz

Exact Seismograph Location: South of wellhead against north side of Bldg 666

Seismograph Distance & Direction from Blast:

Meters: Peak Overpressure: 109 dB Scaled Distance:

Peak Particle Velocity: 0.21 ips Operator: Colin Mathesen

Remarks:

Vibration Analysis by: Date:

VTE

Vibra-Tech Engineers

VIBRA-TECH ENGINEERS BLAST AND SEISMOGRAPHIC REPORT

006209

BLAST DATA

Client: Fenix & Scisson

Job Location: INEL

Date: 10-13-99 Blast No.: 22 Time: 12:23

Exact Blast Location:

No. of Holes: 1 Diameter: 24 in. Avg. Depth: 37-47' ft. Subgrade: ft.

Spacing: ft. Burden: ft. Avg. Stemming: ft.

Make & Type of Explosives:

20 - 34 gram shaped charges of RDX

Total Explosives: 1.5 lbs.

Delay Make:

Delay Type & Nos.:

Min. delay period: ms.

Max. lbs./delay period: 1.5 lbs.

Blaster: Alvin Williams

Weather: 55° F Overcast

Wind Direction & Speed: SW 15 mph

DETAILED BLAST INFORMATION

Detail or Diagram Blast Layout: Number of rows; Number of holes in each row; Number of decks per hole; amount of stemming between powder columns; nominal delay time between decks, holes and rows. (Use reverse side if necessary.)

SEISMOGRAPH DATA

Seismograph No.: 2845 Range/Gain Setting: 1.0 ips

Everlert Only: Trigger Level ips

Date of last: Shake Table Calibration: Microphone Calibration:

Air channel low frequency limit: 2 Hertz

Exact Seismograph Location: In F.A.S.T. Control Room of Bldg 666

Seismograph Distance & Direction from Blast: 30' South

Meters: Peak Overpressure: 109 dB Scaled Distance:

Peak Particle Velocity: 0.02 ips Operator: Colin Matheson

Remarks:

Vibration Analysis by: Date:

VTE

Vibra-Tech Engineers, Inc.

VIBRA-TECH ENGINEERS BLAST AND SEISMOGRAPHIC REPORT

006209

BLAST DATA

Client: Fenix & Scisson

Job Location: INEL

Date: 10-13-89 Blast No.: 22 Time: 12:23

Exact Blast Location:

No. of Holes: 1 Diameter: 24 in. Avg. Depth: 37-47 ft. Subgrade: ft.

Spacing: ft. Burden: ft. Avg. Stemming: ft.

Make & Type of Explosives:

20 - 34 gram shaped charges of RDX

Total Explosives: 1.5 lbs.

Delay Make:

Delay Type & Nos.:

Min. delay period: ms.

Max. lbs./delay period: 1.5 lbs.

Blaster: Alvin Williams

Weather: 55° F Overcast

Wind Direction & Speed: SW

DETAILED BLAST INFORMATION

Detail or Diagram Blast Layout: Number of rows; Number of holes in each row; Number of decks per hole; amount of stemming between powder columns; nominal delay time between decks, holes and rows. (Use reverse side if necessary.)

SEISMOGRAPH DATA

Seismograph No.: 2789 Range/Gain Setting: 1.0 ips

Everlert Only: Trigger Level ips

Date of last: Shake Table Calibration: Microphone Calibration:

Air channel low frequency limit: 2 Hertz

Exact Seismograph Location: Access corridor of level -33 Bldg 666

Seismograph Distance & Direction from Blast: South 60'

Meters: Peak Overpressure: 107 dB Scaled Distance:

Peak Particle Velocity: 0.06 ips Operator: Colin Matteson

Remarks:

Vibration Analysis by: Date:

Vibra-Tech Engineers, Inc.

VTE 1

International Print

VIBRA-TECH ENGINEERS BLAST AND SEISMOGRAPHIC REPORT

006209

BLAST DATA

Client: Fenix & Scisson

Job Location: INEL

Date: 10-13-89 Blast No.: 23 Time: 12:44

Exact Blast Location:

No. of Holes: 1 Diameter: 24 in. Avg. Depth: 27'-37' ft. Subgrade: — ft.

Spacing: — ft. Burden: — ft. Avg. Stemming: — ft.

Make & Type of Explosives:

20-34 gram charges of		lbs.
RDX		lbs.
		lbs.
		lbs.
		lbs.
Total Explosives	1.5	lbs.

Delay Make:

Delay Type & Nos.:

Min. delay period: ms.

Max. lbs./delay period: 1.5 lbs.

Blaster: Alvin Williams

Weather: 55° F Overcast

Wind Direction & Speed: SW 15mph

DETAILED BLAST INFORMATION

Detail or Diagram Blast Layout: Number of rows; Number of holes in each row; Number of decks per hole; amount of stemming between powder columns; nominal delay time between decks, holes and rows. (Use reverse side if necessary.)

SEISMOGRAPH DATA

Seismograph No.: 2290 Range/Gain Setting: 1.0 ips

Everlert Only
Trigger Level
ips

Date of last: Shake Table Calibration: Microphone Calibration:

Air channel low frequency limit: 2 Hertz

Exact Seismograph Location: South of wellhead on north side of Bldg 666

Seismograph Distance & Direction from Blast: 8' South

Meters: Peak Overpressure: 110 dB Scaled Distance:

Peak Particle Velocity: 0.12 ips Operator: Colin Matheson

Remarks:

Vibration Analysis by: Date:

VTE 1

Vibra-Tech Engineers, Inc.

VIBRA-TECH ENGINEERS BLAST AND SEISMOGRAPHIC REPORT

006209

BLAST DATA

Client: Fenix & Scisson

Job Location: INEL

Date: 10-13-89 Blast No. 23 Time: 12:44

Exact Blast Location:

No. of Holes: 1 Diameter: 24 in. Avg. Depth: 27-37 ft. Subgrade: — ft.

Spacing: — ft. Burden: — ft. Avg. Stemming: — ft.

Make & Type of Explosives:

20 - 34 gram shaped charges of RDX

Total Explosives: 1.5 lbs.

Delay Make:

Delay Type & Nos.:

Min. delay period: ms.

Max. lbs./delay period: 1.5 lbs.

Blaster: Alvin Williams

Weather: 55° F Overcast

Wind Direction & Speed: SW 15 mph

DETAILED BLAST INFORMATION

Detail or Diagram Blast Layout: Number of rows; Number of holes in each row; Number of decks per hole; amount of stemming between powder columns; nominal delay time between decks, holes and rows. (Use reverse side if necessary.)

SEISMOGRAPH DATA

Seismograph No.: 2845 Range/Gain Setting: 1.0 ips

Everlert Only: Trigger Level ips

Date of last: Shake Table Calibration: Microphone Calibration:

Air channel low frequency limit: 2 Hertz

Exact Seismograph Location: In F.A.S.T. Control Room Bldg 666

Seismograph Distance & Direction from Blast: South 30'

Meters: Peak Overpressure: 107 dB Scaled Distance:

Peak Particle Velocity: 0.01 ips Operator: Colin Matheson

Remarks:

Vibration Analysis by: Date:

VTE

Vibra-Tech Engineers, Inc.

VIBRA-TECH ENGINEERS BLAST AND SEISMOGRAPHIC REPORT

006209

BLAST DATA

Client: Fluor & Sasson

Job Location: INEL

Date: 10-13-89 Blast No. 23 Time: 12:44

Exact Blast Location: B

No. of Holes: 1 Diameter: 24 in. Avg. Depth: 27-37 ft. Subgrade: – ft.

Spacing: – ft. Burden: – ft. Avg. Stemming: – ft.

Make & Type of Explosives:

20 - 34 gram shaped charges of RDX

Total Explosives: 1.5 lbs.

Delay Make:

Delay Type & Nos.:

Min. delay period: ms.

Max. lbs./delay period: 1.5 lbs.

Blaster: Alvin Williams

Weather: 55°F Overcast

Wind Direction & Speed: SW 15 mph

DETAILED BLAST INFORMATION

Detail or Diagram Blast Layout: Number of rows; Number of holes in each row; Number of decks per hole; amount of stemming between powder columns; nominal delay time between decks, holes and rows. (Use reverse side if necessary.)

SEISMOGRAPH DATA

Seismograph No.: 2789 Range/Gain Setting: 1.0 ips

Everlert Only: Trigger Level ips

Date of last: Shake Table Calibration: Microphone Calibration:

Air channel low frequency limit: 2 Hertz

Exact Seismograph Location: -33 level at Blg 666 In Access corridor

Seismograph Distance & Direction from Blast: 60' South

Meters: Peak Overpressure: 106 dB Scaled Distance:

Peak Particle Velocity: 0.00 ips Operator: Colin Matheson

Remarks:

Vibration Analysis by: Date:

VTE

Vibra-Tech Engineers, Inc.