DOE/ID-10661
March 2000
Revision 1

U.S. Department of Energy
Idaho Operations Office

New Pump and Treat Facility Remedial Design Test Area North Operable Unit 1-07B

INEEL
IDAHO NATIONAL ENGINEERING & ENVIRONMENTAL LABORATORY

DOE/ID-10661
Revision 1

New Pump and Treat Facility Remedial Design Test Area North Operable Unit 1-07B

Published March 2000

Prepared for the
U.S. Department of Energy
Assistant Secretary for Environmental Management
Under DOE Idaho Operations Office
Contract DE-AC07-991D13727

DOE/ID-10661
March 2000
Revision 1

New Pump and Treat Facility Remedial Design
Test Area North Operable Unit 1-07B

Approved by:

Joseph S. Rothermel
OU 1-07B RD/RA Project Manager

3/7/00
Date

Allen E. Jantz
OU 1-07B Project Manager

3-7-00
Date

Prepared for the
U.S. Department of Energy
Assistant Secretary for Environmental Management
Under DOE Idaho Operations Office
Contract DE-AC07-99ID13727

CONTENTS

1. DESIGN OVERVIEW 1-1

1.1 Process System Requirements 1-1

2. SYSTEM DESCRIPTION 2-1

2.1 General 2-1

2.2 Process Equipment 2-1

2.3 Process Building 2-2

2.4 Extraction/Reinjection Wells 2-2

2.5 System Controls 2-2

2.6 Utilities 2-3

3. EQUIPMENT LIST 3-1

4. AIR EMISSIONS 4-1

5. ASSUMPTIONS 5-1

6. QUALITY LEVEL 6-1

7. REFERENCES 7-1

Appendix A—Design Drawings
Appendix B—Specifications
Appendix C—Calculations and Analysis
Appendix D—Agency Comments and Resolutions from the NPTF 30% Design Review

TABLES

1-1. Design influent concentration. 1-2

3-1. Equipment list and description 3-1

4-1. Air discharge limits 4-1

ACRONYMS

DCE	dichloroethylene
F&OR	Functional and Operational Requirements
GWTF	Groundwater Treatment Facility
LCC	Life Cycle Cost
MCL	maximum contaminant level
NPTF	New Pump and Treat Facility
OU	operable unit
PCE	tetrachloroethylene
RCRA	Resource Conservation and Recovery Act
ROD	Record of Decision
SOW	Scope of Work
TAN	Test Area North
TCE	trichloroethylene
VOC	volatile organic compound
WCE	well characterization and evaluation

New Pump and Treat Facility Remedial Design Test Area North Operable Unit 1-07B

1. DESIGN OVERVIEW

The New Pump and Treat Facility (NPTF) described in this document is a water treatment facility that will operate in support of early implementation of Phase C as described in the *Remedial Design/Remedial Action Scope of Work, Test Area North Final Groundwater Remediation Operable Unit 1-07B*, hereinafter referred to as the Scope of Work (SOW) (DOE-ID 1997). This system will support the long-term cleanup of the dissolved phase contaminated groundwater and will be located in the medial zone, approximately 610 m (2,000 ft) downgradient from the injection well TSF-05.

This document describes the pump and treat system design and is based on the system requirements established in the *Functional and Operational Requirements for the New Pump and Treat Facility* (Idaho National Engineering and Environmental Laboratory [INEEL] 1997a), hereinafter referred to as the functional and operational requirements (F&ORs) and the NPTF Life Cycle Cost (LCC) Analysis (OU 1-07B-EDF-016).

The NPTF design was prepared in two stages. The first stage was the 30% design that was submitted to the agencies for review. The second stage is the 90% design, which is contained in this document and is being submitted for review concurrent with the OU 1-07B Phase C Remedial Action Work Plan (DOE-ID 1999). The incorporation of the 90% design review comment resolutions will result in the NPTF final design. This 90% design package includes a system description, design drawings (Attachment A), design specifications (Attachment B), design calculations (Attachment C), and the Agency 30% design comments and resolutions (Attachment D). Any changes resulting from the agency review of this document will be incorporated into the final design package that will be used for procurement and construction of the NPTF.

Information regarding the application and compliance of specified ARARs, the remedial action cost estimate and the remedial action project schedule are included in the OU 1-07B Phase C Remedial Action Work Plan (DOE-ID 1999).

1.1 Process System Requirements

The following list is a summary of the general design parameters that were established in the NPTF F&ORs:

- The system will provide pumping and treatment of water at a normal operating flowrate of 567 L/min (150 gpm), with the capability for processing up to 945 L/min (250 gpm).
- Water will be extracted from Wells TAN-33, -38, -39, and -40 and will be reinjected into a new well, as shown on drawing C-1.
- The system will operate 24 hours/day, 7 days/week while maintaining a facility uptime of ≥90%.

- The system will be designed for a 30-year operating life.

- The air stripper must remove the volatile organic compounds (VOCs) in the extracted water to below the set maximum contamination level (MCL). Based on the sampling results obtained during the well characterization and evaluation (WCE) activities the design influent concentrations for VOCs are as shown in Table 1-1. In order to meet MCLs, the air stripper must obtain a minimum removal efficiency of 99.6%.

- No treatment of air stripper exhaust gases will be required.

- No treatment will be provided for radionuclide removal.

Table 1-1. Design influent concentration.

Contaminant	Design Influent Concentration (μg/L)
TCE	1,100
PCE	70
cis-DCE	120
trans-DCE	50

TCE = trichloroethylene
PCE = tetrachloroethylene
DCE = dichloroethylene

2. SYSTEM DESCRIPTION

2.1 General

The NPTF consists of the equipment and piping needed to (1) pump water from wells TAN-33, -38, -39 and -40; (2) treat the extracted water using parallel air stripper treatment trains; and (3) discharge the treated water into a new injection well. The system will pump water from a combination of the wells at a total flowrate of 568 L/min (150 gpm). This water will be treated using an air stripper system to below MCLs for VOCs. The treated water will then be reinjected into the aquifer using a new cross gradient injection well. The system will also be able to accept water from other sources with the use of an integrated transfer pump. The extracted groundwater will be considered F001-listed waste and all components of this system will meet secondary containment requirements required by the Resource, Conservation and Recovery Act (RCRA). After the air stripping process, the water will be considered to no longer contain the listed hazardous waste. This is dependent on being able to obtain a NLCID from the State of Idaho. The water will then be discharged as clean water, without having to comply with the secondary containment requirements of 40 CFR 264 Subpart J.

Operation and maintenance procedures will be developed during the construction timeframe and will be available for review prior to startup of the facility. The O&M procedures will include the routine inspections, cleaning, and maintenance required for the operational equipment.

2.2 Process Equipment

The extracted groundwater will be pumped into a 11,356 L (3,000 gal) surge tank. The surge tank will be a single wall, flat bottom vertical tank, 2.4 m diameter by 2.7 m high (8 ft diameter by 9 ft high). It will be constructed of high density polyethylene, and will have an atmospheric design pressure. The tank is sized to allow for approximately 10 minutes of operation at the maximum flowrate without processing of any water. This will provide adequate time for system stabilization during startup and shutdown activities. Water from the surge tank will be pumped into two air stripper treatment trains.

The NPTF will utilize two 568 L/min (150 gpm) air strippers in parallel. During routine operations the total influent flow will be divided equally between the two air stripper trains. Based on an overall flowrate range of 568 to 946 L/min (150 to 250 gpm) each individual air stripper train will treat water at a flowrate between 284 to 476 L/min (75 and 125 gpm). Standard model, low-profile air strippers will be used to provide removal of VOCs at an efficiency of at least 99.9% when processing water at 568 L/min (150 gpm).

Each air stripper unit will be equipped with a forced air blower that will input approximately 900 cfm of air in a counter flow configuration relative to the water stream. Each air stripper is approximately 1.8 m wide by 1.9 m deep by 2 m high (6 ft wide by 6.5 ft deep by 6.75 ft high), and can process water at a maximum flowrate of 606 L/min (160 gpm). Outside air will be supplied to the blowers through inlet ductwork, which will reduce the heating load for the building. The exhaust air will be vented vertically out through the roof of the building. Based on the design influent concentration and mass of VOCs, air pollution control equipment is not required for the exhaust air stream (further discussion on this topic is found in Section 4). Sufficient space will be provided around each air stripper to allow future upgrades if needed.

The discharge pumps will then pump the treated water to the injection well through 10 cm (4 in.) single wall pipe.

2.3 Process Building

The process building will be divided into three areas, a process equipment area, an electrical/control room, and a storage room. The process equipment area will house the surge tank, air strippers, pumps, piping, and associated equipment. The control room will house the main control panel, motor control center, and electrical circuit panels. The overall building size is approximately 8.8 m by 15 m (30 ft by 50 ft) with an interior height ranging from 3 to 4.8 m (10 to 18 ft). The building will have a concrete floor and curbing sized to provide secondary containment that will hold at least 110% of the capacity of the surge tank, air stripper sump, and interior piping. The floor under the process equipment will be sloped so that any leaking water will accumulate in a building sump. The sump will be equipped with a high level alarm tied into the systems main control panel. The floor will have an impermeable coating to prevent seeping of contaminated water into the concrete. The specific arrangement/design is shown in the drawing package.

2.4 Extraction/Reinjection Wells

Water may be extracted from wells TAN-33, TAN-38, TAN-39 and TAN-40. Each well is approximately 125 m (410 ft) deep and will be completed with an individually controlled submersible pump. Water may be extracted from any of the four wells, or a combination of wells, at various pumping rates. The total cumulative flow from all wells shall be approximately 568 L/min (150 gpm). The actual flowrate from each well is controlled using a manual valve at each of the wellheads. All influent piping will be double walled steel pipe with leak detection located at the low points of each pipe branch. Each well will be covered by a removable wellhouse with a concrete base. The concrete base will provide the secondary containment for the piping and valving until the double wall pipe begins and will be equipped with leak detection switches. The removable wellhouse will provide weather protection for the duration of this project and allow easy access to the wells in case of pump repair or replacement.

The enclosed design utilizes a new injection well for the treated effluent water. This well is located approximately 152 m (500 ft) from the extraction locations. The well will be designed to accept the 946 L/min (250 gpm) effluent water. The piping to the final extraction well location will be above ground single wall steel pipe. In order to protect the well casing, a discharge pipe will be placed downhole to a point just above the water table.

2.5 System Controls

Process controls will be provided to allow operational control during both manned and unmanned operations and to provide adequate environmental compliance controls to prevent any releases of hazardous waste to the environment.

Automatic controls will be provided to monitor the system operation. These monitoring controls will initiate a system alarm and automatically shut down all the well pumps and process equipment when the following situations are present:

- High water level in an air stripper sump
- High pressure against an air stripper blower
- Low pressure against an air stripper blower

- High water level in the surge tank
- High water level in the building sump
- High water level in a wellhouse floor
- Low water level in the extraction wells
- Leak detection in double wall pipe
- High water level in injection well.

Any of the above listed conditions will initiate a system shutdown. The system shutdown will initiate an automatic notification device that is programmed to page the appropriate operations personnel.

The operational controls for the extraction well pumps at the control panel will be for ON/OFF operation only. The flowrate from each of the extraction wells will be manually set using globe valves at each of the wellheads.

The water level in the surge tank will be controlled by regulating the position of a manual globe valve on one of the air stripper influent lines and by having an automatically controlled valve on the other air stripper influent line. With this configuration, variations in influent flow rate will be accommodated by adjusting the flowrate in only one treatment train. The surge tank water level will be maintained at a water level of approximately 25% of the tank capacity. Flow meters will record the amount of water processed and reinjected.

The water level in the air stripper sumps will be monitored using water level transmitters, which control the position of the level control valves located downstream of the air stripper discharge pumps. This configuration will maintain a constant air stripper sump water level.

System parameters will be able to be monitored at the main control panel using a preprogrammed touch panel.

2.6 Utilities

Electrical power is supplied by a pole mounted 300 kVA 13,800/480 V step-down transformer. The 480 V 3 phase overhead line will be mounted on newly installed poles and brought into the electrical room in the NPTF. Power will be supplied to a motor control center that will contain all motor starters, supply breakers for the heaters, supply breaker for the 480/120 V transformer, and a heat trace panel. The 480/120 V transformer will be surface mounted and supply the 120 V distribution panel. The 120 V distribution consists of two lighting circuits, two receptacle circuits, and 120 V control power. Additional circuits are provided for future expansion.

3. EQUIPMENT LIST

Table 3-1 provides a list of the major components for the NPTF system.

Table 3-1. Equipment list and description.

Tag No.	QTY	Equipment	Description
P-40	1	Well pump	6 in. diameter submersible pump with motor, 100 gpm @ 260 ft head, 3 in. NPT outlet size, stainless steel construction, no check valve, 10 hp 480 V, 3 phase, NEMA 3R motor, Grundfos model 135S100-6 (10 hp) or equal.
P-33, -38, -39	3	Well pumps	6 in. diameter Submersible pump with motor, 100 gpm @ 290 ft head, 3 in. NPT outlet size, stainless steel, no check valve, 10 hp 480 V, 3 phase, NEMA 3R motor, Grundfos model 80S100-10 (10 hp) or equal.
T-300	1	Surge tank	3000 gal flat bottom vertical cylindrical tank, approx 8 ft dia × 9 ft high, high density polyethylene or polypropylene, atmospheric design pressure, closed top with manhole, ladder, sight tube, and nozzles.
P-301	1	Transfer pump	Centrifugal self priming pump, 1 ½ in. suction, 1 ½ in. discharge, 30 gpm @ 48 psi, 10 ft suction lift, gray iron pump case, brass impeller, 2 hp, 480 V, 3 phase, Meyers model No. QP20-3, Famillian Northwest, Idaho Falls, or equal.
P-302, P-303, P-325	2	Air striper feed pumps	Centrifugal single stage pump, 2 1/2 in. suction, 2 in. discharge, 125 gpm @ 65 ft head, 26 ft NPSH available, cast iron pump case, brass impeller, 5 hp, 480 V, 3 phase.
P-304 P-305, P-326	2	Discharge pumps	Centrifugal single stage pump, 2 in. suction, 1 ½ in. discharge, 125 gpm @ 100 ft head, 22 ft NPSH available, bronze fit mechanical shaft seal, 5 hp, 480V, 3 phase, Peerless model 615J, Famillian Northwest, Idaho Falls or equal.
LCV-307	1	Level control valve	2 in. level control valve, CS or SST 150# body, electric actuator, modulating service, 55°F water, linear operating characteristic, rotary plug style, max ΔP across valve = 52 psi, valve sizing ΔP=13 psi at 125 gpm, C_V = 35 min @ 70 % open, input control signal 4-20 mAdc, available power for electric actuator will be 120 VAC, 60 Hz, single phase. Leslie Controls, Inc. K-max rotary control valve, full trim with Jordan actuator or equal.
LCV-308 LCV-309	2	Level control valve	2 in. level control valve, CS or SST 150# body, electric actuator, modulating service, 55°F water, linear operating characteristic, rotary plug style, max ΔP across valve = 52 psi, valve sizing ΔP=13 psi at 125 gpm, C_V = 35 min @ 70 % open, input control signal 4-20 mAdc, available power for electric actuator will be 120 VAC, 60 Hz, single phase. Leslie Controls, Inc. K-max rotary control valve, full trim with Jordan actuator or equal.

Table 3-1. (continued).

Tag No.	QTY	Equipment	Description
A-310 A-311	2	Air stripper	Low profile air stripper, four tray, 304L SS fabrication, integral mist eliminator, 3 – 160 gpm flow rate, with 7.5 hp forced draft blower, fresh air inlet flow rate 900 scfm, skid mounted, 6 ft × 6.5 ft × 6.75 ft high, 99.9% removal efficiency for TCE @ 125 gpm, 55°F water.
LT-307 LT-308 LT-309	3	Level transmitter	Ultrasonic continuous contact level transmitter, 4-20 mA output, 2" MNPT fitting size, Flowline Model LU20-7001, or equal.
LSL-306 LSH-306	2	Level switch	Capacitance water level switch 120 VAC, 1 phase, 60 Hz, polypropylene, flowline model AS13-1120, or equal.
LSL-33 LSL-38 LSL-39 LSL-40	4	Water level switch	Pressure transducer and relay switch 20 ft water level change, 120 VAC, 1 phase, 60 Hz relay. Pressure transducer shall have a 4-20 mA output.

4. AIR EMISSIONS

The air emissions from the air stripper will be limited based on the discharge limits set in the OU 1-07B Record of Decision (ROD) and additional modeling performed specifically for the NPTF. The ROD limits were set based on modeling of the Groundwater Treatment Facility (GWTF) location and operations.

Air emission modeling for the NPTF was performed using SCREEN3 software. This software is considerably more conservative then the ISC3 software used for previous OU 1-07B modeling activities. A previous version of the SCREEN software was also used for the air modeling performed in support of establishing the air emission limits set in the ROD. The results of the modeling are shown in Table 4-1. Comparing these values to the ones in the OU 1-07B ROD, the new NPTF values are the most conservative and will be used as the compliance limits during operation.

Vinyl chloride is included in this modeling even though it is not identified as a contaminant of concern. This contaminant was included due to the possibility that vinyl chloride could be generated if in situ bioremediation is implemented within the contaminated plume. Back calculating from the allowable air emission limit (0.33 lbs/hr), the NPTF influent must have a concentration of vinyl chloride that is less than 2,640 μg/L based on pumping at 250 gal/min.

As with the ROD values, the controlling contaminant discharge limit is the 0.083 kg (0.18 lb) per hour for TCE. When using the design influent concentration of 1,100 ug/L TCE, and a total influent flowrate of 946 L/min (250 gpm), the maximum possible air emission rate for TCE is 0.0626 kg (0.138 lb) per hour. Therefore, the air stripper emissions from the NPTF may be released to the atmosphere without the need for treatment of the air effluent stream.

Table 4-1. Air discharge limits.

Contaminant	NPTF Modeling (SCREEN3) lb/hr	ROD Limits (SCREEN) lb/hr	Max Contaminant Discharge (using design influent concentrations @ 250 gpm) lb/hr
TCE	0.18	0.185	0.138
PCE	4.9	5.05	0.009
DCE	564.3	1,254	0.021
VC	0.33	N/A	0.000

5. ASSUMPTIONS

The following assumptions are applicable to the NPTF design:

1. A no-longer contained-in determination will be obtained for the air stripper effluent water

2. The influent double wall pipe leading from Well TAN-33 can be installed under the roadway without interfering with the existing underground telephone lines, firewater lines, and/or other existing components

3. Vinyl chloride will not be present in the influent water at concentrations high enough to exceed the allowable air emission limit for vinyl chloride.

If any of these assumptions prove to be incorrect then a system evaluation will be performed and the appropriate modifications will be made. The probability for any of these assumptions to be incorrect is very low.

6. QUALITY LEVEL

The applicable quality level for all system components will be determined in accordance with the *Quality Program Plan for Environmental Restoration Program*, (INEEL 1997b), and MCP-540, *Graded Approach and Quality Level Assignment*, (INEEL 1997c). A quality level review will be performed after the design is final, during the procurement process. All required acceptance testing and inspections will be compiled into a construction inspection plan. This plan will be used during construction and will address all construction hold points listed in the specifications.

7. REFERENCES

DOE-ID, 1997, *Remedial Design/Remedial Action Scope of Work, Test Area North Final Groundwater Remediation Operable Unit 1-07B*, U.S. Department of Energy Idaho Operations Office, DOE/ID-10522, Revision 0.

DOE-ID, 1999, *Phase C Remedial Action Work Plan for Test Area North Final Groundwater Remediation, Operable Unit 1-07B*, U.S. Department of Energy Idaho Operations Office, DOE/ID-10679, Revision 0.

INEEL, 1997a, *Functional and Operational Requirements for the New Pump and Treat Facility*, Idaho National Engineering and Environmental Laboratory, INEEL/EXT-97-01335, Revision 0.

INEEL 1997b, *Quality Program Plan for Environmental Restoration Program*, Idaho National Engineering and Environmental Laboratory, PLN-125 (formerly QPP-149), Revision 0.

INEEL 1997c, *Graded Approach and Quality Level Assignment*, Idaho National Engineering and Environmental Laboratory, MCP-540, Revision 5.

Appendix A

Design Drawings

APPENDIX A
New Pump and Treat Facility
Drawing list

Drawing No.	Title	Revision	Date
G-1	Title Sheet and Drawing Index	1	November 1999
G-2	Site Location Map	1	November 1999
G-3	General Legend Sheet	0	October 1999
G-4	Process Flow Diagram	1	November 1999
C-1	Site Layout Plan	1	November 1999
C-2	NPTF Building Area Paving Plan and Sections	1	November 1999
C-3	Wellhouse Plan and Details	0	October 1999
A-0	Architectural Legends and General Notes	0	October 1999
A-1	Building Floor and Foundation Plans	1	November 1999
A-2	Building Elevations and Sections	0	October 1999
A-3	Building Wall Sections	0	October 1999
A-4	Building Foundation Sections and Details	0	October 1999
A-5	Door Details	0	October 1999
A-6	Wellhouse Plan and Elevations	1	November 1999
A-7	Wellhouse Sections and Details	0	October 1999
H-1	Heating and Ventilation Layout Plan	0	October 1999
H-2	Heating and Ventilation Elevations and Details	0	October 1999
H-3	Heating and Ventilation Diagram and Details	1	November 1999
P-1	Piping and Instrumentation Diagram Sheet 1	1	November 1999
P-2	Piping and Instrumentation Diagram Sheet 2	1	November 1999
P-3	Yard Piping Plan	1	November 1999
P-4	Piping Expansion Loop and Details	0	October 1999
P-5	Piping Details	1	November 1999
P-6	Extraction Wellhead Piping and Details	2	January 2000
P-7	Wellhead and Yard Piping Details	0	October 1999
P-8	Injection Wellhead Piping	1	November 1999
P-9	Building Piping Arrangement	1	November 1999
P-10	Building Piping Sections	1	November 1999
P-11	Building Piping Sections	1	November 1999
P-12	Hanger Details	1	November 1999
P-13	Hanger Details	1	November 1999
P-14	Exterior Piping Enlarged Plan	1	November 1999
P-15	Surge Tank Plan and Details	0	October 1999
P-16	Miscellaneous Piping Details	0	October 1999
P-17	FW Yard Piping and Details	0	October 1999
P-18	Pump Schedule	1	November 1999
I-1	Analog Inputs I/O Diagram	1	November 1999
I-2	Analog Outputs I/O Diagram	0	October 1999
I-3	AC Inputs Sheet 1 I/O Diagram	1	November 1999
I-4	AC Inputs Sheet 2 I/O Diagram	1	November 1999
I-5	AC Inputs Sheet 3 I/O Diagram	1	November 1999
I-6	Relay Outputs I/O Diagram	1	November 1999

Drawing No.	Title	Revision	Date
I-7	Main Control Panel Power Distribution	0	October 1999
I-8	Main Control Panel Front Panel Details	1	November 1999
I-9	Main Control Panel Rear Panel Details	1	November 1999
I-10	Main Control Panel I/O Base 1 and Gems Wiring	1	November 1999
I-11	Main Control Panel I/O Base 2 and Power Sup Wiring	1	November 1999
I-12	Main Control Panel Front Panel Wiring	1	November 1999
E-1	Electrical One Lie Diagram and MCC-300 Elevation	1	November 1999
E-2	Site Electrical Plan	1	November 1999
E-3	Building Power Plan	1	November 1999
E-4	Building Lighting Plan and Legend	0	October 1999
E-5	Building Grounding Plan	0	October 1999
E-6	Building Electrical Service	0	October 1999
E-7	Wellhouse Plan and Elevations and Details	0	October 1999
E-8	Elementary Diagrams - Well Pumps	1	November 1999
E-9	Elementary Diagrams - Stripper Feed Pumps	1	November 1999
E-10	Elementary Diagrams - Stripper Discharge Pumps	1	November 1999
E-11	Elementary Diagrams - Miscellaneous Motors	1	November 1999
E-12	Panel Schedules DP-301 and HT-302	1	November 1999
E-13	Cable Schedule - Power Cables	2	January 2000
E-14	Cable Schedule - Control Cables	1	November 1999
E-15	Cable Schedule - Instrument Cables	1	November 1999
E-16	Conduit Schedule Sheet 1	1	November 1999
E-17	Conduit Schedule Sheet 2	1	November 1999
E-18	Instrument Conduit Plan	1	November 1999
E-19	MCC-300 Interconnection Diagram	1	November 1999
E-20	Main Control Panel - Terminal Block Arrangement	1	November 1999

REVISIONS			
REV	DESCRIPTION	DATE	APPROVED
1	CHANGED TITLE OF P-5	11/22/99	JDM

U.S. DEPARTMENT OF ENERGY

IDAHO NATIONAL ENGINEERING & ENVIRONMENTAL LABORATORY

TEST AREA NORTH OU 1-07B

NEW PUMP & TREAT FACILITY (NPTF)

BUILDING TAN 1611

INDEX OF DRAWINGS

DRAWING NO.	TITLE
G-1	TITLE SHEET AND DRAWING INDEX
G-2	SITE LOCATION MAP
G-3	GENERAL LEGEND SHEET
G-4	PROCESS FLOW DIAGRAM
C-1	SITE LAYOUT PLAN
C-2	NPTF BUILDING AREA PAVING PLAN AND SECTIONS
C-3	WELLHOUSE PLAN AND DETAILS
A-0	ARCHITECTURAL LEGENDS AND GENERAL NOTES
A-1	BUILDING FLOOR AND FOUNDATION PLANS
A-2	BUILDING ELEVATIONS AND SECTIONS
A-3	BUILDING WALL SECTIONS
A-4	BUILDING FOUNDATION SECTIONS AND DETAILS
A-5	DOOR DETAILS
A-6	WELLHOUSE PLAN AND ELEVATIONS
A-7	WELLHOUSE SECTIONS AND DETAILS
H-1	HEATING AND VENTILATION LAYOUT PLAN
H-2	HEATING AND VENTILATION ELEVATIONS AND DETAILS
H-3	HEATING AND VENTILATION DIAGRAM AND DETAILS
P-1	PIPING AND INSTRUMENTATION DIAGRAM SHEET 1
P-2	PIPING AND INSTRUMENTATION DIAGRAM SHEET 2
P-3	YARD PIPING PLAN
P-4	PIPING EXPANSION LOOP AND DETAILS
1 P-5	PIPING DETAILS

DRAWING NO.	TITLE
P-6	EXTRACTION WELLHEAD PIPING AND DETAILS
P-7	WELLHEAD AND YARD PIPING DETAILS
P-8	INJECTION WELLHEAD PIPING
P-9	BUILDING PIPING ARRANGEMENT
P-10	BUILDING PIPING SECTIONS
P-11	BUILDING PIPING SECTIONS
P-12	HANGER DETAILS
P-13	HANGER DETAILS
P-14	EXTERIOR PIPING ENLARGED PLAN
P-15	SURGE TANK PLAN AND DETAILS
P-16	MISCELLANEOUS PIPING DETAILS
P-17	FW YARD PIPING AND DETAILS
P-18	PUMP SCHEDULE
I-1	ANALOG INPUTS I/O DIAGRAM
I-2	ANALOG OUTPUTS I/O DIAGRAM
I-3	AC INPUTS SHEET 1 I/O DIAGRAM
I-4	AC INPUTS SHEET 2 I/O DIAGRAM
I-5	AC INPUTS SHEET 3 I/O DIAGRAM
I-6	RELAY OUTPUTS I/O DIAGRAM
I-7	MAIN CONTROL PANEL POWER DISTRIBUTION
I-8	MAIN CONTROL PANEL FRONT PANEL DETAILS
I-9	MAIN CONTROL PANEL REAR PANEL DETAILS
I-10	MAIN CONTROL PANEL I/O BASE 1 AND GEMS WIRING

DRAWING NO.	TITLE
I-11	MAIN CONTROL PANEL I/O BASE 2 AND POWER SUP WIRING
I-12	MAIN CONTROL PANEL FRONT PANEL WIRING
E-1	ELECTRICAL ONE LINE DIAGRAM AND MCC-300 ELEVATION
E-2	SITE ELECTRICAL PLAN
E-3	BUILDING POWER PLAN
E-4	BUILDING LIGHTING PLAN AND LEGEND
E-5	BUILDING GROUNDING PLAN
E-6	BUILDING ELECTRICAL SERVICE
E-7	WELLHOUSE PLAN AND ELEVATIONS AND DETAILS
E-8	ELEMENTARY DIAGRAMS - WELL PUMPS
E-9	ELEMENTARY DIAGRAMS - STRIPPER FEED PUMPS
E-10	ELEMENTARY DIAGRAMS - STRIPPER DISCHARGE PUMPS
E-11	ELEMENTARY DIAGRAMS - MISCELLANEOUS MOTORS
E-12	PANEL SCHEDULES DP-301 AND HT-302
E-13	CABLE SCHEDULE - POWER CABLES
E-14	CABLE SCHEDULE - CONTROL CABLES
E-15	CABLE SCHEDULE - INSTRUMENT CABLES
E-16	CONDUIT SCHEDULE SHEET 1
E-17	CONDUIT SCHEDULE SHEET 2
E-18	INSTRUMENT CONDUIT PLAN
E-19	MCC-300 INTERCONNECTION DIAGRAM
E-20	MAIN CONTROL PANEL - TERMINAL BLOCK ARRANGEMENT

APPROVALS		DATE
CONST REV		
P.M.	J.R.	08/99
DES MGR	G.D.M.	08/99
DESIGN	W. S. L.	02/99
CHECKED	A.J.C.	07/99
DRAWN	W. S. L.	02/99
SUBCONTRACT NO.		
RELEASED		

PROJECT NO.S

DESIGN PHASE

FINAL DESIGN

APPROVED G.D.M. DATE 10/99

PARSONS

FOR U.S. DEPARTMENT OF ENERGY IDAHO OPERATIONS OFFICE IDAHO FALLS, IDAHO

TAN 1611

OU 1-07B NPTF

TITLE SHEET AND DRAWING INDEX

SIZE D | SCALE NONE | REV 1 | G-1

ADOCS NO.

NPTF G-1.DWG 11-22-99

REVISIONS			
REV	DESCRIPTION	DATE	APPROVED
1	Removed TAN-33	11/22/99	

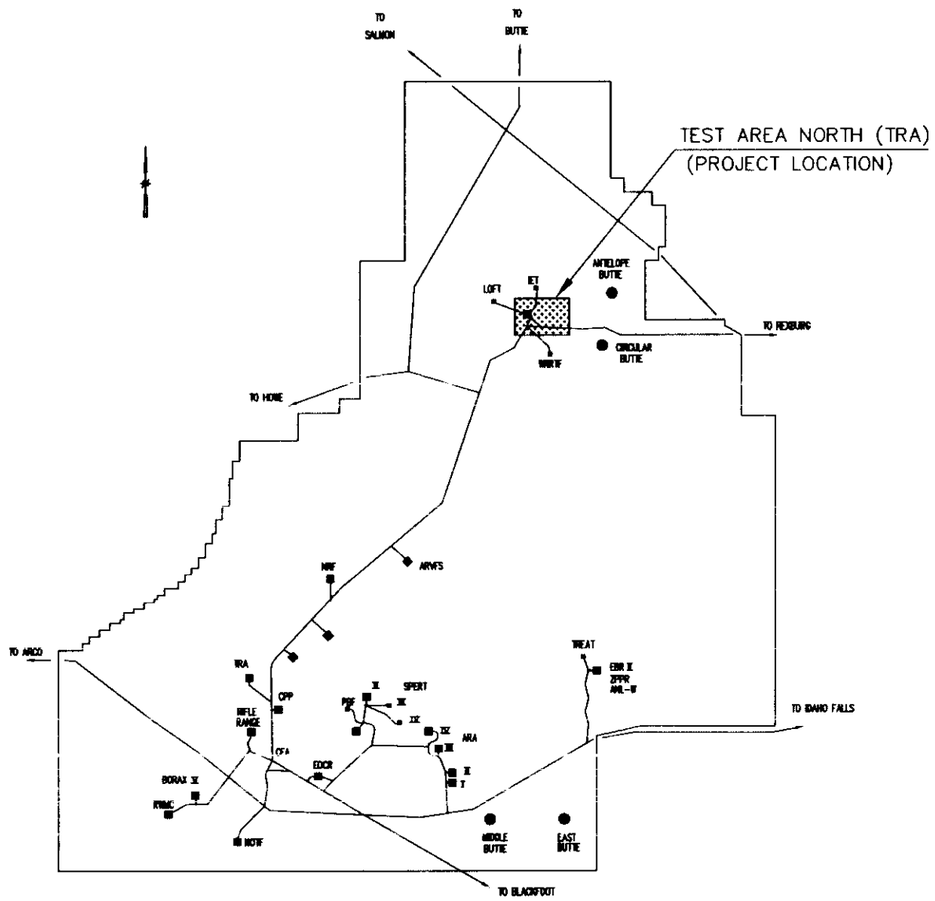

VICINITY MAP

NOT TO SCALE

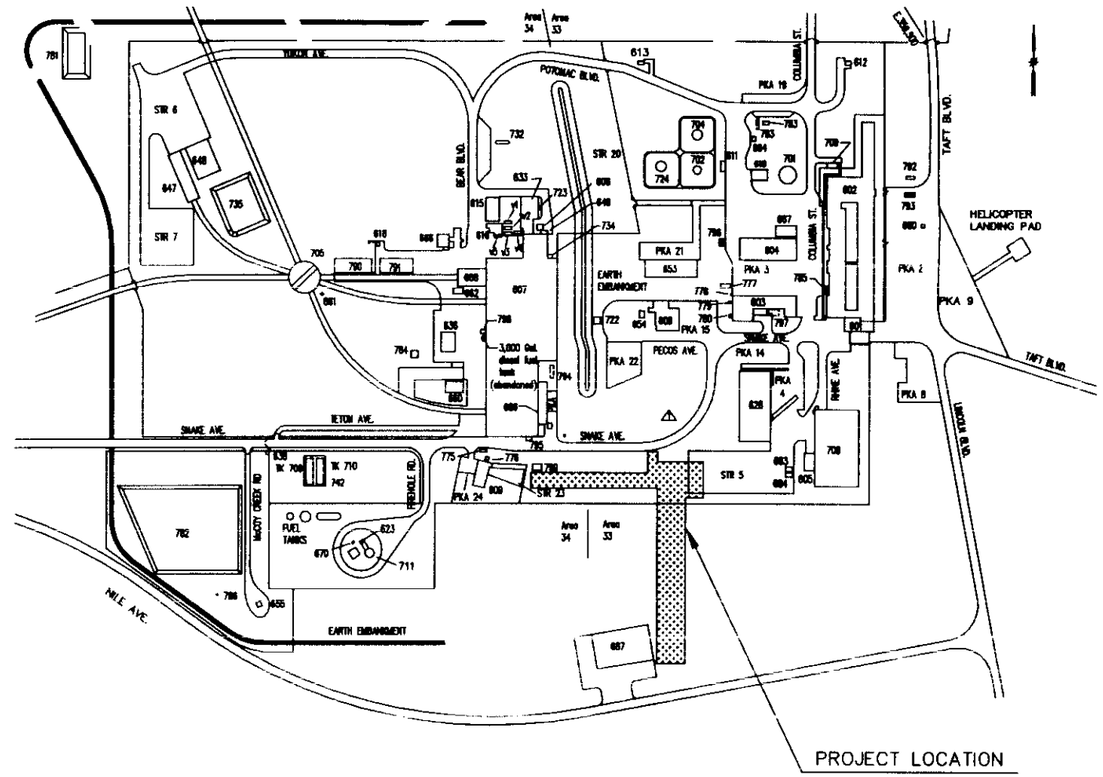

PROJECT LOCATION PLAN

SCALE: 1"=200'

PROJECT NO.S		APPROVALS	DATE
		CONST REV	
		P.M. J.R.	08/99
DESIGN PHASE		DES MGR G.D.M.	08/99
		DESIGN W. S. L.	02/99
FINAL DESIGN		CHECKED A.J.C.	07/99
		DRAWN W. S. L.	02/99
APPROVED	DATE	SUBCONTRACT NO.	
G.D.M.	10/99	RELEASED	

PARSONS

FOR U.S. DEPARTMENT OF ENERGY IDAHO OPERATIONS OFFICE IDAHO FALLS, IDAHO

OU 1-07B NPTF

SITE LOCATION MAP

SIZE	INDEX CODE NUMBER AREA	TYPE	CL	DWG	DRAWING NO.	REV	A/E DWG NO.
D						1	G-2
SCALE 1"=200'					INDEX CODE		

ADOCS NO. ____

NPTF G-2.DWG 11/22/99

REVISIONS			
REV	DESCRIPTION	DATE	APPROVED

PIPING SYMBOLS

- BUTTERFLY VALVE
- GLOBE VALVE
- BALL VALVE
- GATE VALVE
- THREE WAY VALVE
- CHECK VALVE
- MOTOR OPERATED VALVE
- SOLENOID OPERATED VALVE
- SAFETY RELIEF VALVE
- REDUCER
- FLOW ELEMENT
- HOSE CONNECTION
- VACUUM BREAKER

PIPING SYMBOLOGY

- PROCESS FLOW ARROW
- FLEXIBLE HOSE
- SP-X SAMPLE POINT

PIPE LINE DESIGNATIONS

CWW - CONTAMINATED WELL WATER
TW - TREATED WATER
FW - FIRE WATER
PW - POTABLE WATER

WELLHEAD SYMBOLOGY

- EXISTING EXTRACTION WELL
- EXISTING SAMPLING WELL

ELECTRICAL

- LEVEL SWITCH
- CLOSED CONTACT (BREAK)
- OPEN CONTACT (MAKE)
- THERMAL ELEMENT
- CIRCUIT BREAKER
- FUSE
- TRANSFORMER
- GROUND

EQUIPMENT SYMBOLS

- SP — SPECIALTY ITEM
- TANK
- PUMP
- M — PUMP (SUBMERGED)

HEATING/VENTILATION SYMBOLS

- UNIT HEATER
- T — WALL MOUNTED THERMOSTAT
- 8 — ROOF FAN
- STATIC PRESSURE CLASS CHANGE
- FLEXIBLE CONNECTION
- TRANSITION, FLANGED RECTANGULAR TO CIRCULAR
- STRAIGHTENING VANES
- POWER OR GRAVITY ROOF VENTILATOR - EXHAUST
- UH 356 — UNIT HEATER EQUIPMENT IDENTIFICATION
- PRV 357 — POWERED ROOF VENTILATOR EQUIPMENT IDENTIFICATION
- BR 310 — BLOWER EQUIPMENT IDENTIFICATION

INSTRUMENT DEVICE TAG TYPES

- XX 000 — IN-LINE TAG WITH LEADER LINE
- XX 000 — LOCAL MOUNTED DEVICE
- XX 000 — FRONT OF PANEL MOUNTED DEVICE
- HS 100 — HOA: SPECIAL DESIGNATION; HS: LETTERS OF INSTRUMENT DESIGNATION; 100: LOOP NUMBER
- PROGRAMMABLE CONTROLLER (PLC) INTERFACE W/ REFERENCED INSTRUMENTATION DRAWING

INSTRUMENT ACTUATOR LABELS

- M — MOTOR

INSTRUMENT IN-LINE DEVICES

- M — MAGNETIC FLOW METER
- PITOT TUBE FLOW METER

INSTRUMENT SIGNAL LINES

- CONNECT TO PROCESS
- ELECTRIC INSTRUMENT SIGNAL
- SOFTWARE LINK

IDENTIFICATION LETTERS

	FIRST-LETTER		SUCCEEDING-LETTERS		
	MEASURED OR INITIATING VARIABLE	MODIFIER	READOUT OR PASSIVE FUNCTION	OUTPUT FUNCTION	MODIFIER
A	ANALYSIS		ALARM		
B	BURNER, COMBUSTION		USER'S CHOICE	USER'S CHOICE	USER'S CHOICE
C	USER'S CHOICE (1)			CONTROL	
D	USER'S CHOICE (1)	DIFFERENTIAL (4)			
E	VOLTAGE		SENSOR (PRIMARY ELEMENT)		
F	FLOW RATE	RATIO (FRACTION) (4)			
G	USER'S CHOICE (1)		GLASS, VIEWING DEVICE		
H	HAND				HIGH
I	CURRENT (ELECTRICAL)		INDICATE		
J	POWER	SCAN (7)			
K	TIME, TIME SCHEDULE	TIME RATE OF CHANGE (4,21)		CONTROL STATION	
L	LEVEL		LIGHT		LOW
M	USER'S CHOICE (1)	MOMENTARY (4)			MIDDLE, INTERMEDIATE
N	USER'S CHOICE (1)		USER'S CHOICE	USER'S CHOICE	USER'S CHOICE
O	USER'S CHOICE (1)		ORIFICE (RESTRICTION)		
P	PRESSURE, VACUUM		POINT (TEST) CONNECTION		
Q	QUANTITY	INTEGRATE, TOTALIZE			
R	RADIATION		RECORD		
S	SPEED, FREQUENCY	SAFETY		SWITCH	
T	TEMPERATURE			TRANSMIT	
U	MULTIVARIABLE		MULTIFUNCTION	MULTIFUNCTION	MULTIFUNCTION
V	VIBRATION, MECHANICAL ANALYSIS			VALVE, DAMPER, LOUVER	
W	WEIGHT, FORCE		WELL		
X	UNCLASSIFIED	X AXIS	UNCLASSIFIED	UNCLASSIFIED	UNCLASSIFIED
Y	EVENT, STATE OR PRESENCE	Y AXIS			
Z	POSITION, DIMENSION	Z AXIS		DRIVER, ACTUATOR, UNCLASSIFIED FINAL CONTROL ELEMENT	

NOTE: THIS TABLE APPLIES ONLY TO THE FUNCTIONAL IDENTIFICATION OF INSTRUMENTS NUMBERS IN PARENTHESES REFER TO EXPLANATORY NOTES ON PAGES 15 AND 16 OF THE INSTRUMENT SOCIETY OF AMERICA AMERICAN NATIONAL STANDARD INSTRUMENTATION SYMBOLS AND IDENTIFICATION.

INSTRUMENT SPECIAL DESIGNATION	
DESIGNATION	FUNCTION / ABBREVIATION
HOA	HAND-OFF-AUTO
S/S	START-STOP
ESD	EMERGENCY SHUTDOWN

APPROVALS		DATE
CONST REV		
P.M.	J.R.	08/99
DES MGR	G.D.M.	08/99
DESIGN	M.J.J.	02/99
CHECKED	A.J.C.	07/99
DRAWN	M.J.J.	02/99
SUBCONTRACT NO.		
RELEASED		

PROJECT NO.'S
DESIGN PHASE
FINAL DESIGN
APPROVED DATE 1/4/99

PARSONS
FOR U.S. DEPARTMENT OF ENERGY IDAHO OPERATIONS OFFICE IDAHO FALLS, IDAHO

TAN 1611
OU 1-07B NPTF
GENERAL LEGEND SHEET

SIZE D | SCALE NONE | REV 0 | A/E DWG. NO. G-3

ADOCS NO.

NPTF-G-3.DWG 8-5-99 1:14 pm

REVISIONS			
REV	DESCRIPTION	DATE	APPROVED
1	REMOVED TAN-33	11/12/99	

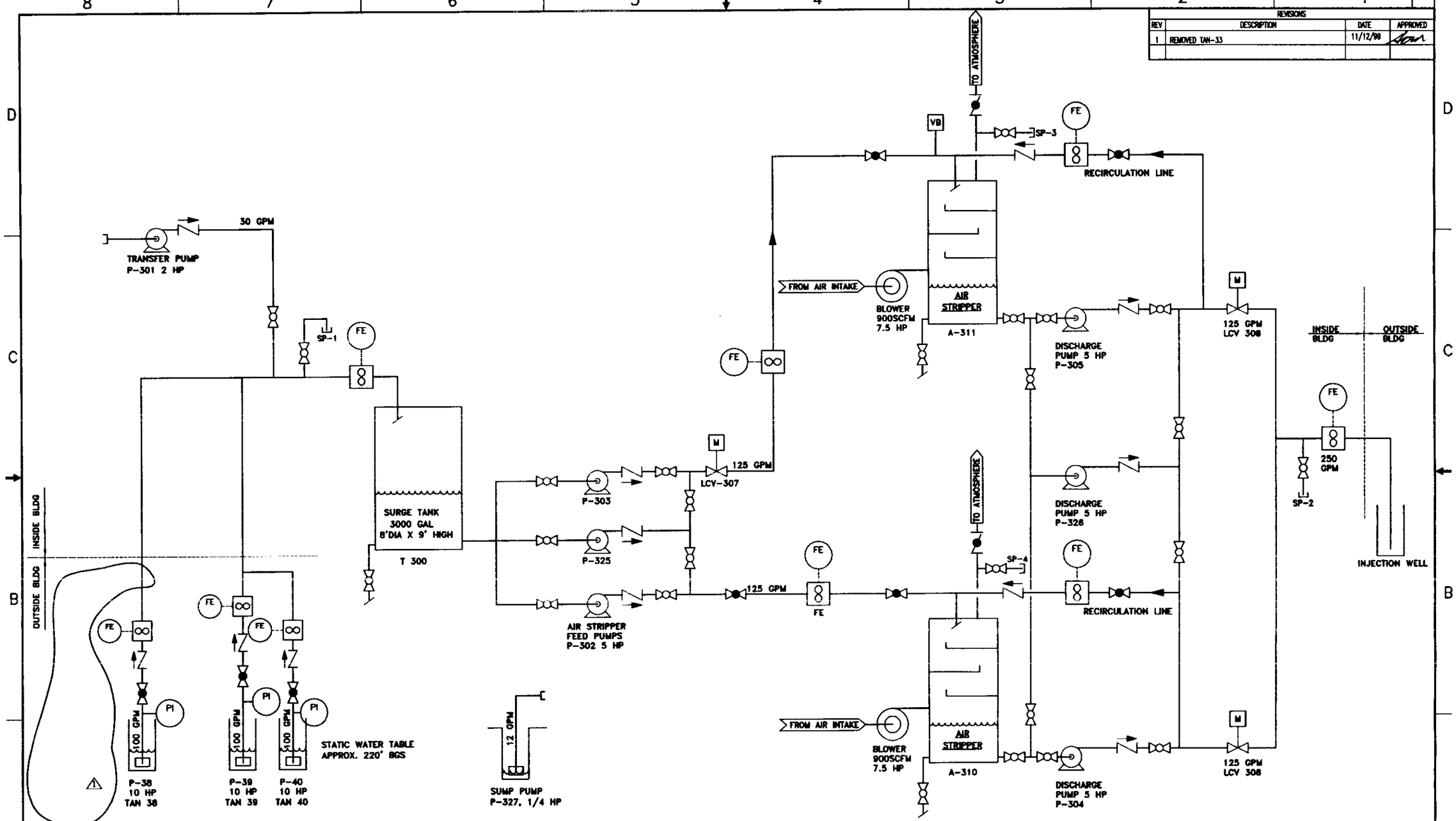

APPROVALS		DATE
CONST REV		
P.M.	J.S.R.	8/99
DES MGR	G.D.M.	8/99
DESIGN	A.J.C.	8/99
CHECKED	A.J.C.	8/99
DRAWN	M.J.J.	2/99
SUBCONTRACT NO.		
RELEASED		

PROJECT NO.S

DESIGN PHASE

FINAL DESIGN

APPROVED G.D.M. 10/99 DATE

PARSONS

U.S. DEPARTMENT OF ENERGY
IDAHO OPERATIONS OFFICE
IDAHO FALLS, IDAHO

TAN 1611

OU 1-07B NPTF
PROCESS FLOW DIAGRAM

SIZE D | SCALE NONE | REV 1 | A/E DWG. NO. G-4

ADOCS NO.

REVISIONS			
REV	DESCRIPTION	DATE	APPROVED
1	GENERAL REVISION	11/3/99	

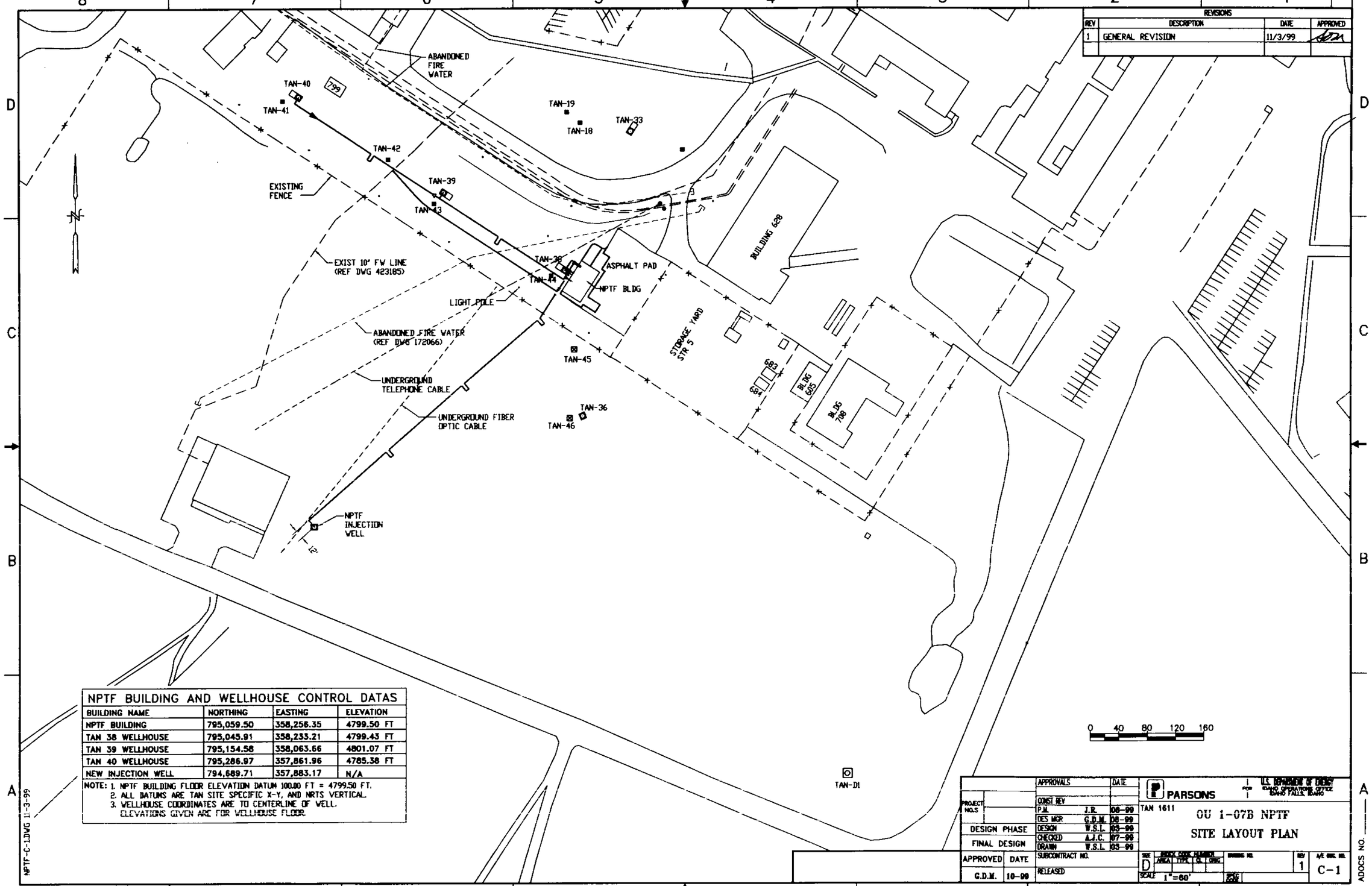

NPTF BUILDING AND WELLHOUSE CONTROL DATAS			
BUILDING NAME	NORTHING	EASTING	ELEVATION
NPTF BUILDING	795,059.50	358,256.35	4799.50 FT
TAN 38 WELLHOUSE	795,045.91	358,233.21	4799.43 FT
TAN 39 WELLHOUSE	795,154.58	358,063.66	4801.07 FT
TAN 40 WELLHOUSE	795,286.97	357,861.96	4785.38 FT
NEW INJECTION WELL	794,689.71	357,883.17	N/A

NOTE: 1. NPTF BUILDING FLOOR ELEVATION DATUM 100.00 FT = 4799.50 FT.
2. ALL DATUMS ARE TAN SITE SPECIFIC X-Y, AND NRTS VERTICAL.
3. WELLHOUSE COORDINATES ARE TO CENTERLINE OF WELL. ELEVATIONS GIVEN ARE FOR WELLHOUSE FLOOR.

NPTF-C-1.DWG 11-3-99

APPROVALS		DATE
CONST REV		
P.M.	J.R.	08-99
DES MGR	G.D.M.	08-99
DESIGN	W.S.L.	03-99
CHECKED	A.J.C.	07-99
DRAWN	W.S.L.	03-99
SUBCONTRACT NO.		
RELEASED		

PROJECT NO.S

DESIGN PHASE

FINAL DESIGN

APPROVED	DATE
G.D.M.	10-99

PARSONS

U.S. DEPARTMENT OF ENERGY
IDAHO OPERATIONS OFFICE
IDAHO FALLS, IDAHO

TAN 1611

OU 1-07B NPTF SITE LAYOUT PLAN

SIZE D | INDEX CODE NUMBER: AREA | TYPE | CL | DWG | DRAWING NO. | REV 1 | A/E DWG. NO. C-1

SCALE 1"=60'

ADOCS NO.

REVISIONS			
REV	DESCRIPTION	DATE	APPROVED
1	GENERAL REVISION	11/4/99	

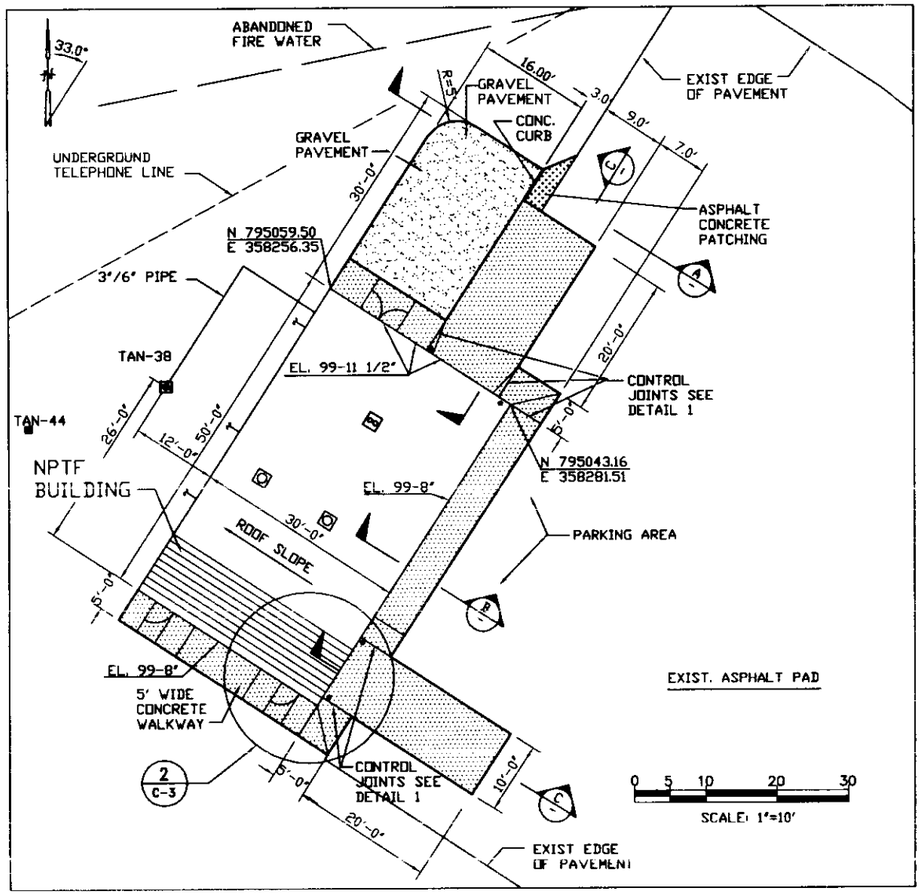

NPTF BUILDING AND SITE PLAN
SCALE : 1"=10'

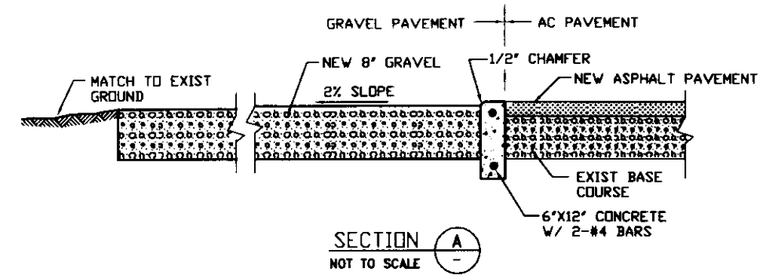

SECTION A
NOT TO SCALE

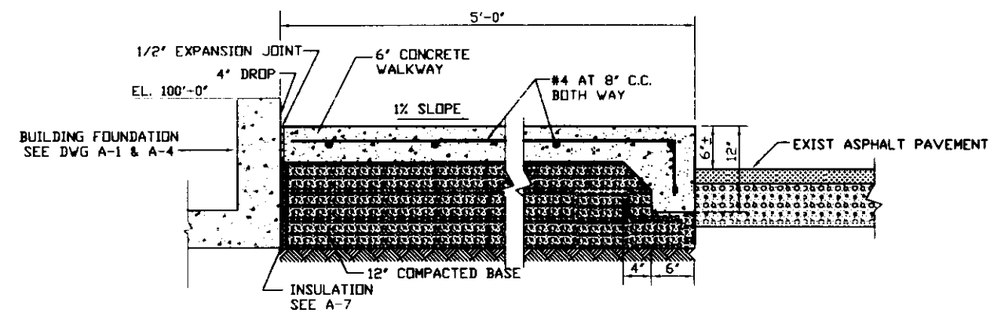

SECTION B
NOT TO SCALE

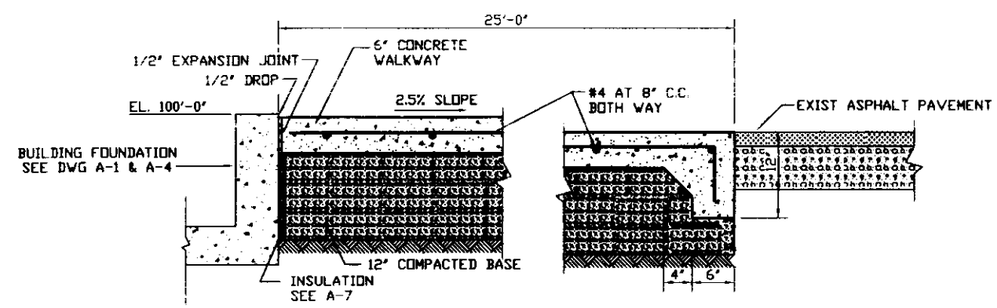

SECTION C
NOT TO SCALE

NOTE:
SEE C-1 FOR ELEVATION CONTROL INFORMATION.

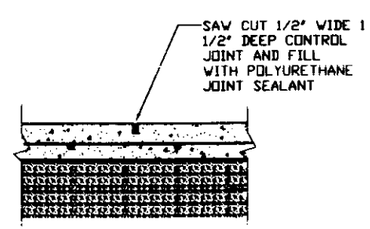

DETAIL 1
CONTROL JOINT

		APPROVALS		DATE
PROJECT NOTE		CONST REV		
		P.M.	J.R.	06-99
		DES MGR	G.D.M.	06-99
DESIGN PHASE		DESIGN	W.S.L.	06-99
FINAL DESIGN		CHECKED	A.J.C.	06-99
		DRAWN	W.S.L.	03-99
APPROVED	DATE	SUBCONTRACT NO.		
G.D.M.	10-99	RELEASED		

PARSONS

FOR US DEPARTMENT OF ENERGY IDAHO OPERATIONS OFFICE IDAHO FALLS, IDAHO

TAN 1611

OU 1-07B NPTF
NPTF BUILDING AREA
PAVING PLAN AND SECTIONS

SIZE D | SCALE AS SHOWN | REV 1 | A/E DWG. NO. C-2

ADOCS NO.

NPTF-C-2.DWG 11/4/99

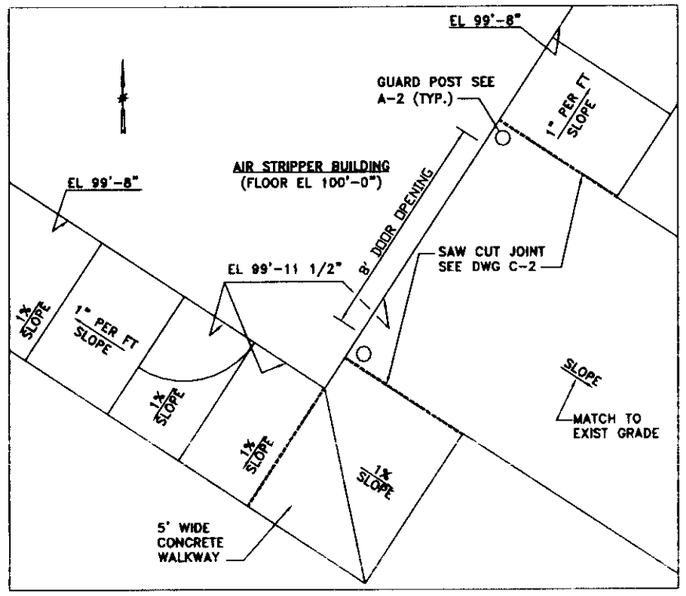

WALKWAY ENLARGED PLAN 2/C-2

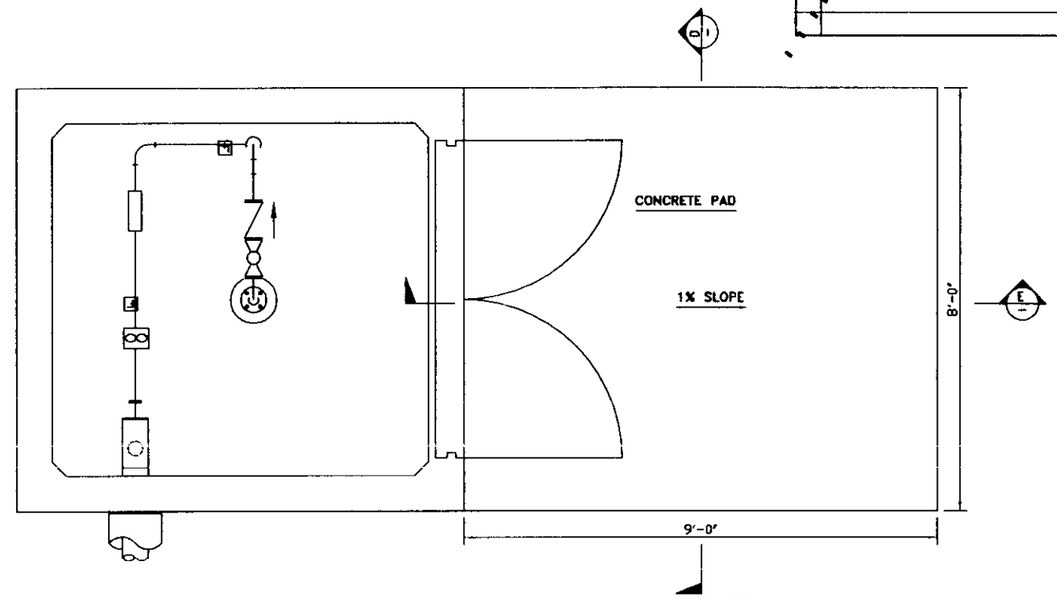

WELLHOUSE AND CONCRETE PAD LAYOUT PLAN 2/C-2
FOR ORIENTATION SEE P-3, P-6, AND P-7

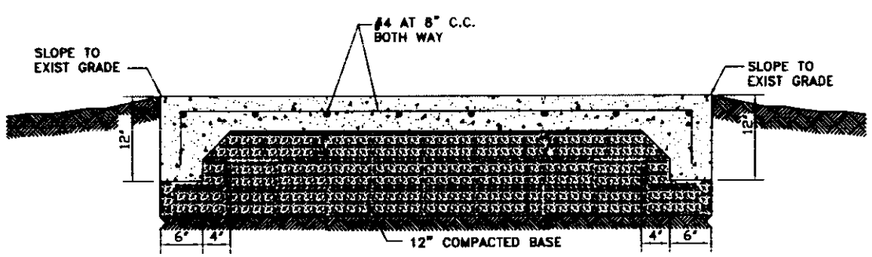

SECTION D/-
NOT TO SCALE

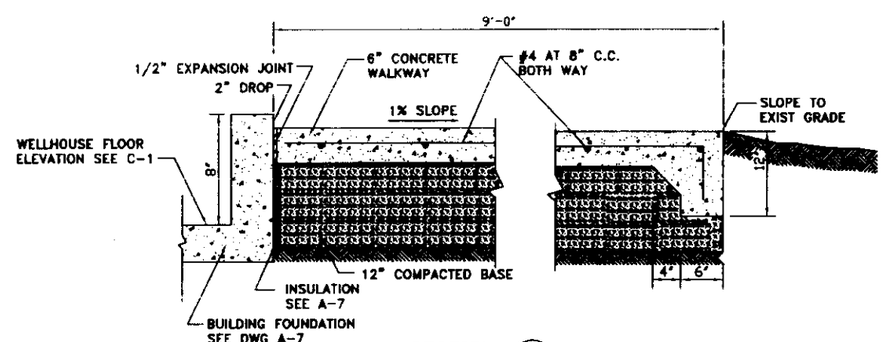

SECTION E/-
NOT TO SCALE

NOTE:
FOR WELLHOUSE FLOOR ELEEVATION SEE C-1

REVISIONS			
REV	DESCRIPTION	DATE	APPROVED

PROJECT NO.S	APPROVALS		DATE
	CONST REV		
	P.M.	J.R.	08-99
	DES MGR	G.D.M	08-99
DESIGN PHASE	DESIGN	W.S.L.	08-99
	CHECKED	A.J.C	08-99
FINAL DESIGN	DRAWN	W.S.L.	03-99
APPROVED / DATE	SUBCONTRACT NO.		
Stan 10/5/99	RELEASED		

PARSONS — FOR U.S. DEPARTMENT OF ENERGY, IDAHO OPERATIONS OFFICE, IDAHO FALLS, IDAHO

TAN 1611 OU 1-07B NPTF
WELLHOUSE
PLAN AND DETAILS

SIZE D — INDEX CODE NUMBER: AREA / TYPE / CL / CHRO — DRAWING NO. — REV 0 — A/E DWG. NO. C-3
SCALE 1/4"=1' — SPEC CODE

NPTF-C-3.DWG 8-4-99 1:35 PM

ADOCS NO.

REVISIONS			
REV	DESCRIPTION	DATE	APPROVED

SYMBOL KEY

- A / A-1 — SECTION LETTER / A/E SHEET REFERENCE
- A / A-1 — VIEW OR ELEVATION LETTER / A/E SHEET REFERENCE
- PH-1 / A-1 — PHOTO NUMBER / A/E SHEET REFERENCE
- 1 / – — DETAIL NUMBER / SAME SHEET REFERENCE
- 1 — DOOR MARK NUMBER
- 1 / A — COLUMN LINES

MATERIALS

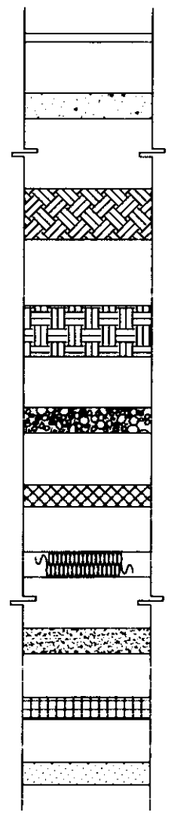

- NEW ITEMS
- CONCRETE
- UNDISTURBED EARTH
- COMPACTED BACKFILL/EARTH
- 12" MIN COMPACTED BASE
- RIGID INSULATION
- BATT INSULATION
- SAND
- ACCOUSTICAL BOARD/PANEL
- GYPSUM BOARD

ABBREVIATIONS

AB	– ANCHOR BOLT
AE	– ARCHITECTURAL ENGINEERING
AFF	– ABOVE FINISHED FLOOR
AMB	– AMBULANCE
CAL	– CALIPER
CLG	– CEILING
℄	– CENTERLINE
CMP	– CORRUGATED METAL PIPE
CONC	– CONCRETE
CONT	– CONTINUOUS
CSPA	– CORRUGATED STEEL PIPE ARCH
DP	– DEPTH
DES	– DESIGN
DET	– DETAIL
DIA, Ø	– DIAMETER
DWG	– DRAWING
EA	– EACH
EF	– EACH FACE
EL	– ELEVATION
EMT	– ELECTRICAL METALLIC TUBING
EQ SP	– EQUAL SPACED
ES	– EACH SIDE
EW	– EACH WAY
EXIST.	– EXISTING
EXT	– EXTERIOR
FF	– FINISH FLOOR
FH	– FIRE HYDRANT
FIN.	– FINISH
FIN. GRD	– FINISHED GRADE
FLR	– FLOOR
F.O. CONC.	FACE OF CONCRETE
F.O.F.	– FACE OF FRAME
FT	– FOOT/FEET
GA	– GAUGE
GAL	– GALLON
GYP BD	– GYPSUM BOARD
HT	– HEIGHT
IN.	– INCH/INCHES
INSUL	– INSULATION
INT	– INTERIOR
LG	– LENGTH
MATL	– MATERIAL
MAX	– MAXIMUM
MGR	– MANAGER
MFR	– MANUFACTURER
MH	– MANHOLE
MIN	– MINIMUM
MO	– MASONRY OPENING
NG	– NATURAL GAS
NIC	– NOT IN CONTRACT
NO.	– NUMBER
NOM	– NOMINAL
PIV	– POST INDICATOR VALVE
OC	– ON CENTER
OH	– OVER HEAD
OPNG	– OPENING
PSI	– POUND PER SQUARE INCH
PSF	– POUND PER SQUARE FOOT
PLCS	– PLACES
PL	– PLATE
PM	– PROJECT MANAGER
REQD	– REQUIRED
REV	– REVISION
SEC	– SECTION
SHT	– SHEET
SPEC	– SPECIFICATION
STD	– STANDARD
TOC	– TOP OF CONCRETE
TOS	– TOP OF STEEL
TYP	– TYPICAL
UN	– UNLESS NOTED OTHERWISWE
UV	– UNDERGROUND VALVE
WD	– WIDTH

GENERAL NOTES

1. ALL TAN-1611 BUILDING CLEARANCES & DIMENSIONS ARE BASED ON GENERIC METAL BUILDING SYSTEMS DESIGN. GENERAL SUBCONTRACTOR & METAL BUILDING SYSTEMS MANUFACTURER SHALL VERIFY AND ADJUST ALL CLEARANCES AND DIMENSIONS SHOWN AS REQUIRED FOR INSTALLATION OF BUILDING SYSTEM MANUFACTURER'S STANDARD COMPONENTS IN COORDINATION WITH OTHER SYSTEMS.
2. PROVIDE STRUCTURAL DESIGN FOR REINFORCED CONCRETE FOUNDATION TO SUPPORT METAL BUILDING SYSTEM, EXCEPT AS SHOWN. INCLUDE DESIGN OF STRUCTURAL CONCRETE & REINFORCEMENTS, INCLUDING SIZES & DIMENSIONS, FOR COLUMN PIERS, GRADE BEAMS, FOOTINGS, ANCHORAGES, AND OTHER CONDITIONS REQUIRED FOR COMPLETE STRUCTURE.
3. SUBMIT FOOTING SCHEDULE, ANCHOR BOLT PLACEMENT & EMBEDMENT, DEPTH PLAN, AND CALCULATIONS AFTER VERIFYING FINAL BUILDING LOADS. SUBMITTALS SHALL BE SIGNED & SEALED BY REGISTERED PROFESSIONAL ENGINEER FROM STATE OF IDAHO.
4. UNLESS INDICATED OTHERWISE, ALL DIMENSIONS ARE SHOWN TO FACE OF FRAME OR FACE OF CONCRETE.
5. PROVIDE MINIMUM 12" DEEP COMPACTED BASE COURSE ON UNDISTURBED EARTH UNDER ASPHALT CONCRETE PATCHING & CAST-IN-PLACE CONCRETE, TYPICAL UNLESS INDICATED OTHERWISE.

DESIGN DATA

GOVERNING BUILDING CODES:

ARCHITECTURAL:	UNIFORM BUILDING CODE, 1997 EDITION
MECHANICAL:	UNIFORM MECHANICAL CODES
STRUCTURAL:	CONCRETE – ACI 318-89
	STEEL – AISC MANUAL OF PRACTICE, 9TH EDITION
UBC OCCUPANCY:	NPTF BUILDING F-2
	WELLHOUSES F-2
UBC CONSTRUCTION TYPE:	NPTF BUILDING TYPE II-N
	WELLHOUSES TYPE II-N
GROSS SQ FOOTAGE:	PUMPHOUSES 1500 GSF
	WELLHOUSE, EA. 68 GSF
DESIGN LOADS:	SNOW – 30 PSF
	COLLATERAL – 15 PSF (ALL AREAS)
	WIND – PER ASCE 7-93 EXPOSURE "C", 70 MPH, I=1.07
UBC SEISMIC ZONE:	ZONE 2B, I=1.00
REINFORCING STEEL:	ASTM A615 GRADE 60
CONCRETE:	CLASS 20 2000 PSI: CONDUIT ENCASEMENT
	CLASS 25 2500 PSI: OVER-DEPTH EXCAVATION FILL
	CLASS 30 3000 PSI: SIDEWALKS, PAVING & OUTSIDE SLABS
	CLASS 40 4000 PSI: FOUNDATIONS, BUILDING SLABS, GUARD POSTS, THRUST BLOCKS & ALL OTHER PLACEMENTS
ASSUMED ALLOWABLE SOIL BEARING PRESSURE: (FOR 1 FT WIDTH & 1 FT BELOW GRADE)	2000 PSF

PROJECT NO.S		APPROVALS	DATE
		CONST REV	
		P.M. J.R.	8-99
		DES MGR G.D.M.	8-99
DESIGN PHASE		DESIGN S. [redacted]	2-99
		CHECKED G.D.M.	2-99
FINAL DESIGN		DRAWN BUBBA	2-99
APPROVED	DATE	SUBCONTRACT NO.	
	10/5/99	RELEASED	

PARSONS

FOR U.S. DEPARTMENT OF ENERGY IDAHO OPERATIONS OFFICE IDAHO FALLS, IDAHO

TAN-1611

OU 1-07B NPTF
ARCHITECTURAL LEGENDS & GENERAL NOTES

SIZE D | SCALE NONE | REV 0 | A/E DWG. NO. A-0

ADOCS NO.

NPTF A-0.DWG 9-4-99 5:00 PM

REVISIONS			
REV	DESCRIPTION	DATE	APPROVED
1	REVISED ROOM FINISH SCHEDULE	11/22/99	

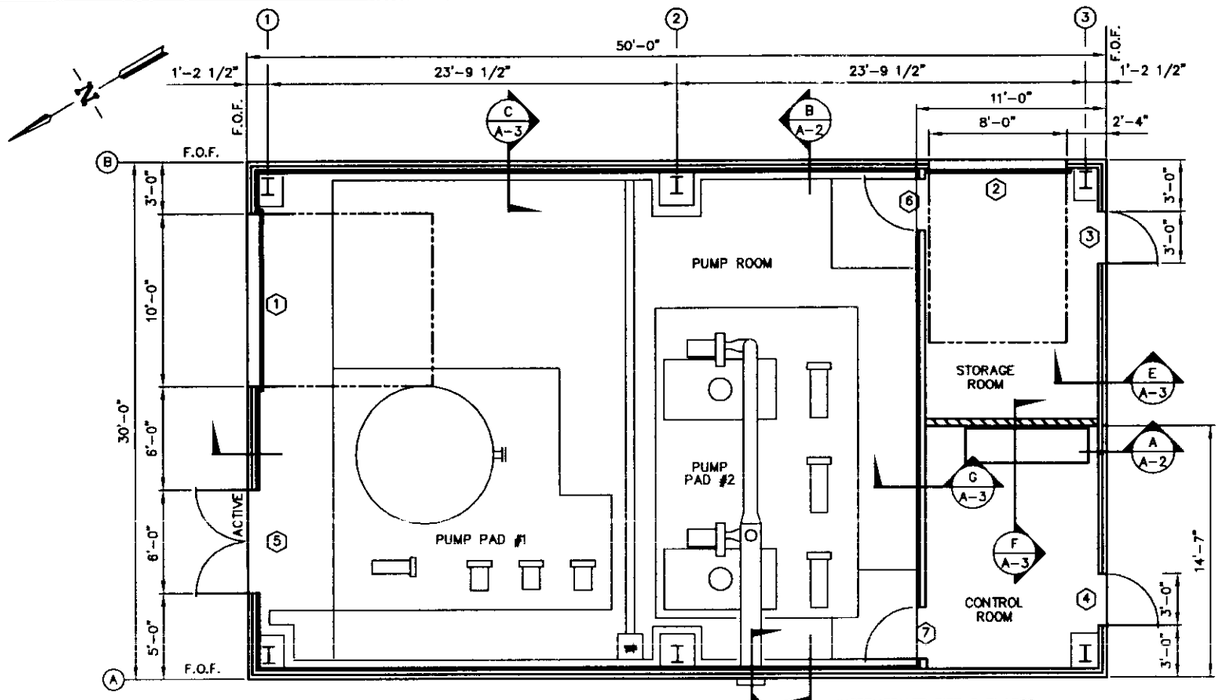

FLOOR PLAN

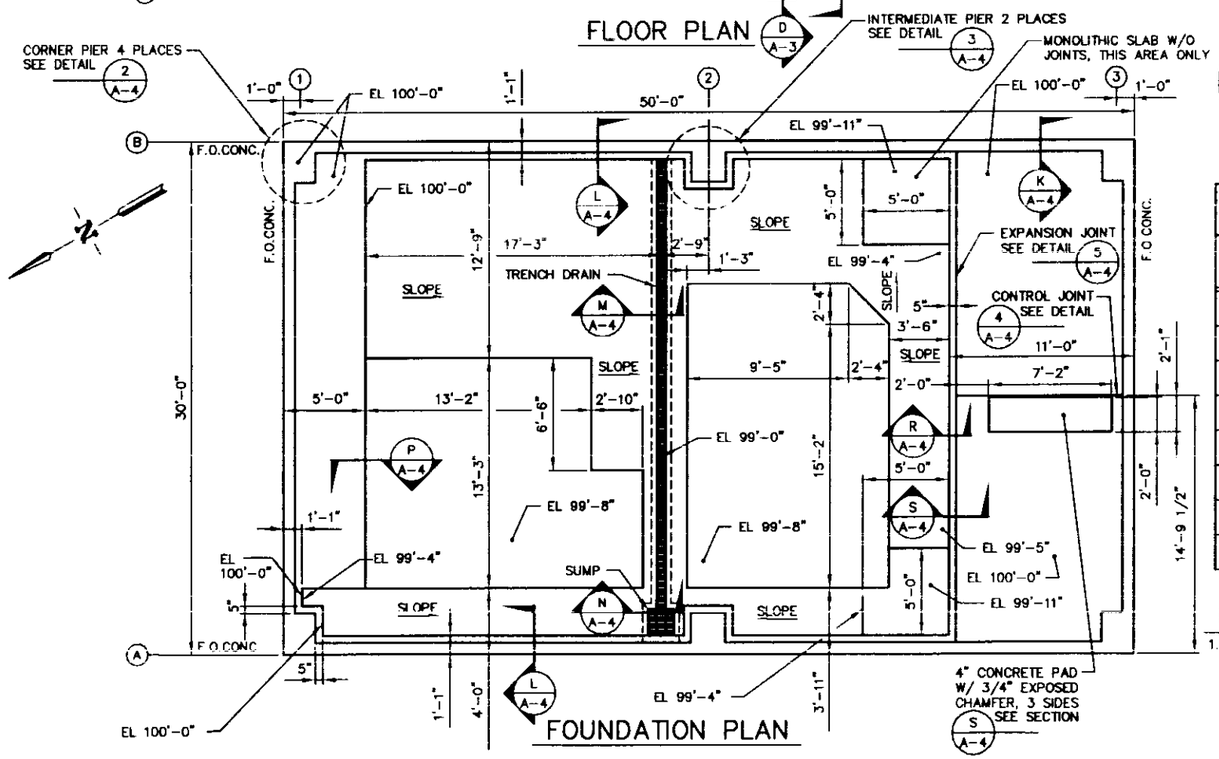

FOUNDATION PLAN

WALL SCHEDULE

PLAN SYMBOL	DESCRIPTION	PLAN DETAIL
	PERIMETER METAL BLDG WALL: EXTERIOR METAL BLDG PANELS ON OUTSIDE AND 2" ACOUSTICAL PANELS ON INSIDE WITH BLDG INSULATION IN BETWEEN	3" BATT INSULATED EXTERIOR METAL BLDG PANEL 2 1/2" RIGID BLDG INSULATION 2" ACOUSTICAL BD FASTENED TO BLDG PANELS
	PERIMETER METAL BLDG WALL: EXTERIOR METAL BLDG PANELS ON OUTSIDE AND 5/8" GYP BD ON INSIDE WITH BLDG INSULATION IN BETWEEN	3" BATT INSULATED EXTERIOR METAL BLDG PANEL 2 1/2" RIGID BLDG INSULATION 5/8" PAINTED GYP BD FASTENED TO BLDG PANELS
	INTERIOR PARTITION WALL: 3 1/2" METAL STUDS AT 24" O.C. WITH 2" ACOUSTICAL PANELS ON PUMP ROOM SIDE AND 5/8" GYP BD ON OTHER SIDE	5/8" PAINTED GYP BD & RESILIENT BASE 3 1/2" STEEL STUDS AT 24" O.C. AND ACOUSTICAL INSULATION TO CEILING ABOVE 2" ACOUSTICAL BD FASTENED TO STUD FRAMING
	INTERIOR PARTITION WALL: 3 1/2" STEEL STUDS WITH 5/8" GYP BD BOTH SIDES	5/8" PAINTED GYP BD & RESILIENT BASE EA SIDE 3 1/2" STEEL STUDS AT 24" O.C. TO CEILING ABOVE

ROOM FINISH SCHEDULE

ROOM NAME	FLOOR: FLOOR COATING	FLOOR: CONCRETE SEALER	FLOOR: PAINT	BASE: RESILIENT	BASE: NONE	NORTH WALL: FLOOR COATING	NORTH WALL: GYPSUM BD.	NORTH WALL: INSUL FIN BD, LT DUTY	NORTH WALL: INSUL FIN BD, HVY DUTY	NORTH WALL: ACOUSTICAL BD	NORTH WALL: PAINT	WEST WALL: GYPSUM BD.	WEST WALL: INSUL FIN BD, LT DUTY	WEST WALL: INSUL FIN BD, HVY DUTY	WEST WALL: ACOUSTICAL BD	WEST WALL: PAINT	SOUTH WALL: GYPSUM BD.	SOUTH WALL: INSUL FIN BD, LT DUTY	SOUTH WALL: INSUL FIN BD, HVY DUTY	SOUTH WALL: ACOUSTICAL BD	SOUTH WALL: PAINT	EAST WALL: GYPSUM BD.	EAST WALL: INSUL FIN BD, LT DUTY	EAST WALL: INSUL FIN BD, HVY DUTY	EAST WALL: ACOUSTICAL BD	EAST WALL: PAINT	CEILING: INSUL FIN BD, LT DUTY	CEILING: INSUL FIN BD, HVY DUTY	CEILING: ACOUSTICAL BD	REMARKS
PUMP ROOM	•					•				•					•					•					•				•	PAINT COLOR #SW1683
STORAGE ROOM	•			•			•					•	•				•	•				•	•				•			PAINT COLOR #SW1683
ELEC ROOM	•			•			•					•	•				•	•				•	•				•			
WELLHOUSE (TAN-38)	•					•		•						•					•				•				•			
WELLHOUSE (TAN-39)	•					•		•						•					•				•				•			
WELLHOUSE (TAN-40)	•					•		•						•					•				•				•			

DOOR SCHEDULE

MARK	NOMINAL SIZE	TYPE	HDWE GROUP	DOOR: MAT.	DOOR: CORE	DOOR: FINISH	FRAME: MAT.	FRAME: FINISH	DETAILS: HEAD	DETAILS: JAMB	DETAILS: SILL	GLASS TYPE	U.L. LABEL	REMARKS
1	10' X 10'	A	—	STEEL	INSUL	FACTORY	HOLLOW METAL	PAINTED	10/A-5	11/A-5	—	INSULATING SAFETY	—	SECTIONAL DOOR
2	8' X 10'	B	—	STEEL	INSUL	FACTORY	HOLLOW METAL	PAINTED	10/A-5	11/A-5	—	INSULATING SAFETY	—	SECTIONAL DOOR
3	3' X 6'	C	1	HOLLOW METAL	INSUL	PAINTED	HOLLOW METAL	PAINTED	8/A-5	9/A-5	14/A-5	INSULATING SAFETY	—	BY BLDG SYS MFR
4	3' X 6'	C	1	HOLLOW METAL	INSUL	PAINTED	HOLLOW METAL	PAINTED	8/A-5	9/A-5	14/A-5	INSULATING SAFETY	—	BY BLDG SYS MFR
5	6' X 6'	D	2	HOLLOW METAL	INSUL	PAINTED	HOLLOW METAL	PAINTED	8/A-5	9/A-5	14/A-5	INSULATING SAFETY	—	BY BLDG SYS MFR
6	3' X 6'	E	1	HOLLOW METAL	—	PAINTED	HOLLOW METAL	PAINTED	8/A-5	7/A-5	13/A-5	SAFETY	—	
7	3' X 6'	E	3	HOLLOW METAL	—	PAINTED	HOLLOW METAL	PAINTED	8/A-5	7/A-5	13/A-5	SAFETY	—	
8	6' X 6'	F	2	HOLLOW METAL	INSUL	PAINTED	HOLLOW METAL	PAINTED	SEE SHEETS A-6 AND A-7			NONE	—	24" SQ LOUVER

NOTES

1. BUILDING MANUFACTURER TO SUPPLY ADDITIONAL ROOF FRAMING AS REQUIRED TO ALLOW FOR PIPE HANGARS. SEE PIPING DRAWINGS FOR LOCATIONS.

		APPROVALS	DATE
PROJECT NO.S		CONST REV	
		P.M. G. MECHAM	2-99
		DES MGR S. SHEPHERD	2-99
DESIGN PHASE		DESIGN R.JOHNSON	2-99
FINAL DESIGN		CHECKED G.D.M.	8-99
		DRAWN K.B.	2-99
APPROVED	DATE	SUBCONTRACT NO.	
G.D.M.	10/99	RELEASED	

PARSONS

U.S. DEPARTMENT OF ENERGY IDAHO OPERATIONS OFFICE IDAHO FALLS, IDAHO

TAN-1611

OU 1-07B NPTF

NPTF BUILDING

FLOOR AND FOUNDATION PLANS

SIZE D | SCALE 1/4"=1' | REV 1 | A/E DWG. NO. A-1

ADOCS NO.

User: TULLO Date: 03/17/99 - 10:33 A.M.

File: 3625-1.dwg Path: P:\1878-NJOHNSON

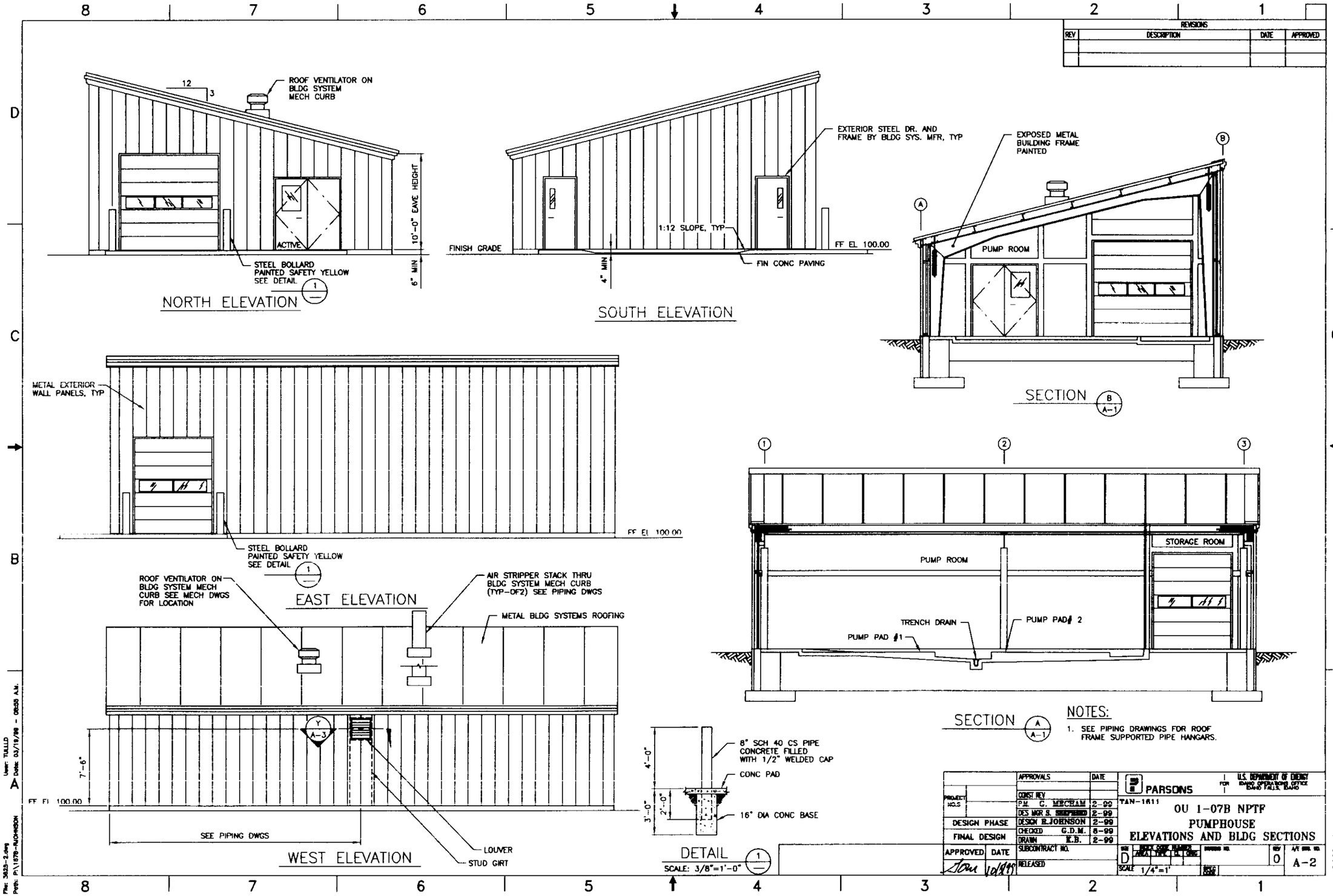

REVISIONS
REV
DESCRIPTION
DATE
APPROVED
ROOF VENTILATOR ON BLDG SYSTEM MECH CURB
12
3
10'-0" EAVE HEIGHT
6" MIN
ACTIVE
STEEL BOLLARD PAINTED SAFETY YELLOW SEE DETAIL 1
NORTH ELEVATION
EXTERIOR STEEL DR. AND FRAME BY BLDG SYS. MFR, TYP
1:12 SLOPE, TYP
FINISH GRADE
FF EL 100.00
4" MIN
FIN CONC PAVING
SOUTH ELEVATION
EXPOSED METAL BUILDING FRAME PAINTED
PUMP ROOM
SECTION B A-1
METAL EXTERIOR WALL PANELS, TYP
FF EL 100.00
STEEL BOLLARD PAINTED SAFETY YELLOW SEE DETAIL 1
EAST ELEVATION
ROOF VENTILATOR ON BLDG SYSTEM MECH CURB SEE MECH DWGS FOR LOCATION
AIR STRIPPER STACK THRU BLDG SYSTEM MECH CURB (TYP-OF2) SEE PIPING DWGS
METAL BLDG SYSTEMS ROOFING
7'-6"
FF EL 100.00
SEE PIPING DWGS
LOUVER
STUD GIRT
WEST ELEVATION
8" SCH 40 CS PIPE CONCRETE FILLED WITH 1/2" WELDED CAP
CONC PAD
16" DIA CONC BASE
4'-0"
2'-0"
3'-0"
DETAIL 1
SCALE: 3/8"=1'-0"
STORAGE ROOM
PUMP ROOM
TRENCH DRAIN
PUMP PAD #1
PUMP PAD# 2
SECTION A A-1
NOTES:
1. SEE PIPING DRAWINGS FOR ROOF FRAME SUPPORTED PIPE HANGARS.
APPROVALS
DATE
CONST REV
P.M. G. MECHAM 2-99
DES MGR S. SHEPHERD 2-99
DESIGN R.JOHNSON 2-99
CHECKED G.D.M. 8-99
DRAWN K.B. 2-99
SUBCONTRACT NO.
RELEASED
PROJECT NO.S
DESIGN PHASE
FINAL DESIGN
APPROVED
DATE
PARSONS
FOR
U.S. DEPARTMENT OF ENERGY IDAHO OPERATIONS OFFICE IDAHO FALLS, IDAHO
TAN-1611
OU 1-07B NPTF
PUMPHOUSE
ELEVATIONS AND BLDG SECTIONS
SIZE D
SCALE 1/4"=1'
REV 0
A-2
ADOCS NO.

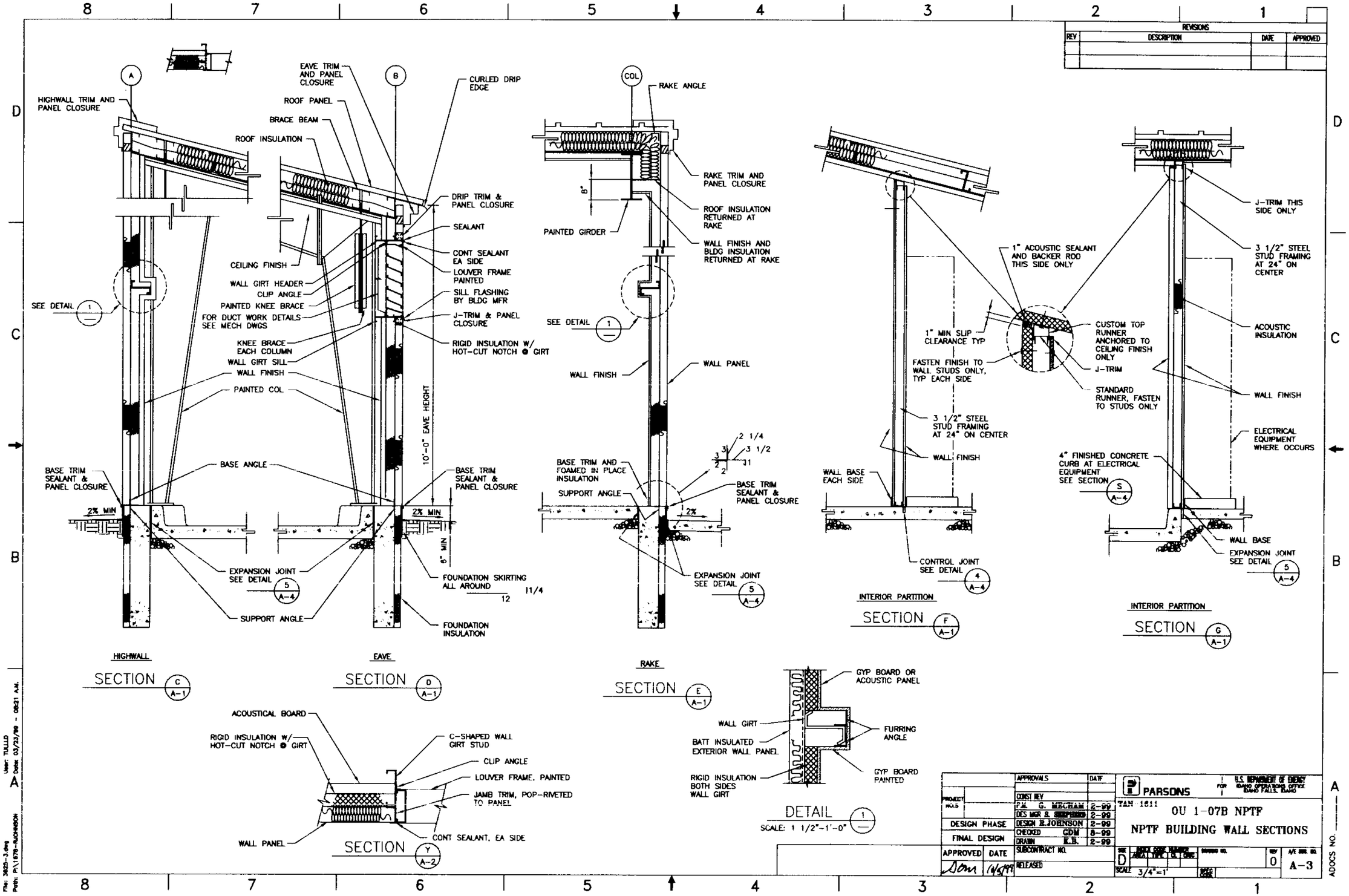

REVISIONS			
REV	DESCRIPTION	DATE	APPROVED

PROJECT NO.S	APPROVALS	DATE
	CONST REV	
	P.M. G. MECHAM	2-99
	DES MGR S. [illegible]	2-99
DESIGN PHASE	DESIGN R.JOHNSON	2-99
FINAL DESIGN	CHECKED GDM	8-99
	DRAWN K.B.	2-99
APPROVED / DATE	SUBCONTRACT NO.	
Dom 10/5/99	RELEASED	

PARSONS — U.S. DEPARTMENT OF ENERGY, IDAHO OPERATIONS OFFICE, IDAHO FALLS, IDAHO

TAN 1611

OU 1-07B NPTF

NPTF BUILDING WALL SECTIONS

SIZE D — SCALE 3/4"=1' — REV 0 — A/E DWG. NO. A-3

ADOCS NO.

File: 3625-3.dwg
Path: P:\1676-RJOHNSON
User: TULLLD
Date: 03/23/99 - 08:21 A.M.

REVISIONS			
REV	DESCRIPTION	DATE	APPROVED

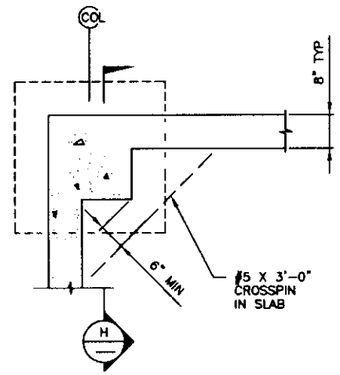

TYPICAL CORNER PIER

DETAIL 2 / A-1

NTS

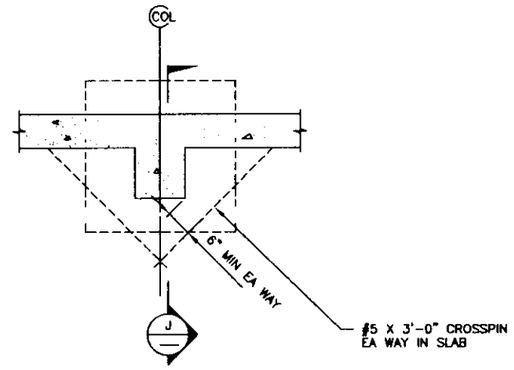

TYPICAL INTERMEDIATE PIER

DETAIL 3 / A-1

NTS

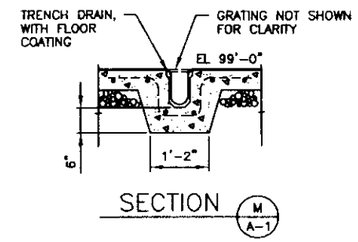

SECTION M / A-1

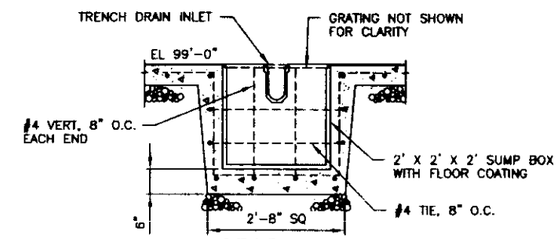

SECTION N / A-1

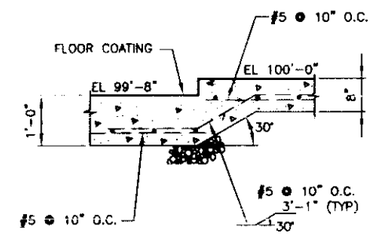

SECTION P / A-1

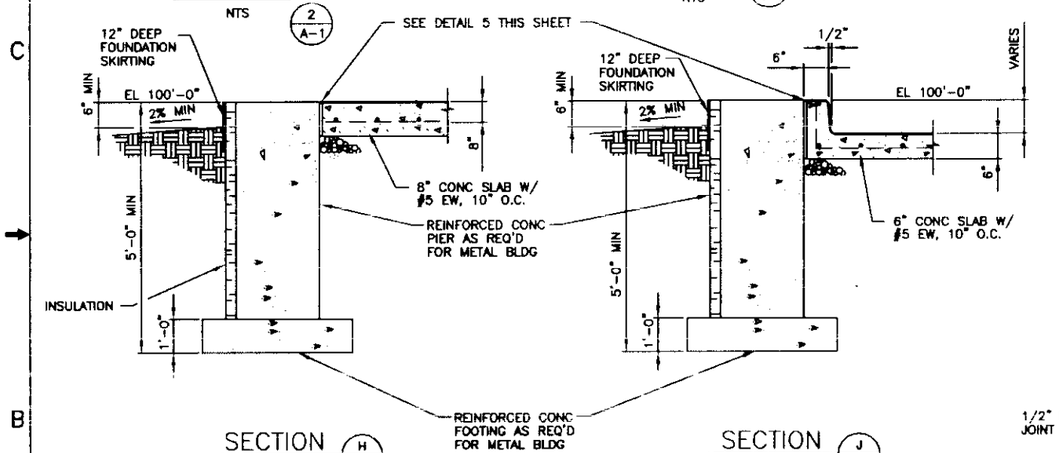

SECTION H

SECTION J

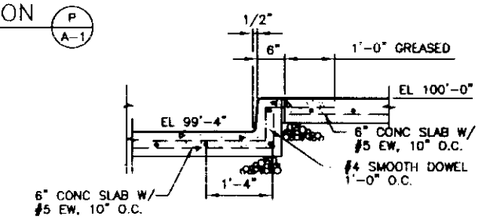

SECTION R / A-1

NOTES

1. PROVIDE MINIMUM 12 INCH COMPACTED BASE COURSE OVER FILTER FABRIC ON UNDISTURBED SOIL UNDER ALL CONCRETE PAVING, WALKS, AND SLABS.
2. PROVIDE MINIMUM 3 INCH AND 1 1/2 INCH CONCRETE COVERAGE ON REINFORCEMENT CAST AGAINST EARTH AND EXPOSED TO WEATHER, RESPECTIVELY.
3. FINISH ALL EXPOSED INTERIOR CONCRETE FLOOR SURFACES, BASE PLATES, AND ANCHOR BOLTS INSTALLED IN PLACE WITH CONTINUOUS CHEMICAL RESISTANT COATING SYSTEM. SAW CUT CONTROL JOINTS BEFORE COATING. OMIT COATING AT EXPANSION JOINTS AND CONCEALED CONCRETE SURFACES.
4. PROVIDE 1 INCH RADIUS MINIMUM INSIDE/OUTSIDE CORNERS, EDGES, AND TRANSITIONS WHERE COATING SYSTEM OCCURS.
5. SUBMIT FOUNDATION SCHEDULE FOR METAL BUILDING SYSTEM SHOWING SIZES & LOCATIONS OF REINFORCEMENTS, COLUMN ANCHOR BOLTS, COLUMN PIERS, GRADE BEAMS, FOOTINGS, AND ALSO DESIGN LOADS IN UPWARD, DOWNWARD, INWARD & OUTWARD DIRECTIONS.

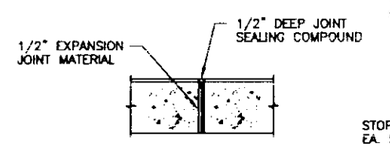

EXPANSION JOINT

DETAIL 5 / A-1, A-3

NTS

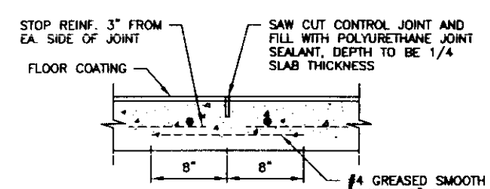

CONTROL JOINT

DETAIL 4 / A-1, A-3

NTS

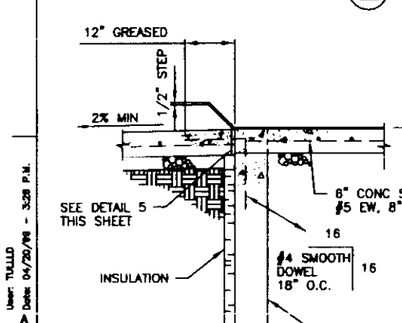

SECTION K / A-1

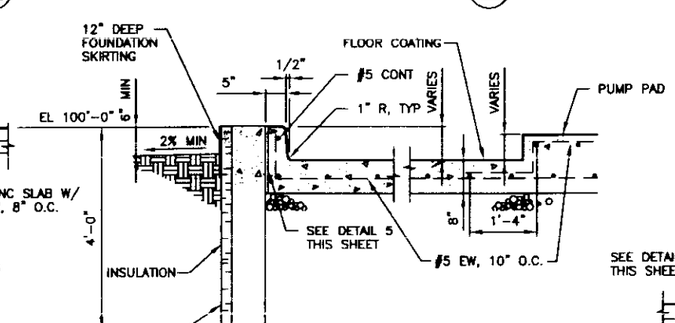

SECTION L / A-1

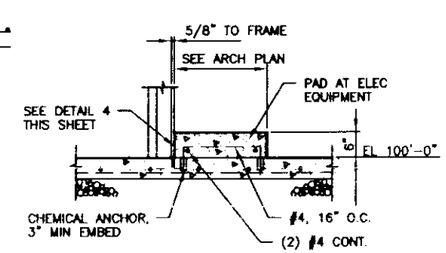

SECTION S / A-1

		APPROVALS	DATE
PROJECT NO.S		CONST REV	
		F.M. G. MECHAM	2-99
		DES MGR S. SHEPHERD	2-99
DESIGN PHASE		DESIGN R.JOHNSON	2-99
FINAL DESIGN		CHECKED G.D.M.	8-99
		DRAWN K.B.	2-99
APPROVED	DATE	SUBCONTRACT NO.	
DOM	10/5/99	RELEASED	

PARSONS

FOR U.S. DEPARTMENT OF ENERGY IDAHO OPERATIONS OFFICE IDAHO FALLS, IDAHO

TAN-1611

OU 1-07B NPTF

NPTF BUILDING FOUNDATION SECTIONS AND DETAILS

SIZE D | SCALE 3/4"=1' | REV 0 | A/E DWG. NO. A-4

ADOCS NO.

File: 36839-4.dwg
Plot: P:\1678-ROBINSON
User: TULLLD
Date: 04/20/99 - 3:28 P.M.

REVISIONS			
REV	DESCRIPTION	DATE	APPROVED

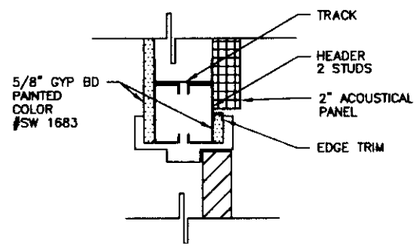

HEAD 6 A-1

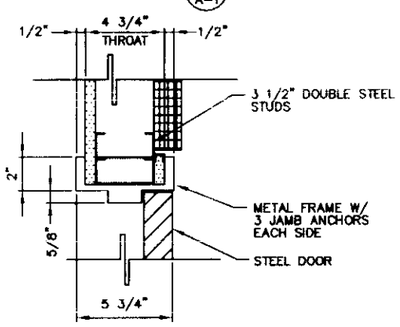

JAMB 7 A-1

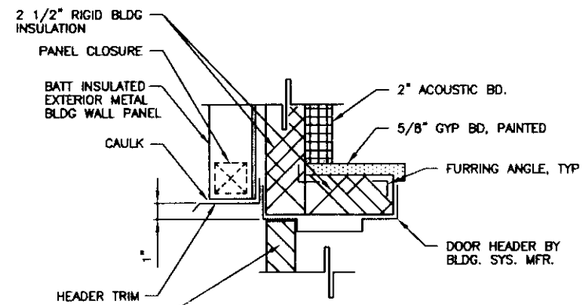

HEAD 8 A-1

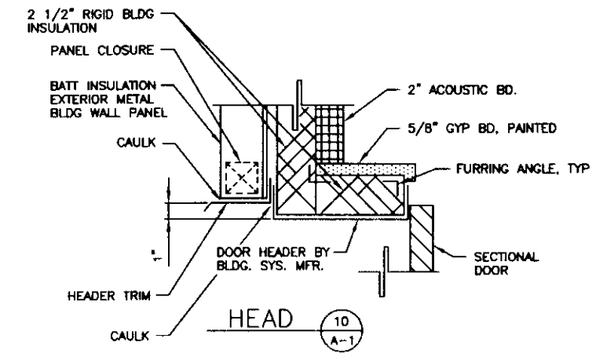

HEAD 10 A-1

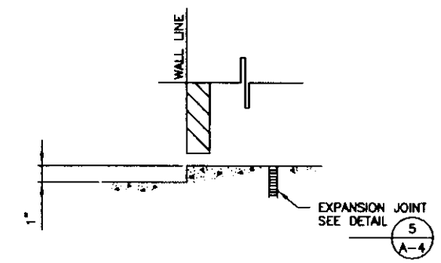

SILL 13 A-1

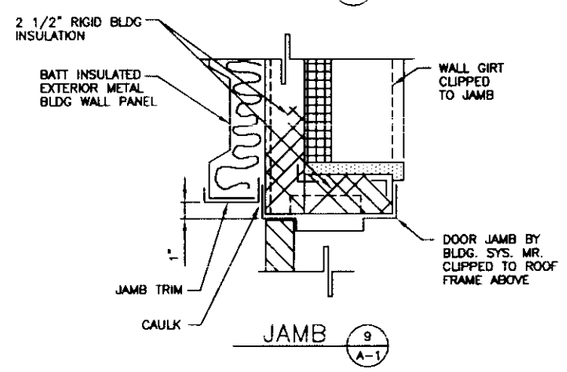

JAMB 9 A-1

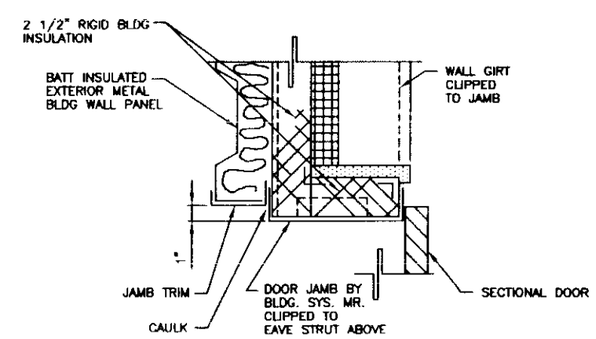

JAMB 11 A-1

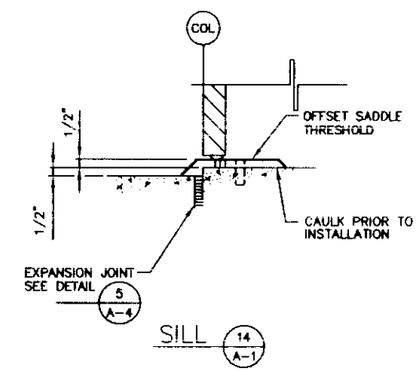

SILL 14 A-1

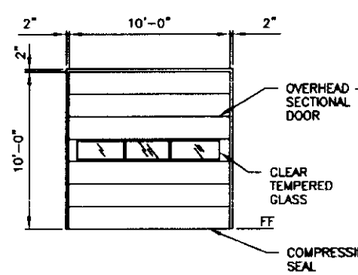

TYPE "A"

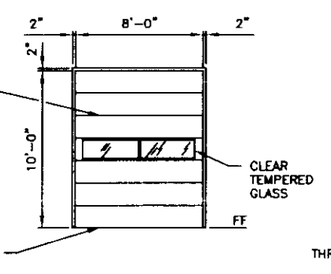

TYPE "B"

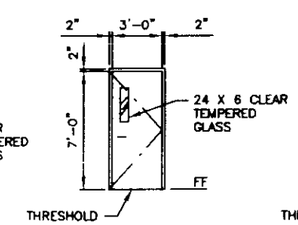

TYPE "C"

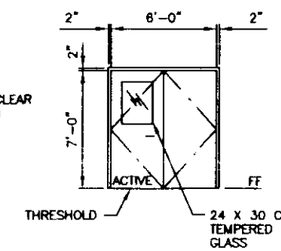

TYPE "D"

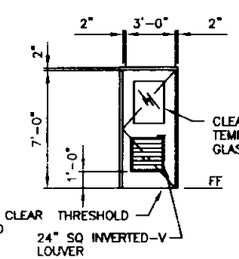

TYPE "E"

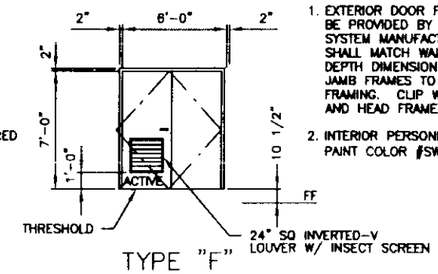

TYPE "F"

NOTES

1. EXTERIOR DOOR FRAMES TO BE PROVIDED BY BUILDING SYSTEM MANUFACTURER AND SHALL MATCH WALL GIRT DEPTH DIMENSION. EXTEND JAMB FRAMES TO ROOF FRAMING. CLIP WALL GIRTS AND HEAD FRAME TO JAMBS.
2. INTERIOR PERSONNEL DOOR PAINT COLOR #SW1755

DOOR TYPES

APPROVALS		DATE
CONST REV		
P.M.	C. MINCHAM	2-99
DES MGR	S. SHEPHERD	2-99
DESIGN	R. JOHNSON	2-99
CHECKED	G.D.M.	6-99
DRAWN	K.B.	2-99
SUBCONTRACT NO.		
RELEASED		

PROJECT NO.S

DESIGN PHASE

FINAL DESIGN

APPROVED DATE 10/8/99

PARSONS

FOR U.S. DEPARTMENT OF ENERGY IDAHO OPERATIONS OFFICE IDAHO FALLS, IDAHO

TAN-1611

OU 1-07B NPTF

DOOR DETAILS

SIZE D | INDEX CODE NUMBER AREA TYPE CL DWG | DRAWING NO. | REV 0 | A/E DWG. NO. A-5

SCALE NONE

ADOCS NO.

User: EMS Date: 03/22/99 - 09:22 A.M.

File: 3623-5.dwg Path: P:\nsh-Bnd

REVISIONS			
REV	DESCRIPTION	DATE	APPROVED
1	REMOVED TAN-33 NOTATION	11/15/99	

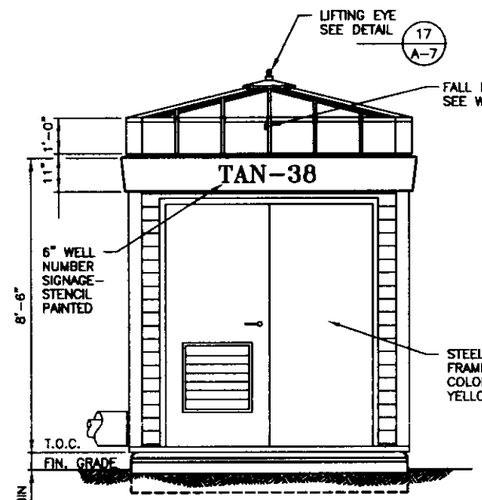

FRONT ELEVATION
SCALE: 1/2"=1'-0"

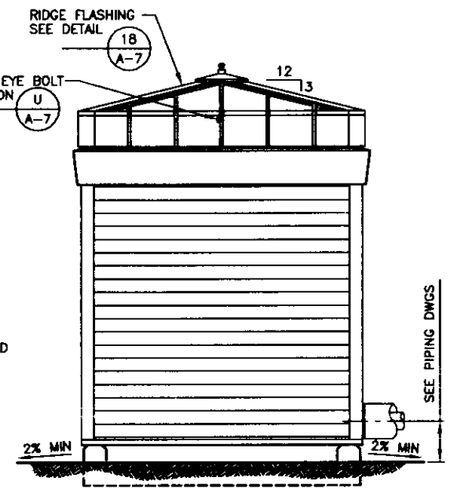

REAR ELEVATION
SCALE: 1/2"=1'-0"

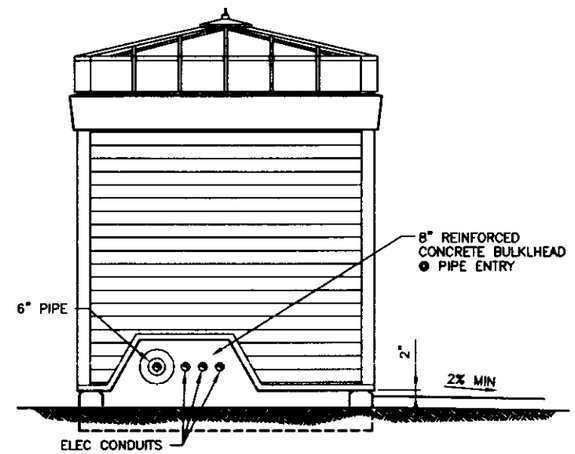

LEFT ELEVATION
SCALE: 1/2"=1'-0"

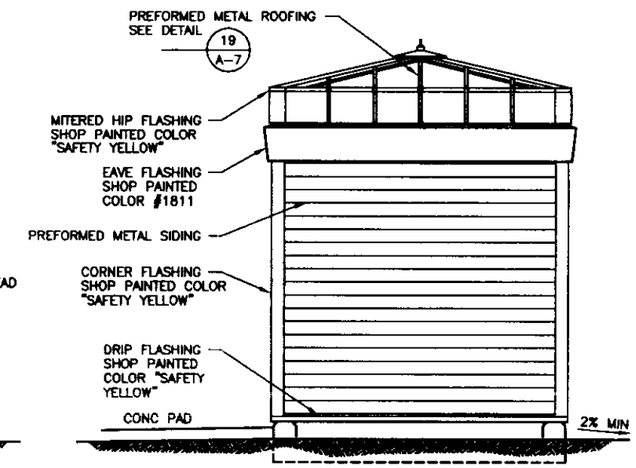

RIGHT ELEVATION
SCALE: 1/2"=1'-0"

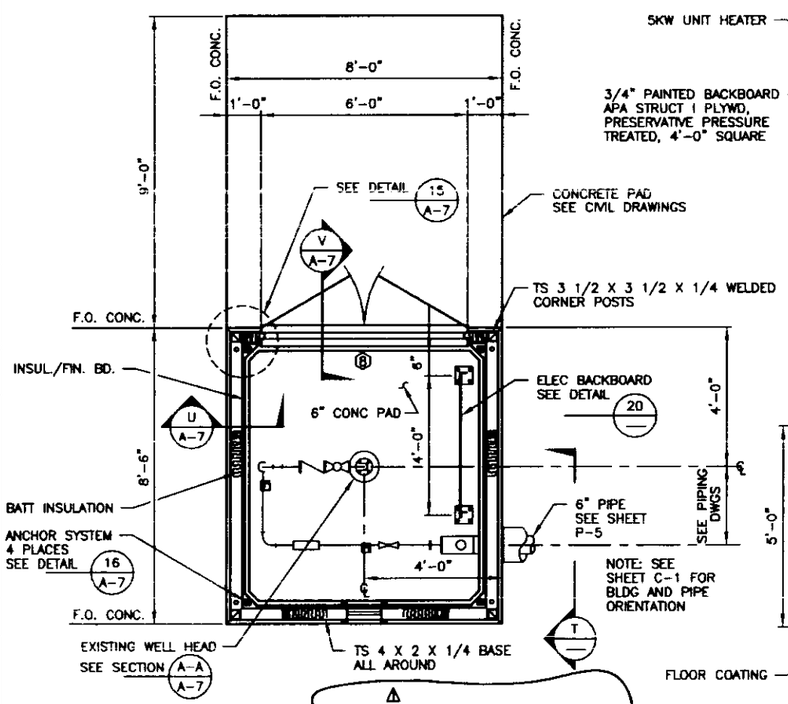

FLOOR PLAN @ TAN- 38, 39, & 40
SCALE: 1/2"=1'-0"
OPP. HAND SIM. @ TAN-40

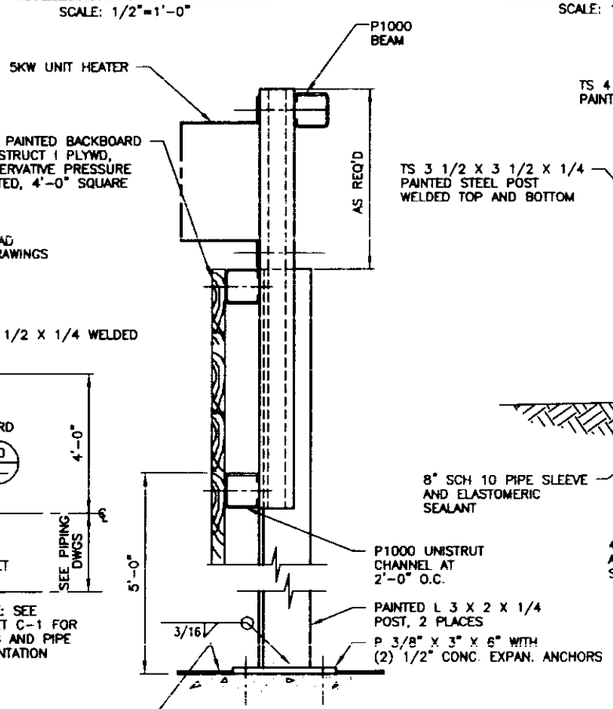

DETAIL 20
SCALE: 3"=1'-0"

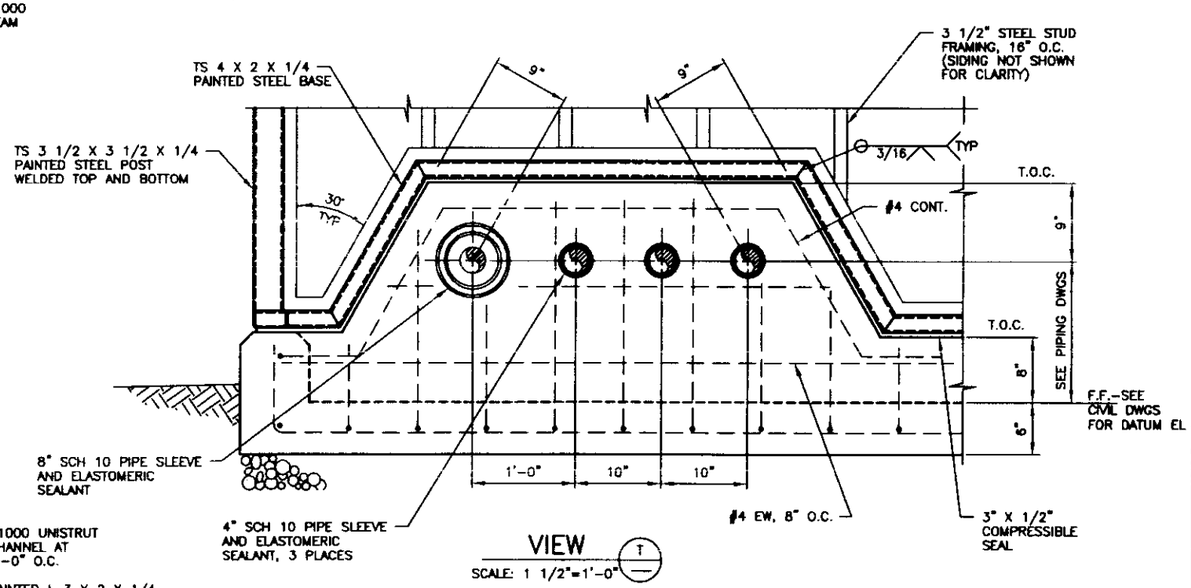

VIEW
SCALE: 1 1/2"=1'-0"

NOTES

1. FOR DOOR SCHEDULE AND ROOM FINISH SCHEDULE SEE SHEET A-1.

APPROVALS		DATE
CONST REV		
P.M.	G. MECHAM	2-99
DES MGR	S. SHEPHERD	2-99
DESIGN	R.JOHNSON	2-99
CHECKED	G.D.M.	8-99
DRAWN	K.B.	2-99
SUBCONTRACT NO.		
RELEASED		

PROJECT NO.S

DESIGN PHASE

FINAL DESIGN

APPROVED	DATE
G.D.M.	10/99

PARSONS

U.S. DEPARTMENT OF ENERGY IDAHO OPERATIONS OFFICE IDAHO FALLS, IDAHO

TAN-1611

OU 1-07B NPTF

WELL HOUSE PLAN AND ELEVATIONS

SIZE D | SCALE NOTED | REV 1 | A/E DWG. NO. A-6

ADOCS NO.

User: KBR Date: 11/16/99 - 01:28 A.M.

File: NPTF-A-6.dwg Path: C:\Abr

REVISIONS			
REV	DESCRIPTION	DATE	APPROVED

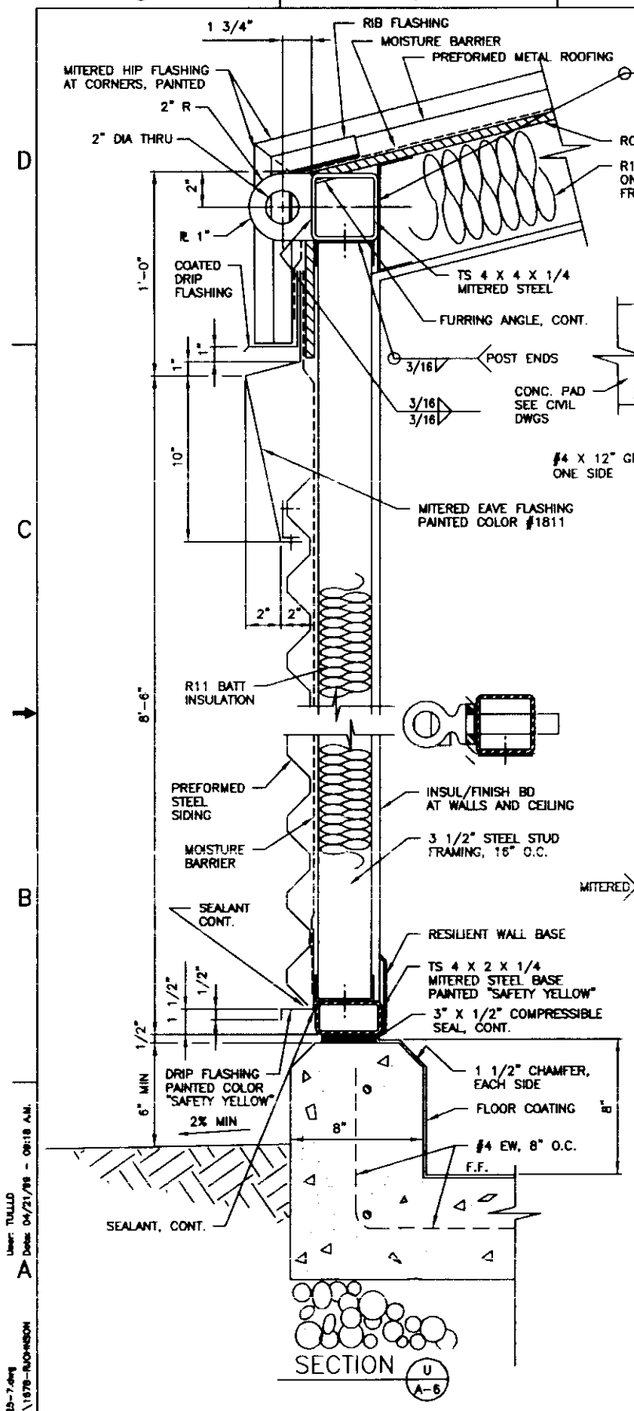

SECTION U A-6

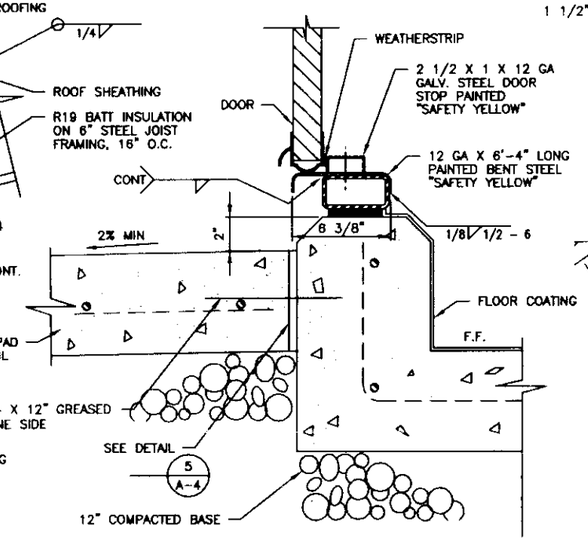

SECTION V A-6

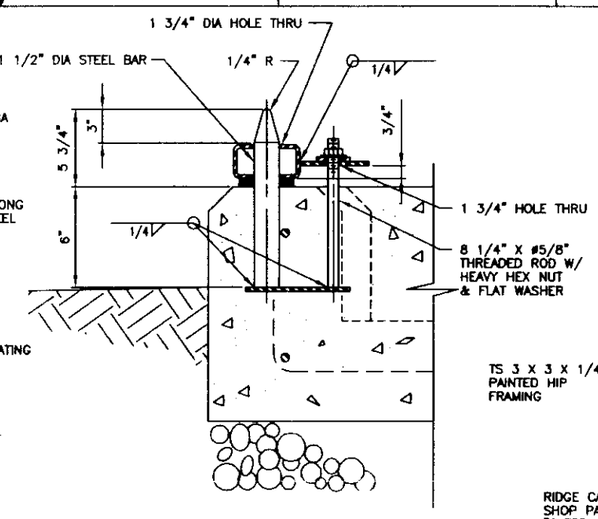

SECTION W

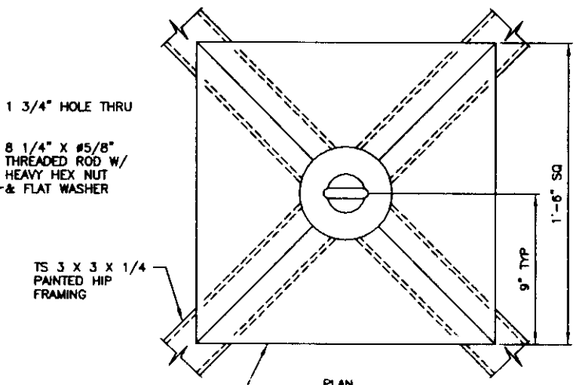

PLAN

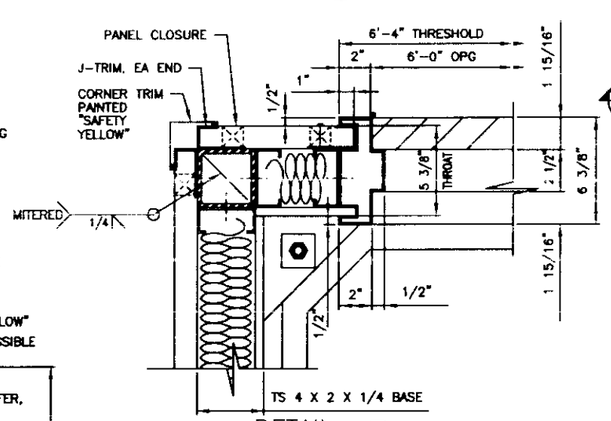

DETAIL 15 A-6

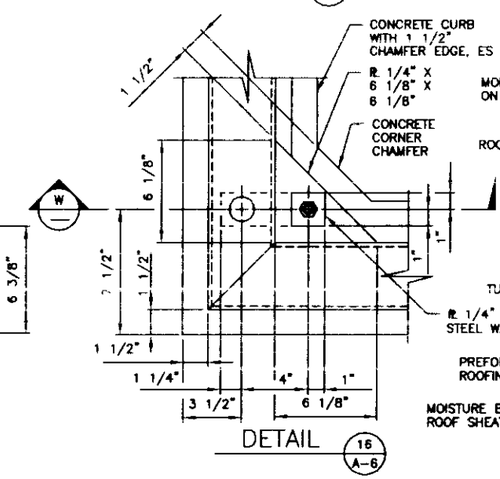

DETAIL 16 A-6

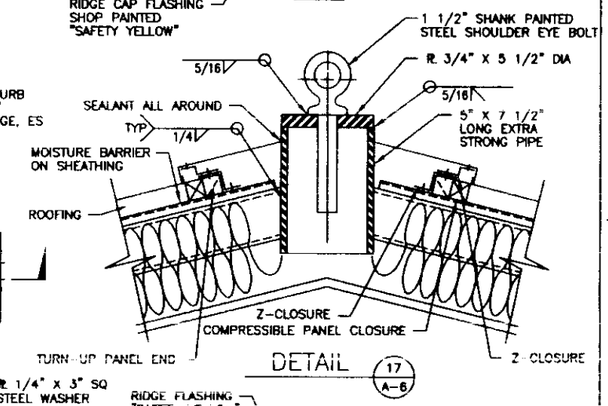

DETAIL 17 A-6

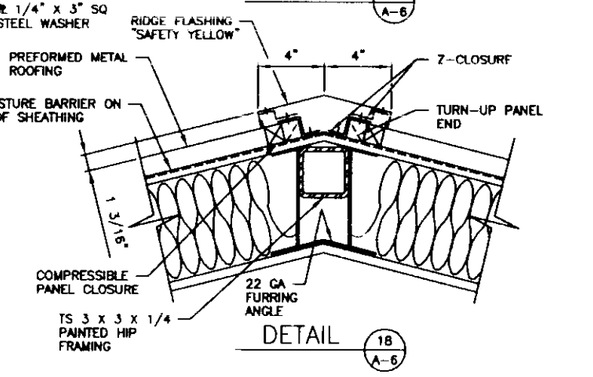

DETAIL 18 A-6

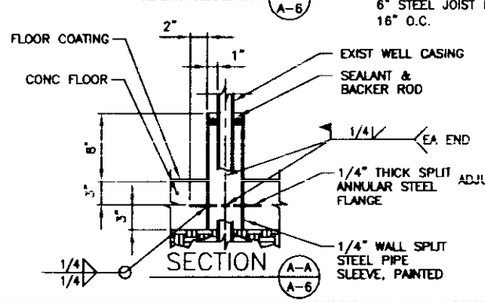

SECTION A-A A-6

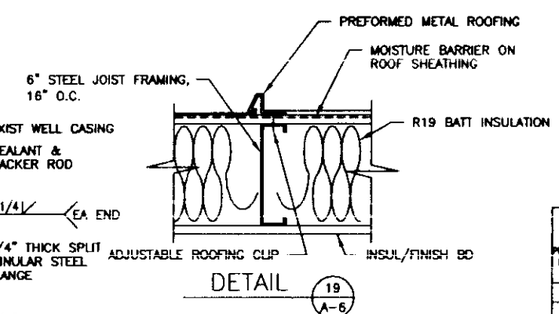

DETAIL 19 A-6

APPROVALS	DATE
CONST REV	
P.M. G. MECHAM	2-99
DES MGR S. SHEPHERD	2-99
DESIGN R.JOHNSON	2-99
CHECKED G.D.M.	8-99
DRAWN K.B.	2-99
SUBCONTRACT NO.	
RELEASED	

PROJECT NO.S

DESIGN PHASE

FINAL DESIGN

APPROVED DATE 10/5/99

PARSONS

U.S. DEPARTMENT OF ENERGY IDAHO OPERATIONS OFFICE IDAHO FALLS, IDAHO

TAN-1611

OU 1-07B NPTF

WELL HOUSE SECTIONS AND DETAILS

SIZE D | SCALE 3"=1'-0" | REV 0 | A/E DWG. NO. A-7

User: TULLO Date: 04/21/98 - 08:18 A.M.

File: 3623-7.dwg Path: P:\1670-RICHARDSON

ADOCS NO.

REVISIONS			
REV	DESCRIPTION	DATE	APPROVED

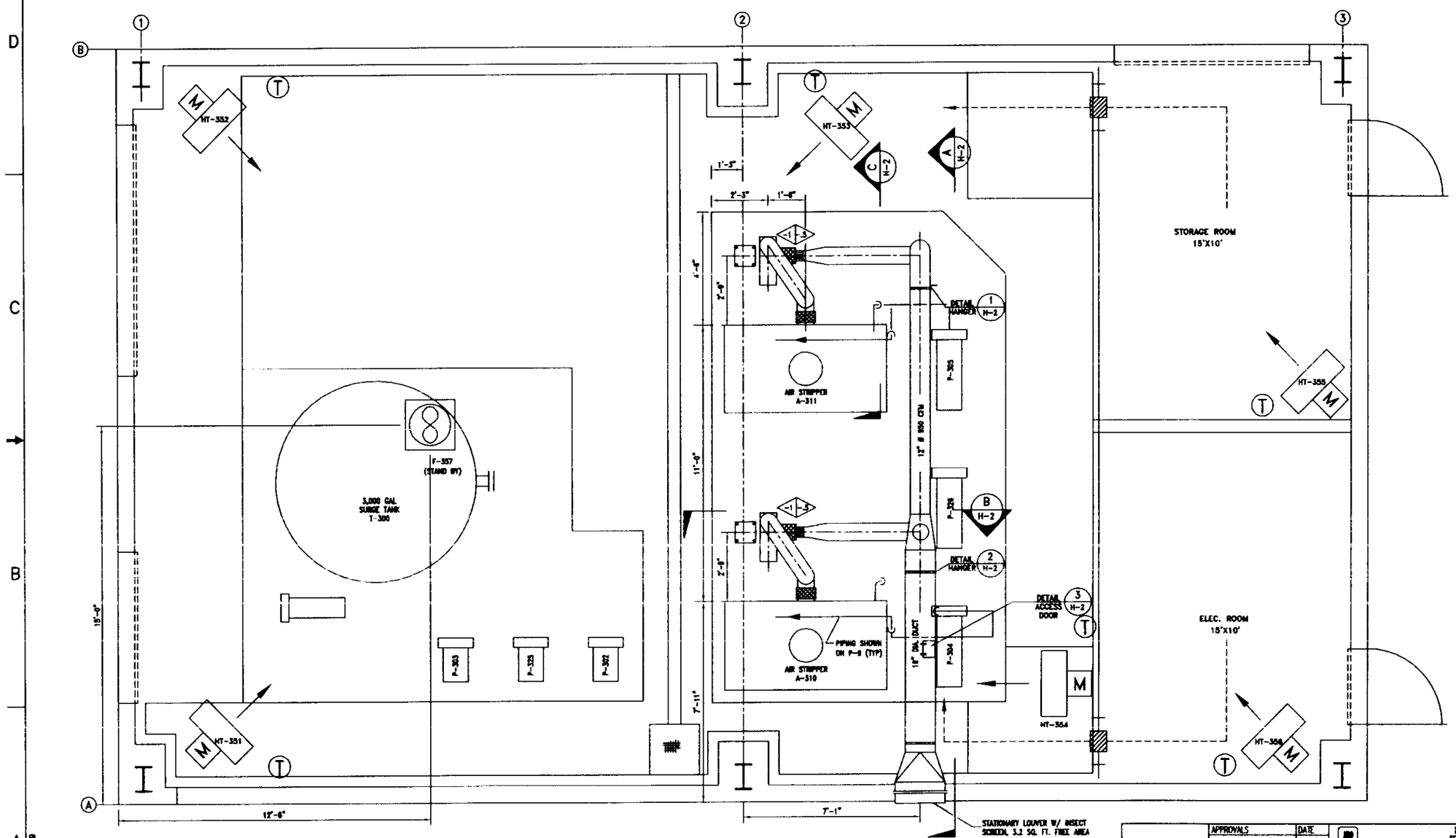

APPROVALS		DATE
CONST REV		
P.M.	J.S.H.	8/99
DES MGR	G.D.M.	8/99
DESIGN	A.J.C.	8/99
CHECKED	A.J.C.	8/99
DRAWN	M.J.J.	2/99
SUBCONTRACT NO.		
RELEASED		

PROJECT NO.S

DESIGN PHASE

FINAL DESIGN

APPROVED | DATE

PARSONS

FOR U.S. DEPARTMENT OF ENERGY IDAHO OPERATIONS OFFICE IDAHO FALLS, IDAHO

TAN 1611 OU 1-07B NPTF

HEATING AND VENTILATION

LAYOUT PLAN

SIZE D | SCALE 1/4"=1'-0" | REV 0 | A/E DWG. NO. H-1

ADCCS NO.

NPTF-H-1.DWG 10-5-99

REVISIONS			
REV	DESCRIPTION	DATE	APPROVED

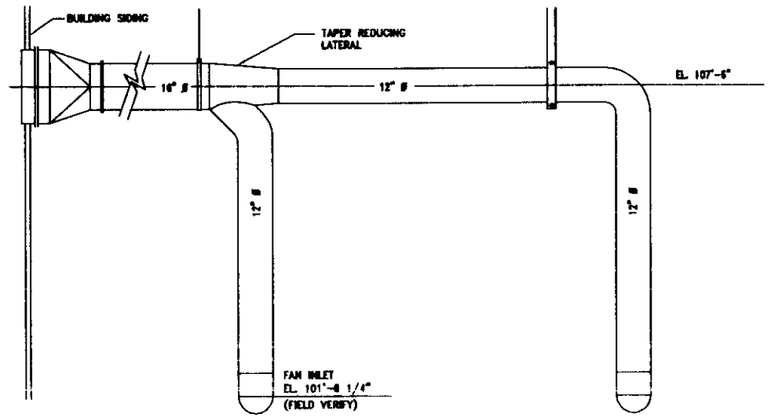

ELEVATION A H-1

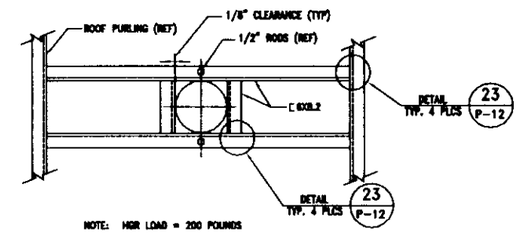

PLAN AT DISCHARGE PIPE SUPPORT

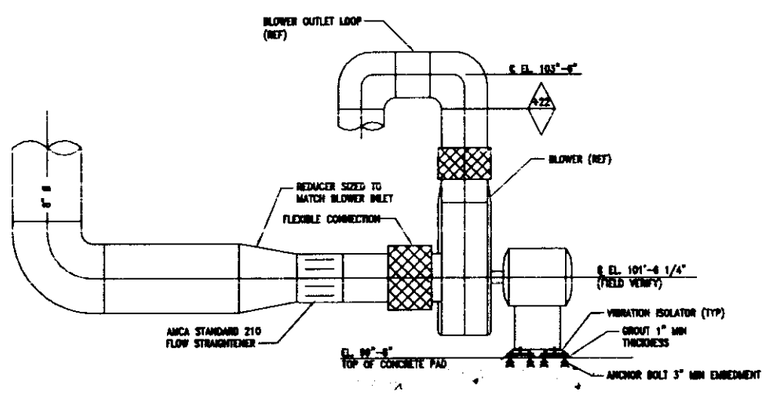

ELEVATION B H-1

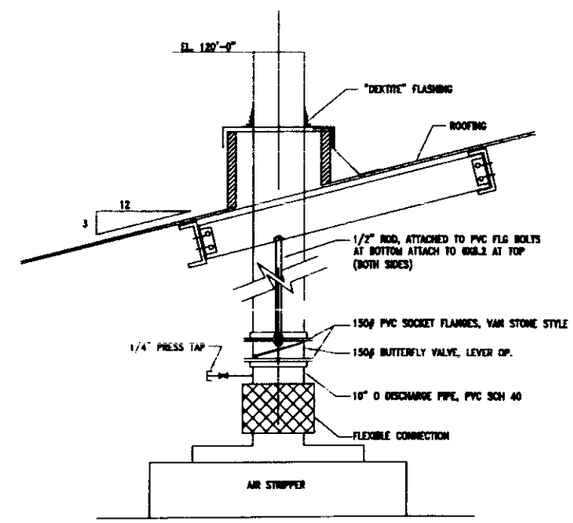

SECTION C H-1

PROJECT NO.5	APPROVALS		DATE
	CONST REV		
	P.M.	J.S.R.	8/99
	DES MGR	G.D.M.	8/99
DESIGN PHASE	DESIGN	A.J.C.	8/99
	CHECKED	A.J.C.	8/99
FINAL DESIGN	DRAWN	M.J.J.	2/99
APPROVED / DATE	SUBCONTRACT NO.		
Som 10/5/99	RELEASED		

PARSONS — FOR U.S. DEPARTMENT OF ENERGY, IDAHO OPERATIONS OFFICE, IDAHO FALLS, IDAHO

TAN 1611

OU 1-07B NPTF
HEATING AND VENTILATION
ELEVATIONS AND DETAILS

SIZE D — BLOCK CODE NUMBER: AREA / TYPE / CL / ORIG — DRAWING NO. — REV 0 — A/E DWG. NO. H-2

SCALE 1/4"=1'-0"

ADOCS NO.

NPTF-H-2.DWG B-47999 2000ppm

REVISIONS			
REV	DESCRIPTION	DATE	APPROVED
1	REMOVED HT-33 FROM SCHEDULE	11/12/99	

NOTE:

1. SUBCONTRACTOR SHALL PROVIDE AND INSTALL UNIT HEATER SUPPORTS IN ACCORDANCE WITH SMACNA STANDARDS

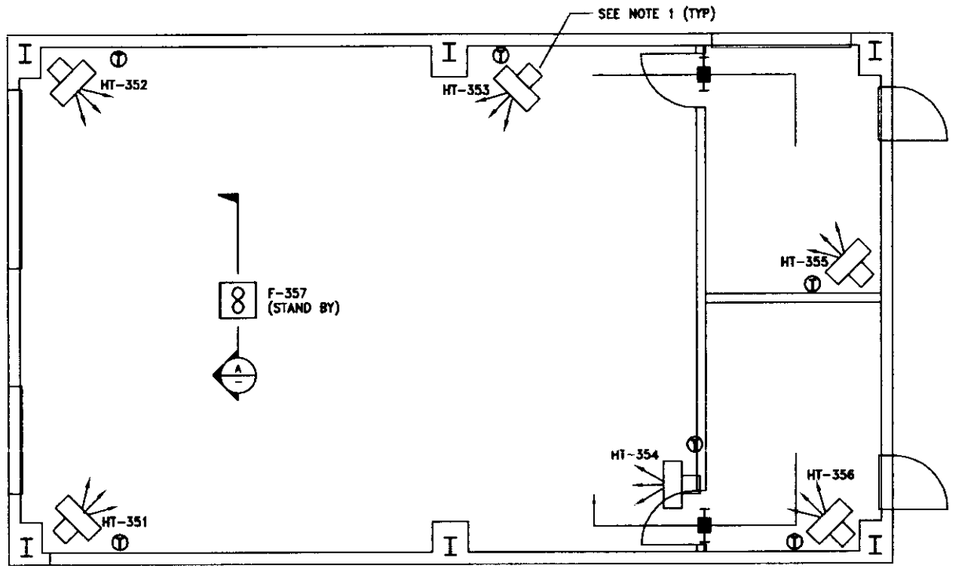

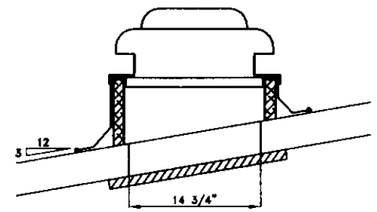

DETAIL A

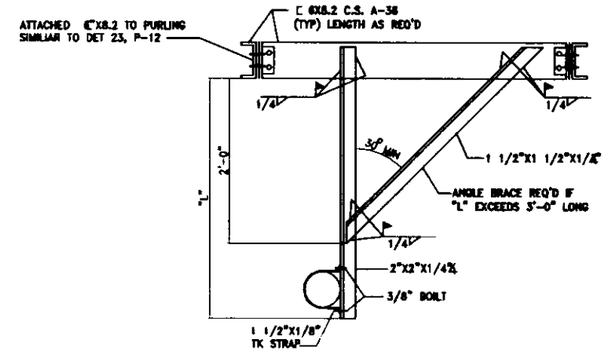

NOTE:
LOAD = 100 POUNDS

DETAIL 1 / H-1

UNIT HEATER SCHEDULE

UNIT NO.	LOCATION	SERVICE	TYPE	ACFM	HEATER CAPACITY KW	HEATER CAPACITY MBH	HEATER VOLTS/PH/HZ	HEATER AMPS	MOTOR HP	MOTOR VOLTS/PH/HZ	MOTOR RPM	MOTOR TYPE	OPER WT (lbs)	MANUFACTURER MODEL NO.	REMARKS
HT-351	PROCESS ROOM	PROCESS ROOM	ELECTRIC	700	5		480/3/60	7.3	1/2	48013160	1725		170	INDEGLO 237-F246-0056U	WITH REMOTE ROOM THERMOSTAT
HT-352	PROCESS ROOM	PROCESS ROOM													WITH REMOTE ROOM THERMOSTAT
HT-353	PROCESS ROOM	PROCESS ROOM													WITH REMOTE ROOM THERMOSTAT
HT-354	PROCESS ROOM	PROCESS ROOM													WITH REMOTE ROOM THERMOSTAT
HT-355	STORAGE ROOM	STORAGE ROOM													WITH REMOTE ROOM THERMOSTAT
HT-356	ELECTRICAL RM	ELECTRICAL RM													WITH REMOTE ROOM THERMOSTAT
HT-38	WELLHOUSE TAN-38														WITH REMOTE ROOM THERMOSTAT
HT-39	WELLHOUSE TAN-39														WITH REMOTE ROOM THERMOSTAT
HT-40	WELLHOUSE TAN-40														WITH REMOTE ROOM THERMOSTAT

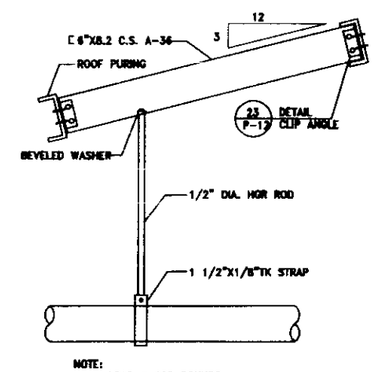

NOTE:
LOAD = 100 POUNDS

DETAIL 2 / H-1

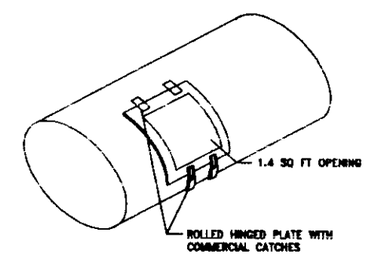

DETAIL 3 / H-1

FAN SCHEDULE

UNIT NO.	LOCATION	SERVICE	TYPE	FAN ACFM	FAN RPM	FAN DRIVE	FAN BHP	MOTOR HP	MOTOR VOLTS/PH/HZ	MOTOR RPM	MOTOR TYPE	OPER WT (lbs)	MANUFACTURER MODEL NO.	REMARKS
F-357	EXHAUST ROOF MOUNTED	PROCESS ROOM	CENTRIFUGAL ROOF EXHAUSTER	1536	1725	DIRECT	0.22	1/4	460/3/60	1725	1536	1536	GREENHECK #C-100-AX-QD	WITH BACK DRAFT DAMPER AND SCREEN, USE GREENHECK PITCHED CURB #GPIP-22-GB CURB#PITCH = 3:12

		APPROVALS		DATE
PROJECT NO.S		CONST REV		
		P.M.	J.S.R.	8/99
		DES MGR	G.D.M.	8/99
DESIGN PHASE		DESIGN	G.D.M.	8/99
		CHECKED	A.J.C.	8/99
FINAL DESIGN		DRAWN	M.J.J.	2/99
APPROVED	DATE	SUBCONTRACT NO.		
G.D.M.	10/99	RELEASED		

PARSONS

FOR U.S. DEPARTMENT OF ENERGY IDAHO OPERATIONS OFFICE IDAHO FALLS, IDAHO

TAN 1611

OU 1-07B NPTF
HEATING AND VENTILATION
DIAGRAM AND DETAILS

SIZE D | SCALE 1/4"=1'-0" | REV 1 | A/E DWG. NO. H-3

ADOCS NO.

NPTF-H-3.DWG 11/12/99

REVISIONS			
REV	DESCRIPTION	DATE	APPROVED
1	REMOVED TAN 33	11/11/99	

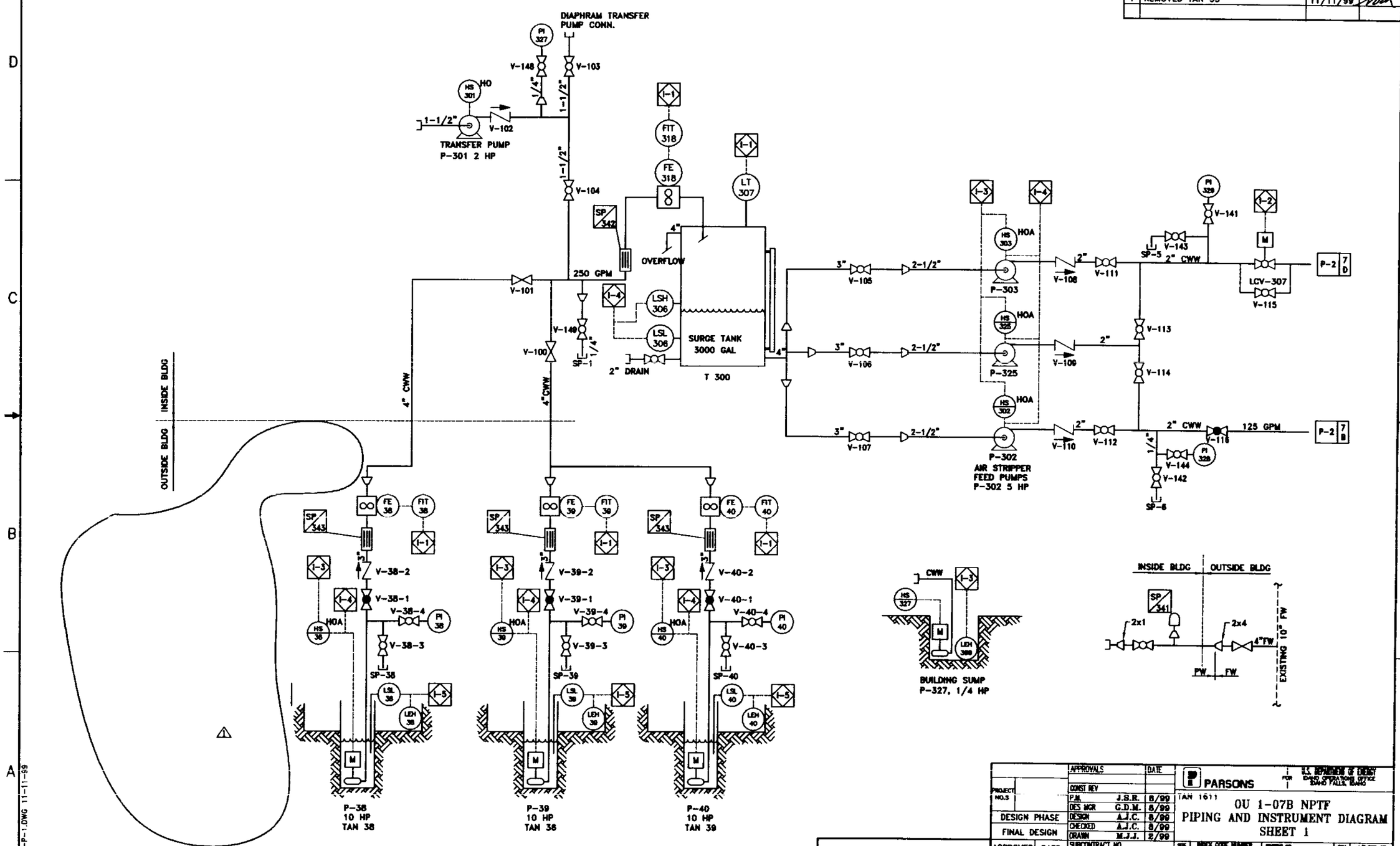

		APPROVALS		DATE
PROJECT NO.S		CONST REV		
		P.M.	J.S.R.	8/99
		DES MGR	G.D.M.	8/99
DESIGN PHASE		DESIGN	A.J.C.	8/99
		CHECKED	A.J.C.	8/99
FINAL DESIGN		DRAWN	M.J.J.	2/99
APPROVED	DATE	SUBCONTRACT NO.		
G.D.M.	10/99	RELEASED		

PARSONS

FOR U.S. DEPARTMENT OF ENERGY IDAHO OPERATIONS OFFICE IDAHO FALLS, IDAHO

TAN 1611

OU 1-07B NPTF
PIPING AND INSTRUMENT DIAGRAM
SHEET 1

SIZE D | SCALE NONE | REV 1 | A/E DWG. NO. P-1

NPTF-P-1.DWG 11-11-99

ADOCS NO.

REVISIONS			
REV	DESCRIPTION	DATE	APPROVED
1	GENERAL REVISION	11/11/99	

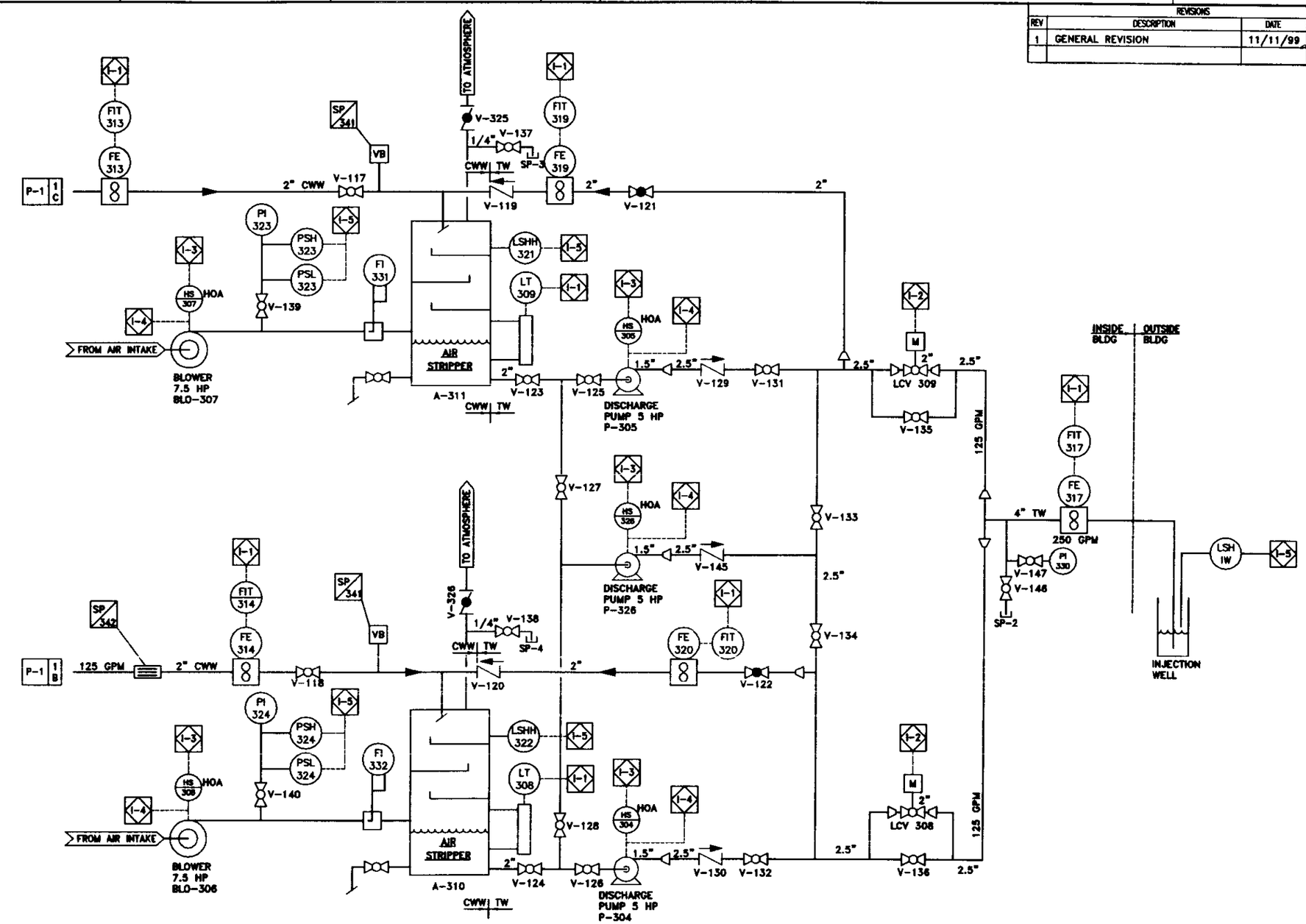

	APPROVALS	DATE
	CONST REV	
PROJECT NO.S	P.M. J.S.R.	8/99
	DES MGR G.D.M.	8/99
DESIGN PHASE	DESIGN A.J.C.	8/99
FINAL DESIGN	CHECKED A.J.C.	8/99
	DRAWN M.J.J.	8/99
APPROVED DATE	SUBCONTRACT NO.	
G.D.M. 10/99	RELEASED	

PARSONS

U.S. DEPARTMENT OF ENERGY IDAHO OPERATIONS OFFICE IDAHO FALLS, IDAHO

TAN 1611

OU 1-07B NPTF PIPING AND INSTRUMENT DIAGRAM SHEET 2

SIZE D | SCALE NONE | REV 1 | A/E DWG. NO. P-2

NPTF-P-2.DWG 11-11-99

ADOCS NO.

REVISIONS			
REV	DESCRIPTION	DATE	APPROVED
1	GENERAL REVISION	11/10/00	

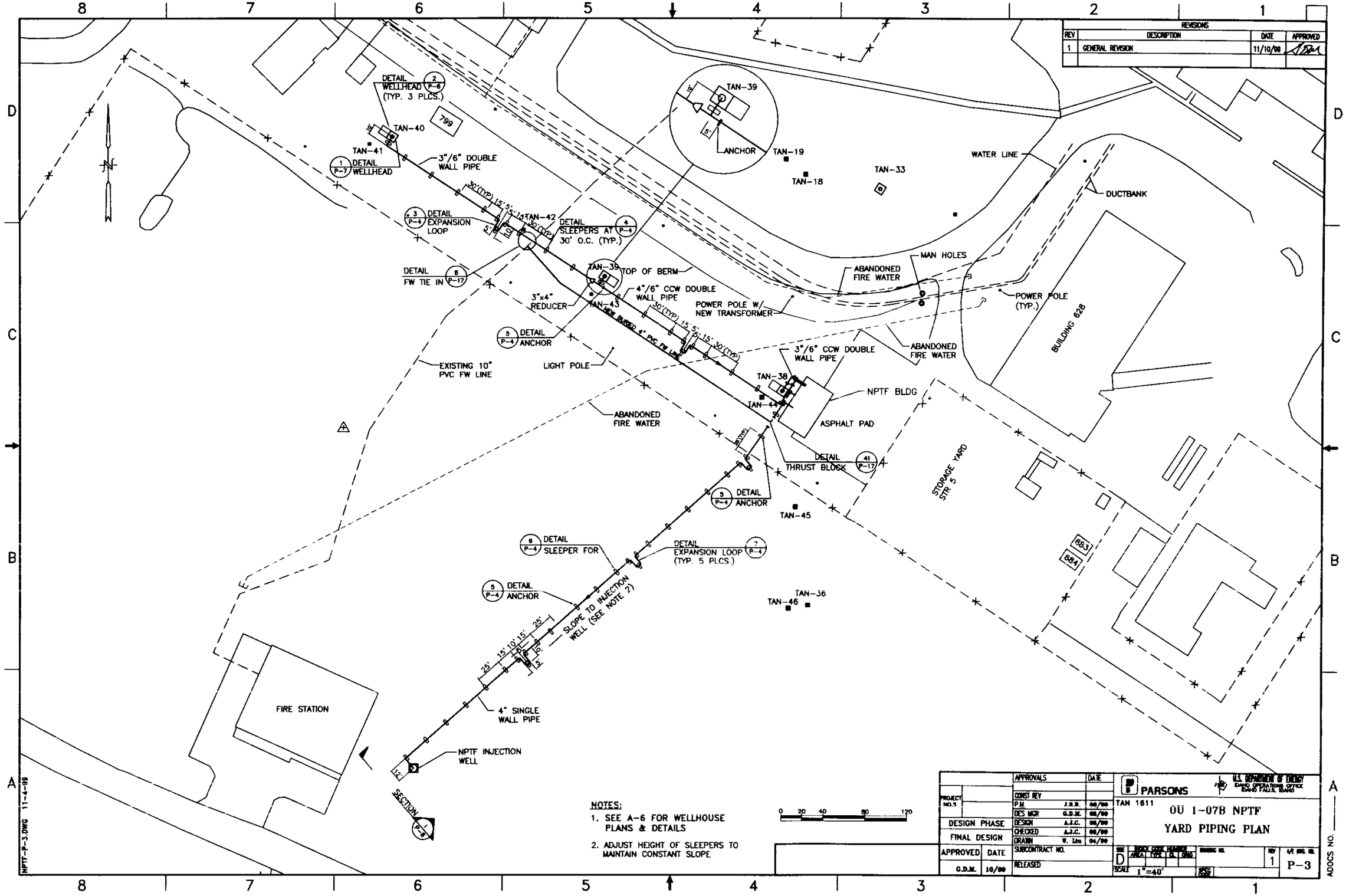

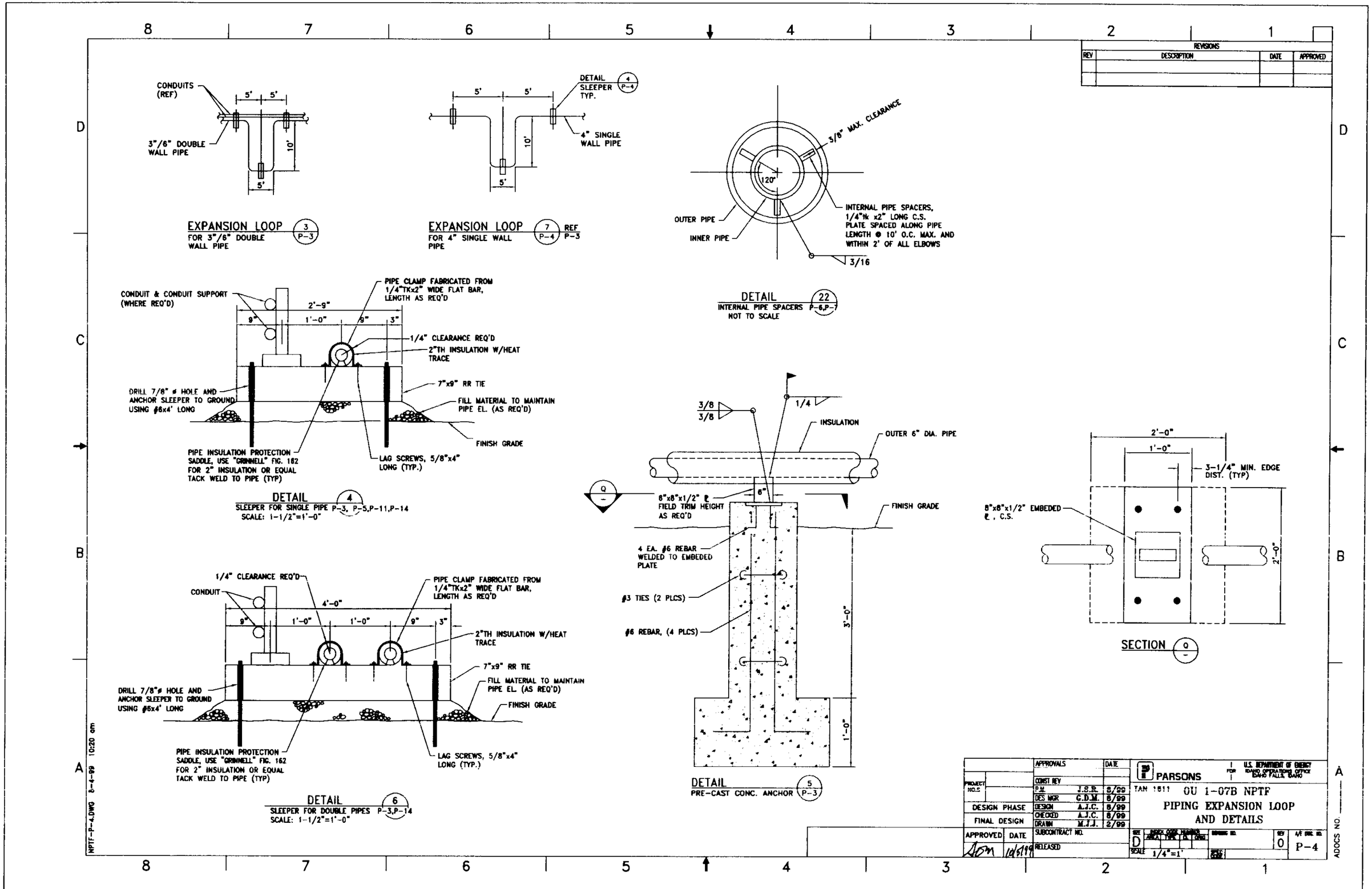

CONDUITS (REF)
5'
5'
3"/6" DOUBLE WALL PIPE
10'
5'
EXPANSION LOOP 3 P-3
FOR 3"/6" DOUBLE WALL PIPE
DETAIL 4 P-4
SLEEPER TYP.
4" SINGLE WALL PIPE
EXPANSION LOOP 7 P-4 REF P-3
FOR 4" SINGLE WALL PIPE
3/8" MAX. CLEARANCE
120°
OUTER PIPE
INNER PIPE
INTERNAL PIPE SPACERS, 1/4"tk x2" LONG C.S. PLATE SPACED ALONG PIPE LENGTH @ 10' O.C. MAX. AND WITHIN 2' OF ALL ELBOWS
3/16
DETAIL 22 P-6,P-7
INTERNAL PIPE SPACERS
NOT TO SCALE
CONDUIT & CONDUIT SUPPORT (WHERE REQ'D)
PIPE CLAMP FABRICATED FROM 1/4"TKx2" WIDE FLAT BAR, LENGTH AS REQ'D
2'-9"
9"
1'-0"
9"
3"
1/4" CLEARANCE REQ'D
2"TH INSULATION W/HEAT TRACE
7"x9" RR TIE
DRILL 7/8" ø HOLE AND ANCHOR SLEEPER TO GROUND USING #6x4' LONG
FILL MATERIAL TO MAINTAIN PIPE EL. (AS REQ'D)
FINISH GRADE
PIPE INSULATION PROTECTION SADDLE, USE "GRINNELL" FIG. 162 FOR 2" INSULATION OR EQUAL TACK WELD TO PIPE (TYP)
LAG SCREWS, 5/8"x4" LONG (TYP.)
DETAIL 4
SLEEPER FOR SINGLE PIPE P-3, P-5,P-11,P-14
SCALE: 1-1/2"=1'-0"
3/8
3/8
1/4
INSULATION
OUTER 6" DIA. PIPE
Q
6"x8"x1/2" ℄ FIELD TRIM HEIGHT AS REQ'D
6"
FINISH GRADE
4 EA. #6 REBAR WELDED TO EMBEDED PLATE
#3 TIES (2 PLCS)
#6 REBAR, (4 PLCS)
3'-0"
1'-0"
DETAIL 5 P-3
PRE-CAST CONC. ANCHOR
2'-0"
1'-0"
3-1/4" MIN. EDGE DIST. (TYP)
8"x8"x1/2" EMBEDED ℄, C.S.
2'-0"
SECTION Q
1/4" CLEARANCE REQ'D
CONDUIT
4'-0"
PIPE CLAMP FABRICATED FROM 1/4"TKx2" WIDE FLAT BAR, LENGTH AS REQ'D
9"
1'-0"
1'-0"
9"
3"
2"TH INSULATION W/HEAT TRACE
7"x9" RR TIE
DRILL 7/8"ø HOLE AND ANCHOR SLEEPER TO GROUND USING #6x4' LONG
FILL MATERIAL TO MAINTAIN PIPE EL. (AS REQ'D)
FINISH GRADE
PIPE INSULATION PROTECTION SADDLE, USE "GRINNELL" FIG. 162 FOR 2" INSULATION OR EQUAL TACK WELD TO PIPE (TYP)
LAG SCREWS, 5/8"x4" LONG (TYP.)
DETAIL 6
SLEEPER FOR DOUBLE PIPES P-3,P-14
SCALE: 1-1/2"=1'-0"
REVISIONS
REV
DESCRIPTION
DATE
APPROVED
PARSONS
U.S. DEPARTMENT OF ENERGY IDAHO OPERATIONS OFFICE IDAHO FALLS, IDAHO
TAN 1511
OU 1-07B NPTF
PIPING EXPANSION LOOP AND DETAILS
DESIGN PHASE
FINAL DESIGN
APPROVED
DATE
10/5/99
APPROVALS
DATE
CONST REV
P.M. J.S.R. 8/99
DES MGR G.D.M. 8/99
DESIGN A.J.C. 8/99
CHECKED A.J.C. 8/99
DRAWN M.J.J. 2/99
SUBCONTRACT NO.
RELEASED
SIZE D
SCALE 1/4"=1'
REV 0
A/E DWG. NO. P-4
ADOCS NO.
NPTF-P-4.DWG 8-4-99 10:20 am

REVISIONS			
REV	DESCRIPTION	DATE	APPROVED
1	GENERAL REVISION	11/11/99	[signature]

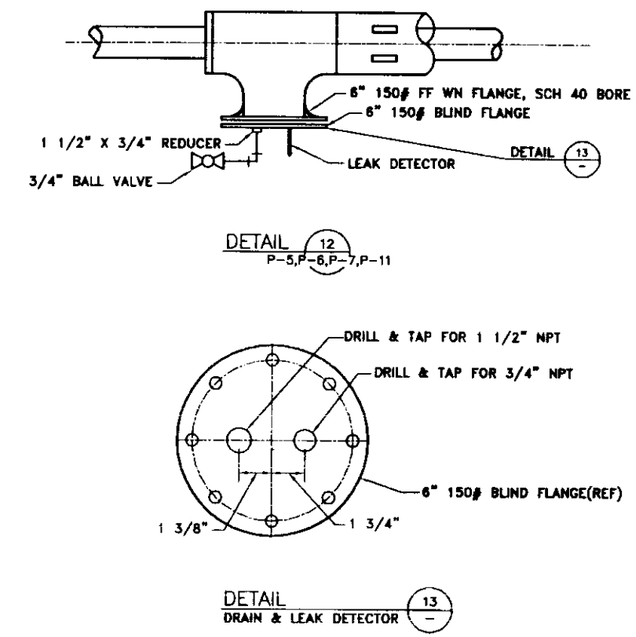

PROJECT NO.S		APPROVALS		DATE
		CONST REV		
		P.M.	J.S.R.	8/99
		DES MGR	G.D.M.	8/99
DESIGN PHASE		DESIGN	A.J.C.	8/99
FINAL DESIGN		CHECKED	A.J.C.	8/99
		DRAWN	W. Liu	4/99
APPROVED	DATE	SUBCONTRACT NO.		
G.D.M.	10/99	RELEASED		

PARSONS

FOR U.S. DEPARTMENT OF ENERGY IDAHO OPERATIONS OFFICE IDAHO FALLS, IDAHO

TAN 1611

OU 1-07B NPTF

PIPING DETAILS

SIZE D | INDEX CODE NUMBER: AREA, TYPE, CL, ORIG | DRAWING NO. | REV 1 | A/E DWG. NO. P-5

SCALE 1/4"=1' | SPEC CODE

NPTF-P-5.DWG 11-11-99

ADOCS NO.

REVISIONS			
REV	DESCRIPTION	DATE	APPROVED
1	REMOVED TAN-33 WELLHEAD	11/12/99	GDM
2	REVISED PER ADDENDUM NO. 2	1/27/00	

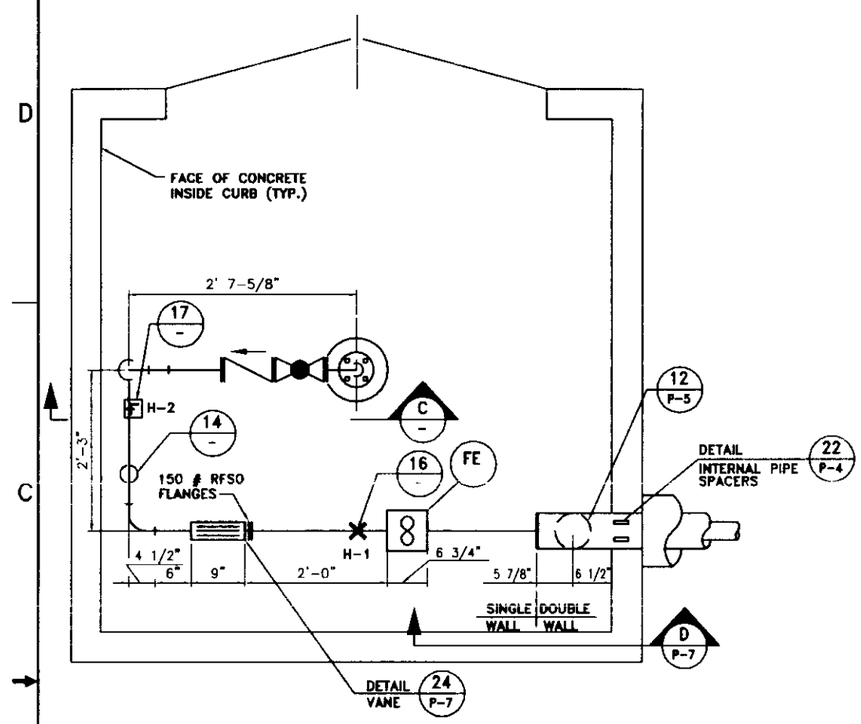

WELLHEAD PLAN 2 P-3
TAN-38 & 39

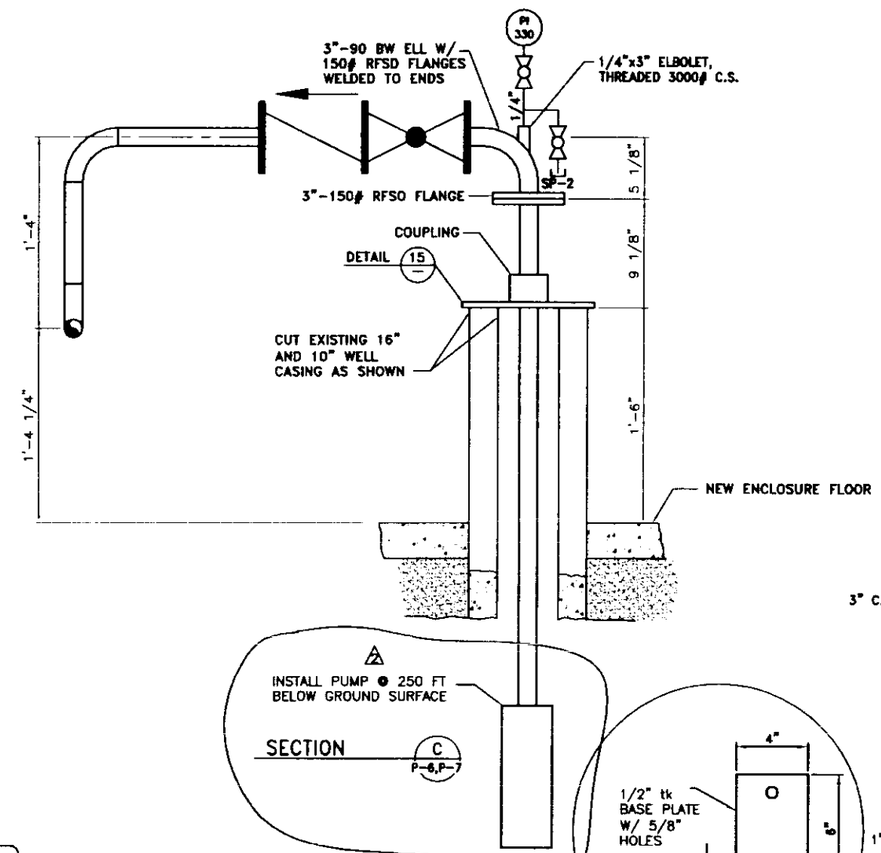

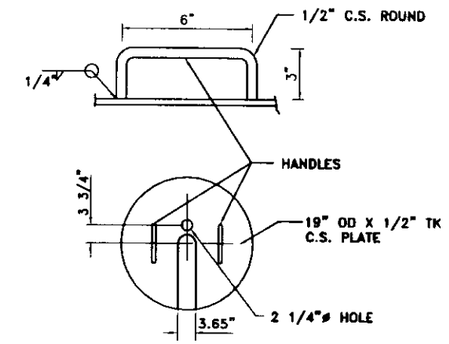

DETAIL 15

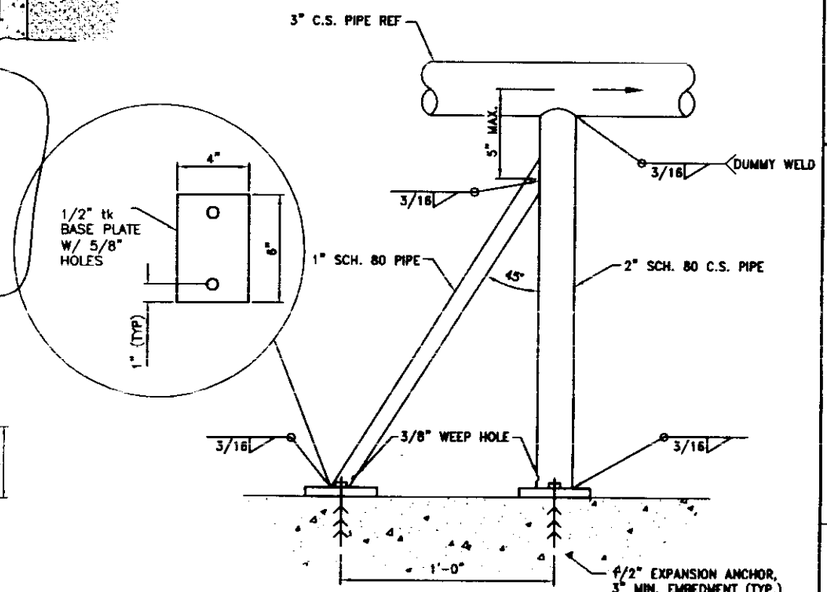

DETAIL H-D 16 P-6,P-7
ANCHOR N.T.S.

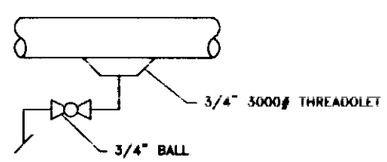

DETAIL 14
DRAIN N.T.S.

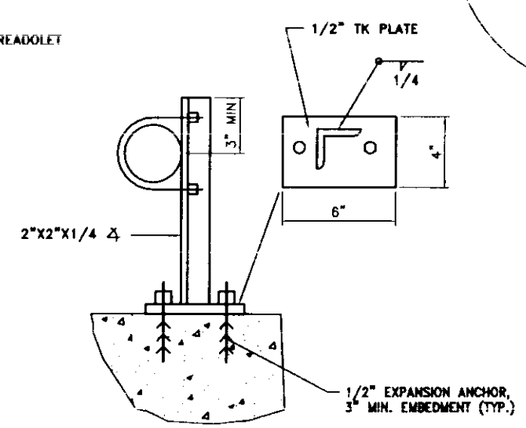

DETAIL H-2 17 P-6, P-7
HANGER

APPROVALS		DATE
CONST REV		
P.M.	J.S.R.	8/99
DES MGR	C.D.M.	8/99
DESIGN	A.J.C.	8/99
CHECKED	A.J.C.	8/99
DRAWN	M.J.J.	2/99
SUBCONTRACT NO.		
RELEASED		

PROJECT NO.S

DESIGN PHASE: FINAL DESIGN

APPROVED: G.D.M. DATE: 10/99

PARSONS

FOR U.S. DEPARTMENT OF ENERGY, IDAHO OPERATIONS OFFICE, IDAHO FALLS, IDAHO

TAN 1611

OU 1-07B NPTF

EXTRACTION WELLHEAD PIPING AND DETAILS

SIZE D | SCALE 1/4"=1' | REV 2 | A/E DWG. NO. P-6

NPTF-P-6.DWG 11-12-99

ADOCS NO.

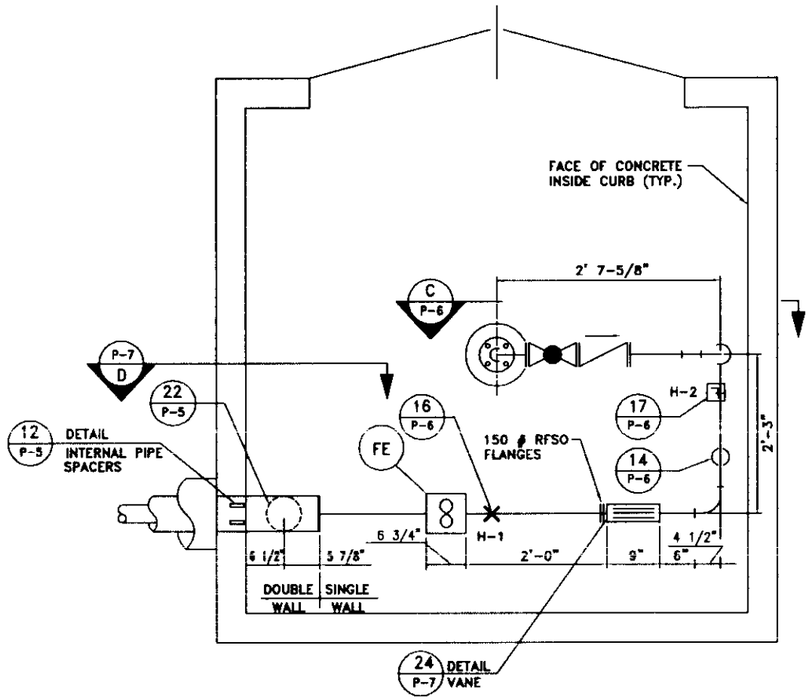

WELLHEAD PLAN 1 P-3
TAN-40

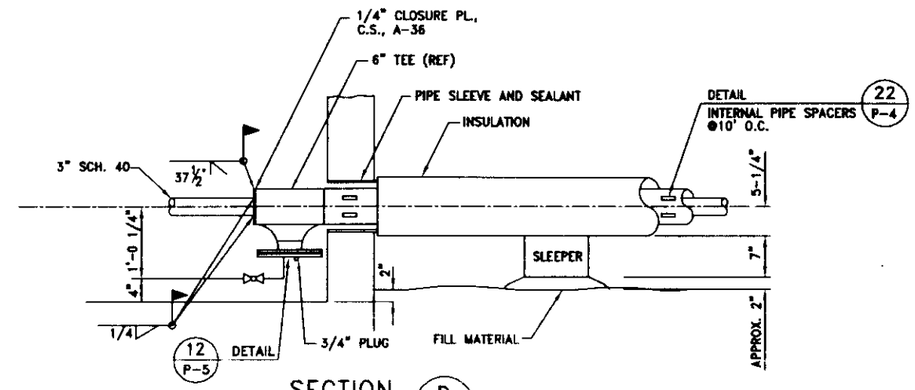

SECTION D P-6,P-7

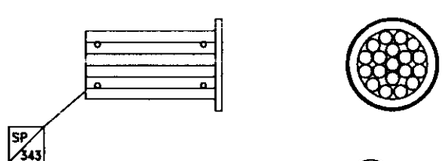

DETAIL 24 P-3
STRAIGHTENING VANE, FLANGE TYPE

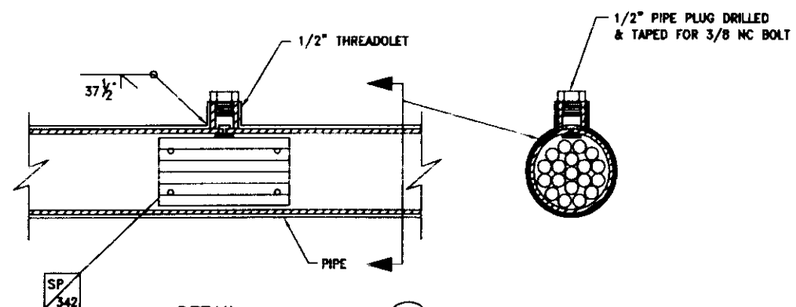

DETAIL 25 P-3
STRAIGHTENING VANE, LINE TYPE

REVISIONS			
REV	DESCRIPTION	DATE	APPROVED

PROJECT NO.S	APPROVALS		DATE
	CONST REV		
	P.M.	J.S.R.	8/99
	DES MGR	G.D.M.	8/99
DESIGN PHASE	DESIGN	A.J.C.	8/99
FINAL DESIGN	CHECKED	A.J.C.	8/99
	DRAWN	M.J.J.	2/99
APPROVED	DATE	SUBCONTRACT NO.	
		RELEASED	

PARSONS — FOR U.S. DEPARTMENT OF ENERGY, IDAHO OPERATIONS OFFICE, IDAHO FALLS, IDAHO

TAN 1611 OU 1-07B NPTF

WELLHEAD & YARD PIPING DETAILS

SIZE D — INDEX CODE NUMBER: AREA, TYPE, CL, GRID — DRAWING NO. — REV 0 — A/E DWG. NO. P-7

SCALE — SPEC CODE

ADOCS NO.

NPTF-P-7.DWG 8-4-99 10:20 am

REVISIONS			
REV	DESCRIPTION	DATE	APPROVED
1	CORRECTED NOTATION AT SEC I &T	11/15/99	

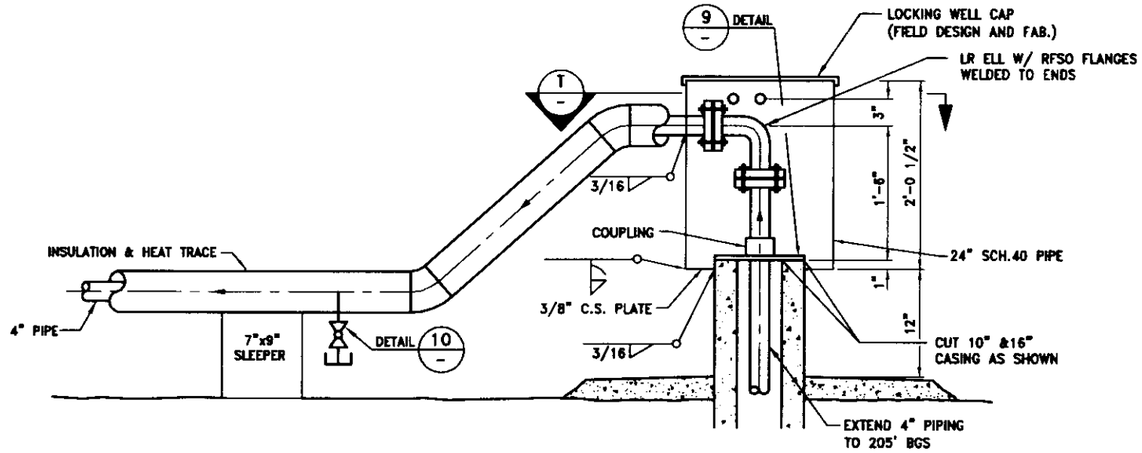

SECTION I
INJECTION WELLHEAD
NOT TO SCALE
P-3

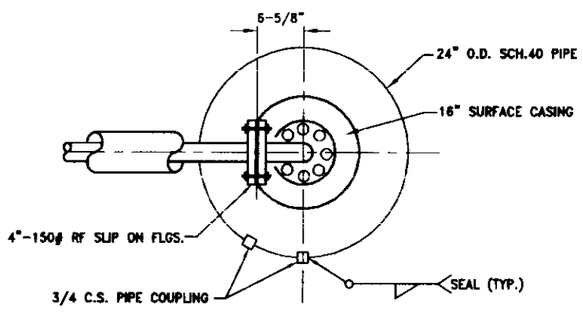

SECTION T
NPTF INJECTION WELL
WELLHEAD, NOT TO SCALE

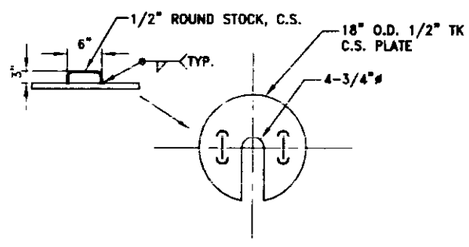

DETAIL 9
NOT TO SCALE

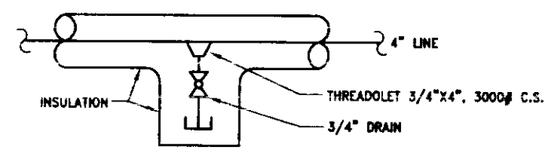

DETAIL 10
DRAIN
NOT TO SCALE

NPTF-P-8.DWG 11-15-99

		APPROVALS		DATE
PROJECT NO.S		CONST REV		
		F.H.	J.S.R.	8/99
		DES MGR	G.D.M.	8/99
DESIGN PHASE		DESIGN	A.J.C.	8/99
		CHECKED	A.J.C.	8/99
FINAL DESIGN		DRAWN	W. LIU	4/99
APPROVED	DATE	SUBCONTRACT NO.		
G.D.M.	10/99	RELEASED		

PARSONS

FOR U.S. DEPARTMENT OF ENERGY IDAHO OPERATIONS OFFICE IDAHO FALLS, IDAHO

OU 1-07B NPTF
INJECTION WELLHEAD
PIPING

SIZE D | SCALE SHOWN | REV 1 | A/E DWG. NO. P-8

ADOCS NO.

REVISIONS			
REV	DESCRIPTION	DATE	APPROVED
1	CHANGE PIPE FROM 2" TO 2 1/2"	11/11/99	

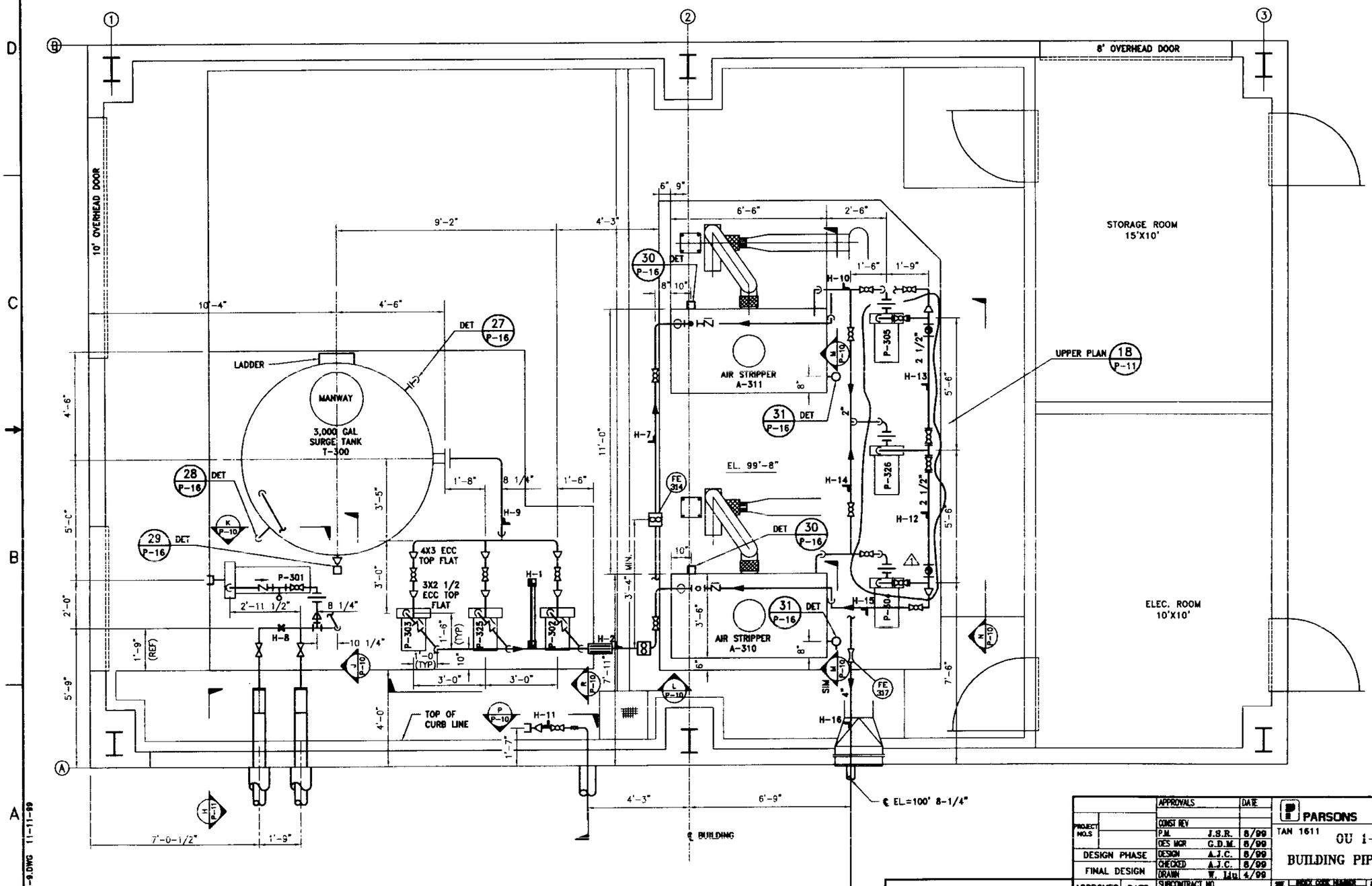

APPROVALS		DATE
CONST REV		
P.M.	J.S.R.	8/99
DES MGR	G.D.M.	8/99
DESIGN	A.J.C.	8/99
CHECKED	A.J.C.	8/99
DRAWN	W. Liu	4/99
SUBCONTRACT NO.		
RELEASED		

PROJECT NO.S

DESIGN PHASE

FINAL DESIGN

APPROVED	DATE
G.D.M.	10/99

PARSONS

FOR U.S. DEPARTMENT OF ENERGY IDAHO OPERATIONS OFFICE IDAHO FALLS, IDAHO

TAN 1611

OU 1-07B NPTF
BUILDING PIPING ARRANGEMENT

SIZE D | SCALE 1/2"=1'-0" | DRAWING NO. P-9 | REV 1

ADOCS NO.

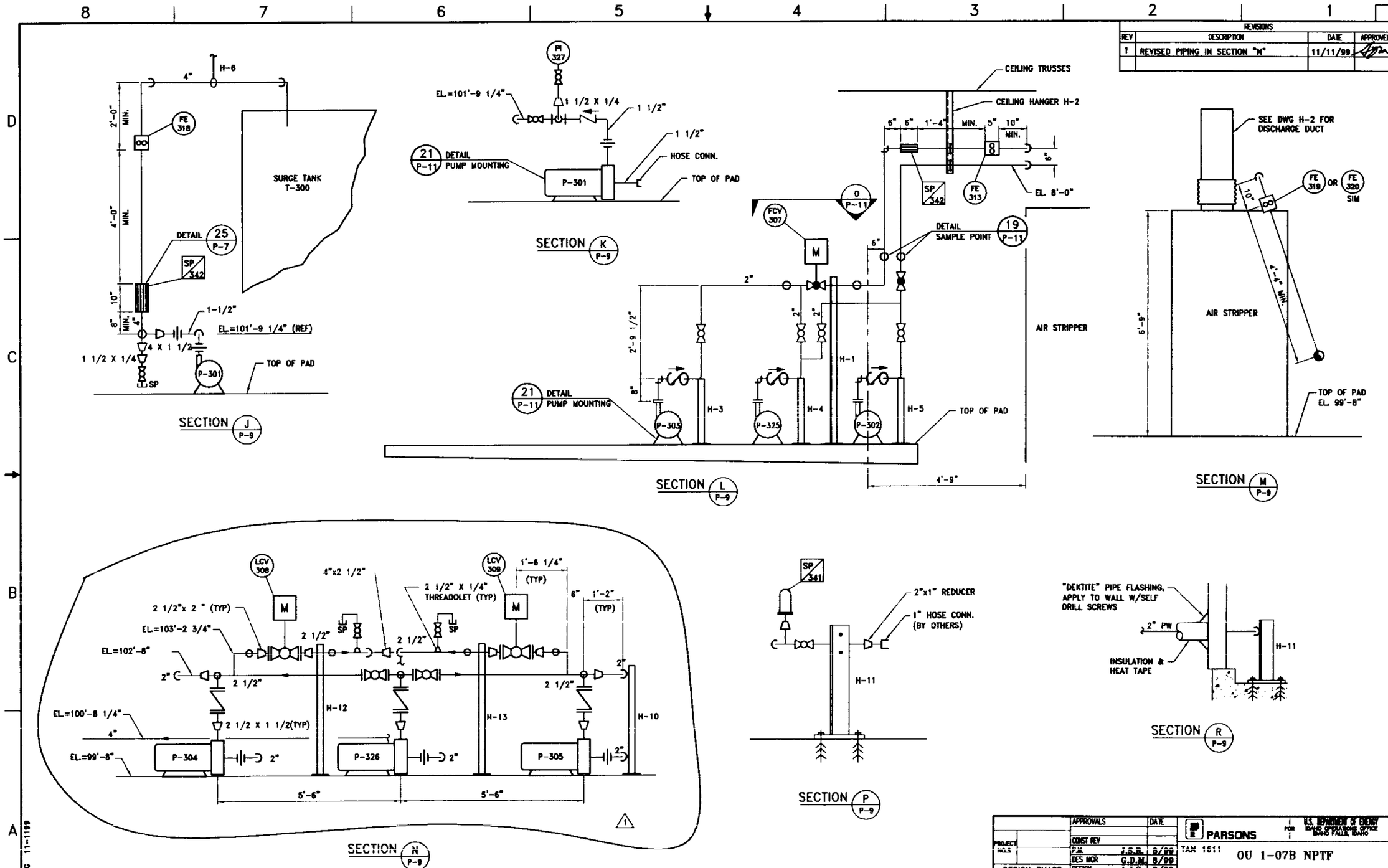

APPROVALS		DATE	
CONST REV			
P.M.	J.S.R.	8/99	
DES MGR	G.D.M.	8/99	
DESIGN	A.J.C.	8/99	
CHECKED	A.J.C.	8/99	
DRAWN	M.J.J.	2/99	
SUBCONTRACT NO.			
RELEASED			

PROJECT NO.S

DESIGN PHASE

FINAL DESIGN

APPROVED	DATE
G.D.M.	10/99

PARSONS

FOR U.S. DEPARTMENT OF ENERGY IDAHO OPERATIONS OFFICE IDAHO FALLS, IDAHO

TAN 1511

OU 1-07B NPTF

BUILDING PIPING SECTIONS

SIZE D | BLOCK CODE NUMBER AREA TYPE CL ORIG | DRAWING NO. | REV 1 | A/E DWG. NO. P-10

SCALE NONE

ADOCS NO.

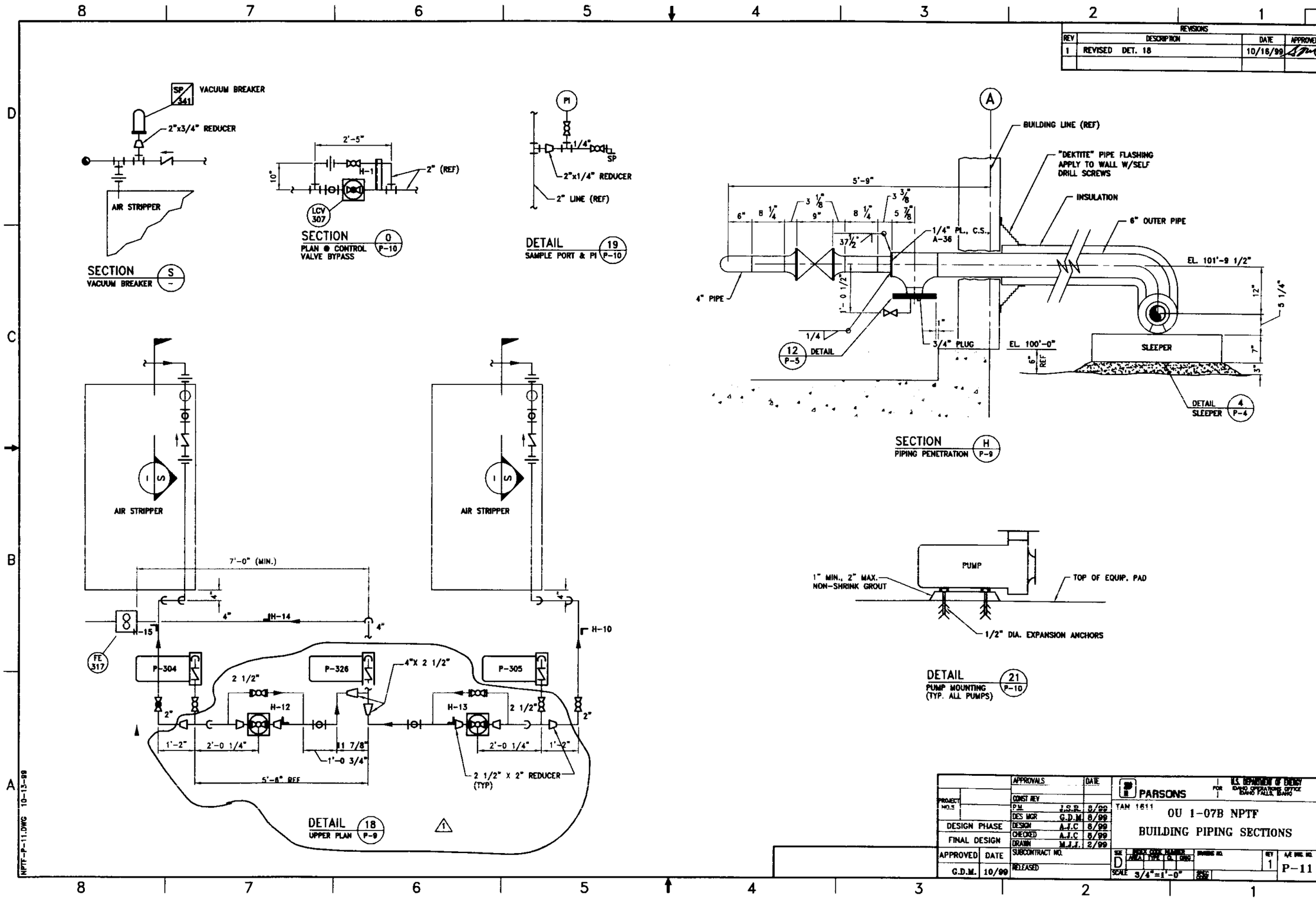

REVISIONS
REV | DESCRIPTION | DATE | APPROVED
1 | REVISED DET. 18 | 10/16/99
SP 341 VACUUM BREAKER
2"x3/4" REDUCER
AIR STRIPPER
SECTION S
VACUUM BREAKER
2'-5"
10"
H-1
2" (REF)
LCV 307
SECTION 0 P-10
PLAN @ CONTROL VALVE BYPASS
PI
1/4"
SP
2"x1/4" REDUCER
2" LINE (REF)
DETAIL 19 P-10
SAMPLE PORT & PI
A
BUILDING LINE (REF)
"DEKTITE" PIPE FLASHING APPLY TO WALL W/SELF DRILL SCREWS
INSULATION
6" OUTER PIPE
5'-9"
6"
8 1/4"
3 1/8"
9"
8 1/4"
3 3/8"
5 7/8"
37 1/2"
1/4" PL., C.S., A-36
EL. 101'-9 1/2"
4" PIPE
1'-0 1/2"
12"
5 1/4"
1/4
1"
3/4" PLUG
EL. 100'-0"
6" REF
SLEEPER
7"
3"
12 P-5 DETAIL
DETAIL 4 P-4
SLEEPER
SECTION H P-9
PIPING PENETRATION
AIR STRIPPER
AIR STRIPPER
7'-0" (MIN.)
4"
H-14
4"
H-15
H-10
FE 317
P-304
P-326
P-305
4"X 2 1/2"
2 1/2"
H-12
H-13
2 1/2"
2"
2"
1'-2"
2'-0 1/4"
1 7/8"
1'-0 3/4"
2'-0 1/4"
1'-2"
5'-6" REF
2 1/2" X 2" REDUCER (TYP)
DETAIL 18 P-9
UPPER PLAN
PUMP
1" MIN., 2" MAX. NON-SHRINK GROUT
TOP OF EQUIP. PAD
1/2" DIA. EXPANSION ANCHORS
DETAIL 21 P-10
PUMP MOUNTING (TYP. ALL PUMPS)
NPTF-P-11.DWG 10-13-99
PARSONS
U.S. DEPARTMENT OF ENERGY IDAHO OPERATIONS OFFICE IDAHO FALLS, IDAHO
TAN 1611
OU 1-07B NPTF
BUILDING PIPING SECTIONS
DESIGN PHASE
FINAL DESIGN
APPROVED G.D.M. DATE 10/99
APPROVALS DATE
CONST REV
P.M. J.S.R. 8/99
DES MGR G.D.M. 8/99
DESIGN A.J.C 8/99
CHECKED A.J.C 8/99
DRAWN M.J.J. 2/99
SUBCONTRACT NO.
RELEASED
SIZE D
SCALE 3/4"=1'-0"
REV 1
A/E DWG. NO. P-11
ADOCS NO.

REVISIONS			
REV	DESCRIPTION	DATE	APPROVED
1	REVISED DET. 32	10/15/99	[illegible]

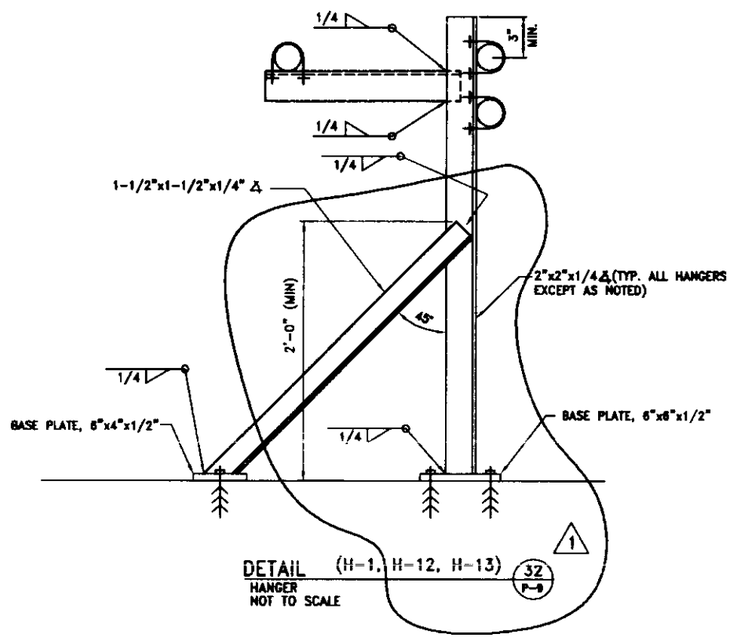

DETAIL (H-1, H-12, H-13) 32 P-9
HANGER
NOT TO SCALE

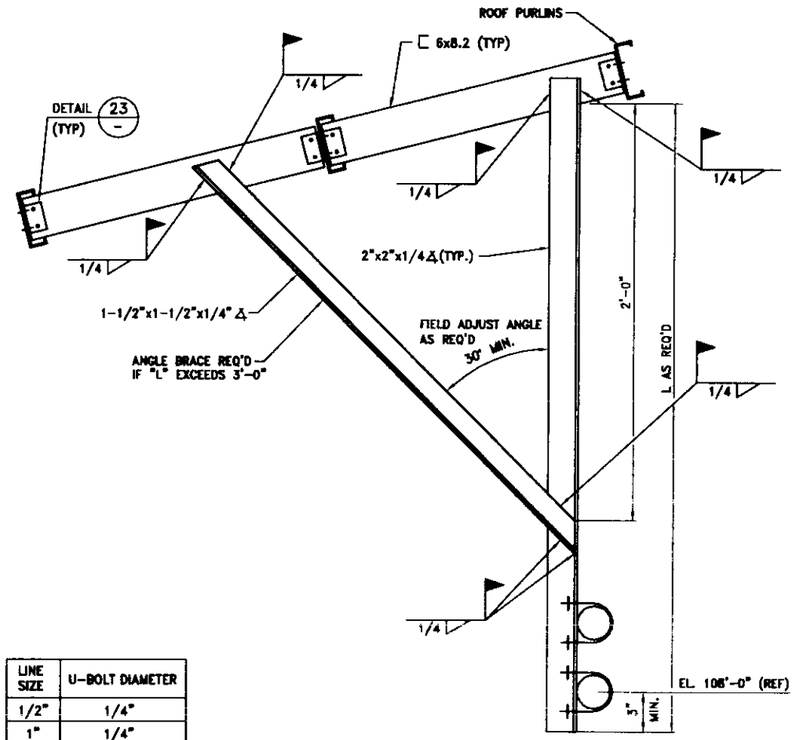

DETAIL (H-2) 33 P-9
CEILING HANGER
NOT TO SCALE

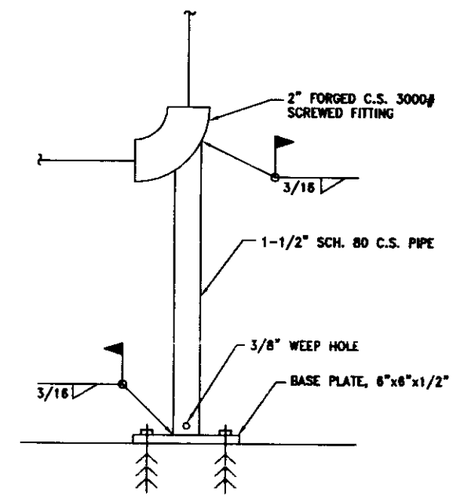

DETAIL (H-3,H-4,H-5) 34 P-10
DUMMY LEG HANGER
NOT TO SCALE

LINE SIZE	U-BOLT DIAMETER
1/2"	1/4"
1"	1/4"
1-1/2"	3/8"
2"	3/8"
2 1/2"	3/8"
3"	1/2"
4"	1/2"

TYPICAL U-BOLT SIZE
ALL HANGERS

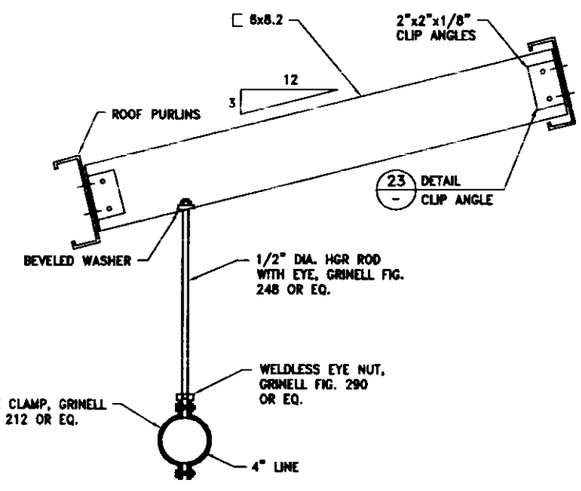

DETAIL (H-6,H-7) 35 P-10
NOT TO SCALE

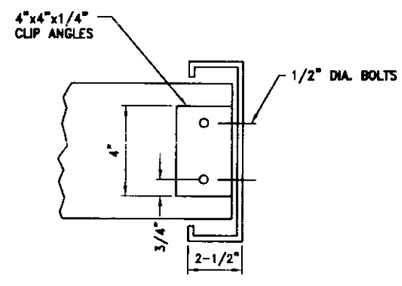

DETAIL 23

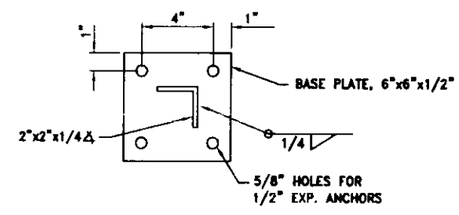

DETAIL 44
TYPICAL BASE PLATE, ALL HANGERS EXCEPT AS NOTED
NOT TO SCALE

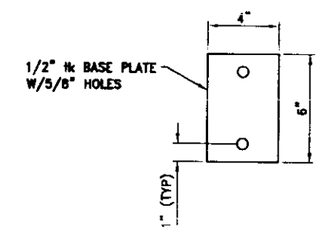

DETAIL 45 P-13
BASE PLATE
NOT TO SCALE

APPROVALS		DATE	
CONST REV			
P.M.	J.S.R.	8/99	
DES MGR	G.D.M.	8/99	
DESIGN	A.J.C.	8/99	
CHECKED	A.J.C.	8/99	
DRAWN	M.J.J.	2/99	
SUBCONTRACT NO.			
RELEASED			

PROJECT NO.S

DESIGN PHASE
FINAL DESIGN

APPROVED	DATE
G.D.M.	10/99

PARSONS
FOR U.S. DEPARTMENT OF ENERGY IDAHO OPERATIONS OFFICE IDAHO FALLS, IDAHO

TAN 1611

OU 1-07B NPTF
HANGER DETAILS

SIZE D | REV 1 | A/E DWG. NO. P-12
SCALE AS SHOWN

NPTF-P-12.DWG 10-15-99

ADOCS NO. ____

REVISIONS			
REV	DESCRIPTION	DATE	APPROVED
1	REVISED DET 39. & HANGER SCHEDULE	10/15/99	

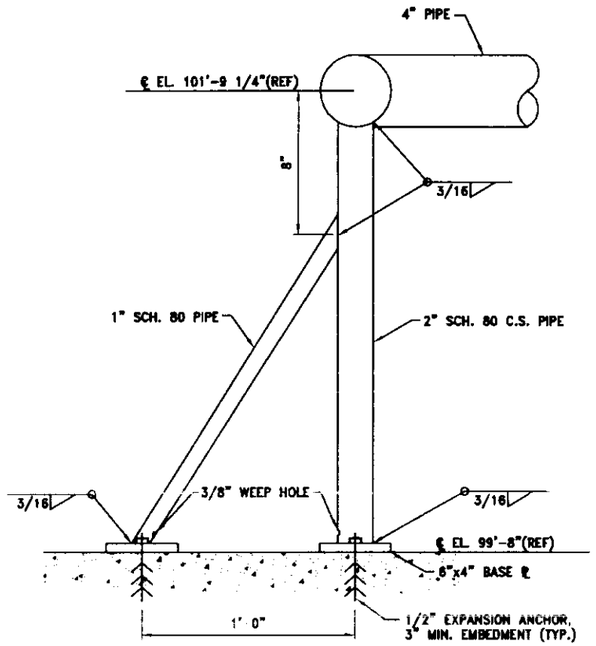

DETAIL (H-8) (36 / P-9)
ANCHOR
NOT TO SCALE

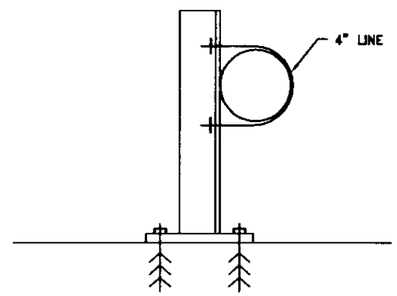

DETAIL (H-9,H-16) (37 / P-9)
HANGER
NOT TO SCALE

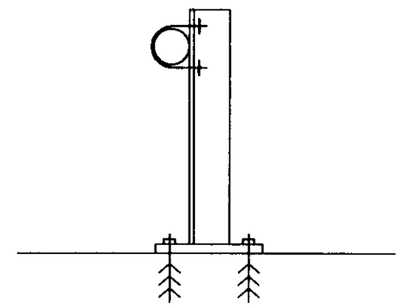

DETAIL (H-10,H-11,H-15) (38 / P-9)
HANGER
NOT TO SCALE

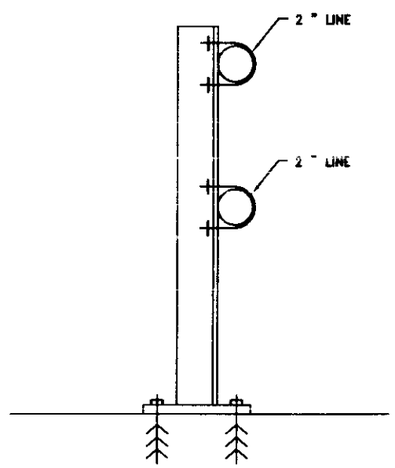

DETAIL (39 / P-9)
HANGER
NOT TO SCALE

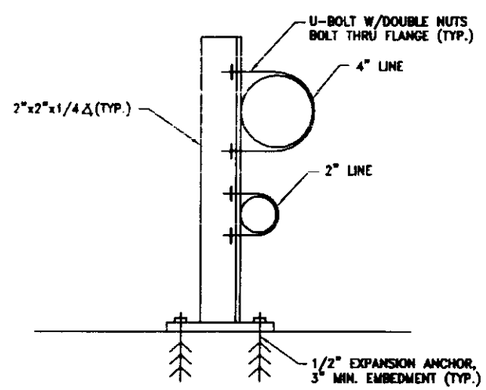

DETAIL (H-14) (40 / P-9,P-11)
HANGER
NOT TO SCALE

HANGER SCHEDULE

HANGER	REF DWG	DETAIL	BASE ℞	LOAD
H-1	P-9, P-10, P-11,	32	6x6, 6X4	
	SEC O			
H-2	P-9, P-10	33	ROOF PURLINS	150 LB
H-3	P-10	34	6x6	
H-4	P-10	34	6x6	
H-5	P-10	34	6x6	
H-6	P-10, SEC J	35	ROOF PURLINS	250 LB
H-7	P-10	35	ROOF PURLINS	150 LB
H-8	P-9	36	6X4, 6X4	
H-9	P-9	37	6X6	
H-10	P-9	38	6X6	
H-11	P-9, P-10, SEC P	38	6X6	
H-12	P-9, P-10, SEC N	32	6X6	
H-13	P-9, P-10, SEC N	32 ⚠	6X6	
H-14	P-10, P-11, SEC N	40	6X6	
	DET 18			
H-15	P-9, P-11, DET 18	38	6X6	
H-16	P-9	37	6X6	

APPROVALS		DATE
CONST REV		
P.M.	J.S.R.	8/99
DES MGR	G.D.M.	8/99
DESIGN	A.J.C.	8/99
CHECKED	A.J.C.	8/99
DRAWN	M.J.J.	2/99
SUBCONTRACT NO.		
RELEASED		

PROJECT NO.S

DESIGN PHASE

FINAL DESIGN

APPROVED	DATE
G.D.M.	10/99

PARSONS

U.S. DEPARTMENT OF ENERGY
IDAHO OPERATIONS OFFICE
IDAHO FALLS, IDAHO

TAN 1611

OU 1-07B NPTF HANGER DETAILS

SIZE D | SCALE AS SHOWN | DRAWING NO. | REV 1 | A/E DWG. NO. P-13

ADOCS NO.

NPTF-P-13.DWG 10-15-99

REVISIONS			
REV	DESCRIPTION	DATE	APPROVED
1	GENERAL REVISION	11/11/99	

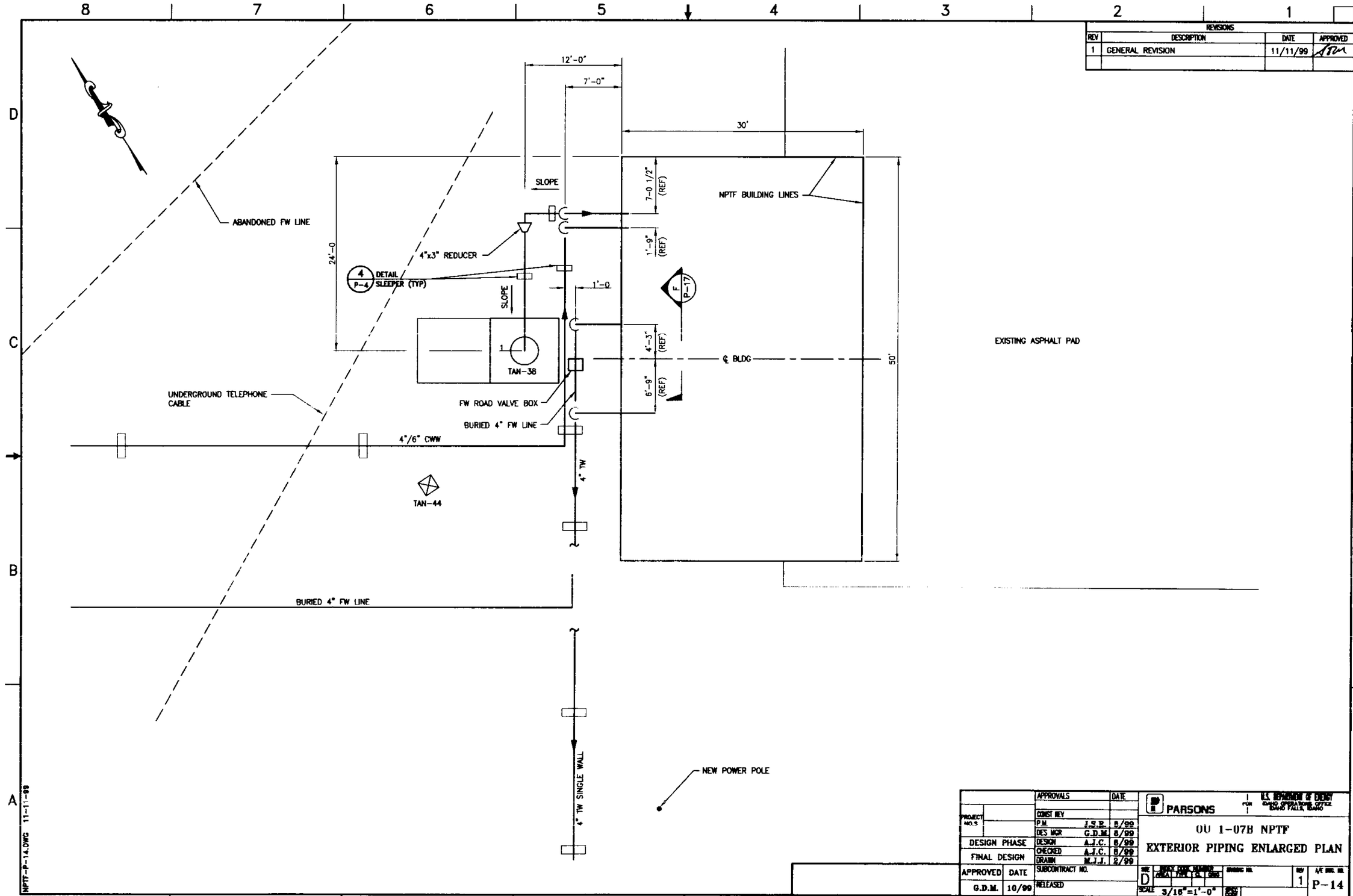

		APPROVALS		DATE
PROJECT NO.S		CONST REV		
		P.M.	J.S.D.	8/99
		DES MGR	G.D.M.	8/99
DESIGN PHASE		DESIGN	A.J.C.	8/99
FINAL DESIGN		CHECKED	A.J.C.	8/99
		DRAWN	M.J.J.	2/99
APPROVED	DATE	SUBCONTRACT NO.		
G.D.M.	10/99	RELEASED		

PARSONS

U.S. DEPARTMENT OF ENERGY
IDAHO OPERATIONS OFFICE
IDAHO FALLS, IDAHO

OU 1-07B NPTF
EXTERIOR PIPING ENLARGED PLAN

SIZE D | SCALE 3/16"=1'-0" | REV 1 | A/E DWG. NO. P-14

ADOCS NO.

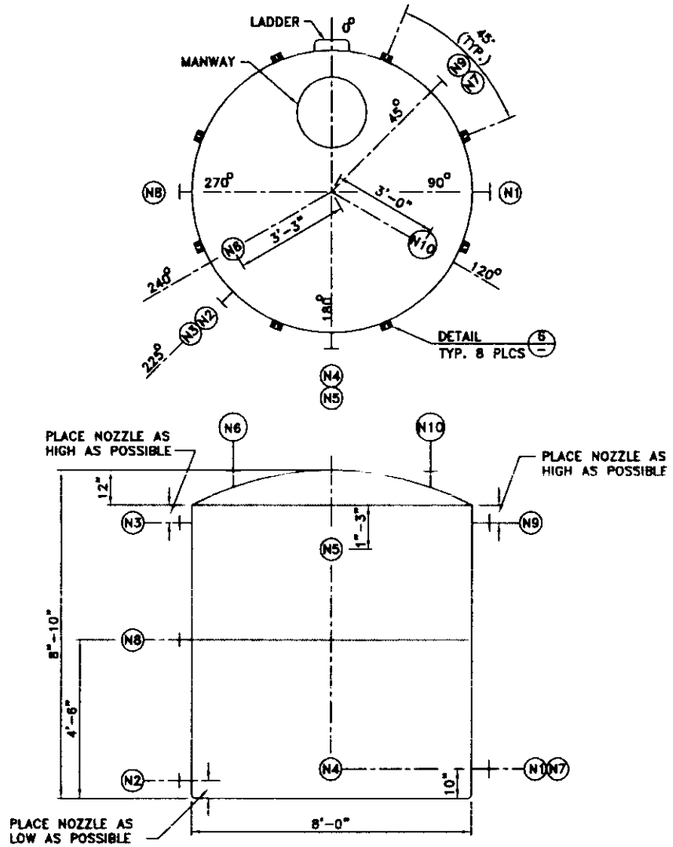

SURGE TANK 3000 GAL

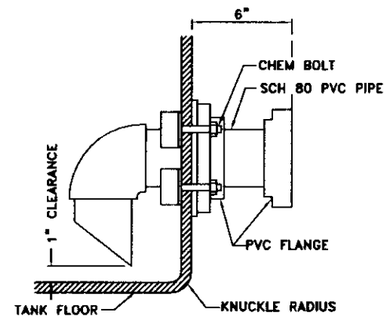

DETAIL 1
NOT TO SCALE

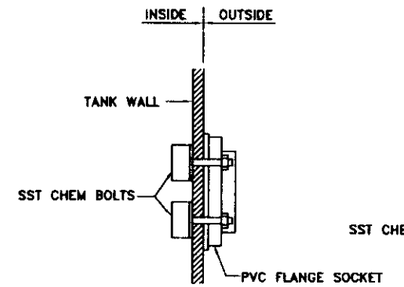

DETAIL 2
NOT TO SCALE

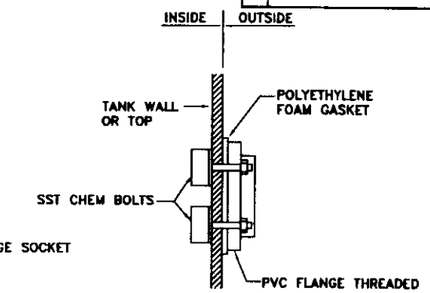

DETAIL 3
NOT TO SCALE

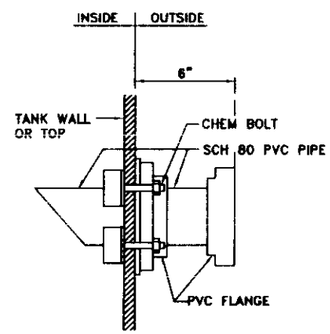

DETAIL 4
NOT TO SCALE

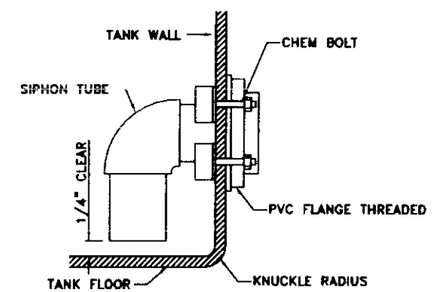

DETAIL 5
NOT TO SCALE

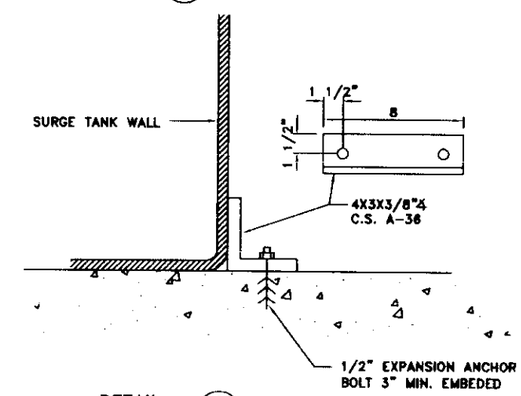

DETAIL 6
NOT TO SCALE

SURGE TANK NOZZLE SCHEDULE

NOZZLE #	SIZE	ORIENTATION	DETAIL	FITTING TYPE / MATERIAL	FUNCTION
N1	4"	90	1	FLANGED SIPHON / PVC	AIR STRIPPER FEED PUMP INLET
N2	1 1/2"	225	2	SOCKET BULKHEAD / PVC	SIGHT GLASS, LOWER
N3	1 1/2"	225	2	SOCKET BULKHEAD / PVC	SIGHT GLASS, UPPER
N4	1 1/2"	180	3	THREADED BULKHEAD / PVC	LSL 306, LOWER
N5	1 1/2"	180	3	THREADED BULKHEAD / PVC	LSH 306, UPPER
N6	4"	240	4	FLANGED BULKHEAD / PVC	TANK INLET
N7	2"	270	5	THREADED SIPHON / PVC	TANK DRAIN
N8	1 1/2"	270	3	THREADED BULKHEAD / PVC	SPARE
N9	4"	45	4	FLANGED BULKHEAD / PVC	TANK OVERFLOW
N10	2"	120	3	THREADED BULKHEAD / PVC	LT 307

REVISIONS

REV	DESCRIPTION	DATE	APPROVED

APPROVALS		DATE
CONST REV		
P.M.	J.S.R.	8/99
DES MGR	G.D.M.	8/99
DESIGN	A.J.C.	8/99
CHECKED	A.J.C.	8/99
DRAWN	W.S.L.	2/99
SUBCONTRACT NO.		
RELEASED		

PROJECT NO.S

DESIGN PHASE

FINAL DESIGN

APPROVED | DATE: 10/5/99

PARSONS

FOR U.S. DEPARTMENT OF ENERGY IDAHO OPERATIONS OFFICE IDAHO FALLS, IDAHO

TAN 1511

OU 1-07B NPTF

SURGE TANK PLAN AND DETAILS

SIZE D | SCALE 1"=30' | DRAWING NO. | REV 0 | A/E DWG. NO. P-15

ADOCS NO.

NPTF-P-15.DWG 8-4-99 3:00 PM

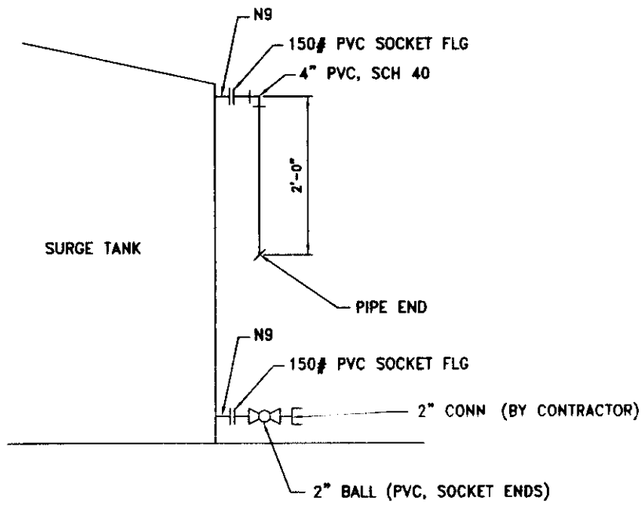

DETAIL 27 / P-9
OVERFLOW & DRAIN

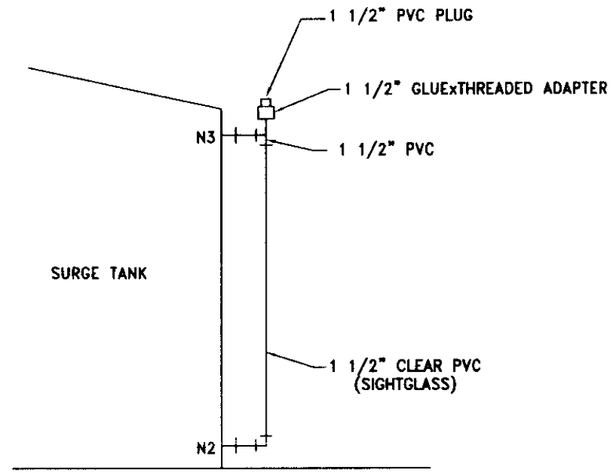

DETAIL 28 / P-9
SIGHTGLASS

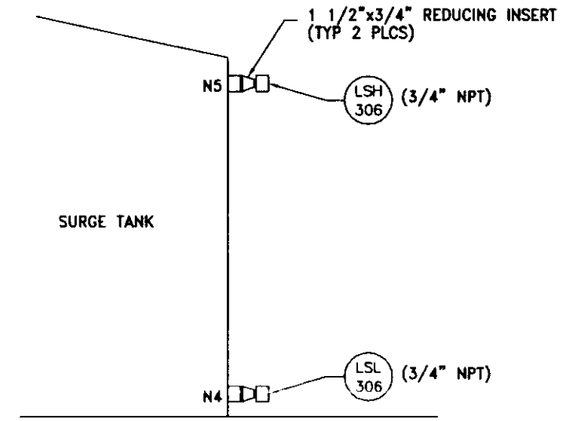

DETAIL 29 / P-9

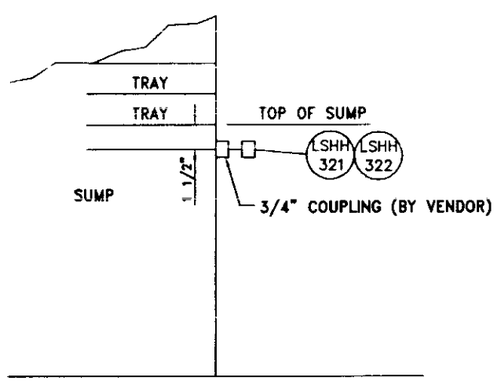

DETAIL 30 / P-9

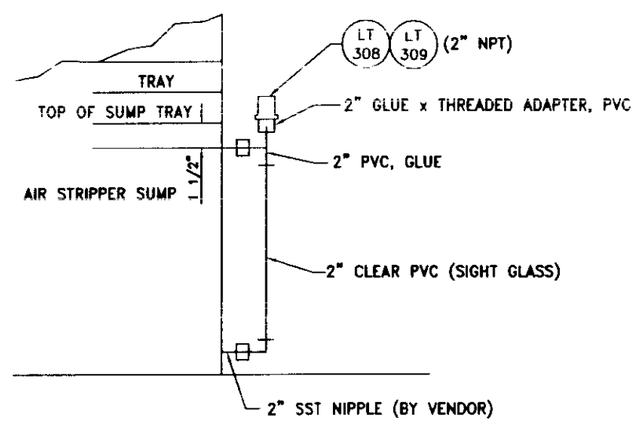

DETAIL 31 / P-9

REV	DESCRIPTION	DATE	APPROVED

REVISIONS

APPROVALS		DATE
CONST REV		
PM	J.S.R.	6/99
DES MGR	G.D.M.	6/99
DESIGN	A.J.C.	6/99
CHECKED	A.J.C.	6/99
DRAWN	M.J.J.	2/99
SUBCONTRACT NO.		
RELEASED		

PROJECT NO.S

DESIGN PHASE

FINAL DESIGN

APPROVED | DATE

PARSONS

U.S. DEPARTMENT OF ENERGY IDAHO OPERATIONS OFFICE IDAHO FALLS, IDAHO

TAN 1611

OU 1-07B NPTF
MISCELLANEOUS PIPING DETAILS

SIZE D | SCALE - | REV 0 | A/E DWG. NO. P-16

ADOCS NO.

NPTF-P-16.DWG 8-4-99 11:50 AM

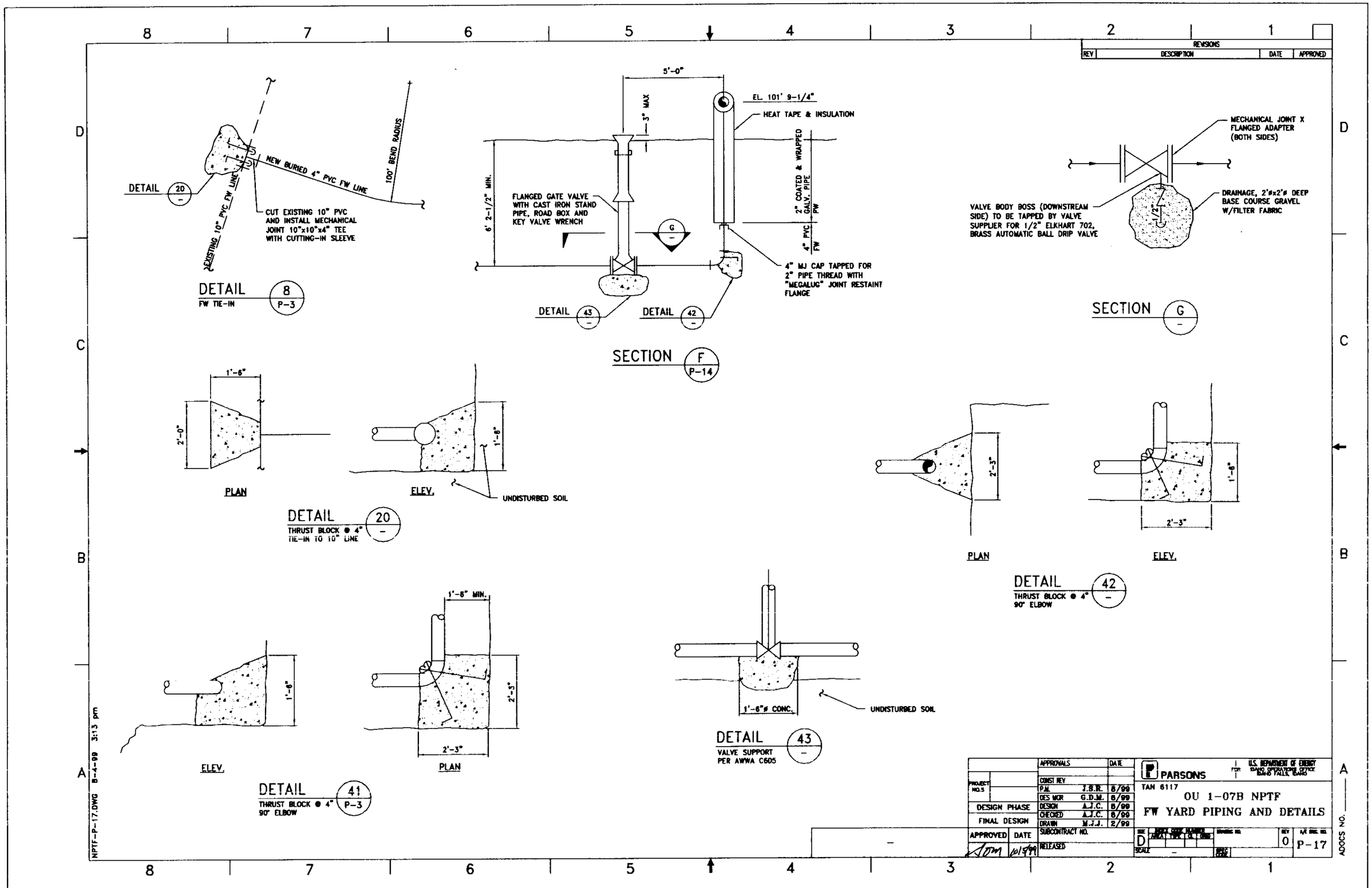

REVISIONS
REV
DESCRIPTION
DATE
APPROVED
DETAIL 20
NEW BURIED 4" PVC FW LINE
100' BEND RADIUS
EXISTING 10" PVC FW LINE
CUT EXISTING 10" PVC AND INSTALL MECHANICAL JOINT 10"x10"x4" TEE WITH CUTTING-IN SLEEVE
DETAIL 8 P-3
FW TIE-IN
5'-0"
3" MAX
EL. 101' 9-1/4"
HEAT TAPE & INSULATION
6' 2-1/2" MIN.
FLANGED GATE VALVE WITH CAST IRON STAND PIPE, ROAD BOX AND KEY VALVE WRENCH
2" COATED & WRAPPED GALV. PIPE
4" PVC FW
4" MJ CAP TAPPED FOR 2" PIPE THREAD WITH "MEGALUG" JOINT RESTAINT FLANGE
DETAIL 43
DETAIL 42
SECTION F P-14
MECHANICAL JOINT X FLANGED ADAPTER (BOTH SIDES)
VALVE BODY BOSS (DOWNSTREAM SIDE) TO BE TAPPED BY VALVE SUPPLIER FOR 1/2" ELKHART 702, BRASS AUTOMATIC BALL DRIP VALVE
DRAINAGE, 2'øx2'ø DEEP BASE COURSE GRAVEL W/FILTER FABRIC
1/2"
SECTION G
1'-6"
2'-0"
PLAN
ELEV.
UNDISTURBED SOIL
DETAIL 20
THRUST BLOCK @ 4" TIE-IN TO 10" LINE
2'-3"
PLAN
ELEV.
DETAIL 42
THRUST BLOCK @ 4" 90° ELBOW
1'-6" MIN.
2'-3"
ELEV.
PLAN
DETAIL 41 P-3
THRUST BLOCK @ 4" 90° ELBOW
1'-6"ø CONC.
UNDISTURBED SOIL
DETAIL 43
VALVE SUPPORT PER AWWA C605
NPTF-P-17.DWG 8-4-99 3:13 pm
APPROVALS
DATE
CONST REV
P.M. J.S.R. 8/99
DES MGR G.D.M. 8/99
DESIGN A.J.C. 8/99
CHECKED A.J.C. 8/99
DRAWN M.J.J. 2/99
SUBCONTRACT NO.
RELEASED
PROJECT NO.S
DESIGN PHASE
FINAL DESIGN
APPROVED
DATE
PARSONS
U.S. DEPARTMENT OF ENERGY IDAHO OPERATIONS OFFICE IDAHO FALLS, IDAHO
TAN 6117
OU 1-07B NPTF
FW YARD PIPING AND DETAILS
SIZE D
SCALE
REV 0
A/E DWG. NO. P-17
ADOCS NO.

REVISIONS			
REV	DESCRIPTION	DATE	APPROVED
1	REMOVED P-33 FROM SCHEDULE	11/15/99	

PUMP SCHEDULE

Unit No.	Service	Type	Fluid pumped	Max Fluid Temp(°F)	GPM @ft head	NPSH Available (FT)	InletXOutlet size	Motor HP	Motor Volts/Ph/Hz	Motor Type	Pump WT	Manufacturer/Model No.	Remarks
P-38	Well pump	Submersible	Water	55 °F	100@ 290 ft	32	3" Outlet	10	480/3/60	NEMA 3R	154 lb	Grundfos / 80S100-10	SST constructiuon, No check valve
P-39	Well pump	Submersible	Water	55 °F	100@ 290 ft	32	3" Outlet	10	480/3/60	NEMA 3R	154 lb	Grundfos / 80S100-10	SST constructiuon, No check valve
P-40	Well pump	Submersible	Water	55 °F	100@ 260 ft	32	3" Outlet	10	480/3/60	NEMA 3R	154 lb	Grundfos / 135S100-6(10hp)	SST constructiuon, No check valve
P-301	Transfer pump	Single stage centrifugal	Water	100 °F	30@ 110ft	20	1 1/2" X 1 1/2"	2	480/3/60	TEFC	74 lb	Meyers Model QP20-3, Famillian N.W.	
P-302	Air stripper feed pump	Single stage centrifugal	Water	100 °F	125@ 65ft	26	2 1/2" X 2"	5	480/3/60	TEFC	206 lb	Peerless model C1020M, Famillian N.W.	Mechanical shaft seal, Bronze fit, 9" impeller 1750 RPM
P-303	Air stripper feed pump	Single stage centrifugal	Water	100 °F	125@ 65ft	26	2 1/2" X 2"	5	480/3/60	TEFC	206 lb	Peerless model C1020M, Famillian N.W.	Mechanical shaft seal, Bronze fit, 9" impeller 1750 RPM
P-304	Discharge pump	Single stage centrifugal	Water	100 °F	125@ 105ft	22	2" X 1 1/2"	5	480/3/60	TEFC	143 lb	Peerless model C615J, Famillian N.W	Mechanical shaft seal, Bronze fit, 5 1/2"factory trimmed impeller, 3500 RPM
P-305	Discharge pump	Single stage centrifugal	Water	100 °F	125@ 105ft	22	2" X 1 1/2"	5	480/3/60	TEFC	143 lb	Peerless model C615J, Famillian N.W.	Mechanical shaft seal, Bronze fit, 5 1/2"factory trimmed impeller, 3500 RPM
P-325	Air stripper feed pump	Single stage centrifugal	Water	100 °F	125@ 65ft	26	2 1/2" X 2"	5	480/3/60	TEFC	206 lb	Peerless model C1020M, Famillian N.W.	Mechanical shaft seal, Bronze fit, 9" impeller 1750 RPM
P-326	Discharge pump	Single stage centrifugal	Water	100 °F	125@ 105ft	22	2" X 1 1/2"	5	480/3/60	TEFC	143 lb	Peerless model C615J, Famillian N.W.	Mechanical shaft seal, Bronze fit, 5 1/2"factory trimmed impeller, 3500 RPM
P-327	Sump pump	Single stage centrifugal	Water	100 °F	10@ 12ft	26	1 1/4" outlet	1/4	115/1/60	Wash Down	7lb	Grundfos model EF25	Float switch not required

NPTF P-18.DWG 11-15-99

APPROVALS		DATE
CONST REV		
P.M.	J.S.R.	8/99
DES MGR	G.D.M.	8/99
DESIGN	A.J.C.	8/99
CHECKED	A.J.C.	8/99
DRAWN	G.D.M.	3/99
SUBCONTRACT NO.		
RELEASED		

PROJECT NO.S

DESIGN PHASE

FINAL DESIGN

APPROVED	DATE
G.D.M.	10/99

PARSONS

FOR U.S. DEPARTMENT OF ENERGY IDAHO OPERATIONS OFFICE IDAHO FALLS, IDAHO

TAN 1611 OU 1-07B NPTF

PUMP SCHEDULE

SIZE D | SCALE NONE | REV 1 | A/E DWG. NO. P-18

ADOCS NO.

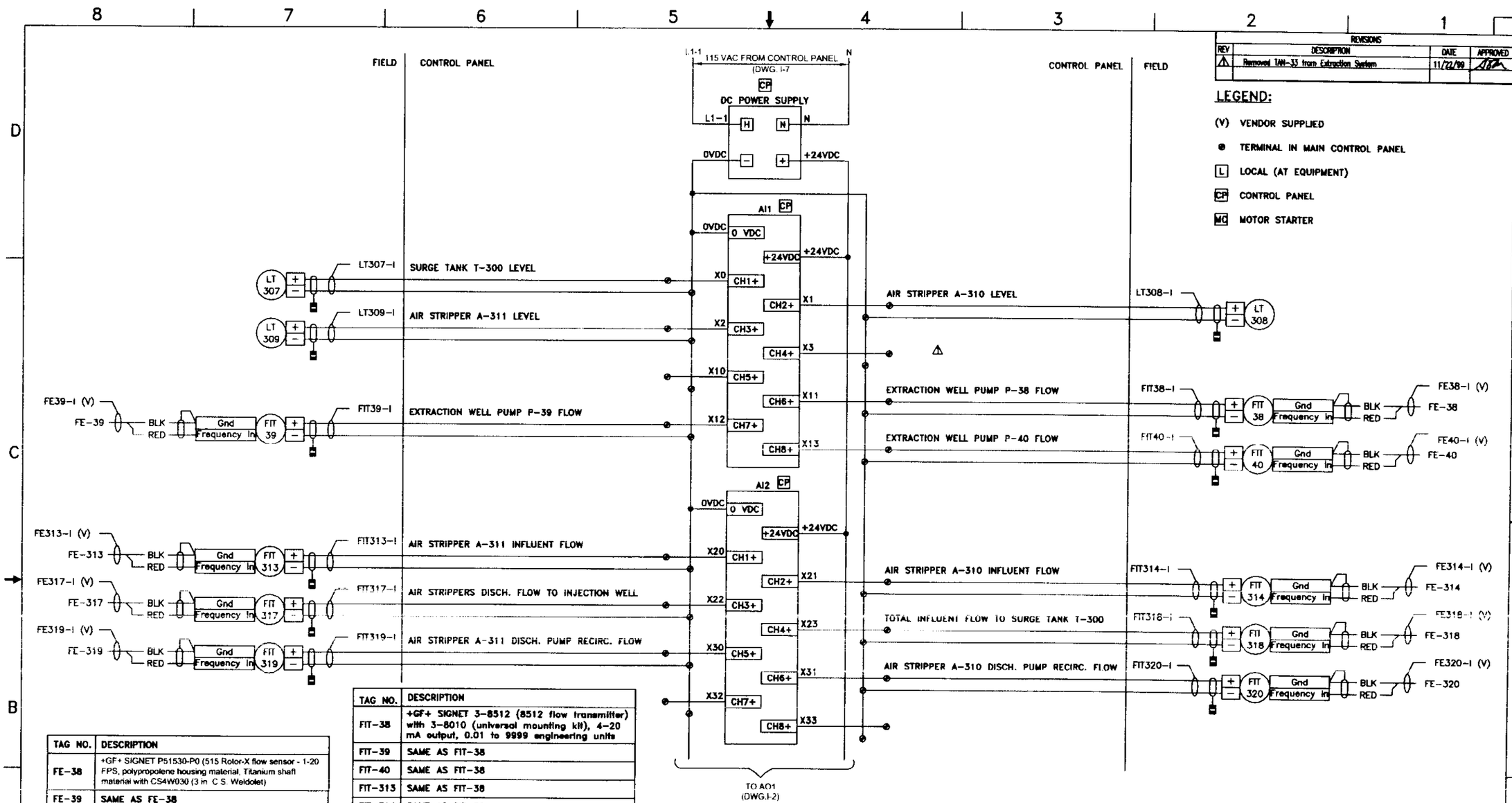

REV	DESCRIPTION	DATE	APPROVED
1	Removed TAN-33 from Extraction System	11/22/99	

LEGEND:

- (V) VENDOR SUPPLIED
- ● TERMINAL IN MAIN CONTROL PANEL
- L LOCAL (AT EQUIPMENT)
- CP CONTROL PANEL
- MC MOTOR STARTER

TAG NO.	DESCRIPTION
FE-38	+GF+ SIGNET P51530-P0 (515 Rotor-X flow sensor - 1-20 FPS, polypropolene housing material, Titanium shaft material with CS4W030 (3 in. C.S. Weldolet)
FE-39	SAME AS FE-38
FE-40	SAME AS FE-38
FE-313	SAME AS FE-38 EXCEPT CS4T020 (2 in. C.S. Tee)
FE-314	SAME AS FE-313
FE-317	SAME AS FE-38 EXCEPT CS4W040 (4 in. C.S. Weldolet)
FE-318	SAME AS FE-317
FE-319	SAME AS FE-313
FE-320	SAME AS FE-313

TAG NO.	DESCRIPTION
FIT-38	+GF+ SIGNET 3-8512 (8512 flow transmitter) with 3-8010 (universal mounting kit), 4-20 mA output, 0.01 to 9999 engineering units
FIT-39	SAME AS FIT-38
FIT-40	SAME AS FIT-38
FIT-313	SAME AS FIT-38
FIT-314	SAME AS FIT-38
FIT-317	SAME AS FIT-38
FIT-318	SAME AS FIT-38
FIT-319	SAME AS FIT-38
FIT-320	SAME AS FIT-38
LT-307	Flowline LU20-5001 (Ultrasonic level transmitter, 2" NPT connection, range 0.5 to 18 feet, 8 degree conical beam, 4-20 mA output
LT-308	SAME AS LT-307
LT-309	SAME AS LT-307

APPROVALS		DATE
CONST REV		
P.E.	J.R.	8/99
DES MGR	G.D.M.	8/99
DESIGN	S.S.	3/99
CHECKED	G.D.M.	3/99
DRAWN	S.S.	3/99
SUBCONTRACT NO.		
RELEASED		

PROJECT NO.S

DESIGN PHASE

FINAL DESIGN

APPROVED G.D.M. DATE 10/99

PARSONS

U.S. DEPARTMENT OF ENERGY IDAHO OPERATIONS OFFICE IDAHO FALLS, IDAHO

TAN 1611

OU 1-07B NPTF ANALOG INPUTS I/O DIAGRAM

SIZE D | SCALE NONE | REV 1 | A/E DWG. NO. I-1

ADOCS NO.

NPTF I-1.DWG 11/22/99

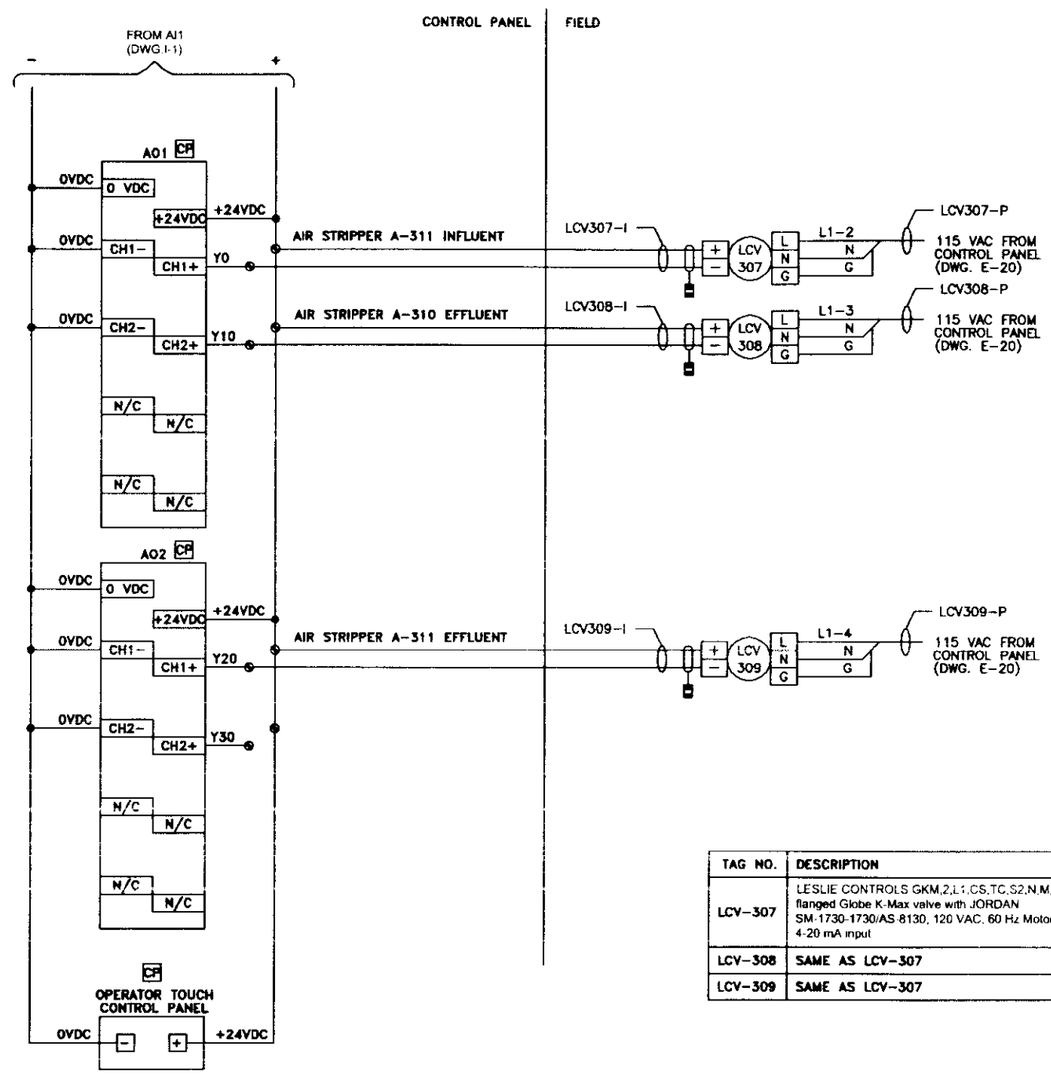

TAG NO.	DESCRIPTION
LCV-307	LESLIE CONTROLS GKM,2,L1,CS,TC,S2,N,M,1 2" 150# flanged Globe K-Max valve with JORDAN SM-1730-1730/AS-8130, 120 VAC, 60 Hz Motor actuator & 4-20 mA input
LCV-308	SAME AS LCV-307
LCV-309	SAME AS LCV-307

REVISIONS

REV	DESCRIPTION	DATE	APPROVED

LEGEND:

(V) VENDOR SUPPLIED

● TERMINAL IN MAIN CONTROL PANEL

L LOCAL (AT EQUIPMENT)

CP CONTROL PANEL

MC MOTOR STARTER

APPROVALS		DATE
CONST REV		
P.M.	J.R.	8/99
DES MGR	G.D.M.	8/99
DESIGN	S.S.	3/99
CHECKED	G.D.M.	3/99
DRAWN	S.S.	3/99
SUBCONTRACT NO.		
RELEASED		

PROJECT NO.S

DESIGN PHASE

FINAL DESIGN

APPROVED DATE

10/5/99

PARSONS

U.S. DEPARTMENT OF ENERGY IDAHO OPERATIONS OFFICE IDAHO FALLS, IDAHO

TAN 1611

OU 1-07B NPTF ANALOG OUTPUTS I/O DIAGRAM

SIZE D | REV 0 | A/E DWG. NO. I-2

SCALE NONE

ADOCS NO.

NPTF I-2.DWG 8-5-99 8:00AM

REVISIONS			
REV	DESCRIPTION	DATE	APPROVED
1	Removed TAN-33 from Extraction System	12/14/98	[signature]

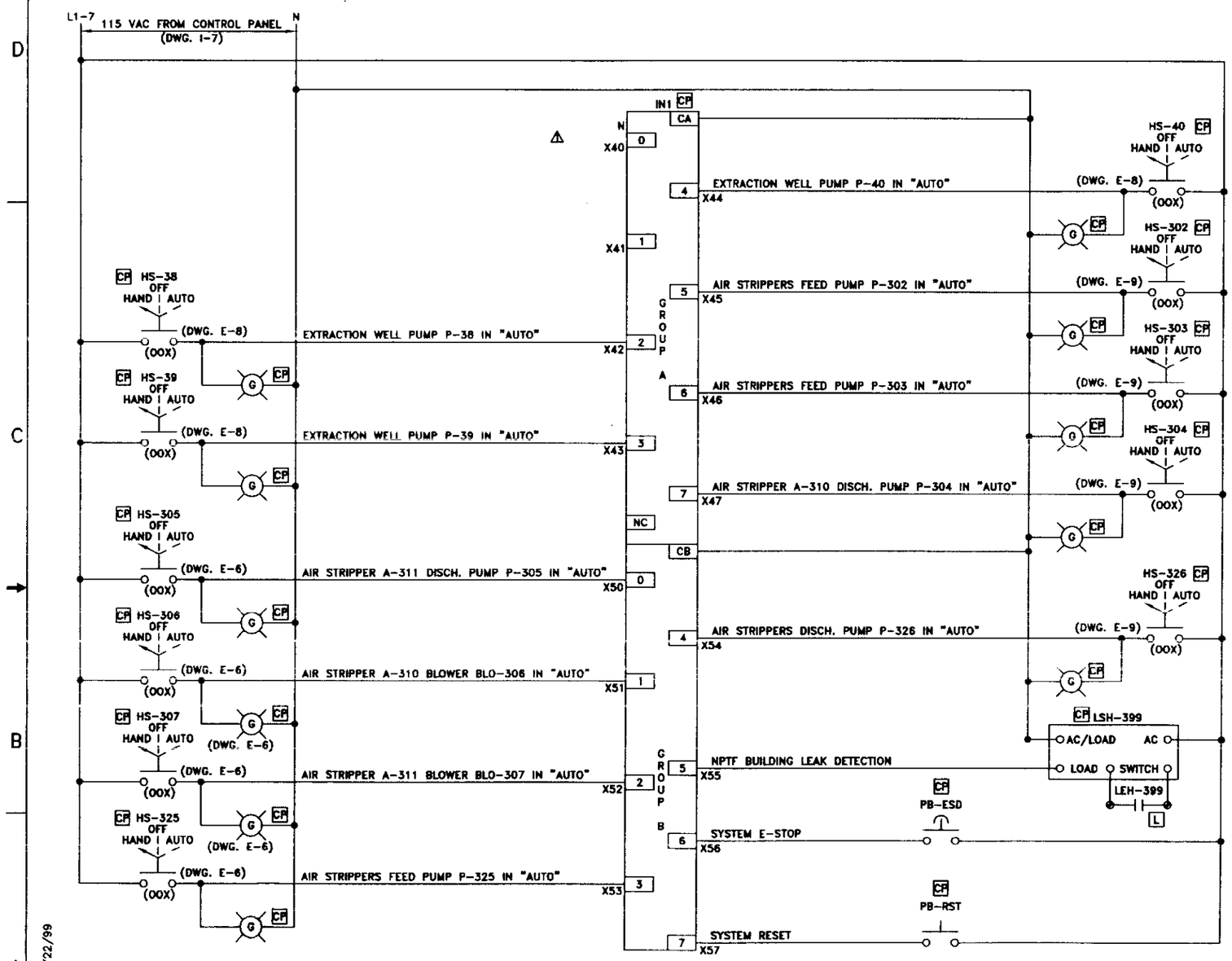

LEGEND:

(V) VENDOR SUPPLIED

● TERMINAL IN MAIN CONTROL PANEL

L LOCAL (AT EQUIPMENT)

CP CONTROL PANEL

MC MOTOR STARTER

TAG NO.	DESCRIPTION
LE-399	GEMS 43760 LS-270 liquid sensor with 24" cable

NPTF I-3.DWG 11/22/99

PROJECT NO.S	APPROVALS		DATE
	CONST REV		
	P.M.	J.R.	8/99
	DES MGR	G.D.M.	8/99
DESIGN PHASE	DESIGN	S.S.	3/99
FINAL DESIGN	CHECKED	G.D.M.	3/99
	DRAWN	S.S.	3/99
APPROVED	DATE	SUBCONTRACT NO.	
G.D.M.	10/99	RELEASED	

PARSONS

FOR U.S. DEPARTMENT OF ENERGY IDAHO OPERATIONS OFFICE IDAHO FALLS, IDAHO

TAN 1611 OU 1-07B NPTF
AC INPUTS SHEET 1
I/O DIAGRAM

SIZE D | INDEX CODE NUMBER | DRAWING NO. | REV 1 | A/E DWG. NO. I-3

SCALE NONE

ADOCS NO.

REVISIONS			
REV	DESCRIPTION	DATE	APPROVED
1	Removed TAN-33 from Extraction System	11/22/99	[signature]

LEGEND:

(V) VENDOR SUPPLIED

⊕ TERMINAL IN MAIN CONTROL PANEL

L LOCAL (AT EQUIPMENT)

CP CONTROL PANEL

MC MOTOR STARTER

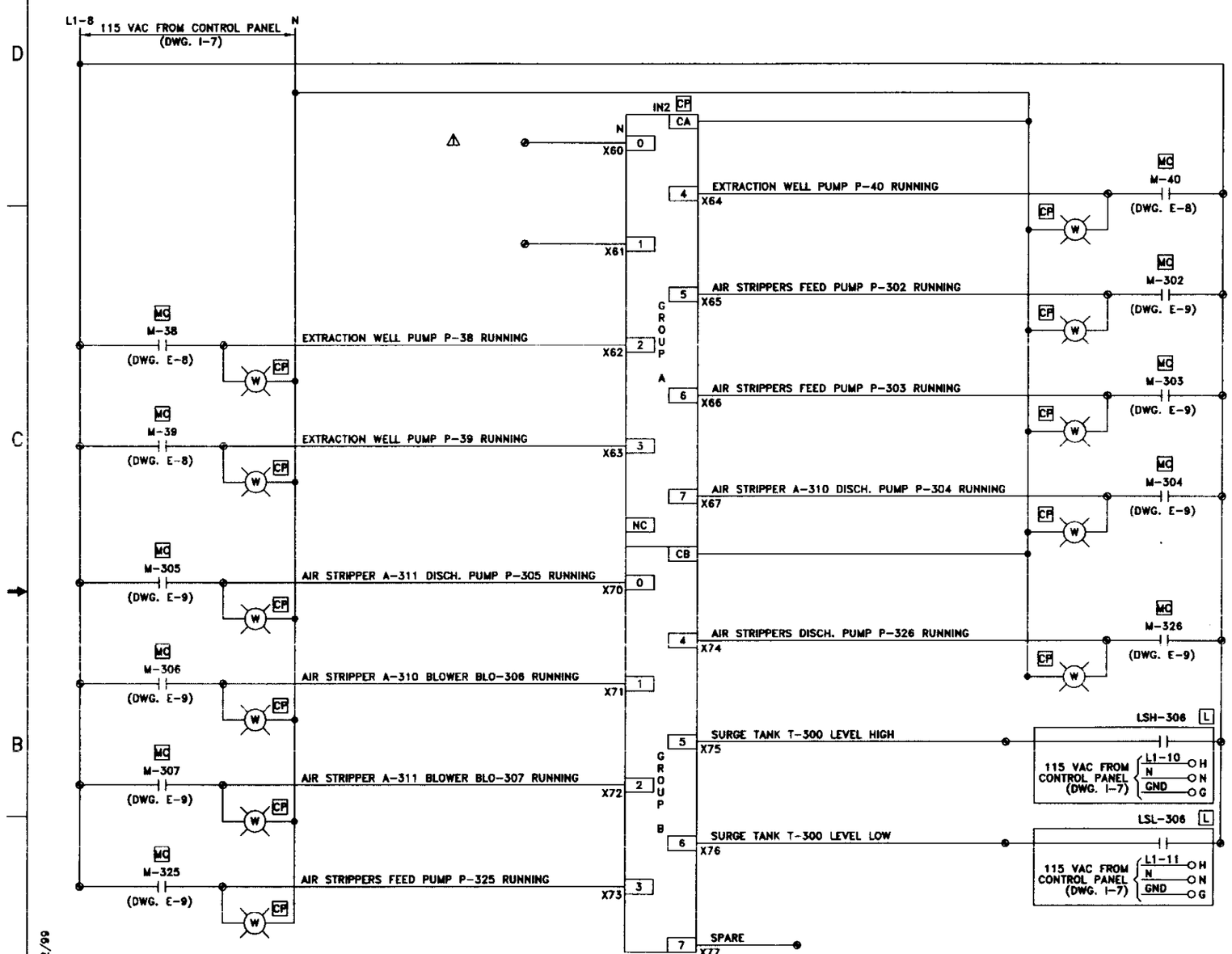

TAG NO.	DESCRIPTION
LSH-306	Flowline AS13-1120 Switch Pro capacitance level switch, SPDT contact, requires 120 VAC, .25 A
LSL-306	SAME AS LSH-306

PROJECT NO.S	APPROVALS		DATE
	CONST REV		
	P.M.	J.R.	8/99
	DES MGR	G.D.M.	8/99
DESIGN PHASE	DESIGN	S.S.	3/99
FINAL DESIGN	CHECKED	G.D.M.	3/99
	DRAWN	S.S.	3/99
APPROVED	DATE	SUBCONTRACT NO.	
G.D.M.	10/99	RELEASED	

PARSONS

U.S. DEPARTMENT OF ENERGY IDAHO OPERATIONS OFFICE IDAHO FALLS, IDAHO

TAN 1611 OU 1-07B NPTF AC INPUTS SHEET 2 I/O DIAGRAM

SIZE D | INDEX CODE NUMBER | DRAWING NO. | REV 1 | A/E DWG. NO. I-4

SCALE NONE

NPTF I-4.DWG 11/22/99

ADOCS NO.

REVISIONS			
REV	DESCRIPTION	DATE	APPROVED
1	Removed TAN-33 from Extraction System	11/22/98	

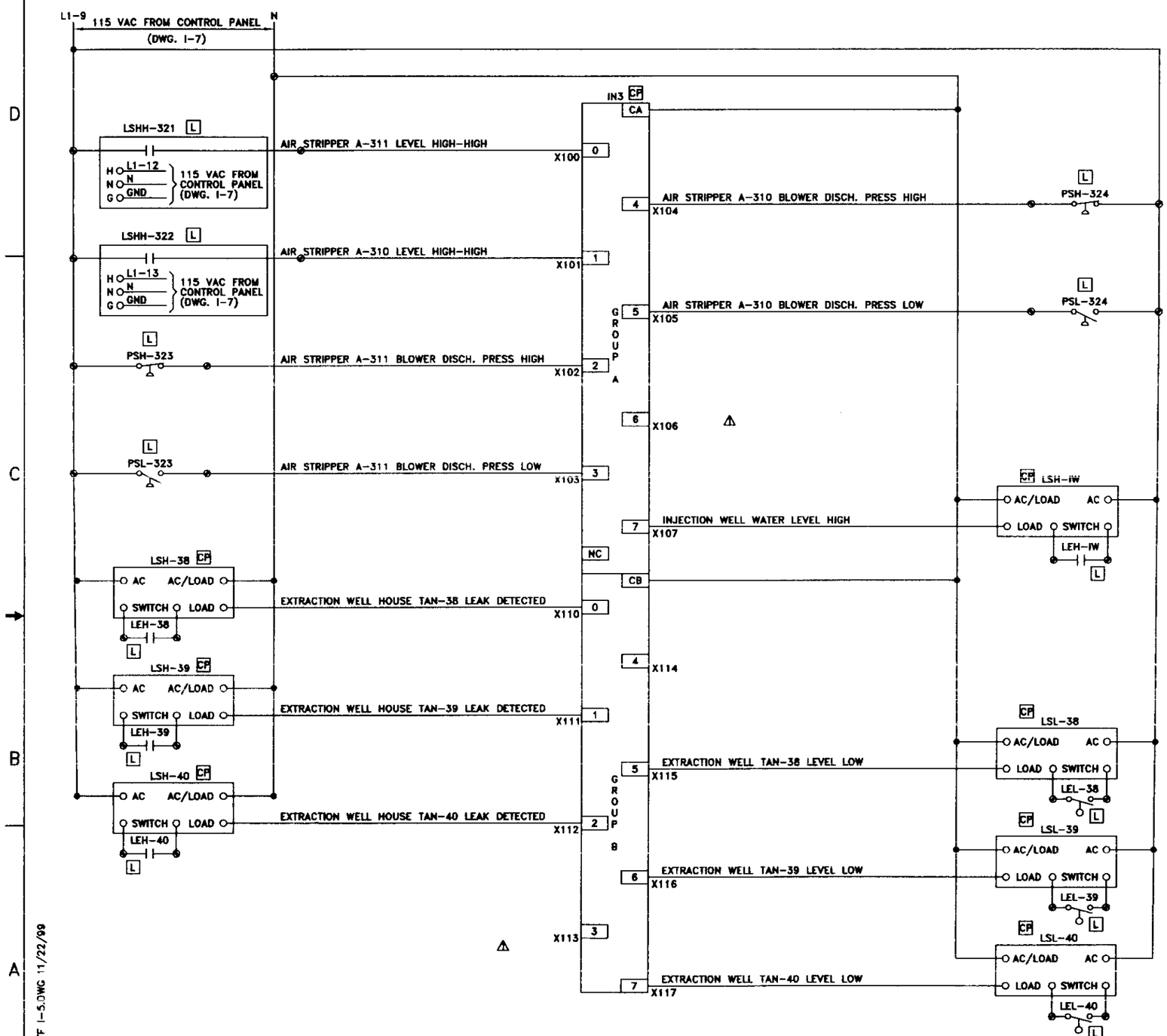

LEGEND:

(V) VENDOR SUPPLIED

● TERMINAL IN MAIN CONTROL PANEL

[L] LOCAL (AT EQUIPMENT)

[CP] CONTROL PANEL

[MC] MOTOR STARTER

TAG NO.	DESCRIPTION
LEH-38	GEMS 43760 LS-270 liquid sensor with 24" cable
LEH-39	SAME AS LEH-38
LEH-40	SAME AS LEH-38
LEL-38	Instrumentation Northwest PS9800 Pressure Transmitter and Relay Switch
LEL-39	SAME AS LEL-38
LEL-40	SAME AS LEL-38
LEH-IW	SAME AS LEL-38
LSHH-321	Flowline AS13-1120 Switch Pro capacitance level switch, SPDT contact, requires 120 VAC, .25 A
LSHH-322	SAME AS LSHH-321
PSH-323	DWYER Series 1800 Pressure Switch Model No 1823-40 range 5 to 44 in. of Water 1/8" NPT Connections, 1/2" NPT conduit connection
PSH-324	SAME AS PSH-323
PSL-323	SAME AS PSH-323
PSL-324	SAME AS PSH-323

NPTF I-5.DWG 11/22/99

PROJECT NO.S			
DESIGN PHASE			
FINAL DESIGN			
APPROVED	DATE		
G.D.M.	10/99		

APPROVALS		DATE
CONST REV		
P.M.	J.R.	8/99
DES MGR	G.D.M.	8/99
DESIGN	S.S.	3/99
CHECKED	G.D.M.	3/99
DRAWN	S.S.	3/99

SUBCONTRACT NO.

RELEASED

PARSONS

FOR U.S. DEPARTMENT OF ENERGY IDAHO OPERATIONS OFFICE IDAHO FALLS, IDAHO

TAN 1611 OU 1-07B NPTF
AC INPUTS SHEET 3
I/O DIAGRAM

SIZE D | SCALE NONE | REV 1 | A/E DWG. NO. I-5

ADOCS NO.

REVISIONS			
REV	DESCRIPTION	DATE	APPROVED
1	Removed TAN-33 from Extraction System	11/22/99	[signature]

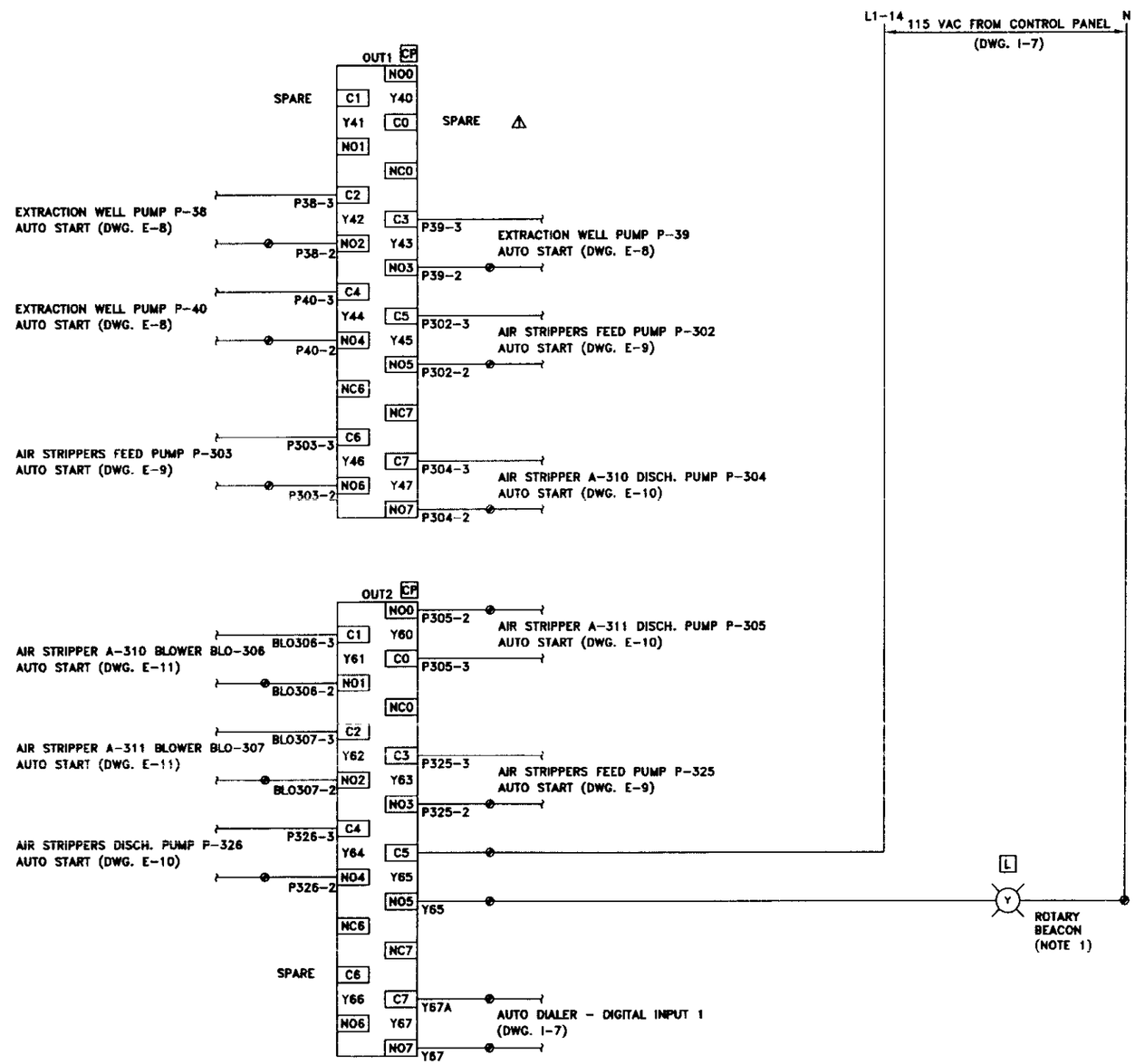

LEGEND:

(V) VENDOR SUPPLIED

● TERMINAL IN MAIN CONTROL PANEL

[L] LOCAL (AT EQUIPMENT)

[CP] CONTROL PANEL

[MC] MOTOR STARTER

NOTES:

1. MOUNT ROTARY BEACON ON TOP OF BUILDING.

TAG NO.	DESCRIPTION
ROTARY BEACON	EDWARDS 57EDFA-N5 heavy duty double flash stobe light, 2.3 peak candela

NPTF I-6.DWG 11/22/99

PROJECT NO.S	APPROVALS		DATE
	CONST REV		
	P.M.	J.R.	8/99
	DES MGR	G.D.M.	8/99
DESIGN PHASE	DESIGN	S.S.	3/99
FINAL DESIGN	CHECKED	G.D.M.	3/99
	DRAWN	S.S.	3/99
APPROVED	DATE	SUBCONTRACT NO.	
G.D.M.	10/99	RELEASED	

PARSONS

FOR U.S. DEPARTMENT OF ENERGY IDAHO OPERATIONS OFFICE IDAHO FALLS, IDAHO

TAN 1611 OU 1-07B NPTF RELAY OUTPUTS I/O DIAGRAM

SIZE D | INDEX CODE NUMBER AREA TYPE CL ORIG | DRAWING NO. | REV 1 | A/E DWG. NO. I-6

SCALE NONE | SPEC CODE

ADOCS NO. _____

REVISIONS			
REV	DESCRIPTION	DATE	APPROVED

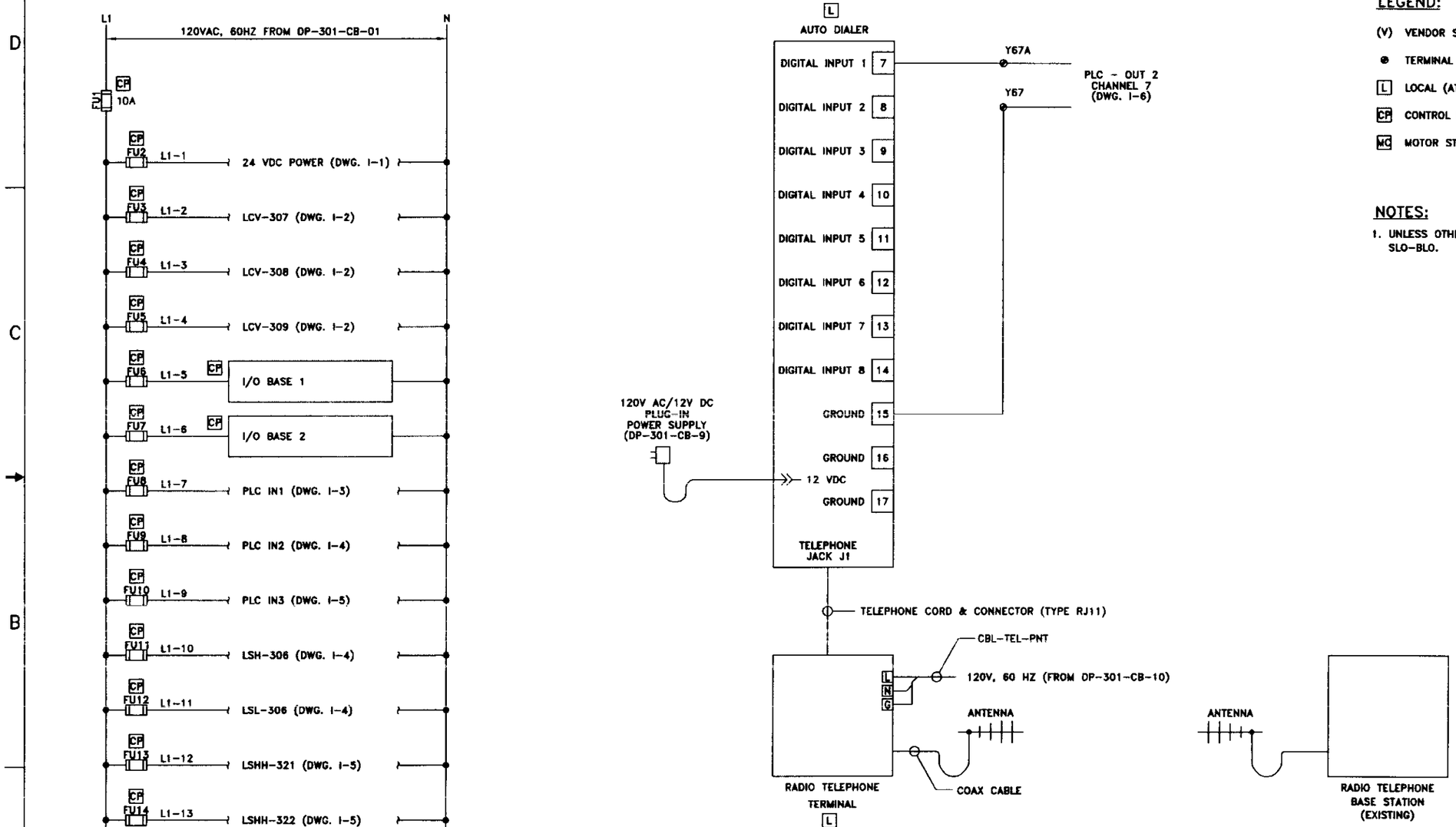

LEGEND:

(V) VENDOR SUPPLIED

● TERMINAL IN MAIN CONTROL PANEL

[L] LOCAL (AT EQUIPMENT)

[CP] CONTROL PANEL

[MC] MOTOR STARTER

NOTES:

1. UNLESS OTHERWISE NOTED, ALL FUSES ARE 3A SLO-BLO.

		APPROVALS		DATE
PROJECT NO.S		CONST REV		
		P.M.	J.K.	8/99
		DES MGR	C.D.M.	8/99
DESIGN PHASE		DESIGN	S.S.	3/99
FINAL DESIGN		CHECKED	C.D.M.	3/99
		DRAWN	S.S.	3/99
APPROVED	DATE	SUBCONTRACT NO.		
	10/5/99	RELEASED		

PARSONS

FOR U.S. DEPARTMENT OF ENERGY IDAHO OPERATIONS OFFICE IDAHO FALLS, IDAHO

TAN 1611 OU 1-07B NPTF

MAIN CONTROL PANEL

POWER DISTRIBUTION

SIZE D | SCALE NONE | REV 0 | A/E DWG. NO. I-7

NPTF I-7.DWG 11/22/99

ADOCS NO.

REVISIONS			
REV	DESCRIPTION	DATE	APPROVED
1	Removed TAN-33 from Extraction System	11/22/99	

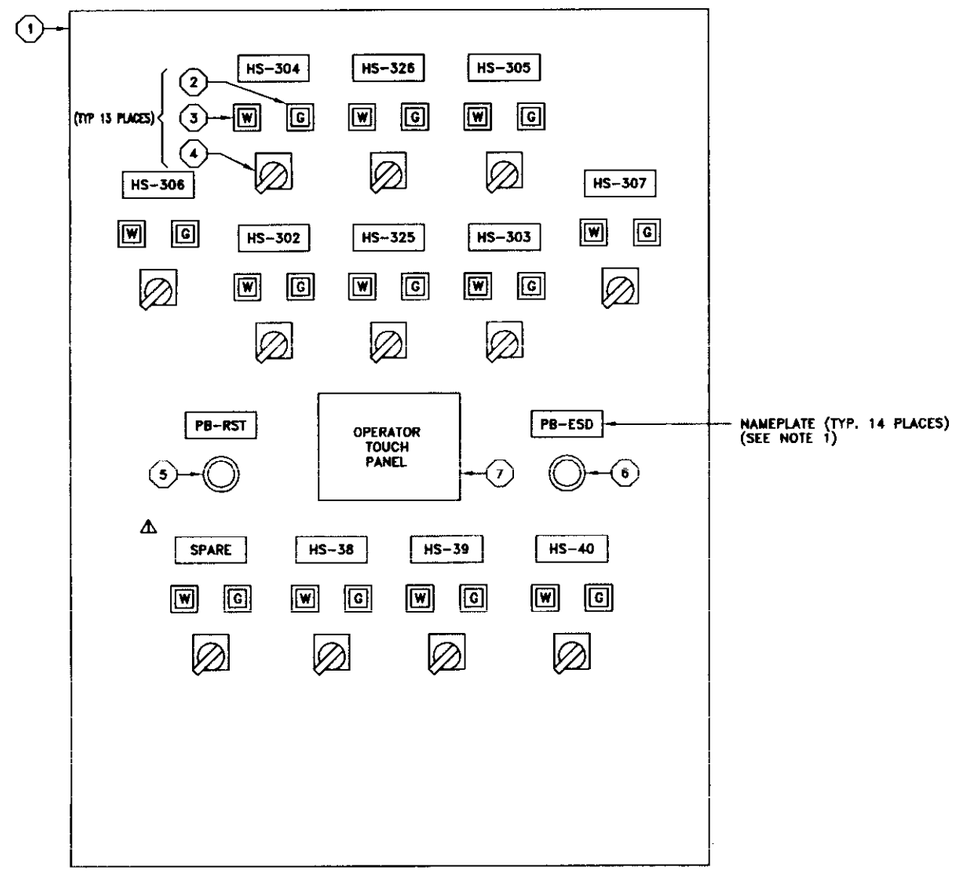

CONTROL PANEL – FRONT VIEW
(NTS)

NOTES:

1. NAMEPLATES SHALL BE 1-1/2" x 4" BAKELITE WITH BLACK LETTERING ON WHITE BACKGROUND. SEE NAMEPLATE SCHEDULE.

MATERIAL LIST		
NO.	DESCRIPTION	QTY
1	CONTROL PANEL, NEMA TYPE 12, 36"W x 42"H x 12"DP WITH 33"W x 39"H REAR PANEL, HOFFMAN A-423612LP WITH A-42P36.	1
2	30mm DISPLAY LIGHT, 1x1 UNIT, GREEN COLOR SCREEN, 120 VAC LED's, IDEC SLC30, STYLE F, WITH MARKING: "AUTO"	12
3	30mm DISPLAY LIGHT, 1x1 UNIT, WHITE COLOR SCREEN, 120 VAC LED's, IDEC SLC30, STYLE F, WITH MARKING: "RUN"	12
4	30mm 3-POSITION SELECTOR SWITCH, MAINTAINED POSITION, LEVER OPERATED, 4NO CONTACTS, IDEC ASD3L40N WITH "HAND-OFF-AUTO" LEGEND PLATE NALD-(317)	12
5	30mm BLACK PUSHBUTTON WITH FULL SHROUD, MOMENTARY ACTION, 1NO CONTACT, IDEC ABFD210N-B WITH "RESET" NAMEPLATE NALD-(119)	1
6	40mm RED PUSHLOCK TURN RESET MUSHROOM PUSHBUTTON, 1 NC CONTACT, IDEC AVD301N-R WITH "EMERG. STOP" NAMEPLATE NALD-(104)	1
7	OPERATOR COLOR TOUCH PANEL, 5.7" DIAGONAL DISPLAY, PLC DIRECT DP-C320 WITH SCREEN CREATOR SOFTWARE DP-PGMSW & CABLE DP-2CBL	1

TAG	NAMEPLATE SCHEDULE		
	LINE 1	LINE 2	LINE 3
SPARE	SPARE	NOT USED	
HS-38	Well Pump	TAN-38	
HS-39	Well Pump	TAN-39	
HS-40	Well Pump	TAN-40	
HS-302	A/S Influent	Pump #2	
HS-303	A/S Influent	Pump #1	
HS-304	A/S Effluent	Pump #2	
HS-305	A/S Effluent	Pump #1	
HS-306	Blower #2		
HS-307	Blower #1		
HS-325	A/S Influent	Pump #3	
HS-326	A/S Effluent	Pump #3	
PB-ESD	EMERGENCY	SHUTDOWN	
PB-RST	SYSTEM	RESET	

NPTF 1-8.DWG 11/22/99

		APPROVALS		DATE
PROJECT NO.S		CONST REV		
		P.M.	J.R.	5/99
		DES MGR	G.D.M.	5/99
DESIGN PHASE		DESIGN	S.B.	3/99
		CHECKED	G.D.M.	3/99
FINAL DESIGN		DRAWN	S.B.	3/99
APPROVED	DATE	SUBCONTRACT NO.		
G.D.M.	10/99	RELEASED		

PARSONS

FOR U.S. DEPARTMENT OF ENERGY IDAHO OPERATIONS OFFICE IDAHO FALLS, IDAHO

TAN 1611 OU 1-07B NPTF
MAIN CONTROL PANEL
FRONT PANEL DETAILS

SIZE D | SCALE NONE | REV 1 | A/E DWG. NO. 1-8

ADOCS NO.

REVISIONS			
REV	DESCRIPTION	DATE	APPROVED
1	Removed TAN-33 from Extraction System	11/22/99	[signature]

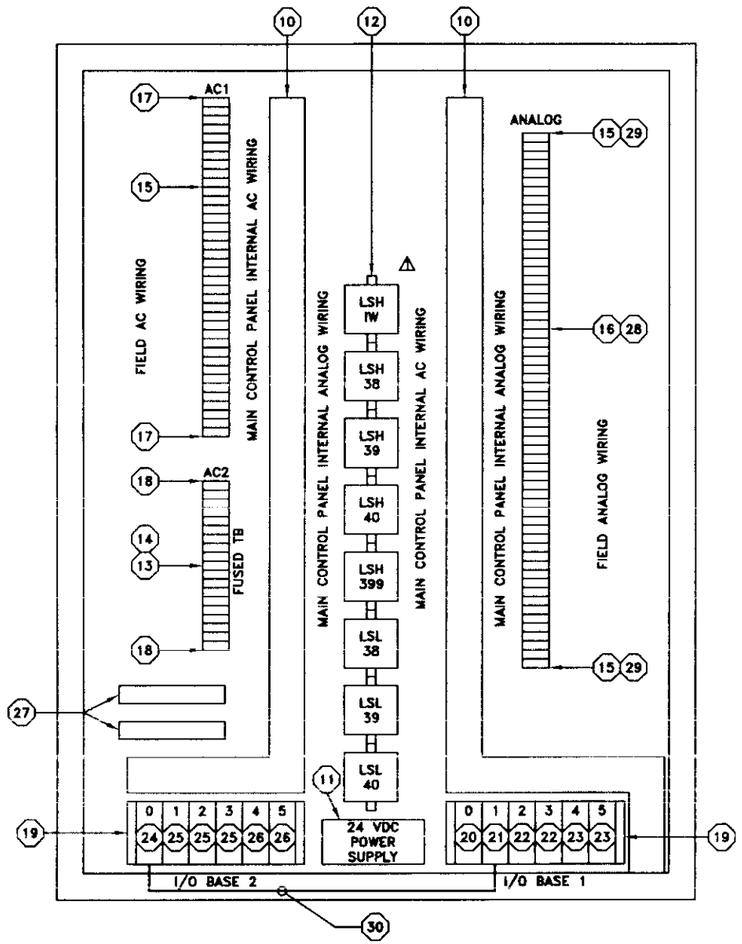

CONTROL PANEL – SUB PANEL VIEW
(NTS)

MATERIAL LIST		
NO.	DESCRIPTION	QTY
10	SLOTTED WIRE WIRE DUCT, 2"W x 3" H	10 FT
11	24 VDC POWER SUPPLY, 2.4A, 100/120/220/230/240 VAC, 47-63 HZ INPUT, SOLA/HEVI-DUTY SLS-24-024	1
12	GEMS 14460 LOAD-PAK RELAY, NO 5A CONTACT RATED 24-260 VAC, 6-14 VDC SENSOR INPUT	8
13	600V, 10A RATED FUSE TERMINAL BLOCK WITH 100-300 VAC NEON BLOWN-FUSE INDICATOR, IDEC BNF10NW WITH 1/4" x 1-1/4" 600V RATED FUSES, (16) 3A & (1) 10A	17
14	600V, 30A RATED TOUCH-DOWN TERMINALS, IDEC BNH30W	2
15	600V, 15A RATED DUAL-DECK TOUCH-DOWN TERMINALS, IDEC BNDH15W	40
16	600V, 15A RATED TOUCH-DOWN TERMINALS, IDEC BNH15LW	71
17	19.69" CONNECTING ROD, NUTS, AND MOUNTING CLIP, IDEC BNR2, BNN1, AND BNDL2.	10
18	10.34" CONNECTING ROD, NUTS, AND MOUNTING CLIP, IDEC BNR1, BNN1, AND BNDL2.	5
19	6 SLOT I/O BASE, PLC DIRECT D2-06B	2
20	CPU & DIRECTSOFT SOFTWARE, PLC DIRECT D2-250 & PC-PGM-205	1
21	REMOTE I/O MASTER MODULE, PLC DIRECT D2-RMSM	1
22	8 CHANNEL ANALOG INPUT MODULE, 4-20mA, PLC DIRECT F2-08AD-1	2
23	2 CHANNEL ANALOG OUTPUT MODULE, 4-20mA, PLC DIRECT F2-02DA-1	2
24	REMOTE I/O SLAVE MODULE & DL205 REMOTE I/O MANUAL, PLC DIRECT D2-RSSS & D2-REMIO-M	1
25	16 POINT 110 VAC INPUT MODULE, PLC DIRECT D2-16NA	3
26	8 POINT 12-240 VAC OUTPUT MODULE, PLC DIRECT F2-08TRS	2
27	COPPER BUS BAR, 1" X 6"	2
28	39.37" LONG DIN RAIL, IDEC BNDN-1000	1
29	DIN RAIL MOUNT END CLIPS AND END PLATES, IDEC BNL5 & BNE15W.	2
30	12 FT. RS232 SHIELDED PIGTAIL CABLE, PLC DIRECT D2-DSCBL-2	1

NPTF I-9.DWG 11/22/99

PROJECT NO.S	APPROVALS		DATE
	CONST REV		
	P.M.	J.R.	8/99
	DES MGR	G.D.M.	8/99
DESIGN PHASE	DESIGN	S.S.	3/99
FINAL DESIGN	CHECKED	G.D.M.	3/99
	DRAWN	S.S.	3/99
APPROVED	DATE	SUBCONTRACT NO.	
G.D.M.	10/99	RELEASED	

PARSONS — U.S. DEPARTMENT OF ENERGY, IDAHO OPERATIONS OFFICE, IDAHO FALLS, IDAHO

TAN 1611 OU 1-07B NPTF
MAIN CONTROL PANEL
REAR PANEL DETAILS

SIZE D — INDEX CODE NUMBER: AREA, TYPE, CL, ORIG — DRAWING NO. — REV 1 — A/E DWG. NO. I-9

SCALE NONE

ADOCS NO. ____

REVISIONS			
REV	DESCRIPTION	DATE	APPROVED
1	Removed TAN-33 from Extraction System	11/22/99	[signature]

NOTES:

1. MAIN CONTROL PANEL WIRING TO BE AS FOLLOWS:
   120 VOLT AC WIRING – #16 MTW, 300 VOLT INSULATION
   AC (HOT) – RED
   NEUTRAL – WHITE
   GROUND – GREEN
   INSTRUMENTATION (ANALOG) – 2/C #16 TWSH (BELDON #8719)
   LOW VOLTAGE DC – #16 MTW, 300 VOLT INSULATION – BLUE
2. TB-ANALOG, TB-AC1, TB-AC2, NEUT BUS & GND BUS INTERNAL CONTROL PANEL WIRING IS SHOWN ON DWG. E-20.
3. IN1, IN3 AND REMOTE I/O SLAVE MODULE BUS INTERNAL CONTROL PANEL WIRING IS SHOWN ON DWG. I-11.

LEGEND:

FOLD AND TAPE BACK SHIELD

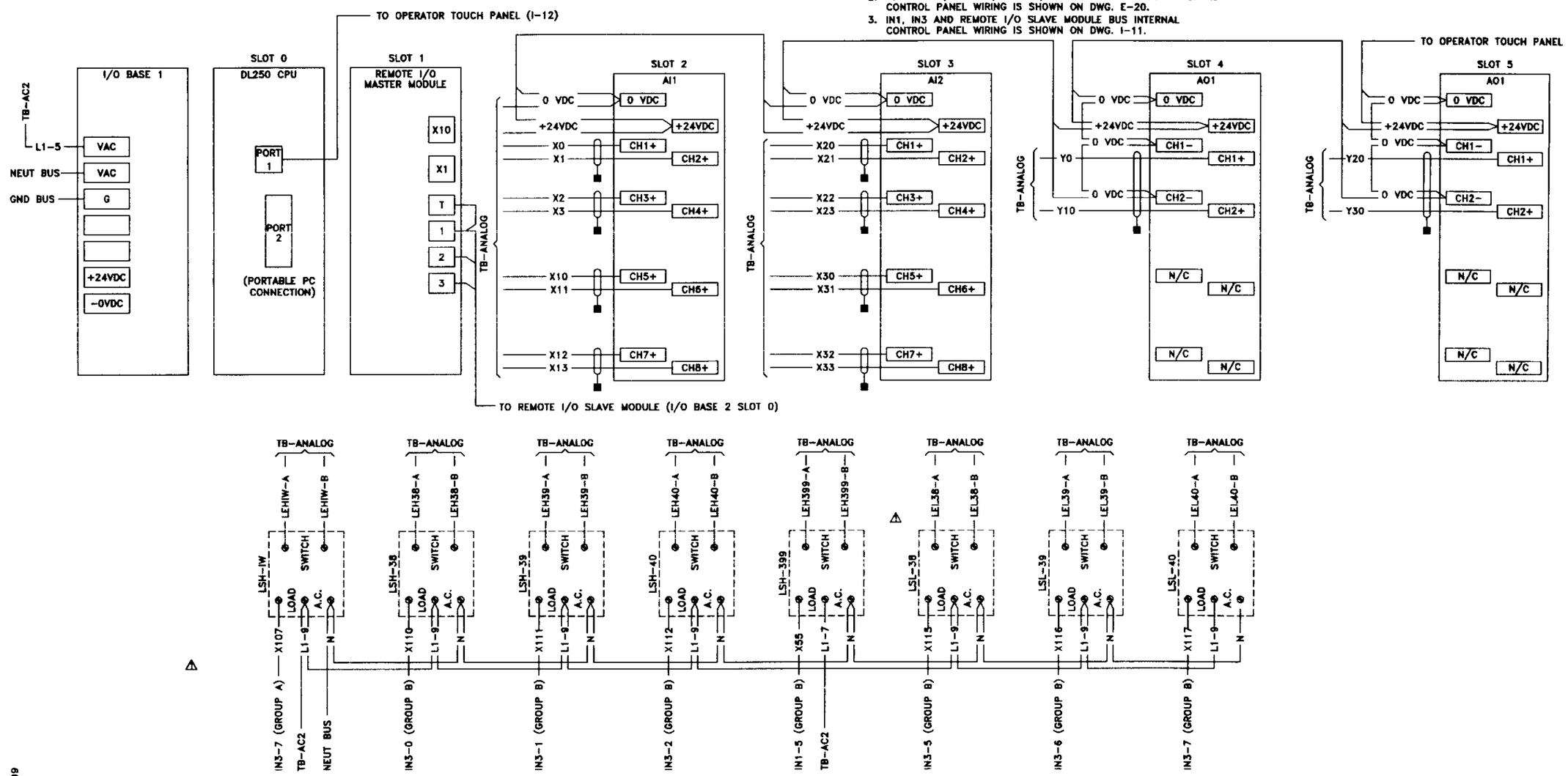

PROJECT NO.S	APPROVALS		DATE
	CONST REV		
	P.M.	J.B.	8/99
	DES MGR	G.D.M.	8/99
DESIGN PHASE	DESIGN	S.S.	3/99
FINAL DESIGN	CHECKED	G.D.M.	3/99
	DRAWN	S.S.	3/99
APPROVED	DATE	SUBCONTRACT NO.	
G.D.M.	10/99	RELEASED	

PARSONS

FOR U.S. DEPARTMENT OF ENERGY IDAHO OPERATIONS OFFICE IDAHO FALLS, IDAHO

TAN 1611 OU 1-07B NPTF
MAIN CONTROL PANEL
I/O BASE 1 AND GEMS WIRING

SIZE D | INDEX CODE NUMBER: AREA, TYPE, CL, ORIG | DRAWING NO. | REV 1 | A/E DWG. NO. I-10

SCALE NONE

ADOCS NO. ____

NPTF I-10.DWG 11/22/99

REVISIONS			
REV	DESCRIPTION	DATE	APPROVED
1	Removed TAN-33 from Extraction System	11/22/99	

NOTES:

1. MAIN CONTROL PANEL WIRING TO BE AS FOLLOWS:
   120 VOLT AC WIRING – #16 MTW, 300 VOLT INSULATION
   AC (HOT) – RED
   NEUTRAL – WHITE
   GROUND – GREEN
   INSTRUMENTATION (ANALOG) – 2/C #16 TWSH (BELDON #8719)
   LOW VOLTAGE DC – #16 MTW, 300 VOLT INSULATION – BLUE
2. TB-ANALOG, TB-AC1 & TB-AC2 INTERNAL CONTROL PANEL WIRING IS SHOWN ON DWG. E-20.
3. HS & PB INTERNAL CONTROL PANEL WIRING IS SHOWN ON DWG. I-12.
4. LSH & LSL INTERNAL CONTROL PANEL WIRING IS SHOWN ON DWG. I-10.

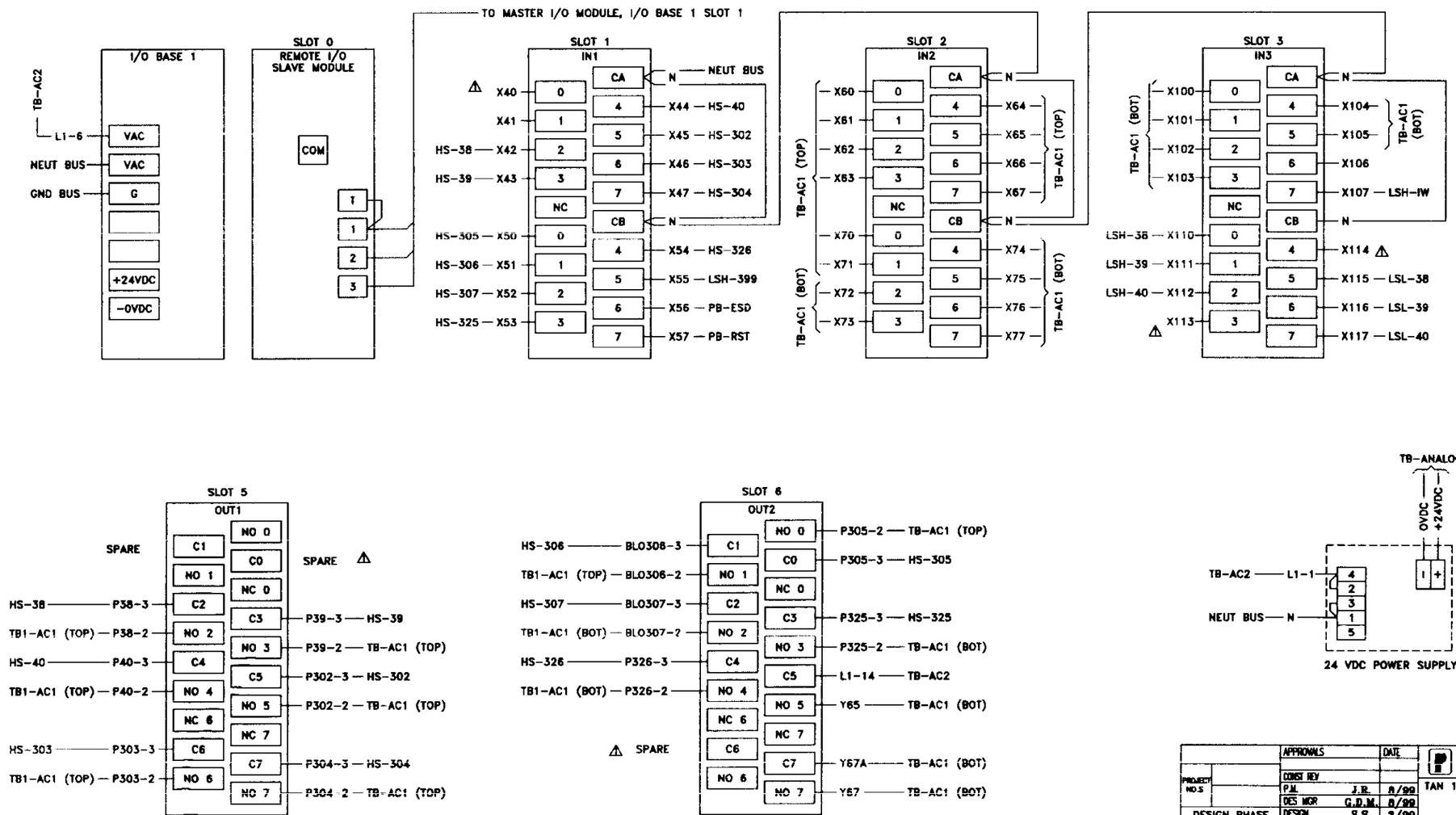

APPROVALS		DATE
CONST REV		
P.M.	J.R.	8/99
DES MGR	G.D.M.	8/99
DESIGN	S.S.	3/99
CHECKED	G.D.M.	3/99
DRAWN	S.S.	3/99
SUBCONTRACT NO.		
RELEASED		

PROJECT NO.S

DESIGN PHASE

FINAL DESIGN

APPROVED	DATE
G.D.M.	10/99

PARSONS

FOR U.S. DEPARTMENT OF ENERGY IDAHO OPERATIONS OFFICE IDAHO FALLS, IDAHO

TAN 1611 OU 1-07B NPTF

MAIN CONTROL PANEL

I/O BASE 2 & PWR SUP WIRING

SIZE D | SCALE NONE | REV 1 | A/E DWG. NO. I-11

ADOCS NO.

NPTF I-11.DWG 11/22/99

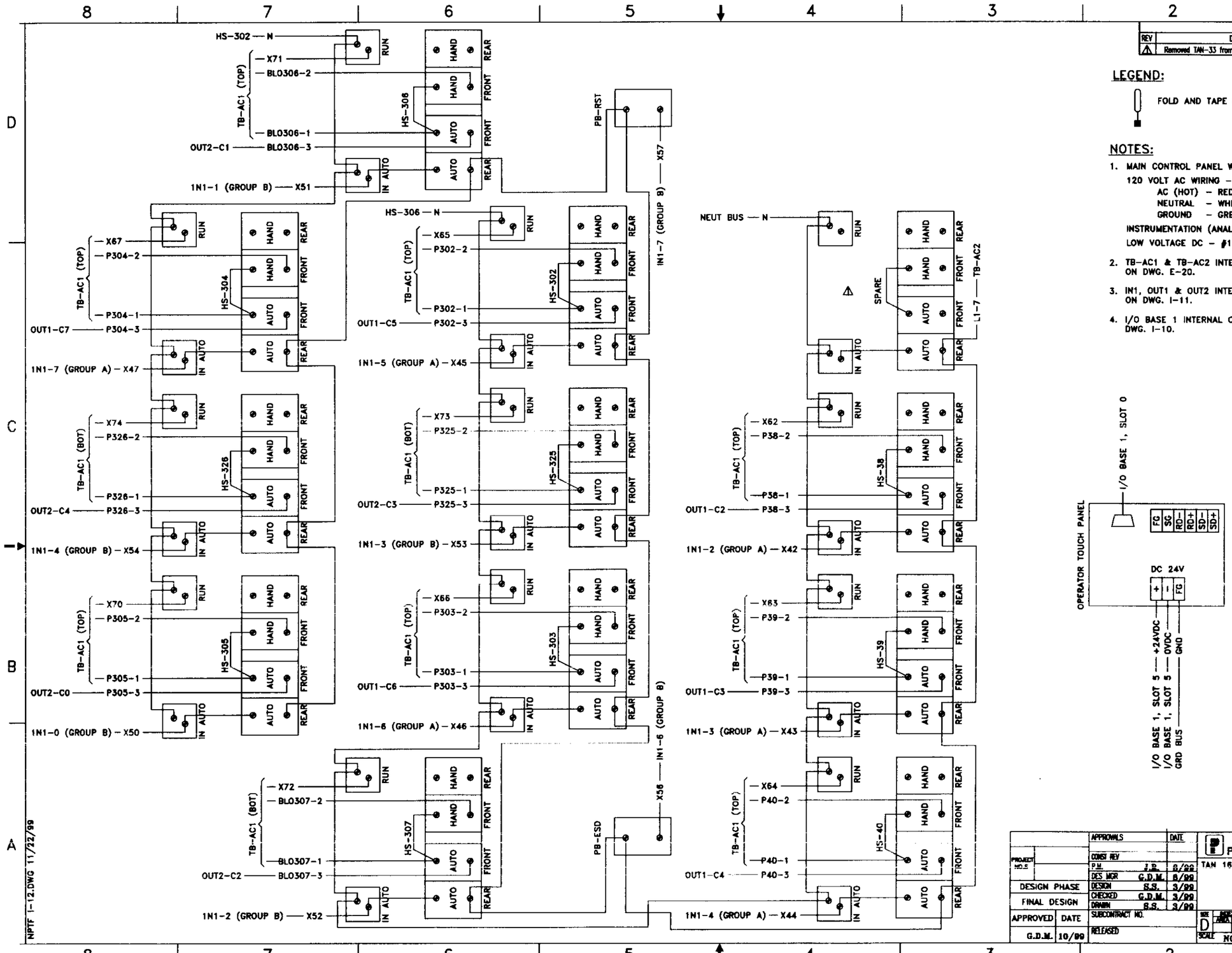

REVISIONS			
REV	DESCRIPTION	DATE	APPROVED
1	Removed TAN-33 from Extraction System	11/22/99	[signature]

LEGEND:

FOLD AND TAPE BACK SHIELD

NOTES:

1. MAIN CONTROL PANEL WIRING TO BE AS FOLLOWS:
   120 VOLT AC WIRING – #16 MTW, 300 VOLT INSULATION
   AC (HOT) – RED
   NEUTRAL – WHITE
   GROUND – GREEN
   INSTRUMENTATION (ANALOG) – 2/C #16 TWSH (BELDON #8719)
   LOW VOLTAGE DC – #16 MTW, 300 VOLT INSULATION – BLUE
2. TB-AC1 & TB-AC2 INTERNAL CONTROL PANEL WIRING IS SHOWN ON DWG. E-20.
3. IN1, OUT1 & OUT2 INTERNAL CONTROL PANEL WIRING IS SHOWN ON DWG. I-11.
4. I/O BASE 1 INTERNAL CONTROL PANEL WIRING IS SHOWN ON DWG. I-10.

PROJECT NO.S	APPROVALS		DATE
	CONST REV		
	P.M.	J.B.	8/99
	DES MGR	G.D.M.	8/99
DESIGN PHASE	DESIGN	S.S.	3/99
FINAL DESIGN	CHECKED	G.D.M.	3/99
	DRAWN	S.S.	3/99
APPROVED	DATE	SUBCONTRACT NO.	
G.D.M.	10/99	RELEASED	

PARSONS — U.S. DEPARTMENT OF ENERGY, IDAHO OPERATIONS OFFICE, IDAHO FALLS, IDAHO

TAN 1611

OU 1-07B NPTF MAIN CONTROL PANEL FRONT PANEL WIRING

SIZE D — INDEX CODE NUMBER: AREA, TYPE, CL, ORIG — DRAWING NO. — REV 1 — A/E DWG. NO. I-12

SCALE NONE — SPEC CODE

ADOCS NO. ____

REVISIONS			
REV	DESCRIPTION	DATE	APPROVED
1	Removed TAN-33 from Extraction System	11/22/99	

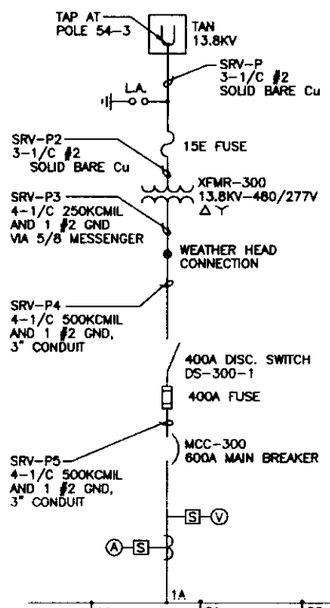

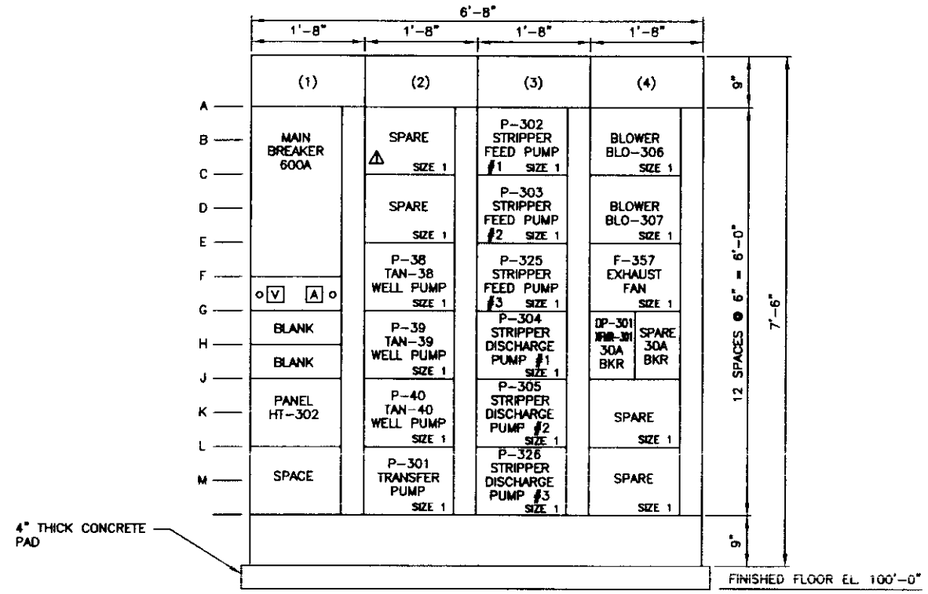

MCC-300 ELEVATION

SCALE: 3/4"=1'-0"

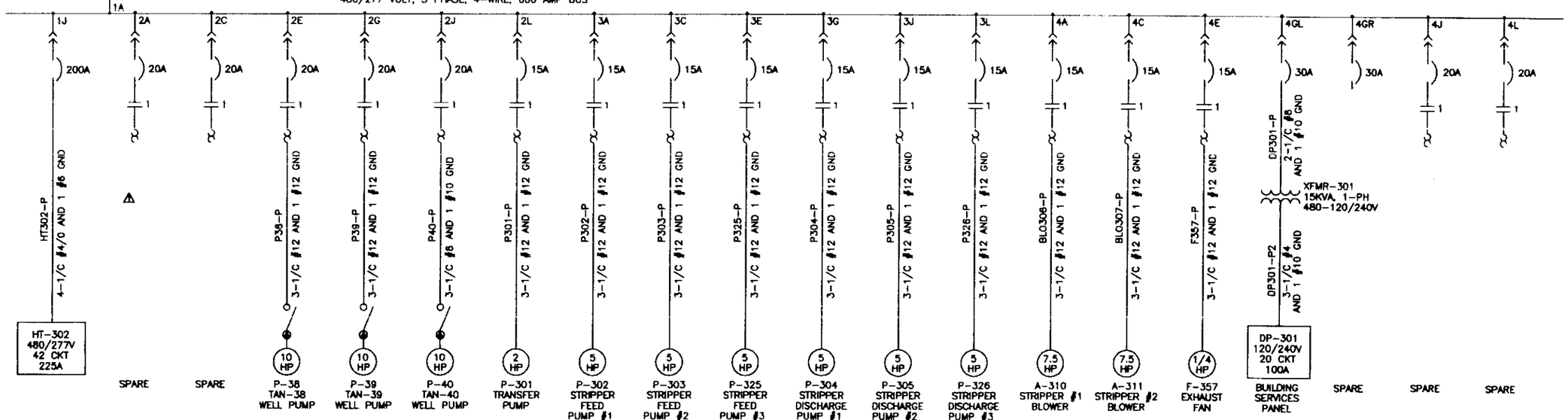

APPROVALS		DATE
CONST REV		
P.M.	J.R.	8-99
DES MGR	G.D.M.	8-99
DESIGN	B. PROSKI	2-99
CHECKED	C.D.M.	2-99
DRAWN	D.B.	2-99
SUBCONTRACT NO.		
RELEASED		

PROJECT NO.S

DESIGN PHASE

FINAL DESIGN

APPROVED	DATE
G.D.M.	10/99

PARSONS

U.S. DEPARTMENT OF ENERGY IDAHO OPERATIONS OFFICE IDAHO FALLS, IDAHO

TAN-1611

OU 1-07B NPTF ELECTRICAL ONE LINE DIAGRAM AND MCC-300 ELEVATION

SIZE D | SCALE NOTED | REV 1 | A/E DWG. NO. E-1

NPTF E-1.DWG 11/22/99

ADOCS NO.

REVISIONS			
REV	DESCRIPTION	DATE	APPROVED
1	Removed TAN-33 from Extraction System	11/22/99	

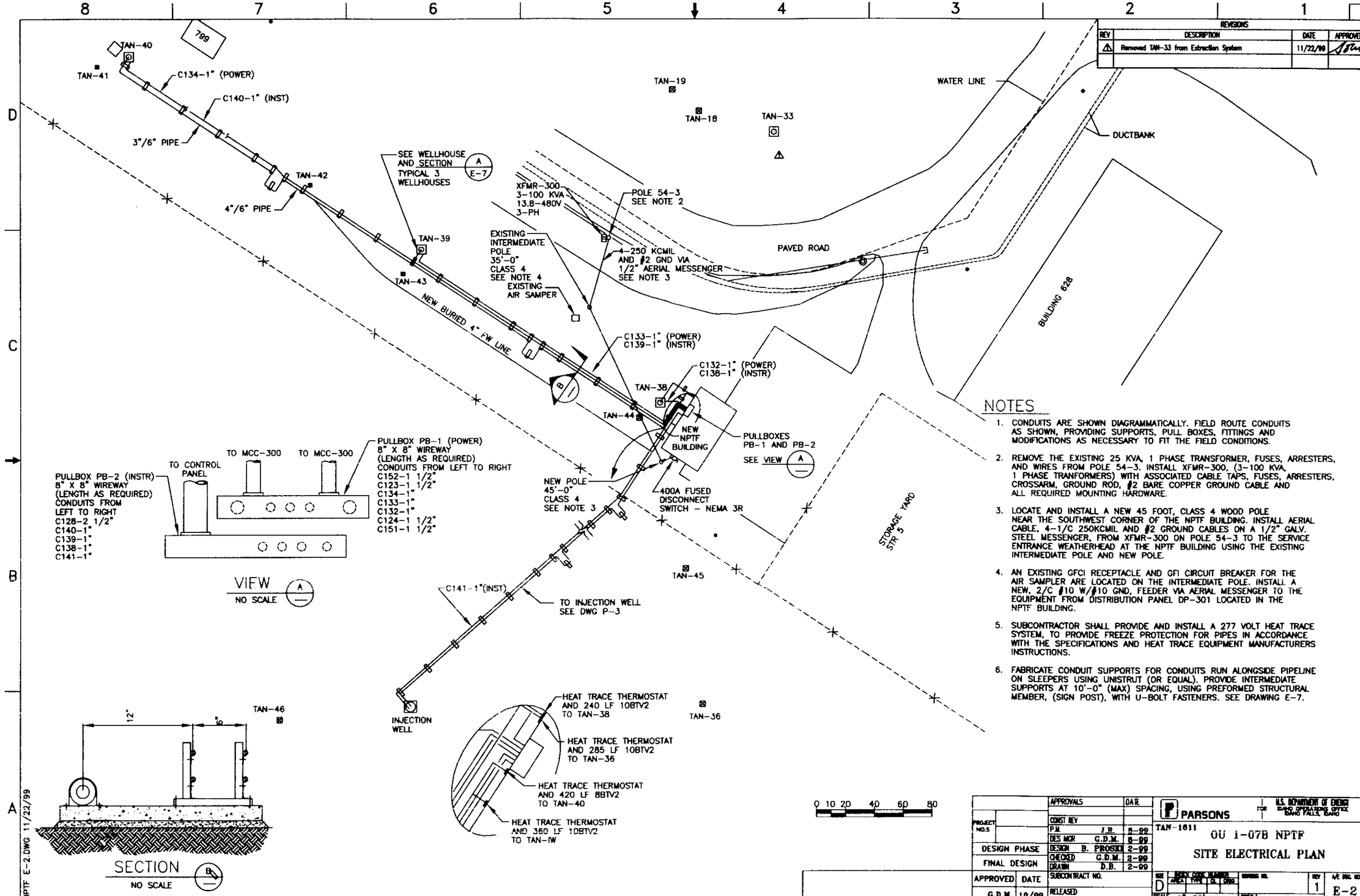

NOTES

1. CONDUITS ARE SHOWN DIAGRAMMATICALLY. FIELD ROUTE CONDUITS AS SHOWN, PROVIDING SUPPORTS, PULL BOXES, FITTINGS AND MODIFICATIONS AS NECESSARY TO FIT THE FIELD CONDITIONS.
2. REMOVE THE EXISTING 25 KVA, 1 PHASE TRANSFORMER, FUSES, ARRESTERS, AND WIRES FROM POLE 54-3. INSTALL XFMR-300, (3-100 KVA, 1 PHASE TRANFORMERS) WITH ASSOCIATED CABLE TAPS, FUSES, ARRESTERS, CROSSARM, GROUND ROD, #2 BARE COPPER GROUND CABLE AND ALL REQUIRED MOUNTING HARDWARE.
3. LOCATE AND INSTALL A NEW 45 FOOT, CLASS 4 WOOD POLE NEAR THE SOUTHWEST CORNER OF THE NPTF BUILDING. INSTALL AERIAL CABLE, 4-1/C 250KCMIL AND #2 GROUND CABLES ON A 1/2" GALV. STEEL MESSENGER, FROM XFMR-300 ON POLE 54-3 TO THE SERVICE ENTRANCE WEATHERHEAD AT THE NPTF BUILDING USING THE EXISTING INTERMEDIATE POLE AND NEW POLE.
4. AN EXISTING GFCI RECEPTACLE AND GFI CIRCUIT BREAKER FOR THE AIR SAMPLER ARE LOCATED ON THE INTERMEDIATE POLE. INSTALL A NEW, 2/C #10 W/#10 GND, FEEDER VIA AERIAL MESSENGER TO THE EQUIPMENT FROM DISTRIBUTION PANEL DP-301 LOCATED IN THE NPTF BUILDING.
5. SUBCONTRACTOR SHALL PROVIDE AND INSTALL A 277 VOLT HEAT TRACE SYSTEM, TO PROVIDE FREEZE PROTECTION FOR PIPES IN ACCORDANCE WITH THE SPECIFICATIONS AND HEAT TRACE EQUIPMENT MANUFACTURERS INSTRUCTIONS.
6. FABRICATE CONDUIT SUPPORTS FOR CONDUITS RUN ALONGSIDE PIPELINE ON SLEEPERS USING UNISTRUT (OR EQUAL). PROVIDE INTERMEDIATE SUPPORTS AT 10'-0" (MAX) SPACING, USING PREFORMED STRUCTURAL MEMBER, (SIGN POST), WITH U-BOLT FASTENERS. SEE DRAWING E-7.

APPROVALS		DATE
CONST REV		
P.M.	J.R.	8-99
DES MGR	G.D.M.	8-99
DESIGN	B. PIROSKI	2-99
CHECKED	G.D.M.	2-99
DRAWN	D.B.	2-99

PROJECT NO.S

DESIGN PHASE

FINAL DESIGN

APPROVED	DATE
G.D.M.	10/99

SUBCONTRACT NO.

RELEASED

PARSONS

FOR U.S. DEPARTMENT OF ENERGY IDAHO OPERATIONS OFFICE IDAHO FALLS, IDAHO

TAN-1611

OU 1-07B NPTF

SITE ELECTRICAL PLAN

SIZE D | INDEX CODE NUMBER: AREA TYPE CL ORIG | DRAWING NO. | REV 1 | A/E DWG. NO. E-2

SCALE 1"=30'

NPTF E-2.DWG 11/22/99

ADOCS NO.

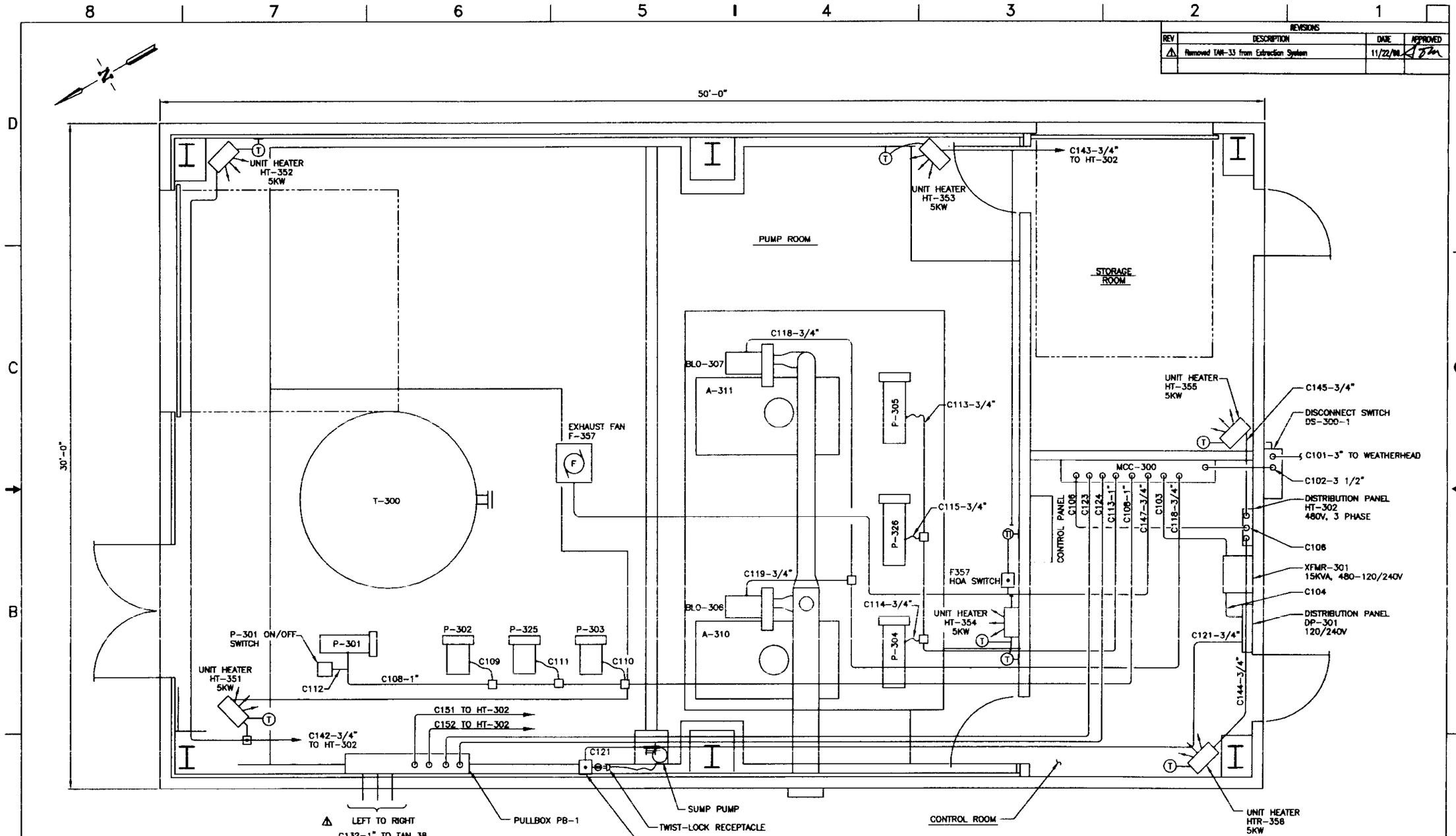

NOTES

1. CONDUITS ARE DIAGRAMMATIC. FIELD ROUTE AND SUPPORT CONDUITS AS REQUIRED.
2. VERIFY FINAL DEVICE LOCATIONS.

POWER PLAN

REV	DESCRIPTION	DATE	APPROVED
1	Removed TAN-33 from Extraction System	11/22/99	

PROJECT NO.S	APPROVALS		DATE
	CONST REV		
	P.M.	J.B.	8-99
	DES MGR	G.D.M.	8-99
DESIGN PHASE	DESIGN	B. PROSKI	2-99
FINAL DESIGN	CHECKED	G.D.M.	2-99
	DRAWN	D.B.	2-99
APPROVED	DATE	SUBCONTRACT NO.	
G.D.M.	10/99	RELEASED	

PARSONS

FOR U.S. DEPARTMENT OF ENERGY IDAHO OPERATIONS OFFICE IDAHO FALLS, IDAHO

TAN-1611

OU 1-07B NPTF

BUILDING POWER PLAN

SIZE D | INDEX CODE NUMBER: AREA, TYPE, CL, GRID | DRAWING NO. | REV 1 | A/E DWG. NO. E-3

SCALE 1/2"=1'-0"

ADOCS NO.

NPTF E-3.DWG 11/22/99

REVISIONS			
REV	DESCRIPTION	DATE	APPROVED

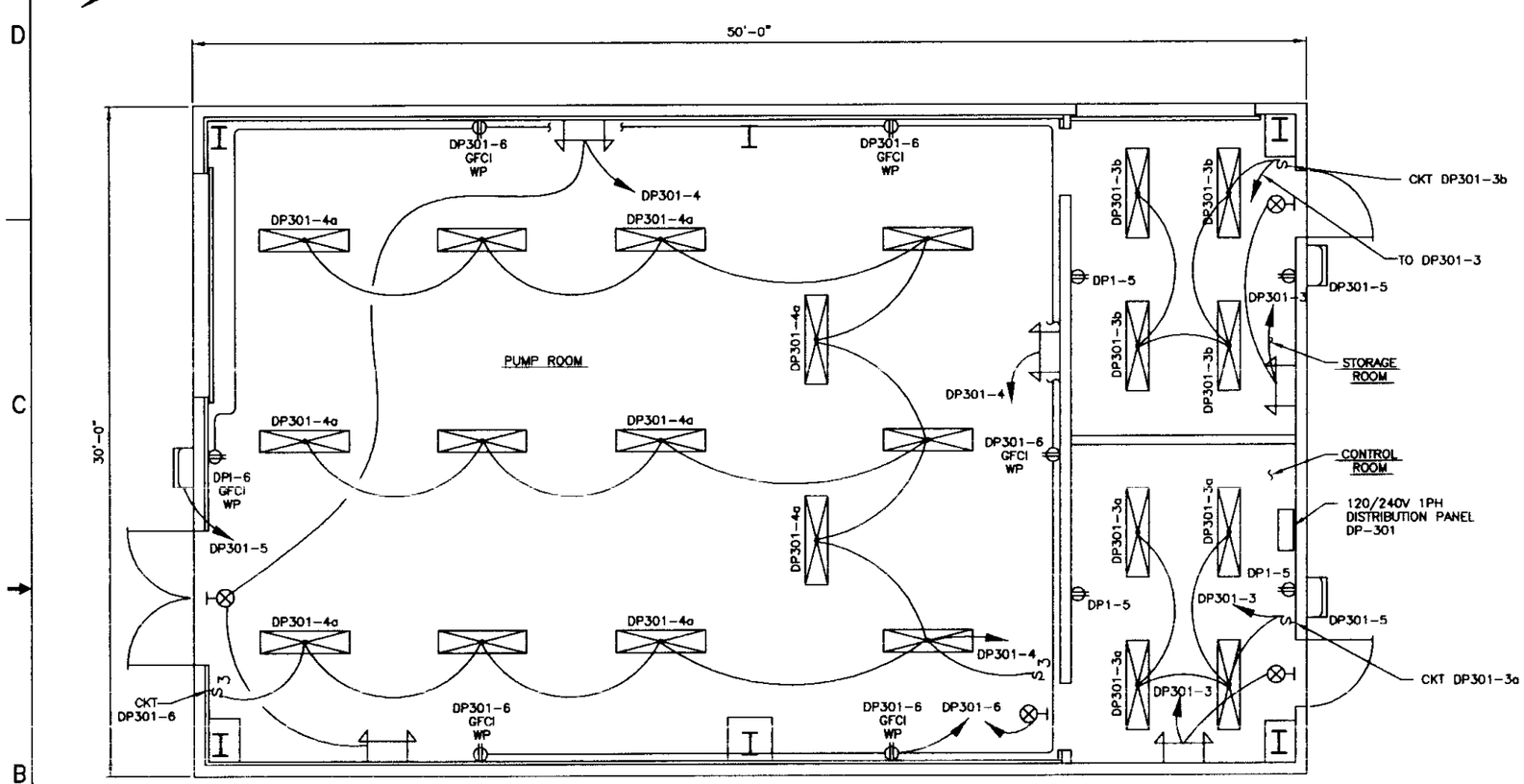

LIGHTING PLAN

LEGEND

- FLUORESCENT LIGHT FIXTURE 4'-0" LONG, TWO-32W HIGH EFFICIENCY LAMPS (T8) WATER TIGHT ENCLOSURE
- WALL-PAK LIGHT FIXTURE 70 WATT HPS LAMP, 120VAC W/ PHOTO ELECTRIC SENSOR
- EMERGENCY LIGHT FIXTURE TWO HEAD
- EXIT LIGHT, LED TYPE (RED) W/ BATTERY BACKUP
- DISTRIBUTION PANEL — DPX-X — CKT NO. — GFCI WP — DUPLEX GFCI RECEPTACLE, 20 AMP IN FD CAST BOX W/ WEATHER PROOF COVER
- S — TOGGLE SWITCH
- S3 — TOGGLE SWITCH - 3 WAY

NOTES

1. EMERGENCY LIGHTS AND EXIT LIGHTS SHALL BE WIRED TO LIGHT CIRCUIT AS INDICATED (HOT) AHEAD OF SWITCHES.
2. LIGHTING CIRCUITS INSTALLED INDOORS, 4'-0" ABOVE FINISHED FLOOR MAY BE INSTALLED IN EMT CONDUIT USING STEEL COMPRESSION FITTINGS.

PROJECT NO.S			
DESIGN PHASE			
FINAL DESIGN			
APPROVED	DATE		
	10/15/99		

APPROVALS		DATE
CONST REV		
P.M.	J.R.	8-99
DES MGR	G.D.M.	8-99
DESIGN	B. PROSKI	2-99
CHECKED	G.D.M.	2-99
DRAWN	D.B.	2-99
SUBCONTRACT NO.		
RELEASED		

PARSONS

FOR U.S. DEPARTMENT OF ENERGY IDAHO OPERATIONS OFFICE IDAHO FALLS, IDAHO

TAN-1611

OU 1-07B NPTF
NPTF BUILDING
LIGHTING PLAN AND LEGEND

SIZE D | SCALE 3/8"=1'-0" | REV 0 | A/E DWG. NO. E-4

ADOCS NO.

NPTF E-4.DWG 8/4/99 3:50 PM

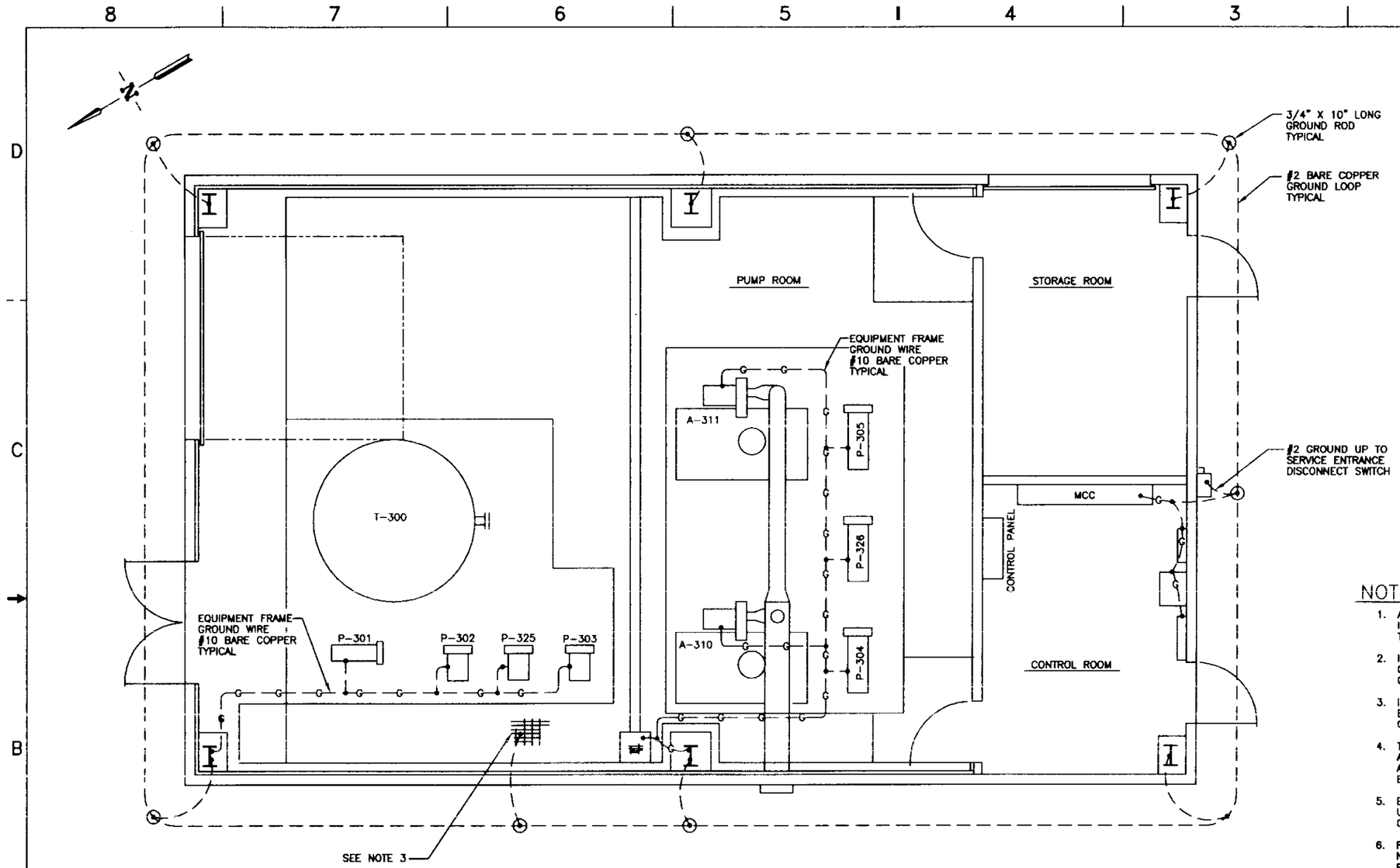

GROUNDING PLAN

LEGEND

- EMBEDDED GROUND WIRE
- EXPOSED GROUND WIRE
- GROUND ROD

NOTES

1. ALL ELECTRICAL EQUIPMENT IS TO BE GROUNDED IN ACCORDANCE WITH THE LATEST EDITION OF THE NATIONAL ELECTRIC CODE.
2. INSTALL GROUND ROD AS SHOWN, 3/4" X 10'-0" LONG. CONNECT BUILDING GROUND LOOP OF #2 BARE COPPER GROUND WIRE TO RODS USING EXOTHERMIC CONNECTIONS.
3. INSTALL #2 BARE COPPER GROUND LOOP 2'-6" MIN BELOW GRADE. CONNECT FOUNDATION REBAR TO GROUND LOOP AT 20'-0" INTERVALS.
4. TEST GROUNDING SYSTEM RESISTANCE AND MODIFY AS NECESSARY BY ADDING ADDITIONAL GROUND RODS AND/OR TREATING SOIL TO OBTAIN RESISTANCE BELOW 5 OHMS (MAXIMUM).
5. BUILDING COLUMNS TO BE CONNECTED TO GROUND LOOP USING #2 BARE COPPER GROUND WIRE. SEAL ALL CABLE PENETRATIONS AFTER INSTALLATION.
6. ROUTE AND ATTACH EQUIPMENT FRAME GROUND SO AS NOT TO CREATE A TRIPPING HAZARD. FASTEN TO EQUIPMENT FRAMES USING COMPRESSION LUGS AND BOLTS.
7. A GROUND ROD IS TO BE INSTALLED OUTSIDE OF THE CONCRETE PAD AT EACH WELL HOUSE (NOT SHOWN). ELECTRICAL DISTRIBUTION EQUIPMENT TO BE GROUNDED TO ROD. CONCRETE PAD AND REBAR SHALL ALSO BE CONNECTED TO GROUND ROD. SEE TYPICAL ELECTRICAL BOARD AT WELLHOUSE ELEVATION ON SHEET E-7.

REVISIONS			
REV	DESCRIPTION	DATE	APPROVED

APPROVALS		DATE
CONST REV		
P.M.	J.R.	8-99
DES MGR	G.D.M.	8-99
DESIGN	B. PROSKI	2-99
CHECKED	G.D.M.	2-99
DRAWN	D.B.	2-99
SUBCONTRACT NO.		
RELEASED		

PROJECT NO.S

DESIGN PHASE

FINAL DESIGN

APPROVED | DATE

PARSONS

U.S. DEPARTMENT OF ENERGY IDAHO OPERATIONS OFFICE IDAHO FALLS, IDAHO

TAN-1611

OU 1-07B NPTF

BUILDING GROUNDING PLAN

SIZE D | INDEX CODE NUMBER: AREA, TYPE, CL, ORIG. | DRAWING NO. | REV 0 | A/E DWG. NO. E-5

SCALE 3/8"=1'-0"

SPEC CODE

ADOCS NO.

NPTF E-5.DWG 8/99 3:30 PM

REVISIONS			
REV	DESCRIPTION	DATE	APPROVED

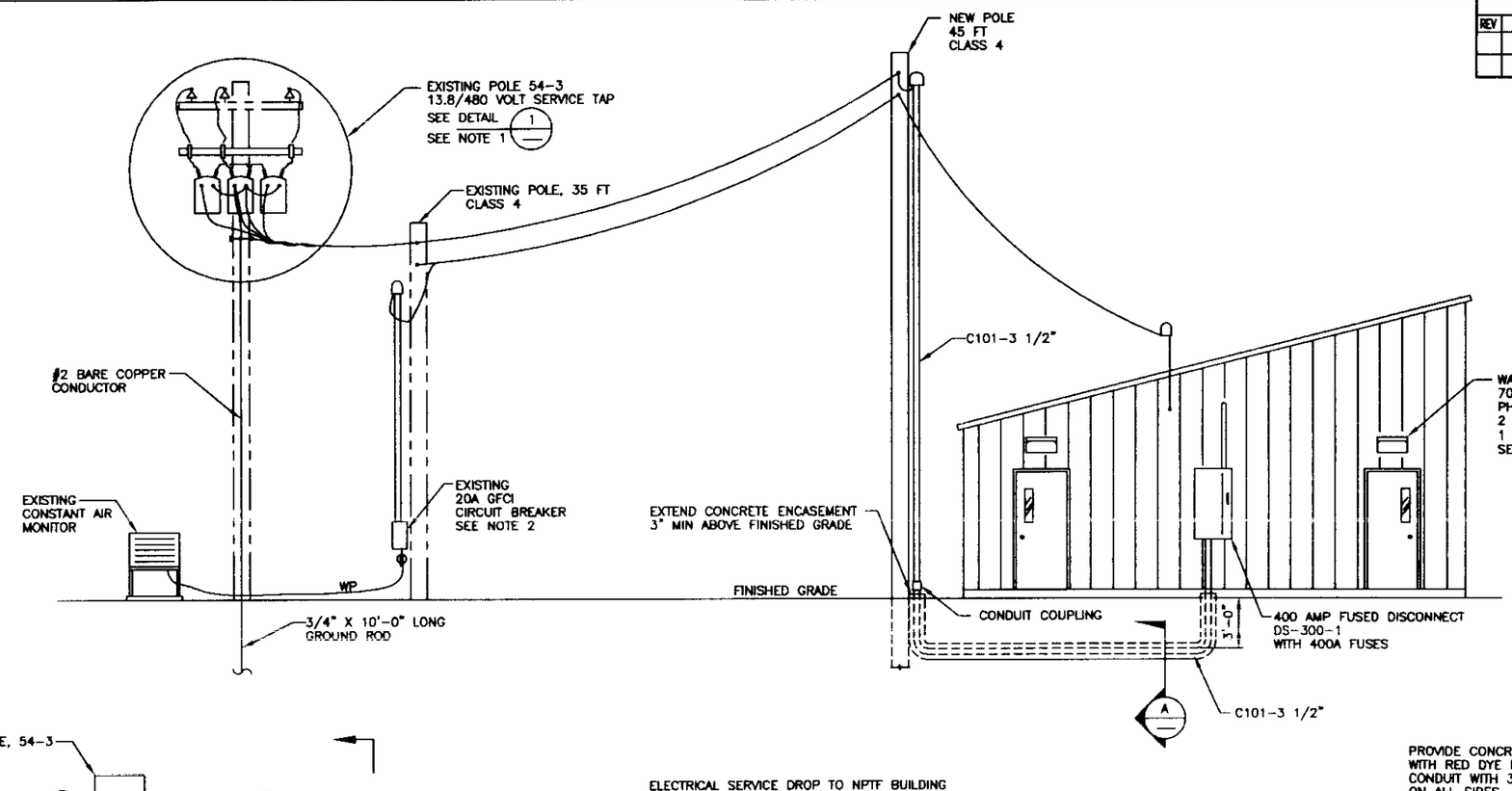

ELECTRICAL SERVICE DROP TO NPTF BUILDING ENCASED IN CONCRETE

SOUTH ELEVATION

SCALE: 1/4"=1'-0"

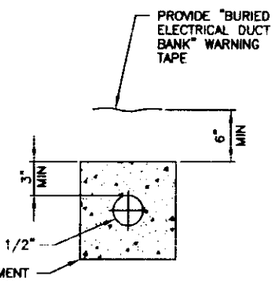

SECTION A

SCALE: 1 1/2"=1'-0"

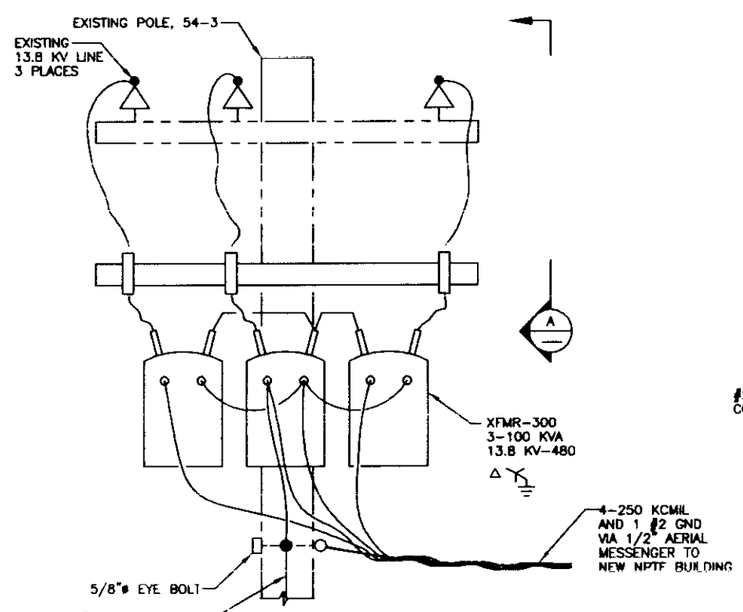

13.8/480 VOLT SERVICE TAP

DETAIL 1

SCALE: 3/4"=1'-0"

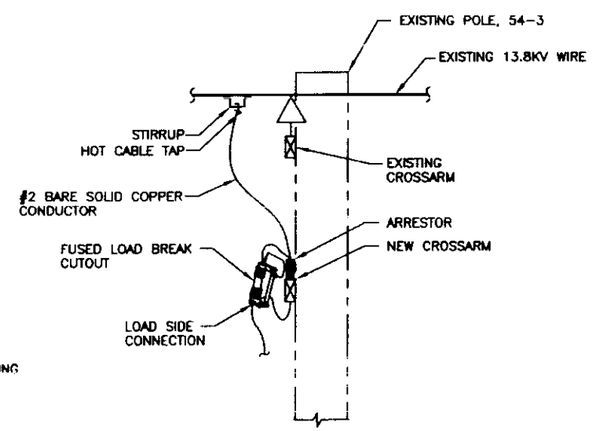

VIEW A

SCALE: 3/4"=1'-0"

NOTES

1. DISCONNECT AND REMOVE THE EXISTING FUSES, CABLES, ARRESTORS AND 25 KVA 1-PHASE TRANSFORMER CURRENTLY MOUNTED ON POLE 54-3. INSTALL XFMR-300, (3-100 KVA TRANSFORMERS), FUSES, SURGE ARRESTORS, GROUNDING AND MOUNTING HARDWARE AS REQUIRED.
2. THE EXISTING 20A GFCI BREAKER AND RECEPTACLE ARE TO BE RE-FED WITH AN AERIAL CABLE (2-1/C #10 AND 1 #10 GND) FROM PANEL DP-301 IN NEW NPTF BUILDING.
3. PROVIDE AND INSTALL A WAL-PAK LIGHTING FIXTURE AT EACH DOORWAY WITH 70 HPS LAMP AND PHOTO ELECTRIC SENSOR CONTROL. MOUNT ABOVE DOORWAY AND WIRE TO DISTRIBUTION PANEL DP-301.

		APPROVALS		DATE
PROJECT NO.S		CONST REV		
		P.M.	J.R.	6-99
		DES MGR	G.D.M.	6-99
DESIGN PHASE		DESIGN	B. PROSKI	2-99
		CHECKED	G.D.M.	2-99
FINAL DESIGN		DRAWN	D.B.	2-99
APPROVED	DATE	SUBCONTRACT NO.		
	10/5/99	RELEASED		

PARSONS

FOR U.S. DEPARTMENT OF ENERGY IDAHO OPERATIONS OFFICE IDAHO FALLS, IDAHO

TAN-1611 OU 1-07B NPTF

BUILDING ELECTRICAL SERVICE

ELEVATION AND DETAIL

SIZE D | SCALE NOTED | REV 0 | A/E DWG. NO. E-6

ADOCS NO.

NPTF E-6.DWG 11/22/99

REVISIONS			
REV	DESCRIPTION	DATE	APPROVED

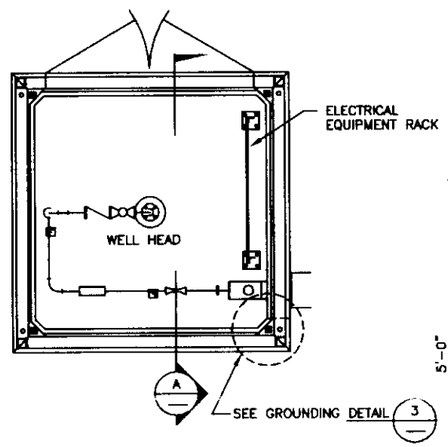

WELLHOUSE PLAN

SCALE: 1/2"=1'-0"

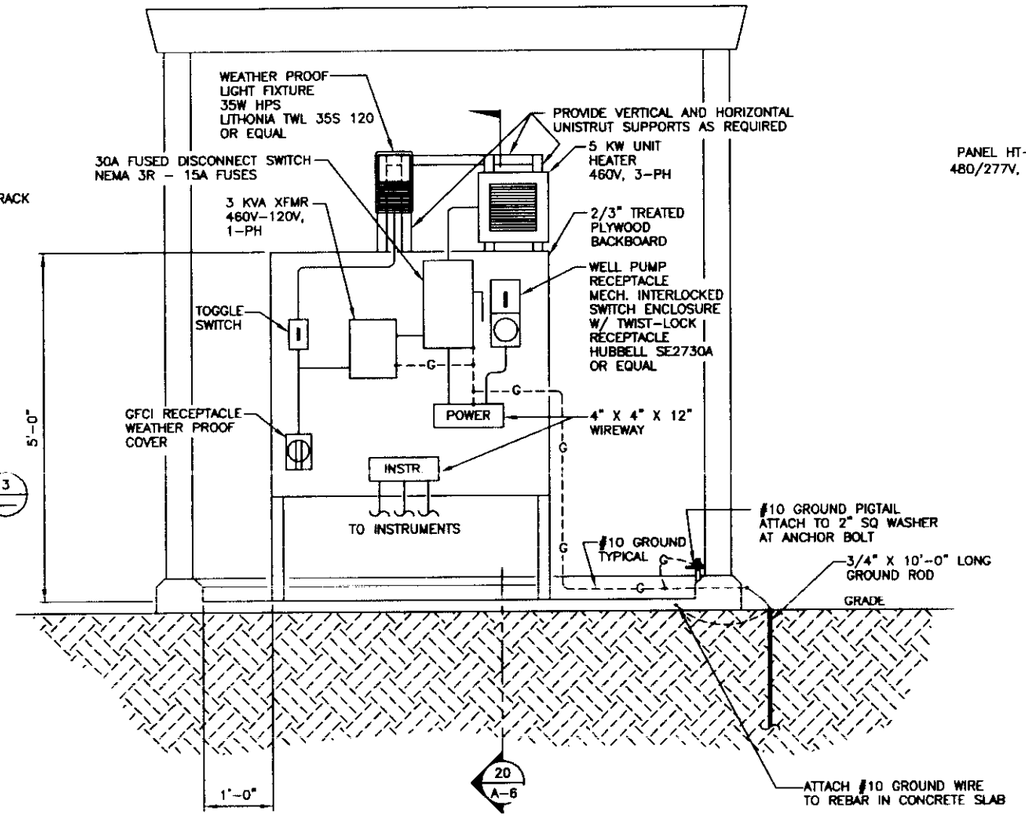

TYPICAL ELECTRICAL BOARD IN WELLHOUSE

SECTION A

SCALE: 1"=1'-0"

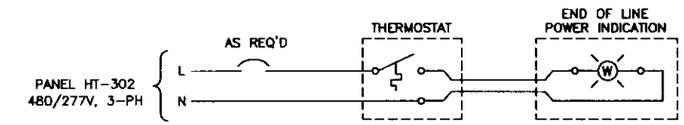

TYPICAL HEAT TRACE CIRCUIT (277 VOLT)

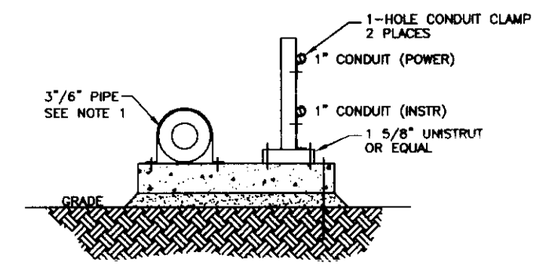

SECTION B

SCALE:1 1/2"=1'-0"

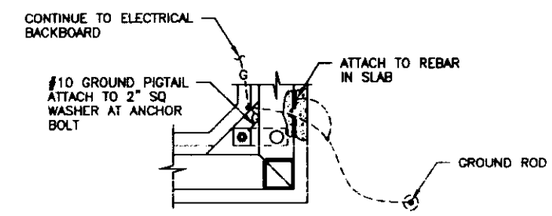

GROUNDING DETAIL AT WELL HOUSE

DETAIL 3

SCALE:1 1/2"=1'-0"

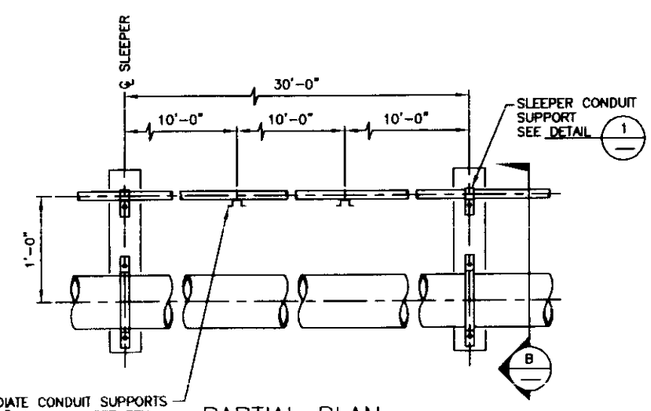

PARTIAL PLAN

SCALE:1 1/2"=1'-0"

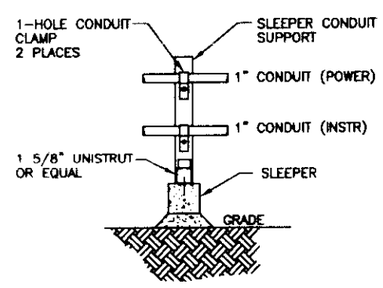

DETAIL 1

SCALE:1 1/2"=1'-0"

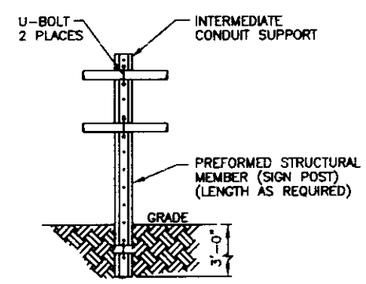

DETAIL 2

SCALE:1 1/2"=1'-0"

TYPICAL CONDUIT SUPPORTS FOR CONDUITS INSTALLED ON GRADE TO WELLS

NOTES:

1. FOR PIPE ATTACHMENT, SEE DRAWINGS P-3 & P-4.

		APPROVALS		DATE
PROJECT NO.S		CONST REV		
		P.M.	J.R.	8-99
		DES MGR	G.D.M.	8-99
DESIGN PHASE		DESIGN	B. PROSKI	2-99
		CHECKED	G.D.M.	2-99
FINAL DESIGN		DRAWN	D.B.	2-99
APPROVED	DATE	SUBCONTRACT NO.		
	6/1/99	RELEASED		

PARSONS

U.S. DEPARTMENT OF ENERGY IDAHO OPERATIONS OFFICE IDAHO FALLS, IDAHO

TAN-1611

OU 1-07B NPTF

WELL HOUSE PLAN AND ELEVATIONS

SIZE	INDEX CODE NUMBER					DRAWING NO.	REV	A/E DWG. NO.
	AREA	TYPE	SQ.	DWG				
D							0	E-7

SCALE NOTED

SPEC CODE

NPTF E-7.DWG 8-4-99 3:52 PM

ADOCS NO.

REVISIONS			
REV	DESCRIPTION	DATE	APPROVED
1	Removed TAN-33 from Extraction System Added Channel Numbers to Wiring Diagrams	11/22/99	[signature]

EQUIPMENT NAME: TAN-38 WELL PUMP MOTOR
EQUIPMENT NO.: P-38
WIRE NO. PREFIX: P38-
(EXCEPT PLC WIRING WHICH IS INDICATED):

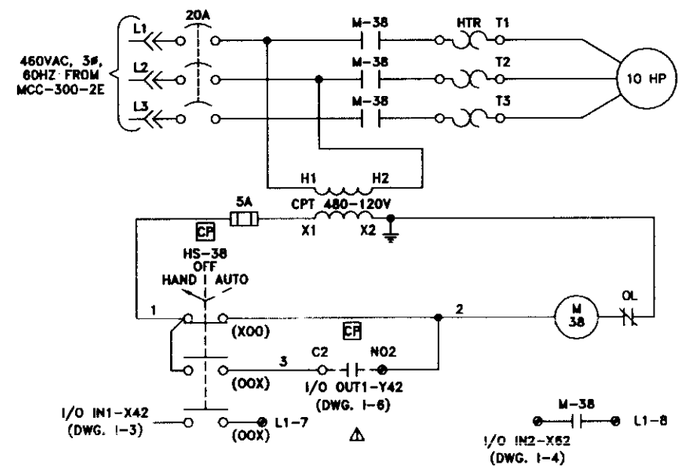

EQUIPMENT NAME: TAN-39 WELL PUMP MOTOR
EQUIPMENT NO.: P-39
WIRE NO. PREFIX: P39-
(EXCEPT PLC WIRING WHICH IS INDICATED):

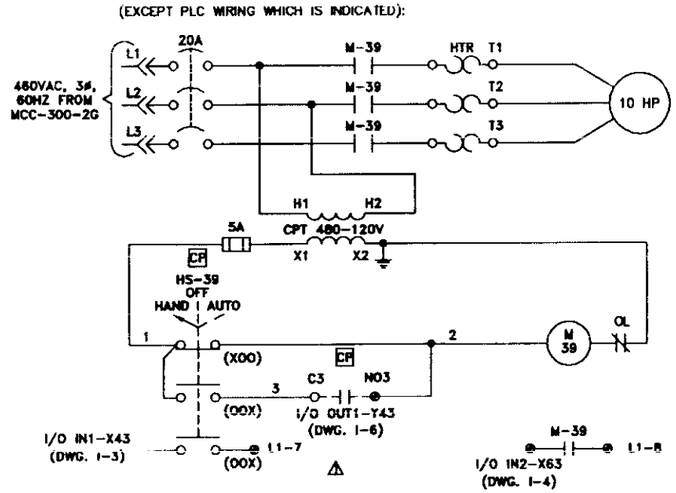

EQUIPMENT NAME: TAN-40 WELL PUMP MOTOR
EQUIPMENT NO.: P-40
WIRE NO. PREFIX: P40-
(EXCEPT PLC WIRING WHICH IS INDICATED):

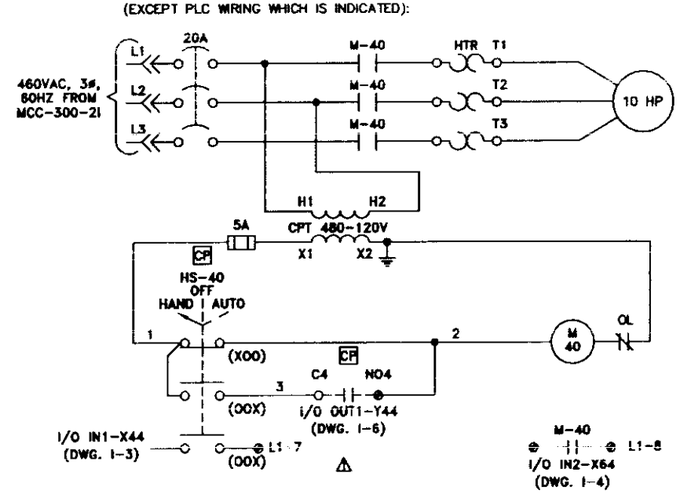

NOTES:

1. UNLESS OTHERWISE NOTED, ALL DEVICES ARE LOCATED IN MOTOR STARTER CUBICLE.

LEGEND:

(V) VENDOR SUPPLIED
● TERMINAL IN MAIN CONTROL PANEL
[L] LOCAL (AT EQUIPMENT)
[CP] CONTROL PANEL
[MC] MOTOR STARTER

PROJECT NO.S	APPROVALS		DATE
	CONST REV		
	P.M.	J.S.R.	8/99
	DES MGR	G.D.M.	8/99
DESIGN PHASE	DESIGN	S.S.	2/99
FINAL DESIGN	CHECKED	G.D.M.	2/99
	DRAWN	S.S.	2/99
APPROVED	DATE	SUBCONTRACT NO.	
G.D.M.	10/99	RELEASED	

PARSONS
U.S. DEPARTMENT OF ENERGY
IDAHO OPERATIONS OFFICE
IDAHO FALLS, IDAHO

OU 1-07B NPTF
ELEMENTARY DIAGRAMS
WELL PUMPS

SIZE D | REV 1 | A/E DWG. NO. E-8
SCALE NONE

NPTF E-8.DWG 11/22/99

ADOCS NO.

REVISIONS			
REV	DESCRIPTION	DATE	APPROVED
1	Added Channel Numbers to Wiring Diagram	11/22/99	

EQUIPMENT NAME: P-302 STRIPPER FEED PUMP NO. 2 MOTOR
EQUIPMENT NO.: P-302
WIRE NO. PREFIX: P302-
(EXCEPT PLC WIRING WHICH IS INDICATED):

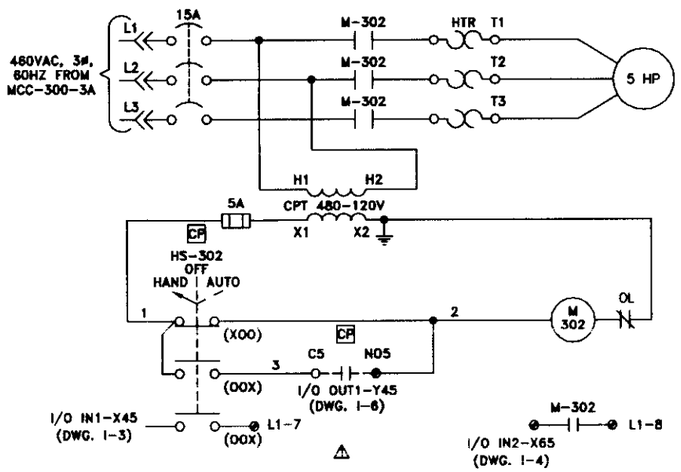

EQUIPMENT NAME: P-325 STRIPPER FEED PUMP NO. 3 MOTOR
EQUIPMENT NO.: P-325
WIRE NO. PREFIX: P325-
(EXCEPT PLC WIRING WHICH IS INDICATED):

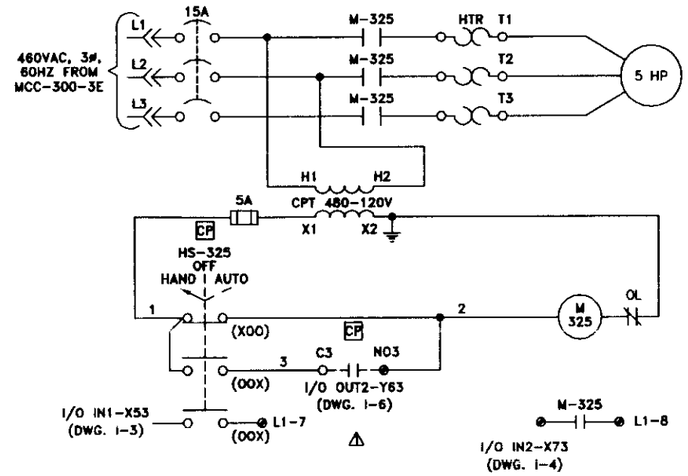

EQUIPMENT NAME: P-303 STRIPPER FEED PUMP NO. 1 MOTOR
EQUIPMENT NO.: P-303
WIRE NO. PREFIX: P303-
(EXCEPT PLC WIRING WHICH IS INDICATED):

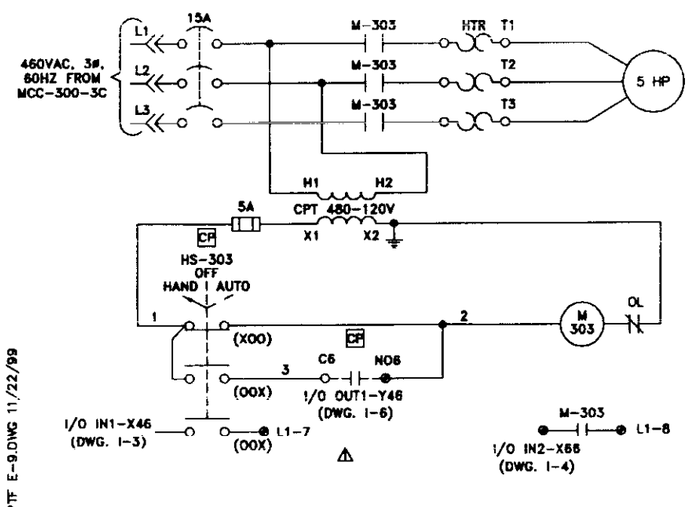

NOTES:

1. UNLESS OTHERWISE NOTED, ALL DEVICES ARE LOCATED IN MOTOR STARTER CUBICLE.

LEGEND:

(V) VENDOR SUPPLIED

● TERMINAL IN MAIN CONTROL PANEL

[L] LOCAL (AT EQUIPMENT)

[CP] CONTROL PANEL

[MC] MOTOR STARTER

NPTF E-9.DWG 11/22/99

		APPROVALS	DATE
PROJECT NO.		CONST REV	
		P.M. J.R.	3/99
		DES MGR G.D.M.	3/99
DESIGN PHASE		DESIGN S. STEVENS	3/99
FINAL DESIGN		CHECKED G.D.M.	3/99
		DRAWN S. STEVENS	3/99
APPROVED	DATE	SUBCONTRACT NO.	
G.D.M.	10/99	RELEASED	

PARSONS

U.S. DEPARTMENT OF ENERGY
IDAHO OPERATIONS OFFICE
IDAHO FALLS, IDAHO

OU 1-07B NPTF
ELEMENTARY DIAGRAMS
STRIPPER FEED PUMPS

SIZE D | SCALE NONE | REV 1 | A/E DWG. NO. E-9

ADOCS NO.

EQUIPMENT NAME: P-304 STRIPPER DISCHARGE PUMP
EQUIPMENT NO.: P-304 NO. 2 MOTOR
WIRE NO. PREFIX: P304-
(EXCEPT PLC WIRING WHICH IS INDICATED):

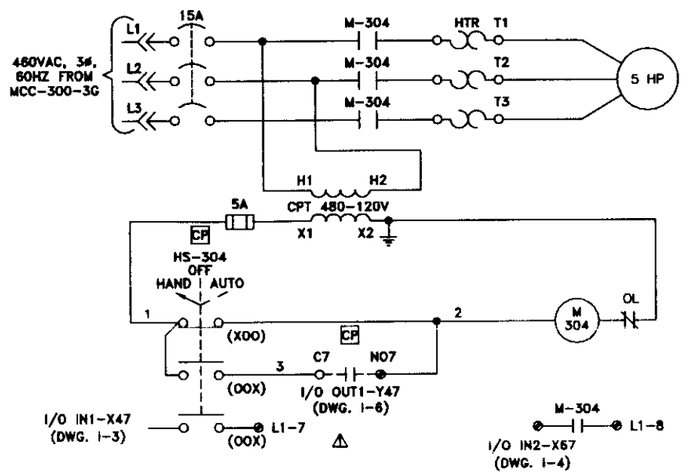

EQUIPMENT NAME: P-326 STRIPPER DISCHARGE PUMP
EQUIPMENT NO.: P-326 NO. 3 MOTOR
WIRE NO. PREFIX: P326-
(EXCEPT PLC WIRING WHICH IS INDICATED):

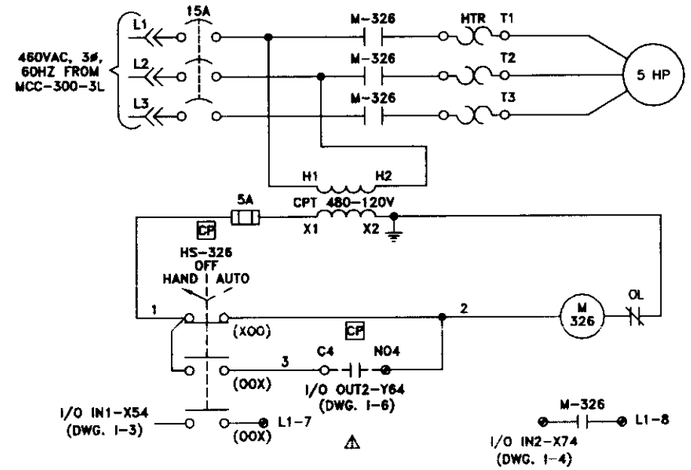

EQUIPMENT NAME: P-305 STRIPPER DISCHARGE PUMP
EQUIPMENT NO.: P-305 NO. 1 MOTOR
WIRE NO. PREFIX: P305-
(EXCEPT PLC WIRING WHICH IS INDICATED):

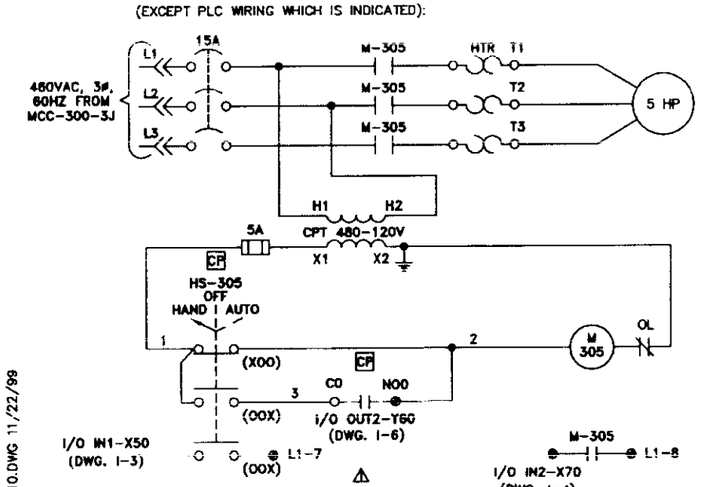

REVISIONS			
REV	DESCRIPTION	DATE	APPROVED
1	Added Channel Number to Wiring Diagram	11/22/99	[signature]

NOTES:

1. UNLESS OTHERWISE NOTED, ALL DEVICES ARE LOCATED IN MOTOR STARTER CUBICLE.

LEGEND:

(V) VENDOR SUPPLIED
● TERMINAL IN MAIN CONTROL PANEL
L LOCAL (AT EQUIPMENT)
CP CONTROL PANEL
MC MOTOR STARTER

NPTF E-10.DWG 11/22/99

PROJECT NO.S	APPROVALS		DATE
	CONST REV		
	P.M.	J.R.	3/99
	DES MGR	G.D.M.	3/99
DESIGN PHASE	DESIGN S.	STEVENS	3/99
	CHECKED	G.D.M.	3/99
FINAL DESIGN	DRAWN S.	STEVENS	3/99
APPROVED	DATE	SUBCONTRACT NO.	
G.D.M.	10/99	RELEASED	

PARSONS — U.S. DEPARTMENT OF ENERGY, IDAHO OPERATIONS OFFICE, IDAHO FALLS, IDAHO

OU 1-07B NPTF
ELEMENTARY DIAGRAMS
STRIPPER DISCHARGE PUMPS

SIZE D — REV 1 — A/E DWG. NO. E-10
SCALE NONE

ADOCS NO.

REVISIONS			
REV	DESCRIPTION	DATE	APPROVED
1	Added Channel Numbers to Wiring Diagram	11/22/99	[signature]

EQUIPMENT NAME: AIR STRIPPER A-310 BLOWER BLO-306
EQUIPMENT NO.: BLO-306
WIRE NO. PREFIX: BLO306-
(EXCEPT PLC WIRING WHICH IS INDICATED):

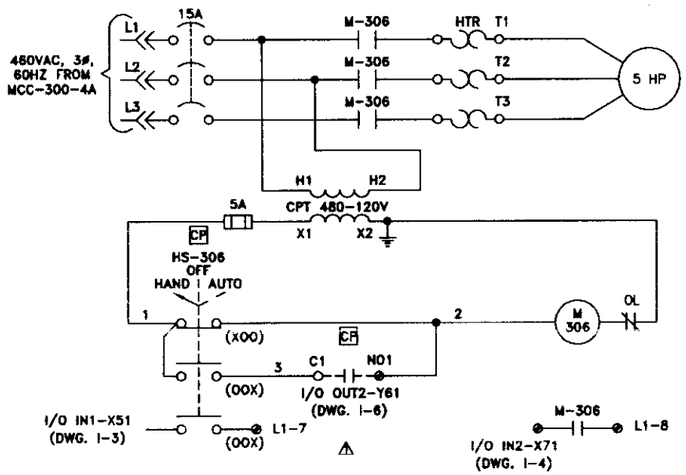

EQUIPMENT NAME: TRANSFER PUMP P-301
EQUIPMENT NO.: P-301
WIRE NO. PREFIX: P301-
(EXCEPT PLC WIRING WHICH IS INDICATED):

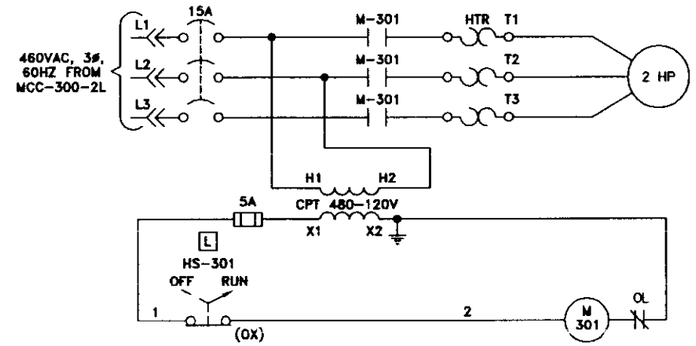

NOTES:

1. UNLESS OTHERWISE NOTED, ALL DEVICES ARE LOCATED IN MOTOR STARTER CUBICLE.

LEGEND:

(V) VENDOR SUPPLIED
⊗ TERMINAL IN MAIN CONTROL PANEL
L LOCAL (AT EQUIPMENT)
CP CONTROL PANEL
MC MOTOR STARTER

EQUIPMENT NAME: SUMP PUMP P-327
EQUIPMENT NO.: P-327
WIRE NO. PREFIX: P327-
(EXCEPT PLC WIRING WHICH IS INDICATED):

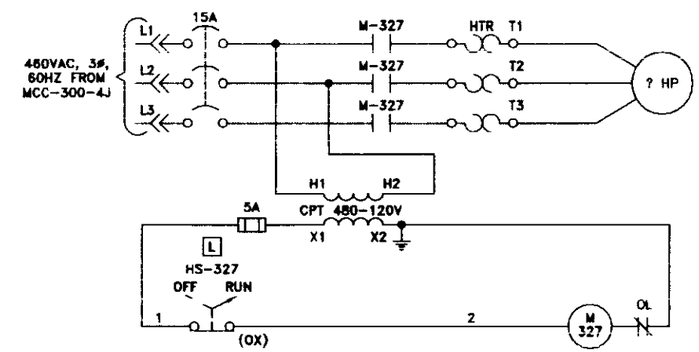

EQUIPMENT NAME: AIR STRIPPER A-311 BLOWER BLO-307
EQUIPMENT NO.: BLO-307
WIRE NO. PREFIX: BLO307-
(EXCEPT PLC WIRING WHICH IS INDICATED):

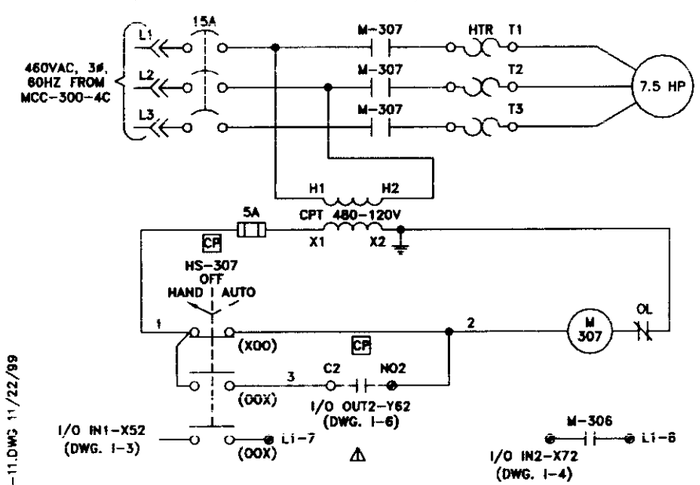

EQUIPMENT NAME: EXHAUST FAN F-357
EQUIPMENT NO.: F-357
WIRE NO. PREFIX: F357-
(EXCEPT PLC WIRING WHICH IS INDICATED):

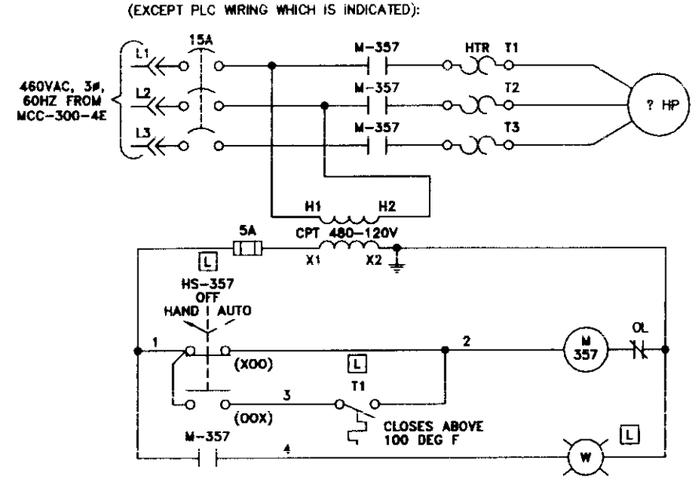

PROJECT NO.S	APPROVALS		DATE
	CONST REV		
	P.M.	J.R.	3/99
	DES MGR	G.D.M.	3/99
DESIGN PHASE	DESIGN S. STEVENS		3/99
FINAL DESIGN	CHECKED	G.D.M.	3/99
	DRAWN	M.J.J.	3/99
APPROVED	DATE	SUBCONTRACT NO.	
G.D.M.	10/99	RELEASED	

PARSONS FOR U.S. DEPARTMENT OF ENERGY IDAHO OPERATIONS OFFICE IDAHO FALLS, IDAHO

OU 1-07B NPTF
ELEMENTARY DIAGRAMS
MISCELLANEOUS MOTORS

SIZE D | REV 1 | A/E DWG. NO. E-11
SCALE NONE

NPTF E-11.DWG 11/22/99

ADOCS NO.

REVISIONS			
REV	DESCRIPTION	DATE	APPROVED
1	Removed TAN-33 from Extraction System	11/22/99	

1. GFCI CURCUIT BREAKERS

DISTRIBUTION PANEL DP-301

100 AMP MAIN CKT BKR, 120/240 VOLT, 1 PHASE, 3 WIRE, 20 CKT
SURFACE MOUNT

CIRCUIT DESCRIPTION	WATTS		WIRE SIZE	BKR TRIP	CKT NO	L1	L2	CKT NO	WIRE SIZE	BKR TRIP	WATTS		CIRCUIT DESCRIPTION
MAIN BREAKER				100	MAIN	X	X	MAIN		100			MAIN BREAKER
INSTRUMENT POWER TO CONTROL PANEL	1000	XXX	#12	20	1	X		2	#10	20	500	XXX	EXIST OUTDOOR AIR MONITOR
LIGHTS - ELECT RM & STORE RM	XXX	750	#12	20	3		X	4	#12	20	XXX	1200	LIGHTS- PROCESS AREA
OUTSIDE LIGHTS	300	XXX	#12	20	5	X		(NOTE 1) 6	#12	20	1080	XXX	RECEPTACLES - PROCESS AREA (6)
RECEPTACLES - ELECT RM & STORE ROOM (4)	XXX	720	#12	20	(NOTE 1) 7		X	(NOTE 1) 8	#12	20	XXX	700	SUMP PUMP P-327 1/4 HP
AUTO DIALER	100	XXX	#12	20	9	X		10	#12	20	100	XXX	RADIO TELEPHONE TERMINAL
SPARE	XXX			20	11		X	12		20	XXX		SPARE
SPACE				-	13	X		14		-			SPACE
SPACE				-	15		X	16		-			SPACE
SPACE					17	X		18					SPACE
SPACE				-	19		X	20		-			SPACE
TOTALS	1400	1470				NEUTRAL BUS GROUND BUS					1680	1900	TOTALS

DISTRIBUTION PANEL HT-302

225 AMP BUS, 480 VOLT, 3 PHASE, 4 WIRE, 42 CKT
SURFACE MOUNT

CIRCUIT DESCRIPTION	WATTS			WIRE SIZE	BKR TRIP	CKT NO	PH A	PH B	PH C	CKT NO	WIRE SIZE	BKR TRIP	WATTS			CIRCUIT DESCRIPTION
RESERVED FOR 277V-1 PH HEAT TRACE CIRCUIT (BY CONTRACTOR)		XXX	XXX			1	X			2				XXX	XXX	RESERVED FOR 277V-1 PH HEAT TRACE CIRCUIT (BY CONTRACTOR)
RESERVED FOR 277V-1 PH HEAT TRACE CIRCUIT (BY CONTRACTOR)	XXX		XXX			3		X		4			XXX		XXX	RESERVED FOR 277V-1 PH HEAT TRACE CIRCUIT (BY CONTRACTOR)
RESERVED FOR 277V-1 PH HEAT TRACE CIRCUIT (BY CONTRACTOR)	XXX	XXX				5			X	6			XXX	XXX		RESERVED FOR 277V-1 PH HEAT TRACE CIRCUIT (BY CONTRACTOR)
RESERVED FOR 277V-1 PH HEAT TRACE CIRCUIT (BY CONTRACTOR)		XXX	XXX			7	X			8				XXX	XXX	RESERVED FOR 277V-1 PH HEAT TRACE CIRCUIT (BY CONTRACTOR)
RESERVED FOR 277V-1 PH HEAT TRACE CIRCUIT (BY CONTRACTOR)	XXX		XXX			9		X		10			XXX		XXX	RESERVED FOR 277V-1 PH HEAT TRACE CIRCUIT (BY CONTRACTOR)
RESERVED FOR 277V-1 PH HEAT TRACE CIRCUIT (BY CONTRACTOR)	XXX	XXX				11			X	12			XXX	XXX		RESERVED FOR 277V-1 PH HEAT TRACE CIRCUIT (BY CONTRACTOR)
UNIT HEATERS-PROCESS AREA HT-351, HT-352 (5 KW EA)	3500	XXX	XXX	#10	30	13	X			14	#10	30	3500	XXX	XXX	UNIT HEATERS -PROCESS AREA HT-353 HT-354 (5 KW EA)
	XXX	3500	XXX			15		X		16			XXX	3500	XXX	
	XXX	XXX	3500			17			X	18			XXX	XXX	3500	
UNIT HEATERS -ELECT & STORE ROOM HT-355, HT-356 (5 KW EA)	3500	XXX	XXX	#10	30	19	X			20		30		XXX	XXX	SPARE ⚠
	XXX	3500	XXX			21		X		22			XXX		XXX	
	XXX	XXX	3500			23			X	24			XXX	XXX		
SPARE		XXX	XXX		30	25	X			26	#12	30	1666	XXX	XXX	UNIT HEATER @TAN 38 (5 KW)
	XXX		XXX			27		X		28			XXX	1666	XXX	
	XXX	XXX				29			X	30			XXX	XXX	1666	
UNIT HEATER @ TAN 39 (5 KW)	1666	XXX	XXX	#12	30	31	X			32	#8	30	1666	XXX	XXX	UNIT HEATER @ TAN-40 (5 KW)
	XXX	1666	XXX			33		X		34			XXX	1666	XXX	
	XXX	XXX	1666			35			X	36			XXX	XXX	1666	
SPARE		XXX	XXX		30	37	X			38		30		XXX	XXX	SPARE
	XXX		XXX			39		X		40			XXX		XXX	
	XXX	XXX				41			X	42			XXX	XXX		
TOTALS	8666	8666	8666				NEUTRAL BUS GROUND BUS						6832	6832	6832	TOTALS

APPROVALS		DATE
CONST REV		
P.M.	J.R.	3/99
DES MGR	G.D.M.	3/99
DESIGN	R. PIROSKI	3/99
CHECKED	G.D.M.	3/99
DRAWN	M.J.J.	3/99
SUBCONTRACT NO.		
RELEASED		

PROJECT NO.S

DESIGN PHASE

FINAL DESIGN

APPROVED	DATE
G.D.M.	10/99

PARSONS

FOR U.S. DEPARTMENT OF ENERGY IDAHO OPERATIONS OFFICE IDAHO FALLS, IDAHO

TAN-1611

OU 1-07B NPTF PANEL SCHEDULES DP-301 AND HT-302

SIZE D | BLOCK CODE NUMBER: AREA TYPE CK DWG | DRAWING NO. | REV 1 | A/E DWG. NO. E-12

SCALE NONE

NPTF E-12.DWG 11/22/99

ADOCS NO. ____

REVISIONS			
REV	DESCRIPTION	DATE	APPROVED
1	Removed TAN-33 from Extraction System	11/22/99	GDM
2	REVISED PER ADDENDUM NO. 1	1/27/00	GDM

POWER CABLE SCHEDULE

CABLE NO.	ROUTING FROM	ROUTING TO	CABLE INFORMATION CONDUCTOR	SIZE	INSUL	FCTN	1	2	3	4	5	6		ROUTING
SRV-P	WIRE TAP TO 13.8KV SERVICE AT POLE 54-3	FUSE CUTOUT AT POLE 54-3	3-1/C	#2	BARE	13.8 TAP	PH A	PH B	PH-C					POLE 54-3
SRV-P2	FUSE CUTOUT AT POLE 54-3	XFMR-300	3-1/C	#2	BARE	13.8 TAP	H1	H2	H3					POLE 54-3
SRV-P3	XFMR-300	WEATHERHEAD AT NEW POLE NEAR NPTF BLDG	4-1/C 1-1/C	250 KCMIL #2 GND	RHH	480V SERV FEEDER	L1	L2	L3	N	GND			AERIAL
SRV-P4	WEATHERHEAD AT NPTF BLDG	FUSED DISC SWITCH DS-1	4-1/C 1-1/C	500 KCMIL #2 GND	RHH	480V SERV FEEDER	L1	L2	L3	N	GND			C101
SRV-P5	FUSED DISC SWITCH DS-1	MCC-300	4-1/C 1-1/C	500 KCMIL #2 GND	THHN	480V, 3 PH PWR FDR	L1-A	L2-B	L3-C	N	GND			C102
DP301-P	MCC-300 CUB 4GL	XFMR-301	2-1/C 1-1/C	#8 #10 GND	THHN	480V, 1 PH PWR FDR	301-H1	301-H4	GND					C103
DP301-P2	XFMR-301	DISTR PANEL DP-301	3-1/C 1-1/C	#4 #10 GND	THHN	120/240 VOLT, 1 PH	301-X1	301-X4	N	GND				C104
HT302-P	MCC-300 CUB 1J	DISTR PANEL HT-302	4-1/C 1-1/C	#4/0 #6 GND	THHN	480/277V, 3 PH PWR	302-L1	302-L2	302-L3	N	GND			C106
P38-P	MCC-300 CUB 2E	TAN-38 WELL PUMP P-38	3-1/C 1-1/C	#12 #12 GND	THHN	480V, 3 PH MTR PWR	P38-T1	P38-T2	P38-T3	GND				C123, PB1, C132
P39-P	MCC-300 CUB 2G	TAN 39 WELL PUMP P-39	3-1/C 1-1/C	#12 #12 GND	THHN	480V, 3 PH MTR PWR	P39-T1	P39-T2	P39-T3	GND				C124, PB1, C133
P40-P	MCC-300 CUB 2J	TAN-40 WELL PUMP P-40	3-1/C 1-1/C	#8 #10 GND	THHN	480V, 3 PH MTR PWR	P40-T1	P40-T2	P40-T3	GND				C124, PB1, C134
P301-P	MCC-300 CUB 2L	TRANSFER PUMP P-301	3-1/C 1-1/C	#12 #12 GND	THHN	480V, 3 PH MTR PWR	P301-T1	P301-T2	P301-T3	GND				C108
P302-P	MCC-300 CUB 3A	FEED PUMP P-302	3-1/C 1-1/C	#12 #12 GND	THHN	480V, 3 PH MTR PWR	P302-T1	P302-T2	P302-T3	GND				C108, TEE, C109
P303-P	MCC-300 CUB 3C	FEED PUMP P-303	3-1/C 1-1/C	#12 #12 GND	THHN	480V, 3 PH MTR PWR	P303-T1	P302-T2	P303-T3	GND				C108, TEE, C110
P304-P	MCC-300 CUB 3G	DISCHARGE PUMP P-304	3-1/C 1-1/C	#12 #12 GND	THHN	480V, 3 PH MTR PWR	P304-T1	P304-T2	P304-T3	GND				C113, TEE, C114
P305-P	MCC-300 CUB 3J	DISCHARGE PUMP P-305	3-1/C 1-1/C	#12 #12 GND	THHN	480V, 3 PH MTR PWR	P305-T1	P305-T2	P305-T3	GND				C113
P325-P	MCC-300 CUB 3E	FEED PUMP P-325	3-1/C 1-1/C	#12 #12 GND	THHN	480V, 3 PH MTR PWR	P325-T1	P325-T2	P325-T3	GND				C108, TEE, C111
P326-P	MCC-300 CUB 3L	DISCHARGE PUMP P-326	3-1/C 1-1/C	#12 #12 GND	THHN	480V, 3 PH MTR PWR	P326-T1	P326-T2	P326-T3	GND				C113, TEE, C115
BLO306-P	MCC-300 CUB 4A	STRIPPER A-310 BLOWER BLO-306	3-1/C 1-1/C	#12 #12 GND	THHN	480V, 3 PH MTR PWR	BLO306-T1	BLO306-T2	BLO306-T3	GND				C118, TEE, C119
BLO307-P	MCC-300 CUB 4C	STRIPPER A-311 BLOWER BLO-307	3-1/C 1-1/C	#12 #12 GND	THHN	480V, 3 PH MTR PWR	BLO307-T1	BLO307-T2	BLO307-T3	GND				C118
P327-P	DP-301	SUMP PUMP P-327	2-1/C 1-1/C	#12 #12 GND	THHN	120V, 1 PH MTR PWR	DP301-8	DP301-N	GND					C121, RECPT, CORD
F357-P	MCC-300 CUB 4E	EXHAUST FAN F-357	3-1/C 1-1/C	#12 #12 GND	THHN	480V, 3 PH MTR PWR	F357-T1	F357-T2	F357-T3	GND				C147
HT351-P	DIST PNL HT-302	PUMP RM UNIT HTRS 351 & 352	3-1/C 1-1/C	#10 #10 GND	THHN	480V, 3 PH FEEDER	HT302-13	HT302-15	HT302-17	GND				C142
HT353-P	DIST PNL HT-302	PUMP RM UNIT HTRS 353 & 354	3-1/C 1-1/C	#10 #10 GND	THHN	480V, 3 PH FEEDER	HT302-14	HT302-16	HT302-18	GND				C143
HT355-P	DIST PNL HT-302	CONTROL ROOM UNIT HTR HT-356	3-1/C 1-1/C	#10 #10 GND	THHN	480V, 3 PH FEEDER	HT302-19	HT302-21	HT302-23	GND				C144
HT356-P	DIST PNL HT-302	STORAGE ROOM UNIT HTR HT-355	3-1/C 1-1/C	#10 #10 GND	THHN	480V, 3 PH FEEDER	HT302-19	HT302-21	HT302-23	GND				C145
TAN38-P	DIST PNL HT 302	TAN-38 UNIT HTR	3-1/C 1-1/C	#12 #12 GND	THHN	480V, 3 PH FEEDER	HT302-26	HT302-28	HT302-30	GND				C151, PB1, C132
TAN39-P	DIST PNL HT-302	TAN-39 UNIT HTR	3-1/C 1-1/C	#12 #12 GND	THHN	480V, 3 PH FEEDER	HT302-31	HT302-33	HT302-35	GND				C151, PB1, C133
TAN40-P	DIST PNL HT-302	TAN-40 UNIT HTR	3-1/C 1-1/C	#8 #10 GND	THHN	480V, 3 PH FEEDER	HT302-32	HT302-34	HT302-36	GND				C151, PB1, C134

NPTF E-13.DWG 11/22/99

APPROVALS		DATE
CONST REV		
P.M.	J.R.	3/99
DES MGR	G.D.M.	3/99
DESIGN	B. PIBOSKI	3/99
CHECKED	G.D.M.	3/99
DRAWN	M.J.J.	3/99
SUBCONTRACT NO.		
RELEASED		

PROJECT NO.S

DESIGN PHASE

FINAL DESIGN

APPROVED	DATE
G.D.M.	10/99

PARSONS

FOR U.S. DEPARTMENT OF ENERGY IDAHO OPERATIONS OFFICE IDAHO FALLS, IDAHO

TAN-1611

OU 1-07B NPTF CABLE SCHEDULE POWER CABLES

SIZE D | SCALE NONE | REV 2 | A/E DWG. NO. E-13

ADOCS NO.

REVISIONS			
REV	DESCRIPTION	DATE	APPROVED
1	Removed TAN-33 from Extraction System	11/22/99	[signature]

CONTROL CABLE SCHEDULE

CABLE NO.	ROUTING		CABLE INFORMATION											
	FROM	TO	CONDUCTOR	SIZE	INSUL	FCTN	1	2	3	4	5	6		ROUTING
P38-C	CONTROL PANEL	MCC-301-CUB 2E	1-5/C	#14	THHN	CONTROL	P38-1	P38-2	L1-8	X62	SPARE			C125
P39-C	CONTROL PANEL	MCC-301- CUB 2G	1-5/C	#14	THHN	CONTROL	P39-1	P39-2	L1-8	X63	SPARE			C125
P40-C	CONTROL PANEL	MCC-301-CUB 2J	1-5/C	#14	THHN	CONTROL	P40-1	P40-2	L1-8	X64	SPARE			C125
P301-C	P301 ON-OFF SW	MCC-301-CUB 1L	1-2/C	#14	THHN	CONTROL	P301-1	P301-2						C108, TEE, C112
P302-C	CONTROL PANEL	MCC-301-CUB 3A	1-5/C	#14	THHN	CONTROL	P302-1	P302-2	L1-8	X65	SPARE			C126
P303-C	CONTROL PANEL	MCC-301-CUB 3C	1-5/C	#14	THHN	CONTROL	P303-1	P303-2	L1-8	X66	SPARE			C126
P304-C	CONTROL PANEL	MCC-301-CUB 3G	1-5/C	#14	THHN	CONTROL	P304-1	P304-2	L1-8	X67	SPARE			C126
P305-C	CONTROL PANEL	MCC-301-CUB 3J	1-5/C	#14	THHN	CONTROL	P305-1	P305-2	L1-8	X70	SPARE			C126
P325-C	CONTROL PANEL	MCC-301- CUB 3E	1-5/C	#14	THHN	CONTROL	P325-1	P325-2	L1-8	X73	SPARE			C126
P326-C	CONTROL PANEL	MCC-301- CUB 3L	1-5/C	#14	THHN	CONTROL	P326-1	P326-2	L1-8	X74	SPARE			C126
BLO306-C	CONTROL PANEL	MCC-301-CUB 4A	1-5/C	#14	THHN	CONTROL	BLO306-1	BLO306-2	L1-8	X71	SPARE			C127
BLO307-C	CONTROL PANEL	MCC-301- CUB 4C	1-5/C	#14	THHN	CONTROL	BLO307-1	BLO307-2	L1-8	X72	SPARE			C127
F357-C	FAN F-357 H-O-A SW	MCC301- CUB 4E	5-1/C	#14	THHN	CONTROL	F357-1	F357-X2	F357-2	F357-4	SPARE			C147, TEE, C148
F357-C2	FAN F-357 H-O-A SW	THERMOSTAT T1	2-1/C	#14	THHN	CONTROL	F357-2	F357-3						C149

NPTF E-14.DWG 11/22/99

PROJECT NO.S	APPROVALS		DATE
	CONST REV		
	P.M.	J.R.	3/99
	DES MGR	G.D.M.	3/99
DESIGN PHASE	DESIGN	B. PROSKI	3/99
FINAL DESIGN	CHECKED	G.D.M.	3/99
	DRAWN	M.J.J.	3/99
APPROVED	DATE	SUBCONTRACT NO.	
G.D.M.	10/99	RELEASED	

PARSONS

FOR U.S. DEPARTMENT OF ENERGY IDAHO OPERATIONS OFFICE IDAHO FALLS, IDAHO

TAN-1611

OU 1-07B NPTF
CABLE SCHEDULE
CONTROL CABLES

SIZE D | INDEX CODE NUMBER: AREA, TYPE, CL, CODE | DRAWING NO. | REV 1 | A/E DWG. NO. E-14

SCALE NONE | SPEC CODE

ADOCS NO. ____

REVISIONS			
REV	DESCRIPTION	DATE	APPROVED
1	Removed TAN-33 from Extraction System	11/22/99	

INSTRUMENT CABLE SCHEDULE

CABLE NO.	ROUTING		CABLE INFORMATION											
	FROM	TO	CONDUCTOR	SIZE	INSUL	FCTN	1	2	3	4	5	6		ROUTING
LT307-I	LT307	CONTROL PANEL	2/C	#16 TWSH	BELDEN #8719	INSTR	X0	0VDC	SHLD					C157
LT308-I	LT308	CONTROL PANEL	2/C	#16 TWSH	BELDEN #8719	INSTR	X1	0VDC	SHLD					C157, TEE, C158
LT309-I	LT309	CONTROL PANEL	2/C	#16 TWSH	BELDEN #8719	INSTR	X2	0VDC	SHLD					C157, TEE, C159
FE38-I	FE-38	FIT-38	2/C	VENDOR		INSTR	GND	IN	SHLD					FIELD
FIT38-I	FIT-38	CONTROL PANEL	2/C	#16 TWSH	BELDEN #8719	INSTR	X11	0VDC	SHLD					C138, PB2, C128
FE-39-I	FE39	FIT-39	2/C	VENDOR		INSTR	GND	IN	SHLD					FIELD
FIT39-I	FIT-39	CONTROL PANEL	2/C	#16 TWSH	BELDEN #8719	INSTR	X12	0VDC	SHLD					C139, PB2, C128
FE40-I	FE-40	FIT-40	2/C	VENDOR		INSTR	GND	IN	SHLD					FIELD
FIT40-I	FIT-40	CONTROL PANEL	2/C	#16 TWSH	BELDEN #8719	INSTR	X13	0VDC	SHLD					C140, PB2, C128
FE313-I	FE-313	FIT-313	2/C	VENDOR		INSTR	GND	IN	SHLD					FIELD
FIT313-I	FIT-313	CONTROL PANEL	2/C	#16 TWSH	BELDEN #8719	INSTR	X20	0VDC	SHLD					C184, PB4, C181
FE314-I	FE-314	FIT-314	2/C	VENDOR		INSTR	GND	IN	SHLD					FIELD
FIT314-I	FIT-314	CONTROL PANEL	2/C	#16 TWSH	BELDEN #8719	INSTR	X21	0VDC	SHLD					C174, PB3, C171
FE317-I	FE-317	FIT-317	2/C	VENDOR		INSTR	GND	IN	SHLD					FIELD
FIT317-I	FIT-317	CONTROL PANEL	2/C	#16 TWSH	BELDEN #8719	INSTR	X22	0VDC	SHLD					C178, PB3, C171
FE318-I	FE-318	FIT-318	2/C	VENDOR		INSTR	GND	IN	SHLD					FIELD
FIT318-I	FIT-318	CONTROL PANEL	2/C	#16 TWSH	BELDEN #8719	INSTR	X23	0VDC	SHLD					C193, PB5, C191
FE319-I	FE-319	FIT-319	2/C	VENDOR		INSTR	GND	IN	SHLD					FIELD
FIT319-I	FIT-319	CONTROL PANEL	2/C	#16 TWSH	BELDEN #8719	INSTR	X30	0VDC	SHLD					C182, PB4, C181
FE320-I	FE-320	FIT-320	2/C	VENDOR		INSTR	GND	IN	SHLD					FIELD
FIT320-I	FIT-320	CONTROL PANEL	2/C	#16 TWSH	BELDEN #8719	INSTR	X31	0VDC	SHLD					C172, PB3, C171
LCV307-P	CONTROL PANEL	LCV-307	3-1/C	#14	THHN	INST PWR	L1-2	N	GND					C161
LCV307-I	CONTROL PANEL	LCV-307	2/C	#16 TWSH	BELDEN #8719	INSTR	Y0	+24VDC	SHLD					C194, PB5, C191
LCV308-P	CONTROL PANEL	LCV-308	3-1/C	#14	THHN	INST PWR	L1-3	N	GND					C161, TEE, C163
LCV308-I	CONTROL PANEL	LCV-308	2/C	#16 TWSH	BELDEN #8719	INSTR	Y10	+24VDC	SHLD					C177, PB3, C171
LCV309-P	CONTROL PANEL	LCV-309	3-1/C	#14	THHN	INST PWR	L1-4	N	GND					C161, TEE, C162
LCV309-I	CONTROL PANEL	LCV-309	2/C	#16 TWSH	BELDEN #8719	INSTR	Y20	+24VDC	SHLD					C187, PB4, C181
CP-P	DP-301	CONTROL PANEL	3-1/C	#12	THHN	INST PWR	301-5L	301-5N	GND					C156
LSHH321-I	LSHH-321	CONTROL PANEL	1-5/C	#16	THHN	INSTR	L1-12	N	GND	L1-9	X100			C167, PB6, C165
LSHH322-I	LSHH-322	CONTROL PANEL	1-5/C	#16	THHN	INSTR	L1-13	N	GND	L1-9	X101			C166, PB6, C165
PSH324-I	PSH-324	CONTROL PANEL	2-1/C	#16	THHN	INSTR	L1-9	X104						C175, PB3, C171
PSL324-I	PSL-324	CONTROL PANEL	2-1/C	#16	THHN	INSTR	L1-9	X105						C176, TEE, C175, PB3, C171
PSH204-I	PSH-204	CONTROL PANEL	2-1/C	#16	THHN	INSTR	L1-9	X102						C185, PB4, C181
PSL204-I	PSL-204	CONTROL PANEL	2-1/C	#16	THHN	INSTR	L1-9	X103						C186, TEE, C185, PB4, C181
LEHIW-I	LEH-IW @ INJECTION WELL	LSH-IW @CP	1-2/C	#16	THHN	INSTR	LEHIW-A	LEHIW-B						C141
LEH38-I	LEH-38 @ TAN 38	LSH-38 @ CP	1-2/C	#16	THHN	INSTR	LEH38-A	LEH38-B						C138
LEH39-I	LEH-39 @ TAN 39	LSH-39 @ CP	1-2/C	#16	THHN	INSTR	LEH39-A	LEH39-B						C139
LEH40-I	LEH-40 @ TAN 40	LSH-40 @ CP	1-2/C	#16	THHN	INSTR	LEH40-A	LEH40-B						C140
LEL38-I	LEL-38 @ TAN 38	LSL-38 @ CP	1-2/C	#16	THHN	INSTR	LEL38-A	LEL38-B						C138
LEL39-I	LEL-39 @ TAN 39	LSL-39 @ CP	1-2/C	#16	THHN	INSTR	LEL39-A	LEL39-B						C139
LEL40-I	LEL-40 @ TAN 40	LSS-40 @ CP	1-2/C	#16	THHN	INSTR	LEL40-A	LEL40-B						C140
LSH306-I	CONTROL PANEL	LSH-306	1-5/C	#16	THHN	INSTR	L1-10	N	GND	L1-8	X75			C168, PB6, C165
LSL306-I	CONTROL PANEL	LSL-306	1-5/C	#16	THHN	INSTR	L1-11	N	GND	L1-8	X76			C169, TEE, C168, PB6, C165
LEH399-I	LEH-399	LSH-399 @ CP	1-2/C	#16	THHN	INSTR	LEH399-A	LEH399-B						C158, PB2, C128
RB1-I	CONTROL PANEL	ROTATING BEACON	3-1/C	#16	THHN	ALARM	Y65	N	GND					C155

NPTF E-15.DWG 11/22/99

	APPROVALS	DATE
PROJECT NO'S	CONST REV	
	P.M. J.R.	3/99
	DES MGR G.D.M.	3/99
DESIGN PHASE	DESIGN B. PROSICI	3/99
	CHECKED G.D.M.	3/99
FINAL DESIGN	DRAWN M.J.J.	3/99
APPROVED DATE	SUBCONTRACT NO.	
G.D.M. 10/99	RELEASED	

PARSONS

FOR: U.S. DEPARTMENT OF ENERGY, IDAHO OPERATIONS OFFICE, IDAHO FALLS, IDAHO

TAN 1611

OU 1-07B NPTF
CABLE SCHEDULE
INSTRUMENT CABLES

SIZE D | SCALE NONE | REV 1 | A/E DWG. NO. E-15

ADOCS NO.

REVISIONS			
REV	DESCRIPTION	DATE	APPROVED
1	Removed TAN-33 from Extraction System	11/22/99	

CONDUIT SCHEDULE

CONDUIT NO	FROM	TO	SIZE	CONTAINS CABLES	REMARKS
C101	WEATHERHEAD @ NEW POLE	DISC SW DS-300-1	3 1/2"	SRV-P4	480 V SERVICE ENTRANCE
C102	DISC SW DS-300-1	MCC-300	3 1/2"	SRV-P5	
C103	MCC-300	XFMR-301	3/4"	DP301-P	
C104	XFMR-301	PANEL DP-301	1"	DP301-P2	
C105					
C106	MCC-300	PANEL HT-302	2"	HT302-P	
C107					
C108	MCC-300	P-301	1"	P301-P, P301-C, P302-P, P303-P, P325-P	
C109	TEE IN C108	P-302	3/4"	P302-P	
C110	TEE IN C108	P-303	3/4"	P303-P	
C111	TEE IN C108	P-325	3/4"	P325-P	
C112	TEE IN C108	P-301 OFF-ON SWITCH	3/4"	P301-C	
C113	MCC-300	P-305	1"	P304-P, P305-P, P326-P	
C114	TEE IN C113	P-304	3/4"	P304-P	
C115	TEE IN C113	P-326	3/4"	P326-P	
C116					
C117					
C118	MCC-300	BLO-307	3/4"	BLO307-P, BLO306-P	
C119	TEE IN C118	BLO-306	3/4"	BLO306-P	
C120					
C121	DP-301	P-327 STARTER/RECPT (SUMP PUMP)	3/4"	P327-P	
C122					
C123	MCC-300	PULLBOX PB-1 (POWER)	1 1/2"	P38-P	
C124	MCC-300	PULLBOX PB-1 (POWER)	1 1/2"	P39-P, P40-P	
C125	CONTROL PANEL	MCC-301	2"	P38-C, P39-C, P40-C	
C126	CONTROL PANEL	MCC-301	2"	P302-C, P303-C, P304-C, P305-C, P325-C, P326-C	
C127	CONTROL PANEL	MCC-301	1 1/2"	BLO310-C, BLO311-C	
C128	CONTROL PANEL	PULLBOX PB-2 (INSTR)	2 1/2"	LEHIW-I, FIT38-I, LEH38-I, LEL38-I, FIT39-I, LEH39-I, LEL39-I, FIT40-I, LEH40-I, LEL40-I, LEH399-I	
C129					
C130					
C131					
C132	PULLBOX PB-1 (POWER)	TAN-38	1"	P38-P, TAN38-P	POWER TO TAN-38
C133	PULLBOX PB-1 (POWER)	TAN-39	1"	P39-P, TAN39-P	POWER TO TAN-39
C134	PULLBOX PB-1 (POWER)	TAN-40	1"	P40-P, TAN40-P	POWER TO TAN-40
C135					
C136					
C137					
C138	PULLBOX PB-2 (INSTR)	TAN-38	1"	FIT38-I, LEH38-I, LEL38-I	INSTR TO TAN-38
C139	PULLBOX PB-2 (INSTR)	TAN-39	1"	FIT39-I, LEH39-I, LEL39-I	INSTR TO TAN 39
C140	PULLBOX PB-2 (INSTR)	TAN-40	1"	FIT40-I, LEH40-I, LEL40-I	INSTR TO TAN-40
C141	PULLBOX PB-2 (INSTR)	INJECTION WELL	1"	LEHIW-I	INSTR TO INJECTION WELL
C142	PANEL HT-302	UNIT HTR HT-351 & HT-352	3/4"	HT351-P	
C143	PANEL HT-302	UNIT HTR HT-353 & HT-354	3/4"	HT353-P	
C144	PANEL HT-302	UNIT HTR HT-355	3/4"	HTR355-P	
C145	PANEL HT-302	UNIT HTR HT-356	3/4"	HTR356-P	
C146					
C147	MCC-300	EXHAUST FAN F357	1"	F357-P, F357-C	
C148	TEE IN C147	FAN F-357 H-O-A SWITCH	1/2"	F357-C	
C149	FAN F-357 H-O-A SWITCH	FAN F357 THERMOSTAT	1/2"	F357-C2	
C150					

NPTF E-16.DWG 11/22/99

APPROVALS		DATE
CONST REV		
P.M.	T.D. J.J.	3/99
DES MGR	G.D.M.	3/99
DESIGN	B. PIROSTICK	3/99
CHECKED	G.D.M.	3/99
DRAWN	M.J.J.	3/99
SUBCONTRACT NO.		
RELEASED		

PROJECT NO.S

DESIGN PHASE: FINAL DESIGN

APPROVED: G.D.M. 10/99 DATE

PARSONS

FOR U.S. DEPARTMENT OF ENERGY IDAHO OPERATIONS OFFICE IDAHO FALLS, IDAHO

TAN-1611

OU 1-07B NPTF CONDUIT SCHEDULE SHEET 1

SIZE D | SCALE NONE | REV 1 | A/E DWG. NO. E-16

ADOCS NO.

REVISIONS			
REV	DESCRIPTION	DATE	APPROVED
1	Removed TAN-33 from Extraction System	11/22/99	[illegible]

CONDUIT SCHEDULE

CONDUIT NO	FROM	TO	SIZE	CONTAINS CABLES	REMARKS
C151	PANEL HT-302	PULLBOX PB-1	1 1/2"	TAN38-P	
C152	PANEL HT-302	PULLBOX PB-1	1 1/2"	TAN39-P, TAN40-P	
C153					
C154					
C155	CONTROL PANEL	ROTATING BEACON LIGHT	3/4"	RB1-I	
C156	PANEL DP-301	CONTROL PANEL	3/4"	CP-P	120V TO CONTROL PANEL
C157					
C158	LEH-399	PULLBOX PB-2	3/4"	LEH399-I	
C159					
C160					
C161	CONTROL PANEL	LCV 307	3/4"	LCV307-P, LCV308-P, LCV309-P	120V POWER TO LCV'S
C162	TEE IN C161	LCV-309	3/4"	LCV307-P	
C163	TEE IN C162	LCV-308	3/4"	LCV308-P	
C164					
C165	CONTROL PANEL	PULLBOX PB-6	2"	LSH306-I, LSL306-I, LSHH321-I, LSHH322-I, PSH204-I, PSL204-I, PSH324-I, PSL324-I	MISC. 120V INSTRUMENTS
C166	PULLBOX PB-6	LSHH-322	3/4"	LSHH322-I	
C167	PULLBOX PB-6	LSHH-321	3/4"	LSHH321-I	
C168	PULLBOX PB-6	LSL-306	3/4"	LSL306-I	
C169	PULLBOX PB-6	LSH-306	3/4"	LSH306-I	
C170					
C171	CONTROL PANEL	PULLBOX PB-3 @ A310	1 1/2"	FIT314-I, FIT317-I, FIT320-I, LT308-I, LCV308-I	A-310 INSTRUMENT CKTS
C172	PULLBOX PB-3 @ A310	FIT-320	3/4"	FIT320-I	
C173	PULLBOX PB-3 @ A310	LT308	3/4"	LT308-I	
C174	PULLBOX PB-3 @ A310	FIT-314	3/4"	FIT314-I	
C175	PULLBOX PB-6	PSH-324	3/4"	PSH324-I, PSL324-I	
C176	TEE IN C175	PSL-324	3/4"	PSL324-I	
C177	PULLBOX PB-3 @ A310	LCV-308	3/4"	LCV308-I	
C178	PULLBOX PB-3 @ A310	FIT-317	3/4"	FIT317-I	
C179					
C180					
C181	CONTROL PANEL	PULLBOX PB-4 @ A-311	1 1/2"	FIT319-I, LT309-I, FIT313-I, LCV309-I	A-311 INSTRUMENT CKTS
C182	PULLBOX PB-4 @ A-311	FIT-319	3/4"	FIT319-I	
C183	PULLBOX PB-4 @ A-311	LT-309	3/4"	LT309-I	
C184	PULLBOX PB-4 @ A-311	FIT-313	3/4"	FIT313-I	
C185	PULLBOX PB-6	PSH-204	3/4"	PSH204-I, PSL204-I	
C186	TEE IN C185	PSL-204	3/4"	PSL204-I	
C187	PULLBOX PB-4 @ A-311	LCV-309	3/4"	LCV309-I	
C188					
C189					
C190					
C191	CONTROL PANEL	PULLBOX PB-5 @ T-300	1"	LT307-I, LCV307-I, FIT318-I	T-300 INSTRUMENT CKTS
C192	PULLBOX PB-5 @ T-300	LT-307	3/4"	LT307-I	
C193	PULLBOX PB-5 @ T-300	FIT-318	3/4"	FIT318-I	
C194	PULLBOX PB-5 @ T-300	LCV-307	3/4"	LCV307-I	
C195					
C196					
C197					
C198					
C199					
C200					

NPTF E-17.DWG 11/22/99

PROJECT NO.S	APPROVALS		DATE
	CONST REV		
	P.M.	J.R.	3/99
	DES MGR	G.D.M.	3/99
DESIGN PHASE	DESIGN	B. PROSKI	3/99
FINAL DESIGN	CHECKED	G.D.M.	3/99
	DRAWN	M.J.J.	3/99
APPROVED	DATE	SUBCONTRACT NO.	
G.D.M.	10/99	RELEASED	

PARSONS — FOR U.S. DEPARTMENT OF ENERGY, IDAHO OPERATIONS OFFICE, IDAHO FALLS, IDAHO

TAN-1611

OU 1-07B NPTF
CONDUIT SCHEDULE
SHEET 2

SIZE D — INDEX CODE NUMBER: AREA, TYPE, CL, CODE — DRAWING NO. — REV 1 — A/E DWG. NO. E-17

SCALE NONE — SPEC CODE

ADOCS NO.

REVISIONS			
REV	DESCRIPTION	DATE	APPROVED
1	Removed TAN-33 from Extraction System	11/22/99	

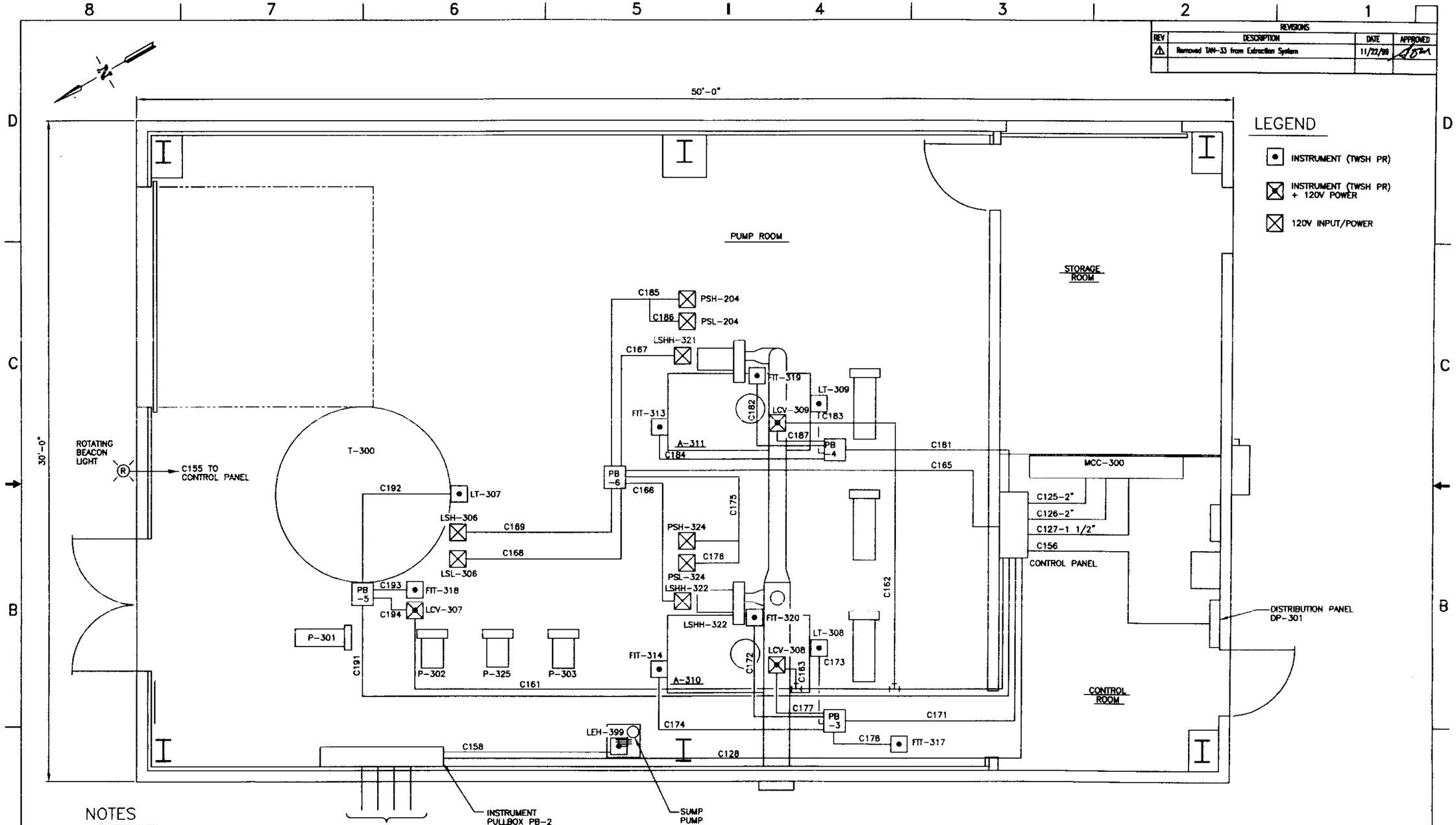

LEGEND

- INSTRUMENT (TWSH PR)
- INSTRUMENT (TWSH PR) + 120V POWER
- 120V INPUT/POWER

NOTES

1. CONDUITS ARE DIAGRAMMATIC. FIELD ROUTE AND SUPPORT CONDUITS AS REQUIRED.
2. DEVICE LOCATIONS ARE APPROXIMATE.
3. ALL CONDUITS SHOWN ARE 3/4" UNLESS NOTED OTHERWISE.

INSTRUMENT CONDUIT PLAN

PROJECT NO.S		APPROVALS	DATE
		CONST REV	
		P.M. J.R.	8-99
		DES MGR C.D.M.	8-99
DESIGN PHASE		DESIGN B. PROSKI	2-99
FINAL DESIGN		CHECKED C.D.M.	2-99
		DRAWN D.B.	2-99
APPROVED	DATE	SUBCONTRACT NO.	
G.D.M.	10/99	RELEASED	

PARSONS

U.S. DEPARTMENT OF ENERGY IDAHO OPERATIONS OFFICE IDAHO FALLS, IDAHO

TAN-1611

OU 1-07B NPTF

INSTRUMENT CONDUIT PLAN

REV D | SCALE 1/2"=1'-0" | REV 1 | A/E DWG. NO. E-18

NPTF E-18.DWG 11/22/99

ADOCS NO.

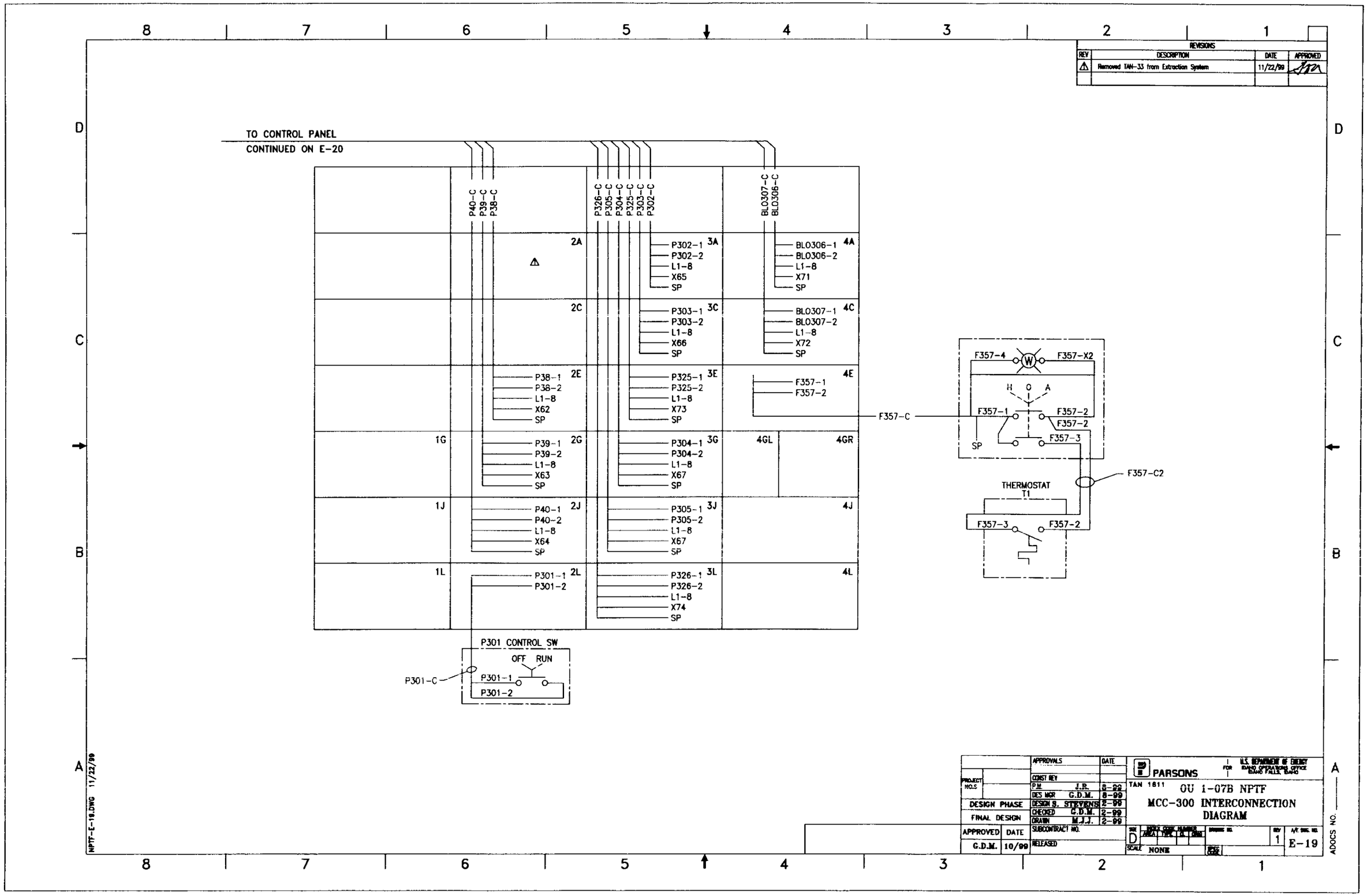

REVISIONS
REV | DESCRIPTION | DATE | APPROVED
1 | Removed TAN-33 from Extraction System | 11/22/99
TO CONTROL PANEL
CONTINUED ON E-20
P40-C P39-C P38-C
P326-C P305-C P304-C P325-C P303-C P302-C
BL0307-C BL0306-C
2A 3A 4A
P302-1 P302-2 L1-8 X65 SP
BL0306-1 BL0306-2 L1-8 X71 SP
2C 3C 4C
P303-1 P303-2 L1-8 X66 SP
BL0307-1 BL0307-2 L1-8 X72 SP
2E 3E 4E
P38-1 P38-2 L1-8 X62 SP
P325-1 P325-2 L1-8 X73 SP
F357-1 F357-2
1G 2G 3G 4GL 4GR
P39-1 P39-2 L1-8 X63 SP
P304-1 P304-2 L1-8 X67 SP
1J 2J 3J 4J
P40-1 P40-2 L1-8 X64 SP
P305-1 P305-2 L1-8 X67 SP
1L 2L 3L 4L
P301-1 P301-2
P326-1 P326-2 L1-8 X74 SP
P301 CONTROL SW
OFF RUN
P301-1
P301-2
P301-C
F357-C
F357-4 F357-X2
H O A
F357-1 F357-2
F357-2
F357-3
SP
F357-C2
THERMOSTAT
T1
F357-3 F357-2
NPTF-E-19.DWG 11/22/99
APPROVALS DATE
CONST REV
P.M. J.R. 8-99
DES MGR G.D.M. 8-99
DESIGN S. STEVENS 2-99
CHECKED G.D.M. 2-99
DRAWN M.J.J. 2-99
SUBCONTRACT NO.
RELEASED
PROJECT NO.S
DESIGN PHASE
FINAL DESIGN
APPROVED DATE
G.D.M. 10/99
PARSONS
FOR U.S. DEPARTMENT OF ENERGY IDAHO OPERATIONS OFFICE IDAHO FALLS, IDAHO
TAN 1611
OU 1-07B NPTF
MCC-300 INTERCONNECTION
DIAGRAM
SIZE D
SCALE NONE
REV 1
A/E DWG. NO. E-19
ADOCS NO.

REV	DESCRIPTION	DATE	APPROVED
1	Removed TAN-33 from Extraction System	11/22/99	

NOTES:

1. CONNECT "N" TO NEUT BUS AND "GND" TO GND BUS. (NOT SHOWN)
2. L1 FUSE BLOCK WITH 10A FUSE, L1-1 THRU L1-16 FUSE BLOCK WITH 3A SLO-BLO FUSE
3. AI1, AI2, AO1, AO2, LSH, LSL & I/O BASE 1 INTERNAL CONTROL PANEL WIRING IS SHOWN ON DWG. I-10.
4. IN1, IN2, IN3, OUT1, OUT2, I/O BASE 2, & DC PWR SUPPLY INTERNAL CONTROL PANEL WIRING IS SHOWN ON DWG. I-11.
5. HS, PB AND OPERATOR TOUCH PANEL INTERNAL CONTROL PANEL WIRING IS SHOWN ON DWG. I-12.

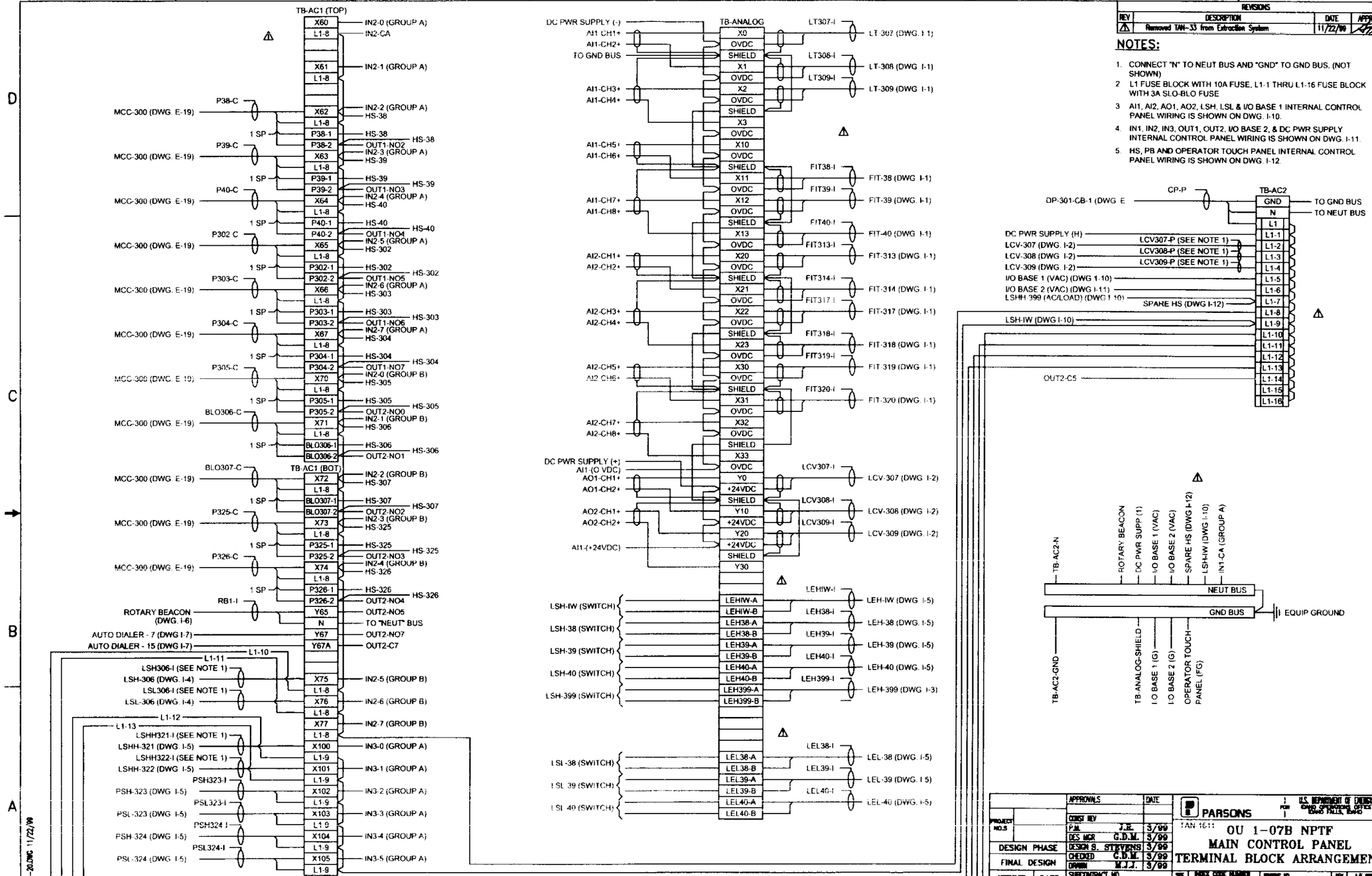

PROJECT NO.5		APPROVALS	DATE
		CONST REV	
DESIGN PHASE		P.M. J.H.	3/99
		DES MGR G.D.M.	3/99
		DESIGN S. STEVENS	3/99
FINAL DESIGN		CHECKED G.D.M.	3/99
		DRAWN M.J.J.	3/99
APPROVED	DATE	SUBCONTRACT NO.	
G.D.M.	10/99	RELEASED	

PARSONS

U.S. DEPARTMENT OF ENERGY IDAHO OPERATIONS OFFICE IDAHO FALLS, IDAHO

TAN 1611

OU 1-07B NPTF MAIN CONTROL PANEL TERMINAL BLOCK ARRANGEMENT

SIZE D | SCALE NONE | REV 1 | A/E DWG. NO. E-20

ADOCS NO.

NPTF E-20.DWG 11/22/99

Appendix B

Specifications

Appendix B
New Pump and Treat Facility
Specification List

Number	Title	Revision	Date
01005	Summary of Work	1	November 1999
02200	Earthwork	2	January 2000
02514	Asphalt Concrete Patching	0	April 1999
03300	Cast-in-Place Concrete	1	November 1999
05100	Structural Steel & Miscellaneous Metals	1	November 1999
05400	Light Gauge Metal Framing	0	April 1999
07190	Vapor Barriers	0	April 1999
07200	Thermal Insulation	0	April 1999
07610	Performed Steel Siding and Roofing	0	April 1999
07901	Joint Sealants	0	April 1999
08110	Steel Doors and Frames	1	November 1999
08362	Insulated Sectional Overhead Doors	0	April 1999
08700	Door Hardware	0	April 1999
09250	Gypsum Drywall	0	April 1999
09610	Spray-Applied Liquid-Tight Floor Coating	0	April 1999
09841	Acoustical Wall and Ceiling Panels	0	April 1999
09900	Painting	0	August 1999
13120	Metal Building Systems	2	January, 2000
13121	Portable Buildings	1	November 1999
13400	Instruments and Equipment	1	November 1999
15025	Welding	1	May 1999
15404	Piping and Plumbing	2	January 2000
15505	Underground Fire Protection/Potable Water Piping	1	May 1999
15508	Air Stripper	1	November 1999
15509	Surge Tank	1	November 1999
15802	HVAC/Ductwork	0	April 1999
16000	Electrical General Provisions	1	November 1999
16109	Switches, Receptacles, and Wall Plates	0	February 1999
16110	Electrical Raceways	1	November 1999
16120	Cable, Wire, Connectors, and Miscellaneous Devices	1	November 1999
16155	Motor Starters	1	November 1999
16160	Panel Boards	1	November 1999
16360	Disconnect Switches	0	February 1999
16370	Overhead Power Distribution	1	November 1999
16450	Grounding	1	November 1999
16460	Transformers, General Lighting and Distribution Dry Type, Indoor and Outdoor, Under 600 Volts	0	February 1999
16482	480 Volt Motor Control Center	0	April 1999
16500	Lighting	0	February 1999
16855	Heating Cables	0	February 1999

SECTION 01005--SUMMARY OF WORK

PART 1--GENERAL

SUMMARY:

The Subcontractor shall furnish plant, labor, material, equipment, and supplies (except Government-furnished materials and/or equipment) and perform work and operations necessary to construct the complete New Pump and Treat Facility (NPTF) with associated yard piping, wellhouse buildings, HVAC, mechanical equipment and utilities, in accordance with the subcontract drawings and these specifications.

Section Includes: Work includes, but is not limited to:

Earthwork –As specified in section 02200 including clear & Grub NPTF building site and wellhouse sites, excavation for building foundation, wellhouse sites, buried piping and utilities, backfilling of all excavation for footings, foundations, pipe and utility trenches, installing all locator ribbon, install and backfill manhole, compacting all backfill, and finish grading for surface drainage.

Asphalt patching –As specified in section 02514 including patching areas disturbed by excavation/trenching through paved areas on the east side of the NPTF building and across Snake Avenue where buried piping and utilities cross the road.

Cast in place concrete –As specified in section 03300 including the NPTF building foundation and flooring, the wellhouse building floors, thrust blocks for FW piping and concrete around buried conduit.

Precast concrete - Provide and place the manhole and piping anchors as called out on the piping drawings and specification sections.

Buildings - Furnish design services, shop drawings, labor, material, equipment, and supplies and perform work and operations necessary to construct the complete NPTF building and wellhouse buildings in accordance with the subcontract drawings and specifications including section 05100 – Structural Steel & Miscellaneous Metals, Section 05400 – Light gage metal framing, section 07190 – Vapor Barriers, section 07200 – Thermal Insulation, section 07610 – Preformed Steel Siding and Roofing, section 07901 – Joint Sealants, section 08110 – Steel Doors and Frames, section 08362 – Insulated Overhead Door, section 08700 – Door Hardware, section 08800 – Glass and Glazing, section 09250 – Gypsum Drywall, section 09810 – Chemical Resistant Coating System, section 09900 – Painting, section 13120 – Metal Building Systems and section 13121 – Portable Buildings.

Electrical – Overhead medium and high voltage power distribution, and associated equipment including poles, crossarms, insulators, line conductors, pole mounted transformers, arresters, fuse cut-outs, pole anchors and associated hardware for pole 54-3 will be provided and installed by INEEL Power management (GFE) in accordance with section 16370. Subcontractor shall furnish labor, material, equipment, supplies, install and test lines from new 3 phase transformers on pole 54-3 to the

NPTF building and all other electrical equipment and apparatuses for the NPTF building, electrical for mechanical equipment located in the NPTF building, wellhouse buildings, well pump power/control, conduit, conduit supports, wiring, lighting, heat tracing, cathodic protection and all other electrical as shown on the subcontract drawings and specified in the 16000 series sections.

Instrumentation: As specified in section 13400 – Instruments and Equipment including instrumentation and controls for all mechanical equipment located in the NPTF building, liquid level detection and controls for the surge tank and air strippers. Includes leak detection equipment located in the NPTF building, manhole and wellhouses.

Piping: Furnish and install all valves, valve tags, tubing, instruments, gages, mounting brackets, pipe, flanges, fittings, couplings, strainers, flow straighteners, hangers, supports, insulation, and appurtenances as required to complete the work as shown on the subcontract drawings for the piping and instrumentation within the New Pump and Treat Facility Building and yard piping including tie-ins to existing pipe lines, insulation and sleeper supports. Work includes all pipe welding and pipe support welding. Yard piping also includes all double wall piping to wells, buried double wall process piping, potable water piping, well "down hole" piping, etc. unless noted "by others" as shown on the drawings. Work includes all cleaning, testing, flushing and sterilizing of the piping systems as specified herein and in related 15000 series sections.

Mechanical Equipment: Furnish, install and test all pumps including well pumps, surge tank, air strippers, blowers and specialty items (listed in this section) as shown on the drawings. Also see related section 15508 – Air Stripper and section 15509 – Surge Tank.

HVAC: As specified in section 15802 – HVAC/Ductwork including all heaters, exhausters, air stripper inlet ductwork, Louvers, air stripper exhaust ductwork and duct supports.

RELATED SECTIONS:

Section 02200 – Earthwork
Section 02514 – Asphalt Concrete Patching
Section 03300 – Cast-in-Place Concrete
Section 05100 – Structural Steel & Miscellaneous Metals
Section 05400 – Light gage metal framing
Section 07190 – Vapor Barriers
Section 07200 – Thermal Insulation
Section 07610 – Preformed Steel Siding and Roofing
Section 07901 – Joint Sealants
Section 08110 – Steel Doors and Frames
Section 08362 – Insulated Overhead Door
Section 08700 – Door Hardware
Section 08800 – Glass and Glazing
Section 09250 – Gypsum Drywall
Section 09810 – Chemical Resistant Coating System

Section 09841 – Acoustical Wall & Ceiling Panels
Section 09900 – Painting
Section 13120 – Metal Building Systems
Section 13121 – Portable Buildings
Section 13400 – Instruments and Equipment
Section 15025 – Welding
Section 15401 – Underground Process Piping
Section 15404 – Piping and Plumbing
Section 15505 – Underground Fire Protection/Potable Water Piping
Section 15508 – Air Stripper
Section 15802– HVAC/Ductwork
Section 16000 – Electrical General Provisions
Section 16109 – Switches, Receptacles and Wall Plates
Section 16110 – Electrical Raceways
Section 16120 – Cable, Wire, Connectors, and Miscellaneous Devices
Section 16155 – Motor Starters
Section 16160 – Panelboards
Section 16360 – Disconnect Switches
Section 16370 – Overhead Power Distribution
Section 16450 – Grounding
Section 16460 – Transformers, General Lighting, and Distribution Dry Type, Indoor and Outdoor, Under 600 Volts
Section 16482 – 480 Volt Motor Control Center
Section 16500 – Lighting
Section 16855 – Heating Cables

REFERENCES:

The following documents, including others referenced therein, form part of this Section to the extent designated herein.

CODE OF FEDERAL REGULATIONS (CFR)

29 CFR 1910 OSHA General Industry Safety Standards
29 CFR 1926 OSHA Construction Industry Safety Standards

LOCKHEED MARTIN IDAHO TECHNOLOGIES COMPANY (LMITCO)

Construction Management Environmental, Health and Safety Requirements

Unless otherwise specified, references in these specifications or on the subcontract drawings to other specifications, codes, standards or manuals which are part of these specifications, but not included herein, shall be the latest edition, including any amendments and revisions, in effect as of the date of this Specification.

SUBMITTALS: Submittals are listed in the related sections and vendor data schedule and include but are not limited to the following:

Shop Drawings and Vendor Data: Copies of shop drawings and vendors' data, as required by the Vendor Data Schedule and specification sections for materials and equipment to be furnished by the Subcontractor shall be submitted by the Subcontractor. When the Subcontractor proposes an "equal" item, data shall be submitted to the Contractor in such detail to clearly illustrate that the item, including components and fabrication thereof, or that adjustment of features to make the item "equal", meets requirements of the subcontract drawings and specifications. The Subcontractor shall submit data for "equal" approval and obtain the Contractor's approval before committing to purchase the proposed "equal" item.

Manufacturers' Operation and Maintenance Manuals: The Subcontractor shall furnish a minimum of 6 copies (unless additional copies are required in the vendor data schedule) of installation, operating and maintenance manuals, for operating equipment and systems, as required by the Vendor Data Schedule and specification sections. Manuals shall be prepared by the manufacturers of the operating equipment or systems furnished and installed under these specifications.

Manuals shall be complete and shall include instructions and sufficient data for lubricating, start-up sequence, operating instructions, special test procedures or instructions recommended by the manufacturer, maintenance procedures, a complete parts list and recommended list of spare parts for normal expected maintenance. Wiring diagrams shall be furnished for electrically operated equipment.

The required number of manuals shall be furnished to the Contractor within 30 calendar days after final shop drawings or vendor data approval has been obtained by the Subcontractor.

Hazardous Chemicals and Substances: Subcontractor shall submit a list of hazardous chemicals and substances in accordance with General Conditions Article 13 for mandatory approval. Chemicals and substances not previously approved for use will require the submittal of MSDS for mandatory approval.

See the Vendor Data Schedule for additional submittal requirements.

QUALITY ASSURANCE:

Quality Assurance Program requirements shall exist to assure that work performed is in conformance with the requirements established by the drawings and this specification. QA Program criteria applicable to this scope of work is addressed in SC-10 of the Special Conditions and these specifications.

Standard Products: The materials and equipment furnished by the Subcontractor shall be standard products of manufacturers regularly engaged in the production of the type of materials and equipment required and shall be of the manufacturer's latest standard designs. Where two or more units of the same type and class of material or equipment are required, the units shall be the product of the same manufacturer, and shall be identical insofar as possible. The component parts of a unit of equipment need not be the products of the manufacturer.

Repair of Damages:

General: Construction materials and equipment, flange facings, threads, machined or painted, and other exposed finished surfaces shall be protected from damage at all times during shipping, handling, construction and installation. Materials and equipment repaired or replaced by the Subcontractor shall be subject to acceptance by the Contractor.

SAFETY, HEALTH AND ENVIRONMENT:

In general work shall be in compliance with the applicable sections of 29 CFR 1910, 29 CFR 1926 and the LMITCO Construction Management Environmental, Health, and Safety Requirements.

DELIVERY STORAGE AND HANDLING

All materials normally packaged shall be delivered to the site in the original, unopened packages with labels intact. Upon arrival, the Subcontractor shall be inspect the materials or equipment for damage.

Materials and equipment shall be stored and handled in accordance with the manufacturer's instructions.

PART 2--PRODUCTS

MATERIALS:

New Materials and Equipment: Materials and equipment received by the Subcontractor in a damaged condition shall be repaired or replaced by the Subcontractor as directed by the Contractor. Materials and equipment damaged by the Subcontractor shall be repaired or replaced by the Subcontractor.

Existing Materials, Equipment and Structures: Existing materials, equipment and structures, including paint and protective coatings, involved under this Subcontract shall be thoroughly inspected by the Subcontractor before starting any work. Any defects or damages, the repair of which are not covered under these specifications or subcontract drawings, shall be reported in writing to the Contractor by the Subcontractor. The Subcontractor shall place reinstalled operating equipment in an operating condition that is at least as good as it was at the time the Subcontractor started work.

Government Furnished Materials (GFE): Items shown on the subcontract documents as (GFE) are materials and/or equipment that is furnished by the Government to be installed by the Subcontractor. A complete and composite list of such material is attached to the Subcontract Specifications and is referred to as the Schedule "X" list.

Hazardous Chemicals and Substances: The Subcontractor shall comply with applicable requirements of 29 CFR 1926.59, Hazard Communication Standard.

Specialty Items:

SP-341, Vacuum breaker, ¾" NPT carbon steel, adjustable from ¼" to 20" Hg vacuum, Hoffman model no. 62 or equal.

SP-342, Straightening vane, manufactured in a symmetrical nest of thin wall steel tubing, beveled on each end. Carbon steel, Line type, Tech Tube Division, Houston, TX, (713) 741-8828 or equal.

SP-343, Straightening vane, manufactured in a symmetrical nest of thin wall steel tubing, beveled on each end. Carbon steel, Flange type, Tech Tube Division, Houston, TX, Ph (713) 741-8828 or equal.

PART 3--CONSTRUCTION AND INSTALLATION

General: Materials and equipment shall be erected or installed only by qualified personnel who are regularly engaged in the trades required to complete the work. The subcontract drawings show the general arrangement and space allocation of the equipment specified. It shall be the Subcontractor's responsibility to verify changes in conditions or rearrangements necessary because of substitutions for specified materials or equipment. Where rearrangements are necessary the Subcontractor shall, before construction or installation, prepare and submit drawings of the proposed rearrangement for approval.

Coordination of Work: Where new work and existing facilities are shown on the drawings, but are not located precisely by dimensions, the Subcontractor shall be responsible for proper location and clearances and for correcting discrepancies and interferences in the work which are a result of his operations. Work done by one trade that must be integrated with work of other trades shall be laid out with due regard to the work done, or to be done, by other trades; particularly if the work done by one trade depends upon completion or proper installation of work done by other trades. The Subcontractor shall cooperate in coordinating his work with work being done by others if their work must be integrated with the Subcontractor's work. The Subcontractor shall notify the Contractor at least one week prior to starting of the date on which the Subcontractor proposes to proceed with the work.

Subsurface Investigation: Prior to any excavation activities, the subcontractor shall obtain written approval by completing and submitting an outage request in accordance with the General Provisions. In addition the contractor will perform a subsurface investigation to determine the location of buried utilities and piping. The subcontractor will be required to comply with all contractor and OSHA requirements during excavation activities and hand excavation will be required in the vicinity of buried items in accordance with the General Provisions.

Workmanship: Work shall be done in a skillful and workmanlike manner. The Subcontractor shall do structural cutting, fitting, patching, repairing and associated work necessary for installation of equipment, piping and electrical conduits, etc. No major cuts or holes, not shown on the drawings, shall be made without prior approval of the Contractor. After the equipment and/or piping is installed, exposed holes, cracks and other defects shall be neatly patched and the patched areas shall match the adjoining materials and finish.

END OF SECTION 01005

SECTION 02200--EARTHWORK

PART 1--GENERAL

SUMMARY:

Section Includes: Work includes, but is not limited to:

Clearing and grubbing as required.

Excavating all materials encountered, of every description, for completion of the Subcontract as shown on the drawings and as specified herein.

Backfilling of all excavation for footings, foundations, pipe and utility trenches, etc.

Installing a locator ribbon above utilities installed under this Subcontract.

Compacting all backfill as specified herein.

Finish grading and grading for surface drainage.

REFERENCES:

The following documents, including others referenced therein, form part of this Section to the extent designated herein.

AMERICAN ASSOCIATION OF STATE HIGHWAY TRANSPORTATION OFFICIALS (AASHTO)

	Standard Specifications for Transportation Materials and Methods of Sampling and Testing
AASHTO M145	Recommended Practice for the Classification of Soils and Soil-Aggregate Mixtures for Highway Construction Purposes
AASHTO T11	Standard Method of Test for Materials Finer Than 75 Micrometer (No. 200) Sieve in Mineral Aggregates by Washing
AASHTO T27	Standard Method of Test for Sieve Analysis of Fine and Coarse Aggregates
AASHTO T99	Standard Method of Test for the Moisture-Density Relations of Soils Using a 5.5 lb (2.6 kg) Rammer and a 12 in. (305 mm) Drop
AASHTO T238	Standard Method of Test for Density of Soil and Soil-Aggregate in Place by Nuclear Methods (Shallow Depth)

CODE OF FEDERAL REGULATIONS

29 CFR 1926	OSHA General Industry Safety Standards, Subpart P

IDAHO TRANSPORTATION DEPARTMENT (ITD)

SSHC Standard Specification for Highway Construction

SUBMITTALS:

Submittals for review:
No Vendor Data required for this section unless an "or-equal" item is proposed. "Or-equal items are to be submitted for approval prior to purchase.

Submittals for information: None

Submittals for project closeout: None

DELIVERY, STORAGE, AND HANDLING:

Explosives, if used, shall be handled, stored, transported, and used within safety limitations established by DOE-ID.

PART 2--PRODUCTS

MATERIALS:

Satisfactory Soil Materials: Satisfactory soil materials are defined as those complying with AASHTO M145, soil classification Groups A-1, A-2-4, A-2-5, and A-3.

Unsatisfactory Soil Materials: Unsatisfactory soil materials are those defined in AASHTO M145 soil classification Groups A-2-6, A-2-7, A-4, A-5, A-6, and A-7; also peat and other highly organic soils.

Backfill and Fill Material: "Satisfactory" soil materials free of clay, rock, gravel larger than 3 in. in any dimension, debris, waste, frozen materials, vegetable and other deleterious matter. Select pit run gravel is available at the Lincoln Boulevard or TAN gravel pits. Gravel pit material and use of the gravel pits shall be at no cost to the Subcontractor. Upon completion of operations involving fill material removal, the Subcontractor shall grade and reshape the disturbed areas. Sloped surfaces shall meet the requirements of OSHA 29 CFR 1926.

Base or Leveling Course Material: Naturally or artificially graded mixture of 3/4 in. maximum size crushed gravel, crushed stone, natural and crushed sand. Material shall meet the requirements of ITD subsection 703.04.

Buried Pipe Identification Ribbon: See the appropriate Piping or Electrical specifications for Buried Pipe Identification Ribbon requirements.

Locator Ribbon: Ribbon shall be 3 in. wide and shall be red for all electrical conduits, electrical cables, and telephone cables. Yellow ribbon shall be used for all buried pipelines. Orange ribbon shall be used on cathodic protection. Ribbon shall be tape manufactured by Reef Industries or Allen Markline or equal and shall have metal foil which is completely encased in plastic so as to be unaffected by cathodic protection systems and can be easily detected by metal detectors. The ribbon shall be printed with the manufacturer's standard wording, "CAUTION ELECTRIC LINE BURIED BELOW," for all electrical conduits, phone lines, etc., "CAUTION BURIED PIPELINE BELOW," for all buried pipelines, and "CAUTION CATHODIC PROTECTION," for all buried cathodic protection systems.

PART 3--EXECUTION

EXCAVATION:

Clearing and Grubbing: All areas to be occupied by new buildings, roadways, storage tanks, berms and other similar structures plus 10 ft outside these areas and 1 ft outside sidewalk areas and pipe trenches, shall be stripped and cleared of all brush, weeds, rubbish and organic matter. All vegetable matter, roots, brush and debris encountered during the stripping operations shall be removed from the cleared areas to a depth of at least 4-in. below the subgrade. Resulting depressions shall be completely backfilled and compacted in accordance with the applicable part of these specifications except in those cleared areas where further excavation is required. Stripped material shall be stockpiled or disposed of as specified hereinafter.

Earth Excavation: Earth excavation includes removal and disposal of pavements and other obstructions visible on ground surface, underground structures and utilities indicated to be demolished and removed, soil material of any classification, and other materials encountered that are not classified as rock excavation or unauthorized excavation.

Rock Excavation: Rock excavation consists of removal and disposal of materials encountered that cannot be excavated without drilling and blasting, or requiring use of special equipment. If rock is encountered during excavation, work shall be stopped pending additional direction from the contractor's representative.

Unauthorized Excavation: Unauthorized excavation consists of removal of materials beyond indicated elevations or dimensions without specific direction by the Contractor. Unauthorized excavation, as well as remedial work directed by the Contractor, shall be at the Subcontractor's expense.

Structural: Excavations for such structures as footings, foundations, and slabs shall be made to the depths shown on the drawings and of sufficient width to allow adequate room for setting and removing forms, installing accessories and inspection. Where concrete foundations or slabs are to be constructed on material other than rock, care shall be taken to prevent disturbing the bottom of the excavation. Excavation to final grade shall not be made until just before concrete forms are to be placed therein. Concrete foundations shall be placed only on undisturbed soil or rock.

Trenches: Trenches shall be of sufficient width to provide adequate room for workmen to perform any necessary service to the materials or items being installed therein and to permit proper compaction of the backfill.

Grade: The bottom of pipe trenches shall be graded to allow for a minimum of 4 in. of compacted sand bedding beneath the pipe. Bell holes shall be shaped so that pipe will be uniformly supported for its entire length on the compacted sand backfill. Hubs or flanges shall be unsupported until the pipeline has been tested, coated, and wrapped, as required.

Stockpiling and Disposal: Excavated material that is suitable and required for backfilling, grading or topsoil, shall be piled in an orderly manner a sufficient distance from the edge of the excavation, but in no case closer than 2 ft, and so located that it will not interfere with normal vehicular or pedestrian traffic. Excavated materials to be used for backfill shall be kept free from vegetation and other objectionable materials. Topsoil to be used for finish grading shall be kept free from subsoil, vegetation and other objectionable materials and stones larger than 1-in. Excavated materials not required or not approved for backfilling, grading or topsoil, shall be disposed of. Unused excavated earth and rock waste and combustible materials shall be hauled to areas designated by the Contractor and disposed of in a manner specified in the Special Conditions.

Unstable Soils: If wet or otherwise unsatisfactory soil is encountered in an excavation, at or below the excavation line, it shall be brought to the attention of the Contractor and removed as directed in accordance with Article 42 , "Differing Site Conditions", of the General Provisions. The bottom of the excavation shall then be brought to the required grade with concrete or compacted backfill as specified hereinafter. Excavation of unstable soil resulting from the Subcontractor's neglect to keep the excavated opening dry, and other over depth excavation not required to satisfactorily complete the work, shall be brought up to the required grade with concrete or compacted backfill as specified hereinafter at the Subcontractor's expense.

Shoring and Bracing: The sides of all excavations shall be sloped or securely shored and braced in accordance with OSHA 29 CFR 1926, Subpart P.

Control of Water: All excavations shall be kept free of standing water. The Subcontractor shall furnish, install and operate the equipment required to keep excavations free from water at all times. Water shall be disposed of in a manner that will not cause injury to property.

Roads: Where excavations are required across roads or streets, one lane shall be kept open to traffic at all times unless otherwise directed. This shall be accomplished by excavating and backfilling only one-half of the road or street at one time.

BACKFILL OR FILL:

General: The excavations shall be cleared of all trash and debris prior to backfilling or filling. All backfill or fill material shall be free from trash, organic matter and frozen particles. Backfilling or filling

shall be done only when approved by the Contractor. In excavations that are shored, shoring and formwork shall be removed or raised as backfill or fill is placed.

Under Footings and Foundations: Footings and foundations for columns and for heavy equipment shall not be placed on earth backfill. Over depths in excavations for such footings and foundations shall be backfilled with concrete. The concrete shall be in accordance with the "Concrete" section of these specifications.

Under Slabs or Pavement: Backfill or fill materials under concrete slabs, floors, sidewalks, and concrete or asphalt pavement including fill for manholes shall be compacted fill material as specified in the "Materials" section, except that the last 2 in. of such fill shall be compacted leveling course material.

Pipelines and Buried Tanks: Bedding for piping shall be compacted sand or other approved granular material unless otherwise shown on the drawings. Bedding material shall extend from a minimum of 4 in. beneath the pipe to a minimum cover of 4 in. The remainder of the trench or excavation shall be backfilled using soil compacted to 90% of maximum density at optimum moisture content as determined by AASHTO T99. Each 8-in., maximum, loose measurement lift shall be compacted before the next lift is placed thereon. For piping buried under roadways, parking areas or other traffic areas, bedding material above the sand/granular material shall be select pit run gravel in accordance with the Materials section compacted to 95% as specified under Compaction.

Overdepth Pipeline Excavation: Where pipe trenches are excavated to an overdepth due to the presence of rock, unstable soil or other unsuitable material, the overdepth shall be backfilled to required grade with compacted sand or other approved granular material.

Placement: Concentrated dumping of backfill or fill material into excavations will not be permitted. No water shall be used for placing, settling or compacting backfill or fill except to obtain optimum moisture content. All material must be placed in uniform layers not to exceed 8 in. loose measurement and brought up simultaneously and evenly on both sides of foundation walls and around underground or covered structures and equipment such as culverts, manholes, storage tanks and pipe. Backfill or fill around piping, and at least 4 in. over, shall be hand placed and compacted prior to pressure testing. Pipe joints shall be left exposed until leak testing has been completed. Care shall be taken when backfilling, filling, or compacting around any buried items or dampproofed walls to prevent injury to the item being covered and to prevent piercing or rupturing the insulation, coating or dampproofing membrane. Loose backfill or fill may be placed as specified hereinafter.

Compaction: Unless otherwise indicated on the drawings or specifications, compact all backfill and fill material under slabs, roads, sidewalks, and other surfaced areas, around foundation walls, culverts, underground tanks and other similar structures and to at least 4 in. compacted depth above all piping in trenches. Unless otherwise indicated, all "compacted" backfill or fill shall be compacted to at least 95% of maximum density at optimum moisture content as determined by AASHTO T99. Each 8-in., maximum, loose measurement lift shall be compacted before the next lift is placed thereon. Compacted backfill or fill density and moisture content may be measured by the Contractor at any

location and depth. Sections of backfill or fill failing to meet the minimum compaction requirements shall be corrected prior to placement of subsequent lifts. No heavy equipment shall be allowed within 5 ft of a structure or the foundation of any structure. No heavy equipment shall be allowed over piping until a minimum of 24 in. of backfill has been compacted over the piping.

Locator Ribbon: The locator ribbon shall be placed in a zone 6 to 12 in. from the ground surface directly over the utility during the backfill and compaction operation.

FIELD QUALITY CONTROL:

Surveillance will be performed by the Contractor's Representative to verify compliance of the work to the drawings and specifications.

END OF SECTION 02200

SECTION 02514--ASPHALT CONCRETE PATCHING

PART 1--GENERAL

SUMMARY:

Provide all work, operations and material required to construct asphalt concrete patching in accordance with the project drawings and these specifications.

Section Includes: Work includes, but is not limited to:

Patching areas disturbed by excavation/trenching through paved areas.

REFERENCES:

The following documents, including others referenced therein, form a part of this Section to the extent designated herein.

AMERICAN ASSOCIATION OF STATE HIGHWAY TRANSPORTATION OFFICIALS (AASHTO)

AASHTO	Standard Specifications for Transportation Materials and Methods of Sampling and Testing
AASHTO M226	Viscosity Graded Asphalt Cement

AMERICAN SOCIETY FOR TESTING AND MATERIALS (ASTM)

ASTM D 946	Standard Specification for Penetration Graded Asphalt Cement for use in Pavement Construction

IDAHO TRANSPORTATION DEPARTMENT (ITD)

ITD SSHC	Standard Specifications for Highway Construction
ITD	Field Test Manual, Part I, Sampling and Test Methods

SUBMITTALS:

Submittals for review:
Sample: Submit a 200-lb sample of aggregate to an independent test laboratory for testing.
Sieve Test Report: Submit sieve test report.
Mix Design Test Report: Submit results of the asphalt concrete mix design test.

Submittals for information : None

Submittals for Project Closeout: None

QUALITY CONTROL:

Regulatory Requirements: (Codes and Standards): Comply with provisions of the following codes and standards, unless otherwise specified herein. Idaho State Specifications are available for inspection at offices of the Division of Highways, State of Idaho, and the Department of Energy (DOE), Idaho Operations Office Headquarters.

AASHTO M226
ASTM D 946
TD SSSHC

PART 2--PRODUCTS

Asphalt: The asphalt cement shall be Viscosity Grade AC-5. Products shall meet applicable requirements of Section 702 of the SSHC, AASHTO M226/Table 1, and ASTM D 946.

Tack Coat: The tack coat shall be an emulsified asphalt, SS-1 or SS-1h, meeting the applicable requirements of Section 702 (SSHC).

Crushed Gravel for Aggregate: The master gradation for aggregate for the asphalt concrete shall be as follows unless modified in writing:

Sieve	Percent Passing
3/4	100
1/2	95-100
3	75-90
No. 4	50-75
No. 8	35-60
No. 30	15-35
No. 50	10-25
No. 200	4-8

PART 3--EXECUTION

QUALITY CONTROL TESTING:

Contractor Supplied Testing: The following tests may be performed by the Contractor's Representative.

Idaho T-125 (Nuclear Densimeter) for asphalt concrete in-place density.

Idaho T-87 for surface smoothness of finished pavement.

Subcontractor Supplied Testing: The Subcontractor shall submit an asphalt concrete mix design for approval a minimum of 5 days before anticipated use. If the mix design has not been used on the INEL within the past two years, a new mix design shall be obtained and tested by an independent laboratory at the expense of the Subcontractor.

New Mix Design Testing:

Aggregate: The Subcontractor shall supply a 200-lb sample of aggregate to an independent test laboratory to determine the gradation and mix design. A sieve report shall be submitted for approval.

The test methods shall be in accordance with the following:

Mechanical Analysis	AASHTO T27
Passing a No. 200 Sieve	AASHTO T11

A tolerance of 2% in the amount passing the maximum size screen will be permitted to allow for reasonable screen wear, providing all oversize material passes a screen having 1/8 in. larger opening.

Composition of Mixture: The asphalt concrete shall be composed of a mixture of aggregate, filler if required, and asphalt. The mix design shall be tested by an independent test laboratory based on the aggregate gradation before mentioned, and shall meet one of the following criteria:

Marshall Method:

Stability:	500-lb minimum
Flow:	8 to 20
Air Voids:	3% to 5%

HVEEM Method:

Stability:	37 minimum (See 405.04 of SSHC)
Swell:	Less than 0.030 in.
Air Voids:	3% to 5%

The mix design test results shall be submitted for approval, and the approved design mix shall be in effect unless modified in writing by the Contractor.

The aggregate and asphalt shall be mixed in accordance with SSHC Section 405.11.

BASE CONSTRUCTION:

The placement and compaction of the base leveling course material shall be in accordance with Division 2 Section, "Earthwork".

SURFACE PREPARATION:

The Subcontractor shall saw cut the existing asphalt pavement back 6 to 10 inches from the edge of excavation in a neat, vertical straight line. Any fractured, heaved, undermined or otherwise damaged asphalt beyond the 6 to 10 inch offset cut shall be "squared out" as directed by the Contractor's Representative and repaved.

TACK COAT:

Immediately prior to replacing any asphalt surfacing, the Subcontractor shall paint all edges of the old mat with an asphalt tack coat. Distribute at rate of 0.10 gal per sq yd of surface.

PLACING AND FINISHING ASPHALT CONCRETE:

General: The asphalt plant mix shall then be spread uniformly and without segregation across the entire width of the area where the surfacing has been removed and where the patch is required. It shall be spread to such a depth that when compacted to its maximum density, the patched surface will match the existing surface. The asphalt concrete shall be compacted to 95% standard density.

Surface Smoothness: When tested with a 10-ft straight edge laid on the finished surface, perpendicular to the trench line, the repaired surface shall vary in no place more than 1/2 in. from the lower edge of the straight edge. The Subcontractor shall "rake" all edges to ensure the availability of a sufficient number of fines to seal the joints.

FIELD QUALITY CONTROL:

Surveillance will be performed by Contractor's Representative to verify compliance of the work to the drawings and specifications.

END OF SECTION 02514

SECTION 03300--CAST IN PLACE CONCRETE

PART 1--GENERAL

SUMMARY:

Section Includes: Work includes, but is not limited to:

Footings and foundations.
Slabs and floors.
Pre-cast trench drain and sump system.
Walks, ramps, and paving.
Conduit encasement.

Related Sections: The following sections contain requirements that relate to the work of this section:

Section 02200, Earthwork for drainage base course under slabs, floors, walks, and paving.
Section 05100, Structural Steel and Miscellaneous Metals for cast-in anchors and embedded structural steel fabrications.
Section 09810, Chemical Resistant Coating Systems for floor coatings on concrete slabs.

REFERENCES:

The following documents, including others referenced therein, form part of this Section to the extent designated herein:

AMERICAN SOCIETY FOR TESTING AND MATERIALS (ASTM)

ASTM C 94 Standard Specification for Ready-Mixed Concrete

The following ASTM specifications are referenced in regard to materials:

ASTM A 615 Standard Specification for Deformed and Plain Billet-Steel Bar for Concrete Reinforcement
ASTM C 33 Standard Specification for Concrete Aggregates
ASTM C 150 Standard Specification for Portland Cement
ASTM C 260 Standard Specification for Air-Entraining Admixtures for Concrete

ASTM C 309 Standard Specification for Liquid Membrane-Forming Compounds for Curing Concrete
ASTM C 494 Standard Specification for Chemical Admixtures for Concrete

ASTM C 618	Standard Specification for Coal Fly Ash and Raw or Calcined Natural Pozzolan for Use as a Mineral Admixture in Concrete

The following ASTM standards shall be used by the inspecting agency for concrete tests or inspections:

ASTM C 31	Standard Practice for Making and Curing Concrete Test Specimens in the Field
ASTM C 39	Standard Test Method for Compressive Strength of Cylindrical Concrete Specimens
ASTM C 143	Standard Test Method for Slump of Hydraulic Cement Concrete
ASTM C 172	Standard Practice for Sampling Freshly Mixed Concrete
ASTM C 231	Standard Test Method for Air Content of Freshly Mixed Concrete by the Pressure Method

AMERICAN CONCRETE INSTITUTE (ACI)

ACI 117	Standard Specifications for Tolerances for Concrete Construction and Materials
ACI 301	Specifications for Structural Concrete for Buildings
ACI 305	Hot Weather Concreting
ACI 306.1	Standard Specification for Cold Weather Concreting
ACI 318	Building Code Requirements for Reinforced Concrete
ACI 347	Guide to Formwork for Concrete

CONCRETE REINFORCING STEEL INSTITUTE, (CRSI)

U.S. DEPT. OF COMMERCE, NATIONAL INSTITUTE OF STANDARDS AND TECHNOLOGY

DOC PS 1	Product Standard for Construction and Industrial Plywood

SUBMITTALS:

Submittals for review:

Concrete Placements: Submit final list of concrete placements for which air entrainments is not required prior to construction start for approval .

Mix Design: Submit final mix design for each grade of concrete used prior to construction start for approval.

Submittals for information:

Batch Tickets: Supply copies of the batch ticket with each load of concrete as completed for information.

Submittals for project closeout: None

QUALITY CONTROL:

Comply with provisions of ACI 301 unless otherwise specified herein.

PART 2--PRODUCTS

FORM MATERIALS:

Forms for Exposed Finish Concrete: Provide continuous, straight, smooth, exposed surfaces. Furnish in largest practicable sizes to minimize number of joints. Provide form material with sufficient thickness to withstand pressure of newly-placed concrete without visible bow or deflection:

Plywood shall comply with American Plywood Association, grade "EXT-DFPA PLYFORM" or better.

Where extra degree of smoothness is required, plywood shall comply with U.S. Product Standard PS-1 "B-B High Density Overlaid Concrete Form," Class I.

Forms for Unexposed Finish Concrete: Form concrete surfaces that will be unexposed in finished structure with plywood, lumber, or metal. Provide lumber dressed on at least 2 sides and one side for tight fit.

Form Coatings: Provide commercial formulation form-coating compounds that will not bond with, stain nor adversely affect concrete surfaces, and will not impair subsequent treatments of concrete surfaces.

Chamfer Strips: Wood, metal, PVC, or rubber strips, 3/4 by 3/4-inch, minimum, unless otherwise indicated.

Form Ties: Factory-fabricated, removable or snap-off metal or glass-fiber-reinforced plastic form ties designed to resist lateral pressure of fresh concrete on forms and to prevent spalling of concrete on removal. Furnish units that will leave no corrodible metal closer than 1 inch to the plane of the exposed concrete surface. Furnish ties that, when removed, will leave holes not larger than 1 inch in diameter in concrete surface.

STEEL REINFORCING MATERIALS:

Reinforcing Bars: ASTM A 615, Grade 60 deformed, as indicated on the drawings. Grade 40 may be used for No. 4 and smaller ties.

Bar Supports for Reinforcement: Provide supports for reinforcement including bolsters, chairs, spacers and other devices for spacing, supporting and fastening reinforcing in place. Use wire bar type supports complying with CRSI recommendations, or approved substitute. Use supports with sand plates or horizontal runners where base material will not support chair legs. Pumice blocks, adobe, bricks, rocks, etc. are not acceptable for rebar or wire mesh supports.

Joint Dowel Bars: Plain-steel bars, ASTM A 615, Grade 60. Cut bars true to length with ends square and free of burrs.

TRENCH DRAIN AND SUMP SYSTEM:

General: Provide manufacturer's standard pre-cast polymeric resin-aggregate concrete surface drainage system, 56,000-lb maximum capacity, with channel sections, sump box, gratings, and accessories.

Channel Assembly: Minimum 4-in. width by 4.5-in. invert depth, pre-sloped interlocking polymeric sections and depth extensions, including closing end cap, and grating, as required and suitable for intended application.

Sump Box: 2-ft by 2-ft by 2-ft, modular, pre-assembled polymeric unit and grating, with cast-in wall opening for interlocking connection with channel sections.

Gratings: Manufacturer's standard, Load Class C, 56,000-lb maximum capacity, perforated stainless steel grating, locking devices and fasteners, in compliance with Americans with Disabilities Act Accessibility Guidelines, Section 4.54.

Accessories: Manufacturer's standard components as required for intended application, including joint sealing epoxy grout, channel support chairs, and channel brace devices, as required for complete installation and suitable for intended application.

Available Products: Subject to compliance to requirements, products of manufacturer's standard system that may be incorporated in the work include Aco Polymer Products, Inc., Model NW100 Series System with Model 465 Grating, or approved equal.

CONCRETE MATERIALS:

Portland Cement: Cement shall conform to ASTM C 150, Type I-II. The cement shall contain no more than 0.60% by weight of alkalies calculated as (Na_2O + 0.658 K_2O).

Aggregate: Fine and coarse aggregate shall conform to ASTM C 33. Maximum coarse aggregate size shall conform to ACI 318 paragraph 3.3.2. Unless otherwise specified, maximum aggregate size shall be 1 1/2 in.

Mixing Water: Potable having no pronounced taste or odor, and containing no deleterious materials.

Air-Entraining Agents (AEA): ASTM C 260.

High Range Water-Reducing Admixture (Superplasticizer): If a superplasticizer is used it shall conform to ASTM C 494, Type F.

Water-Reducing Admixtures: If water-reducing admixtures are used they shall conform to ASTM C 494, Type A, and contain no more than 1% chloride ions.

Calcium Chloride: Calcium chloride is not permitted.

Pozzolans: Pozzolans (fly ash) shall conform to ASTM C 618 Class F, except that the loss on ignition (LOI) shall be less than 2%.

RELATED MATERIALS:

Nonshrink Grout: Provide one of the following or approved equal:

"Masterflow 713;" Master Builders
"Sonogrout;" Sonneborn Building Products
"Five Star Grout;" U.S. Grout Co.

Curing Compound: Curing compound or curing-hardener-sealer compound shall comply with ASTM C 309, Type I, Class A.

The compound shall be compatible with adhesives, paint, and floor coating systems if it is to be applied in areas to receive these materials. The number of coats shall be as recommended by the manufacturer, but in any case, floor slabs to be left exposed shall receive at least a second coat just after final clean-up. Comply with requirements for preparation of finishing systems specified in other Sections, including omission of curing compound if required for finishing systems installation.

Bonding Compound: Provide one of the following, or approved equal:

"Everbond" L & M Construction Chemical Corporation
"Sikabond" Sika Corporation
"Sonocrete" Sonneborn Building Products
"Weld-Crete" Larsen Products Corporation.

Joint-Sealing Compound: Provide a polyurethane joint sealant material.

Expansion Joint Material: Provide 1/2-in. asphalt impregnated fibrous expansion material.

Red Coloring for Electrical Duct Encasement: Commercial grade red iron oxide, 3 lb per sack of cement.

PROPORTIONING AND DESIGN OF MIXES:

Mix Design: Prepare design mixes for each type and strength of concrete by either laboratory trial batch or field experience methods as specified in ACI 318.

Design mixes to provide normal weight concrete with the following specified 28-day compressive strengths, minimum, as indicated on drawings and schedules:

Class 20: 2000 psi (for conduit encasement)
Class 25: 2500 psi
Class 30: 3000 psi
Class 40: 4000 psi (structural concrete)

See FIELD QUALITY CONTROL of this specification for acceptance criteria.

Adjustment to concrete mixes may be requested by the Subcontractor when characteristics of materials, job conditions, weather, test results, or other circumstances warrant. Revised mix designs must be submitted and approved prior to use.

The concrete mix shall contain a pozzolan (fly ash) unless otherwise approved by the Contractor's Representative.

Concrete in hard-to-place locations shall utilize a high-range water reducer. No other water-reducer shall be used with a high-range water-reducer.

Durability: Concrete which will be subject to freezing and thawing, weathering, or deicer chemicals shall be air-entrained. Add air-entraining agent (AEA) at the manufacturer's prescribed rate to result in concrete at point of placement having air content within the following limits:

	Air content (percent)	
Maximum aggregate size (in.)	Severe exposure	Moderate exposure
1/2	5 1/2 to 8 1/2	4 to 7
3/4	4 1/2 to 7 1/2	3 1/2 to 6 1/2
1	4 1/2 to 7 1/2	3 to 6
1 1/2	4 to 7	3 to 6

The Subcontractor shall submit a list of all concrete placements for which air entrainment is not required for review and approval.

Concrete which will be subject to deicer chemicals or freezing and thawing in a moist condition shall have a minimum 28 days compressive strength of 4,500 psi and a maximum water-cementitious materials ratio of 0.45.

Slump Limits: Proportion and design mixes to result in concrete slump at point of placement as follows:

Reinforced foundations: 3 in. ± 1 in.

Slabs and other structural concrete: 3 1/2 in. ± 1 1/2 in.

Red concrete for conduit encasement: Not less than 3 in. and not more than 6 in.

Maximum slump for concrete using a high-range water-reducer may be increased to 8 in. at point of placement.

MIXING AND DELIVERY:

The manufacture and delivery of all concrete shall conform to ASTM C 94 except as modified herein. Hand-mixed concrete is prohibited.

When concrete arrives at the job site with slump below that suitable for placing, as indicated by the specification, water may be added only if the maximum permissible water-cement ratio and the maximum permissible slump is not exceeded. Any water added to bring the slump within required limits shall be injected in such a manner that uniformity requirements are met. Water shall be incorporated by additional mixing equal to at least half of the total mixing required or 30 drum revolutions at rated mixing speed, whichever is more. Additional AEA may be introduced during this mixing period if necessary to meet specifications. Neither water nor AEA shall be added to the batch at any later time.

Concrete uniformity shall meet the requirements of ASTM C 94 except as modified herein. After final mixing is complete, visible lumps, nonconformance to uniformity requirements, or failure to meet specified slump, entrained air and temperature requirements shall be considered cause for rejecting the remainder of the load. In addition, failure of the ready-mix truck drum to meet uniformity requirements will be deemed cause for rejection of the mixing equipment until adequate repairs have been made.

Discharge of the concrete shall be completed within 1.5 hrs, or before the drum has revolved 300 revolutions, whichever comes first, after the introduction of mixing water to the cement and aggregates. The Contractor may extend this 1.5 hr limit if the concrete still meets all specified requirements after 1.5 hrs. (Additional testing to verify conformance to

specifications may be necessary.) In hot weather or under conditions contributing to quick stiffening of the concrete a time limit less than 1.5 hrs may be designated by the Contractor.

High-range water-reducing admixtures (superplasticizer) shall be added to the mixer at the job site, and then be allowed to mix for at least 5 min.

Concrete that is rejected for failure to meet any of the above requirements will be evaluated by the Contractor and may be removed and replaced at the expense of the Subcontractor.

Hot or Cold Weather Concreting: Methods and means of batching, mixing, and delivery of concrete in hot or cold weather shall comply with ACI-301 or ACI-306.1

SOURCE QUALITY CONTROL:

The Subcontractor shall provide the necessary testing and monitoring to qualify proposed materials and establish mix designs.

PART 3--EXECUTION

FORMS:

Unless otherwise shown on the drawings, all forms shall be straight and plumb, rigid and mortar tight. All forms shall be braced, tied and supported sufficiently to maintain their required position during and after the placing of concrete. Joints shall be sufficiently tight to prevent mortar leakage. Where shown on the drawings, suitable moldings shall be placed in forms to shape edges or surfaces of concrete members. All formwork shall conform to the guidelines in ACI 347.

All exposed corners of concrete shall be chamfered 1 in.

Form Ties: Use factory-fabricated, adjustable-length, removable or snapoff metal form ties, designed to prevent form deflection, and to prevent spalling concrete surface upon removal:

Unless otherwise indicated, provide ties so those portions remaining within concrete after removal will not be within 1 in. of any exposed concrete surface.

Form ties for walls subject to hydrostatic pressure shall have water seals.

Provisions for Other Trades: Provide openings in concrete formwork to accommodate work of other trades.

Tolerances: Unless otherwise noted on the drawings, formwork shall be constructed so that the concrete surfaces conform to the tolerance limits listed in ACI 117.

Preparation of Form Surfaces: Coat contact surfaces of forms with a form-coating compound before reinforcement is placed. Do not allow form-coating compound to come into contact with reinforcement or with concrete surfaces against which fresh concrete will be placed.

PLACING REINFORCEMENT:

Clean reinforcement of loose rust and mill scale, earth, ice, and other materials that reduce or destroy bond with concrete.

Accurately position, support and secure reinforcement against displacement by formwork, construction, or concrete placement operations.

Place reinforcement to obtain at least minimum coverages for concrete protection. Unless otherwise indicated, reinforcement position shall be as necessary to meet coverage, spacing and placement requirements specified in ACI 318, Chapter 7.

Unless otherwise shown on the drawings, splicing of reinforcement shall be in accordance with ACI 318, Chapters 7 and 12. Unless otherwise indicated on the drawings, all splices shall be Class B tension splices for regular bars.

INSTALLATION OF TRENCH DRAIN SYSTEM:

General: Install system components securely, using manufacturer's standard accessories, braces, and support chairs, and set level, true, and plane, according to manufacturer's written instructions. Ensure sufficient clearance to excavation and compacted base course for minimum monolithic concrete cover as indicated. Drill-out and remove preformed opening in sump box for connection with interlocking channels, and set box securely in place. Set sequential channel sections level with channel braces and support chairs, for pre-sloped inverts to sump box. Set top of channels and box unit at 1/4-in inset below tooled concrete edge. Interlock units and seal joints liquid-tight, using manufacturer's joint seal epoxy grout. Install grating and locking devices after concrete is placed, finished, and coated.

JOINTS:

Construction Joints: Locate and install construction joints, when not shown on drawings, so as not to impair strength and appearance of the structure, and as acceptable to the Contractor's Representative.

Provide keyways at least 1 1/2 in. deep in all construction joints unless otherwise noted.

Isolation (Expansion) Joints in Slabs-on-Ground: Construct isolation joints in slabs-on-ground at points of contact between slabs on ground and vertical surfaces, such as column pedestals, foundations walls, and as indicated on the drawings. Provide expansion joint material in all isolation joints. Material shall be placed 1/2 in. below slab elevation and extend the full depth of the slab.

Control Joints (Contraction) in Slabs-on-Ground: Construct control joints as shown on the drawings. Joints shall be sealed with a polyurethane sealant material per manufacturer's recommendation. Saw cutting shall conform to ACI 301, Section 11.5.

Asphalt and Slabs-On-Ground Interface: Sawcut existing asphalt where concrete and existing asphalt pavement are to meet in order to provide a straight, clean joint.

INSTALLATION OF EMBEDDED ITEMS:

Set and build into work anchorage devices and other embedded items required for other work that is attached to, or supported by cast-in-place concrete. Secure all such items firmly in position.

CONCRETE PLACEMENT:

Preplacement Inspection: Completed formwork, reinforcing steel, and items to be embedded shall be inspected and approved prior to placement. However, such approval shall in no way release the Subcontractor from responsibility for acceptable and satisfactorily completed work. For concrete cast against soil, the soil shall be free from frost or ice and shall be wetted down before placement.

Placing Concrete in Slabs-on-Ground: Except at joints as shown on the drawings, place concrete for slabs-on-ground, including integral curbs, in monolithic pours without joints.

Placing Concrete in Forms: The concrete shall be deposited continuously in horizontal layers not more than 2 ft in depth with each succeeding layer placed before the preceding layer has reached its initial set.

Consolidation: During and immediately after placing, all concrete shall be consolidated sufficiently to provide thorough placement around all reinforcement, embedded items, and into corners of forms without segregating the mix. Vibration shall penetrate the placed layer and at least 6-in. into the preceding layer. Do not use vibrators to move concrete inside the forms. A spare vibrator shall be on hand at the job site and available to substitute for any other vibrator which fails during placement.

Dropping of Concrete: Maximum allowable free vertical drop shall be 5 ft, but dropping of concrete from this height through reinforcement (as in columns and walls), or other conditions causing segregation, shall be avoided. For drops greater than 5 ft, a confining device shall be used, subject to the approval of the Contractor.

Cold Weather Placing: Protect concrete work from damage or reduced strength which could be caused by frost, freezing, or low temperatures, in compliance with ACI 306 and as specified herein. Minimum concrete temperature as placed and maintained shall be 55 deg F, or as required by ACI-306, Table 3.1, line 1.

Hot Weather Placing: When hot weather conditions that would seriously impair quality and strength of concrete exist, place concrete in compliance with ACI 305 and as specified herein:

Cool mixing drum and/or ingredients before mixing to maintain concrete temperature below 95° F at time of placement.

FINISH OF FORMED SURFACES:

Rough Form Finish (RfFm): Provide as-cast rough form finish to formed concrete surfaces that are to be concealed in finish work or by other construction, unless otherwise indicated.

Standard rough form finish shall be the concrete surface having the texture imparted by the form facing material used, with tie holes and defective areas repaired and patched and all fins and other projections exceeding 1/4 in. in height rubbed down or chipped off.

Smooth Form Finish (SmFm): Provide as-cast smooth form finish for formed concrete surfaces that are exposed-to-view, or that are covered with a coating material applied directly to concrete, or a covering material bonded to concrete such as waterproofing, dampproofing, painting, or other similar system.

Produce smooth form finish (SmFm) by selecting form material to impart a smooth, hard, uniform texture and arranging them orderly and symmetrically with a minimum of seams. Repair and patch defective areas with fins or other projections completely removed and smoothed.

Related Unformed Surfaces: At tops of curbs, horizontal offsets, and similar unformed surfaces occurring adjacent to formed surfaces, strike off smooth and finish with texture matching adjacent formed surfaces.

SLAB FINISHES:

Float Finish (Flt): Apply float finish to monolithic slab surfaces to receive trowel finish and other finishes as hereinafter specified, and slab surfaces which are to be covered with membrane or elastic waterproofing, membrane or elastic roofing, and as otherwise shown on drawings or in schedules.

After screeding, consolidating, and leveling concrete slabs, do not work surface until ready for floating. Begin floating when surface water has disappeared or when concrete has stiffened sufficiently to permit operation of power-driven floats, or both. Consolidate surface with power driven floats, or by hand-floating if area is small or inaccessible to power units. Check and level surface plane to a tolerance not exceeding 1/4 in. in 10 ft when tested with a 10-ft straightedge placed on surface at not less than two different angles. Cut down high spots and fill low spots. Uniformly slope surfaces to drains. Immediately after leveling, refloat surface to uniform, smooth, granular texture.

Trowel Finish (Trw): Apply trowel finish to monolithic slab surfaces to be exposed to view, unless otherwise indicated, and slab surfaces to be covered with paint, or other thin-film finish coating system.

After floating, begin first trowel finish operation using power-driven trowel. Begin final troweling when surface produces ringing sound as trowel is moved over surface.

Consolidate concrete surface by final hand troweling operation, free of trowel marks, uniform in texture and appearance, and with surface plane tolerance not exceeding 1/8 in. in 10 ft when tested with a 10-ft straightedge.

Nonslip Broom Finish (Brm): Apply nonslip broom finish to exterior concrete platforms, steps, and ramps, and elsewhere as shown on drawings or in schedules.

Immediately after float finishing, slightly roughen concrete surface by brooming in direction perpendicular to main traffic route.

CONCRETE CURING AND PROTECTION:

General: Protect freshly placed concrete from injurious action by sun, rain, wind, flowing water, mechanical injury and premature drying for not less than seven (7) consecutive days after placement.

Protect concrete against damage from frost or freezing for a minimum of 3 days. Provisions of ACI 306.1 shall apply for cold weather unless otherwise specified.

Alternatively, if tests are made of cylinders kept near the structure and cured by the same methods, moisture retention measures may end when the average compression strength has reached 70% of the specified strength. Other alternatives such as those given in ACI 301, 12.2.3 may also be used if approved by the Contractor.

Early Loading of New Concrete: Early loading of concrete structures shall comply with requirements of ACI 318, Section 6.2. When construction loading is proposed before concrete has achieved its 28-day design strength, structural calculations and concrete strength test data shall be submitted and approved prior to loading.

Curing Methods: Perform curing of concrete by one or more of the following methods:

Moist Curing: Cover concrete surfaces with moisture-retaining cover for curing period. Exposed horizontal concrete surfaces may be covered with sand or other approved material and kept wet for the required period. Wood forms shall be kept sufficiently wet at all times to prevent the forms from separating at the joints and the concrete from drying.

Membrane Curing: Concrete surfaces to receive membrane curing shall be treated with a curing compound as specified or otherwise approved. The curing compound shall be applied in strict accordance with the directions of the manufacturer of the compound.

Temperature, Wind, and Humidity:

Cold weather: When the mean daily outdoor temperature is less than 40° F, the temperature of the concrete surface shall be maintained between 55 and 90° F for the required curing period. When necessary, arrangements for heating, covering, insulating, or housing the concrete work shall be made in advance of placement and shall be adequate to maintain the required temperature without injury due to concentration of heat. Combustion heaters shall not be used during the first 24 hrs unless precautions are taken to prevent exposure of the concrete to exhaust gases that contain carbon dioxide. If early loading is anticipated during cold weather, provide temperature protection to insure necessary strength development.

The concrete surface temperature requirements (based on section thickness) in ACI 306.1 may be used in lieu of the 55° F minimum specified before.

If concrete surface temperatures as measured by the inspecting agency are below the minimum curing temperature but meet the freeze protection requirements, the concrete curing period shall be extended to ensure adequate strength is developed. The extension time shall be at least equivalent to the time period in which temperatures were too low.

Hot weather: The concrete surfaces shall be kept below 100° F for the curing period. When necessary, provision for windbreaks, shading, fog spraying, sprinkling, ponding, or wet covering with a light colored material shall be made in advance of placement, and such protective measures shall be taken as quickly as concrete hardening and finishing operations will allow.

Rate of temperature change: Changes in temperature of the air immediately adjacent to the concrete during and immediately following the curing period shall be kept as uniform as possible and shall not exceed 5° F in any 1-hr or 50° F in any 24-hr period.

REMOVAL OF FORMS:

Formwork Not Supporting Weight of Concrete: This formwork may be removed after cumulatively curing at not less than 50° F for 32 hrs after placing concrete, provided concrete is sufficiently hard not to be damaged by form removal or subsequent operations. Curing must then continue through the minimum curing period.

Formwork Supporting Weight of Concrete: This formwork may not be removed until concrete has attained its 28-day design compressive strength, except as permitted under "Early Loading of New Concrete".

CONCRETE SURFACE REPAIRS:

All porous and fractured concrete shall be repaired. Surface defects may be repaired by patching. Surface defects include color and texture irregularities, cracks, spalls, air bubbles, honeycomb, rock pockets, fins, snap-tie holes and other projections on the surface. The Contractor shall approve all repairs. Alternate repair methods not specified may be used if approved by the Contractor.

Patch Defective Areas: Repair and patch defective areas with cement mortar immediately after removal of forms, when approved by the Contractor. Cut out honeycomb, rock pockets, and voids over 2 in. in any dimension. Thoroughly clean, dampen with water and brush-coat the area to be patched with specified bonding agent. Place patching mortar after bonding agent has dried.

Repair defects in concrete exceeding 2 in. in diameter by removing defective areas, cleaning, treating with bonding agent, and replacing with new concrete.

FIELD QUALITY CONTROL:

Subcontractor Supplied Testing: The Subcontractor shall provide the necessary testing and monitoring services for the following:

Testing services needed by the Subcontractor to control or monitor the production, transportation, placement, protection, curing or temperature of the concrete.

The use of Contractor supplied inspection or testing services shall in no way relieve the Subcontractor of the responsibility to furnish materials and construction in full compliance with the subcontract documents.

Contractor Supplied Testing: The Contractor's Representative will perform tests during placement and curing of the concrete. Monitoring of concrete protection and curing methods will also occur.

Sampling and testing for quality control during placement of concrete will include the following:

Sampling Fresh Concrete: ASTM C 172, except modified for slump to comply with ASTM C 94.
Slump: ASTM C 143.
Air Content: ASTM C 231.
Concrete Temperature: Test when air temperature is 40 F or below, or when 90° F or above, and at any other times as selected by the Contractor.

Concrete Uniformity Test for Adequacy of Mixing Equipment: ASTM C 94.

Compression Test Specimen: ASTM C 31, one set of 2 standard cylinders for each compressive strength test, unless otherwise directed.

Subsequent tests may include:

Compressive Strength Tests: ASTM C 39, frequency of testing shall comply with ACI 318, Chapter 5, Section 5.6, unless otherwise directed.

Strength level of an individual class of concrete shall be considered satisfactory if both of the following requirements are met:

Average of all sets of three (or less if three are not available) consecutive strength tests equal or exceed the specified 28-day compressive strength.

No individual strength test (average of two cylinders) falls below the specified 28-day compressive strength by more than 500 psi.

Inspection or test results not conforming to the stated requirements of this specification shall be reported to the Operating Contractor's Project Manager for evaluation and disposition with the concurrence of the Architect/Engineer.

Nondestructive Tests: Testing by impact hammer, sonoscope, or other nondestructive device may be performed to determine relative strengths at various locations in the structure as an aid in evaluating concrete strength in place or for selecting areas to be cored. Such tests, unless properly calibrated and correlated with other test data, shall not be used as a basis for acceptance or rejection of the concrete.

Surveillance will be performed by the Contractor's Representative to verify compliance of the work to the drawings and specifications.

END OF SECTION 03300

SECTION 05100--STRUCTURAL STEEL AND MISCELLANEOUS METALS

PART 1--GENERAL

SUMMARY:

The Subcontractor shall supply all labor, equipment, and materials required to construct items listed hereafter and as shown on the drawings.

Section Includes: Work includes, but is not limited to:

Structural steel framing.
Structural steel pipe supports.
Structural steel equipment supports or platforms.
Miscellaneous steel such as guard posts, anchors, and embedments.

Related Sections: The following sections contain requirements that relate to the work of this section:

Section 03300, Cast-In-Place Concrete for grouting and cast-in-place anchoring structural steel and miscellaneous metals to concrete.
Section 05026, Welding for welding on structural steel and miscellaneous metals.
Section 09900, Painting for shop painting structural steel and miscellaneous metals.
Section 13121, Portable Buildings for factory erection of structural steel framing in portable buildings.

REFERENCES:

The following documents including others referenced therein, form part of this Section to the extent designated herein.

AMERICAN INSTITUTE OF STEEL CONSTRUCTION (AISC)

AISC	Code of Standard Practice for Steel Buildings and Bridges
AISC (ASD)	Specification for Structural Steel Buildings - Allowable Stress Design (ASD) and Plastic Design

AMERICAN NATIONAL STANDARDS INSTITUTE (ANSI)

ANSI Z49.1	Safety in Welding

AMERICAN WELDING SOCIETY (AWS)

AWS D1.1	Structural Welding Code - Steel
AWS D1.3	Structural Welding Code - Sheet Steel

RESEARCH COUNCIL ON STRUCTURAL CONNECTIONS

RCSC	Specification for Structural Joints Using ASTM A325 or A490 bolts

STEEL STRUCTURES PAINTING COUNCIL (SSPC)

SSPC SP-7	Brush-off Blast Cleaning
SSPC Paint 25	Red Iron Oxide, Zinc Oxide, Raw Linseed Oil and Alkyd Primer (without Lead and Chromate Pigments)

The following specifications are referenced in regard to materials:

AMERICAN SOCIETY FOR TESTING AND MATERIALS (ASTM)

ASTM A 36	Structural Steel
ASTM A 53	Pipe, Steel, Black and Hot-Dipped, Zinc-Coated Welded and Seamless
ASTM A 307	Carbon Steel Bolts and Studs, 60000 psi Tensile Strength
ASTM A 325	High-Strength Bolts for Structural Steel Joints
ASTM A 490	Heat-Treated Steel Structural Bolts, 150 ksi Minimum Tensile Strength
ASTM A 500	Cold-Formed Welded and Seamless Carbon Steel Structural Tubing in Rounds and Shapes
ASTM A 572	High-strength, Low-alloy Columbium-Vanadium Steels of Structural Quality
ASTM A 611	Steel, Sheet, Carbon, Cold-Rolled, Structural Quality
ASTM A 653	Steel Sheet, Zinc-Coated (Galvanized) by the Hot-Dip Process, Structural (Physical) Quality
ASTM A 924	Sheet Steel, Zinc Coated (Galvanized) by the Hot Dip Process
ASTM B 209	Standard Specification for Aluminum and Aluminum Alloy Sheet and Plate

SUBMITTALS:
Welding: Welding submittals shall be in accordance with section 15025, Welding.

Submittals for review:
Shop Drawings: Submit copies of shop drawings, including all shop and erection details, members (with their connections), and templates required for coordination with work of other sections, for approval prior to fabrication release. All welds shall be indicated by standard welding symbols of AWS D1.1.

Erection: Prior to erection, submit copies of erection plans of the structural steel framing for approval. This erection plan shall conform to the requirements of AISC Code of Standard Practice. The erection plan shall describe all necessary temporary supports, including the sequence of installation and removal. Plan shall show sufficient detail and instructions to ensure the structure has been evaluated for stability throughout the contract.

Materials: Submit copies of certified copies of mill tests reports for high-strength bolts, heavy-hex nuts and flat washers for approval prior to purchase.

Procedures: Submit copies of procedures for tightening of "slip critical" bolts for approval prior to purchase. The procedure shall include necessary materials, tightening methods, and inspection methods or criteria if direct tension indicator tightening is used.

Samples: Submit 3 high-strength bolt, nut and washer assemblies from each lot supplied for examination, testing and approval by the Contractor prior to installation. The assemblies shall be a random sample selected by the Contractor's Representative.

Submittals for information: None

Submittals for project closeout: None

QUALITY CONTROL:

Qualification for Welding Work:

Off-Site: Qualify welding processes and operators for shop welding in accordance with AWS D1.1.

On-Site: Qualify welding operators for on-site (field) welding in accordance with the INEEL Welding Manual. On-site welding will be performed to WPS C3.5 or C6.10 as applicable. All welders shall be qualified at the INEEL Welder Test Facility.

DELIVERY, STORAGE AND HANDLING:

Store material to permit easy access for inspection and identification. Protect members and materials from corrosion and deterioration.

Do not store materials in a manner that might cause distortion or damage to members or supporting structures. Repair or replace damaged materials that do not meet these specifications.

PART 2--PRODUCTS

MATERIALS:

Structural Steel Shapes: ASTM A 36/A 572 Grade 50, except where other type steel is indicated.

Miscellaneous Steel Plates and Bars: ASTM A 36, except where other type steel is indicated.

Cold-Formed Steel Tubing: ASTM A 500, Grade B.

Steel Pipe: ASTM A 53, Type E or S, Grade B or ASTM A 120, Grade B.

Anchor Bolts: ASTM A 307.

Shoulder Eye Bolts: Steel, 19,600-lb. minimum working load capacity, 1.5-inch diameter shank, and 2.5-inch diameter inside dimensioned eye for welded connection. Provide Buckeye Forge Model No. 3150, as supplied by Boise's Rigging Supply, Boise, ID, TEL 208/342-8919, or approved equal.

Unfinished Threaded Fasteners: ASTM A 307, Grade A, regular hexagon type, low carbon steel.

High-Strength Threaded Fasteners: Heavy hexagon structural bolts, heavy hexagon nuts, and hardened washers, as follows:

Quenched and tempered medium-carbon steel, bolts, nuts and washers, complying with ASTM A 325 or A 490, Type 1.

Direct tension indicators shall be as made by J&M Turner Inc., or approved equal.

Concrete Anchors: Concrete anchors shall be wedge anchors as manufactured by one of the following manufacturers or approved equal:

"Red Head" by ITT Phillips Drill Company
"Hilti Kwik-Bolt II" by Hilti Inc.

Electrodes: Comply with AWS D1.1 for shop welding. Comply with INEEL Weld Procedures indicated for field welding.

Structural Steel Primer Paint: Primer shall conform to Painting Section 09900.

Compressible Seals: Closed-cell, neoprene or ethylene propylene diene terpolymer (EPDM)

strips or sheet, of size as indicated, with compatible adhesive joint sealant.

FABRICATION:

Shop Fabrication and Assembly: Fabricate items of structural steel in accordance with AISC ASD Specification.

Fabrication and assembly shall be done in the shop to the maximum extent possible.

Connections: Weld or bolt shop connections, as indicated. Bolt field connections, except where welded connections are indicated. Provide 3/4-in. diameter "slip-critical" high-strength threaded fasteners for bolted connections, except where otherwise indicated. Install high strength threaded fasteners in accordance with Specification for Structural Joints using ASTM A 325 or A 490 Bolts. Acceptable methods for tightening of "slip-critical" bolts are limited to direct tension indicator tightening, turn-of-nut tightening, installation of alternate design bolts, and calibrated wrench tightening.

Weld Construction: Comply with AWS D1.1 for procedures, appearance and quality of welds, and methods used in correcting welding work.

SHOP PAINTING:

General: Comply with requirements of Section 09900—Painting. Shop prime structural steel, except the following:

Surfaces embedded in concrete, grout, or mortar. Extend priming of partially embedded members to a depth of 2 in.
Surfaces to be field welded or to be high-strength bolted with slip-critical condition.

Surface Preparation: After inspection and before shipping, clean surfaces to be painted. Remove loose rust, loose mill scale, and splatter, slag or flux deposits. Prepare surfaces according to SSPC SP-7 "Brush-off Blast Cleaning", unless otherwise indicated in Section 09900.

Priming: Immediately after surface preparation, apply primer coats in accordance with manufacturer's instructions and Section 09900—Painting. Apply primer at rate recommended by SSPC to provide primer dry film thickness not less than 1.5 mils. Stripe paint corners, crevices, bolts, welds, and sharp edges. Apply two (2) coats of prime paint to surfaces that are inaccessible after assembly or erection; change second coat color to distinguish from first.

Portable Building Finish Painting: Shop paint finish coats on primed structural steel and miscellaneous metals for portable buildings specified in Section 13121 on exposed and semi-

exposed surfaces of embedded members. Do not paint contact surfaces of electrically bonded plate washers.

PART 3--EXECUTION

ERECTION:

Surveys: Check elevations of concrete bearing surfaces, and locations of anchor bolts and similar devices, before erection work proceeds, and report discrepancies to the Contractor. Do not proceed with erection until corrections have been made or until compensating adjustments have been agreed upon with the Contractor.

Temporary Shoring and Bracing: Provide temporary shoring and bracing members with connections of sufficient strength to bear imposed loads.

Anchor Bolts: Furnish anchor bolts and other connectors required for securing steel to foundations and other in-place work. Furnish templates and other devices as necessary for presetting bolts and anchors to accurate locations.

Tighten anchor bolts after supported members have been positioned and plumbed.

Compressible Seals: Provide continuous compressible seals required for sealing steel to foundations of portable buildings specified in Section 13121. Adhesively seal end joints in seals at miter corners and changes in elevations.

Field/ Shop Assembly: Set structural steel accurately to lines and elevations indicated. Align and adjust various members before permanently fastening. Clean surfaces that will be in contact before assembly. Perform necessary adjustments to compensate for discrepancies in elevations and alignment. Level and plumb individual members of structure within specified AISC Code of Standard Practice tolerances, except as indicated otherwise.

Field Connections: Do not use gas cutting in field for correcting fabrication errors in structural framing:

Bolted Connections: Install high strength threaded fasteners in accordance with "Specifications for Structural Joints Using ASTM A 325 or A 490 Bolts." All connections using high-strength threaded fasteners shall be considered "slip-critical" unless otherwise indicated.

Field Welding: Field welding shall be done in accordance with the AWS D1.1, the INEEL Welding Manual and applicable INEEL Welding Procedures C-2.11, C-3.5, C-6.9, or C-6.10.

FIELD QUALITY CONTROL:

Contractor Supplied Testing: The Contractor's Representative will inspect high-strength bolted connections and welded connections and perform tests and prepare test reports unless noted otherwise. The Contractor's Representative will perform visual inspection of all field welds in accordance the Section 6 of AWS D1.1 as applicable. He may also perform a visual receipt inspection of shop welds.

Contractor Inspection: Surveillance will be performed by the Contractor's Representative to verify compliance of the work to the drawing and specifications.

Subcontractor Supplied Testing:

Shop Bolted Connections: Inspect in accordance with the Specification for Structural Joints Using ASTM A325 or A490 bolts.

Shop Welding: Certify welders, inspect and test during fabrication of structural steel per AWS D1.1 and AISC ASD Specification. Record types and locations of defects and work required and performed to correct deficiencies. As a minimum visually inspect all welds according to requirements of AWS D1.1, Section 6 as applicable.

END OF SECTION 05100

SECTION 05400—LIGHT GAUGE METAL FRAMING

PART 1--GENERAL

SUMMARY:

Section Includes: Work includes, but is not limited to furnishing and installing:

Exterior non-load-bearing wall framing.
Interior non-load-bearing partition framing.
Roof joist framing.
Roof decking.

REFERENCES:

The following documents, including others referenced therein, form part of this Section to the extent designated herein:

AMERICAN SOCIETY FOR TESTING AND MATERIALS (ASTN)

ASTM A 653	Steel Sheet, Zinc-Coated (Galvanized) PR Zinc-Iron Alloy-Coated (Galvannealed)by the Hot Dip Process
ASTM C 645	Standard Specification for Non-Load (Axial) Bearing Steel Studs, Runners (Track), and Rigid Channels for Screw Application of Gypsum Board
ASTM C 955	Standard Specification for Load-Bearing (Transverse and Axial) Steel Studs, Runners (Tracks), and Bracing or Bridging for Screw Application of Gypsum Board and Metal Plaster Plaster Bases

SUBMITTALS:

Submittals for review: No Vendor Data required for this section unless an "or-equal" item is proposed. "Or-equal" items require contractor approval prior to purchase.

Submittals for information: None.

Submittals for project closeout: None

DELIVERY AND STORAGE:

Protect metal framing units from rusting and damage. Deliver to project site in manufacturer's unopened containers or bundles, fully identified with name, brand, type and grade. Store off ground in a dry ventilated space or protect with suitable waterproof coverings.

PART 2--PRODUCTS

MANUFACTURERS: Manufacturers offering products complying with requirements for light gauge metal framing components include the following:

Alabama Metal Industries
Bostwick Steel Framing Co.
Dale/Incor Industries
Dietrich Industries, Inc.
National Gypsum Co.; Gold Bond Building Products Division
Stud-Rite Steel Framing Systems
United States Gypsum Co.
United States Steel

STEEL FRAMING FOR WALLS AND PARTITIONS:

General: Provide non-load-bearing steel framing members and components with hot-dipped galvanized protective coating complying with ASTM A 653, G40.

Non-Load-Bearing Steel Studs and Runners: ASTM C 645, manufacturer's standard punched C-shaped studs with 3/16-inch minimum doubled-over flange return lip; 3.5 inch width, unless otherwise indicated; and complying with the following requirements for minimum thickness of base (uncoated) metal:

Thickness: 0.0270 inch (22 gage), unless otherwise indicated.
Thickness: 0.0329 inch (20 gage), for head runner, sill runner, jamb, and cripple studs and other openings.

ROOF JOIST FRAMING:

Steel Joists: Manufacturer's standard C-shaped steel joists, of web depth indicated, punched, with stiffened flanges, complying with ASTM C 955, and as follows:

Minimum Uncoated Steel Thickness: 0.0329 inches (20 gage).
Product: United States Gypsum Co., Models 60SJ20/ 60CR20 or 60SJ16/ 60CR16 for joists/ runners, respectively, or approved equal.

FRAMING ACCESSORIES:

General: Framing components may be prefabricated into panels prior to erection. Fabricate panels plumb, square, true to line and braced against racking. Perform lifting of prefabricated panels in a manner to prevent damage or distortion.

Components: With each type of metal framing required, provide manufacturer's standard flat strap bracing and backing plates complying with ASTM A 653 or ASTM A 568, blocking, lintels, clip angles, shoes, furring angles, reinforcements, fasteners, and accessories as recommended by manufacturer for applications indicated, as needed to provide a complete metal framing system.

Fabricate steel framing accessories of the same material and finish used for framing members, with minimum yield strength of 33,000 psi.

Fastenings: Attach similar components by screws, as standard with manufacturer.

Wire tying of framing components is not permitted.

SHEATHING MATERIALS:

Roof Sheathing: Noncombustible, UL-listed, nailable structural non-asbestos fiber-cement sheathing, 3/4-inch nominal thickness. Provide PROMATECT Roof Decking from Promat Etex Group, Div. of Eternit, Inc., Blandon, PA 19510, TEL 610-926-0100; or approved equal.

PART 3--EXECUTION

STEEL FRAMING INSTALLATION:

Manufacturer's Instructions: Install metal framing systems in accordance with manufacturer's printed or written instructions and recommendations, unless otherwise indicated.

Runner Tracks: Install continuous tracks sized to match studs. Align tracks accurately to layout at base and tops of studs. Unless indicated otherwise, secure tracks as recommended by stud manufacturer for type of construction involved, except do not exceed 24 in. o.c. spacing for nail or power-driven fasteners, nor 16 in. o.c. for other types of attachment. Provide fasteners at corners and ends of tracks.

Studs: Set studs plumb, except as needed for diagonal bracing.

Installation of Wall Stud System: Secure studs to top and bottom runner tracks by screw fastening at both inside and outside flanges.

Wall Openings: Frame wall openings larger than 2 ft-0 in. square with double stud at each jamb of frame except where more than two are either shown or indicated in manufacturer's instructions. Install runner tracks and jack studs above and below wall openings. Anchor tracks to jamb studs with stud shoes or by screws, and space jack studs same as full-height studs of wall.

Stiffeners: Install horizontal stiffeners in stud system, spaced (vertical distance) at not more than 5 ft 0 in. o.c. Attach at each intersection.

Field Painting: Touchup shop-applied protective coatings damaged during handling and installation. Use galvanizing repair paint for galvanized surfaces.

Partition Bracing: Provide diagonal bracing for the top of metal stud walls of more than 8 ft unbraced length up to closest roof purlin or joist. Use metal studs or heavy gage hat channel and two screws into the top wall runner and two screws into the roof purlin. Locate braces at not more than 6 ft 0 in. o.c. Angle between a vertical line above ceiling and brace shall not exceed 60. Coordinate with ductwork so as to cause no interferences.

ROOF SHEATHING INSTALLATION:

Manufacturer's Instructions: Install roof sheathing with fasteners to roof framing in accordance with manufacturer's written instructions and recommendations. Install panel lengths perpendicular to framing members with end joints staggered not less 24 inches from end joints on adjacent panels.

FIELD QUALITY CONTROL:

Surveillance will be performed by the Contractor's Representative to verify compliance of the work to the drawings and specifications.

END OF SECTION 05400

SECTION 07190--VAPOR BARRIERS

PART 1--GENERAL

SUMMARY:

Section Includes: Work includes, but is not limited to, vapor barriers for:

Building systems exterior wall assemblies.
Portable building exterior wall and roof assemblies.

Furnish and install vapor barriers on the innermost interior insulation face in exterior walls and roofs of buildings as indicated for the New Pump and Treat Facility Project. The vapor barrier shall be continuous over all interior surfaces and all seams and penetrations shall be sealed.

Related Sections: The following sections contain requirements that relate to the work of this section:

Section 13120, Metal Building Systems for installation of vapor barriers in metal building system.
Section 13121, Portable Buildings for factory installation of vapor barriers in portable buildings.

REFERENCES:

The following documents, including others referenced therein, form a part of this Section to the extent designated herein:

AMERICAN SOCIETY FOR TESTING AND MATERIALS (ASTM)

ASTM D 774	Standard Test Method for Bursting Strength of Paper
ASTM D 828	Standard Test Method for Tensile Properties of Paper and Paperboard Using Content-Rate of Elongation Apparatus
ASTM D 2020	Standard Test Method for Mildew (Fungus) Resistance of Paper and Paperboard
ASTM E 96	Standard Test Method for Water Vapor Transmission of Material

SUBMITTALS:

Submittals for review: No Vendor Data required for this section unless an "or-equal" item is proposed. "Or-equal" items require contractor approval prior to purchase.

Submittals for information: None.

Submittals for project closeout: None

PART 2--PRODUCTS

MATERIALS:

Vapor Barrier: The vapor barrier shall be a fiberglass scrim reinforced white polypropylene backed by flame retardant Kraft paper. The vapor barrier shall be a 2805 PSK aluminum foil, as manufactured by Lamotite, a Division of Rexham Corporation, or approved equal. A matching pressure sensitive tape shall be provided from the same company for sealing edges. The properties of the vapor barrier shall be as follows:

CONSTRUCTION

Aluminum Foil	0.0015 in.
Kraft	15 lb/ream _ 10%, White, Flame retardant
Adhesive	Flame retardant
Tri-directional fiberglass	Machine Direction (MD) 4 in.
yarn reinforcing	Cross Direction (XD) 4 in.

TYPICAL PHYSICAL PROPERTIES

Permeance (MVTR) ASTM E 96, Desiccant Method	
Perms, grains/hr-ft^2 in. Hg,	0.02
Puncture Resistance ASTM D 4833	10 minimum
Tensile Strength ASTM D 828 lb/in. Width, Avg.	40
Mullen Burst Strength ASTM D 774 P.S.I., Avg.	65
Mold and Mildew Resistance ASTM D 2020	
Mold Growth Sustenance	No growth or organisms
Humidity Resistance 30 days at 95% RH/120° F	
Corrosion or Delamination 10 minimum	None
Dimensional Stability 15 min at 200° F Percent Length Change, Max	0.25
Low Temperature Resistance 4 hr at 30° F	Remains flexible with no delamination
High Temperature Resistance 24 hr at 150° F	Remains flexible with no delamination
Weight per MSF, lb + or - 5%	21

Underwriters' Laboratories Surface Burning Characteristics Classification:

	Facing
Kraft Exposed	Foil Exposed
20	5
35	5

PART 3--EXECUTION

INSTALLATION:

Seal the vapor barrier at seams, perimeter, obstructions and penetrations, with tape recommended by manufacturer. Wall vapor barrier shall be installed as described in description of work.

The roof vapor barrier shall be installed over the top of the purlins and down under the batt insulation, continuously over the entire roof surface. Adequate slack shall be provided to allow the batt insulation to completely fill the void between the roof purlins. No penetrations for structural struts or other materials except when sealed with tape will be allowed.

FIELD QUALITY CONTROL:

Surveillance will be performed by the Contractor's Representative to verify compliance of the work to the drawings and specifications.

END OF SECTION 07190

SECTION 07200--THERMAL INSULATION

PART 1--GENERAL

SUMMARY:

Extent of insulation work is shown on drawings, by note and/or symbol. All exterior walls and roofs shall be insulated whether specifically shown or not.

Section Includes: Work includes, but is not limited to:

- Foundation insulation.
- Foundation skirting.
- Blanket-type thermal/ acoustical building insulation for light-gage framing.
- Blanket-type thermal building insulation for metal building systems.
- Roof insulation support system for metal building systems.
- Rigid wall insulation.

Related Sections: The following sections contain requirements that relate to the work of this section:

Section 13121, Portable Buildings for factory installation of thermal insulation in portable buildings.

REFERENCES:

The following documents, including others referenced therein, form a part of this Section to the extent designated herein:

AMERICAN SOCIETY FOR TESTING AND MATERIALS (ASTM)

ASTM C 553	Standard Specification for Mineral Fiber Blanket and Felt Insulation for Commercial and Industrial Applications
ASTM C 578	Standard Specification for Rigid, Cellular Polystyrene Thermal Insulation
ASTM C 665	Standard Specification for Mineral Fiber Blanket Thermal Insulation for Light Frame Construction and Manufactured Housing
ASTM C 1289	Standard Specification for Faced Rigid Cellular Polyisocyanurate Thermal Insulation Board
ASTM E 84	Standard Test method for Surface Burning Characteristics of Building Materials

SUBMITTALS:

Submittals for review:
Submit copies of product data indicating compliance with the requirements of this section for approval prior to construction start.

Submittals for information: None.

Submittals for project closeout: None

QUALITY CONTROL:

Thermal Conductivity: Thicknesses as shown are for thermal conductivity specified for each material. Provide adjusted thickness as directed for equivalent use of material having a different thermal conductivity. Where insulation is identified by "R" value, provide appropriate thickness.

DELIVERY, STORAGE AND HANDLING:

General Protection: Do not allow insulation materials to become wet, soiled, or covered with ice or snow. Comply with manufacturer's recommendations for handling, storage and protection during installation.

PART 2--PRODUCTS

MATERIALS:

Extruded-Polystyrene Board Below-Grade Insulation: ASTM C 578, Type IV, 1.60-lb/cu.ft, unless otherwise indicated; rigid, cellular polystyrene thermal insulation formed from polystyrene base resin by extrusion process using hydrochlorofluorocarbons (HCFC's) as blowing agent; with not less than 20 percent blend of postconsumer and recovered polystyrene resins; and with maximum surface burning indices for flame-spread and smoke-developed of 75 and 450, respectively when tested on unfaced core according to ASTM E 84. Subject to compliance with requirements, provide "Styrofoam SM" by Dow Chemical U.S.A., or "Foamular" by U.C. Industries, or approved equal.

Foundation Skirting: UV-light resistant, protruded glass-fiber reinforced composite rigid insulation protection sheet, flat profile without top flange, minimum 12 in. deep by 8 ft. long, with manufacturer's standard accessories for intended application, for adhesion to foundation insulation. Provide "Insul-Guard", manufactured by DFI Protruded Composites, Inc., Erlanger, KY 41018, TEL 606-282-7300; or "InsolCover", manufactured by Insolcover, Inc.,

Farmdale, OH 44417, TEL 800-624-3196: or approved equal.

Below Grade Insulation and Skirting Adhesive: Provide adhesive recommended by insulation manufacturer for intended application.

Unfaced Mineral-Fiber Blanket Insulation: Thermal/ acoustical insulation combining mineral fibers manufactured from glass, slag wool, or rock wool with thermosetting resins complying with ASTM C 665, Type I (blankets without membrane facing) or ASTM C 553; 1.0 pcf minimum density; maximum thermal conductivity k-value of 0.27 deg F x h x sq. ft/Btu at 75 deg F; manufacturer's standard friction-fit lengths and widths as required to fill cavities formed by framing and panel members.

Faced Mineral-Fiber Blanket Insulation: Thermal insulation combining mineral fibers manufactured from glass, slag wool, or rock wool with thermosetting resins complying with ASTM C 665, Type III, Class A (blankets with reflective vapor-retarder membrane facing and flame spread of 25 or less) or ASTM C 553; 1.0 pcf minimum density; maximum thermal conductivity k-value of 0.27 deg F x h x sq. ft/Btu at 75 deg F; with laminated vapor barrier membrane as specified on one face; manufacturer's standard friction-fit lengths and widths as required to fill cavities formed by framing and panel members.

Laminated Vapor Barrier for Faced Blanket Insulation: White metalized polypropylene/ scrim/ kraft membrane facing and flanges with white polypropylene on exposed insulation face. The vapor barrier membrane shall be Lamotite 2805, by Rexam Corporation or approved equal. It shall have been tested by Underwriter's Laboratories and shall possess ratings as follows:

	Flame Spread	Smoke Developed
Kraft side exposed	10	30
Polypropylene side exposed	5	25

Roof Insulation Support System: The Roof Insulation Support System shall be "Insul Basket" as manufactured by IB, Inc., P.O. Box 9807, Madison, WI 53715, Telephone 608-257-7288, or approved equal. Units shall be designed for use with "Z" shaped roof purlins. All Insul Basket members shall be painted white. The Insul Basket shall be 8 in. deep and allow 9 in. of insulation to be installed below the metal standing seam roof with slight compression of the batts.

Polyisocyanurate Board Wall Insulation: ASTM C 1289, Type I, Class 1 or 2; and complying with Federal Standard FS HH-I-1972/1, Class 1 or 2; rigid, cellular polyisocyanurate thermal insulation with core formed by using hydrochlorofluorocarbons (HCFC's) as blowing agent and faced on both sides with aluminum foil; 2.5 in. thick in standard sizes with minimum R-value of 18 per total thickness at 75 deg F; with maximum surface burning indices for flame-spread and smoke-developed of 75 and 125, respectively when tested on unfaced core

according to ASTM E 84. Subject to compliance with requirements, provide products from Celotex Inc. "Value-R"; R-Max Inc., or approved equal.

Adhesive for Bonding Insulation: Product with demonstrated capability to bond insulation securely to substrates indicated without damaging insulation and substrates. Use adhesive type recommended by manufacturer of insulation.

PART 3--EXECUTION

INSTALLATION:

General: Comply with manufacturer's instructions for particular conditions of installation in each case. If printed instructions are not available or do not apply to project conditions, consult manufacturer's technical representative for specific recommendations before proceeding with work.

Install insulation that is undamaged, dry, unsoiled, and has not been exposed at any time to ice and snow.

Extend insulation full thickness as shown over entire area to be insulated. Cut and fit tightly around obstructions, and fill voids with insulation. Remove projections that interfere with placement.

Apply single layer of insulation to produce thickness indicated, unless multiple layers are otherwise indicated or required to make up total thickness.

Perimeter Foundation Insulation: On vertical surfaces, set units in adhesive applied in accordance with manufacturer's instructions. Apply with the long dimension horizontal.

Protect below-grade insulation on vertical surfaces from damage during backfilling by applying protection board. Set in adhesive according to written instructions of insulation manufacturer

Foundation Skirting: Adhere units, including standard components, preformed corners, and accessories, to foundation insulation according to manufacturer's instructions, with long dimension horizontal and aligned with top of foundation. Extend skirting full-width full foundation perimeter, including areas abutting walks and paving. Seal exposed joints with elastomeric sealant.

Unfaced Batt/ Blanket Insulation: Install unfaced mineral-fiber blankets in cavities formed by framing members and wall panels. Use blanket widths, lengths, and thicknesses that fill cavities formed by framing members. Where more than one length is required to fill cavity, provide lengths that will produce a snug fit between ends. Place blankets in cavities formed

by framing members and wall panels to produce a friction fit between edges of insulation and adjoining framing members.

Polyisocyanurate Board Wall Insulation: Install boards full length with long dimension vertical and edges aligned over panel flanges. Fasten to wall girts and wall panel flanges with fasteners and spacings as recommended by insulation manufacturer and suitable for intended application.

Insulation/ Finish Board: On vertical surfaces, align joints over framing members and attach units with standard components, accessories, and fasteners in accordance with manufacturer's instructions for shiplap taped application. On vertical surfaces, apply with the long dimension vertical.

Roof Insulation Support System: Install complete system, using manufacturer's standard components and accessories, to allow for full insulation thickness as indicated without compact insulation material.

Roof Insulation for Metal Building System: Install 6-in. thick faced blankets in cavities formed by framing members on support system to produce friction fit between edges of insulation and adjoining framing members. Place blankets with facing down and facing flanges lapped over framing members; secure to produce airtight installation. Place unfaced second layer blankets of thickness to fill cavities over first layer with ends and edges staggered. Extend insulation layers into rake cavities as shown.

FIELD QUALITY CONTROL:

Surveillance will be performed by the Contractor's Representative to verify compliance of the work to the drawings and specifications.

END OF SECTION 07200

SECTION 07610--PREFORMED STEEL SIDING AND ROOFING

PART 1--GENERAL

SUMMARY:

The Subcontractor shall supply all plant, labor, and materials required to apply roofing and siding panels complete and in accordance with the drawings and specifications. Only qualified, skilled applicators shall be employed by the Subcontractor for this work.

Section Includes: Work includes, but is not limited to:

Exterior moisture barrier.
Horizontal siding, trim, and accessories.
Architectural standing-seam steel roofing, trim, and accessories.

Related Sections: The following sections contain requirements that relate to the work of this section:

Section 13121, Portable Buildings for factory installation of preformed steel siding and roofing on portable buildings.

REFERENCES:

The following documents, including others referenced therein, form part of this Section to the extent designated herein:

AMERICAN SOCIETY FOR TESTING AND MATERIALS (ASTM)

ASTM A 568	Standard Specification for Steel, Sheet, Carbon, and High-Strength, Low-Alloy, Hot-Rolled and Cold-Rolled, General Requirements for
ASTM A 792	Specification for Steel Sheet, 55% Aluminum-Zinc Alloy-Coated by the Hot-Dip Process
ASTM D 226	Standard Specification for Organic Felt Used in Roofing and Waterproofing
ASTM E 84	Standard Test Method for Surface Burning Characteristics of Building Materials
ASTM E 283	Standard Test Method for Determining the Rate of Air Leakage Through Exterior Windows, Curtain Walls, and Door Under Specified Pressure Differences Across the Specimen

FACTORY MUTUAL (FM)

FM	Large Scale 15 Minute Building Fire Corner Test Procedure

UNDERWRITER'S LABORATORIES (UL)

UL Wind uplift requirements

SUBMITTALS:

Submittals for review:

Product Data: Submit copies of product data indicating compliance with the requirements of this section for approval prior to construction start.

Samples: Submit copies of manufacturer's full range of color samples on steel substrate for selection and approval prior to construction start.

Warranties: Submit warranties as required under "Warranty" Article. Submit sample copies of manufacturer's warranty for approval prior to construction start.

Submittals for information:

Qualification: Submit copies of certification that the erector is approved by the panel manufacturer for information prior to construction start.

Submittals for project closeout:

Executed Warranties: Submit copies of executed warranties prior to final acceptance for approval by the Contractor's Construction Manager.

QUALITY CONTROL:

Qualifications: The erector shall be a manufacturer's approved erector or shall have at least 5 yrs experience in commercial-industrial metal siding installation.

WARRANTY:

Installer's Warranty: The Subcontractor shall warranty the roof including penetrations and flashing installed by the Subcontractor against leaking for a period of two (2) yrs. In the event of leakage during this period, the Subcontractor shall return the roof to a watertight condition at no cost to the government.

Manufacturer's Warranty: Roof and wall panel color finish shall be warranted against chalking, cracking delamination, fading, and crazing, for a period of 10 yrs.

PART 2--PRODUCTS

MATERIALS:

Sheet Steel: ASTM A 568 Grade A structural quality cold-rolled, with protective coating.

Protective Coating: ASTM A 924/ ASTM A 792, AZ50; Zincalume, or approved equal.

Fasteners: Fasteners shall be No. 14 cadmium plated or stainless steel self-tapping screws and clips (concealed). Exposed fasteners shall be of the same color as the roofing or siding, with neoprene washers, self drilling or self-tapping stainless steel fasteners.

Sealants and Caulking: Field applied caulking shall be as follows:

Approved products include:

Tremco "Dymeric"
Sika Chemical "Sikaflex 1a"
Mameco "Vulkem 116"
GE "2000"
Dow Chemical Co. "790."

Horizontal Preformed Wall Siding: Manufacturer's standard system, roll-formed sheet steel with protective coating and finish, 29 gauge minimum, 50,000 psi, with manufacturer's standard exposed fasteners; manufacturer's standard factory-applied lap sealant tape; and panel profile, color and finish, accessories, and products as follows:

Product: BHP Steel Building Products USA Inc., or approved equal.
Profile: Approved as matching BHP Steel Building Products, Mini-V-Beam; 32-in. net coverage, 1 3/8-in. rib depth spaced as 4-9/16 in. on center.
Finish: Bare protective coating, except as shown for painted finish.
Accessories: Manufacturer's standard components and profiles, including clips, fastenings, panel closures, and trim, as required for complete system, except match profiles shown for exposed trim and flashing. Shop prime accessories indicated for painted finish in accordance with Section 09900, Painting.

Preformed Architectural Standing Seam Roofing: Manufacturer's standard water-shed system, UL 90 rated, roll-formed sheet steel with protective coating and finish, 26 gauge, 50,000 psi roof system with standing seams, with concealed fasteners; manufacturer's standard factory-applied lap sealant tape; and panel profile, color and finish, accessories, and products as follows:

Product: BHP Steel Building Products USA Inc., or approved equal.
Profile: Approved as matching BHP Steel Building Products, "Skyline"; 16-in. net coverage, 1-in. rib depth spaced at 16 in. on center.
Finish: Manufacturer's standard factory-applied baked-on silicone-modified, polyester coating system consisting of epoxy primer and silicone-modified polyester-enamel color topcoat, except as shown for painted finish.
Color and Gloss: "Tahoe Blue" by BHP Steel Products USA Inc., or approved equal.
Accessories: Manufacturer's standard components and profiles, including clips, fastenings, panel closures, and trim, as required for complete system, except match profiles shown for exposed trim and flashing. Shop prime accessories indicated for painted finish in accordance with Section 09900, Painting.

UNDERLAYMENT MATERIALS:

Moisture Barrier: ASTM D 226, Type I (No. 15) asphalt-saturated organic felts, or approved equal vapor-permeable, moisture-resistant membrane, including adhesive or fasteners suitable for moisture barrier attachment to indicated substrate.

PART 3--EXECUTION

INSTALLATION:

Underlayment Installation: On portable buildings specified in Section 13121, install moisture barrier membrane over framing and sheathing. Install membrane continuously with lapped edges and ends prior to installing siding and roofing. Attach membrane to substrates using adhesive or fasteners compatible with membrane and suitable for substrates attached.

Siding and Roofing Installation: The panels shall be installed in strict accordance with the manufacturers' instructions, and shall provide a weather tight and water shedding installation. Any marred or abraded finish shall be touched up when acceptable to the Contractor. Any panels not uniform in color with the rest of the panels, damaged, or otherwise defective shall be removed and replaced with one acceptable to the Contractor.

Modular Spacing: Roof panels shall be installed on 16-in. centers with no side creep allowed. Modularity with wall and roof panels shall be maintained. Fasten roof panels through roof sheathing to roof framing.

FIELD QUALITY CONTROL:

Surveillance will be performed by the Contractor's Representative to verify compliance of the work to the drawings and specifications.

END OF SECTION 07610

SECTION 07901--JOINT SEALANTS

PART 1--GENERAL

SUMMARY:

Section Includes: Work includes, but is not limited to:

Seal exterior joints in vertical surfaces; and non traffic horizontal surfaces as indicated below:

Perimeter joints between building materials and frames of doors and windows.
Control and expansion joints in ceiling and overhead surfaces.
Other joints as indicated.

Seal exterior joints in horizontal traffic surfaces as indicated below:

Control, expansion, and isolation joints in cast-in-place concrete slabs.
Joints between different materials.
Other joints as indicated.

Seal interior joints in vertical surfaces and horizontal nontraffic surfaces as indicated below:

Control and expansion joints on exposed interior surfaces of exterior walls.
Perimeter joints of exterior openings where indicated.
Perimeter joints between interior wall surfaces and frames of interior doors and windows.
Perimeter joints of toilet fixtures.
Other joints as indicated.

Seal interior joints in horizontal traffic surfaces as indicated below:

Control and expansion joints in cast-in-place concrete slabs.
Control and expansion joints in tile flooring.
Other joints as indicated.

Related Sections: The following Sections contain requirements that relate to this Section:

Section 08800, Glass and Glazing for sealants used in glazing.
Section 09250, Gypsum Drywall for sealing concealed perimeter joints of gypsum board partitions to reduce sound transmission.
Section 09841, Acoustical Panels for sealing edge moldings at perimeter of acoustical ceilings.
Section 13121, Portable Buildings for factory installation of joint sealants in portable buildings.

SYSTEM DESCRIPTION:

Joint Sealants: Provide elastomeric joint sealants that have been produced and installed to establish and to maintain watertight and airtight continuous seals without causing staining or deterioration of joint substrates.

REFERENCES:

The following documents, including others referenced therein, form part of this Section to the extent designated herein:

AMERICAN SOCIETY FOR TESTING AND MATERIALS (ASTM)

ASTM C 719	Standard Test Method for Adhesion and Cohesion of Elastormeric Joint Sealant Under Cyclic Movement (Hockman Cycle)
ASTM C 834	Standard Specification for Latex Sealants
ASTM C 920	Standard Specification for Elastomeric Joint Sealants
ASTM C 1193	Standard Guide for Use of Joint Sealants
ASTM D 1056	Standard Specification for Flexible Cellular Materials - Sponge or Expanded Rubber
ASTM E 90	Standard Test Method for Laboratory Measurements of Airborne Sound Transmission Loss of Building Partitions and Elements

SUBMITTALS:

Submittals for review:

Product Data: Submit copies of product data from manufacturers for each joint sealant product required for approval prior to construction start.

Samples: Submit copies of samples for initial selection proposed in form of manufacturer's standard bead samples, consisting of strips of actual products showing full range of colors available, for each product exposed to view for approval prior to purchase..

Submittals for information:

Certification: Submit copies of certification by joint sealant manufacturer that sealants plus the primers and cleaners required for sealant installation comply with local regulations controlling use of volatile organic compounds. Submit certification for information only prior to construction start

Submittals for project closeout: None

QUALITY CONTROL:

Installer Qualifications: Engage an experienced Installer who has completed joint sealant applications similar in material, design, and extent to that indicated for the Project that have resulted in construction with a record of successful in-service performance.

Single Source Responsibility for Joint Sealant Materials: Obtain joint sealant materials from a single manufacturer for each different product required.

DELIVERY, STORAGE, AND HANDLING:

Deliver Materials: Deliver materials to the Project site in original unopened containers or bundles with labels indicating manufacturer, product name and designation, color, expiration period for use, pot life, curing time, and mixing instructions for multicomponent materials.

Store and Handle Materials: Store and handle materials in compliance with manufacturer's recommendations to prevent their deterioration or damage due to moisture, high or low temperatures, contaminants, or other causes.

SITE CONDITIONS:

Environmental Conditions: Do not proceed with installation of joint sealants under the following conditions:

When ambient and substrate temperature conditions are outside the limits permitted by joint sealant manufacturer or below 40° F (4.4° C).

When joint substrates are wet.

Joint Width Conditions: Do not proceed with installation of joint sealants where joint widths are less than allowed by joint sealant manufacturer for application indicated.

Joint Substrate Conditions: Do not proceed with installation of joint sealants until contaminants capable of interfering with their adhesion are removed from joint substrates.

PART 2--PRODUCTS

MATERIALS, GENERAL:

Compatibility: Provide joint sealants, joint fillers, and other related materials that are compatible with one another and with joint substrates under conditions of service and application, as demonstrated by sealant manufacturer based on testing and field experience.

Colors: Provide selections made by Architect from manufacturer's full range of standard colors for products of type indicated.

ELASTOMERIC JOINT SEALANTS:

Elastomeric Sealant Standard: Provide manufacturer's standard chemically curing elastomeric sealants that comply with ASTM C 920 and other requirements indicated on each Elastomeric Joint Sealant Data Sheet at end of this Section, including those requirements referencing ASTM C 920 classifications for Type, Grade, Class, and Uses.

Additional Movement Capability: Where additional movement capability is specified in Elastomeric Joint Sealant Data Sheet, provide products with the capability, when tested for adhesion and cohesion under maximum cyclic movement per ASTM C 719, to withstand the specified percentage change in the joint width existing at time of installation and remain in compliance with other requirements of ASTM C 920 for Uses indicated.

Available Products: Subject to compliance with requirements, elastomeric sealants that may be incorporated in the Work include, but are not limited to, the products specified in each Elastomeric Sealant Data Sheet.

TAPE SEALANTS:

Tape Sealant: Manufacturer's standard, solvent-free, butyl-based tape sealant with a solids content of 100% formulated to be nonstaining, paintable, and nonmigrating in contact with nonporous surfaces with or without reinforcement thread to prevent stretch and packaged on rolls with a release paper on one side.

Available Products: Subject to compliance with requirements, tape sealants that may be incorporated in the Work include, but are not limited to, the following:

Pecora Corp., Extru-Seal Tape
Pecora Corp., Shim-Seal Tape
Protective Treatments, Inc., PTI 606
Tremco, Inc., Tremco 440 Tape
Tremco, Inc., MBT-35

JOINT SEALANT BACKING:

General: Provide sealant backings of material and type that are compatible with joint substrates, sealants, primers and other joint fillers; and are approved for applications indicated by sealant manufacturer based on field experience and laboratory testing.

Plastic Foam Joint Filler: Preformed, compressible, resilient, nonstaining, nonwaxing, nonextruding strips of flexible plastic foam of material indicated below and of size, shape, and

density to control sealant depth and otherwise contribute to producing optimum sealant performance:

Closed-cell polyethylene foam, nonabsorbent to liquid water and gas, nonoutgassing in unruptured state.

Elastomeric Tubing Joint fillers: Neoprene, butyl, EPDM, or silicone tubing complying with ASTM D 1056, nonabsorbent to water and gas, capable of remaining resilient at temperatures down to minus 32 deg F. Provide products with low compression set and of size and shape to provide a secondary seal, to control sealant depth, and otherwise contribute to optimum sealant performance.

Bond-Breaker Tape: Polyethylene tape or other plastic tape as recommended by sealant manufacturer for preventing sealant from adhering to rigid, inflexible joint filler materials or joint surfaces at back of joint where such adhesion would result in sealant failure. Provide self-adhesive tape where applicable.

MISCELLANEOUS MATERIALS:

Primer: Material recommended by joint sealant manufacturer where required for adhesion of sealant to joint substrates indicated, as determined from preconstruction joint sealant-substrate tests and field tests.

Cleaners for Nonporous Surfaces: Chemical cleaners acceptable to manufacturers of sealants and sealant backing materials, free of oily residues or other substances capable of staining or harming in any way joint substrates and adjacent nonporous surfaces, and formulated to promote optimum adhesion of sealants with joint substrates.

Masking Tape: Nonstaining, nonabsorbent material compatible with joint sealants and surfaces adjacent to joints.

PART 3--EXECUTION

EXAMINATION:

Examining joints indicated to receive joint sealants, with Installer present, for compliance with requirements for joint configuration, installation tolerances, and other conditions affecting joint sealant performance. Do not proceed with installation of joint sealants until unsatisfactory conditions have been corrected.

PREPARATION:

Surface Cleaning of Joints: Clean out joints immediately before installing joint sealants to comply with recommendations of joint sealant manufacturer and the following requirements:

Remove all foreign material from joint substrates that could interfere with adhesion of joint sealant, including dust, paints (except for permanent, protective coatings tested and approved for sealant adhesion and compatibility by sealant manufacturer), old joint sealants, oil, grease, waterproofing, water repellents, water, surface dirt, and frost.

Clean concrete, masonry, unglazed surfaces of ceramic tile, and similar porous joint substrate surfaces by brushing, grinding, blast cleaning, mechanical abrading, or combination of these methods to produce a clean, sound substrate capable of developing optimum bond with joint sealants. Remove loose particles remaining from above cleaning operations by vacuuming or blowing out joints with oil-free compressed air.

Remove laitance and form release agents from concrete.

Clean metal, glass, porcelain enamel, glazed surfaces of ceramic tile, and other nonporous surfaces with chemical cleaners or other means that do not stain, harm substrates, or leave residues capable of interfering with adhesion of joint sealants.

Joint Priming: Prime joint substrates where indicated or where recommended by joint sealant manufacturer based on preconstruction joint sealant-substrate tests or prior experience. Apply primer to comply with joint sealant manufacturer's recommendations. Confine primers to areas of joint sealant bond; do not allow spillage or migration onto adjoining surfaces.

Masking Tape: Use masking tape where required to prevent contact of sealant with adjoining surfaces that otherwise would be permanently stained or damaged by such contact or by cleaning methods required to remove sealant smears. Remove tape immediately after tooling without disturbing joint seal.

INSTALLATION OF JOINT SEALANTS:

General: Comply with joint sealant manufacturer's printed installation instructions applicable to products and applications indicated, except where more stringent requirements apply.

Sealant Installation Standard: Comply with recommendations of ASTM C 1193 for use of joint sealants as applicable to materials, applications, and conditions indicated.

Installation of Sealant Backings: Install sealant backings to comply with the following requirements:

Install joint fillers of type indicated to provide support of sealants during application and at position required to produce the cross-sectional shapes and depths of installed sealants relative to joint widths that allow optimum sealant movement capability.

Do not leave gaps between ends of joint fillers. Do not stretch, twist, puncture, or tear joint fillers. Remove absorbent joint fillers that have become wet prior to sealant application and replace with dry material.

Install bond breaker tape between sealants where backer rods are not used between sealants and joint fillers or back of joints.

Installation of Sealants: Install sealants by proven techniques that result in sealants directly contacting and fully wetting joint substrates, completely filling recesses provided for each joint configuration, and providing uniform, cross-sectional shapes and depths relative to joint widths that allow optimum sealant movement capability. Install sealants at the same time sealant backings are installed.

Tooling of Nonsag Sealants: Immediately after sealant application and prior to time skinning or curing begins, tool sealants to form smooth, uniform beads of configuration indicated, to eliminate air pockets, and to ensure contact and adhesion of sealant with sides of joint. Remove excess sealants from surfaces adjacent to joint. Do not use tooling agents that discolor sealants or adjacent surfaces or are not approved by sealant manufacturer.

Provide concave joint configuration per Figure 5A in ASTM C 1193, unless otherwise indicated.

Installation of Preformed Foam Sealants: Install each length of sealant immediately after removing protective wrapping, taking care not to pull or stretch material, and to comply with sealant manufacturer's directions for installation methods, materials, and tools that produce seal continuity at ends, turns, and intersections of joints. For applications at low ambient temperatures where expansion of sealant requires acceleration to produce seal, apply heat to sealant in conformance with sealant manufacturer's recommendations.

PROTECTION:

Protect joint sealants during and after curing period from contact with contaminating substances or from damage resulting from construction operations or other causes so that they are without deterioration or damage at time of Substantial Completion. If, despite such protection, damage or deterioration occurs, cut out and remove damaged or deteriorated joint sealants immediately so that installations with repaired areas are indistinguishable from original work.

FIELD QUALITY CONTROL:

Surveillance will be performed by the Contractor's Representative to verify compliance of the work to the drawings and specifications.

CLEANING:

Clean off excess sealants or sealant smears adjacent to joints as work progresses by methods and with cleaning materials approved by manufacturers of joint sealants and of products in which joints occur.

END OF SECTION 07901

SECTION 08110--STEEL DOORS AND FRAMES

PART 1--GENERAL

SUMMARY:

Section Includes: Work includes, but is not limited to, furnishing and installing the following:

Exterior steel doors and frames for portable buildings.
Exterior steel doors for metal building systems.
Interior steel doors and frames.
Glass and glazing for steel doors.
Glazing frames for steel doors.
Louvers and frames for steel doors.

Related Sections: The following sections contain requirements that relate to the work of this section:

Section 08700, Door Hardware for door hardware and weather stripping.
Section 09900, Painting for field painting primed doors and frames.
Section 13120, Metal Building Systems for exterior door frames in metal building systems.
Section 13121, Portable Buildings for factory installation of doors and frames in portable buildings.

REFERENCES:

The following documents, including others referenced therein, form part of this Section to the extent designated herein:

AMERICAN NATIONAL STANDARDS INSTITUTE (ANSI)

ANSI A115	Specifications for Steel Door and Frame Preparation for Hardware
ANSI A224.1	Test Procedure and Acceptance Criteria for Prime Painted Steel Surfaces for Steel Doors and Frames
ANSI A250.4	Test Procedure and Acceptance Criteria for Physical Endurance for Steel Doors and Hardware Reinforcement
ANSI Y14.1	Drawing Size and Format

AMERICAN SOCIETY FOR TESTING AND MATERIALS (ASTM)

ASTM A 153	Zinc Coating on Iron and Steel Hardware
ASTM A 366	Steel, Carbon, Cold-Rolled, Commercial Quality

ASTM A 525	Specification for General Requirements for Steel Sheet, Zinc Coated (Galvanized) by the Hot-Dip Process ASTM A 569 Steel, Carbon, Hot-Rolled Sheet and Strip Commercial Quality
ASTM A 620	Steel Sheet, Carbon, Drawing Quality, Special Killed, Hot-Rolled
ASTM A 653	Steel Sheet, Zinc-Coated or Zinc-Iron Alloy-coated by the hot-Dip Process
ASTM A 780	Repair of Damaged and Uncoated Areas of Hot-Dip Galvanized Coatings
ASTM C 236	Steady State Thermal performance of Building Assemblies by means of a Guarded Hot Box
ASTM C 976	Thermal Performance of Building Assemblies by Means of a Calibrated Hot Box
ASTM C 1036	Standard Specification for Flat Glass
ASTM E 774	Standard Specification for the Classification of the Durability of Sealed Insulating Glass Units

CODE OF FEDERAL REGULATIONS (CFR)

16 CFR 1201	Safety Standard for Architectural Glazing Materials

DOOR AND HARDWARE INSTITUTE

DHI	Recommended Locations for Architectural Hardware for Standard Steel Doors and Frames

INSULATING GLASS CERTIFICATION COUNCIL (IGCC)

Certified Products Directory—Sealed Insulating Glass.

NATIONAL CERTIFIED TESTING LABORATORIES (NCTL)

STEEL DOOR INSTITUTE (SDI)

SDI 100	Recommended Specifications for Standard Steel Doors and Frames
SDI 105	Recommended Erection instructions for Steel Frames
SDI 107	Hardware on Steel Doors
SDI 112	Galvanized Standard Steel Doors and Frames
SDI 117	Manufacturing Tolerances Standard Steel Doors and Frames

STEEL STRUCTURES PAINTING COUNCIL (SSPC)

SSPC-PA 1	Paint Application Specification No. 1
SSPC-Paint 20	Zinc-Rich Primers
SSPC-SP 1	Solvent Cleaning
SSPC-SP 5	White Metal Blast Cleaning

SSPC-SP 8 Pickling

UNDERWRITER'S LABORATORIES (UL)

FACTORY MUTUAL (FM)

GLAZING DEFINITIONS:

Glass: "Glass" includes prime glass, processed glass and fabricated glass products.

Glazing: "Glazing" includes glass installation and materials used to install glass in steel doors.

Deterioration of Insulated Glass: Defects developed from normal use that are attributable to the manufacturing process and not to causes other than glass breakage and practices for maintaining and cleaning coated glass contrary to the manufacturer's written instructions. Defects include obstruction of vision by dust, moisture, or film on interior surfaces of glass.

GLAZING SYSTEM DESCRIPTION:

General: Provide glazing systems for steel doors that are produced, fabricated and installed to withstand normal thermal movement, wind loading and impact loading, where applicable, without failure, including glass breakage, failure of sealants or gaskets to remain watertight and airtight, deterioration of glazing materials, and any other defects in construction.

SUBMITTALS:

Submittals for review:

General: Submit copies of indicated items for final review and approval prior to construction start, unless otherwise indicated.

Product Data: Submit product data for each type of door and frame specified, including details of construction, materials, dimensions, hardware preparation, core, glass and glazing products, louvers, louver and glazing frames, thermal ratings, profiles, and finishes.

Shop Drawings: Submit black-line printed, CAD-generated shop drawings of size and drawing standard complying with ANSI Y 141.1, complete and accompanied by technical and performance data as necessary to fully illustrate fabrication and installation of door, frames, and glazing. Include details of each frame type, elevation of door design types, conditions of openings, details of construction, location and installation requirements of door and frame hardware and reinforcements, and details of joints and connections. Show anchorage and accessory items.

Door Schedule: Submit schedule of doors and frames using same reference numbers for door details and openings as those on subcontract drawings. Indicate coordination of glazing frames and stops with glass and glazing requirements.

Samples for Initial Selection: Submit manufacturer's color charts showing full range of colors available for factory-finished doors and frames.

Samples for Verification: Submit samples for each type of exposed finish required, prepared on samples not less than 3 by 5 inches of same thickness and material indicated for final unit of work.

Submittals for information: None.

Submittals for project closeout:

Glazing Certificates: Submit copies of product certificates signed by the glazing materials manufacturer's authorized representative certifying that their products comply with the requirements of these specifications. Separate certifications are not required for glazing materials bearing manufacturer's permanent labels designating type and thickness of glass, provided labels represent a quality control program of a recognized certification agency or independent testing agency acceptable to authorities having jurisdiction. Submit certificates before final acceptance for approval by the Contractor's Construction Manager.

Warranties: Submit copies of special warranties specified in this Section before final acceptance for approval by the Contractor's Construction Manager.

QUALITY CONTROL:

Provide doors and frames complying with ANSI/SDI 100 "Recommended Specifications for Standard Steel Doors and Frames" and as specified.

Single Source Responsibility: Provide glass for steel doors and frames from one source for each type of glass product where possible. Provide glazing accessories from one source for each product and installation method.

DELIVERY, STORAGE AND HANDLING:

Deliver doors and frames cardboard-wrapped or crated to provide protection during transit and job storage. Provide additional protection for factory finished doors.

Inspect doors and frames upon delivery for damage. Minor damages may be repaired provided finished items are equal in all respects to new work and acceptable to the Contractor; otherwise, remove and replace damaged items as directed.

Store doors and frames under cover, placed on minimum 4 inch high wood blocking. Avoid creating non-vented humidity shelters. If cardboard wrappers become wet, remove cartons immediately. Provide minimum 1/4 inch spaces between stacked doors.

Handle glazing materials and glass to comply with manufacturer's instructions and as needed to prevent damage to glass and glazing materials from condensation, temperature changes, direct exposure to sunlight, or other causes.

Where insulating glass units will be exposed to substantial altitude changes, comply with insulating glass fabricator's recommendations for venting and sealing to avoid hermetic seal ruptures.

SITE CONDITIONS:

Environmental Conditions: Comply with glass manufacturer's recommendations for installation temperatures. Do not install when glazing substrates are wet from rain, frost, condensation or other causes.

GLASS AND GLAZING WARRANTY:

General Warranty: Special warranties specified in this section shall not deprive the Owner of other rights the Owner may have under other provisions of the Contract Documents.

Manufacturer's Special Warranty on Glass Products Installed in Steel Doors: Written warranty agreeing to furnish replacements for glass units that deteriorate as defined in the "Definitions" article, f.o.b. the nearest shipping point to the project site, within the specified warranty period of 5 years from the date of Substantial Completion.

PART 2--PRODUCTS

MANUFACTURERS:

Available Manufacturers: Subject to compliance with requirements, manufacturers offering products that may be incorporated in the Work include, but are not limited to, the following:

Steel Doors and Frames:

AMWELD Building Products Div.
Ceco Corp.
Curries
Fenestra
Republic Builders Products Corp.
Steelcraft Mfg. Co.

Glass and Glazing:

AFG Industries
Artistic Glass Products Co.
Cardinal IG
Saint-Cobain
Falconer Glass Industries
Glasstemp, Inc.
Guardian Industries Corp.
HGP Industries
PPG Industries, Inc.
Spectrum Glass Products, Inc.
Tempglass
Viracon, Inc.
Ashai Glass Co.
Central Glass Co., Ltd.
Nippon Sheet Glass, Ltd.
Pilkington Sales, Ltd.

MATERIALS:

Hot-Rolled Steel Sheets and Strip: Commercial quality carbon steel, pickled and oiled, complying with ASTM A 569.

Cold-Rolled Steel Sheets: Commercial quality carbon steel, complying with ASTM A 366, or ASTM A 620, drawing quality, special killed.

Galvanized Steel Sheets: Zinc-coated carbon steel sheets complying with ASTM A 526, commercial quality, or ASTM A 653 commercial quality, with A60 or G60 coating designation, mill phosphatized.

Supports and Anchors: Fabricate of not less than 18 gage galvanized sheet steel.

Inserts, Bolts and Fasteners: Manufacturer's standard units, except hot-dip galvanized items to be built into exterior walls complying with ASTM A 153, Class C or D as applicable.

GLASS PRODUCTS:

Clear Tempered Float Glass: ASTM C 1036, Type I (transparent glass, flat), Quality q3 (glazing select), Class 1 (clear), Condition A (uncoated), Kind FT (fully tempered); with 1/4-in. thickness.

Clear Tempered Insulating Glass: ASTM E 774, Class CBA preassembled units consisting of organically dual-sealed lites of glass separated by dehydrated air spaces. Provide sealed lites complying with ASTM E 774, Type I (transparent glass, flat), Quality q3 (glazing select);

Class 1 (clear); Kind FT (fully tempered); Condition A (uncoated); with overall thickness and thickness of each lite of 25 and 6 mm, respectively.

Glazing Accessories: Provide glazing sealant, tapes, gaskets and other miscellaneous glazing materials that will provide units that will meet the warranty requirements.

Glazing Sealant Color: Provide black color for exposed applications.

DOORS:

Steel Doors: 1-3/4" doors, conforming to ANSI/SDI 100, with manufacturer's standard core, except provide cores in exterior doors with rigid polyutherane cores. Provide exterior doors with top and bottom edges finished flush. Provide doors of materials and ANSI/SDI 100 grades and models specified below, or as indicated on drawings and schedules.

Interior Doors: Unless otherwise indicated, Grade II, heavy duty, Model 2, seamless design, minimum 0.0478-inch- thick cold-rolled steel sheet faces.

Exterior Doors: Unless otherwise indicated, Grade III, extra heavy duty, Model 2, seamless design, minimum 0.0635-inch- thick galvanized steel sheet faces.

Glazing Frames: Door manufacturer's standard sizes and profiles, including standard preformed seals, fasteners and accessories, for types and conditions indicated.

Door Louvers: Manufacturer's standard units according to SDI 111C, including fasteners and accessories, for sizes and locations indicated. Provide louvers for interior doors with inverted V-shaped, Y-shaped, or Z-shaped blades or baffles formed of 0.0239-inch- thick cold-rolled steel sheet set into minimum 0.0359-inch- thick steel frame. Provide louvers for exterior doors with inverted V-shaped, Y-shaped, or Z-shaped rainproof blades or baffles formed of 0.0279-inch thick galvanized steel sheet set into minimum 0.0396-inch thick galvanized steel frame, and with galvanized-steel-wire insect screen set in galvanized-steel frame on interior side.

Hardware: See Section 08700, Door Hardware of these specifications.

FRAMES:

Provide metal frames for doors and other openings according to ANSI/SDI 100 and of types and styles as shown on drawings and schedules. Conceal fastenings unless otherwise indicated. Form frames from minimum 0.0478-inch- thick cold-rolled steel sheet, except as otherwise indicated. Fabricate frames with mitered or coped and continuously welded corners. Form exterior frames from 0.0635-inch thick galvanized steel sheet, except as otherwise indicated.

Door Silencers: Except on weather-stripped frames, drill stops to receive three silencers on strike jambs of single-swing frames.

FABRICATION:

Comply with ANSI/SDI 100 requirements. Fabricate with clearances not more than 1/8 inch at head and jambs, 1/4 inch at non-fire-rated, pair door meeting stiles, and not more than 3/4 inch at bottom.

Clearances: Not more than 1/8 inch at jambs and heads, except not more than 1/4 inch between non-fire-rated pairs of doors. Not more than 3/4 inch at bottom.

Tolerances: Comply with SDI 117 requirements.

Galvanized Steel Doors and Frames: Fabricate exterior doors and frames from galvanized steel sheet according to SDI 112. Close top and bottom edges of doors flush as an integral part of door construction or by addition of minimum 0.0635-inch- thick galvanized steel channels, with channel webs placed even with channel webs placed even with top and bottom edges. Seal joints in top edges of doors against water penetration.

Exposed Fasteners: Unless otherwise indicated, provide countersunk flat or oval heads for exposed screws and bolts.

Thermal-Rated (Insulating) Assemblies: At all exterior locations, provide doors fabricated as thermal-insulating door and frame assemblies and tested in accordance with ASTM C 236 or ASTM C 976 on fully operable door assemblies. Unless otherwise indicated, provide assemblies with maximum apparent U factor for thermal-rated assemblies is 0.24 BTU/hr (ft^2) $^\circ$F.

Finish Hardware Preparation: Prepare doors and frames to receive mortised and concealed finish hardware in accordance with final Finish Hardware Schedule and templates provided by hardware supplier. Comply with applicable requirements of SDI 107 and ANSI A115 series specifications for door and frame preparation for hardware.

For concealed overhead door closers, provide space, cutouts, reinforcing, and provisions for fastening in top rail of doors or head of frames, as applicable.

Reinforce doors and frames to receive surface-applied hardware. Drilling and tapping for surface-applied hardware may be done at Project site.

Locate finish hardware as shown on final shop drawings or, if not shown, in accordance with DHI's "Recommended Locations for Architectural Hardware for Standard Steel Doors and Frames."

Exterior Doors and Frames for Metal Building Systems: Except as otherwise indicated in this Section for exterior steel doors and frames, door frames in exterior walls of metal building systems are specified in Section 13120—Metal Building Systems.

Glazing Stops: Minimum 0.0359-inch- thick steel on interior doors and minimum 0.0396-inch- thick galvanized steel on exterior doors. Provide nonr-emovable stops on outside of exterior doors and on secure side of interior doors for glass and louvers in doors. Provide screw-applied, removable, glazing beads on inside of glass and louvers in doors.

GALVANIZED STEEL SHEET FINISHES:

Surface Preparation: After fabrication, clean surfaces with nonpetroleum solvent so that surfaces are free of oil, or other contaminants. After cleaning, apply a conversion coating of type suited to the organic coating applied over it. Clean welds, mechanical connections and abraded areas, and apply galvanizing repair paint specified below to comply with ASTM A 780.

Galvanizing Repair Paint: High-zinc-dust-content paint for regalvanizing welds in galvanized steel, with dry film containing not less 94 percent zinc dust by weight, and complying with SSPC-Paint 20.

Factory Priming for Field Painting: Where field painting after installation is indicated apply air-dried shop primer that is compatible with finish paint system indicated. Apply primer immediately after cleaning and pretreatment.

STEEL SHEET FINISHES:

Surface Preparation: After fabrication, solvent-clean surfaces in compliance with SSPC-SP 1 to remove dirt, oil, grease and other contaminants that could impair paint bond. Remove mill scale and rust, if present, to comply with SSPC-SP 5 (white metal blasting cleaning), or SSPC-SP 8 (pickling).

Pretreatment: Immediately after surface preparation, apply a conversion coating of a type suited to the organic coating applied over it.

Factory Priming for Field Painting: Apply shop primer that complies with ANSI A224.1 acceptance criteria, is compatible with finish paint system indicated, and has capability to provide a sound foundation for field-applied topcoats. Apply primer immediately after surface preparation and pretreatment.

PART 3--EXECUTION

EXAMINATION:

Installer must examine substrate and conditions under which steel doors and frames are to be installed and must notify Subcontractor of any conditions detrimental to proper and timely completion of work. Do not proceed with work until unsatisfactory conditions have been

corrected in a manner acceptable to Installer. Subcontractor shall be responsible for field verification of dimensions.

DOOR AND FRAME INSTALLATION:

General: Install steel doors, frames, and accessories according to Shop Drawings, manufacturer's data, and as specified.

Placing Frames: Comply with provisions of SDI 105, unless otherwise indicated. Set frames accurately in position, plumbed, aligned, and braced securely until permanent anchors are set. Place frames before constructing enclosing walls and ceilings. After wall construction is completed, remove temporary braces and spreaders, leaving surfaces smooth and undamaged.

In Metal-Stud Partitions: Install at least 3 wall anchors per jamb at hinge and strike levels. In steel-stud partitions, attach wall anchors to studs with screws.

In Metal Building Systems Walls: Except as otherwise indicated in this Section, installation of steel doors and frames in exterior walls of metal building systems are specified in Section 13120—Metal Building Systems.

Door Installation: Fit hollow metal doors accurately in frames, within clearance specified in SDI-100.

GLAZING INSTALLATION:

General: Comply with recommendations of manufacturers of glass, sealants, gaskets and other glazing materials, and of referenced glazing publications.

Glass Cleaning and Protection: Protect exterior glass from breakage immediately after installation by attaching crossed streamers to framing held away from glass. Do not apply markers to glass surface. Remove nonpermanent labels.

Protect glass from contact with contaminating substances resulting from construction operations including weld spatter. If, despite such protection, contaminating substances do come into contact with glass, remove them immediately as recommended by the glass manufacturer.

Remove and replace glass that is broken, chipped, cracked , abraded, or damaged in any way, including for natural causes, accidents and vandalism during the construction period. Damaged or broken glass shall be removed from the project site and disposed of off site.

Clean glass on both faces not more than 4 days prior to the date scheduled for completion of the project.

FIELD QUALITY CONTROL:

Surveillance will be performed by the Contractor's Representative to verify compliance of the work to the drawings and specifications.

ADJUSTING AND TOUCH UP:

Prime Coat Touch up: Immediately after erection, sand smooth any rusted or damaged areas of prime coat and apply touch up of compatible air-drying primer.

Protection Removal: Immediately prior to final inspection, remove protective plastic wrappings from prefinished doors.

Final Adjustments: Check and readjust operating finish hardware items, leaving steel doors and frames undamaged and in complete and proper operating condition.

DOOR AND FRAME CLEANING:

Clean off excess sealants or sealant smears adjacent to joints as work progresses by methods and with cleaning materials approved by manufacturers of joint sealants and of products in which joints occur.

END OF SECTION 08110

SECTION 08362--INSULATED SECTIONAL OVERHEAD DOOR

PART 1--GENERAL

SUMMARY:

Section Includes: Work includes, but is not limited to:

Sectional overhead doors.

Coordinate work closely with metal building manufacturer to assure compatibility and that all backing and framing have been provided. Furnish all necessary inserts and anchoring.

Related Sections: The following Sections contain requirements that relate to this Section:

Section 08700, Door Hardware for weatherstripping installed on insulated sectional overhead doors.

REFERENCES:

The following documents, including others referenced therein, form part of this Section to the extent designated herein:

AMERICAN NATIONAL STANDARDS INSTITUTE (ANSI)

ANSI Y14.1 Drawing Size and Format

AMERICAN SOCIETY FOR TESTING AND MATERIALS (ASTM)

ASTM C 236 Standard Test Method for Steady-State Thermal Performance of Building Assemblies by Means of a Guarded Hot Box
ASTM E 283 Standard Test Method for Determining the Rate of Air Leakage Through Exterior Windows, Curtain Walls, and Doors Under Specified Pressure Differences Across the Specimen
ASTM E 774 Standard Specification for the Classification of the Durability of Sealed Insulating Glass Units

GLAZING DEFINITIONS:

Glass: "Glass" includes prime glass, processed glass and fabricated glass products installed in overhead sectional doors.

Glazing: "Glazing" includes glass installation and materials used to install glass in overhead sectional doors.

Deterioration of Insulated Glass: Defects developed from normal use that are attributable to the manufacturing process and not to causes other than glass breakage and practices for maintaining and cleaning coated glass contrary to the manufacturer's written instructions. Defects include obstruction of vision by dust, moisture, or film on interior surfaces of glass.

GLAZING SYSTEM DESCRIPTION:

General: Provide glazing systems for overhead sectional doors that are produced, fabricated and installed to withstand normal thermal movement, wind loading and impact loading, where applicable, without failure, including glass breakage, failure of sealants or gaskets to remain watertight and airtight, deterioration of glazing materials, and any other defects in construction.

SUBMITTALS:

Submittals for review:

Product Data: Submit copies of product data, including installation instructions, and indicating compliance with the requirements of this Section for approval by the Contractor prior to construction start.

Shop Drawings: Submit copies of black-line printed, CAD-generated shop drawings of size and drawing standard complying with ANSI Y 141.1, complete and accompanied by technical and performance data as necessary to fully illustrate fabrication and installation of door, frames, and glazing. Include elevation of door design types, conditions of openings, details of construction, location and installation requirements of door and frame hardware, and details of joints and connections. Show anchorage and accessory items. Submit shop drawings for approval by the Contractor prior to construction start.

Samples for Initial Selection: Submit copies of manufacturer's color charts showing full range of colors available for factory-finished door panels for approval by the Contractor prior to purchase.

Glazing Certificates: Submit copies of product certificates signed by the glazing materials manufacturer's authorized representative certifying that their products installed in overhead sectional doors comply with the requirements of these specifications. Separate certifications are not required for glazing materials bearing manufacturer's permanent labels designating type and thickness of glass, provided labels represent a quality control program of a recognized certification agency or independent testing agency acceptable to authorities having jurisdiction. Submit glazing certificates for approval by the Contractor prior purchase.

Submittals for information: None.

Submittals for project closeout:

Warranties: Submit copies of special warranties specified in this Section for approval by the Contractor's Construction Manager before final acceptance.

QUALITY CONTROL:

Single Source Responsibility: Provide the sectional overhead door(s) as complete units produced by one manufacturer, including sections, brackets, guides, tracks, glazing, counterbalance mechanisms, hardware, operator and installation accessories, to suit openings and head room allowable.

WARRANTY:

General Warranty: Special warranties specified in this section shall not deprive the Owner of other rights the Owner may have under other provisions of the Contract Documents.

Manufacturer's Special Warranty on Glass Products for Overhead Sectional Doors: Written warranty agreeing to furnish replacements for glass units that deteriorate as defined in the "Definitions" article, f.o.b. the nearest shipping point to the project site, within the specified warranty period of 5 years from the date of Substantial Completion.

PART 2--PRODUCTS

PRODUCTS:

Overhead Sectional Doors: The door(s) shall be chain-operated and insulated to provide a minimum "R" value of 14 ("U" 0.070) for the individual panels and a minimum "R" value of 7 ("U" 0.143) for the door(s) in place when tested in accordance with ASTM C 236. The sections shall be sandwich construction steel/foam/steel with the insulation foamed in place. The section shall be galvanized sheet steel, 0.016-in. thick minimum, with ribbed or fluted face finished as specified hereinafter.

The door(s) shall be designed to withstand and operate under a 30 psf wind load and 100,000 operating cycles.

Available Manufacturers: Subject to compliance with requirements, manufacturers offering products that may be incorporated in the Work include, but are not limited to, the following:

Overhead Door Company "Thermacore 591".
Ceco/Windsor "2001".
Kinnear "Climaseal".
Wayne-Dalton "Thermospan".
Raynor TC-20.

MATERIALS:

Track Hardware: Tracks shall be 2 in. for doors up to 144 s.f. and/or 16 ft in height, and 3 in. for larger doors. Tracks shall be of galvanized steel and shall be supplied with mounting brackets, fasteners, etc., for a complete installation. Where possible, the track shall provide for high lift operation such that the door in the raised position encroaches on the interior space no more than 6 ft.

Weatherstrip: The door shall be provided with head, jamb, threshold, and joint weatherstripping which will allow a maximum of 0.19 CFM/ft^3 of door space at a pressure difference of 0.112 in. H_2O (15 MPH wind) when tested in accordance with ASTM E 283.

Rollers: Provide heavy-duty rollers, with steel ball bearings in case-hardened steel races, mounted with varying projections to suit slope of track. Extend roller shaft through both hinges where double hinges are required. Provide roller tires to suit size of track. Use casehardened steel tires for normal installations and neoprene or bronze for hazardous atmospheres.

Finishes: All sections shall be prefinished on the inside face and outside face. The outside face shall have a baked-on enamel finish. The color shall be white.

Counter Balancing Mechanism: Pull-rope manual operation by torsion-spring counterbalance mechanism, consisting of adjustable-tension, tempered-steel torsion springs mounted on a cross header tube or steel shaft. Connect to door with galvanized aircraft-type lift cables. Provide springs calibrated for 100,000 cycles minimum. Spring shall have safety cable or other device to restrain springs in case of breakage.

INSULATING GLASS AND GLAZING:

General: Provide full-panel glass and glazing units with manufacturer's standard components, including standard insulating-glass overall unit sizes and thickness, standard glass lite thicknesses, intermediate mullions, glazing frames, and accessories. Provide glass and glazing units for locations as shown, complying with requirements specified in this Article.

Insulating-Glass Units: Preassembled units consisting of sealed lites of glass separated by a dehydrated air interspace, and complying with ASTM E 774 for Class CBA units and with requirements specified in this Article.

Insulating-Glass Sealing System: Dual seal, with manufacturer's standard primary and secondary sealants, and manufacturer's standard spacer materials and construction.

Indoor/ Outdoor Lites: Type I (transparent glass, flat), Quality q3 (glazing select); Class 1 (clear); Kind FT (fully tempered); Condition A (uncoated).

Glazing Frames and Accessories: Manufacturer's standard framing materials and construction, including elastomeric gasket glazing, frames, glazing sealant, and glazing tapes.

PART 3--EXECUTION

INSTALLATION:

Install door, track, and operating equipment complete with necessary hardware, jamb and head mold stops, anchors, inserts, hanger and equipment supports in accordance with final shop drawings, manufacturer's instructions, and as specified herein. Adjust tension on the springs for the doors, such that they can be moved manually with a force of 10 lbs.

Fasten vertical track assembly to framing at not less than 24-in. o.c. Hang horizontal track from structural overhead framing with angle or channel hangars, welded and bolt-fastened in place. Provide sway bracing, diagonal bracing, and reinforcing as required for rigid installation of track and door operating equipment.

Upon completion of installation, including work by other trades, lubricate, test and adjust doors to operate easily, free from warp, twist, or distortion and fitting weathertight for entire perimeter.

FIELD QUALITY CONTROL:

Surveillance will be performed by the Contractor's Representative to verify compliance of the work to the drawings and specifications.

END OF SECTION 08360

SECTION 08700--DOOR HARDWARE

PART 1--GENERAL

SUMMARY:

This Section includes items known commercially as finish or door hardware that are required for swing, sliding, and folding doors, except special types of unique hardware specified in the same sections as the doors and door frames on which they are installed.

Section Includes: Work includes, but is not limited to furnishing and installing:

- Hinges
- Lock and latch sets
- Bolts
- Closers
- Miscellaneous door control devices
- Protection plates
- Weatherstripping for exterior doors
- Sound and smoke stripping for interior doors
- Automatic drop seals (door bottoms)
- Astragals or meeting seals on pairs of doors
- Thresholds

Related Sections: The following Sections contain requirements that relate to this Section:

Section 08110, Steel Doors and Frames for silencers integral with hollow metal frames and for door and frame reinforcements for surface-mounted hardware.
Section 13121, Portable Buildings for factory installation of door hardware in portable buildings.

Products furnished and installed by the Contractor, and are not part of the work of this Section, include:

Cylinders for locks on entrance doors.
Final interchangeable cores and keys.

REFERENCES:

The following documents, including others referenced therein, form part of this Section to the extent designated herein:

AMERICAN NATIONAL STANDARDS INSTITUTE/BUILDERS HARDWARE MANUFACTURERS ASSOCIATION (ANSI/BHMA)

ANSI/BHMA A117.1	Building and Facilities—Providing Accessibility and Usability for Handicapped People.
ANSI/BHMA A156.1	Butts and Hinges.
ANSI/BHMA A156.2	Bored and Preassembled Locks and Latches
ANSI/BHMA A156.4	Door Controls - Closer.
ANSI/BHMA A156.5	Auxiliary Locks and Associated Products.
ANSI/BHMA A156.7	Template Hinge Dimensions.
ANSI/BHMA A156.8	Door controls - Overhead Holders.
ANSI/BHMA A156.12	Interconnected Locks and Latches.
ANSI/BHMA A156.13	Mortise Locks and Latches.
ANSI/BHMA A156.15	Closer Holder Release Devices.
ANSI/BHMA A156.16	Auxiliary Hardware.
ANSI/BHMA A156.18	Materials and Finishes.

AMERICAN SOCIETY FOR TESTING AND MATERIALS (ASTM)

ASTM D 1056	Standard Specification for Flexible Cellular Materials - Sponge or Expanded Rubber.

DOOR AND HARDWARE INSTITUTE (DHI)

DHI	Recommended Locations for Builder's Hardware for Standard Steel Doors and Frames.

SUBMITTALS:

Submittals for review:

Product Data: Submit copies of product data from manufacturers for each door hardware product required for approval by the Contractor prior to purchase.

Hardware Schedule: Submit copies of proposed hardware schedule for approval by the Contractor prior to purchase with the following submittal requirements:

Final Hardware Schedule Content: Based on hardware indicated, organize schedule into "hardware sets" indicating complete designations of every item required for each door or opening. Include the following information.

Type, style, function, size, and finish of each hardware item.
Name and manufacturer of each item.
Fastenings and other pertinent information.
Location of each hardware set cross referenced to indications on Drawings both on floor plans and in door and frame schedule.
Explanation of all abbreviations, symbols, and codes contained in schedule.

Mounting locations for hardware.
Door and frame sizes and materials.

Submittals for information: None.

Submittals for project closeout: None

PRODUCT HANDLING:

Tag each item or package separately with identification related to final hardware schedule, and include basic installation instructions with each item or package.

Packaging of door hardware is responsibility of supplier. As material is received by hardware supplier from various manufacturers, sort and repackage in containers clearly marked with appropriate hardware set number to match set numbers of approved hardware schedule. Two or more identical sets may be packed in same container.

Inventory door hardware jointly with representatives of hardware supplier and hardware installer until each is satisfied that count is correct.

Deliver individually packaged door hardware items promptly to place of installation (shop or Project site).

QUALITY CONTROL:

Regulatory Requirements (Codes and Standards): Comply with provisions of the following codes and standards, unless otherwise specified herein:

Americans with Disabilities Act Accessibility Guidelines (ADAAG).

Single Source Responsibility: Obtain each type of hardware (latch and lock sets, hinges, closer, etc.) from a single manufacturer.

Supplier Qualifications: A recognized architectural door hardware supplier, with warehousing facilities in the Project's vicinity, that has a record of successful in-service performance for supplying door hardware similar in quantity, type, and quality to that indicated for this Project and that employs an experienced architectural hardware consultant (AHC) who is available to the Contractor and the Subcontractor, at reasonable times during the course of the Work, for consultation. Require supplier to meet with the Contractor to finalize keying requirements and to obtain final instructions in writing.

PART 2--PRODUCTS

MANUFACTURERS: Subject to compliance with requirements, manufacturers offering products that may be incorporated in the Work include, but are not limited to, the following:

Butts and Hinges	McKinney Products Co. Stanley Hardware, Div. Stanley Works
Cylinders and Locks	Best Lock Corp. Schlage Lock, Div. Ingersoll-Rand Door Hardware Group
Bolts	Glynn-Johnson Corp. H. B. Ives, A Harrow Company Stanley Hardware, Div. Stanley Works
Overhead Closer:	LCN, Div. Ingersoll-Rand Door Hardware Group Rixson-Firemark, Div. Yale Security Inc.
Door Control Devices:	Glynn-Johnson Corp. H. B. Ives, A Harrow Company
Kick, Mop, and Armor Plates:	Baldwin Hardware Corp. H. B. Ives, A Harrow Company
Door Stripping, Seals, Thresholds, Drop Seals, Sound Stripping and Astragals:	Pemko Manufacturing Co., Inc. Zero International, Inc.

SCHEDULED HARDWARE:

General: Requirements for design, grade, function, finish, size and other distinctive qualities of each type of door hardware is indicated in the Hardware Schedule at the end of this section. Products are identified by using hardware designation numbers as shown in the following: (Products other than those specified will be considered and approved if equal in all respects.)

Manufacturer's Product Designations: Provide either the designated product of the manufacturer indicated for each type of hardware listed or the comparable product of one of the other manufacturers that complies with requirements and is accepted by the Contractor as "or equal" to the designated product. Provide products for each type of hardware complying with referenced quality standards as specified under the Article "Quality Control" in Part 1 and requirements specified elsewhere in this Section.

Panic Hardware: Panic hardware shall have forged internal working parts and be opened under a maximum pressure of 15 pounds.

Quality Standards:

Butts and Hinges: ANSI A156.1
Locks and Lock Trim: ANSI A156.2
Door Controls--Closer: ANSI A156.4
Architectural Door Trim: ANSI A156.6
Template Hinge Dimensions: ANSI A156.7
Door Controls - Overhead Holders: ANSI A156.8
Thresholds, Kick Plates: ANSI A156.6
Material and Finishes: BHMA 1301.

MATERIALS AND FABRICATION:

Hand of Door: The drawings show the direction of swing or hand of each door leaf. Furnish each item of hardware for proper installation and operation of the door movement as shown.

Base Metals: Produce hardware units of the basic metal and forming method indicated, using the manufacturer's standard metal alloy, composition, temper and hardness. Do not furnish "optional" materials or forming methods for those indicated, except as otherwise specified. Comply with basic metal and forming method requirements of NFPA 80 and UL or Warnock Hersey or FM for hardware units on fire-rated door assemblies.

Fasteners: Provide hardware manufactured to conform to published templates, generally prepared for machine screw installation. Do not provide hardware that has been prepared for self-tapping sheet metal screws, except as specifically indicated.

Furnish screws for installation with each hardware item. Provide Phillips flat-head screws except as otherwise indicated. Finish exposed (exposed under any condition) screws to match hardware finish or, if exposed in surfaces of other work, to match finish of this other work as closely as possible including "prepared for paint" surfaces to receive painted finish. Provide concealed fasteners for hardware units that are exposed when door is closed except to the extent no standard units of type specified are available with concealed fasteners. Do not use thru-bolts for installation where bolt head or nut on opposite face is exposed in other work unless their use is the only means of reinforcing the work adequately to fasten the hardware securely. Where thru-bolts are used as a means of reinforcing the work, provide sleeves for each thru-bolt or use sex screw fasteners.

HINGES, BUTTS, AND PIVOTS:

Number of Hinges: Provide number of hinges indicated but not less than 3 hinges per door leaf for doors 90 inches or less in height and one additional hinge for each 30 inches of additional height.

LOCKS, LATCHES, AND BOLTS:

Lock Throw: Provide 5/8-inch minimum throw of latch on pairs of doors. Comply with UL requirements for throw of bolts and latch bolts on rated fire openings. Provide 3/4-inch minimum throw of latch for mortise locks. Provide 1-inch minimum throw for all dead bolts.

Interchangeable Core: Provide lock sets and cylinders compatible with Government-furnished and installed Best Universal Lock Co. Inc. 7-pin interchangeable cores and No. 1EC4 cams.

CLOSER AND DOOR CONTROL DEVICES:

Size of Units: Except as otherwise specifically indicated, comply with the manufacturer's recommendations for size of door control unit depending on size of door, exposure to weather, and anticipated frequency of use. Where parallel arms are indicated for closer, provide closer unit one size larger than recommended for use with standard arms. Provide parallel arms for all exterior overhead closers and track arms for all interior overhead closers, except as otherwise indicated. Provide extended spindle on closer as may be necessary to accommodate thickness of frame-mounted hardware.

Access-Free Manual Closer: Provide adjustable units complying with ANSI A117.1 provisions for door opening force and delayed action closing.

WEATHERSTRIPPING AND SEALS:

General: Provide continuous weatherstripping on exterior doors and smoke, light, or sound seals on interior doors where indicated or scheduled. Provide only those units where resilient or flexible seal strip is easily replaceable and readily available from stocks maintained by manufacturer.

HARDWARE FINISHES:

Provide matching finish for hardware units at each door or opening. Reduce differences in color and textures as much as commercially possible where the base metal or metal forming process is different for individual units of hardware exposed at the same door or opening. In general, match items to the manufacturer's standard finish for the latch and lock set (or push-pull units if no latch or lock sets) for color and texture.

Provide quality of finish, including thickness of plating or coating (if any), composition, hardness and other qualities complying with manufacturer's standards, but in no case less than specified for the applicable units of hardware by referenced standards.

The designations used in schedules and elsewhere to indicate hardware finishes are the industry-recognized standard commercial finishes, except as otherwise noted.

The designations used in schedules and elsewhere to indicate hardware finishes are those listed in ANSI/BHMA A156.18, "Materials and Finishes," including coordination with the traditional U.S. finishes shown by certain manufacturers for their products.

PART 3--EXECUTION

INSTALLATION:

Mount hardware units at heights indicated in following applicable publications, except as specifically indicated or required to comply with governing regulations and except as otherwise directed by the Contractor.

Steel Doors and Frames: "Recommended Locations for Builders Hardware for Standard Steel Doors and Frames" by the Door and Hardware Institute.

Install each hardware item in compliance with the manufacturer's instructions and recommendations. Wherever cutting and fitting is required to install hardware onto or into surfaces which are later to be painted or finished in another way care shall be taken to prevent scuffing. Coordinate removal, storage and reinstallation or application of surface protections with finishing work specified in the Division 9 sections. Do not install surface-mounted items until finishes have been completed on the substrate.

Set until level, plumb and true to line and location. Adjust and reinforce the attachment substrate as necessary for proper installation and operation.

Drill and counter sink units that are not factory-prepared for anchorage fasteners. Space fasteners and anchors in accordance with industry standards. Do not use thru-bolting for installing surface-mounted hardware units, except as otherwise scheduled or specified elsewhere in this Section.

Set thresholds for exterior doors in full bed of butyl-rubber or polyisobutylene mastic sealant.

Install electromagnetic holders according to manufacturer's written instructions and in coordination with Division 16 Sections for electrical requirements.

ADJUST AND CLEAN:

Adjust and check each operating item of hardware and each door, to ensure proper operation or function of every unit. Replace those that cannot be adjusted to operate freely and smoothly as intended for the application made. Clean adjacent surfaces soiled by hardware installation.

Final Adjustment: Wherever hardware installation is made more than one month prior to acceptance or occupancy of a space or area, return to the work during the week prior to acceptance or occupancy, and make final check and adjustment of all hardware items in such

space or area. Clean operating items as necessary to restore proper function and finish of hardware and doors. Adjust door control devices to compensate for final operation of heating and ventilating equipment.

FIELD QUALITY CONTROL:

Surveillance will be performed by Contractor's Representative to verify compliance of the work to the drawings and specifications.

HARDWARE SCHEDULE:

Group No. 1: Exterior Flush Single Door

Butts:	1 1/2 pair Mckinney T4A3386 4.5 x 4.5 x BHMA 630.
Lockset:	1 Best 84K-7-C-15D-S3 x BHMA 626.
Closer:	1 LCN P4041 x BHMA 673.
Weatherstripping:	1 set Pemko 319CN x S88 x BHMA 628.
Kickplate:	1 12 x 34 x 1/16 in. x beveled edge x BHMA 630.
Door Bottom:	1 Pemko 430CRL x BHMA 628.
Threshold:	1 Pemko 254X4AFG x BHMA 628.

Group No. 2: Exterior Flush Pair Door

Butts:	3 pair Mckinney T4A3386 4.5 x 4.5 x BHMA 630.
Lockset:	1 Best 84K-7-C-15D-S3 x BHMA 626.
Bolt:	1 set Glynn-Johnson FB9/FB10 x DP1 x BHMA 630.
Closer:	1 LCN P4041 x BHMA 673.
Astragal:	1 set Pemko 354CM x BHMA 628.
Kickplate:	2 12 x 34 x 1/16 in. x beveled edge x BHMA 630.
Weatherstripping:	1 set Pemko 319CN X S88 x BHMA 628.
Door Bottom:	2 Pemko 430CRL x BHMA 628.
Holders:	2 Glynn-Johnson 45
Threshold:	1 Pemko 254X4AFG x BHMA 628.

Group No. 3: Interior Non-Rated Single Door

Butts:	1 1/2 pair Mckinney T4A3386 4.5 x 4.5 x BHMA 626.
Lockset:	1 Best 84K-0-N-15D-S3 x BHMA 626.
Silencers:	5 Glynn-Johnson 64.
Kickplate:	2 12 x 34 x 1/16 in. x beveled edge x BHMA 630.
Wall Stop:	1 Glynn-Johnson 50C x BHMA 628.

END OF SECTION 08700

SECTION 09250--GYPSUM DRYWALL

PART 1--GENERAL

SUMMARY:

Subcontractor shall provide all material, labor, and equipment to install gypsum wallboard including all trim, accessories, and taping, complete and ready for painting.

Section Includes: Work includes, but is not limited to:

Gypsum wall board on interior partitions.
Interior insulation/ finish board on walls and ceilings.
Resilient wall base.

Related Sections: The following sections contain requirements that relate to the work of this section:

Section 13121, Portable Buildings for factory installation of finish boards in portable buildings.

REFERENCES:

The following documents, including others referenced therein, from part of this Section to the extent designated herein:

AMERICAN SOCIETY FOR TESTING AND MATERIALS (ASTM)

ASTM C 36	Specification for Gypsum Wallboard
ASTM C 475	Specification for Joint Treatment Materials for Gypsum Wallboard Construction
ASTM C 630	Specification for Water-Resistant Gypsum Backing Board
ASTM C 840	Specification for Application and Finishing of Gypsum Board
ASTM C 1002	Specification for Steel Drill Screws for Application of Gypsum Board.

SUBMITTALS:

Submittals for review: No Vendor Data required for this section unless an "or-equal" item is proposed. "Or-equal" items require contractor approval prior to purchase.

Submittals for information: None.

Submittals for project closeout: None

QUALITY CONTROL:

Single Source Responsibility: Obtain gypsum board products from a single manufacturer, or from manufacturers recommended by the prime manufacturer of gypsum boards.

DELIVERY, STORAGE AND HANDLING:

Deliver gypsum drywall materials in sealed containers or bundles identified with manufacturer, name, brand, type and grade. Store in a dry, well ventilated space protected from weather, undercover and off the ground or floor.

Environmental Conditions:

Temperature shall be 55 deg F minimum day and night during entire joint operation and until building is occupied

Provide ventilation to eliminate excessive moisture

Avoid hot air drafts which will cause too rapid drying.

PART 2--PRODUCTS

GYPSUM WALLBOARD MATERIALS:

Gypsum Wallboard: ASTM C 36, 5/8-in. thick, gypsum wallboard with tapered edges.

Screws: Screws for attachment of gypsum board shall be Type S for light gage steel framing (22 gage or lighter), Type S-12 for heavy gage steel framing (20 to 12 gage).

Structural Accessories: Galvanized steel, 25-gage minimum, 2.5-in. by 2.5-in. furring angles and Z-furring channels, and roll-formed, hat-shaped channels, as required and shown for complete system installation; United States Gypsum Co., or approved equals.

Tape and Cement: Tape and cement for finishing the joints shall be of material specifically manufactured for that purpose and shall be United States Gypsum Co., "Perf-A-Tape", or approved equal.

Metal Trim: Steel edge trim and corner reinforcement shall be United States Gypsum Co., "200-B" and "Dur-A-Bead," respectively, or approved equals.

INSULATION/ FINISH BOARD:

General: Composite finish board system, composed of glass-fiber reinforced polyisocyanurate rigid insulation board core with laminated aluminum sheet face and and back surfaces. Face sheets shall be finished with manufacturer's standard baked-on enamel coating system.

Finish Wallboards: 1/2- nominal thickness; 16.5 mil white embossed, acrylic-coated aluminum sheet laminated to 1.0 mil plain aluminum sheet on exposed side and 1.0 mil plain aluminum sheet on back side. Celotex Corp., "Thermax Heavy Duty Plus", or approved equal.

Finish Ceiling Boards: 1/2- nominal thickness; 1.25 mil white embossed, acrylic-coated aluminum sheet on exposed side and 1.25 mil plain aluminum sheet on backside. Celotex Corp., "Thermax Light Duty", or approved equal.

Accessories: Manufacturer's standard components for shiplap joint application.

RESILIENT WALL BASE:

Base: 4-in. wide straight rubber base work molded corners and accessories; Roppe Corp. , Color No. 99, "Bone", or approved equal.

Adhesive: In accordance with base manufacturer's recommendation for application intended.

PART 3--EXECUTION

GYPSUM WALL BOARD INSTALLATION:

Framing: The Subcontractor shall check the alignment of framing members and make necessary adjustments before proceeding with installation of the wallboard. Wall and ceiling framing shall be spaced 16 in. on center unless shown otherwise. Framing members shall be straight and in alignment, and headers shall be installed for solid support of fixture attachments, wherever necessary. Blocking shall be installed behind all wallboard edges and joints.

Wallboard: Cut and fit gypsum accurately, in the longest lengths possible, with long edges parallel or perpendicular to main framing. Joints on opposite sides of partitions shall not fall on the same stud. All field cut and rough edges shall be sanded smooth and straight. All joints shall be firmly butted together without damaging the edges of the wallboard. Screw wallboard securely to supports, spacing the fasteners not less than 3/8 in. nor more than 5/8 in. from edges and ends of the boards, 10in. to 12 in. o.c. Adjust power screwdriver to set heads in 1/32-in. dimple. Do not break face paper. If face is accidentally broken, apply second screw 2 in. away. Screws on adjacent ends or edges should be opposite each other. The boards shall be fastened at all intermediate studs, joists and blocking using the same spacing as that around edges. Steel corner-reinforcement shall be installed on all outside corners.

Texturing: All gypsum board walls shall be provided with a light-textured surface using commercially available ready-to-use texturing products or by mixing joint compound with water to a thick paint consistency. Texture shall be applied with a roller, or other approved method.

INSULATION/ FINISH BOARD INSTALLATION:

General: Comply with manufacturer's written instructions and recommendations for application and location as shown.

WALL BASE INSTALLATION:

General: Comply with manufacturer's written instructions and recommendations for application and location as shown.

PROTECTION OF WORK:

Subcontractor shall protect gypsum drywall work from damage and deterioration during the entire construction period.

No taping or texturing shall be done when temperature is below the manufacturer's recommended application temperature and in no case shall the temperature be below 40 deg F for 24 hr following application.

FIELD QUALITY CONTROL:

Surveillance will be performed by the Contractor's Representative to verify compliance of the work to the drawings and specifications.

END OF SECTION 09250

SECTION 09610—SPRAY-APPLIED LIQUID-TIGHT FLOOR COATING

PART 1--GENERAL

SUMMARY:

Section Includes: Work includes, but is not limited to, surface preparation and field coating of the following surfaces, and as indicated on finish schedule:

Exposed interior concrete floors and curbs.
Exposed concrete attachments, including installed steel base plates and anchors.

SYSTEM DESCRIPTION:

Provide spray-applied coating system, including, but not limited to, surface preparation, high-performance flexible primer/sealer, and high-performance flexible enamel finish coats, without seams or joints, on new interior concrete spill-containment floors and curbs. Provide coating system designed to maintain liquid-tight finish membrane under hydrostatic water pressure and designed to span non-structural, hairline shrinkage cracks in concrete surfaces without leaking.

REFERENCES:

The following documents, including others reference therein, form part of this specification to the extent designated therein:

AMERICAN SOCIETY FOR TESTING AND MATERIALS (ASTM)

ASTM E 84 Standard Test Method for Surface Burning Characteristics of Building Materials

NATIONAL FIRE PROTECTION ASSOCIATION (NFPA)

NFPA 101 Life Safety Code

SUBMITTALS:

Submittals for review:
Or-equal items - Submit product data of "or-equal" items for review and approval by Contractor prior to purchase.
Material Safety Data Sheets (MSDS) - Submit copies of MSDS for each product used for review and approval by the Contractor prior to construction start.
Color samples- Submit chips of available color samples for color selection by the Contractor's representative prior to purchase by the subcontractor.

Submittals for information:

Safety Precautions - Submit copies of written safety precautions for each coating product for information.
Product Data - Submit product data for each coating system specified indicating conformance to the requirements of these specifications, including surface preparation, inclusive list of required coating materials and finish system, manufacturer's technical label information, and application instructions for handling, storing, and applying coating material proposed for use.

Submittals for project closeout: None

QUALITY CONTROL:

Regulatory Requirements (Codes and Standards): Comply with provisions of the following codes and standards, unless otherwise specified herein:

NFPA 101 for flame spread requirements as determined by ASTM E 84.

Single Source Responsibility: The coating system, including sealers, patch compound, primer, and finish shall be the product of one manufacturer and/or as recommended by the manufacturer for compatibility.

Applicator Qualifications: Engage an experienced applicator who is regularly engaged in the application and installation of, and has successfully completed, coating system applications similar in material and extent to those in this project.

DELIVERY, STORAGE AND HANDLING:

Delivery and Handling: The Subcontractor shall deliver all materials to the job site in original, new and unopened packages and containers bearing the manufacturer's name and label, and the following information:

Name of material
Manufacturer's stock number, lot or batch number and date of manufacture

Contents by volume for major vehicle constituents
Thinning instructions
Application instructions
Color name and number and shelf life.

Storage: All coating materials shall be stored in an enclosed room or area with adequate ventilation. The room or area shall be maintained at a minimum temperature of 70 deg F to facilitate mixing and application procedures. Each type of paint material shall be stored in a separate area within the room or space. All containers shall be kept closed until ready for mixing. Precautionary measures shall be taken not to damage the containers, labels, and tags.

Disposal: As directed by Special Conditions.

SAFETY PRECAUTIONS:

Safety precautions shall be observed at the time of coating application. Applications and mixing of paint materials made in open air and where ventilation is not limited shall have sufficient precautions to prohibit smoking, sparks, and open flames within a radius of 50 ft. During the application of liquid-tight coatings, necessary precautions shall include proper ventilation, special fire precautions, measurements for control of solvent vapor concentrations, and use of Personal Protective Equipment (PPE) indicated on submitted MSDS for each product installed. Written permission must be obtained from the Contractor before work commences. Manufacturer's written safety precautions shall be submitted and complied with by the Subcontractor.

PART 2--PRODUCTS

COATING MATERIALS:

General: Subject to compliance with requirements and system description, provide manufacturer's standard high-solids epoxy-based high-performance floor coating system, including sealers, patch compound, primer and finish, for intended application. Coating system products shall be the product of one manufacturer as recommended by the manufacturer for compatibility with system description.

Verify that the material is within the manufacturer's specified shelf life.

No product used shall contain any lead or known or suspected carcinogen. This information is given on the Material Safety Data Sheet. In the following list of suggested products of application systems, none of the products are currently known or suspected of containing carcinogens. If at the time of vendor data submittal it has been determined that any of these products contain a known or suspected carcinogen, provide alternative substitute products, as recommended by product manufacturer for intended application and complying with requirements, and as approved by the Contractor.

Colors: Provide color selections made by the Contractor's Architect/Engineer from manufacturer's full range of standard colors.

Available Products: Subject to compliance with requirements, products that may be incorporated into the Work include, but are not limited to, products listed in the coating schedule.

COATING SCHEDULE:

Concrete:

Primer/ Sealer: One coat of manufacturer's recommended dry film thickness.
Keeler and Long No. 8301 SEAL-POX, Epoxy/ Amido-amine.

Finish Coat: Two coats of manufacturer's recommended thickness.
Keeler and Long No. 8400

Carbon Steel:

Primer/ Sealer: One coat of manufacturer's recommended dry film thickness.
Keeler and Long No. 8301 SEAL-POX, Epoxy/ Amido-amine.

Finish Coat: Two coats of manufacturer's recommended thickness.
Keeler and Long No. 8400

PART 3--EXECUTION

INSTALLATION:

Surface Preparation: Surfaces to be painted shall be sandblasted cleaned, or at option of coating manufacturer as recommended by the coating manufacturer to remove dirt, oil, grease, rust or other contaminants. Surfaces shall then be prepared in strict accordance with the coating manufacturer's instructions for optimum performance. Surface preparation for concrete shall be made before equipment and piping is installed in the rooms to be coated. The manufacturer's written procedures for surface preparation shall be submitted by the Subcontractor.

Coating Application: No coating material shall be applied unless the temperature and humidity of the air and substrate are within the ranges of those recommended by the paint manufacturer (but in no case less than 50° F or 5° above the dew point, whichever is higher). No coating material shall be applied inside a building when the temperature is less than 50° F.

Spray-apply coatings in strict accordance with coating manufacturer's written instructions. Apply each coating wet film thickness (WFT) as recommended by the paint manufacturer to achieve the specified dry film thickness (DFT).

WORKMANSHIP:

The finished work shall be free from foreign material, runs, drops, ridges, waves, laps, brush marks, sags, and holidays, and variations in hiding texture and finish. All coats shall be applied so as to produce a uniform film of the specified thickness.

PROTECTION AND CLEANUP:

Protection: Sufficient drop cloths, shields and other protective equipment shall be used to prevent sprays, cleaning solutions, or paint from fouling surfaces not being cleaned and painted. "Wet Paint" signs shall be provided and placed by the Subcontractor.

Cleanup: During the progress of the work, remove from the site all discarded coating materials, rubbish, cans, and rags at the end of each work day and clean all coating equipment, brushes, sprayers, and related materials at the end of each days' work.

Upon completion of special coating work, the Subcontractor shall clean window glass and other special-coating-spattered surfaces; and remove special coating spatters by proper methods of washing and scraping, using care not to scratch or otherwise damage finish surfaces. The Subcontractor shall not use cleaners containing chlorides on stainless steel.

At the completion of work, the Subcontractor shall touch-up, restore, and/or recoat surfaces of unacceptable work, as recommended by coating manufacturer.

FIELD QUALITY CONTROL:

Surveillance will be performed by the Contractor's Representative to verify compliance of the work to the drawings and specifications.

END OF SECTION 09610

SECTION 09841—ACOUSTICAL WALL AND CEILING PANELS

PART 1--GENERAL

SUMMARY:

Subcontractor shall provide all material, labor, and equipment to install acoustical wall and ceiling panels including all trim, accessories, and fastenings.

Section Includes: Work includes, but is not limited to:

Acoustical wall and ceiling paneling.

SUBMITTALS:

Submittals for review:
Or-equal items: Submit product data for "or-equal" items for approval by the contractor's representative prior to purchase by the subcontractor.

Submittals for information:
Product Data: Submit copies of product data for each type of acoustical panel product and accessory for information.

Submittals for project closeout: None

QUALITY CONTROL:

Single Source Responsibility: Obtain acoustical wall and ceiling panels products from a single manufacturer, or from manufacturers recommended by the prime manufacturer of acoustical wall and ceiling panels.

DELIVERY, STORAGE AND HANDLING:

Deliver acoustical wall and ceiling panel materials in sealed containers or bundles identified with manufacturer, name, brand, type and grade. Store in a dry, well ventilated space protected from weather, undercover and off the ground or floor.

PART 2--PRODUCTS

MATERIALS:

Panels: ASTM E 1264, Type XIV, Pattern L, Class A; NRC .45 minimum; 2-in. nominal thickness, composite self-furring, spun glass-fiber acoustical boards, 24-in. wide by minimum 5-ft. length with factory-finished coating and beveled edges, and glass-fiber acoustical batt insulation back.

manufacturer's standard fastening system. Provide Tectum Inc., TF Wall System with D20 mounting system, or approved equal.

Screws: Screws for attachment of acoustical wall and ceiling panels shall be Type S for light gage steel framing (22 gage or lighter), Type S-12 for heavy gage steel framing (20 to 12 gage).

PART 3--EXECUTION

INSTALLATION:

Framing: The Subcontractor shall check the alignment of framing members and make necessary adjustments before proceeding with installation of the wallboard. Wall and ceiling framing shall be spaced 16 in. on center unless shown otherwise. Framing members shall be straight and in alignment, and headers shall be installed for solid support of fixture attachments, wherever necessary. Blocking shall be installed behind all acoustical wall and ceiling panel edges and joints.

Wallboard: Cut and fit acoustical wall and ceiling panels accurately, in the longest lengths possible, with long edges parallel or perpendicular to main framing. All field cut and rough edges shall be trimmed smooth and straight. All joints shall be firmly butted together without damaging the edges of the wallboard. Screw wallboard securely to supports, spacing the fasteners not less than 3/8 in. nor more than 5/8 in. from edges and ends of the boards, 10in. to 12 in. o.c. Adjust power screwdriver to set heads in 1/32-in. dimple. Do not break face paper. If face is accidentally broken, apply second screw 2 in. away. Screws on adjacent ends or edges should be opposite each other. The boards shall be fastened at all intermediate studs, joists and blocking using the same spacing as that around edges. Steel corner-reinforcement shall be installed on all outside corners.

FIELD QUALITY CONTROL:

Surveillance will be performed by the Contractor's Representative to verify compliance of the work to the drawings and specifications.

END OF SECTION 09841

SECTION 09900--PAINTING

PART 1--GENERAL

SUMMARY:

Section Includes: Work includes, but is not limited to, surface preparation and field or shop painting of the following:

Exposed exterior items and surfaces.
Exposed interior items and surfaces.
Surface preparation, priming, and finish coats specified in this Section in addition to shop priming and surface treatment specified in other Sections.

Related Sections: The following sections contain requirements that relate to the work of this section:

Section 05100, Structural Steel and Miscellaneous Metals.
Section 13120, Metal Building Systems.
Section 13121, Portable Buildings.

Pre-finished Items: Unless otherwise indicated, do not include field painting when factory-finishing is specified for such items as (but not limited to) pre-finished partition systems, acoustic materials and casework, finished mechanical and electrical equipment including light fixtures, switchgear and distribution cabinets, equipment and cast iron gratings.

Metal surfaces of anodized aluminum, chromium plate, copper, bronze, stainless steel and similar finished materials will not require finish painting, unless otherwise indicated.

Metal Fire Rating Labels: Do not paint over any code-required labels, such as Underwriters' Laboratories and Factory Mutual, or any equipment identification, performance rating, name, or nomenclature plates.

SUBMITTALS:

Submittals for review:
Product Data: Submit copies of manufacturer's technical information, including paint label analysis and application instructions for each material Section for approval by the Contractor's representative prior to purchase.

Material Safety Data Sheets (MSDS): : Submit copies of MSDSs on all products used for approval by the Contractor's representative prior to construction start.

Samples: Submit copies of manufacturer's full range of color chips for selection by the Contractor's representative. If a non-standard color is required to match an existing color, submit three paint samples on 12-in. square hardboard for approval by by the Contractor's representative prior to

purchase.

Submittals for information: None

Submittals for project closeout: None

QUALITY CONTROL:

Applicator Qualifications: Engage an experienced applicator who is regularly engaged in the application and installation of, and has successfully completed, coating system applications similar in material and extent to those in this project.

Single Source Responsibility: Provide primers and undercoat material produced by the same manufacturer as the finish coats and as recommended for the particular substrate and finish coat.

DELIVERY, STORAGE, AND HANDLING:

General: Deliver materials to the job site in the manufacturer's original, new, unopened packages and containers bearing the manufacturer's name and label, and the following information:

- Name or title of material
- Product description (generic classification or binder type)
- Manufacturer's name, stock number and date of manufacture
- Contents by volume, for major pigment and vehicle constituents
- Thinning instructions
- Application instructions
- Color name and number
- Handling instructions and precautions

Storage: Store materials not used in tightly covered containers in a well ventilated area at a minimum ambient temperature of 45 deg F. Maintain containers used in storage in a clean condition, free of foreign materials and residue. Volatile liquids and used wiping and cleaning rags shall be kept in tightly closed metal containers. After each day's work, empty paint cans and other waste shall be removed from the premises and disposed of as directed by the Contractor. Only one day's supply of paint may be brought into the work area. Any extra must be removed from the work area at the end of each day unless otherwise approved by the Contractor. The Subcontractor shall store and handle all paint in a well ventilated area or room.

PART 2--PRODUCTS

MANUFACTURERS:

Subject to compliance with requirements, provide products of one of the following:

Benjamin-Moore

Columbia Paint Company
Devoe and Raynolds Company (ICI)
Fuller-O'Brien (ICI)
The Glidden Company (ICI)
ICI Dulux (ICI)
Ponderosa Paint Company
Pratt and Lambert
Sherwin-Williams Company

MATERIALS:

Paint shall be well ground, shall not settle excessively, cake or thicken in the container; shall be readily broken up with paddle to a smooth consistency and shall show easy brushing properties. Products containing lead or known carcinogens shall not be used. All products used shall comply with VOC requirements.

Solids by volume for latex based coatings shall be not less than 30%. Solids by volume for alkyd based coatings shall not be less than 40%. Solids by volume for wood stains and transparent finishes shall be not less than 20%.

PAINT SCHEDULE (EXTERIOR):

Ferrous Metal:

Deep-Color, Full-Gloss, Alkyd-Enamel Finish:
Primer: Rust inhibitive metal primer.
First and Second Coats: Full-gloss, exterior, alkyd enamel.
Finish Color: As shown.

Galvanized Metal:

Full-Gloss, Silicone-Modified Alkyd-Enamel Finish:
Primer: Galvanized metal primer.
First and Second Coats: Full-gloss, exterior, silicone-modified alkyd-enamel.
Finish Color: As shown.

PAINT SCHEDULE (INTERIOR):

Plywood:

Semi-Gloss Acrylic Finish:
Primer: Exterior, acrylic-latex primer.
First and Second Coats: Semi-gloss, exterior, acrylic-latex paint.
Finish Color: No. SW1683.

Ferrous Metal:

Full-Gloss, Acrylic-Enamel Finish:
Primer: Quick-drying, rust inhibitive, alkyd-based or epoxy-metal primer,
First and Second Coats: Full-gloss, interior, acrylic-latex enamel.
Finish Color: No. SW1811.

Galvanized Metal:

Full-Gloss, Acrylic-Enamel Finish:
Primer: Galvanized metal primer.
First and Second Coats: Full-gloss, acrylic-latex interior enamel.
Finish Color: No. SW1811.

Gypsum Board:

Semi-Gloss, Acrylic-Enamel Finish:
Primer: Latex-based, interior primer.
First and Second Coats: Semigloss, acrylic-latex, interior enamel.
Finish Color: No. SW1683.

Colors: Colors, except as specified hereinafter, shall be approved by the Contractor's Architect/ Engineer from full range of current color charts or chips submitted by the Subcontractor and shall match color chart names/ numbers from Sherwin-Williams Co. as indicated. Color charts or chips shall be made by the manufacturer of the paint or labels to be used on the work covered herein. If the same colors required are not available in ready mixed paint, the Subcontractor shall prepare special mixes and submit samples of such mixes to the Contractor for approval.

PART 3--EXECUTION

APPLICATION AND WORKMANSHIP:

General: No paint shall be thinned or otherwise altered in any manner other than recommended by the paint manufacturer. All paint shall be applied in strict accordance with the manufacturer's instructions, unless specified otherwise herein.

Number of Coats:

New Work: One coat of primer and two coats of finish paint except as noted otherwise on the drawings or in these specifications.

Existing Work: Two coats of finish paint.

Paint Film Thickness: Dry film thickness of paint films above substrate or existing paint surface shall be as recommended by the paint manufacturer for each coat. However, the accumulated dry film

thickness above substrate or existing paint surface shall not be less than 2.5 mils. Dry film thickness on non-magnetic surfaces shall be determined by a wet film gauge. Dry film thickness is the wet film thickness multiplied by the percent of solids by volume of the paint.

Surface Preparation: All surfaces to be painted shall be clean, smooth, dry and free of corrosion. The Subcontractor shall follow the paint manufacturer's recommendations for surface preparation strictly for the particular substrate being painted and shall submit copies of the surface preparation instructions as called for on the Vendor Data Schedule. All hardware, fixtures, fixture plate and similar factory finished items shall be removed or covered in an approved manner before painting is begun. All items shall be replaced and/or uncovered when the painting work is complete. Masonry and concrete surfaces shall be free of mortar splatters, caulking or other foreign matter. Welds that are not prime coated shall be cleaned by wire brushing.

Damaged Prime Coat or Factory Finish: Damaged shop prime or factory finish coats of paint of any material, fabricated steel or equipment to be installed shall be repaired by the Subcontractor. Chipped or scratched areas shall be sanded or wire brushed to bare metal, feathered and spot primed before finish paint is applied. All prime coats on structural steel and miscellaneous metals that have been damaged, or affected by welding during erection, shall be brushed, cleaned and painted with a prime coat after erection, except that painted concealed surfaces shall be painted before erection. The paint for repair of finish painting shall be the same color as the factory finish coat.

Protection: During painting operations, all equipment and materials, flange faces and other machined or finished surfaces, floors, furniture, plumbing and electrical fixtures and construction work, including window and door glass, that is not to be painted, or is factory finished, shall be protected from paint splatter with drop cloths, paper, masking tape or other approved means. Painted surfaces on existing work, not to be painted under this Subcontract, that are damaged as a result of the Subcontractor's operations shall be repaired by the Subcontractor by priming the touch-up as required to match the undamaged surfaces. Remove all oily rags and waste from the building each night. Take every precaution to avoid danger of fire.

Application: Paint shall be applied in such manner as to preclude runs, sagging, brush marks, holidays or other defects in the finished surface. (No spray painting will be allowed within buildings.) Each coat of paint shall have a slightly different shade of color so that each coat will be distinguishable from the preceding coat. No painting shall be done when the ambient temperature is less than 50 deg F or when the temperature during the drying period is apt to drop below 50 deg F. In areas of fresh painted surfaces where the temperature has dropped below 45 deg F during the drying period, the area shall be brought back to or above 45 deg F and the drying period extended to 48 hours. All paint shall, otherwise, be applied in strict accordance with the paint manufacturer's directions, including use of respirators where required by the manufacturer's instructions.

Cleanup: Upon the completion of the work, the Subcontractor shall remove all surplus materials and rubbish and remove all paint spots from hardware, equipment, floors, glass and walls, etc. He shall remove all excess materials and equipment from the premises and leave the area in a clean and orderly condition.

COLOR SCHEDULE:

General: Colors and gloss as scheduled are standard model numbers and colors from Sherwin-Williams Co. full range of colors, except as otherwise indicated. Provide colors and gloss from manufacturer's full range of colors approved by the Contractor's Architect/Engineer as matching scheduled colors.

Color Schedule:

Exposed Structural Steel & Miscellaneous Metals	Full Gloss No. SW1811
Exposed Building System Frames	Full Gloss No. SW1811
Exposed Building System Personnel Doors & Frames	Full Gloss, match wall panels
Exposed Building System Service Door Frames	Full Gloss, match wall panels
Interior Steel Doors and Frames:	Full Gloss No. SW1811
Gypsum Wallboard	Semi-Gloss No. SW1683
Exposed Exterior Portable Building Wall & Roof Trim	Full Gloss "Safety Yellow"
Exposed Exterior Portable Building Eave & Drip Trim	Full Gloss "Safety Yellow"
Exposed Portable Building Wall Panel Drip Flashing	Full Gloss "Safety Yellow"
Portable Building Steel Doors and Frame	Full Gloss "Safety Yellow"
Pipe Bollards	Full Gloss "Safety Yellow"
Electrical Backboard	Semi-Gloss No. SW1683

FIELD QUALITY CONTROL:

Surveillance will be performed by the Contractor's Representative to verify compliance of the work to the drawings and specifications.

END OF SECTION 09900

SECTION 13120--METAL BUILDING SYSTEMS

PART 1--GENERAL

SUMMARY:

The Subcontractor shall furnish and install metal building systems, complete, as shown on the subcontract drawings and as specified herein.

Section Includes: Work includes, but is not limited to:

- Primary and secondary structural framing.
- Roof panels.
- Wall panels.
- Exterior door frames.
- Exterior personnel doors.
- Accessories and trim.

Related Sections:

- Section 05100, Structural Steel and Miscellaneous Metals
- Section 07190, Vapor Barriers
- Section 07200, Thermal Insulation
- Section 07901, Joint Sealants
- Section 08110, Steel Doors and Frames
- Section 08362, Overhead Sectional Doors
- Section 15025, Welding

REFERENCES:

The following Codes and Standards, including others referenced therein, form a part of this Section to the extent specified herein:

AMERICAN INSTITUTE OF STEEL CONSTRUCTION (AISC)

AISC (ASD) Specification for Structural Steel for Buildings – Allowable Stress Design (ASD)

AMERICAN IRON AND STEEL INSTITUTE (AISI)

AISI Specification for the Design of Cold-Formed Steel Structural Members

AMERICAN SOCIETY FOR TESTING AND MATERIALS (ASTM)

ASTM A 36 Standard Specification for Carbon Structural Steel

ASTM A 53	Standard Specification for Pipe, Steel, Black and Hot-Dipped, Zinc-Coated, Welded and Seamless
ASTM A 325	Standard Specification for Structural Bolts, Steel, Heat-Treated, 120/105 ksi Minimum Tensile Strength
ASTM A 500	Standard Specification for Cold-Formed Welded and Seamless Carbon Steel Structural Tubing in Rounds and Shapes
ASTM A 501	Standard Specification for Hot-Formed Welded and Seamless Carbon Steel Structural Tubing.
ASTM A 529	Standard Specification for High-Strength Carbon-Manganese Steel of Structural Quality
ASTM A 570	Standard Specification for Steel, Sheet and Strip, Carbon, Hot-Rolled, Structural Quality
ASTM A 572	Standard Specification for High-Strength, Low-Alloy Columbium-Vanadium Structural Steel
ASTM A607	Standard Specification for Steel, Sheet and Strip, High-Strength, Low-Alloy, Columbium or Vanadium, or Both, Hot-Rolled, and Cold-Rolled
ASTM A 755	Standard Specification for Steel Sheet, Metallic Coated by the Hot-Dipped Process and Pre-Painted by the Coil-Coating Process for Exterior Building Products

METAL BUILDING MANUFACTURERS ASSOCIATION (MBMA)

MBMA	Recommended Design Practices Manual, for applicable loads and load combinations
MBMA	Metal Building Systems Manual, for collateral loads

INTERNATIONAL CONFERENCE OF BUILDING OFFICIALS (ICBO)

UBC	Uniform Building Code

SUBMITTALS:

Shop Drawings: Submit shop drawings, completely detailing all major trusses (if any), rigid frames, purlin/girt locations, columns, wall panels, roof panels, ceiling panels, windows, doors, base plates, anchor bolts, anchor bolt locations, portal frame locations, rain gutters, downspouts, flashings and wall base conditions, and any other graphic information required to evaluate the complete structure including all dimensions.

Design calculations: Submit design calculations showing all loads specified. Design calculations shall be stamped by a Registered Professional Structural Engineer.

Warranties: Submit sample warranties for approval prior to procurement. Submit 3 copies of executed warranties for information to Contractor's Representative before final acceptance of the project.

Certification: Submit certification that panels and accessories have been installed in accordance with the manufacturer's specifications.

Interior Building Volume: The HVAC system is designed around the volume of the specified building. Submit HVAC calculations if an "Or equal" metal building is proposed and the internal volume of the proposed building is 5% greater or smaller than the specified building. Calculations shall include the size of fans, filters and ductwork.

QUALITY CONTROL:

Regulatory Requirements (Codes and Standards): Comply with provisions of the following codes and standards, unless otherwise specified:

Structural Steel:

AISC (ASD)

Primary and Secondary Members:

MBMA	Recommended Design Practices Manual, for applicable loads and load combinations
MBMA	Metal Building Systems Manual, for collateral loads
UBC	Wind and Seismic loads

Qualifications: Provide prefabricated metal buildings as produced by a manufacturer who is regularly engaged in fabrication of pre-engineered metal structures of type and quality indicated. All components shall be provided from one manufacturer.

WARRANTIES:

The roofing and siding shall be warranted for a minimum of 20 years against wind damage, leakage, paint fade, chipping, peeling, attachment and rusting. Warranty shall include labor and materials for replacement of defective panels. Warranty shall not be pro-rated over 20 year period.

PART 2--PRODUCTS

MANUFACTURER:

Building shall be as manufactured by CECO Buildings Division, or approved equal. Design details, dimensions, and sizes are based on a CECO building. If an "or equal" is submitted, all CECO dimensions and clearances shall be taken as minimums for evaluation of submittal.

Subcontractor shall be responsible for all adjustments required to plans as a consequence of changing building manufacturer. Subcontractor shall provide calculations on sizes and number of anchor bolts required to develop building reactions. All calculations, shop drawings and special process procedures as welding, painting and structural bolting, shall be submitted for approval and shall be stamped by a registered professional engineer licensed to practice Structural Engineering in the State of Idaho.

Type: The metal building shall be a prefabricated, weather-tight, free-standing building having a structural steel frame. The building shall be a rigid frame. The roof slope shall be 3 in. per foot. Clear height shall be 10 ft minimum.

DESIGN LOADS:

The building shall be designed for the following applied loads in addition to dead load:

Vertical Live Loads: Roof covering shall be designed for either 50 psf uniformly distributed or a 200-lb concentrated load (over a 1 x 1-ft area) located at center of maximum roofing span.

All other building components shall be designed for a 30 psf snow load, with an allowance for ice buildup at the eaves.

Wind Loads: The wind load on the structure shall be designed for an 80 mph wind speed, calculated according to the UBC exposure Class "C".

Seismic Loads: Seismic loads shall be determined and applied in accordance with the UBC Zone 2b.

Auxiliary Loads: All dynamic live loads required by the contract document, such as material handling systems and vibrating equipment.

Collateral Loads: All additional dead loads, other than the weight of the metal building system, such as mechanical HVAC systems, electrical systems, and ceilings. Collateral loads shall be a minimum of 10 pounds per square foot as defined in the Metal Building Systems Manual published by the MBMA.

Maximum Deflection: Deflection shall be limited to L/240 for all building components.

Combination of Loads: The combining of normal loads, auxiliary loads and collateral loads for design purposes shall be as prescribed and recommended by the MBMA "Recommended Design Practices Manual."

MATERIALS:

Hot-Rolled Structural Shapes: Conform to ASTM A 36 or A 529, Grade 50.

Tubing or Pipe: Conform to ASTM A 500, Grade B; ASTM A 501, or ASTM A 53.

Members Fabricated from Plate or Bar Stock: 42,000 psi minimum yield strength; Conform to ASTM A 529, A 570, or A 572.

Members Fabricated by Cold Forming: Conform to ASTM A 607, Grade 50.

Galvanized Steel Sheet: Conform to ASTM A 446 with G90 coating. "Class" to suit building manufacturer's standards.

STRUCTURAL FRAMING COMPONENTS:

Rigid Frames: Rigid frames shall b hot rolled structural steel, factory welded, and shop painted. Furnish complete with attachment plates, bearing plates, and splice members. Factory drilled for bolted field assembly.

Length of span and spacing of frames shall be as shown on drawings except slight roof slope variations are acceptable to meet manufacturer's standard.

Wind Bracing: No "x" type rod bracing shall be used in bays where bracing would cross window or door openings, or interfere with process systems or piping. If "x" type bracing can not be used, knee bracing (as shown in the drawings) or portal frame bracing may be used.

Secondary Framing: Purlins, eave girts, girts, flange and sag bracings shall be "Z" or "C" roll formed sections pre-punched for fasteners, and shall be shop painted. Roof purlins shall be spaced a maximum of 5'0" O.C. Base channel, sill angle, purlin spacers shall be minimum of 14 gauge cold formed steel.

Anchor Bolts: The anchor bolts for the rigid frames shall be designed by the building systems manufacturer. Location and placement shall be coordinated with the foundation rebar shown on the drawings. Any changes in rebar placement shall be brought to the attention of the Contractor and engineering calculations shall be provided taking into account the changed rebar location.

Bolts: Bolts shall be ASTM A 325 in quantities necessary for design loads and connection details. Provide zinc- or cadmium-plated units when in direct contact with panels. Direct tension indicators shall be provided as specified in Section 05100, Structural Steel and Miscellaneous Metals" of these specifications.

Fabrication: Shop fabricate to the indicated size and section, complete with base plates, bearing plates, and other plates as required for erection, welded in place, and with all required holes for anchoring or connections shop drilled or punched to template dimensions.

Shop connections shall be power riveted, bolted, or welded.

Field connections shall be bolted.

Shop Painting: Surfaces to be primed shall be cleaned of loose mill scale, rust, dirt, oil, grease, and other matter precluding paint bond. Follow procedures SSPC-SP3 for power tool cleaning, SSPC-SP2 for hand tool cleaning, and SSCP-SP1 for solvent cleaning.

Prime structural steel primary and secondary framing members with manufacturer's standard rust-inhibitive primer having over 50% rust-inhibitive pigment, such as organic zinc. No lead or chromate will be allowed.

Prime galvanized members, after phosphoric acid pretreatment, with zinc dust-zinc oxide primer.

ROOFING AND SIDING:

General: Provide roofing and siding sheets formed to general profile or configuration as specified. Provide flashings, closers, fillers, metal expansion joints, ridge covers, and other sheet metal accessories, factory formed of same material and finish as roofing and siding.

Roof Panels: The Interlocking-Standing Seam Roof Covering shall carry an Underwriters' Laboratories, Inc., Uplift Classification of not less than Class 90 and shall consist of material not less than 24 gauge aluminized coated steel. The panels shall be installed with the ribs upstanding and parallel to the roof slope. The panels shall be CRP 16 as manufactured by CECO or approved equal.

All longitudinal interlocking ribs as well as any transverse end laps shall be properly sealed, according to the manufacturer's instructions, with non-drying sealant.

The roof panels shall be secured to each structural support by a steel clip concealed between the adjacent male and female ribs and fastened under that panel's weather surface. Clip shall be long enough to allow Styrofoam thermal spacer on top of purlin.

Penetrations through the roof panel by fasteners shall be limited to only those required at the rake eaves, at end laps and at the ridge. All exposed fasteners shall be fitted with weather-seal washers of hydrocarbon-based elastomer (synthetic rubber) with a compatible metal backing.

Thermal (break) spacers shall be provided continuously at each structural support to minimize thermal conductivity. The thermal spacer shall be a continuous extruded polystyrene insulation strip, 3 in. wide x 1 in. thick.

Wall Panels Exterior: The Interlocking-Ribbed wall covering shall consist of 16 in. wide embossed panels, of not less than 24 U.S. gauge fluoropolymer enamel coated steel with approximately 3 in. deep male and female ribs. The panels shall be "ShadowRib" as manufactured by MBCI, or approved equal. The wall panels shall be applied to the structural framing with the interlocking ribs toward the interior of the structure. The interlocking ribs

shall be secured 16 in. o.c. at the base, at each intermediate girt and the support at which it terminates by means of an interior fastener, thus eliminating any thru-wall fastening.

All interior fasteners, i.e., screws, bolts and nuts, etc., shall be of carbon steel having a protective coating of either zinc or cadmium..

STEEL PERSONNEL DOORS:

Exterior Insulated Steel Doors: Manufacturer's standard thermally insulated doors with factory-finish, and glass lites as shown in compliance with requirements of Section 08110—Steel Doors and Frames.

STEEL DOOR FRAMES:

Provide metal building systems manufacturer's standard factory-finished steel frames and components in compliance with requirements of Section 08110—Steel Doors and Frames as shown and required for erection and support of metal building systems wall framing. Extend jambs from floor to roof framing for support of wall girt framing and door head frames.

ACCESSORIES:

Flexible Closure Strips: Closed-cell, expanded cellular rubber, self-extinguishing, cut or premolded to match corrugation configuration of siding sheets. Provide to ensure weathertight construction, at base intermediate flashing and top of panels.

Sealing Tape: Sealing tape shall be 100% solids, pressure sensitive grey polyisobutylene compound tape with release paper backing. Not less than 1/2 in. wide and 1/4 in. thick, nonsag, nontoxic, nonstaining and permanently elastic.

Joint Sealant: Joint sealant shall be one-part elastomeric; polyurethane, polysulfide, or silicon rubber as recommended by building manufacturer.

Mechanical Equipment Curbs and Flashing: Roof curbs for HVAC/mechanical equipment penetrations in roof shall be as manufactured by Custom Curb Inc., for the specific application, or approved equal.

Ice Stops: Provide ice stops to prevent snow and ice damage to gutters. Ice stops shall be "ICEJAX" as manufactured by Snowjax Inc., Mechanicsburg, Pennsylvania, or approved equal. "ICEJAX" shall be adhered with Loctite "Depend", or approved equal, to metal roof panels.

FINISH:

Colors: Manufacturer's standard colors approved as matching colors from MBCI Co. as follows:

Wall panels: "Almond".
Wall and Roof Edge Trim: "River Teal".
Roof Panels and Trim: "Natural Patina"
Exterior Door Frames: "River Teal".
Exterior Personnel Doors: "River Teal".

Fluoropolymer Finish: Provide factory-applied fluoropolymer finish to exterior galvanized steel siding and interior liner wall and ceiling panels, and related trim and accessories.

PIPE PENETRATIONS:

For pipe penetrations through the roof use a "DEKTITE" pipe flashing unit as manufactured by ITW Buildex, or approved equal. Provide a stainless steel hose clamp for positive sealing of flashing to pipe.

PART 3--EXECUTION

ERECTION:

Framing: Erect structural framing true to line, level and plumb, rigid and secure. Level base plates to a true even plane with full bearing to supporting structures, set with double-nutted anchor bolts. Use a non-shrinking grout to obtain uniform bearing and to maintain a level base line elevation. Moist cure grout for not less than 7 days after placement.

Bracing: Install diagonal rod or angle bracing in roof as required.

Diagonal/rod bracing shall not interfere with ceiling purlins.

Install wind bracing in sidewalls as specified.

Framed Openings: Provide shapes of proper design and size to reinforce opening and to carry loads and vibrations imposed, including equipment furnished under mechanical or electrical work. Securely attach to building structural frame. Comply with additional requirements of Section 08110—Steel Doors and Frames for installation of steel personnel doors and frames. Reinforce doors and frames to receive surface-applied hardware. Drilling and tapping for surface-applied hardware may be done at Project site.

ROOFING AND SIDING:

General: Install panels and associated items for neat and weather tight enclosure. Avoid "panel creep" or application not true to line. Protect factory finish from damage.

Provide weather seal under ridge cap. Flash and seal roof panels at eave, swaged joints and rake with manufacturer's standard rubber, neoprene, or other closures to exclude weather.

Roof Sheets: Provide sealant tape at lapped joints of ribbed or fluted roof sheets, and between roof sheeting and accessories.

Apply sealant tape continuous to clean, dry surface of weather side of fastenings on end laps and on sidelaps of corrugated or nesting type, ribbed or fluted panels and elsewhere to make weatherproof to driving rains.

Wall Sheets: Apply elastomeric sealant continuous between metal base channel (sill angle) and concrete foundation and elsewhere as necessary for waterproofing. Handle and apply sealant and back-up in accordance with sealant manufacturer's recommendations.

Align bottoms of wall panels. Fasten flashings, trim around openings, etc. with self-tapping screws.

Sheet Metal Accessories: Install louvers and other sheet metal accessories in accordance with manufacturer's recommendations for positive anchorage to building and weathertight mounting.

Ceiling and Interior Wall Liner Panels: Install all ceiling and wall liner panels as shown on the drawings.

Certification: The Subcontractor shall submit a certified statement that all standing seam metal roofing, flashings, rain gutter and downspout, wall panels, fascia, structural framing and anchor bolts have been installed in strict accordance with the manufacturer's printed instructions and this specification.

FIELD QUALITY CONTROL:

Contractor Supplied Testing:

General: The Contractor's Representative will inspect high-strength bolted connections and perform tests, visual inspection and prepare test reports unless noted otherwise.

Shop Bolted Connections: Inspect in accordance with AISC specifications.

Shop Welding: Inspect during fabrication of structural steel as required in [Section 05100] [Section 15025].

Surveillance will be performed by the Contractor's Representative to verify compliance of the work to the drawings and specifications.

END OF SECTION 13120

SECTION 13121—PORTABLE BUILDINGS

PART 1--GENERAL

SUMMARY:

The Subcontractor shall furnish and install portable buildings, complete, as shown on the subcontract drawings and as specified herein.

Section Includes: Work includes, but is not limited to:

Shop fabrication and finish of wellhouse portable buildings complete, without floors.
Shipment, erection, and anchoring of portable buildings to permanent foundations.

Related Sections: Component systems included in the fabrication of work of this section are included in the following related sections:

Section 05061, Carbon Steel Structural Welding
Section 05100, Structural Steel and Miscellaneous Metals
Section 05400, Light Gage Metal Framing
Section 07190, Vapor Barriers
Section 07200, Thermal Insulation
Section 07610, Preformed Steel Siding and Roofing
Section 07901, Joint Sealants
Section 08110, Steel Doors and Frames
Section 08700, Door Hardware
Section 09250, Gypsum Wallboard
Section 09900, Painting

REFERENCES:

The following Codes and Standards, including others referenced therein, form a part of this Section to the extent specified herein:

INTERNATIONAL CONFERENCE OF BUILDING OFFICIALS (ICBO)

UBC Uniform Building Code

SUBMITTALS:

Comply with submittal requirements for each component system required for work of the Section as specified in "Submittals" Article of each corresponding related Section.

QUALITY CONTROL:

Regulatory Requirements (Codes and Standards): Comply with provisions of the following codes and standards, unless otherwise specified:

UBC	Wind and Seismic loads

PART 2--PRODUCTS

COMPONENT SYSTEMS:

Rigid Structural Steel Frames: Rigid frames shall be hot rolled structural steel as shown, factory welded in accordance with requirements of Section 05061--Carbon Steel Structural Welding, and shop painted in accordance with requirements of Section 05100--Structural Steel and Miscellaneous Fabrications. Furnish complete with anchor bolt assemblies as shown for placement in concrete foundations.

Light-Gage Metal Framing: Comply with requirements of Section 0540--Light Gage Metal Framing, as shown.

Vapor Barrier: Comply with requirements of Section 07190--Vapor Barrier, as shown.

Thermal Insulation: Comply with requirements of Section 07200--Thermal Insulation, as shown.

Preformed Steel Siding and Roofing: Comply with requirements of Section 07610—Preformed Steel Siding and Roofing, as shown.

Joint Sealants: Comply with requirements of Section 07901--Joint Sealants, as shown.

Steel Doors and Frames: Comply with requirements of Section 08110--Steel Doors and Frames, as shown.

Door Hardware: Comply with requirements of Section 08700--Door Hardware, as shown.

Insulation/ Finish Board: Comply with requirements of Section 07901--Joint Sealants, as shown.

Painting: Comply with requirements of Section 09900--Painting, as shown.

ACCESSORIES:

Compressible Base Seals: Closed-cell neoprene or EPDM, as specified in Section 05100, Structural Steel and Miscellaneous Metals, and as shown.

FABRICATION:

Shop-fabricate and -install component systems to the indicated size and section, complete with base plates, bearing plates, and other plates as required for on-site anchorage. Fabricate with all required holes for anchoring or connections shop drilled or punched to template dimensions. Completely fabricate and install components, prior to shipping, hoisting, and placement on permanent foundations as shown.

PART 3--EXECUTION

TRANSPORTATION AND ERECTION:

Transport portable buildings to site, off-load, set on permanent foundations, and anchor in place as shown.

PROTECTION:

Protect portable buildings from damage during transportation, hoisting, and placement on site. Repair or replace damages in accordance with component system product manufacturer's recommendation and instructions. Remove protective coverings after installation on permanent foundations.

FIELD QUALITY CONTROL:

Contractor Supplied Testing:

General: The Contractor's Representative will inspect high-strength bolted connections and perform tests, visual inspection and prepare test reports unless noted otherwise.

Shop Welding: Inspect during fabrication of structural steel as required in Section 05061. Surveillance will be performed by the Contractor's Representative to verify compliance of the work to the drawings and specifications.

END OF SECTION 13121

SECTION 13400--INSTRUMENTS AND EQUIPMENT

PART 1--GENERAL

WORK DESCRIPTION:

The Subcontractor shall provide all instrumentation and controls as specified in the design drawings for the New Pump and Treat Facility (NPTF) and ensure all performance requirements are met.

Section Includes:

The Subcontractor shall provide the following instrumentation and controls for the NPTF project including, but not limited to:

1. Level Control Valves
2. Flowmeters
3. Pressure Gauges
4. Level Transmitters
5. Level Switches
6. Programmable Logic Controller
7. Auto Dialer System (GFE)

RELATED SECTIONS:

Section 16000 - Electrical General Provisions.

SYSTEM DESCRIPTION:

General Design Requirements: A description of the design and performance requirements for the instrumentation equipment is contained in Attachment A.

Electronic analog transmitters and receivers shall have their input and output signals isolated from ground.

Contact closure outputs shall be "dry" contacts isolated from ground.

For detailed performance requirements for all instrumentation for this design package, reference Attachment A.

Instrumentation shall perform to the stated requirements whether

stationary or mobile, and require minimal calibration if remounted or moved.

QUALITY CONTROL:

Codes and Standards: The following standards and criteria (latest edition) shall be used where applicable in the design of the building covered by this specification.

American Society of Mechanical Engineers (ASME):

ASME B16.5-88/B16.5A-92 Pipe Flanges and Flanged Fittings.

American Society for Testing and Materials (ASTM):

ASTM A105/A105M-96 Standard Specification for Carbon Steel Forgings for Piping Applications.

National Fire Protection Association (NFPA):

NFPA 70-96 National Electrical Code, 1996 Edition.

National Electric Manufacturing Association (NEMA):

NEMA ICS 6-93 Enclosures for Industrial Control and Systems; Revision 1 - March 1989.

General:

Instrumentation equipment shall be new, industrial type, of the function and type specified in Part 2.

Instrumentation equipment provided shall be compatible with intended service. Instrument equipment shall be calibrated to manufacturer's standards. Test equipment shall be calibrated and shall be traceable by tag number, make, and model number.

Manufacturers' Qualifications: Manufacturers shall have 5 years of verifiable experience in the production of instrumentation equipment of the same type and similar performance as that specified herein.

Instrument equipment shall be calibrated in accordance with manufacturers recommendations.

SUBMITTALS FOR REVIEW:

Product Data:
Provide catalog "cut sheets," data sheets, wiring diagrams and flow characteristic curves prior to procurement.

Provide valve sizing and actuator sizing calculations for flow control valves with

catalog cut sheets and wiring diagrams.

SUBMITTALS FOR INFORMATION:

Installation instructions, including recommended calibration procedures and installation details. Include frequency of calibration required at the time after system installation and regular intervals of time thereafter.

SUBMITTALS AT PROJECT CLOSEOUT:

Provide certification of test equipment (calibration records) used to complete the work as described herein.

Provide Test and Calibration reports listing equipment used, person or persons performing the tests, date tested, device or circuit tested, and results of test.

Provide Operation and Maintenance (O&M) manuals.

Identify preventive maintenance activities as recommenced by the manufacturer. Include maintenance service telephone numbers and information along with product documentation.

Provide a suggested spare parts inventory for each type of equipment.

Submit manufacturers warranty and ensure forms have been filled out in owners name and registered with manufacturer.

DELIVERY, STORAGE, HANDLING, AND SHIPPING:

Product shipping container(s) shall contain packing materials to prevent the entrance of water to instrument surfaces, interior, and exterior. Product shipping container(s) shall be clearly marked "FRAGILE - DO NOT DROP," and shall be furnished with an itemized invoice stating the contents and quantity of products contained therein.

PROJECT CONDITIONS

The INEEL is located near Idaho Falls, Idaho, approximately 4900 feet above sea level. Ambient Temperature Range is from -20 to 100 degrees F, with a barometric pressure of approximately 29.0 inches Hg absolute (mean at 70 degrees F). Relative Humidity varies from 20 percent to 95 percent.

Electrical Supply for instruments, unless otherwise noted, shall be 120 volts, single phase, 60 Hz.

MAINTENANCE

Any extra/replacement parts or materials required to maintain acceptable product performance up to the time in which acceptance testing is complete, must be provided by the Subcontractor.

PART 2--PRODUCTS

INSTRUMENTATION:

Level control valves, (See Attachment A, Sheet 1)
Control valve shall be provided with an electric actuator. Flow control valves shall have a linear flow characteristic. Valve shall be globe or rotary-control style. Actuators shall accept a 4-20 mAdc signal as the control signal input. Nominal input impedance shall be 250 ohms. In closing direction, flow valve shall seat before actuator reaches travel limit. In opening direction, actuator shall engage a stop before actuator reaches its travel limit. Actuator assemblies shall be sized to provide force required to ensure total closure and to ensure standard leakage rates are not exceeded when differential pressure in flow valve body is at maximum differential pressure. Available power for electronic actuators will be 120 VAC, 60 Hz, single phase

Flow Meters (see Attachment A, Sheets 2-4)
Flow meters will consist of a flow element, flow indicator and flow signal transmitter. The flow elements shall be either paddlewheel or rotor type with a remote indicator mounted in the vicinity of the flow element. The indicator shall display both flow rate and total flow and have a digital display of eight digits. Scale shall be in gallons per minute for flow rate and in gallons or gallons multiplied by a power of 10 for total flow. Signal converters/transmitters shall produce an output signal of 4-20 mAdc. Minimum output shall be equal to 0 percent of span and maximum output shall be equal to 100 percent of span. Output shall be linear with respect to flow.

Pressure Gauges (See Attachment A, Sheet 5-6)
Pressure element shall be bourdon tube or diaphragm. Elements in contact with the process shall be manufactured from material suitable for specific

process application. Gauge shall have a 4-1/2-inch dial, 1/2-inch threaded connection. All gauges shall be vibration and shock resistant. Scale shall be selected so that normal operating range is between 33 percent and 67 percent of span.

Level Transmitters (see Attachment A, Sheet 7)
Ultrasonic level transmitters will be required to monitor the water levels in the surge tank and the air stripper sumps. The sensors will be mounted in a vertical position. For the surge tank, the transmitters will be mounted on the top of the tank. For the air strippers the transmitters will be mounted at the top of a 2'' diameter site glass. Transmitters will be powered by a 24VDC power supply and will output a 4-20 mA signal. The transmitter has a 2" mNPT connection.

Level Switches (see Attachment A, Sheets 8)
Capacitance type level switches will be required to sense low level in tanks. Capacitance type sensor, suitable for side mounting, 3/4 inch mnpt process connection. DPDT output contacts, rated at 5 Amps, 120 VAC, with single setpoint. Available power is 120 VAC, 60 Hz, single phase.

Float (or displacement) type level switches will be required to sense high level in Top mounted float switch assembly, float diameter not to exceed 2 inches. DPDT output contacts, rated 5 Amps, 120 VAC, single setpoint.

Programmable Logic Controller (See Attachment A, Sheets 9)
The PLC will be an independent computer processor with supporting I/O hardware to support both analog and relay inputs and outputs. The PLC shall be powered using 120VAC 60 Hz, single phase power. The main operator interface will be provided by a programmable touch screen panel. The PLC shall be programmable to allow the display of any input or output parameter provided by the system. The PLC shall have a battery backup and be made to indicate system parameters and initiate alarms based on upset conditions within the system.

Auto Dialer System (no data sheet)
This system will consist of an automatic dialing unit connected to a radio telephone unit. This system will be provided to the subcontractor by the Contractor. In conjunction with each other this system will automatically page a system operator in the event of a system upset condition. The auto dialer will be a Zetron Model 1512, Part No. 901-9151 with IXO option, Part No. 950-9179, and 115VAC, 60 HZ, wall transformer. This unit is to

be compatible with the radio telephone subscriber terminal. The radio telephone transmitter system will be a Telepoint Model SR-20-2-300 radio telephone subscriber terminal to be compatible with the existing Test Area North base station. Transmitter power output shall be approximattly 10 Watts. Audio response shall be +1/-3dB (from a 6 dB/Oct). Pre-Emphasis System is to be complete with all necessary hardware required, including but not limited to, antenna, cabling, and mounting hardware.

LABELING:

Instruments requiring identification shall be tagged accordingly with a stainless steel 1-inch by 2 1/2-inch by 1/16-inch-thick tag (minimum). Lettering shall be minimum 1/4-inch high and stamped so that it can be easily read and identified. Tags shall be secured to the instruments by a beaded stainless steel chain so that they will remain on the instrument.

PART 3--EXECUTION

CLEANING:
Instruments shall be cleaned in accordance with the manufacturer's recommended cleaning procedures. After cleaning, work shall be free from contamination with no residual contaminants present that could cause the instrument to become inoperative, no residual moisture present, and no corrosion products, such as rust, present.

ATTACHMENTS:

ATTACHMENT A:
The following Instrument Data Sheets are attached:

1.	Level Control Valves	1
2.	Flow Meters	2 thru 4
3.	Pressure Gages	5 and 6
4.	Level Transmitters	7
5.	Level Switches	8
6.	Programmable Logic Controller	9

END OF SECTION 13400

	REQUISITION NO.		VENDOR					
1	Tag No.		LCV-307		LCV-308		LCV-309	
2	Item No.							
3	Model No.		*		*		*	
4	Service		A-311 INFLUENT		A-310 EFFLUENT		A-311 EFFLUENT	
			TANK LVL/LINE FLOW CONTROL		AS LVL/LINE FLOW CONTROL		AS LVL/LINE FLOW CONTROL	
5	Line No.							
6	P&ID No.		P-1		P-1		P-1	
	SERVICE CONDITIONS							
7	Fluid	Units	WATER		WATER		WATER	
8	Min Flow	Max Flow	20 GPM	150 GPM	20 GPM	150 GPM	20 GPM	150 GPM
9	Normal Flow	Sizing Flow	75 GPM	125 GPM	75 GPM	125 GPM	75 GPM	125 GPM
10	Inlet Press Max	Norm	35 PSI	30 PSI	52 PSI	45 PSI	52 PSI	45 PSI
11	dP Max		35 PSI		52 PSI		52 PSI	
12	dP - Valve Sizing		13 PSI @60% OPEN		11 PSI @ 70% OPEN		11 PSI @ 70% OPEN	
13	Temp Max °F	Norm °F	80	55	80	55	80	55
14	sp gr @ 60 °F	@ Opr Temp	1	1	1	1	1	1
15	Viscosity @ Opr Temp	cp	-					
	BODY							
16	Body Size	Port Size	2"	N/A	2"	N/A	2"	N/A
17	Type of Body							
18	Material		CARBON STEEL		CARBON STEEL		CARBON STEEL	
19	End Connections		FLANGED		FLANGED		FLANGED	
20	Bonnet							
21	Lubricator	Isolating Valve	NO	NO	NO	NO	NO	NO
22	Packing or Seal							
23	Position Indicator		YES		YES		YES	
24	Guiding							
25	No. of Ports							
26	Valve Characteristic		LINEAR		LINEAR		LINEAR	
27	Cage							
28	Plug (Disc)		ROTARY CONTROL		ROTARY CONTROL		ROTARY CONTROL	
29	Seat							
30								
31	Cv for Sizing Flow	Furn Cv	35	51	38	51	38	51
	NOISE DATA							
32	Line Size	Port Schedule	2"		2"		2"	
33	Insulation		N/A		N/A		N/A	
34	Sound Pressure Level	dBA	85 (MAX)		85(MAX)		85(MAX)	
	ACTUATOR AND ACCESSORIES							
35	Actuator Type		ELECTRIC		ELECTRIC		ELECTRIC	
36	Fail Position		LAST POSITION		LAST POSITION		LAST POSITION	
37	Close @	Open @	4 mAdc	20 mAdc	4 mAdc	20 mAdc	4 mAdc	20 mAdc
38	dP For Actuator Sizing		50 PSI		60 PSI		60 PSI	
39	Positioner Required	w/ Filter Rgltr	NO	NO	NO	NO	NO	NO
40	Bypass	Gauges	NO	NO	NO	NO	NO	NO
41	For Input Signal of							
42	Output Shall Be							
43	Handwheel Type							

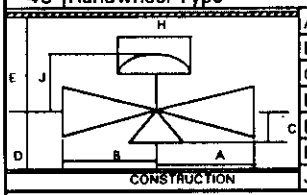

A. Face to Face	MFR. STD.	MFR. STD.	MFR. STD.
B. Face to Center	"	"	"
C. Face to Center	"	"	"
D. Clearance	"	"	"
E. Clearance	"	"	"
H. Actuator Dia.	"	"	"
J. Actuator Height	"	"	"

Notes:

1. "*" INFORMATION SUPPLIED BY MANUFACTURER, LESLIE CONTROLS INC., TAMPA FL.

PARSONS	CONTROL VALVES	Sheet 1	Job Number OU 1-07B NPTF
Instrument Data Sheet		Document Number 13400-ATTACHMENT A	Rev 0

ENG 003

	REQUISITION NO.			VENDOR							
1	Loop Tag No.			FE/FIT-33		FE/FIT-38		FE/FIT-39		FE/FIT-40	
2	Item No.										
3	Model No.			*		*		*		*	
4	Service			TAN-33 EXTRACTION FLOW LINE		TAN-38 EXTRACTION FLOW LINE		TAN-39 EXTRACTION FLOW LINE		TAN-40 EXTRACTION FLOW LINE	
5	Line No.										
6	P&ID No./Section			P-1		P-1		P-1		P-1	
	GENERAL SERVICE CONDITIONS										
7	Fluid			WATER		WATER		WATER		WATER	
8	Normal Flow (units)			100 GPM		100 GPM		100 GPM		100 GPM	
9	Flow (units)	Max.	Min.	110 GPM	48 GPM	110 GPM	48 GPM	110 GPM	48 GPM	200 GPM	75 GPM
10	Temperature (units)	Max.	Min.	80 °F	50 °F	80 °F	50 °F	80 °F	50 °F	80 °F	50 °F
11	Pressure (units)	Max.	Min.	150 Psig	0 Psig	150 Psig	0 Psig	150 Psig	0 Psig	150 Psig	0 Psig
12	Velocity (units)	Max.	Min.	5.4 FPS	2.4 FPS	5.4 FPS	2.4 FPS	5.4 FPS	2.4 FPS	9.8 FPS	3.6 FPS
13	Specific Gravity	Max.	Norm.	1	1	1	1	1	1	1	1
14	Extra Conditions or Requirements			NONE		NONE		NONE		NONE	
	MEASURING ELEMENT			FE-33		FE-38		FE-39		FE-40	
15	Sensor Type			PADDLEWHEEL/ROTOR		PADDLEWHEEL/ROTOR		PADDLEWHEEL/ROTOR		PADDLEWHEEL/ROTOR	
16	Size and Type of Connection			3" STRAP-ON SADDLE		3" STRAP-ON SADDLE		3" STRAP-ON SADDLE		3" STRAP-ON SADDLE	
17	Temperature and Pressure Rating										
18	Rated Maximum - Minimum Flow Rate			20 FPS	1 FPS	20 FPS	1 FPS	20 FPS	1 FPS	20 FPS	1 FPS
19	Accuracy			+/-2%		+/-2%		+/-2%		+/-2%	
20	Rotating Element Material			*		*		*		*	
21	Shaft Material			*		*		*		*	
22	Main Cover or Outer Housing			POLYPROPOLENE		POLYPROPOLENE		POLYPROPOLENE		POLYPROPOLENE	
23	Extra Features or Requirements			NONE		NONE		NONE		NONE	
	INDICATOR/TRANSMITTER			FIT-33		FIT-38		FIT-39		FIT-40	
24	Type of Register			FLOWRATE/TOTALIZER		FLOWRATE/TOTALIZER		FLOWRATE/TOTALIZER		FLOWRATE/TOTALIZER	
25	Output Signal (units)			4-20 mA		4-20 mA		4-20 mA		4-20 mA	
26	Calibrated Flow Range (units)			1/2" NPT		1/2" NPT		1/2" NPT		1/2" NPT	
27	Display Range - No. of Digits			10E8	6	10E8	6	10E8	6	10E8	6
28	Enclosure Class			NEMA 4		NEMA 4		NEMA 4		NEMA 4	
29	Reset Required			YES		YES		YES		YES	
30	Conduit Conn. Size (units)			1/2" NPT		1/2" NPT		1/2" NPT		1/2" NPT	
31	Power Requirement / Elect. Code			120V, 60HZ	GENERAL	120V, 60HZ	GENERAL	120V, 60HZ	GENERAL	120V, 60HZ	GENERAL
32	Alarms			NO		NO		NO		NO	
33	Extra Features or Requirements			NONE		NONE		NONE		NONE	

Notes:

1. "*" INFORMATION AND OR DATA TO BE FURNISHED BY VENDOR.

PARSONS Instrument Data Sheet	**FLOWMETERS**	Sheet 2	Job Number OU 1-07B NPTF
		Document Number 13400-ATTACHMENT A	Rev 0

MAGNETIC FLOWMETERS

	REQUISITION NO.			VENDOR								
1	Loop Tag No.			FE/FIT-313		FE/FIT-314		FE/FIT-317		FE/FIT-318		
2	Item No.											
3	Model No.			*		*		*		*		
4	Service			A-311 INFLUENT FLOW LINE		A-310 INFLUENT FLOW LINE		SYSTEM EFFLUENT FLOW LINE		T-300 INFLUENT FLOW LINE		
5	Line No.											
6	P&ID No./Section			P-1		P-1		P-1		P-1		
	GENERAL SERVICE CONDITIONS											
7	Fluid			WATER		WATER		WATER		WATER		
8	Normal Flow (units)			75 GPM		75 GPM		150 GPM		150 GPM		
9	Flow (units)	Max.	Min.	150 GPM	20 GPM	150 GPM	20 GPM	300 GPM	100 GPM	300 GPM	100 GPM	
10	Temperature (units)	Max.	Min.	80 °F	50 °F	80 °F	50 °F	80 °F	50 °F	80 °F	50 °F	
11	Pressure (units)	Max.	Min.	Psig	0 Psig	Psig	0 Psig	Psig	0 Psig	Psig	0 Psig	
12	Velocity (units)	Max.	Min.	FPS	FPS	FPS	FPS	FPS	FPS	FPS	FPS	
13	Specific Gravity	Max.	Norm.	1	1	1	1	1	1	1	1	
14	Extra Conditions or Requirements			NONE		NONE		NONE		NONE		
	MEASURING ELEMENT			FE-313		FE-314		FE-317		FE-318		
15	Sensor Type			PADDLEWHEEL/ROTOR		PADDLEWHEEL/ROTOR		PADDLEWHEEL/ROTOR		PADDLEWHEEL/ROTOR		
16	Size and Type of Connection			2" STRAP-ON SADDLE		2" STRAP-ON SADDLE		4" STRAP-ON SADDLE		4" STRAP-ON SADDLE		
17	Temperature and Pressure Rating											
18	Rated Maximum - Minimum Flow Rate			20 FPS	1 FPS	20 FPS	1 FPS	20 FPS	1 FPS	20 FPS	1 FPS	
19	Accuracy			+/-2%		+/-2%		+/-2%		+/-2%		
20	Rotating Element Material			*		*		*		*		
21	Shaft Material			*		*		*		*		
22	Main Cover or Outer Housing			POLYPROPOLENE		POLYPROPOLENE		POLYPROPOLENE		POLYPROPOLENE		
23	Extra Features or Requirements			NONE		NONE		NONE		NONE		
	INDICATOR/TRANSMITTER			FIT-313		FIT-314		FIT-317		FIT-318		
24	Type of Register			FLOWRATE/TOTALIZER		FLOWRATE/TOTALIZER		FLOWRATE/TOTALIZER		FLOWRATE/TOTALIZER		
25	Output Signal (units)			4-20 mA		4-20 mA		4-20 mA		4-20 mA		
26	Calibrated Flow Range (units)			1/2" NPT		1/2" NPT		1/2" NPT		1/2" NPT		
27	Display Range - No. of Digits			10E8	6	10E8	6	10E8	6	10E8	6	
28	Enclosure Class			NEMA 4		NEMA 4		NEMA 4		NEMA 4		
29	Reset Required			YES		YES		YES		YES		
30	Conduit Conn. Size (units)			1/2" NPT		1/2" NPT		1/2" NPT		1/2" NPT		
31	Power Requirement / Elect. Code			120V, 60HZ	GENERAL	120V, 60HZ	GENERAL	120V, 60HZ	GENERAL	120V, 60HZ	GENERAL	
32	Alarms			NO		NO		NO		NO		
33	Extra Features or Requirements			NONE		NONE		NONE		NONE		

Notes:

1. "*" INFORMATION AND OR DATA TO BE FURNISHED BY VENDOR.

PARSONS Instrument Data Sheet	FLOWMETERS	Sheet 3	Job Number OU 1-07B NPTF
		Document Number 13400-ATTACHMENT A	Rev 0

MAGNETIC FLOWMETERS

	REQUISITION NO.			VENDOR									
1	Loop Tag No.			FE/FIT-319		FE/FIT-320							
2	Item No.												
3	Model No.			*		*							
4	Service			A-311 BYPASS FLOW LINE		A-310 BYPASS FLOW LINE							
5	Line No.												
6	P&ID No./Section			P-1		P-1							
	GENERAL SERVICE CONDITIONS												
7	Fluid			WATER		WATER							
8	Normal Flow (units)			75 GPM		75 GPM							
9	Flow (units)	Max.	Min.	150 GPM	20 GPM	150 GPM	20 GPM						
10	Temperature (units)	Max.	Min.	80 °F	50 °F	80 °F	50 °F						
11	Pressure (units)	Max.	Min.	Psig	0 Psig	Psig	0 Psig						
12	Velocity (units)	Max.	Min.	FPS	FPS	FPS	FPS						
13	Specific Gravity	Max.	Norm.	1	1	1	1						
14	Extra Conditions or Requirements			NONE		NONE							
	MEASURING ELEMENT			FE-319		FE-320							
15	Sensor Type			PADDLEWHEEL/ROTOR		PADDLEWHEEL/ROTOR							
16	Size and Type of Connection			2" STRAP-ON SADDLE		2" STRAP-ON SADDLE							
17	Temperature and Pressure Rating												
18	Rated Maximum - Minimum Flow Rate			20 FPS	1 FPS	20 FPS	1 FPS						
19	Accuracy			+/-2%		+/-2%							
20	Rotating Element Material			*		*							
21	Shaft Material			*		*							
22	Main Cover or Outer Housing			POLYPROPOLENE		POLYPROPOLENE							
23	Extra Features or Requirements			NONE		NONE							
	INDICATOR/TRANSMITTER			FIT-319		FIT-320							
24	Type of Register			FLOWRATE/TOTALIZER		FLOWRATE/TOTALIZER							
25	Output Signal (units)			4-20 mA		4-20 mA							
26	Calibrated Flow Range (units)			1/2" NPT		1/2" NPT							
27	Display Range - No. of Digits			10E8	6	10E8	6						
28	Enclosure Class			NEMA 4		NEMA 4							
29	Reset Required			YES		YES							
30	Conduit Conn. Size (units)			1/2" NPT		1/2" NPT							
31	Power Requirement / Elect. Code			120V, 60HZ	GENERAL	120V, 60HZ	GENERAL						
32	Alarms			NO		NO							
33	Extra Features or Requirements			NONE		NONE							

Notes:

1. "*" INFORMATION AND OR DATA TO BE FURNISHED BY VENDOR.

PARSONS Instrument Data Sheet	FLOWMETERS	Sheet 4	Job Number OU 1-07B NPTF
		Document Number 13400-ATTACHMENT A	Rev 0

REQUISITION NO.	VENDOR
Reference Specification Sheet No.	Model No.

1	Type:	X Indicating	___ Receiver				
		___ Other					
2	Mounting:	___ Surface	X Local	___ Flush			
3	Dial Diameter:	4 1/2 INCHES					
4	Dial Color:	___ Black	X White w/ Black Markings				
5	Case Material:	___ Cast Iron	___ Aluminum	X Phenol			
6	Ring Material:	X Screwed	___ Hinged	___ Slip			
7	Fill:	___ Liquid Filled	___ Glycerine Filled				
		___ Other					

8	Pressure Element:	X Bourdon	___ Bellows	
		___ Other		
9	Element Material:	___	X Steel	
	Type: ___	___ Stain. Steel	___ Other	___
10	Socket Material:	___ Bronze	X Steel	
	Type: ___	___ Stain. Steel	___ Other	___
11	Connection:	___ 1/4 - in.	X 1/2 - in.	
	(NPT)	X Bottom	___ Back	
12	Movement:	X Bronze	___ Stain. Steel	
		___ Nylon	___ Other	___
13	Blowout Disk	X Yes	___ No	

Rev	Tag No.	Item No.	P & ID No. and Section	Fluid	Range (psi) ADJ.	Range (psi) SET	Operating Pressure	Service	Line No.
	PI- 33	7	P-1	WATER		0-100	80	TAN-33 EXTRACTION FLOW LINE	SEE P&ID
	PI-38	9	P-1	WATER		0-100	80	TAN-38 EXTRACTION FLOW LINE	SEE P&ID
	PI-39	10	P-1	WATER		0-100	80	TAN-39 EXTRACTION FLOW LINE	SEE P&ID
	PI-40	11	P-1	WATER		0-100	80	TAN-40 EXTRACTION FLOW LINE	SEE P&ID
	PI-327	3	P-1	WATER		0-50	25	TRANSFER PUMP INFLUENT FLOW LINE	SEE P&ID
	PI-328	4	P-1	WATER		0-50	25	A-310 INFLUENT FLOW LINE	SEE P&ID
	PI-329	5	P-1	WATER		0-160	80	A-311 INFLUENT FLOW LINE	SEE P&ID
	PI-330	6	P-2	WATER		0-100	80	SYSTEM EFFLUENT FLOW LINE	SEE P&ID

NOTES:
1 LENS SHALL BE POLYCARBONATE.
2 MAXIMUM TEMPERATURE: 120 DEG F.
3 ACCURACY SHALL BE +/- 2% OF FULL SCALE.
4 PROVIDE WITH 1/2" FNPT BOTTOM CONNECTION, AND SNUBBER.

PARSONS		Sheet	Job No.
INSTRUMENT DATA SHEET	PRESSURE INSTRUMENT	5	OU 1-07B NPTF
		Document Number: 13400-ATTACHMENT A	Rev: 0

ENG 031

REQUISITION NO.	VENDOR
Reference Specification Sheet No.	Model No.

1	Type:	X Indicating		Receiver	8	Pressure Element:	X Bourdon		Bellows
			Other					Other	
2	Mounting:		Surface	X Local		Flush	9	Element Material:		X Steel
3	Dial Diameter:	4 1/2 INCHES						Type:	Stain. Steel	Other
4	Dial Color:		Black	X White w/ Black Markings	10	Socket Material:	Bronze	X Steel	
						Type:	Stain. Steel	Other	
5	Case Material:		Cast Iron	Aluminum	X Phenol	11	Connection:	1/4 - in.	X 1/2 - in.
						(NPT)	X Bottom	Back	
6	Ring Material:	X Screwed		Hinged	Slip	12	Movement:	X Bronze	Stain. Steel
7	Fill:		Liquid Filled	Glycerine Filled			Nylon	Other	
			Other			13	Blowout Disk	X Yes	No

Rev	Tag No.	Item No.	P & ID No. and Section	Fluid	Range (in. wc.) ADJ.	Range (in. wc.) SET	Operating Pressure	Service	Line No.
	PI-323	1	P-2	AIR	0-40		22	A-311 INFLUENT AIR	SEE P&ID
	PI-324	2	P-2	AIR	0-40		22	A-310 INFLUENT AIR	SEE P&ID
	PSL-323	3	P-2	AIR	0-40	16	22	A-311 INFLUENT AIR	SEE P&ID
	PSH-323	4	P-2	AIR	0-40	28	22	A-311 INFLUENT AIR	SEE P&ID
	PSL-324	5	P-2	AIR	0-40	16	22	A-310 INFLUENT AIR	SEE P&ID
	PSH-324	6	P-2	AIR	0-40	28	22	A-310 INFLUENT AIR	SEE P&ID
	FI-331 (NOTE 5)	7	P-2	AIR	0-4		22	A-311 INFLUENT AIR	SEE P&ID
	FI-332	8	P-2	AIR	0-4		22	A-310 INFLUENT AIR	SEE P&ID

NOTES:

1 LENS SHALL BE POLYCARBONATE.
2 MAXIMUM TEMPERATURE: 120 DEG F.
3 ACCURACY SHALL BE +/- 2% OF FULL SCALE.
4 PROVIDE WITH 1/2" FNPT BOTTOM CONNECTION, AND SNUBBER.
5 FLOW INDICATOR USING DIFFERENTIAL PRESSURE GAUGE WITH PITOT TUBE.

PARSONS	PRESSURE INSTRUMENT	Sheet 6	Job No. OU 1-076 NPTF
INSTRUMENT DATA SHEET		Document Number 13400-ATTACHMENT A	Rev 0

BNO (B)

	REQUISITION NO.		VENDOR					
1	Tag No.		LT-307		LT-308		LT-309	
2	Item No.							
3	Model No.		*		*		*	
4	Service		SURGE TANK		AIR STRIPPER		AIR STRIPPER	
5	Vessel or Equipment No.		T-300		A-310		A-311	
6	Line No.							
7	P&ID No.		P-1		P-2		P-2	
	SERVICE CONDITIONS							
8	Fluid		WATER		WATER		WATER	
9	Press Max	Norm	10 PSI	ATM	10 PSI	ATM	10 PSI	ATM
10	Temp Max °F	Norm °F	80	55	80	55	80	55
11	sp gr @ 60 °F	@ Opr Temp	1	1	1	1	1	1
12	Tank Height		9 FT		4 FT		4 FT	
13	Max Range		9 FT		4 FT		4 FT	
14								
	BODY/TRANSMITTER							
15	Type		ULTRASONIC		ULTRASONIC		ULTRASONIC	
16	Material		POLYPROPYLENE		POLYPROPYLENE		POLYPROPYLENE	
17	Mounting Connections		2" NPT		2"NPT		2"NPT	
18	Conduit Connections		1/2" NPT		1/2" NPT		1/2" NPT	
19	Orientation		1		2		2	
20	Min. Range	Max. Range	0.5 FT	18 FT	0.5 FT	18 FT	0.5 FT	18 FT
21	Resolution		0.125 IN.		0.125 IN.		0.125 IN.	
22	Pulse Rate		2 PER SECOND		2 PER SECOND		2 PER SECOND	
23	Supply Voltage		12-36 VDC		12-36 VDC		12-36 VDC	
24	Signal Output		4 - 20 mA		4 - 20 mA		4 - 20 mA	
25	Max. Deadband		<0.5 FT		<0.5 FT		<0.5 FT	
26	Accuracy		+/- 0.5%		+/- 0.5%		+/- 0.5%	
27	Display		DIGITAL		DIGITAL		DIGITAL	
28								
	ACCESSORIES							
29	Filter and Regulator							
30	Gauge Glass		N/A		2" CLEAR		2" CLEAR	
31	Gauge Connections		1"		1"		1"	
32	Controller							
39	Switches							
40								
41								
42								
43								

ORIENTATION

1

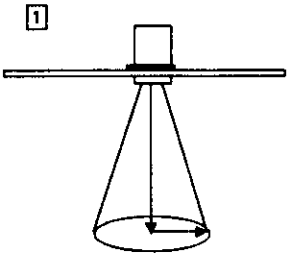

2

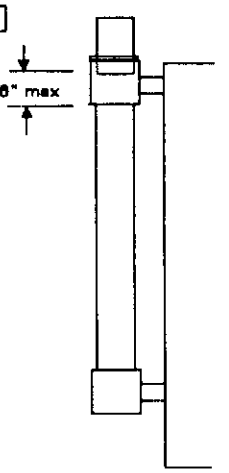

Notes:

1. "*" Flowline Ultrasonic Level Transmitter Model # LU20-5003.

PARSONS Instrument Data Sheet	LEVEL TRANSMITTER	Sheet 7	Job Number OU 1-07B NPTF	
		Document Number 13400-ATTACHMENT A		Rev 0

	REQUISITION NO.					VENDOR			
1	Tag No.			LEL-33, 38, 39, 40, LEH-IW		LEH-33, 38, 39, 40, 399		LSH-306, LSL-306, LSHH-321, LSHH-322	
2	Item No.								
3	Model No.			(Note 1)		(Note 2)		(Note 3)	
4	Service			EXTRACTION WELL		WELL HOUSE/SUMP		SURGE TANK AIR STRIPPER	
				LOW LEVEL		LEAK DETECTION		HIGH / LOW LEVEL	
5	P&ID No.			P-1		P-1		P-1	
	SERVICE CONDITIONS								
6	Upper Fluid			WATER		WATER		WATER	
7	Sp GR @ Opr Temp:	Upper	Lower	1	-	1	-	1	-
8	Pressure (psig)	Max	Normal	ATM	ATM	ATM	ATM	ATM	ATM
9	Temperature °F	Max	Min	90 °F	50 °F	120 °F	20 °F	90 °F	50 °F
10									
	BODY / ELEMENT								
11	Type			PRESSURE TRANS.		FLOAT		CAPACITANCE	
12	Material: Stem/Mounting			STAINLESS STEEL		STAINLESS STEEL		POLYPROPYLENE	
13	Material: Float					BUNA-N			
14	Material: Other Wetted Parts					(Note 5)		POLYPROPYLENE	
15	Connection Size and Rating			N/A		N/A		3/4" NPT SCHD. 40	
16	Drain Connections Size and Rating			N/A		N/A		N/A	
17	Input Power					120 VAC, 1 phase, 60 Hz.		120 VAC, 1 phase, 60 Hz.	
18	Stress Relieving Required			NO		NO		NO	
19									
20									
	SWITCH								
21	Type			DRY CONTACT		DRY CONTACT		DRY CONTACT	
22	Enclosure			NEMA 4		NEMA 4		NEMA 4	
23	Conduit Connection and Size							1/2" NPT	
24	Switch Mode:					NO or NC, SPST		NO or NC, SPDT	
25	Rating:	Volts	Hertz or DC			120	60 HZ	250	60 HZ
26	Rating:	Amps	Watts	5	-	5	-	10	-
27	Differential	Fixed	Adjustable	NO	YES	YES	NO	YES	NO
28	Adjustment	Internal	External	NO	YES	-	-	-	-
29	Contacts	Open or Close	On Level / Increase or Decrease	OPEN ON LEVEL DECREASE		OPEN ON LEVEL INCREASE		CLOSE ON LEVEL DECREASE	
30	Actuates			PLC - EXTRACTION PUMP		PLC - SHUTDOWN		PLC - SHUTDOWN	
31	Booster Relay Switch					YES		NO	
32	Booster Relay Tag No.					LSH-33, 36, 38, 39, 40, 399			
33	Model No.					(Note 4)			
34	Load VAC:	Min.	Max.			24	260		
35	Sensor Current					20 mA			
36	Switching Mode					NO SPST			
37									
38									

Notes:

1. SPECIFIC MANUFACTURER AND MODEL IS TBD.
2. GEMS LS-270 SERIES, PART NUMBER 43760.
3. FLOWLINE SWITCH PRO CAPACITANCE LEVEL SWITCH MODEL NUMBER AS13-1120.
4. GEMS LOAD PAK PART NUMBER 20173.
5. OTHER WETTED PARTS SHALL BE VITON, TFE, RYLON, BERYLLIUM, COPPER, NICKEL OR POLYCARBONATE.

PARSONS INSTRUMENT DATA SHEET	LEVEL SWITCHES	Sheet 8	Job Number OU 1-07B NPTF
		Document Number 13400-ATTACHMENT A	Rev 0

27-Apr-99

REQUISITION NO.	VENDOR	PLC Direct
	Model No.	PLC Direct DL-205 PLC System

GENERAL

1 Description: ___ Recorder X Indicator X Controller
___ Manual Control Station ___ Trend Recorder
X Computer Control Station
Other ___

2 Interface: X PC X Remote
X Control Panel ___ Data Communications.

4 Mounting MAIN CONTROL PANEL - INSIDE
5
6 Volts / Hz : 120 VAC, 60HZ from MCC-300
7 Other : DUAL RACK CONFIGURATION
8
9
10
11
12

INPUTS

29 X Analog Current: 4-20 mA Voltage: 24 VDC
30 ___ DC Operating Voltage:
31 X AC Operating Voltage: 120 VAC 60 Hz
32
33

OUTPUTS

34
35 X Analog Current: 4-20 mA Voltage: 24 VDC
36 ___ DC Operating Voltage:
37 ___ AC Operating Voltage:
38 X Relay Operating Voltage: 120 VAC 60 Hz
39

ACCESSORIES

40
41 Man Machine Interface: ProgrammableTouch Control Panel
42
43 Alarm :
44 Number :
45 Actuation: ___ Internal ___ External
46 Electrical Requirements :
47 Other :
48 X Computer Access Interface
49 Other: RS232 PORT FOR COMPUTER ACCESS
50 CAPABILITY TO DOWNLOAD PLC SOFTWARE FROM PC

CPU

15	Total Memory (words):	14.8K
16	Virtual Memory (words):	7168
17	Battery Backup:	YES
18	Total I/O Points:	1024
19	Max. Input Points:	512
20	Max. Output Points:	512
21	Remote I.O Available:	YES
22	Contact Execution Time:	6.61 uS
23	Typical Scan Time:	1 - 2 mS
24	Real Time Clock/Calendar:	YES
25	Other:	
26		
27		
28		

Configuration:

BASE 1	D2-06B 120VAC POWERED BASE W/ 24VDC POWER SUPPLY	BASE 1	D2-06B 120VAC POWERED BASE W/ 24VDC POWER SUPPLY
SLOT 0	D2-250 CPU	SLOT 0	D2-RSSS REMOTE SLAVE I/O MODULE
SLOT 1	D2-RMSM REMOTE MASTER I/O MODULE	SLOT 1	D2-16NA 80-132 VAC INPUT
SLOT 2	F2-08AD-1 8 CHANNEL 4-20 mA ANALOG INPUT	SLOT 2	D2-16NA 80-132 VAC INPUT
SLOT 3	F2-08AD-1 8 CHANNEL 4-20 mA ANALOG INPUT	SLOT 3	D2-16NA 80-132 VAC INPUT
SLOT 4	F2-02DA-1 2 CHANNEL 4-20 mA ANALOG OUTPUT	SLOT 4	F2-08TRS RELAY OUTPUT
SLOT 5	F2-02DA-1 2 CHANNEL 4-20 mA ANALOG OUTPUT	SLOT 5	F2-08TRS RELAY OUTPUT

DISPLAY PANEL: DP-C320 COLOR TOUCH PANEL W/ 5.7" DISPLAY

Notes:

PARSONS	PROGRAMMABLE LOGIC CONTROLLER	Sheet 9	Job No. OU 1-07B NPTF
INSTRUMENT DATA SHEET		Document Number 13400-ATTACHMENT A	Rev. 0

Project Title: OU 1-07B New Pump and Treat Facility
Project File: _____ A-ECS Number: _____
Project Number: _____ Subcontract Number: _____
Rev. 0 – 4/22/99

SECTION 15025-- WELDING

PART 1--GENERAL

WORK DESCRIPTION:

The Subcontractor shall furnish all labor, materials, equipment and services necessary to perform all structural and pressure piping welding required in accordance with the Subcontract drawings and the following specifications.

Design, testing, inspection, filler materials and workmanship requirements shall conform to the appropriate code.

WORK INCLUDED: Work includes, but is not limited to:

Structural welding
Pipe support welding
Pipe welding
Integral attachments to piping and equipment including other pressure boundary welds.
Brazing

RELATED SECTIONS :

Section 05100 – Structural Steel and Miscellaneous Metals
Section 13120 – Metal Building Systems
Section 13121 – Portable Buildings
Section 15401 – Underground Process Piping
Section 15404 – Piping and Plumbing

QUALITY CONTROL:

Codes and Standards: Comply with requirements of the current revision of the following codes and standards, as specified in this specification:

AMERICAN INSTITUTE OF STEEL CONSTRUCTION (AISC)

AISC (ASD) Specification for Structural Steel Buildings - Allowable Stress Design (ASD) and Plastic Design

AMERICAN NATIONAL STANDARDS INSTITUTE (ANSI)

ANSI Z49.1	Safety in Welding and Cutting

AMERICAN SOCIETY FOR NONDESTRUCTIVE TESTING (ASNT)

ASNT SNT-TC-1A	Personnel Qualifications and Certification in Nondestructive Testing.

AMERICAN WELDING SOCIETY (AWS)

AWS A2.4	Symbols for Welding and Nondestructive Testing
AWS A3.0	Welding Terms and Definitions
AWS D1.1	Structural Welding Code-Steel
AWS QCI	AWS Standard for Qualification and Certification of Welding Inspectors

AMERICAN SOCIETY OF MECHANICAL ENGINEERS (ASME)

Boiler and Pressure Vessel Code (BPV)

Section II	Material Specifications, Part C
Section V	Nondestructive Examination
Section IX	Welding and Brazing Qualifications
ASME B31.3	Chemical Plant and Petroleum Refinery Piping

IDAHO NATIONAL ENGINEERING LABORATORY (INEL)

INEL Welding Manual.

Weld Procedure Qualification:

Off-Site Procedures: Except for structural welding procedures prequalified per AWS D1.1, the Subcontractor shall establish and qualify Weld Procedure Specifications (WPS) for any off-site welding performed during this Subcontract. Qualification of piping welding procedures shall be in accordance with the requirements of ASME BPV Code, Section IX. Approval will not relieve the Subcontractor of the sole responsibility for preparing procedures in accordance with the above referenced specifications.

The Subcontractor may use welding procedures from the INEL Welding Manual listed in PART 3 Welding Processes paragraph for off-site welding if a letter is submitted as vendor data stating that these procedures are being adopted for use in performance of this subcontract.

On-Site Procedures: Welding procedures from the INEL Welding Manual listed in PART 3 Welding Processes paragraph shall be used for on-site structural and pipe welding.

Welder Qualification:

Off-Site: Off-site welding shall be performed by welders or operators qualified in accordance with AWS D1.1 for structural and pipe support welding and ASME BPV Code, Section IX for pipe and pipe attachment welding. Welders or welding operators qualified to INEL Welding Manual procedures can be used for off-site welding if the applicable INEL weld procedures are identified and submitted as Vendor Data. When using INEL Welding Manual procedures for off-site welding, welders shall be qualified at the INEL Welder Test Facility.

On-Site: All on-site welding performed under this specification shall be performed by welders or welding operators qualified at the INEL Welder Test Facility using the applicable procedures specified from the INEL Welding Manual.

Certification: Upon successful completion of the qualification test, the welder shall be provided with a certificate card by the Subcontractor (off-site) or in compliance with the INEL Welding Manual (on-site). The certificate shall state the welding process, codes, and procedures under which the welder is qualified, and individual who issued the certificate. The welder shall carry the certificate card when performing welding under this contract. The Subcontractor shall have on file documentation, affidavits, and records of testing and test results which qualified the welder for certification. These records shall be certified by the Subcontractor and shall be submitted to the Contractor as vendor data.

Welder's Identification: The Subcontractor shall assign each welder with an identifying number, letter, or symbol which shall be used by the welder to identify all piping or pipe attachment welds made by him. Structural welding does not require welder identification of welds.

Renewal of Qualification: Renewal of qualifications for a welder or welding operator working on-site shall be in accordance with the INEL Welding Manual. Renewal of qualifications of a welder or welding operator working off-site shall be as required in ASME BPV Code, Section IX.

Nondestructive Examination Procedures: The Subcontractor shall establish detailed inspection procedures and acceptance criteria for each nondestructive examination required in accordance with the requirements

specified in PART 3 EXECUTION - QUALITY CONTROL AND TESTING and additionally as required to ensure conformance of the work to the contractual requirements.

Subcontractor's Nondestructive Examination Personnel Qualifications: The Subcontractor's nondestructive examination (including visual examination) personnel shall be qualified for the applicable nondestructive testing method in accordance with the requirements of ASNT SNT-TC-1A for Levels I, II, or III as applicable. Qualification as an AWS Certified Weld Inspector is an acceptable alternative for visual examination. The Subcontractor shall have on file documentation, affidavits, and records of testing and test results which qualified the nondestructive examination personnel. These records of education, training and experience to validate qualification shall be submitted as vendor data.

SUBMITTALS:

Submittals for review :

1. Handling, storage, and control procedures for filler materials and backing material.
2. Cleaning procedures for stainless steel (if SST is used).
3. Welding procedures and procedure qualification reports performed in accordance with ASME BPV Code, Section IX for off-site welding including a list of procedures selected for use from the INEL Welding Manual.
4. Subcontractor's nondestructive examination procedures.
5. Subcontractor's identification and control procedures for tools and equipment.
6. Detailed weld repair procedures.
7. Purge dam control procedure which shall include the prohibition of dissolvable purge dam material for pneumatically flushed piping systems and include methods to assure removal of all purge dams.
8. Shop drawings for building structural welding shall show all welds, size, preparation, etc. The drawings shall differentiate between shop and field welds.

Submittals for information:

1. Welding personnel qualification records.
2. Subcontractor's nondestructive examination personnel qualification records.
3. Certificates of conformance for weld filler materials

Submittals for project-closeout:

1. Weld repair reports including weld identification, welder identification number, test procedure, reason for rejection, number of repairs required, and documentation that weld is repaired and accepted.
2. An isometric pipe weld map which shall include the following information: weld procedure specification,

NDE requirements and unique identification number including welders identification and completion date.

3. Weld inspection reports.

DEFINITIONS AND SYMBOLS:

Definitions for welding terms shall be in accordance with AWS A3.0 and ASME Section IX as applicable. Weld symbols shall be in accordance with AWS A2.4, unless otherwise indicated.

SAFETY:

As a minimum, safety precautions during welding shall conform to ANSI Z49.1 as well as any additional requirements specified in the subcontract documents.

DELIVERY, STORAGE, AND HANDLING:

Except as otherwise specified, filler materials and fluxes shall be stored and handled in accordance with Manufacturer's Recommendations and approved procedures (off-site) or the INEL Welding Manual Volume 2 (on-site).

PART 2--PRODUCTS

GENERAL:

Welding equipment, electrodes, filler material, and fluxes shall be capable of producing satisfactory welds when used by a qualified welder or welding operator utilizing qualified welding procedures.

MATERIALS:

Filler Material: All filler material used in fabrication shall comply with the applicable requirements of ASME BPV Code, Section II, Part C or the equivalent AWS filler material specification and shall have a certificate of conformance.

Magnetic Particle: All magnetic particle examination materials and equipment shall meet the requirements of ASME Section V, Article 25, SE-709, Paragraphs 5 and 6.

PART 3--EXECUTION

WELDING OPERATIONS:

Both off-site and on-site welding shall be accomplished in accordance with the qualified and approved welding procedures using qualified welders and/or welding operators. The use of such procedures will not relieve the Subcontractor of his responsibility for producing weldments conforming to the specified workmanship requirements. Welding shall not be done when the quality of the completed weld could be impaired by the prevailing working or weather conditions.

Welding Processes:

Off-Site: Subject to approval of the Subcontractor's welding procedures.
Other welding processes may be used subject to specific approval. The Subcontractor shall submit pertinent data and proposed application of said other welding processes for evaluation by the Contractor prior to performing weld procedure qualification.

On-Site and Offsite Using INEL Welding Manual:

Carbon Steel Tubular Sections, Plate and Structural Shapes: Welding shall be done in accordance with the "INEEL Welding Manual" and the applicable INEEL Welding Procedures C-3.5, C-6.9 or C-6.10.

Carbon Steel Pipe Welding Procedures: All welding shall be in accordance with ANSI B31.3 and the INEL Welding Procedures C3.0, C8.0 and C6.8

Tools and Equipment: Tools and equipment used in the fabrication of stainless steel and nickel based alloys shall be free from corrosion and shall be maintained free of grease, carbon steel particles, or any other foreign matter detrimental to fabrication. Mechanical cleaning tools used for stainless steel shall not cause carbon steel to be embedded into the surface. Wire brush material shall be of a material compatible with the parent material. Grinding wheels shall be resin bonded. Metal removal tools, wire brushes, and grinding wheels shall not have been previously used for other than the parent material. The Subcontractor shall establish and maintain identification and control procedures for equipment and tools including wire brushes and grinding wheels.

Joint Preparation and Fitup: Joint preparation including end preparation and alignment shall conform to the requirements of the applicable ASME code or the INEL Weld Manual and to the following minimum requirements. Surfaces within 2 in. of any weld location shall be free of any oil, grease, paint, or other material that would prevent proper welding or produce objectionable fumes while welding. There shall be no free iron on the weld bead or heat-affected area of any stainless steel weld, nor on any surface where mechanical cleaning abrasion or other working of the metal surface has occurred. If the joints of carbon steel are prepared by arc cutting, the surface shall be ground to bright metal by mechanical means before

welding. Plasma arc or laser beam cutting of austenitic stainless steel is permitted provided the cut surface is machined or ground a minimum of 1/16 in. to bright metal.

Piping prepared for use with socket weld fittings shall have ends ground smooth, square and flat, with no perceptible burrs or irregularities. When performing automatic pipe welding the pipe end preparation shall be made with tooling making the proper 90° end cut and the proper counterbore.

Pipe shall be cut accurately to measurements shown on the drawings and/or to suit field conditions. It is the responsibility of the subcontractor to field verify dimensions indicated on drawings prior to fabrication. A template shall be used in laying out headers, laterals and other irregular details to ensure accurate cutting and a proper fit-up.

Cleaning Stainless Steel: The weld joint and surrounding metal for at least 2 in. back form the joint preparation shall be cleaned before welding. Cleaning shall be accomplished by brushing with a clean stainless steel brush and by scrubbing with a clean lint free cloth moistened with an approved low (less than 35 ppm) chloride or chloride-free solvent. When the weld has cooled, remove all visible weld spatter, arc-strikes, flux, and scale, however, the base material thickness shall not be compromised. Stainless steels shall not be descaled with nitric-hydrofluoric acid solutions. Final cleaning shall be performed after inspection and when destructive testing is complete.

Preheat and Interpass Temperature Requirement: Preheat and interpass temperature shall be in accordance with the welding procedure specification.

Welding Requirements:

General: Welds shall be designed to provide complete fusion with the base metal. Pressure retaining groove welds shall be complete joint penetration welds unless otherwise specified. Weld beads shall be contoured to provide complete fusion at the sides of the bevel and to prevent slag entrapment. Flux, weld spatter and slag shall be removed from each weld bead prior to depositing the succeeding pass. Arc strikes outside the area of permanent welds shall be avoided on base metal. Welds shall be finished as required for the applicable nondestructive examination method. Accessible welds on the inside surface of vessels prior to final closure shall be ground smooth and free of pits, crevices and sharp projections. Peening shall not be allowed.

Consumable Inserts: The use of consumable inserts shall only be permitted with prior approval of the Contractor.

Structural Attachments: Permanent structural attachments shall not be welded to pressure retaining parts unless such attachment is specifically specified, indicated or approved by the Design Engineer. Such

welds shall be inspected by the liquid penetrant method or magnetic particle method as specified. Welding shall not be performed after final stress relief and/or hydrostatic testing.

Tack Welds and Temporary Welds: Qualified procedures and welders shall be used to make tack welds and to weld temporary attachments. Tack welds shall be inspected visually for defects and, if found to be defective, shall be removed. Areas from which temporary attachments have been removed shall be dressed smooth and inspected visually for conformance with the minimum thickness requirements of the parent metal, and shall be examined by the liquid penetrant method or magnetic particle method as specified. Welds found to be defective shall be repaired by a qualified welder and re-examined.

Post Weld Heat Treatment: Post weld heat treatment shall be as indicated and in conformance with the applicable ASME code requirements or WPS.

Welding Sequence: Welds that are located under nozzle necks, external reinforcement or other obstructions shall be inspected and nondestructively examined prior to attachment of the obstruction. Welded joints connecting new piping or equipment to existing piping or equipment shall be made only after new piping or equipment has been successfully tested and cleaned.

Identification of Welds: The welder shall permanently affix his assigned identification mark and applicable weld identification number adjacent to the weld using a vibro-etch tool. The welder shall also record this information on the weld map.

QUALITY CONTROL AND TESTING:

Inspections, examinations, and tests for welds and weldments shall be performed by qualified inspection, examination, and testing personnel in accordance with the approved procedures. All welds are subject to inspection by the Contractor's Representative who reserves the right to accept, reject or demand removal of welds which are in violation of this specification or the applicable welding procedure specification. The Subcontractor shall provide access for this activity.

The Subcontractor shall coordinate the performance of non-destructive examinations with the fabrication and installation of the piping systems, so as to minimize interferences in the performance of both scopes of work and other unrelated work.

Weld Testing and Inspections:

Piping welding examination required : The contractor will provide all visual and magnetic particle examination and inspection. Examination and inspection of pipe welds shall be per ASME B31.3 (normal service conditions) para 341.4.1(a). In-process examination in accordance with para 341.4.1(b) shall be substituted for all radiographic examination. 100% of welds shall be magnetic particle examined. All piping welds shall be visually inspected prior to LP or MP examination. Visual acceptance criteria shall be in accordance with ANSI B31.3, Table 341.3.2A, Normal Service. Acceptance standards for magnetic particle examination shall be in accordance with the following; Welds shall be free of cracks. All relevant indications greater than 1/16" shall be repaired. Pipe hanger welding shall be visually examined.

Structural welding examination required: All welds shall be visually examined. The contractor's representatives may be used for off-site shop visual examinations if the subcontractor pays for this service.

FIELD QUALITY CONTROL:

Surveillance will be performed by the Contractor's Representative to verify compliance of the work to the drawings and specifications.

END OF SECTION 15025

Project Title: New Pump and Treat Facility
Project File: _____ A-ECS Number: _____
Project Number: _____ Subcontract Number: _____
Rev. 0 - Initial Specification 3/16/99

SECTION 15401--UNDERGROUND PROCESS PIPING

PART 1--GENERAL

SUMMARY:

The Subcontractor shall furnish and install all equipment, materials and supplies and perform all work and operations necessary for furnishing and installing the underground piping and plumbing systems and appurtenances to complete the work as shown on the subcontract drawings and specified herein. Upon completing installation of the piping systems, the Subcontractor shall operate and test as specified hereinafter to verify that the systems are properly installed and operate as required.

Section Includes: Work includes, but is not limited to:

Furnish and install all underground pipe, fittings, insulation, and manhole as required to complete the work as shown on the subcontract drawings for the following systems:

Double wall contaminated well water (CWW) piping

SUBMITTALS:

Submittals for review:
Provide catalog cuts and installation instructions for protective coatings and pipe wrapping for approval before use.
Provide catalog cuts for Precast manhole sections for approval before use.
Provide catalog cuts for locator ribbon for approval before use.
Pressure test procedures and pipe flushing procedures for approval before use.

Submittals for information:
Certificates of Compliance for all pressure retaining components to be submitted for information before use.

Submittals for project close-out:
Pressure test and flushing procedure reports

QUALITY CONTROL:

Qualifications: Underground piping shall be furnished and installed by a firm qualified, accredited and regularly engaged in this type of work, and shall maintain shop and facilities for fabrication and maintenance of subject equipment.

Items of Any One Classification: Items which are used in quantity, such as valves, specialties, accessories, fittings, etc., shall in each case be the product of one manufacturer, and shall be used only for the services recommended by the manufacturer.

Materials, Products and Equipment: Materials, products and equipment shall be first quality and be furnished and installed in strict accordance with the subcontract drawings and these specifications.

Welding : Welding, Weld examination required, Weld procedure Qualification, Welder Qualifications, NDE of welds etc. shall be in accordance with Welding Specification 15025.

MATERIAL DELIVERY, STORAGE AND HANDLING:

Delivery: Subcontractor shall ensure that all materials are delivered in a new, undamaged and protected condition.

Receiving Inspection: Each shipment shall be inspected by the Subcontractor prior to acceptance. If damage is found or any material, identification, and/or documentation is missing, this fact shall be promptly reported to the delivering carrier(s), the manufacturer and the Construction Engineer or representative.

Storage and Handling: Materials shall be resealed and repacked after inspection, and shall be stored in its original protective packing, or its equivalent. The Subcontractor shall ensure that materials are stored in a manner to provide protection against damage, atmospheric corrosion and contamination.

PART 2--PRODUCTS

GENERAL:

All materials, products and equipment shall be as manufactured by the manufacturer specified in this section, or approved equal.

PIPE AND FITTINGS:

Underground Contaminated Well Water piping: The following materials shall be used for underground CWW pipeline installation as shown on the subcontract drawings:

Piping: Underground CWW piping shall be welded or seamless carbon steel Schedule 40 per ASTM A106, Gr B.

Fittings: Fittings shall be Schedule 40 carbon steel with butt weld ends per ASTM A234, Gr B. 90° Ells

for the outer pipe shall be short radius. 90° Ells for the inner pipe shall be long radius.

Protective coatings:
Underground carbon steel piping shall be wrapped with polyken 920 20-mil wrap manufactured by Kendall Polyken, Mansfield, MA or approved equal and be coated with the manufacturer's standard asphaltic coating or equivalent. Wrapping to be completed per manufacturer's instructions with a minimum of 50% overlap.

Pipeline coatings shall be inspected by the subcontractor with the use of a holiday detector. Performance of this holiday test shall be in accordance with NACE Standard RP-0274. Subcontractor shall repair all defects. The Contractor's Representative shall witness the testing.

Cathodic Protection:
All underground piping shall be protected with cathodic protection. See Section 16640 of this specification for Cathodic Protection System.

Manhole :
Precast manhole sections shall be designed to meet ASTM C478 and provided as shown on the drawings. The manhole and rubber boots for piping entering manhole shall be as manufactured by Amcor Co. or approved equal.

PART 3--EXECUTION

INSTALLATION OF ALL SYSTEMS:

General: Shall be in conformity with the applicable requirements of the ASME Code for Chemical Plant and Petroleum Refinery Piping. (ASME B31.3), and the Uniform Plumbing Code.

PIPELINES AND MANHOLE:

Underground Pipelines and Manhole: Bedding, placement and backfilling for underground pipelines and manholes shall be as specified in specification section 02200, *Earthwork*.

In addition, Install pipe to uniform pitches between points for which elevations are established. Use level or other approved method to accomplish this. Provide bends or elbows for changes in directions. Fabricated elbows shall not be used. Where odd angle bends are required elbow fittings shall be trimmed to the proper angle. Between bends or elbows, lines shall be straight and free from irregularities

Joints shall be made accessible for inspection and repair during weld inspection, pressure testing and

prior to backfilling.

Underground Pipelines Seperation :

Potable water lines includes potable water (PW)and fire water(FW). Utility lines includes treated water (TW). Process lines shall include Contaminated Well Water(CWW) and all other process, waste, and sanitary lines.

Potable water / Fire Water lines shall be separated from other lines horizontally and vertically as specified below:

Potable water/Fire Water shall be separated from utility lines by a minimum of 12 in. horizontally (inside wall to wall), and a minimum of 12 in. above vertically (top of utility pipe to bottom of potable water pipe).

Potable water/Fire Water lines shall be separated from process lines by a minimum of 10 ft. horizontally, or; separated by 6 ft. horizontally and 18 in. vertically and the process line shall be constructed as a minimum to the requirements of the water line, or encased in 4" minimum of concrete all around, or double encased in welded Sch. 40 CS or polyethylene pipe sealed at both ends.

Where potable water/fire water and process piping cross, the pipes shall be separated as specified below:

The potable water/fire water line shall be separated from process lines by a minimum of 18 in. vertically (top of process pipe to bottom of potable water pipe).

The water line shall be centered so that the joints will be equal distance and as far as possible from the crossed line.

The process line shall be constructed as a minimum to the requirements of the water line, or either line shall be encased in 4" minimum of concrete all around, or double encased in welded Sch. 40 CS or polyethylene pipe sealed at both ends for 10 ft. on both sides of the crossing.

At any point where a process pipe crosses above the water pipe, the process pipe shall be supported to prevent settling.

Flushing and Pressure testing:

Flushing and pressure testing shall be in accordance with Piping and Plumbing Specification 15404.

Sterilization and sampling of potable water :

Sterilization and sampling of potable water shall be in accordance with Underground Fire Water Piping Specification 15505.

FIELD QUALITY CONTROL:

Surveillance will be performed by Contractor's Representative to verify compliance of the work to the drawings and specifications.

END OF SECTION 15401

SECTION 15404 - PIPING AND PLUMBING

PART 1 - GENERAL

WORK DESCRIPTION:

The Subcontractor shall furnish and install all equipment, materials and supplies and perform all work and operations necessary to install the piping systems and appurtenances and to complete the work as shown on the subcontract drawings and specified herein. Upon completing installation of the piping systems, the Subcontractor shall test as specified herein to verify that the systems are properly installed as required.

The Subcontractor shall field verify all piping dimensions, prior to fabrication and shall maximize shop fabrication of spool pieces in order to minimize field work time.

Where instruments, valves, equipment or controls are specified, the descriptive narrative shall govern over the catalog part number or model number.

WORK INCLUDED: Work includes, but is not limited to:

> Furnish and install all valves, valve tags, tubing, instruments, gages, mounting brackets, pipe, flanges, fittings, couplings, strainers, hangers, supports, insulation, and appurtenances as required to complete the work as shown on the subcontract drawings for the piping and instrumentation within the New Pump and Treat Facility Building and yard piping including tie-ins to existing pipe lines, insulation and sleeper supports. Work includes all pipe welding and pipe support welding. Yard piping also includes all double wall piping to wells, potable water piping, well "down hole" piping, etc. unless noted "by others" as shown on the drawings. Work includes all cleaning, testing, and flushing of the piping systems as specified herein.

RELATED SECTIONS:

Section 09900 – Painting
Section 15025 – Welding

QUALITY CONTROL:

Codes and Standards: Comply with requirements of the current revision of the following codes and standards, as specified in this specification:

AMERICAN SOCIETY OF MECHANICAL ENGINEERS (ASME)
ASME B31.3 Chemical Plant and Petroleum Refinery Piping

Qualifications: Piping and plumbing shall be furnished and installed by a firm qualified, accredited and regularly engaged in this type of work, and shall maintain shop and facilities for fabrication and maintenance of subject equipment.

Items of Any One Classification: Items which are used in quantity, such as valves, specialties, accessories, fittings, etc., shall in each case be the product of one manufacturer, and shall be used only for the services recommended by the manufacturer.

Materials, Products and Equipment: Materials, products and equipment shall be first quality and be furnished and installed in strict accordance with the subcontract drawings and these specifications.

Certificates of Compliance: Certificates of compliance shall be submitted for any material used in pressure containing piping components and shall state that the material conforms to the specification listed under "Piping Materials". Unlisted materials may be used provided contractor approval is obtained prior to fabrication. Certificates of compliance for all weld filler materials shall be submitted as vendor data. Materials of unknown specification shall not be used for pressure containing piping components.

Welding and weld examination: Welding and examination of all double wall and other pressure piping and pipe supports shall be performed in accordance with Specification section 15025

SUBMITTALS:

Submittals for review:

1. Catalog cuts and product data for all valves, pumps, instruments, tanks, specialty items, etc. are required to be submitted and approved by the contractor before purchase.
2. Product data for pipe insulation, insulation jacketing and installation instructions to be approved by the contractor before purchase.
3. Thermoplastic piping (PVC) bonding procedure test assembly results and performance qualifications for each bonder.
4. Pressure test procedures and pipe flushing procedures
5. Sterilization procedure for potable water piping.

Submittals for information :

1. Certificates of Compliance for all pressure retaining components are to be submitted for information before

use.

Submittals for project-closeout:

1. All pneumatic and hydrostatic test reports

PART 2--PRODUCTS

GENERAL:

All materials, products and equipment shall be as manufactured by the manufacturer specified in this section, or an approved equal. All materials furnished shall be permanently marked or tagged to show ASTM Designation and type of material. Materials shall not be steel stamped for identification. The finished materials shall be packaged for shipment, pipe ends shall be capped with plastic caps to protect the material from dirt and contamination during shipment and subsequent storage.

Unless otherwise specified, all pipes shall be sized according to the drawings. All valves, unless otherwise specified, shall be sized for the line into which they will be installed.

Insulation Materials:

Insulation for all exterior above ground piping shall be 2″ thickness open-cell high temperature foam insulation, Thermal conductivity K factor @ +75°F ≤ 0.26 BTU/hr/sq ft/°F/in., density of 0.6 to 0.7 lbs/cu ft, Flame spread and smoke development rating (ASTM E-84) of 10/50. Techlite® Type 79 insulation manufactured by Accessible Products Co., Tempe, AZ or equal.

Insulation Jacketing material for both above and below ground piping shall be made from polyester fabric, impregnated with PVC, white color, 30 mil thickness, Accessible Products Co. type SSL379 or equal.

Factory formed insulation inserts and jacket covers shall be provided for pipe fittings, flanges and pipe support saddles.

Project Title: OU 1-07B New Pump and Treat Facility
Project File: _____ A-ECS Number: _____
Project Number: _____ Subcontract Number: _____
Rev. 2 – 1/31/00

Piping Materials:

LINE CLASS	SERVICE	DESIGN PRESS	MAX. TEMP	PIPE MATERIAL	VALVE BODY	VESSEL\ TANK MATERIAL	NOTES
NC	CONTAMINATED WELL WATER (outside buildings)	150 PSIG	100 F	Carbon Steel (Welded, single "V" groove butt)	Carbon Steel	N/A	1
NG	CONTAMINATED WELL WATER (well, down hole)	150 PSIG	100 F	Carbon Steel	N/A	N/A	
NJ	POTABLE WATER	150 PSIG	100 F	Galv. CS	BRONZE	N/A	2
NN	CONTAMINATED WELL WATER (inside buildings)	150 PSIG	100 F	CARBON STEEL (Screwed for ≤ 2", BW for ≥ 2 ½")	CARBON STEEL (Screwed)	N/A	3
NN	TREATED WATER (inside and outside buildings)	150 PSIG	100 F	Carbon Steel (Screwed for ≤ 2", BW for ≥ 2 ½")	Carbon Steel (Screwed or flanged)	N/A	

NOTES:

1. Fittings for outer pipe must be split to be installed over the inner pipe.
2. Some potable water components inside building may be copper or bronze.
3. Some components inside building are PVC, Brass or Polypropylene.

Project Title: OU 1-07B New Pump and Treat Facility
Project File: _____ A-ECS Number: _____
Project Number: _____ Subcontract Number: _____
Rev. 2 – 1/31/00

PIPING MATERIAL SPECIFICATION

Carbon Steel Welded(double wall)
150# Service Rating
Line Class: NC

PIPE SIZE	DESCRIPTION	CODE
Pipe 2"" - 6"	Carbon Steel, Sch 40, beveled ends	ASTM A106, Grade B
Fittings 3"& 4" (inner pipe)	Seamless Carbon Steel, Schedule 40 long radius ells, beveled ends	ASTM A234, Grade B
6" (outer pipe)	Seamless Carbon Steel, Schedule 40 short radius ells, beveled ends	ASTM A234, Grade B
Branch Fittings		
1 ½"" and smaller branch	Weldolet or Threadolet, 3,000 # forged carbon steel	ASTM A-105
2" and larger branch	Reducing Tee, Seamless carbon steel, sch 40, beveled ends	ASTM A234, Grade B
Flanges	Class 150 ANSI B16.5, raised face weld neck, carbon steel, Schedule 40 bore	ASTM A105
Gaskets	1/8" thick Grafoil	ASTM B16.21
Bolting	Alloy stud bolt, ASTM A193, Grade B7 with two heavy hex nuts, ASTM A194, Grade 2H	
Ball Valves 1 1/2" and smaller	Carbon Steel body, screwed ends	ASTM A216-WCB

Project Title: OU 1-07B New Pump and Treat Facility
Project File: _____ A-ECS Number: _____
Project Number: _____ Subcontract Number: _____
Rev. 2 – 1/31/00

PIPING MATERIAL SPECIFICATION

Carbon Steel "down hole" well piping
150# Service Rating
Line Class: NG

PIPE SIZE	DESCRIPTION	CODE
Pipe 1" to 2"	Carbon Steel, Sch 80, NPT taper threaded ends	ASTM A106, Grade B
2 ½" and larger	Carbon Steel, Sch 40, NPT taper threaded ends	ASTM A53, Grade B
Fittings 1"to 2" couplings	Carbon Steel, extra strong, screwed taper threaded ends.	ASTM A 865
2 ½" and larger couplings	Carbon Steel, standard weight, screwed taper threaded ends.	ASTM A 865

Project Title: OU 1-07B New Pump and Treat Facility
Project File: _____ A-ECS Number: _____
Project Number: _____ Subcontract Number: _____
Rev. 2 – 1/31/00

PIPING MATERIAL SPECIFICATION
Galvanized Carbon Steel
125 - 150 psi Service Rating
Line Class: NJ

PIPE SIZE	DESCRIPTION	CODE
Pipe 1/4" - 1 1/2"	Carbon Steel, Galvanized, Sch. 80, Threaded and Coupled Ends.	ASTM A53
2" - 3"	Same as above except Sch. 40.	ASTM A53
Fittings All Sizes	150# Class, Galvanized Malleable Iron Screwed.	ASTM A197
Flanges 3" and Larger	Carbon Steel, Galvanized, 150# FF, Threaded Ends.	ASTM A105 ANSI B16.5
Gaskets All Sizes	Grafoil[R] flange gasket, full face, 1/8" Thick.	ANSI B16.21
Bolting	Hex head machine bolt with hex nut.	ASTM A307 Grade B
Branch Fittings 1/4" - 2"	Reducing Tee.	
Tubing	Seamless Copper Tubing, Soft Annealed.	ASTM B75
Tubing Fittings	Brass Swagelok Compression Fittings, Crawford Co.	
Gate Valves 2" and Smaller	125# Class Bronze, SCRD, Rising Stem, Bronze Trim.	ASTM B62
Globe Valves 2" and Smaller	125# Class, Bronze, SCRD, Rising Stem, Bronze Disc and Seats, with Backseat.	ASTM B62
Check Valves 2" and Smaller	Swing Check, 125# Class, Bronze, Body, Discs and Seats. Screwed Cap.	ASTM B62
Ball Valves 1/4" - 2"	300# Class WOG, SCRD, Bronze Body, TFE Seats and Seals, Lever Operated.	ASTM B62

Project Title: OU 1-07B New Pump and Treat Facility
Project File: _____ A-ECS Number: _____
Project Number: _____ Subcontract Number: _____
Rev. 2 – 1/31/00

PIPING MATERIAL SPECIFICATION
Carbon Steel
150 psi Service Rating
Line Class: NN

PIPE SIZE	DESCRIPTION	CODE
Pipe		
1 1/2"& Smaller	Carbon Steel, Sch 80, threaded ends	ASTM A53, Grade B
2"& Larger	Carbon Steel, Sch 40, Beveled ends	
Fittings		
2" & Smaller	150# Malleable Iron, Threaded	ASTM A197
2 1/2" & Larger	Seamless Carbon Steel, BW ends	ASTM A234, Grade WPB
Flanges		
2 1/2" & Larger	150# Flat Face Carbon Steel, Slip-on	ASTM A105, ANSI B16.5
Gaskets		
All Sizes	Grafoil[R] flange gasket, 1/8" thick.	ANSI B16.21
Bolting	Hex head machine bolt with hex nut	ASTM A307, Grade B
Tubing	Seamless Copper Tubing, Soft Annealed.	ASTM B75
Tubing Fittings	Brass Swagelok Compression Fittings, Crawford Co.	
Branch Fittings 1/4"-2"header	Reducing Tee, 150# Malleable Iron, Threaded	ASTM A197
2 1/2" and larger header	Reducing tee for 1½" and larger branch, Seamless carbon steel, Schedule 40 beveled ends.	ASTM A234, Gr. B
2 1/2" and larger header	Threadolet for 1¼" and smaller branch, 3000 # forged carbon steel	ASTM A 105
Globe Valves 2" and Smaller	800# Class, Forged Carbon Steel body, Threaded ends	ASTM A105

2 1/2" and larger	150# Class, Carbon Steel body, Flanged ends	ASTM A216 WCB
Gate valves 2" and Smaller	800# Class, Forged Carbon Steel body, Threaded ends	ASTM A105
2 1/2" and larger	150# Class, Carbon Steel body, Flanged ends	ASTM A216 WCB
Check Valves 2" and Smaller	800# Class, Forged Carbon Steel body, swing check, Threaded ends	ASTM A105
2 1/2" and larger	150# Class, Carbon Steel body, swing check, Flanged ends	ASTM A216 WCB
Ball Valves 1/4" - 2"	150# Class, Carbon Steel body, threaded ends full port	ASTM A216 WCB
2 1/2" and larger	150# Class, Carbon Steel body, full port Flanged ends	ASTM A216 WCB

PART 3—EXECUTION

Pipe Assembly Examination: Pipe assembly examination shall be performed by the contractor's representative in accordance with ASME B31.3 paragraphs 341 (Metallic Piping) and A341 (Non-Metallic Piping) as required for piping in "Normal Fluid Service", including the following;

- random examination of the assembly of threaded, bolted, and other joints to satisfy the examiner that they conform to the applicable requirements. When pneumatic testing is to be performed, all threaded, bolted, and other mechanical joints shall be examined.

- random examination during erection of piping, including checking of alignment, supports, and cold spring:

- examination of erected piping for evidence of defects that would require repair or replacement, and for other evident deviations from the intent of the design.

- For Non-Metallic Pipe Joints, not less than 5% of all bonded joints shall be examined by in-process examination. The joints to be examined being selected to ensure that the work of each bonder and bonding operator making the production joints is examined.

Bonding Qualifications: The subcontractor is responsible for the bonding of thermoplastic (PVC) piping done by personnel of his organization and shall conduct the required performance tests to qualify bonding procedure specifications and bonders or bonding operators in accordance with ASME B31.3, para A328. This involves subjecting a bonded test assembly to a hydrotest for the bonding procedure and for each bonder. The bonding procedure specification and performance qualifications for each bonder shall be submitted as vendor data for approval.

Soldering Procedure: Solders shall follow the procedure in the INEL Welding Manual and in the Copper Tube Handbook of the Copper Development Association and ASME B31.3, para 333.4. This procedure shall be submitted as vendor data for information.

Insulation installation: Insulation and jacket installation is to be performed in compliance with the directions of the manufacturer. Heat tracing is to be installed prior to installation of insulation. Voids must be filled in with insulation pieces.

GENERAL INSTALLATION OF ALL SYSTEMS:

Shall be in conformity with the applicable requirements of the ASME Code for Chemical Plant and Petroleum

Refinery Piping (ANSI B31.3), and the Uniform Plumbing Code.

Accessibility: Items such as valves, controls, access doors, specialties, and accessories shall be installed so as to be readily accessible for operation, servicing, maintaining and repairing.

Pipelines: Pipelines shall be installed in a neat and orderly manner. Installation shall avoid interference with work of the other trades.

Subcontractor shall install unions or flanges in addition to those shown on the drawings to facilitate dismantling as may be required.

Avoid tool marks and unnecessary pipe threads. Remove burrs formed when cutting pipe. Remove arc strikes, weld spatter and slag from welded joints by chipping and wire brushing. Tools used on stainless steel items shall be marked with blue paint and used on stainless steel items only. Tools used on other materials shall not be used on stainless steel items.

Joiners (length of pipe made by welding together or coupling together pieces shorter than 20 feet) will not be permitted unless approved by the contractors representative. Where joiners are permitted, welds shall be made by welders and procedures qualified and certified in accordance with the requirements specified in the welding section.

Piping shall be cleaned of dirt, rust, scale, grease and other foreign matter. Piping shall be kept clean as work progresses. Seal in accordance with underwriters requirements wherever piping passes through fire walls.

Pipe routings and pipe sizes shall be as indicated. Any proposed deviation from the indicated sizes and configurations shall be submitted to the contractors representative for approval prior to implementation. Fabrication and installation tolerance shall be ±1 inch maximum from the locations indicated.

Lines indicated with slopes shall be fabricated and installed so as to assure that no pockets remain in the final installation. Cases where a problem is anticipated in sustaining the required slope shall be brought to the Contractors representative for resolution.

Indicating instruments shall be installed for easy reading from operating floors or platforms. If 6 ft or more above floors or platforms, set at 45-degree angle.

Double Walled Piping: Subcontractor shall submit a procedure for installation and testing of secondary containment piping before fabrication or testing.

Pipe and Tube Bends: A minimum bend radius of five (5) pipe diameters may be used in place of elbows on SST pipe, CS pipe, and copper tubing, provided room exists for the bend (not fitting to fitting). All bends shall be free from wrinkles, kinks, and thin or flat spots. "Out of Roundness" shall not exceed six percent (6%) between the minimum and maximum cross-sectional dimensions. All bends are to be completed prior to

beveling, flanging or cutting to length.

PIPE JOINTS:

Threaded Pipe Joints: The threads of screwed joints of pipe, fittings, and couplings shall conform to the applicable requirements of ANSI B2.1. Threading shall provide proper number of perfect threads to produce full metal-to-metal contact when assembled. Male threads shall be wrapped with Teflon tape or lubricated with an approved lubricant recommended for the service involved. The first two male threads shall not be wrapped.

Welded Pipe Joints: Welded joints shall be made as specified in Specification section 15025 - Welding.

Welding on Galvanized Pipe: Where it becomes necessary to do welding on galvanized pipe or components, the galvanizing shall be cleaned away a minimum distance of 3 inches from the welding point. After welding and weld examination are completed, the cleaned areas and ungalvanized components shall be coated with a hand-applied zinc-rich compound to the same thickness as the adjoining pipe.

EQUIPMENT, INSTRUMENTS, ETC.:

Equipment shall be set in place, aligned, connected, and made ready for operation. Connections and required safety devices shall be installed. Initial lubrication shall be provided. Controls shall be set for efficient, stable operation.

Instruments and controls shall be installed and supported in a safe, rigid, neat, and orderly manner whether mounting is detailed or not detailed on the drawings. They shall be free from undue stresses and made suitable for normal use. Wall mounted supports shall be of the type as recommended by the manufacturer of the instrument/control used, and shall be provided and installed by the Subcontractor even if not indicated on the drawings.

All of the above shall be protected from damage during and after installation. At completion, work shall be free from tool marks, discolorations, cracks, scratches, chips and other defects.

HANGERS, SUPPORTS AND FASTENERS:

Piping shall be adequately supported during installation. Where permanent supports are not available at the time of piping erection, temporary supports shall be provided as required. Piping shall not be temporarily supported from other piping or conduit.

Pipe hangers shall be fabricated and installed as shown on the subcontract drawings. Where interferences occur with hanger placement, the Subcontractor shall submit an alternative position to the Contractors representative for approval.

Supports shall include wall brackets, riser clamps, hanger rods, pipe stands, pipe clamps, rollers, insulation protection saddles, pipe saddles, steel sections, shims, sleepers and other suitable devices which may be required for the proper installation of piping.

PRIMER APPLICATION: Pipe supports and support components shall be prime coated after fabrication in accordance with specification section 09900 – Painting.

FLASHING: The subcontractor shall furnish and install flashing at all locations where piping penetrates walls. The flashing shall be "Dektite" as manufactured by ITW Buildex, Itasca, IL of equal, with the aluminum portion of the flashing painted to match the exterior wall color.

FLUSHING:
All piping systems shall be cleaned by flushing after fabrication and inspection operations are completed and after the final tie-in welds have been made. A piping system specific flushing procedure detailing the process and equipment to be used shall be submitted and approved by the contractor prior to flushing.

Air Lines. Air lines shall be flushed with filtered compressed air and shall include the following:

The velocity of the flushing air shall be high enough to entrain dirt and debris.

Duration of the flushing shall be 5 minutes minimum. It shall be continued until flushing air is visually free of dirt and debris.

Liquid Lines. Liquid lines shall be flushed as follows:

Carbon steel, CPVC, and copper lines shall be flushed with clean potable water.

Flushing velocity shall be high enough to entrain dirt and debris.

Duration of flushing shall be continuous until discharge water looks clean.

To ensure the absence of moisture after flushing, the lines shall be blown dry with filtered compressed air.

General. The following requirements apply to both air and liquid lines:

Lines shall not be flushed into vessels, or other equipment in which debris could settle.

Valves shall be in the open position and check valves shall have the discs removed during the flushing operation.

Where practicable, in-line instruments shall be removed from the lines and instrument lines shall be disconnected prior to flushing.

Where it is impractical to remove the in-line instrument, permission shall be obtained from the Contractors representative to leave the instrument in-line, but the removable internals shall be removed.

Piping specialty items shall be retained in-line during the flushing operation; however, for items such as filters, the internals shall be removed.

Verification of cleanliness shall be by visual examination of an in-line 12-mesh strainer on the line discharge. The strainer shall be installed after the flushing duration is completed. Additional flushes through the strainer shall be performed until visual examination reveals no debris collection on the strainer.

Flushing shall be witnessed by the Contractors representative.

TESTING:

Piping shall be pressure tested after installation in accordance with ASME B 31.3, paragraph 345 using approved testing procedures. Testing procedures including a sketch/print indicating valve lineup and test boundaries shall be submitted and approved by the Contractor prior to use. Prior to testing, piping material shall be cleaned externally and cleaned and flushed internally. The tests will be witnessed by the Contractors representative. Joints including welds shall be exposed during initial testing of the piping installation. Upon completion of testing, piping shall be blown dry by using filtered compressed air. Openings shall be covered, capped, or plugged to prevent ingress of foreign matter. Testing shall include the following:

(a) Prior to testing, instrument lines shall be disconnected to prevent damage to instruments. Line mounted instruments shall be removed from the line.

(b) Equipment and other items not designed for the full test pressure shall be isolated from the test or removed from the line.

(c) Piping shall be hydrostatically or pneumatically tested at the pressure as indicated in Table 1.

(d) Potable water, or other approved source, shall be used for hydrotesting of piping. Nitrogen or filtered compressed air shall be used for pneumatic testing of piping.

(f) The test pressure shall be continuously maintained for a minimum of 10 minutes and at the required examination pressure for such additional time as may be necessary to conduct the examination of joints for leakage.

(g) Pneumatic test pressure shall be gradually increased until a gage pressure which is the lesser of one-half the test pressure or 25 psi is attained, at which time a preliminary check shall be made, including examination of all threaded, bolted or other mechanical joints. Thereafter, the pressure shall be gradually increased in steps until the test pressure is reached, holding the pressure at each step long enough to equalize piping strains. The pressure shall then be reduced to the design pressure and maintained for at least 10 min. and all joints and connections shall be examined for leaks.

(i) Gauges listed in the testing procedures for performing pressure testing shall be calibrated by the INEL calibration facility within 30 days of use. Test pressure shall be not less than 10 percent nor more than 90 percent of the gauge range. Pressure gauges shall be accurate to within 2% of Span.

(j) Instruments and other items removed or disconnected prior to testing shall be reconnected or reinstalled, and made ready for operation.

(k) A pressure relief device shall be provided in the testing apparatus, having a set pressure equal to the test pressure plus the lesser of 50 psi or 10% of the test pressure.

(l) Records shall be made of each piping system during the testing, including:

- date of test
- identification of piping system tested
- test fluid
- test pressure
- certification of results by examiner

These records shall be submitted to the contractor after testing for information.

Table I - PRESSURE TESTING REQUIREMENTS

	Line Class or Piping	Type of Test	Minimum Test Pressure
NC	CONTAMINATED WELL WATER (outside buildings)	Hydrostatic (Inner pipe)	225 PSIG
		Pneumatic (outer pipe)	25 PSIG
NJ	POTABLE WATER	Hydrostatic	175 PSIG

NN	CONTAMINATED WELL WATER (inside buildings)	Hydrostatic	225 PSIG
NN	Treated Water (inside and outside buildings)	Hydrostatic	225 PSIG

Sterilization:

General: The potable water piping system and tie-in shall be sterilized with a clean water and chlorine solution. The Subcontractor shall make the necessary arrangements for disposal of the water when draining the system. All cleaning and sterilizing shall be done in the presence of the Contractor's Representative.

All pipe, valves and fittings which cannot be sterilized in accordance with the procedure outlined above shall be thoroughly scrubbed in a disinfecting solution containing 1,000 ppm (1 lb. of HTH to 75 gallons of water), allowed to stand for 30 minutes and flushed with clean water before installation.

Procedure: Samples shall be taken at the farthest point (test point) in the system from the point of chlorine injection. The concentration at the test point shall measure a minimum of 50 ppm residual chlorine. Water containing the prescribed chlorine concentration shall remain in the system for a period of at least 8 hours.

The system shall then be thoroughly drained, flushed and refilled with clean water, as often as necessary, until the chlorine content of the water at the test point is decreased to 0.20 ppm residual or less.

The isolating block valves in the existing main shall be closed and the new system shall be drained, thoroughly flushed with water and then drained again after chlorination is completed and accepted.

Sampling: Samples of water taken from the sterilized lines of the system shall be delivered by the Subcontractor to the Industrial Hygiene Section Building CF-612, for analysis prior to use of water system. Sterilized sample containers can be obtained at the CF-612, Environmental Hygiene Lab , phone 526-2510,.

Sterilized sample containers shall not be opened prior to actual sampling time. Every precaution shall be taken to minimize the possibility of contaminating the sample containers.

Water samples shall be taken from sample point farthest from the water source and as directed by the Contractor. The sample point shall be fully opened and water allowed to run to waste for two to three minutes. The flow shall then be restricted to permit filling the sample containers without splashing.

All samples shall be accompanied with a complete and accurate identifying data sheet. The Subcontractor shall deliver the water samples to the Environmental Hygiene Laboratory within the same working shift.

If the sample analysis indicated contamination is present, or that the residual chlorine content is greater than 0.20 ppm, the Subcontractor will sterilize and/or reflush the entire system and have samples tested as often as necessary, until the specified test results are obtained.

Surveillance will be performed by the Contractor's Representative to verify compliance of the work to the drawings and specifications.

FIELD QUALITY CONTROL:

Surveillance will be performed by the Contractor's Inspector/Contractors Representative to verify compliance of the work to the drawings and specifications and to ensure the required examinations are being performed.

END OF SECTION 15404

Project Title: New Pump and Treat Facility
Project File: _____ A-ECS Number: _____
Project Number: _____ Subcontract Number: _____
Rev. 0 - 4/21/99

SECTION 15505--UNDERGROUND FIRE PROTECTION / POTABLE WATER PIPING

PART 1--GENERAL

WORK DESCRIPTION:

The Subcontractor shall furnish all labor, materials, equipment, and supplies and perform all work and operations necessary to install underground fire protection/potable water piping and valves going to the New Pump and Treat Facility (NPTF) building in accordance with the drawings, and this specification. References in this specification to other specifications, codes, standards or manuals shall be the latest edition including any amendments and revisions in effect as of the date of this specification.

WORK INCLUDES: Work includes, but is not limited to:

Fabricate, install and test underground fire water/potable water pipe, fittings, thrust blocks, rodded connections, valves, Valve stand pipes, impingement posts, locator ribbon and all necessary accessories and components to assure a complete and operable system. Subcontractor shall be responsible for coordinating all existing and new work.

QUALITY CONTROL:

Manufacturers: Firms regularly engaged in the manufacture of fire piping and accessories of types and sizes required, whose products have been in satisfactory use in similar service for not less than 5 years.

Installer: A firm with at least 3 years of successful installation experience on projects with underground fire water piping similar to that required for this project. The installing Subcontractor shall be licensed in the State of Idaho.

NFPA Code: Comply with NFPA No. 24, "Private Fire Service Mains."

FM Compliance: Comply with Factory Mutual "Approval Guide and Loss Control Data Sheet 3-10."

UL Listed or FM APPROVED: Provide piping, fittings, and related components with a UL listing or FM approval.

SUBMITTALS:

Submittals for Review:

Subcontractor shall furnish copies of product data for all materials to the contractor for approval prior to purchase.
Subcontractor shall submit a hydrostatic test procedure, chlorinization procedure and a flushing procedure to the contractor for approval prior to performing tests/procedures. These procedures shall detail the test connection/flush points, isolation points, test/flush boundarys. The pressure test procedure shall include a sketch showing all components of the testing apparatus.

Submittals for information:
none

Submittals for project close-out:
The "Contractors Material and Test Certificate for Underground Piping," NFPA 24 Figure A-9-2.1 shall be completed by the subcontractor and accepted by the contractor prior to final acceptance of the installation.

PART 2--PRODUCTS

GENERAL:

All materials, products, and equipment shall be as manufactured by the manufacturer specified in this section or approved equal. All components shall be rated for a working pressure of 175 psi, whether stated or not.

MATERIALS AND EQUIPMENT:

Fire Water piping and materials:

PVC Pipe: Underground fire water pipe shall be Class 200 PVC pipe listed for critical use in firelines with bell and spigot friction-type push on joints for piping 3" and larger. Pipe shall meet AWWA C900. Pipe shall be UL listed and FM approved, J.M. PIPE or approved equal.

Ductile Iron Fittings: Underground fittings shall be ductile iron mechanical or slip joint, and conform to the mechanical properties of ANSI/AWWA C151/A21.51, UL Listed, cement lined per AWWA C104/A121.4.

Post Indicating Valve (PIV): PIV's shall be UL listed or FM approved, resilient wedge gate valve conforming to AWWA C-509. The valve shall be flanged. The PIV shall be a Clow or approved equal.

Indicator Post: Posts shall be UL listed or FM approved sized for the depth of the PIV. This post shall accommodate all UL/FM gate valves. The post shall be a Clow or approved equal.

Key Valve with Road Box: Key valves shall be UL listed and FM approved, resilient wedge gate valve,

Clow provided by U.S. Filter or equal. The valves shall have mechanical joint, flanged, or other approved ends. Provide 4 in. cast ductile iron valve stand pipe, road box and key valve wrench.

Joint Restraining devices: Joint restraining devices other than thrust blocks shall not be used unless shown on the drawings or approved for use by the contractor on a case by case basis. Where approved for use, joint restraining devices shall meet UNI-B-13, *Recommended Standard Performance Specification for Joint Restraint Devices for use With Polyvinyl Chloride (PVC) Pipe*. The restraint mechanism shall be manufactured of ductile-iron conforming to ASTM A536-80. The restraint gland shall be such that it can replace the standardized mechanical joint bell conforming to AWWA C111 and AWWA C153. The restraining glands shall have a pressure rating equal to that of the PVC pipe on which it is used and shall be EBAA Iron Inc. Megalug or equal.

Protective coatings: Underground ductile iron valves, fittings and metallic fasteners shall be wrapped with polyken 920 20-mil wrap as manufactured by Kendall Polyken, Mansfield, MA or approved equal and be coated with the manufacturer's standard asphaltic coating or equivalent. Rodding shall be coated by the Subcontractor using an asphaltic material and then be wrapped with polyken 920 20-mil wrap or approved equal. Wrapping to be completed per manufacturer's instructions with a minimum of 50% overlap.

Pipeline coatings shall be inspected by the subcontractor with the use of a holiday detector. Performance of this holiday test shall be in accordance with NACE Standard RP-0274. Subcontractor shall repair all defects. The Contractor's Representative shall witness the testing..

Thrust Blocks: Thrust blocks and rodding shall be sized and installed in accordance with NFPA 24, 8-6. Size thrust blocks for silt conditions per NFPA 24 A-8-6.2.1 and the subcontract drawings.

Potable water piping materials:

The following materials shall be used for underground potable water pipeline installation as shown on the subcontract drawings.

Steel Piping: Underground potable water piping shall be carbon steel, galvanized, ASTM A-53, Sch 80 for ¼" to 1 ½" pipe size and Sch 40 for 2" and larger.

Fittings: Fittings shall be 150# class malleable iron, screwed, ASTM A197.

Protective coating: Potable water steel piping shall be coated/wrapped using the same materals and testing as specified for Fire Water ductile iron.

Underground Pipe Identification: New underground pipelines shall be identified by use of a plastic ribbon no less than 3 in. in width with a message printed on the ribbon which identifies the actual

pipeline contents. The ribbon shall be wrapped around the pipeline at no less than 1 wrap per 3 ft of run. The plastic ribbon shall be color coded in conformance with the following:

Categories of Pipeline Contents	Tape	Lettering
Fire Water	Red	White
Potable water	Green	white

PART 3—EXECUTION

The water pipeline shall be sized and installed as shown on the drawings.

Minimum earth cover:

The fire water lines shall have a minum earth cover of 6 ft to the top of pipe.

Acceptance Tests:

Flushing of Piping: New underground mains and lead-in connections to system risers shall be flushed thoroughly immediately after tie-in to system. Reference NFPA 24, Section 9-1.

Test of Piping System: All new Fire System piping shall be hydrostatically tested at not less than 225 psi pressure for 2 hrs. Reference NFPA 24, Section 9-2. Permissible leakage shall be as defined in the same section. Subcontractor's test procedure shall be submitted and approved by the contractor before use.

Holiday testing shall be completed for wrapped pipe, fittings, rodding, and valves per NACE standard RP-02-74. Subcontractor shall repair all defects. The Contractor's Representative shall witness the test.

Testing and flushing shall be witnessed by the Contractor's Representative.

Sterilization:

General: The fire water piping system and tie-in shall be sterilized with a clean water and chlorine solution. The Subcontractor shall make the necessary arrangements for disposal of the water when draining the system. All cleaning and sterilizing shall be done in the presence of the Contractor's Representative.

All pipe valves and fittings which cannot be sterilized in accordance with the procedure outlined above shall be thoroughly scrubbed in a disinfecting solution containing 1,000 ppm (1 lb. of HTH to 75 gallons of water), allowed to stand for 30 minutes and flushed with clean water

before installation.

Procedure: Samples shall be taken at the farthest point (test point) in the system from the point of chlorine injection. The concentration at the test point shall measure a minimum of 50 ppm residual chlorine. Water containing the prescribed chlorine concentration shall remain in the system for a period of at least 8 hours.

The system shall then be thoroughly drained, flushed and refilled with clean water, as often as necessary, until the chlorine content of the water at the test point is decreased to 0.20 ppm residual or less.

The isolating block valves in the existing main shall be closed and the new system shall be drained, thoroughly flushed with water and then drained again after chlorination is completed and accepted.

Sampling: Samples of water taken from the sterilized lines of the system shall be delivered by the Subcontractor to the Industrial Hygiene Section Building CF-612, for analysis prior to use of water system. Sterilized sample containers can be obtained at the CF-612, Environmental Hygiene Lab , phone 526-2510,.

Sterilized sample containers shall not be opened prior to actual sampling time. Every precaution shall be taken to minimize the possibility of contaminating the sample containers.

Water samples shall be taken from sample point farthest from the water source and as directed by the Contractor. The sample point shall be fully opened and water allowed to run to waste for two to three minutes. The flow shall then be restricted to permit filling the sample containers without splashing.

All samples shall be accompanied with a complete and accurate identifying data sheet. The Subcontractor shall deliver the water samples to the Environmental Hygiene Laboratory within the same working shift.

If the sample analysis indicated contamination is present, or that the residual chlorine content is greater than 0.20 ppm, the Subcontractor will sterilize and/or reflush the entire system and have samples tested as often as necessary, until the specified test results are obtained.

Surveillance will be performed by the Contractor's Representative to verify compliance of the work to the drawings and specifications.

END OF SECTION 15505

Project Title: OU 1-07B New Pump and Treat Facility
Project File: _____ A-ECS Number:
Project Number: _____ Subcontract Number:
Rev. 0 - 4/26/99

SECTION 15508 - AIR STRIPPER

PART 1--GENERAL

SUMMARY:

The Subcontractor shall furnish and install two air strippers, complete with blowers, controls and related equipment as required by this specification. The air strippers shall be low profile tray, forced draft design. The low profile stripper shall be designed for the removal of volatile organic contaminants from water, incorporating forced draft fresh air flowing through multiple perforations in the bottom of several trays. Off gas treatment is not required.

Section Includes: Work includes, but is not limited to:

Furnish and install two air strippers, complete with blower and related equipment as required by this specification. Provide warranty and submittals as specified below.

Related Sections:

Section 13400 Instruments and Equipment
Section 16000 Electrical General Provisisons
Section 16120 Cable, Wire, Connectors and Miscellaneous Devices

Performance Warranty :

Stripping performance for each volatile compound shall be guaranteed based on Vendor's actual results demonstrated during full-scale stripping of the volatile compound from water on a commercial air stripper. Provide computer modeling calculations to ensure VOC removal rates for the specific contaminants listed below in 50°F water pumped at 150 gpm per stripper, single pass with no recirculation.

Constituent	Influent Conc (ppb)	Clean-up Requirement (ppb)
TCE	1100	5
PCE	70	5
cis-1,2, DCE	120	70
trans-1,2, DCE	50	100

Equipment Warranty : Vendor shall supply as part of proposal package a copy of Equipment warranty documenting formal warranty coverage for one (1) year from date of shipment.

REFERENCES : All equipment provided and the installation of the system shall comply with the applicable sections of the following codes and standards:

ASME/ANSI B31.3 Chemical Plant and Petroleum Refinery Piping

ANSI C2	National Electric Safety Code
NFPA 70	National Electric Code
NEMA KS 1	Enclosed Switches

SUBMITTALS:

Submittals for review:
Vendor Approval: Subcontractor shall submit and obtain contractor approval of modeling calculations, proposed air stripper, model selected, equipment warranty, principal dimensions and details of construction prior to purchase and submittal of other required vendor data. The vendor's proposal package shall be approved prior to air stripper purchase. Acceptable vendors are *North East Environmental Products*, West Labanon, NH and *Cameron Environmental, Inc*, Torrance, CA or other approved equal.

Provide submittal packages(number specified in the vendor data schedule) prior to delivery which will include;

- Process and Instrument diagram of air stripper system
- Vendor cut sheets for all instruments, blower and other components
- Shop Drawings which are to include:
  - Principal dimensions and details of construction
  - Equipment layout drawing
  - Sizes and location of piping connections
  - Instrumentation and control wiring diagrams
- Operational Testing Procedure shall be submitted and approved prior to use.

Submittals for information :

- Installation instructions
- Operation and maintenance manual
- Recommended spare parts list
- Recommended repair/replacement intervals

Submittals for project close-out:

- Operational testing results .

QUALITY CONTROL:

Qualifications: Air Strippers shall be furnished by a firm qualified, accredited and regularly engaged in this type of work, and shall maintain shop and facilities for fabrication and maintenance of subject equipment.

Items of Any One Classification: Items which are used in quantity, such as valves, specialties, accessories, fittings, etc., shall in each case be the product of one manufacturer, and shall be used only for the services recommended by the manufacturer.

PART 2--PRODUCTS

MATERIALS:

Air Stripper : Sump, trays and cover shall be 304L stainless steel. Stripper shall be mounted on a modular steel frame. Standard features shall include gasketed removable trays with clean-out ports on each tray and sump inspection ports, stainless steel mist eliminator, stainless steel tray latches and internal spray nozzles.

Blower: Blower shall be direct-driven centrifugal design, with type B non-sparking internal construction. The blower shall be sized to deliver a constant outside airflow from the inlet ductwork shown on the contract drawings to the air stripper inlet. The blower shall be separately mounted (not on stripper skid) using vibration isolators and arranged (clockwise rotation, up-blast discharge) as shown on the contract drawings. Blower selection shall take into consideration approximately 0.65 inches w.g. of negative pressure due to inlet ductwork. The blower shall be provided with a 480 VAC, three phase TEFC motor.

Blower Vibration Isolators: Vibration isolators are to be provided by the blower manufacturer and installed by the subcontractor, matched and sized for the blower weight.

Stripper Accessories :
Sump level sight gauge fabricated from 2" clear PVC with tee fitting for installation of sump water level indicator(2"NPT female).
The following connections shall be provided as shown on the contract drawings:
Sump drain valve connection
Coupling for high level water switch (3/4" NPT)
2" influent connection
2" effluent connection

Electrical:
Electrical enclosures shall be NEMA type 4. Provide liquid-tight flexible conduit for connections of motors and for other electrical equipment subject to vibration.

PART 3--EXECUTION

GENERAL INSTALLATION OF ALL SYSTEMS:

Shall be in conformity with the applicable requirements of ASME Code B31.3. and the codes referenced above.

Skid construction : Modular skid shall be painted carbon steel with provisions for fork lift access.

Operational Testing: Assembled unit shall be fully tested at design air and water flow to confirm proper hydraulic, electrical and leak-free performance of basic system and all accessories by the subcontractor. Subcontractor shall submit test procedure for approval prior to use.

SECTION 15509 - SURGE TANK

PART 1--GENERAL

WORK DESCRIPTION:

The Subcontractor shall furnish and install all equipment, materials and supplies and perform all work and operations necessary for furnishing and installing the Surge tank, T-300 as shown on the subcontract drawings and specified herein.

WORK INCLUDED: Work includes, but is not limited to:

Furnish and install the surge tank complete with nozzles, instrumentation and access ladder as shown of the contract drawings.

Warranty: The Vendor shall warrant that the tank manufactured and supplied by it shall be free from defects in material and workmanship for a period of three years from delivery date to the installation site. The Warranty shall be submitted as vendor data for approval prior to purchase.

Certification : The vendor shall supply a written assessment, reviewed and certified by an independent, qualified registered professional engineer (PE), in accordance with 40 CFR §270.11(d), attesting that the tank system has sufficient structural integrity and is acceptable for the storing and treating of hazardous waste. The assessment must show that the foundation, structural support, seams, connections, and pressure controls (if applicable) are adequately designed and that the tank system has sufficient structural strength, compatibility with the waste(s) to be stored or treated, and corrosion protection to ensure that it will not collapse, rupture, or fail. This assessment, which will be used by the contractor (EPA Regional Administrator) to review and approve or disapprove the acceptability of the tank system design, must include, at a minimum, the following information:

(1) Design standard(s) according to which tank(s) and/or the ancillary equipment are constructed;
(2) Hazardous characteristics of the waste(s) to be handled: The waste to be handled is water contaminated with 1100 ppb of trichloroethylene.
(3) For new tank systems or components in which the external shell of a metal tank or any external metal
component of the tank system will be in contact with the soil or with water, a determination by a corrosion expert of:

(4) Factors affecting the potential for corrosion, including but not limited to:

Corrosion-resistant materials of construction such as special alloys, fiberglass reinforced plastic, etc.;

QUALITY CONTROL:

Qualifications: The surge tank shall be furnished and installed by a firm qualified, accredited and regularly engaged in this type of work, and shall maintain shop and facilities for fabrication and maintenance of subject equipment.
Materials, Products and Equipment: Materials, products and equipment shall be first quality and be furnished and installed in strict accordance with the subcontract drawings and these specifications.

SUBMITTALS:

Submittals for review:
Warranty for review and approval prior to purchase
Certification by PE for review and approval prior to purchase
Shop drawings and catalog data shall be submitted for review and approval prior to purchase and shall include the following:
- Principal dimensions and details of construction.
- Sizes and location of tank fittings and components.
- Data as necessary to accurately describe all equipment furnished.

Tank leak test procedure shall be submitted for approval before use

Submittals for information:
Tank wall thickness calculations performed in accordance with ASTM D1998 shall be submitted for information.

Submittals for project close-out:
Tank leak test records in accordance with ASME B31.3, Para 345.2.7 shall be submitted after the leak test.

PART 2--PRODUCTS

GENERAL:

The surge tank shall be as manufactured by the Central California Container Mfg., Inc. / R.L. Battisiti Sales, SLC or approved equal.

MATERIALS:

Tank: The tank shall be a 3000 gallon flat bottom vertical closed top cylindrical tank, approximately 8 ft. diameter X 9 ft. high, atmospheric design pressure, closed top with vented screw-in manway, high density polyethylene 14 lb tank wall. Natural color. Material tensile strength @ yield shall be 2700 psi min.per ASTM test D-638. The tank shall be rotationally molded with an uninterrupted bottom knuckle radius for maximum strength per design requirements of ASTM D1998. All fittings shall be located away from the bottom knuckle radius.

Tank Appurtenances:

Nozzle connections as shown on the subcontract tank drawing.
Ladder, painted carbon steel
Vented and screwed manway
Tank overflow piping, drain valve/piping, sight gage, and all instrumentation attaching to the tank as shown on the contract drawings.

PART 3--EXECUTION

Tank handling/installation shall follow procedures specified in the INEEL Hoisting and Rigging manual. Equipment shall be set in place, aligned, connected, and made ready for operation

All of the above shall be protected from damage during shipment, installation and after installation. At completion, work shall be free from tool marks, discolorations, cracks, discontinuities and other defects.

QUALITY CONTROL TESTING:

Testing shall include, but not be limited to, the following:

Tank and appurtenances shall be leak tested in accordance with ASME B31.3, Para 345.2. The leak test shall be maintained for at least 10 minutes and all joints and connections shall be examined for leaks.

FIELD QUALITY CONTROL:

Surveillance will be performed by Contractor's Representative to verify compliance of the work to the drawings and specifications.

END OF SECTION 15509

Project Title: OU 1-07B New Pump and Treat Facility
Project File: _____ A-ECS Number: _____
Project Number: _____ Subcontract Number: _____
Rev. 0 - 4/26/99

SECTION 15802—HVAC/ DUCTWORK

PART 1--GENERAL

SUMMARY:

The Subcontractor shall furnish and install all equipment, materials and supplies and perform all work and operations necessary to install the HVAC systems and appurtenances and to complete the work as shown on the subcontract drawings and specified herein. Upon completing installation of the HVAC systems, the Subcontractor shall test as specified herein to verify that the systems are properly installed and operate as required.

The Subcontractor shall field verify all ductwork dimensions, prior to fabrication and shall maximize shop fabrication of ductwork in order to minimize field work time.

Section Includes: Work includes, but is not limited to:

- Air unit heaters in NPTF building and wellhouses
- Exhaust ventilators
- Air stripper inlet ductwork
- Air stripper outlet ductwork
- Supports for ductwork, unit heaters and exhaust ventilator including additional cross members attaching to the roof purlins.

RELATED SECTIONS :

Section 09900 – Painting
Section 15508 – Air Stripper

SYSTEM DESCRIPTION:

The Heating system consists of 6 unit heaters in the NPTF building and a unit heater in each of the well houses. The building exhaust system consists of a roof mounted powered exhaust ventilator. Inlet ductwork is required for supplying outside air to the air stripper blowers. Air Stripper exhaust ducts extend through the roof and are supported by the roof purlins.

SUBMITTALS:

Submittals for review:
Catalog cuts of Air unit heaters shall be submitted for review and approval prior to purchase.
Catalog cuts of exhaust ventilator shall be submitted for review and approval prior to purchase.
Shop drawings showing principal dimensions, details of construction and materials shall be submitted for review.
Submittals for information:
Catalog cuts of all purchased ductwork items such as stationary louver, elbows, transitions, flow

straightener and support items shall be submitted for information.

Submittals for project close-out:

none

QUALITY CONTROL:

The Subcontractor shall comply with the requirements of the current revision of the following codes and standards, as referenced and specified in this section.

AMERICAN INSTITUTE OF STEEL CONSTRUCTION (AISC)

AISC	Manual of Steel Construction

AMERICAN SOCIETY FOR TESTING AND MATERIALS (ASTM)

ASTM A 36	Standard Specification for Structural Steel
ASTM A 653	Specification for Steel Sheet, Zinc-Coated (Galvanized) Pr Zinc-Iron Alloy-Coated (Galvannealed) by the Hot-Dip Process
ASTM A 924	Standard Specification for Steel Sheet, Metallic-Coated by the Hot-Dip Process
ASTM D 1785	Polyvinyl Chloride (PVC) Plastic Pipe

NATIONAL FIRE PROTECTION ASSOCIATION (NFPA)

NFPA 90A	Standard for the Installation of Air Conditioning and Ventilating Systems
NFPA 90B	Standard for the Installation of Warm Air Heating and Air Conditioning Systems

SHEET METAL AND AIR CONDITIONING CONTRACTORS' NATIONAL ASSOCIATION, INC. (SMACNA)

SMACNA	HVAC Duct Construction Standards Metal and Flexible
SMACNA	HVAC Systems Duct Design
SMACNA	Rectangular Industrial Duct Construction Standards

SMACNA Round Industrial Duct Construction Standards

UNDERWRITERS LABORATORIES (UL)

UL-181 Factory-Made Air Ducts and Air Connectors

PART 2--PRODUCTS

GENERAL:

All materials, products, and equipment shall be manufactured as specified in this section, or approved equal. Products shall be in accordance with Duct Construction Standards (HVAC, Round, or Rectangular), SMACNA and the Uniform Mechanical Code.

Ductwork size, location, and permissible fitting configurations are shown on the subcontract drawings. All fittings installed in the ductwork system shall have loss coefficients less than or equal to those shown in the SMACNA "HVAC Systems Duct Design" Loss Coefficient Tables.

System components shall be designed to operate at the given design parameters at an altitude of 5,000 ft.

DUCTWORK:

All duct material shall be in accordance with this specification and HVAC Duct Construction Standards Metal and Flexible, SMACNA for the pressure classification shown on the subcontract drawings. Unless otherwise shown on the subcontract drawings, material gage, duct reinforcing, and connections shall be in accordance with the SMACNA standard for the given pressure classification.

Duct system material substitutions shall be approved by the contractor's representative. In the case of a substitution, the subcontractor shall provide calculations proving that noise level, total pressure loss, system flow characteristics, and integrity for an "or equal" substitution are all equal to or better than the system as designed and specified.

Round Duct Materials: Round duct gage shall be in accordance with Table 3-2B of HVAC Duct Construction Standards Metal and Flexible, SMACNA for the specific duct pressure classifications shown on the drawings. Duct materials shall be G-60 coated galvanized steel of ASTM A 653 and A924 grades. Uncoated, polyvinyl coated, aluminum alloy coated or aluminum-zinc alloy coated steel or stainless steel may be used if a minimum corresponding base metal thickness and material strength is provided as approved by the contractor's representative. Lockforming quality is required. The use of an alternative material requires approval by the contractor's representative. 90 °Elbows shall have a minum R/D ratio (centerline radius to duct diameter) of 1.5. 90° Elbows shall be either die formed

smooth or fabricated using a minum of 4 mitered pieces. The blower outlet loop ductwork and fittings shall be galvanized die-formed smooth bore 20 gage or equal.

Air Stripper Discharge Ductwork: Discharge duct shall be schedule 40 PVC pipe, ASTM D-1785. Flashing around the discharge duct at the roof shall be EPDM material with an aluminum base, "Dektite" by ITW Buildex, Itasca, IL or approved equal. The discharge duct shall be supported as shown on the contract drawings.

Rectangular Duct Materials: Unless otherwise specified steel sheet and strip used for duct and connectors shall be G-60 coated galvanized steel of lockforming grade conforming to ASTM A 653 and A924 standards. Minimum yield strength for steel sheet and reinforcements is 30,000 psi. Each duct system shall be constructed for the specific duct pressure classifications shown on the contract drawings. Where no pressure class is specified, the 1" water gage pressure class shall be used.

Flow Straightener: Flow straighteners shall be in accordance with HVAC Systems Duct Design, SMACNA, Figure 6-16.

Duct Supports:
Unless otherwise shown on the subcontract drawings, ducts shall be supported in accordance with standard details of SMACNA "HVAC Duct Construction Standards Metal and Flexible". Structural steel shapes shall bein accordance with Manual of Steel Construction, AISC, ASTM A-36. Carbon Steel supports shall be painted in accordance with Specification Section 09900.

DUCT SYSTEM EQUIPMENT:

Exhaust Ventilator : Exhaust ventilator shall be as specified in the "fan schedule" on the contract drawings and additionally shall be supplied with a bird screen. The subcontractor shall design, furnish and install additional roof supporting members and flashing to mount the exhauster in the roof.

Unit Heaters: Unit heaters shall be as specified in the "unit heater schedule" on the contract drawings. The subcontractor shall design, furnish and install the unit heater mounting supports. Additional members may be added between the roof purlins for this purpose.

Stationary Louvers: Louvers shall be drainable stationary type. Blades shall be contained within a single frame. Bird screen with 3/4 in. mesh aluminum or galvanized steel screen shall be contained within a removable frame. Louver design shall incorporate structural supports required to withstand an external wind load of 80 mph. Louver free area calculations shall be in accordance with "HVAC Duct Construction Standards Metal and Flexible", Figure 5-2. Louvers shall be AMCA certified with published air performance and water penetration data that bears AMCA Certified Ratings Seal. Louvers shall receive finish color coating to match building exterior. Color samples shall be submitted for approval by the contractor's representative. Louvers shall be Ruskin Model ELF6375DX High Performance Stationary Louvers or approved equal.

Flex Duct: Where shown on the subcontract drawings, the subcontractor shall supply and install

flexible duct for connection from hard duct systems to equipment. Construction of flexible duct shall be in accordance with SMACNA "HVAC Duct Construction Standards Metal and Flexible". Flexible duct shall conform to NFPA Standard 90A and 90B and be tested in accordance with Underwriters Laboratory's Standard for Factory made Duct Materials, UL-181 Class 1, and must be installed in accordance with the conditions of their listing by UL. Duct shall be Atco Rubber Products Flexible Air Duct System or approved equal.

Flex Connections: Where shown on the subcontract drawings to prevent vibration transmission and absorb expansion, flexible connections shall be installed in accordance with SMACNA "HVAC Duct Construction Standards Metal and Flexible", Figure 2-17. Flexible connections shall be rated for the pressure classification of the duct system. Flexible connections shall be 30 oz. Neoprene impregnated nylon fabric duct material.

Ductwork Sealant: Duct sealant shall be nonhardening, nonmigrating mastic or liquid elastic sealant as compounded and recommended by the manufacturer specifically for sealing joints and seams in ductwork.

Butterfly Valve: Blower exhaust ducts shall have 150# butterfly valves, lever operated, Wafer style cast iron or ductile iron body, EPDM or Buna-N seats, Watts Regulator model 10-DBF–04-111-15 or equal installed as shown on the contract drawings.

Pressure/ Sample Port Taps: ¼" NPT bulkhead fittings for metal ductwork, ¼" NPT tapped holes in PVC ductwork.

DUCTWORK INSULATION:

Ductwork insulation is not required.

PART 3--EXECUTION

FABRICATION AND INSTALLATION OF DUCTWORK:

Assemble and install ductwork in accordance with recognized industry practices which will achieve air tight and noiseless systems capable of performing each indicated service. Install each run with a minimum of joints. Align ductwork accurately at connections. Coordinate duct installation with installation of accessories and other associated work of the ductwork system. Installation shall be in accordance with SMACNA Duct Construction Standards (HVAC, Round, or Rectangular) and the Uniform Mechanical Code.

Ductwork connections shall be in accordance with the applicable SMACNA Duct Construction Standard. Flanged connections shall be installed where shown on the contract drawings. Gasket material for flanged connections shall be 1/8 in. neoprene.

Duct Sealing: Ducts must be sufficiently airtight to ensure economical and quiet performance of the system, however a seal class and associated testing will not be applied to this duct system.

Duct Gage, Supporting, and Reinforcing: Unless otherwise shown on the subcontract drawings, duct gage, hangar spacing, and reinforcing shall be in accordance with SMACNA "HVAC Duct Construction Standards Metal and Flexible" Hangars shall be installed in accordance with the requirements of the appropriate SMACNA standard for the duct material gage, reinforcing, pressure classification, and duct classification unless otherwise shown on the contract drawings.

Equipment Installation: Equipment installation shall be in accordance with SMACNA "HVAC Duct Construction Standards" and the manufacturer's recommendations. Holes for damper rods, thermostats, etc... shall be drilled or machine punched.

CLEANING AND PROTECTION:

Clean Ductwork Internally: Clean ductwork internally, unit-by-unit as it is installed. Clean external surfaces of foreign substances which might cause corrosive deterioration of the metal. Or, where air distribution accessories and ductwork are to be painted, clean surfaces of foreign substances which might interfere with painting or cause paint deterioration.

Temporary Closure: At ends of ducts which are not connected to equipment or air distribution devices at the time of ductwork installation, provide temporary closure of polyethylene film or other covering which will prevent the entrance of dust and debris until the time connections are to be completed.

FIELD QUALITY CONTROL:

Contractor Inspection: Surveillance will be performed by the Contractor's Representative to verify compliance of the work to the drawings and specifications.

END OF SECTION 15802

Project Title: OU 1-07B NPTF Building
Project File: _____ A-ECS Number: _____
Project Number: _____ Subcontract Number: _____
Rev. 0 Initial Specification 4/21/99

SECTION 16000 -- ELECTRICAL GENERAL PROVISIONS

PART 1 -- GENERAL

WORK DESCRIPTION:

Work Included: The general work associated with electrical systems and equipment, and to be performed as part of the electrical contract includes identification, tests, inspections by governing authorities, start-up of electrical systems and equipment, operating and maintenance manuals, as built drawings, final cleaning of electrical work, and similar work.

Wiring and Power Distribution: Incoming service as shown, transformers, panelboards, enclosures, boxes, conduit systems, raceways, cable, wire, wiring devices, overload protection, equipment connections, grounding system, and similar work, all as indicated on the electrical drawings and elsewhere in the contract documents.

Lighting: General light fixtures for both interior (fluorescent) and exterior (low pressure sodium vapor) lighting, including emergency lighting and exit signs.

Special Electrical System: Included are the fire alarm (FA) and emergency Communications System (ECS).

Codes and Standards:

Underwriters Laboratories (UL): All materials, appliances, equipment, or devices shall conform to the applicable standards of Underwriters Laboratories, Inc. All material, appliances, equipment, or devices shall be listed and/or labeled UL.

National Electrical Code (NEC): All installations and electrical work shall comply with the applicable provisions of the latest edition fo the National Electrical Code, NFPA - 70.

General Design Criteria (GDC): All electrical design, electrical equipment, and electrical installation shall comply with the applicable sections of division 16 of DOE Order 6430.1A, General Design Criteria.

Project Record Documents

Submit under the provisions of the Vendor Data Schedule. All actual installations under this division shall be documented unless otherwise noted in the individual specification. All results of inspections and tests shall be documented and submitted as described in the individual specifications.

Completed electrical system shall conform to applicable provisions of the Special Conditions, the Technical Specifications, and the subcontract drawings.

SUBMITTALS:

See Vendor Data Schedule.

PART 2 -- PRODUCTS

GENERAL:

Furnish all labor, materials, equipment, and appliances required for the complete the installation of the electrical system. All labor, materials,

service, equipment, and workmanship shall conform to the applicable chapters of the NEC, the National Electrical Safety Code (NESC), Occupational Safety and Health Administration (OSHA), and the terms and conditions of the electrical utility. All modifications required by these codes, rules, regulations, and authorities shall be completed by the Subcontractor without additional charge to the Contractor.

CONDITION OF PRODUCTS:

Except as otherwise indicated, furnish new electrical products, free of defects and harmful deterioration at the time of installation. Provide each product complete with trim, accessories, finish, guards, safety devices, and similar components specified or recognized as integral parts of the product, or required by governing regulations.

Unless otherwise indicated by the drawings or specifications or approved in writing, the materials and/or equipment furnished under these specifications shall be the standard products of manufacturers regularly engaged in the production of such equipment, and shall be the manufacturer's standard design.

UNIFORMITY:

Where multiple units of a product are required for the electrical work, provide identical products by the same manufacturer without variations except for sizes and similar variations as indicated.

PART 3 -- EXECUTION

COORDINATION OF ELECTRICAL WORK:

General: It is recognized that the subcontract documents are diagrammatic in showing certain physical relationships which must be established within the electrical work and in its interface with other work, including utilities and mechanical work, and that such establishment is the exclusive responsibility of the Subcontractor.

Arrange electrical work in a neat, organized manner with conduit and similar services running parallel with the primary lines of the building construction, and with a minimum of 7 ft - 0 in. overhead clearance.

Locate operating and control equipment properly to provide easy access, and working clearance in accordance with the NEC.

Advise other trades of openings or clearances required in their work for the subsequent move-in and assembly of large units of electrical equipment.

Electrical connections shall be tightened to torque specifications stated by the equipment manufacturer.

QUALITY CONTROL TESTING:

Subcontractor Supplied Testing: Upon completing installation of all systems and equipment, but prior to project close out, the Subcontractor shall conduct an operational test of all equipment, controls, and devices installed or modified by the Subcontractor. All equipment shall test satisfactory or be repaired at no additional cost to the Contractor.

The Subcontractor shall test all devices in the presence of the Contractor's Representative. Subcontractor shall coordinate testing with the Contractor and schedule testing a minimum of two weeks in advance of the test. The Subcontractor shall inform the Contractor in writing of the scheduled test to allow the Contractor to designate the Contractor's Representative. This

operational testing is in addition to testing required in separate sections of this specification.

EQUIPMENT IDENTIFICATION:

Equipment identification will comply with the following alpha-numeric convention, unless otherwise specified. AAA-XXX NAME where the AAA is the two or three letter designation for the equipment use, XXX is a one, two, or three number character identifying the specific equipment number, and NAME is the name of the specific equipment. In those cases where there are two identical pieces of equipment and one is normally in standby, an A or B may be added after the number. For example:

F-3B Decant Water Filter

The F indicates a filter, 3 indicates the third filter in the system, the B indicates that this is the second of two identical filter housings, and Decant Water Filter identifies the function.

Typical equipment designations are:

AB	Air Blower
AC	Air Compressor
DP	Distribution Panel
F	Filter
FCP	Fire Alarm Control Panel
H	Electric Heater
LP	Lighting Panel
MCC	Motor Control Center
P	Pump
PP	Power Panel
T	Tank
WC	Water Cooler

LABELING:

Install permanent labels on all electrical panels, cabinets, disconnects, motor starters, major equipment, or components. Labels shall be laminated black phenolic or plastic with white engraved letters. Lettering for panels and equipment shall be minimum 2 in. high. Labels shall be permanently installed by gluing or screwing to equipment covers. Labels shall show panel or load name and circuit fed from.

All receptacle and switch covers shall be labeled; lettering shall be ½ in. high. Labels for receptacles and switches shall be permanently installed by gluing only. Labeling for receptacles and switches shall show panel and circuit number each device is fed from.

FIELD QUALITY CONTROL:

Surveillance will be performed by the Contractor's Representative to verify compliance of the work to the drawings and specifications.

END OF SECTION 16000

SECTION 16109 -- SWITCHES, RECEPTACLES, AND WALL PLATES

PART 1 -- GENERAL

WORK DESCRIPTION:

Provide and install switches and receptacles of sizes, ratings, materials, and types as shown on the drawings.

Work Included:

Work includes installing all light switches for interior and exterior lighting; 120 VAC receptacles for the facility (interior and exterior); 480 VAC welding receptacles.

Related Sections:

Codes and Standards: All equipment provided and the installation of switches, receptacles, and wall plates shall comply with the applicable sections of the following codes and standards:

NFPA 70 - National Electrical Code.

SUBMITTALS:

See Vendor Data Schedule.

PART 2 -- PRODUCTS

MATERIALS:

Switches: Provide general-duty flush or surface mounted single-pole toggle switches, with mounting yoke insulated from mechanism, equipped with plaster ears, switch handle, and side-wired screw terminals. Switches shall be 20 ampere, 125 VAC rated suitable for use with florescent lights. Switches shall be single-pole (double-pole), 3 way or 4 way as indicated by the drawing symbols as shown on the drawings. Where more than one switch is shown at an outlet, switches shall be installed under a gang plate in an order appropriate to the outlet location.

Switch color shall be ivory.

Receptacles:

General-Duty Duplex: Provide duplex general-duty, flush or surface mounted receptacles, 2-pole, 3-wire grounding, with green hexagonal equipment ground screw, ground terminals and poles internally connected to mounting yoke, 20 ampere, 125 VAC, with metal plaster ears, side wiring, NEMA configuration 5-20R unless otherwise indicated on the drawings.

GFCI: Provide general-duty duplex, ground fault circuit interrupter receptacles, feed-through type, capable of protecting connected downstream receptacles on single circuit, ground type, UL rated Class A, Group 1, 20 ampere rating, 125 VAC, 60 Hz; equipped with 20 ampere plug configuration NEMA 5-20R.

480 VAC, 30 ampere, three phase outlets: Provide mechanically interlocked switched enclosure with a pre-wired twist-lock receptacle for 480 volt, 30 amp, 3 phase, 4 wire twist lock plug. Type 4X enclosure with ¾" watertite conduit hub. (for connection of well pumps and sump pump). Hubbell Catalog # SE2730A (or approved equal).

Wall Plates: Provide single switch, single and duplex outlet wall plates for wiring devices, with ganging cutouts as indicated, provide with metal screws for securing plates to devices, screw heads finished to match plate finish.

PART 3 -- EXECUTION

INSTALLATION:

Install receptacles, switches, and wall plates where indicated on the drawings in accordance with recognized industry installation practices.

Receptacles to be mounted 18 in. from the floor in the facility. Switches to be mounted 48 in. from the floor unless shown otherwise on the drawings.

Coordinate with other work including electrical raceway and equipment installation work, as necessary to interface installation of wiring and devices with other work.

Install receptacles and switches only in electrical boxes that are clean and free from building materials and debris.

QUALITY CONTROL TESTING:

Subcontractor Supplied Testing: Visual inspections to determine that equipment installation conforms to NEC, these specifications, and the drawings.

FIELD QUALITY CONTROL:

Surveillance will be conducted by the contractor's representative to assure compliance with these drawings and specifications.

END OF SECTION 16109

SECTION 16110 -- ELECTRICAL RACEWAYS

PART 1 -- GENERAL

WORK DESCRIPTION:

Provide and install electrical raceways of types, grades, and sizes as shown on the drawings. Provide complete assembly of raceways including, but not necessarily limited to, couplings, elbows, adapters, hold-down straps, and other components and accessories as needed for a complete system.

Coordinate with other work as necessary to interface installation of electrical raceways and components with other work.

Work Included:

Work includes installing all raceways as shown on the drawings. These raceways, primarily conduits, include, but are not limited to, metal conduit, flexible metal conduit, electrical metallic conduit, nonmetallic conduit, electrical nonmetallic tubing, flexible nonmetallic conduit, fittings, conduit bodies, and wireways.

Related Sections:

Section 16000 - General Electrical Provisions.

Section 16450 - Grounding.

Codes and Standards: All equipment provided and the installation of electrical raceways shall comply with the applicable sections of the following codes and standards:

ANSI C80.1 - Rigid Steel Conduit, Zinc Coated.

ANSI C80.3 - Electrical Metallic Tubing, Zinc Coated.

ANSI C80.5 - Rigid Aluminum Conduit.

NECA - Standard of Installation

NEMA FB 1 - Fittings, Cast Metal Boxes, and Conduit Bodies for Conduit and Cable Assemblies.

NEMA RN 1 - Polyvinyl Chloride (PVC) Externally Coated Galvanized Rigid Steel Conduit and Intermediate Metal Conduit.

NEMA TC 2 - Electrical Plastic Tubing (EPT) and Conduit (EPC-40 and EPC-80).

NEMA TC 3 - PVC Fittings for Use with Rigid PVC Conduit and Tubing.

NEMA WD 6 - Wiring Device Configurations.

NFPA 70 - National Electric Code.

SUBMITTALS:

See Vendor Data Schedule.

Submittals include:

Product Data: Provide product data for metallic conduit and tubing, flexible metallic and nonmetallic conduit, nonmetallic (PVC) conduit and

tubing, liquid-tight flexible conduit, fittings, and conduit bodies.

As-Builts: Submit as-built drawings showing actual conduit routing.

PART 2 -- PRODUCTS

MATERIALS:

Conduit and Fittings: Rigid metal conduit or IMC shall be used for all conductors where outside, buried in earth, in masonry, in concrete, and in damp or wet locations. All conduit shall be UL approved, ¾: in. minimum unless shown otherwise on the drawings. All conduit, fittings, and bodies shall meet the appropriate nationally recognized standard and shall be UL listed.

Polyvinyl chloride (PVC) conduit shall be heavy wall, Schedule 40, rated 90°C. PVC may be used for fire alarms, feeders underground, and branch circuits installed under floor slabs. If PVC conduit is used, a stranded copper ground conductor shall be installed per the NEC. All underground bends, of 30 degrees or more, shall be rigid galvanized steel conduit.

Where required, stainless steel rigid conduit shall be Schedule 10 minimum (304L or 316L stainless) and comply with section 15400.

All bends shall be completely below finished floor for under floor conduit runs.

Electrical metallic tubing (EMT) shall be installed in all areas except those stipulated for rigid conduit or IMC. EMT shall be UL approved, standard weight, electro-galvanized steel, ¾ in. minimum size.

Outdoor installations, above grade, shall be rigid steel or aluminum conduit.

Flexible metal conduit shall be installed in dry locations unless shown otherwise on the drawings.

Liquid-tight, flexible conduit shall be installed in wet locations. Liquid-tight flex shall be grounding-type with PVC jacket.

Conduit fittings for rigid conduit shall be rust-resistant cast steel.

Conduit fittings for EMT shall be steel, rain-tight compression type.

All junction boxes shall be galvanized unless shown otherwise.

Small junction boxes (4 11/16 in. square and smaller) shall be stamped from one piece of sheet steel and shall be galvanized.

PART 3 -- EXECUTION

INSTALLATION:

Install conduit, tubing, and duct products as indicated on the drawings in accordance with manufacturer's written instructions, applicable requirements of NEC and National Electrical Contractors Association's "Standard of Installation" and complying with recognized industry practices to ensure that products serve intended functions.

All conduit shall be supported using coated steel or malleable iron straps, lay-in adjustable hangers, clevis hangers, and split hangers. Supports shall be arranged so as to prevent misalignment during wiring installation. Conduit supports shall be fastened to building structures and surfaces and not to

ceiling support wires. Conduit shall not be supported with wire or perforated pipe straps. Remove all wire used as temporary supports. Where mounting channel is used, all exposed ends shall be capped.

Conduit shall be installed so as to maintain headroom and present a neat appearance. Route exposed conduit parallel and perpendicular to walls. Conduit installed above accessible ceilings shall be routed parallel and perpendicular to walls. Conduit installed in and under slab shall be from point-to-point and shall not be crossed. Adequate clearance shall be maintained between conduit and piping. A minimum of 12 in. clearance shall be maintained between conduit and surfaces with temperatures exceeding 104 °F (40 °C).

Provide flexible conduit for all motor connections, and for other electrical equipment connections where subject to vibration or movement.

Provide liquid-tight flexible conduit for connections of motors and for other electrical equipment where subject to movement or vibration, and where subject to one or more of the following conditions:

Exterior locations.

Moist or humid atmosphere where condensate can be expected to accumulate.

All conduit joints shall be cut square, threaded, reamed smooth, and drawn up wrench tight. Bends of offsets shall be made with standard conduit bending dies that will not injure or flatten the pipe.

Rigid conduit terminating at cabinets and boxes shall be rigidly secured with locknuts inside and outside and with an insulated type grounding bushing.

Male threads on exterior runs of galvanized steel conduit shall be thoroughly coated with conducting sealing media such as petroleum base products. No red lead shall be used on any conduit joint.

All conduit penetrations through building walls, fire walls, or floors shall be grouted around outside of conduits. Conduits penetrating exterior walls shall be internally weather sealed. Conduits two in. or greater, passing through fire floors shall have UL or FM approved internal fire seals.

Ground and bond conduit under the provisions of Section 16450.

CONDUIT IDENTIFICATION:

All conduits shall be identified by a self-adhesive Brady label encircling the conduit and a legend of the conductor characteristics (example - 480 V, 3 ph, VP for voice paging, FA for fire alarm, and EVAC for evacuation) in black letters within 3 ft of enclosures. Exposed electrical conduit shall be identified at intervals not to exceed 20 ft, and at least once in each room.

QUALITY CONTROL TESTING:

Subcontractor Supplied Testing: Visual inspections to determine that equipment installation conforms to NEC, these specifications, and the drawings.

FIELD QUALITY CONTROL:

Surveillance will be conducted by the contractor's representative to assure compliance with the drawings and specifications.

END OF SECTION 16110

SECTION 16120 -- CABLE, WIRE, CONNECTORS, AND MISCELLANEOUS DEVICES

PART 1 -- GENERAL

WORK DESCRIPTION:

Provide and install cables, wire, and wiring connectors of sizes, ratings, materials and types as shown on the drawings.

Work Included:

Work includes, but is not limited to, installing all cables, wire, and wiring connectors as shown on the drawings.

Related Sections:

Section 16000 - Electrical General Provisions; Equipment Identification.

Codes and Standards: All equipment provided and the installation of cables, wires, connectors, and miscellaneous devices shall comply with the applicable sections of the following codes and standards:

NFPA 70 - National Electrical Code.

SUBMITTALS:

See Vendor Data Schedule.

Submittals include:

Product Data: (to be developed)

Test Reports: Submit results of all testing and inspections conducted.

PART 2 -- PRODUCTS

MATERIALS:

600 V Wiring:

Conductors for power and lighting branch circuits shall not be smaller than No. 12 AWG.

Conductors shall be stranded for all sizes of wire and cable larger than No. 10 AWG.

Conductors shall be copper for all sizes.

Wire insulation shall be type THHN/THWN for all 600 V conductors unless otherwise specified.

Wiring shall be color coded as indicated below:

1

Conductors

System	Phase A	Phase B	Phase C	Neutral	Ground
208/120	Black	Red	Blue	White	Green
480/277	Yellow	Orange	Brown	Gray	Green

For large conductors not generally furnished with colored insulation, phase identification shall be achieved by the use of plastic tape or sleeves of the appropriate color. Yellow phase tape shall consist of two separate bands at each application point in order to avoid confusion with white, gray, or orange after aging. All wire markers and phase tape shall be covered by clear heat shrink sleeving to protect the markings.

CONNECTORS:

Spring type pressure connectors such as Scotchlock@ shall be used for splicing no. 8 AWG and smaller.

Splitbolt and/or lug type connectors such as Burndy@ shall be used for splicing No. 6 AWG and larger.

Crimp on spade or ring tongue lug connectors for connection to terminal boards such as Stakon@ shall be used.

Wire/Device Identification: All conductors shall be identified with self-adhering, oil and moisture resistant vinyl labels, covered with clear heat shrink tubing or white heat shrink tubing with black typed on letters with non-smearing ink as manufactured by Brady, T&B, or approved equal. Hand lettered labels shall not be used. All conductors shall be labeled with point-to-point destination as shown on the drawings. Identification and labeling shall comply with the appropriate provisions of Section 16000.

PART 3 -- EXECUTION

INSTALLATION:

General: Install electrical cable, wire, and connectors as indicated on the drawings, in accordance with manufacturer's written instructions, applicable requirements of NEC and National Electric Contractors Association's "Standard of Installation," and in accordance with recognized industry practices to ensure products serve intended function.

Coordinate cable and wire installation work with electrical raceway and equipment installation work, as necessary for proper interface.

Pull conductors together where more than one is being installed in a raceway. Do not exceed the conductor manufacturer's recommended pulling tension.

Use pulling compound or lubricant, where necessary, pulling compound shall not deteriorate conductor insulation.

Keep conductor splices to a minimum. Splices shall not be located in conduit or associated conduit fitting.

Install splices and taps which have mechanical strength and insulation rating equivalent-or-better than conductor.

Use splice and tap connectors which are compatible with conductor material.

QUALITY CONTROL TESTING:

Subcontractor Supplied Testing:

Meggering: Prior to terminating, test all cable or wire (for connections greater than 400 V) for insulation resistance with megger (1000 V megger for 600 V insulation). Any wire or conductor with less than 10 megohms to ground shall be replaced before proceeding with termination. List conductors tested on required test data submittal sheet.

Electrical Continuity: After conductor connectors (for connections greater than 400 V) are installed and conductors are labeled, but prior to termination to terminals or devices, an electrical continuity test shall be performed on each conductor using a battery powered buzzer or ohmmeter to determine that all power, control, grounding, and other conductors are properly installed and identified. List all conductors tested on required test data submittal sheets. The Subcontractor shall provide the Test Data Submittal Sheets.

FIELD QUALITY CONTROL:

Surveillance will be conducted by the contractor's representative to assure compliance with the drawings and these specifications.

END OF SECTION 16120

Project Title: OU 1-07B NPTF Building
Project File: _____ A-ECS Number: _____
Project Number: _____ Subcontract Number: _____
Rev. 0 Initial Specification 2/5/99

SECTION 16155 -- MOTOR STARTERS

PART 1 -- GENERAL

WORK DESCRIPTION:

Provide and install motor starters of types, grades, and sizes as shown on the drawings or in this specification. Provide complete assembly including enclosure; circuit breakers, motor controllers, or fuses; overload heaters; control transformer if needed; control switching; and such other components and accessories as needed for a complete motor controller system.

Work Included:

Work includes, but is not limited to, providing, installing, and/or mounting the starter(s), wiring the controls and feeders, installing the overload heaters, wiring to the motor terminal box, and connecting the motor for the appropriate voltage and speed in accordance with the manufacturer's written instructions, and verify the correct rotational direction.

Related Sections:

Section 16000 - Electrical General Provisions; Equipment Identification.

Codes and Standards: All equipment provided and the installation of motor starters shall comply with the applicable sections of the following codes and standards:

NECA - (National Electric Contractors Association) Standard of Installation.

NEMA AB 1 - Molded Case Circuit Breakers.

NEMA ICS 2 - Industrial Control Devices, Controllers, and Assemblies.

NEMA ICS 6 - Enclosures for Industrial Controls and Systems.

NEMA KS 1 - Enclosed Switches.

NFPA 70 - National Electrical Code.

UL 198C - High-Interrupting Capacity Fuses; Current Limiting Type.

UL 198E - Class R Fuses.

SUBMITTALS:

See Vendor Data Schedule.

Submittals include:

Product Data: Provide catalog sheets showing voltage, controller size, ratings and sizes of switching and overcurrent protective devices, short circuit ratings, dimensions, and enclosure details.

Test Reports: Submit field test and inspection procedures and results.

Manufacturer's Installation Instructions: Indicate application conditions and limitations of use stipulated by Underwriters laboratory, Inc. or testing firm acceptable to the authority having jurisdiction as suitable for the purpose specified and indicated. Include instructions for storage, handling, protection, examination, preparation, and installation of product.

PART 2 -- PRODUCTS

MATERIALS:

Motor Starters: Provide motor starters and auxiliary components; of types, sizes, ratings, and electrical characteristics as shown on the drawings, which comply with manufacturer's standard materials, design, and construction in accordance with published product information, and as required for a complete installation.

Manual motor starters shall meet the requirements of NEMA ICS 2, AC general-purpose Class A manually operated, full-voltage controller with overload element, NO/NC auxiliary contacts, and push button operator. The enclosure shall be NEMA ICS 6 Type 1.

Magnetic motor controllers shall meet the requirements of NEMA ICS 2, Class A magnetic controller for induction motors rated in horsepower. The coil operating voltage shall be 120 volts 60 Hz. Overload relays shall be NEMA ICS bimetallic. The enclosure shall be NEMA ICS 6 Type 1.

Equip starters with steel mounting plate, molded arc hood, and three pole block overload relay with heater elements sized for motor running protection. Equip starter with control transformer of the VA rating as shown on the drawings. Provide control transformer with 480 V fused primary and a 120 V fused and grounded secondary, if required. When individual starters are specified with a remote source of control power, the main switch of the motor circuit shall be supplied with an auxiliary N.O. contact which is factory wired such that the incoming control power going to the coil must first pass through the main switch auxiliary contact. In addition to the main switch auxiliary contact, the Subcontractor shall mount a plastic nameplate (about 1 X 2 in.) on the door to read CAUTION Foreign Control Voltage Source. Provide all starters with a manual control switch as shown on the drawings, along with two N.O. and two N.C auxiliary contacts. Provide dual element, non-renewable fuses, sized for motor running protection where fusible disconnect switches are used in lieu of circuit breakers or motor controllers.

AC Fractional HP Manual Starters (Single Phase): Provide manual single-phase fractional hp motor starters, of types, ratings, and electrical characteristics as shown on the drawings; equip with thermal overload relay and properly sized overload heater for protection of 120, 208, and 240 VAC motors of 2 hp and less. Starters shall meet the requirements of NEMA ICS 2, AC general-purpose Class A manually operated, full-voltage controllers for fractional horsepower induction motors.

PART 3 -- EXECUTION

INSTALLATION:

Install motor starters as indicated on the drawings and in accordance with manufacturer's written instructions, applicable requirements of NEC and National Electrical Contractors Association's "Standard of Installation," and complying with recognized industry practices to ensure that products serve intended function.

Install fuses in fusible disconnects, if used. Fuses, where used, shall have a voltage rating not less than the circuit voltage indicated. Fuses shall have current capacity as indicated and a minimum interrupting capacity of 100,000 amperes rms symmetrical. All fuses shall be class R. Fuses used to protect motors shall be Bussman Type FRS-R or approved equal. Where short circuit current limiting is required, fuses shall be Bussman LPS-RK, LPN-RK, or approved equal.

Install heater elements in overload relays. Install and terminate all wiring in starter enclosure.

Provide engraved plastic nameplates under the provision of Section 16000. Provide neatly typed label inside each motor controller door identifying motor served, nameplate horsepower, full load amperes, code letter, service factor, and voltage/phase rating.

QUALITY CONTROL TESTING:

Subcontractor Supplied Testing: Visual inspection to determine that equipment installed conforms to NEC, these specifications, and the drawings. Operate and verify that motor rotates freely and in the required direction.

Inspect and test each enclosed controller to the requirements of NEMA ICS 2. Report results.

FIELD QUALITY CONTROL:

Surveillances will be conducted by the contractor's representative to assure compliance with the drawings and these specifications.

END OF SECTION 16155

SECTION 16160 -- PANELBOARDS

PART 1 -- GENERAL

WORK DESCRIPTION:

Provide and install distribution and power panelboards of sizes, ratings, materials, and types as shown on the panel schedules. Panelboards shall be equipped with thermal-magnetic, molded case circuit breakers of trip ratings as shown on the panel schedules.

Work Included:

Work includes, but is not limited to, furnishing and installing the panelboards shown on drawings and specifications including the enclosures, bus bars, breakers, covers, circuit directories, and wire labeling as required. Terminate all conductors inside enclosures. All panelboards, especially those where knockouts have been pulled or holes sawed in the enclosure, shall be thoroughly cleaned and vacuumed to ensure all metal scraps and shreds are removed before the cover is installed.

Related Sections:

Section 16000 - Electrical General Provisions; Equipment Identification.

Section 16450 - Grounding.

Codes and Standards: All equipment provided and the installation of panelboards shall comply with the applicable sections of the following codes and standards:

NECA - (National Electrical Contractors Association) Standard of Installation.

NEMA 250 - Enclosures for Electrical Equipment (1000 Volts Maximum).

NEMA AB 1 - Molded Case Circuit Breakers.

NEMA ICS 2 - Industrial Control Devices, Controllers and Assemblies.

NEMA ICS 4 - Terminal Blocks for Industrial Control Equipment and Systems.

NEMA KS 1 - Enclosed and Miscellaneous Distribution Equipment Switches (600 volts Maximum).

NEMA PB 1 - Panelboards.

NEMA PB 1.1 - Instructions for Safe Installation, Operation and Maintenance of Panelboards Rated 600 Volts or Less.

NETA ATS - (International Electrical Testing Association) Acceptance Testing Specification for Electrical Power Distribution Equipment.

NFPA 70 - National Electrical Code.

SUBMITTALS:

See Vendor Data Schedule.

Submittals include:

Shop Drawings: Indicate outline and support point dimensions, voltage, main bus ampacity, integrated short circuit ampere rating, circuit breaker and fusible switch arrangement and sizes.

Manufacturer's Installation Instructions: Indicate application conditions and limitations of use stipulated by Underwriters Laboratory, Inc. or testing firm acceptable to the authority having jurisdiction as suitable for the purpose specified and indicated. Include instructions for storage, handling, protection, examination, preparation, and installation of product.

Maintenance Data: Include spare parts listing; source and current prices of replacement parts and supplies; and recommended maintenance procedures and intervals.

As-Builts: Submit as-built drawings showing actual locations of panelboards and circuit arrangements.

Test Reports: Submit test reports as identified.

PART 2 -- PRODUCTS

MATERIALS:

Bussing Assembly and Temperature Rise: All bussing shall be copper. Panelboards bus structure and main lugs or main breaker shall have current ratings as shown on the panelboard schedule. Such ratings shall be established by heat rise tests with maximum hot spot temperature on any connector or bus bar not to exceed 50 °C rise above ambient. Heat rise tests shall be conducted in accordance with UL Standard 67. The use of conductor dimensions will not be accepted in lieu of actual tests. All panelboards shall have a ground bus and a neutral bus installed.

Fusible Switch Assemblies: Fusible switch assemblies shall meet the requirements of Standard NEMA KS 1. They shall be quick-make, quick-break, load interrupter enclosed knife switches with an externally operable handle. Interlocks shall be provided to prevent opening the front cover with the switch in the ON position. The handle shall be lockable in the OFF position.

The fuse clips shall be designed to accommodate Class R fuses.

Molded Case Circuit Breakers: Circuit breakers shall meet the requirements of Standard NEMA AB 1 with integral thermal and instantaneous magnetic trip in each pole. Circuit breakers shall be equipped with individually insulated, braced, and protected connectors. The front faces of all circuit breakers shall be flush with each other. Large, permanent, individual circuit numbers shall be affixed to each breaker in a uniform position. Tripped indication shall be clearly shown by the breaker handle taking a position between "ON" and "OFF". Provisions for locking each breaker in the open position shall be provided. Provisions for additional breakers shall be such that no additional connectors will be required to add the breakers.

Integrated Equipment Short Circuit Rating: Each panelboard, as a complete unit, shall have a factory established short circuit current rating equal to or greater than the integrated equipment rating shown on the panelboard schedule or on the drawings. Short circuit current rating shall be established by the factory testing with the overcurrent devices mounted in the panelboard. The short circuit tests on the overcurrent devices in the panelboard structure shall be made simultaneously by connecting the fault to each overcurrent device with the panelboard connected to its rated voltage source. Method of testing shall be in accordance with UL Standard 67. The source shall be capable of supplying the specified panelboard short circuit current or greater. Factory testing of panelboard overcurrent devices for short circuit rating only while individually mounted is not acceptable. Also, testing of the bus structure by applying a fixed fault to the bus structure alone is not acceptable. Panelboards shall be factory marked with their maximum short circuit current rating at the supply voltage and shall be UL listed.

Cabinet: Panelboard assembly shall be enclosed in a steel cabinet. The rigidity and gauge of steel shall be specified in UL Standard 50 for cabinets. The size of wiring gutters shall be in accordance with UL Standard 67. An interior metal panel for mounting terminal blocks and electrical components shall be provided. Cabinets shall be equipped with latch and tumbler-type lock on door of trim. Doors over 48 in. long shall be equipped with three-point latch and vault lock. All locks shall be keyed alike. Two keys shall be furnished. As required, metal barriers to form separate compartments for wiring of different systems and voltages shall be provided. End walls shall be removable. Finish shall be gray backed enamel elecrto-deposited over a clean phosphatized steel. A circuit directory frame and card with clear plastic covering shall be provided on the inside of the door. The directory shall be typed by the Subcontractor and shall indicate the area and function served by each breaker.

Safety Barriers: The panelboard interior assembly shall be dead front with the panelboard front removed. Main lugs or main breakers shall have barriers on five sides. The barrier in front of the main lugs shall be hinged to the fixed part of the interior. The end of the bus structure opposite the mains

shall have barriers.

UL Listing: Panelboards shall be listed by Underwriters Laboratories and shall bear the UL label. When required, panelboards shall be suitable for and marked for use as service equipment in orange letters.

Hinged Cover Enclosures: Hinged cover enclosures for interior use shall be constructed in accordance with NEMA 250, Type 1 steel enclosures. The covers shall be a continuous hinge, held closed by key and supplied with two keys. An interior metal panel for mounting terminal blocks and electrical components shall be provided.

Terminal Blocks: Terminal blocks shall be NEMA ICS 4. Power terminals shall be unit construction type with closed back and tubular pressure screw connectors, rated at 600 V. Signal and control terminals shall be modular construction type suitable for channel mounting with tubular pressure screw connectors rated at 300 V. A ground bus terminal block, with each connector bonded to the enclosure, shall be provided.

Specific Requirements:

HT-302

480 V, 3 phase, 250 A bus, 42 branch circuit panel, surface mount, with a 225 A main breaker , Square D, NF442L2C or equivalent.

DP-301

120/240 V, single phase, 100 A bus, 20 circuit panel, surface mounted, with a 100 A main breaker, Square D, NQOD20M100CU or equivalent.

PART 3 -- EXECUTION

INSTALLATION:

Install panelboards as indicated on the drawings and in accordance with manufacturer's written instructions, applicable requirements of NEC and National Electrical Contractors Association's "Standard of Installation," and complying with recognized industry practices to ensure that products serve intended function.

Provide filler plates for unused spaces in panelboards. Provide typed circuit director for each branch circuit panelboard. Revise directory to reflect circuiting changes required to balance phase loads. Provide engraved nameplates under the provision of Section 16000.

Ground and bond panelboards enclosures according to Section 16450.

QUALITY CONTROL TESTING:

Subcontractor Supplied Testing: Visual inspection to determine that equipment installed conforms to NEC, these specifications, and the drawings. Measure steady state load currents at each panel board feeder; rearrange circuits in the panelboard to balance the phase loads to within 20% of each other. Maintain proper phasing for multi-wire branch circuits.

Inspect and test in accordance with NETA ATS, except Section 4, as listed in Section 7.4 and Section 7.5 (for circuit breakers). Report results.

FIELD QUALITY CONTROL:

Surveillances will be conducted by the contractor's representative to assure compliance of the work with the drawings and specifications.

END OF SECTION 16160

SECTION 16360 -- DISCONNECT SWITCHES

PART 1 -- GENERAL

WORK DESCRIPTION:

Provide and install disconnect switches of sizes, grades, and types as shown on the drawings. Provide complete assembly including hubs, fuses, and other components and accessories as needed for complete system.

Work Included:

Work includes, but is not limited to, furnishing and installing the electrical disconnect switches as shown on drawings and specifications including the hubs, fuses, and other components and accessories needed for a complete system.

Related Sections:

Section 16000 - General Electrical Provisions.

Codes and Standards: All equipment provided and the installation of disconnect switches shall comply with the applicable sections of the following codes and standards:

NFPA 70 - National Electrical Code.

SUBMITTALS:

See Vendor Data Schedule.

PART 2 -- PRODUCTS

MATERIALS:

Disconnects: Disconnect switches shall be NEMA type, heavy duty, single throw, fuses or non-fused, and have current and voltage ratings as shown on the drawings.

Switches shall be operated with external operating handle which is an integral part of the box - not the cover. The operating mechanism shall be quick-make, quick-break, and shall not be capable of being restrained by the operating handle during the opening and closing operation.

Dual interlocks shall interlock the switch box cover with the switch mechanism and shall prevent opening or closing the box cover when the switch contacts are closed and the switch mechanism is in the "ON" position. An interlock release shall be provided to defeat the interlocking mechanism and to permit

opening the box cover when the switch contacts are closed. To defeat the interlock release and permit opening the box cover shall require an external tool.

Switch handles shall be designed for padlocking in the "OFF" position, locking the door closed to inhibit access to the switch. All current-carrying metal parts of the switch shall be enclosed.

PART 3 -- EXECUTION

INSTALLATION:

Install disconnect switches as indicated on the drawings and in accordance with manufacturer's written instructions, applicable requirements of NEC and National Electrical Contractors Association's "Standard of Installation," and complying with recognized industry practices to ensure that products serve intended function.

Install disconnecting devices associated with motors, and other pieces of equipment, within sight of the device where practical, or unless otherwise indicated on the drawings. All disconnecting devices shall be clearly labeled to distinguish which motor/piece of equipment it disconnects.

QUALITY CONTROL TESTING:

Subcontractor Supplied Testing: Visual inspection to determine that equipment installed conforms to NEC, these specifications, and the drawings.

FIELD QUALITY CONTROL:

Surveillance will be conducted by the contractor's representative to assure compliance of the work with the drawings and specifications.

END OF SECTION 16360

SECTION 16370 OVERHEAD POWER DISTRIBUTION

PART 1 -- GENERAL

WORK DESCRIPTION:

Provide and install overhead medium and high voltage power distribution, and associated equipment including poles, crossarms, insulators, line conductors, pole mounted transformers, arresters, fuse cut-outs, pole anchors and associated hardware.
Note - Installation of the equipment mentioned shall be by *LIMITCO Power Management.*

Work Included:

Work includes, but is not limited to, purchase, receiving, storage and transporting the electrical service distribution equipment noted above, and coordination with *LIMITCO Power Management Company*. Installation of conduits, conductors, and distribution equipment from the weatherhead connection shall be furnished and installed by the sub-contractor.

Related Sections:

Section 16000 - General Electrical Provisions.
Section 16450 - Grounding

Codes and Standards: All equipment provided and the installed shall comply with the applicable sections of the following codes and standards:

NFPA 70 - National Electrical Code.
American National Standards Institute (ANSI):

ANSI C2-97	National Electrical Safety Code
ANSI C29.4-89	Insulators - Wet-Process Porcelain and Toughened Glass - Suspension Type
ANSI C29.4-89	Wet-Process Porcelain Insulators - Strain type.
ANSI C29.5-84	Wet-Process Porcelain Insulators - Low and Medium Voltage types.
ANSI C29.7-92	Porcelain Insulators - High Voltage Line-Post Type.
ANSI C37.30-92	Definitions and Requirements for High-Voltage Air Switches, Insulators, and Bus Supports.
ANSI C135.1-79	Galvanized Steel Bolts and Nuts for Overhead Line Construction
ANSI C135.22-88	Zinc-Coated Ferrous Pole-Top Insulator Pins with Lead Threads for Overhead Line Construction.
ANSI O5.1-92	Wood Poles Specifications and Dimensions.

American Society for Testing and Materials (ASTM):

ASTM A36/A36M-96	Standard Specification for Carbon Structural Steel.

ASTM A475-95	Standard Specification for Zinc-Coated Steel Wire Strand.
ASTM A675/A675M Rev. A-90	Steel Bars, Carbon, Hot-Wrought, Special Quality, Mechanical Properties.
ASTM B231-95	Concentric-Lay-Stranded Aluminum 1350 Conductors.
ASTM B232-92	Standard Specification for Concentric-Lay-Stranded Aluminum conductors, Coated-Steel Reinforced (ACSR).
ASTM B2-94	Medium-Hard Drawn Copper Wire
ASTM D698-91	Test Method for Laboratory Compaction Characteristics of Soil Using Standard Effort (12,400 ft-lbf/ft^3).
ASTM D1586-92	Standard Test Method for Penetration Test and Plit-Barrel Sampling of Soils.

American Wood-Preservers Association (AWPA):

AWPA C4-89	Poles - Pressure Process.
AWPA C25-89	Standard for the Preservative Treatment of Crossarms by the Pressure Process.

Institute of Electrical and Electronics Engineers (IEEE):

IEEE C62.11-93	Metal-Oxide Surge Arresters for AC Power Circuits.

InterNational Electrical Testing Association (NETA):

NETA ATS-95	Acceptance Testing Specification for Electrical Power Distribution Equipment.

SUBMITTALS:

See Vendor Data Schedule.

PART 2 -- PRODUCTS

MATERIALS:

A. Poles - Pressure treated Southern yellow pine, size and length as defined on drawings
B. Crossarms - 3 ½" x 4 ½" x 8' pressure treated douglas fir
C. Pole Hardware
D. Insulators - assembly, sutiable for 15kv, ANSI 29.4,5 and 7
E. Line Conductors - copper, as identified on drawings
F. Arresters and cut-outs - fused cut-out arrester combination unit, cutout rated 15kv, 200 amps, 12,000 amps IC, surge arrester, direct connected 15kv metal oxide valve, with crossarm mounting hardware
G. Fuses for cut-outs and switches - type K, see single line for rating
H. Pole mounted distribution transformer - pole mounted, see single line for ratings and quantities, ANSI C57.12.20, 1 phase, oil filled, 125kv bil, 65 degrees C over 30 degrees C rise, externally operated changer for two each 2-1/2% above and below normal voltage taps.
I. Anchors - 12" Dia. helical screw type guy anchor with minimum pullout capacity of 23000 pounds.

PART 3 -- EXECUTION

INSTALLATION:
Install distribution equipment as indicated on the drawings and in accordance with applicable manufacturer's written instructions, applicable requirements of NEC and National Electrical Contractors Association's "Standard of Installation", and complying with recognized industry practices to ensure that products serve intended function.

QUALITY CONTROL TESTING:

Subcontractor Supplied Testing: Visual inspection to determine that equipment installed conforms to NEC, these specifications, and the drawings.

FIELD QUALITY CONTROL:

Surveillance will be conducted by the contractor's representative to assure compliance of the work with the drawings and specifications.

END OF SECTION 16370

SECTION 16450 -- GROUNDING

PART 1 -- GENERAL

WORK DESCRIPTION:

Provide and install grounding of types, ratings, materials, and sizes as shown on the drawings.

Work Included:

Work includes, but is not limited to, furnishing and installing the grounding as shown on drawings and specifications including the grid wire, grounding rods, ground bars, other components, and accessories needed for a complete system.

Related Sections:

Section 16000 - General Electrical Provisions

Codes and Standards: All equipment provided and the installation of the grounding system shall comply with the applicable sections of the following codes and standards:

ANSI C2 - National Electric Safety Code.

NETA ATS - (International Electrical Testing Association) Acceptance Testing Specification for Electrical Power Distribution Equipment and Systems.

NFPA 70 - National Electrical Code.

SUBMITTALS:

See Vendor Data Schedule.

Submittals include:

Product Data: Submit manufacturer's data for grounding electrodes and connections.

Test Reports: Submit reports of inspections and tests. Submit report of overall resistance to ground and resistance to each electrode.

Manufacturer's Instructions: Indicate application conditions and limitations of use stipulated by product testing agency specified by Underwriters Laboratory, Inc. or testing firm acceptable to the authority having jurisdiction as suitable for the purpose specified and indicated. Include instructions for storage, handling, protection, examination, preparation, and installation of product.

As-Builts: Submit as-built drawings showing actual location of components and grounding electrodes.

Certificate of Compliance: Submit Certificate of Compliance indicating approval of installation by authority having jurisdiction.

PART 2 -- PRODUCTS

MATERIALS:

Grounding grid wire shall be a minimum of No. 4 AWG bare stranded copper sized and located as shown on the drawings.

Ground rods shall be a minimum of 3/4 in. diameter and 10 ft long, copper clad steel.

Ground grid connections below grade shall be made by the exothermic welding process. Exothermic welds shall be Cadweld or approved equal.

Equipment ground conductors shall be green insulated or bare copper sized and located as shown on the drawings.

PART 3 -- EXECUTION

INSTALLATION:

Install a complete grounding system as indicated on the drawings and in accordance with applicable requirements of NEC and National Electrical Contractors Association's "Standard of Installation," and complying with recognized industry practices to ensure that products serve intended function.

All exposed non-current-carrying metallic parts of electrical equipment, raceways, building steel, and neutral conductors of the wiring system shall be grounded.

Grounding Grid: A grounding grid shall be sized and provided around the periphery of the building as shown on the drawings. The grounding grid shall be a minimum of 30 in. below finished grade.

All underground metallic water piping, all building structural steel (in particular, building corner columns), rebar, and underground metallic conduit and ground cables shall be connected to the building ground grid. These connections to the ground grid shall be exothermically welded.

Cathodically protected piping or conduit shall not be connected to the ground grid.

Conduit shall not be used as the ground conductor.

Ground Rods: Ground rods shall be driven around the building adjacent to the ground grid and connected thereto. The ground rods shall be driven so that the top of the rod is 1 ft below finished grade.

Exothermic Welds: Exothermic welds shall be made in accordance with the manufacturer's written recommendations.

QUALITY CONTROL TESTING:

Subcontractor Supplied Testing: Visual inspection to determine that the grounding installation conforms to NEC, these specifications, and the drawings. Test and inspect the grounding system in accordance with NETA ATS, except Section 4. Perform and document inspections and tests listed in NETA ATS, Section 7.13.

FIELD QUALITY CONTROL:

Surveillances will be conducted by the contractor's representative to assure compliance with the drawings and specifications.

END OF SECTION 16450

SECTION 16460 -- TRANSFORMERS, GENERAL LIGHTING AND DISTRIBUTION DRY TYPE, INDOOR AND OUTDOOR, UNDER 600 VOLTS

PART 1 -- GENERAL

WORK DESCRIPTION:

Provide and install transformers of sizes, ratings, and types as shown on the drawings. Transformer construction to be in accordance with this specification.

Work Included:

Work includes, but is not limited to, furnishing and installing the various sizes and descriptions of transformers shown on drawings and installed in the locations indicated in compliance with these specifications, all provisions of the NEC, NESC, and AE Standards as to clearances, grounding, location, local disconnects, NEMA ratings, and load balancing whether or not those things are shown in exact detail on the drawings.

Related Sections:

Section 16110 - Electrical Raceways.

Section 16450 - Grounding.

Codes and Standards: All equipment provided and the installation of dry type transformers shall comply with the applicable sections of the following codes and standards:

NEMA ST 1 - Specialty Transformers (Except General-Purpose Type).

NEMA ST 20 - Dry-Type Transformers for General Applications.

NETA ATS - (International Electrical Testing Association) Acceptance Testing Specification for Electrical Power Distribution Equipment.

NFPA 70 - National Electrical Code.

SUBMITTALS:

See Vendor Data Schedule.

Submittals include:

Product Data: Provide outline and support point dimensions of enclosures and accessories, unit weight, voltage, kVA, and impedance ratings and characteristics, tap configurations, insulation system type, and rated

temperature rise.

Test Reports: Submit test reports indicating loss data, efficiency and sound level readings at 25, 50, 75, and 100 percent rated load. Submit other test reports as identified.

Manufacturer's Installation Instructions: Indicate application conditions and limitations of use stipulated by Underwriters Laboratory, Inc. or testing firm acceptable to the authority having jurisdiction as suitable for the purpose specified and indicated. Include instructions for storage, handling, protection, examination, preparation, and installation of product.

As-Builts: Submit as-built drawings indicating actual location of transformers and transformer hook-up.

PART 2 -- PRODUCTS

MATERIALS:

Single phase transformers shall be 480 volt primary and 120/240 volt, 3-wire secondary. Three phase transformers shall be 480 volt delta primary and 208Y/120 volt Wye, 4-wire secondary.

Transformers less than 15 kVA shall have two 2.5% below rated voltage and two 2.5% above rated voltage, full capacity taps on the primary windings. Transformers 15 kVA and larger shall have winding taps in accordance with NEMA ST 20. Transformers 25 kVA and larger shall have a minimum of four 22% full capacity primary taps, two, above and two below rated voltage. Exact voltages to be designated on the drawings.

Transformers 15 kVA and below shall be Class 185 with 115 °C temperature rise and transformers 16 kVA and above shall be Class 220 with 150 °C temperature rise above ambient, 30 °C. All insulating systems shall be in accordance with NEMA Standard ST 20, factory assembled air-cooled dry type transformers.

Transformer coils shall be of the continuous wound construction and shall be impregnated with non-hydroscopic, thermosetting varnish with terminations brazed or welded.

All cores to be constructed of high grade, non-aging silicon steel with high magnetic permeability, and low hystersis and eddy current losses. Magnetic flux densities are to be kept well below the saturation point. The core laminations shall be clamped together with structural steel angles. The completed core and coil shall then be bolted to the base of the enclosure but isolated therefrom by means of rubber, vibration-absorbing mounts. There shall be no metal-to-metal contact between the core and coil and the enclosure. On transformers 500 kVA and smaller, the vibration isolating

system shall be designed to provide a permanent fastening of the core and coil to the enclosure.

Transformers 15 kVA and larger shall be in a ventilated sheet steel enclosure of a heavy gauge as described in the NEMA Standards. The ventilating openings shall be designed to prevent accidental access to live parts in accordance with UL, NEMA, and NEC standards for ventilated enclosures. Single phase transformers through 75 kVA, and three phase transformers through 45 kVA shall be designed so they can be either floor or wall mounted. Single phase transformers larger than 75 kVA and three phase transformers larger than 45 kVA shall be floor mounted design.

The entire transformer enclosure shall be de-greased, cleaned, phosphatized, primed, and finished with gray, baked enamel.
The maximum temperature of the top of the enclosure shall not exceed 50 °C rise above ambient of 30 °C.

The core of the transformer shall be visibly grounded to the enclosure by means of a flexible grounding conductor sized in accordance with applicable NEMA, IEEE, and ANSI standards.

Sound levels shall be guaranteed by the manufacturer not to exceed the following:

1 to 5 kVA:	40 dB
15 to 50 kVA:	45 dB
51 to 150 kVA:	50 dB
151 to 300 kVA:	55 dB
301 to 500 kVA:	60 dB

Basic impulse level shall be 10 kV for transformers less than 300 kVA.

The transformer shall be listed by Underwriters' Laboratory for the specified temperature rise.

PART 3 -- EXECUTION

INSTALLATION:

Install transformers as indicated on the drawings and in accordance with applicable manufacturer's written instructions, applicable requirements of NEC and National Electrical Contractors Association's "Standard of Installation," and complying with recognized industry practices to ensure that products serve intended function.

Use flexible conduit, under the provisions of Section 16110, two ft minimum length, for connections to transformer case. Make conduit connections to side panel for enclosure.

Mount wall-mounted transformers using integral flanges or accessory brackets furnished by manufacturer. Mount floor-mounted transformers on vibration isolating pads suitable for isolating the transformer noise from the building structure. All mounting brackets, seismic restraints, and similar accessories are to be supplied by the manufacturer.

Provide grounding and bonding in accordance with Section 16450.

QUALITY CONTROL TESTING:

Subcontractor Supplied Testing: Visual inspection to determine that the equipment installation conforms to NEC, these specifications, and the drawings.

Inspect and test in accordance with NETA ATS, except Section 4, and as listed in Section 7.2. Measure primary and secondary voltages and make appropriate tap adjustments.

FIELD QUALITY CONTROL:

Surveillance swill be conducted by the contractor's representative to assure compliance with the drawings and specifications.

END OF SECTION 16460

SECTION 16482 -- 480 Volt MOTOR CONTROL CENTER

PART 1 -- GENERAL

WORK DESCRIPTION:

Provide and install a 480 volt Motor Control Center of size and ratings, and containing the distribution equipment as shown on the single line diagram.

Work Included:

Work includes, but is not limited to furnishing and installing the Motor Control Center on an appropriately sized concrete housekeeping pad. MCC shall be assembled and anchored according to manufacturers instructions and recommendations.

Related Sections:

Section 16000 - General Electrical Provisions.
Section 16450 - Grounding

Codes and Standards: All equipment provided and the installed shall comply with the applicable sections of the following codes and standards:

National Electrical Manufacturers Association (NEMA):

NEMA AB 1-93	Molded Case Circuit Breakers and Molded Case Switches
NEMA ICS 2-93	Industrial Control and Systems Controllers and Overload Relays rated not more than 2000 volts AC or 750 Volts DC
NEMA ICS 2.3-83	Instructions for handling, Installation, Operation and Maintenance of Motor Control Centers
NEMA ICS 6-93	Industrial Control and Systems Enclosures

National Fire Protection Association (NFPA)

NFPA 70	National Electrical Code

Underwriters Laboratories, Inc (UL)
Electrical Construction Materials Directory, 1995

International Electrical Testing Association (NETA)

NETA ATS-95	Acceptance Testing Specifications for Electrical Power Distribution Equipment and Systems

SUBMITTALS:

See Vendor Data Schedule.

PART 2 -- PRODUCTS

MANUFACTURERS
Cutler-Hammer (EATON)
Allen-Bradley
Square D

MATERIALS:

Motor Control Center
Motor Control Center: NEMA ICS 3 Part 1, Class I, Type B
Incoming Termination: Connect to Main circuit breaker terminal lugs
Feeder Tap Units: Molded case thermal-magnetic circuit breakers, lockable using external devices.
Voltage Rating: 480 volts, three phase, four wire, 60 Hz.
Horizontal Bus: Copper with a continuous current rating of 600 amperes. Include copper ground bus entire length of control center.
Vertical Bus: Copper with a continuous current rating of 300 amperes
Instantaneous Equipment Short Circuit Rating: 65,000 amperes rms symmetrical at 480 volts.
Configuration: Units front mounting only, accessible from front only.
Incoming Line: Top feed.
Incoming Line Metering: 3 phase ammeter and voltmeter and switches
Enclosure: NEMA ICS Type 1
Wiring: NEMA Type B
Wireways: 6" min. top and bottom; vertical 4" wide, full depth with hinged door
Automatic Controllers
Magnetic Motor Controllers: NEMA ICS 2, AC general-purpose Class A magnetic controller, lockable using external devices.
Coil Operating Voltage: 120 volts, 60 Hertz
Overload Relay: NEMA ICS 2, bimetal.

Magnetic Circuit Breakers: NEMA AB 1, circuit breakers with integral instantaneous magnetic trip in each pole.

Accessories
Auxiliary Contacts: NEMA ICS 2, two each normally open field convertible contacts in each controller in addition to seal-in contact.
Cover mounted Pilot Devices: NEMA ICS 2 standard duty oiltight type.
Pilot Device Contacts: NEMA ICS 2, Form Z, rated 10 amps.
Indicating Lights: Transformer type, Red for running.
Selector Switches: Rotary type, on-off or hand-off-auto, maintained contact
Control Power Transformers: 120 volt secondary, 50 va minimum, in each motor starter. Provide fused primary and secondary of transformer, and ground unfused leg of secondary to enclosure.
Cubicle Isolation: Each MCC cubicle shall have an externally operable handle lockable in the OFF position

PART 3 -- EXECUTION

INSTALLATION:
Install MCC in accordance with manufacturers instructions.
Tighten accessible bus connections and mechanical fasteners after placing MCC.
Select and install heater elements in motor starters to match installed motor characteristics.
Provide engraved plastic nameplates, white with black core, with self-tapping screws.
Cubicle Data: Provide neatly typed label inside each cubicle door, identifying load served, nameplate horsepower, full load amps, code letter, service factor, and voltage/phase rating.
Anchor MCC to pad and floor slab using concrete expansion anchors and bolts according to manufacturers instructions.

Labeling: Motor Control Center labeling shall be in accordance with section 16000.

QUALITY CONTROL TESTING:

Subcontractor Supplied Testing: Visual inspection to determine that equipment installed conforms to NEC, these specifications, and the drawings.
Inspect and test each MCC and each controller to NEMA ICS 2.3 and NETA ATS.

FIELD QUALITY CONTROL:

Surveillance will be conducted by the contractor's representative to assure compliance of the work with the drawings and specifications.

END OF SECTION 16482

SECTION 16500 -- LIGHTING

PART 1 -- GENERAL

WORK DESCRIPTION:

Provide and install lighting fixtures of sizes, ratings, and types as shown on the drawings. Provide complete lighting system consisting of lamps, lampholders, reflectors, ballasts, starters, and wiring.

Work Included:

Work includes, but is not limited to, furnishing and installing the interior and exterior lighting system as shown on drawings and specifications including the lamps, lampholders, reflectors, ballasts, starters, wiring, emergency lighting units, exit signs, and other components and accessories needed for a complete system.

Related Sections:

16109 - Switches, Receptacles, and Wall Plates.

16110 - Electrical Raceways.

16120 - Cable Wire, Connectors, and Miscellaneous Devices.

16450 - Grounding.

Codes and Standards: All equipment provided and the installation of lighting shall comply with the applicable sections of the following codes and standards:

ANSI C78.379 - Electric Lamps - Incandescent and high-Intensity Discharge Reflector Lamps - Classification of Beam Patterns.

ANSI C82.1 - Ballasts for Fluorescent Lamps - Specification.

ANSI C82.4 - Ballasts for High-Intensity Discharge and Low Pressure Sodium Lamps (Multiple Supply Type).

ANSI/IES RP-7 - Practice for Industrial lighting.

IES Lighting Handbook.

NEMA WD 6 - Wiring Devices-Dimensional Requirements.

NFPA 70 - National Electrical Code.

NFPA 101 - Life Safety Code.

SUBMITTALS:

See Vendor Data Schedule.

Submittals include:

Shop Drawings: Indicate dimensions and components for each luminary that is not a standard product of the manufacturer.

Product Data: Provide dimensions, ratings, and performance data.

Manufacturer's Installation Instructions: Indicate applicable conditions and limitations of use stipulated by Underwriters laboratory, Inc. or testing firm acceptable to the authority having jurisdiction as suitable for purpose specified and indicated. Include instructions for storage, handling, protection, examination, preparation, and installation of each product.

Operation and Maintenance: Submit manufacturer's operation and maintenance instructions for each product.

Test Report: Measure and document the illumination levels for the middle of the facility, at the walls of the facility, and the external perimeter five ft from the facility walls.

PART 2 -- PRODUCTS

MATERIALS:

Ballasts: All ballasts shall be of the high-power factor, high efficiency, class P type, suitable to light in cold weather, and their design and construction shall conform to Certified Ballast Manufacturer's Standards. Ballasts shall be non-asphaltic thermosetting compound compatible with any contaminated fluid. Ballasts shall not contain polychlorinated biphenyls (PCBs) and shall be maximum sound level B. Ballast for fluorescent lamps shall conform to ANSI C82.1, ballast for low pressure sodium (exterior lamps) shall conform to ANSI C82.4.

Fixtures: Interior lamps and fixtures shall be two bulb, 32 W, 120 V fluorescent and facility exterior lamps and fixtures (at the access doors)shall be 60 W low pressure sodium vapor lamps. Provide low-temperature ballast suitable for the lamp specified.

All fluorescent fixtures shall be wired from outlet boxes with No. 12 AWG, Type CF fixture or Type THHN wire.

All low pressure sodium vapor, exterior, fixtures shall be wired from sealed outlet boxes with No. 12 AWG THHN wire. Fixtures shall be area flood type,

clear glass covers with gasketing between frame and luminary body. Mounting shall be at the eaves on the exterior of the building.

Emergency Lighting Units: Emergency lighting units shall be self-contained fluorescent units. The battery shall be 12 volt, lead calcium type with 1.5 hour capacity. The battery charger shall be a dual-rate type with sufficient capacity to recharge a discharged battery to full charge within twelve hours. The lamps shall be instant start compact fluorescent. Each unit shall be equipped with indicating lights to indicate AC ON and RECHARGING. The units shall be furnished with a test switch that transfers from external power supply to integral battery supply. The electrical connection shall be conduit. External power shall be 120 VAC.

Exit Signs: The exit sign fixture shall be suitable for use as an emergency lighting unit and may be of the light emitting diode (LED) type. The face shall be translucent plastic with red letters on a white background. Directional arrows and mounting shall be Universal type for field adjustment. Lamps shall be manufacturer's standard. The battery, battery charger, test switch, and external power shall be as described above.

PART 3 -- EXECUTION

INSTALLATION:

Install lighting fixtures of types and ratings as indicated on the drawings and in accordance with manufacturer's written instructions, applicable requirements of NEC and the National Electrical Contractors Association's "Standards of Installation," and complying with recognized industry practices to ensure that the products serve their intended functions.

Provide and install all fixtures, lamps, and tubes of the types and wattages indicated along with the necessary equipment for supporting the hanging of all light fixtures. Fasten fixtures securely to indicated structural support members of the building per UCB Seismic Zone 2b requirements with Importance Factor of 2.0; ensure all pendent fixtures are plumb.

Install suspended fixtures and exit signs using pendants supported from swivel hangers. Provide pendant length required to suspend fixtures at indicated height.

Bond products and metal accessories to branch circuit equipment grounding conductor.

ADJUST AND CLEAN:

Clean lighting fixtures of dirt and debris upon completion of installation.

Aim and adjust luminaries to provide illumination levels and distribution as directed.

Protect installed fixtures from damage during the remainder of the construction.

QUALITY CONTROL TESTING:

Subcontractor Supplied Testing: Upon completion of installation of lighting fixtures, and after building circuitry has been energized, apply electrical energy to demonstrate lighting capability and compliance with requirements. Replace bulbs or tubes that are noticeably dim, correct malfunctioning units at site, then retest to demonstrate compliance; otherwise, remove and replace with new units, and proceed with re-testing.

Measure and record the illumination levels. Take measurements during night sky, without moon or with heavy overcast clouds effectively obscuring moon.

FIELD QUALITY CONTROL:

Surveillances will be conducted by the contractor's representative to assure compliance with the drawings and specifications.

END OF SECTION 16500

SECTION 16855 - HEATING CABLES

PART 1 -- GENERAL

WORK DESCRIPTION:

Provide and install Heat Tracing for pipe and any other outdoor equipment requiring freeze protecting with outside temperature at -30 degrees F. Pipes and other outdoor equipment to be protected are indicated on the contract drawings.

Work Included:

Work includes, but is not limited to, design and installation of the heat trace system as well as products and execution herein specified.

Related Sections:

16110 - Electrical Raceways.

16120 - Cable Wire, Connectors, and Miscellaneous Devices.

16450 - Grounding.

Codes and Standards: All equipment provided and the installation of heat trace cables shall comply with the applicable sections of the following codes and standards:
NFPA 70 - National Electrical Code.

NEMA ICS 6-93 Industrial controls and systems enclosures

Underwriters Laboratories, Inc (UL):
Electrical Construction Materials Directory-96

SUBMITTALS:

See Vendor Data Schedule.

PART 2 -- PRODUCTS

MANUFACTURERS

Acceptable Manufacturers:
- Raychem
- Chromalox
- Thermon

MATERIALS:

Heating Cable: Self-limiting, parallel, resistance electric tracing cable with grounding shield around conductors. Maximum output temperature is 150 degrees F.

ACCESSORIES

Thermostat: Type 4X according to NEMA ICS 6, adjustable setpoint, suitable for -30 degrees F to 140 degrees F.

Pilot light: Red

Power Termination kits, splice kits, tee kits, and end seals shall be utilized. Provide stainless steel identification tags for all devices. Include assembly and circuit numbers.

PART 3 -- EXECUTION

INSTALLATION:

Verify that the piping system is complete, tested and ready for heating equipment.

Verify routing shown on drawings. Where installation differs from drawings, subcontractor shall annote drawings.

Verify that required utilities are available, in proper locations, and ready for use.

Follow these guidelines for cable wattage and maximum circuit length, or provide supplier information to support alternate lengths:

Cable Wattage	Max. Length Feet (20A, 120V)	Max. Length Feet (20A, 277V)	Max. Length Feet (30A, 277V)	Max.Length Feet (40A, 277V)
3 watts / ft	265	410	615	710
5 watts / ft	185	310	465	500
8 watts / ft	130	230	340	465
10 watts / ft	105	175	260	395

Install heat trace material on piping system as indicated on drawings in accordance with manufacturer's instructions and NFPA 70.

Install to allow heat trace cable to be moved aside during maintenance of piping system.

Avoid pinching or making sharp bends in cable.

Prevent damage by sharp objects during installation.

Do not install electric tracing cables across expansion joints.

All electric trace cables shall be installed in the 7 and 8 o'clock positions or in the 4 and 5 o'clock positions on horizontal runs of pipes.

Accurately record actual locations of heating cable, thermostats, and branch circuit connections.

QUALITY CONTROL TESTING:

Subcontractor Supplied Testing:
Test continuity of heating cable.

Measure insulation resistance to manufacturer's recommended values. Use test instruments in accordance with manufacturer's instructions.

Perform continuity and insulation resistance tests on completed cable installation prior to installation of thermal insulation.

Measure voltage and current at each unit.

FIELD QUALITY CONTROL:

Surveillances will be conducted by the contractor's representative to assure compliance with the drawings and specifications.

END OF SECTION 16855

Appendix C

Calculations and Analysis

Appendix C

Calculations and Analysis Index

NPTF 1-07B-01	Air Emissions of TCE
NPTF 1-07B-02	NPTF Building Heating Load
NPTF 1-07B-03	Using Outside Air Supply for Air Stripper Units
NPTF 1-07B-04	NPTF Hydraulic Calculations
NPTF 1-07B-05	Thrust Block Size
NPTF 1-07B-06	Stripper Discharge Piping Support
NPTF 1-07B-07	Pipe Stress Analysis
NPTF 1-07B-08	Duct Design for Air Stripper Blower Supply Ductwork
NPTF 1-07B-09	Fire Hazard Analysis

PARSONS **Calculation Number** OU 1-07B NPTF - 01

Rev	By	Date	CK	Date	Title AIR EMISSIONS OF TCE
0	AJC	8/26/98	[illegible]	9/2/98	
					Author AL CRAM, 8/11/98 Sheet 1 Of 1

REQUIRED:

DETERMINE LBS/Hr OF TCE DISCHARGED FROM AIR STRIPPERS

GIVEN:

WATER w/ CONCENTRATION OF 1100 µg/L TCE WILL BE RUN THRU STRIPPERS @ 250 GPM. DISCHARGE LIMIT OF OU 1-07B ROD IS 0.185 LBS/Hr.

ASSUMPTIONS:

1) ALL TCE WILL BE STRIPPED FROM WATER

SOLUTION:

$$LB/Hr = \left(250\ GAL/MIN\right)\left(\frac{60\ MIN}{Hr}\right)\left(1100\ \mu g/L\right)\left(\frac{3.785\ L}{GAL}\right)\left(\frac{LB}{453 \times 10^{+6}\ \mu g}\right)$$

$$(2.5\times10^{2})(60)(1.1\times10^{3})(3.785)/4.53\times10^{8} = 137.9\times10^{10^{-3}}\ LB/Hr$$

$$= .138\ LB/Hr$$ IS LESS THAN 0.185 LB/Hr

OK

PARSONS **Calculation Number** NPTF 1-07B-02

Rev	By	Date	CK	Date	Title
0			AJC	4/26/88	NPTF BUILDING HEATING LOAD
					Author G. MECHAM — Sheet 1 Of 6

GIVEN:

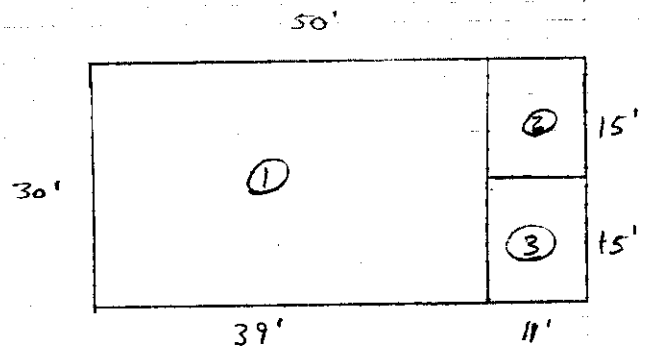

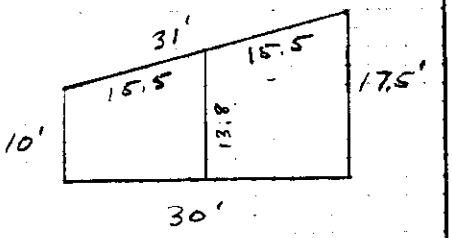

ZONE 1 - PROCESS ROOM
ZONE 2 - STORAGE ROOM
ZONE 3 - ELECTRICAL ROOM

INDOOR DESIGN TEMP (T_i): 65°F $\Delta T = 84°F$
OUTDOOR DESIGN TEMP (T_o): -19°F

ASSUMPTIONS:
- EXTERIOR WALLS HAVE R-VALUE OF AT LEAST 14
- CEILINGS HAVE R-VALUE OF AT LEAST 20
- MOTORS DO NOT CONTRIBUTE SIGNIFICANT HEAT GAIN
- BLOWERS USE OUTSIDE AIR SUPPLY

$$Q_{TOTAL} = Q_{WALL} + Q_{ROOF} + Q_{GLASS} + Q_{PARTITION} + Q_{FLOOR} + Q_{DOOR} + Q_{INFIL.}$$

<u>Walls</u>

$$Q_W = UA(T_i - T_o) \qquad U = \frac{1}{R} = \frac{1}{14} = 0.0714$$

Zone ①

$$A_① = A_1 + A_2 + A_3$$

$$A_1 = (10)(39) = 390\ ft^2$$

$$A_2 = (10)(30) + \tfrac{1}{2}(7.5)(30) = 412.5\ ft^2$$

$$A_3 = (17.5)(39) = 682.5\ ft^2$$

$$A_① = 390 + 412.5 + 682.5 = 1485\ ft^2$$

$$Q_{W①} = (.0714)(1485)(65-(-19))$$

$$Q_{W①} = 8910\ BTU/hr$$

Zone ②

$$A_② = A_1 + A_2$$

$$A_1 = (17.5)(11) = 192.5\ ft^2$$

$$A_2 = (15)(13.8) + \tfrac{1}{2}(15)(3.7) = 234.75\ ft^2$$

$$A_② = 192.5 + 234.75 = 427.25\ ft^2$$

$$Q_{W②} = (.0714)(427.3)(65-{}^{-}19)$$

$$Q_{W②} = 2563\ BTU/hr$$

Zone ③

$$A_③ = A_1 + A_2$$

$$A_1 = (11)(10) = 110\ ft^2$$

$$A_2 = (15)(10) + \tfrac{1}{2}(15)(3.8) = 178.5\ ft^2$$

$$A_③ = 110 + 178.5 = 288.5\ ft^2$$

$$Q_{W③} = (.0714)(288.5)(84)$$

$$Q_{W③} = 1730\ BTU/hr$$

ROOF

$$Q_R = U A (T_i - T_o)$$

ZONE ①

$A_1 = (31)(39) = 1209\ ft^2$

$U = \frac{1}{20} = 0.05$

$Q_{R①} = (0.05)(1209)(84)$

$Q_{R①} = 5077.8$ BTU/hr

ZONE ②

$A_2 = (15.5)(11) = 170.5\ ft^2$

$Q_{R②} = (.05)(170.5)(84)$

$Q_{R②} = 716.1$ BTU/hr

ZONE ③

$A_3 = (15.5)(11) = 170.5\ ft^2$

$Q_{R③} = (.05)(170.5)(84)$

$Q_{R③} = 716.1$ BTU/hr

NO EXTERIOR WINDOWS ∴ $Q_{GLASS} = 0$

EACH ZONE WILL BE AT SAME TEMP ∴ $Q_{PART.} = 0$

FLOOR

$$Q_F = U' P (T_i - T_o)$$

ASSUME CONCRETE HAS PERIMETER INSULATION WITH $R = 5.4$ AND USING A METAL STUD WALL.

$U' = 0.53 \frac{BTU}{H \cdot FT \cdot °F}$, FROM ASHRAE COOLING + HEATING LOAD CALCULATION MANUAL, TABLE 4.11

ZONE ①

$P = 2(39) + 1(30) = 108$ ft

$Q_F = (.53)(108)(84)$

$Q_{F①} = 4808.2$ BTU/hr

ZONE ②

$P = 1(15) + 1(11) = 26$ ft

$Q_F = (.53)(26)(84)$

$Q_F = 1157.5$ BTU/hr

ZONE ③

$P = 1(11) + 1(15) = 26$ ft

$Q_F = (.53)(26)(84)$

$Q_F = 1157.5$ BTU/hr

DOORS

$Q_D = U A (T_i - T_o)$

ASSUMING ALL DOORS ARE COMENSURATE WITH A 1 3/4" STEEL DOOR WITH POLYSTYRENE CORE

$U = 0.35$ BTU/hr · ft² · °F ASHRAE MANUAL TABLE 4.6

ZONE ① $A = (10)(12) + (6)(7) = 162$ ft²

$Q_D = (.35)(162)(84)$

$Q_{D①} = 4762.8$ BTU/hr

ZONE ② $A = (8)(12) + (3)(7) = 117$ ft²

$Q_D = (.35)(117)(84)$

$Q_{D②} = 3439.8$ BTU/hr

ZONE ③ $A = (3)(7) = 21$ ft²

$Q_D = (.35)(21)(84)$

$Q_{D③} = 617.4$ BTU/hr

PARSONS **Calculation Number** NPTF 1-07B-02

Rev	By	Date	CK	Date	Title
					Author — Sheet 5 Of 6

INFILTRATION

$$Q_I = 1.08\ CFM\ (T_i - T_o)$$

THE CFM BASED ON OCCUPANCY (0-2 people) USING 15 CFM / PERSON IS ONLY 0 TO 30 CFM.

THEREFORE, THE CFM REQUIREMENT WILL BE BASED ON THE NEED TO BE ABLE TO CLEAN OUT ANY AIR BORN CONTAMINANTS FROM THE FACILITY FAIRLY QUICKLY.

CFM IS BASED ON BEING ABLE TO PROVIDE 1.5 AIR CHANGES PER HOUR.

ZONE 1

$$A = (30)(39)(10) + \tfrac{1}{2}(30)(7.5)(39) = 16087\ ft^3$$

$$CFM = (16087\ ft^3)\left(\frac{1.5\ \text{CHANGES}}{\text{HOUR}}\right)\left(\frac{1\ \text{HOUR}}{60\ \text{MIN}}\right)$$

$$CFM = 402\ \frac{ft^3}{min}$$

$$Q_I = 1.08(402)(84)$$

$$Q_{I1} = 36469\ BTU/hr$$

ZONE 2

$$A = (15)(11)(13.8) + \tfrac{1}{2}(3.7)(15)(11) = 2582.3\ ft^3$$

$$CFM = \frac{2582.3\ (1.5)}{60} = 64.6$$

$$Q_{I2} = (1.08)(64.6)(84)$$

$$Q_{I2} = 5860.5\ BTU/hr$$

ZONE 3

$$A = (11)(15)(10) + \tfrac{1}{2}(3.8)(15)(11) = 1963.5\ ft^3$$

$$CFM = \frac{1963.5\ (1.5)}{60} = 49$$

$$Q_I = (1.08)(49)(84)$$

$$Q_{I3} = 4445.3\ BTU/hr$$

PARSONS **Calculation Number** NPTF 1-07B-02

Rev	By	Date	CK	Date	Title
					Author — Sheet 6 Of 6

TOTAL HEAT LOADS

ZONE ①

$$Q_T = \underset{\text{WALL}}{8910} + \underset{\text{ROOF}}{5077.8} + \underset{\text{FLOOR}}{4808.2} + \underset{\text{DOORS}}{4762.8} + \underset{\text{Air changes}}{36469}$$

$$Q_{T①} = 60{,}028 \text{ BTU/hr}$$

ZONE ②

$$Q_T = 2563 + 716.1 + 1157.5 + 3439.8 + 5860.5$$

$$Q_{T②} = 13{,}737 \text{ BTU/hr}$$

ZONE ③

$$Q_T = 1730 + 716.1 + 1157.5 + 617.4 + 4445.3$$

$$Q_{T③} = 8666.3 \text{ BTU/hr}$$

HEATER REQUIREMENTS

ZONE ①

$$\left(60\,028 \frac{BTU}{hr}\right)\left(\frac{.293\,W}{BTU/hr}\right) = 17\,588 \text{ W} \approx 18 \text{ KW}$$

USE FOUR 5 KW HEATERS

ZONE ②

$$\left(13\,737 \frac{BTU}{hr}\right)\left(\frac{.293\,W}{BTU/hr}\right) = 4025 \text{ W} \approx 4 \text{ KW}$$

USE ONE 5KW HEATER

ZONE ③

$$\left(8666.3 \frac{BTU}{hr}\right)\left(\frac{.293\,W}{BTU/hr}\right) = 2539 \text{ W} \approx 2.5 \text{ KW}$$

USE ONE 5KW HEATER

PARSONS

Calculation Number NPTF 1-07B-03

Rev	By	Date	CK	Date	Title USING OUTSIDE AIR SUPPLY FOR AIR STRIPPER UNITS
			AJC	9/2/98	
					Author AL CRAM 8/21/98 Sheet 1 Of 4

REQUIRED: DETERMINE IF USING OUTSIDE AIR SUPPLY IN WINTER (-40°F) WILL FREEZE WATER IN AIR STRIPPER

SOLN:

SEE ATTACHED LETTER AND CALC FROM NORTH EAST ENVIRONMENTAL PRODUCTS DATED 8/20/98.

CALC. NO. NPTF 1-078 SH 2 OF 4

NEEP Systems™
environmental technologies
North East Environmental Products, Inc.
17 Technology Drive West Lebanon, NH 03784
603-298-7061 Fax: 603-298-7063

August 20, 1998

Mr. Al Cram
Parsons I&T Company
PO Box 1625 - MS #3954
200 South Woodruff Ave.
Idaho Falls, ID 83415

RE: Air Stripper Freezing

Dear Mr. Cram,

Attached are a series of heat transfer calculations regarding the freezing potential of a Model 3641 ShallowTray air stripper.

The conclusion that can be drawn from the calculations is that there is not nearly enough cooling capacity in the stripping air to freeze the water flowing through the air stripper. In order for the water to freeze, the heat capacity of the water must first be removed and then the latent heat of solidification must be removed. In this case, the mass of air , even at -40°F, will not be able to remove enough heat from the water to lower the temperature to the freezing point. In fact, the effluent water temperature will be only about 1.17 °F cooler than the influent temperature.

There are however, two conditions under which the stripper might freeze. First, if the stripper is installed outdoors, the cold wind blowing on the stripper could cause localized freezing. If the wind continued for a long time it is conceivable that the stripper could freeze significantly.

Second, if the water flow is shut off, but the air blower is not, the water left on the aeration trays could freeze. The air blower on our systems has a timer as part of the control system that will shut off the blower 2 minutes after the well pumps shut off. This will prevent this freezing situation.

I hope this information addresses your concerns.

Sincerely,

Bruce L. Lamarre

Bruce L. Lamarre,
Chief Technical Officer

Question: Will a model 3641 freeze @ 125 GPM water flow rate and 900 CFM air flow rate @ a water temperature of 55°F and minimum air temperature of -40°F

1. Heat capacity in water from 55°F to 32°F

$$Q_w = m\,c_p\,\Delta T = 125\,\frac{gal}{min}\,60\,\frac{min}{hr}\,8.34\,\frac{lb}{gal}\,1\,\frac{BTU}{lb\,°F}\,(55-32)\,°F$$

$$= 1{,}438{,}650\ \frac{BTU}{hr}$$

2. Heat capacity in air from -40°F to 32°F

$$Q_a = 900\,\frac{ft^3}{min}\,60\,\frac{min}{hr}\,.075\,\frac{lb}{ft^3}\,.25\,\frac{BTU}{lb\,°F}\,(32-(-40))\,°F$$

$$= 72900\ \frac{BTU}{hr}$$

Therefore, since the heat capacity of the air is much smaller than the heat capacity of the water, the water will not freeze

3. Calculate water temperature reduction

$$T_2 = T_1 - \frac{Q}{m c_p} = 55°F - \frac{72900\ \frac{BTU}{hr}}{125\,\frac{gal}{min}\,60\,\frac{min}{hr}\,8.34\,\frac{lb}{gal}\,1\,\frac{BTU}{lb\,°F}}$$

$$= 55 - 1.17 = 53.83\,°F$$

$$\therefore \dot{m} = \frac{Q}{c_p \Delta T} = \frac{72{,}900 \frac{BTU}{hr}}{1 \frac{BTU}{°F\,lb} (55-32)°F} = 3170 \frac{lb}{hr}$$

$$= 6.3 \frac{gal}{min}$$

$\therefore$ at a water flow rate of 6.3 gpm the stripper will begin to freeze the water. Note: it takes considerably more cooling to freeze the water.

$$\left(3170 \, LB/hr\right)\left(\frac{1 \, Hr}{60 \, min}\right)\left(\frac{1 \, GAL}{8.34 \, LB}\right) = 6.33 \, GAL/MIN$$

PARSONS **Calculation Number** NPTF 1-07B - 04

Rev	By	Date	CK	Date	Title
			[illegible]	9/25/98	NPTF HYDRAULIC CALCULALATIONS
1	AJC	2/15/99	[illegible]	3/25/99	
					Author AL CRAM 8/25/98 Sheet 1 Of 7

REQ'D; DETERMINE PRESSURE DROPS AND HEAD PRESSURES FOR SIZING OF PUMPS AND CONTROL VALVES

GIVEN: LINE SIZES AS SHOWN ON PFD-1
BUILDING AND PIPING LAYOUT AS SHOWN ON P-2 YARD PIPING PLAN

SOLUTION

1) DETERMINE HEAD REQUIRED FOR WELL PUMPS

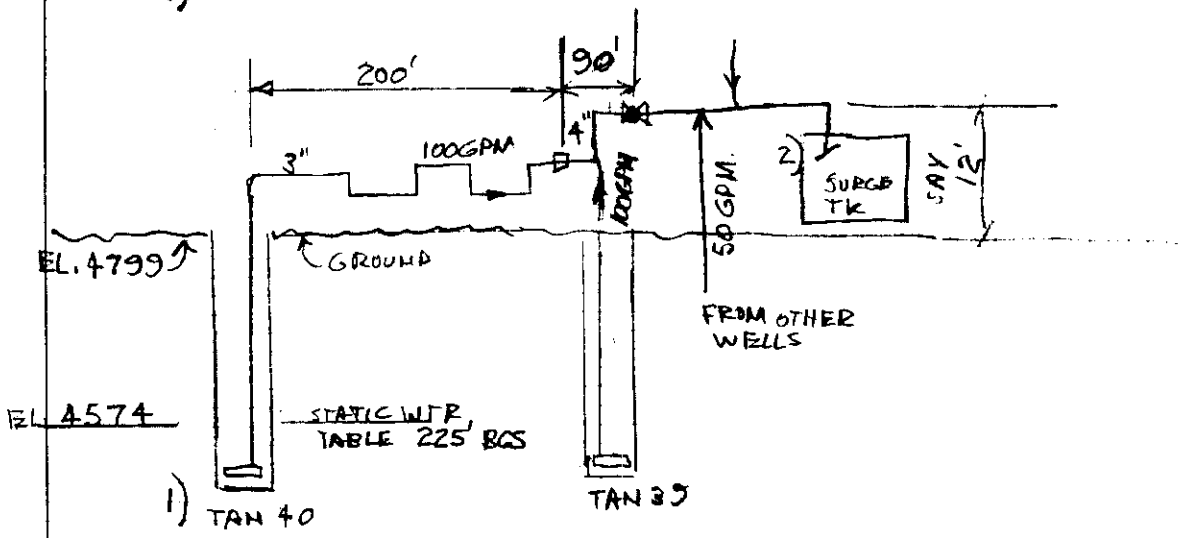

USING BERNOULLI'S THEOREM

$$Z_1 + \frac{144\,P_1}{\rho_1} + \frac{V_1^2}{2g} = Z_2 + \frac{144\,P_2}{\rho_2} + \frac{V_2^2}{2g} + h_L$$

$\rho_1 = \rho_2$

Z_1 = STATIC WATER LEVEL = -225 FT

Z_2 = EL. OF PIPE @ SURGE TK = +12'

$$P_1 - P_2 = \frac{\rho}{144}\left((Z_2 - Z_1) + \frac{V_2^2 - V_1^2}{2g} + h_L\right)$$

V_1 = 4.34 FT/SEC, FOR 100 GPM IN 3" LINE

V_2 = 5.04 FT/SEC, FOR 200 GPM IN 4" LINE

PARSONS Calculation Number NPTF 1-078 - 04

Rev	By	Date	CK	Date	Title
					Author Sheet 2 Of 7

1) CONT'D

$$\Delta P = \frac{62.4\ LB/FT^3}{144\ IN^2/FT^2}\left((12' + 225') + \frac{5.04^2 - 4.34^2}{64.4\ FT/SEC^2} + h_L\right)$$

.433

$$\Delta P = .433(237\ FT + 0.10 + h_L)$$

CALCULATE h_L TOTAL,

h_L FOR PIPE, SAY 200' OF 3" PIPE
90' OF 4" PIPE

EQ LENGTH OF PIPE FOR FITTINGS & VALVES;
USING PARSONS DESIGN GUIDE DSG-MP-6A

6 EA 90° ELL @ 3.4' = 20.4'

1 SUDDEN ENLARGEMENT (REDUCER) = 4'

1 TEE, FLOW W/ RUN = 7' (4" PIPE)

2 EA 90° ELL @ 4 = 8' (4" PIPE)

1 EA GLOBE @ = 112' (4" PIPE)

1 TEE, FLOW W/ BRANCH = 20' (4" PIPE)

1 OPEN END, $h_L = \frac{0.00259\ KQ^2}{d^4}$, EQ 3-14, CRANE TECH PAPER 410

WHERE
$Q = 250$ GPM
$K = 1$, FROM PAPER NO. 410, PG A-29
$d^4 = 262\ IN^4$ FOR 4" PIPE

$$h_L = \frac{0.00259(1)(6.25 \times 10^4)}{262} = 0.6\ FT$$

100 GPM IN 3" PIPE

ΔP FOR 3" PIPE = (200' PIPE + 24' FITTINGS)(1.05 PSI/100 FT) = 2.35 PSI

250 GPM IN 4" PIPE

ΔP FOR 4" PIPE = (90' PIPE + 148' FITTINGS)(1.46 PSI/100 FT) = 3.46 PSI

h_L TOTAL PIPE & FITTINGS = (3.46 PSI)(2.31 FT/PSI) = 8 FT.

$$\Delta P = .433(237\ FT + 0.10 + 8\ FT) = 106\ PSI$$

WELL PUMPS TO BE SIZED FOR 100 GPM @ 245 FT HEAD (MIN)

2) DETERMINE NPSH AVAILABLE TO AIR STRIPPER FEED PUMPS

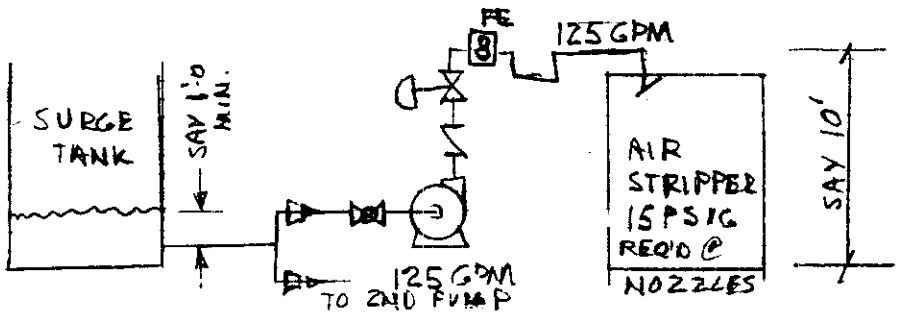

$h_{sv} = h_{psa} + h_{ss} - h_{fs} - h_{vpa}$ Equation 5.2, FROM "PUMP ENGINEERING MANUAL", THE DURIRON CO., INC. 1980, PG. 66

WHERE h_{sv} = AVAILABLE NET POSITIVE SUCTION HEAD IN FT OF LIQUID

h_{PSA} = SUCTION PRESSURE ABSOLUTE

$= (12.2\ PSIA)(2.31\ FT/PSI) = 28.2\ FT$

h_{ss} = STATIC SUCTION HEAD = 6" ABOVE PUMP SUCTION

$= 0.5\ FT$

h_{fs} = FRICTION HEAD LOSS BETWEEN TANK + PUMP SUCTION

$= \frac{V_2^2 - V_1^2}{2g} + h_L$ FROM FRICTION, $V_2 = 6.30\ FT/SEC$, 250 GPM IN 4" PIPE, $V_1 = 0$, IN TANK

$$\frac{V_2^2 - V_1^2}{2g} = \frac{(6.3)^2 - 0}{64.4} = 0.6\ FT$$

h_L FITTINGS = 6' OF 3" PIPE
.1 FT HEAD
20' EQ LENGTH, TEE
3', 2 90° ELL'S
4', BALL VALVE

h_L FITTINGS = (33 FT PIPE EQ)$\left(\frac{1.0\ PSI}{100\ FT}\right)$ + .1 FT

$= (.61)(2.31\ FT/PSI) + .1\ FT$

$= 1.5\ FT$

$h_{FS} = 0.6\ FT + 1.5\ FT = 2.1\ FT$

PARSONS Calculation Number NPTF 1-07B - 04

Rev	By	Date	CK	Date	Title
					Author Sheet 4 Of 7

2) CONT'D

h_{VPA} = VAPOR PRESS OF LIQUID, ABSOLUTE = 0.4 FT @ 50°F (IBID, TABLE 1)

h_{SV}, AVAILABLE SUCTION HEAD = 28.2 FT + 0.5 FT − 2.1 FT − 0.4 FT
= 26.2 FT

3) DETERMINE HEAD REQUIRED FOR SIZING AIR STRIPPER FEED PUMPS.

USE DIAGRAM OF 2) ABOVE

$h_{REQUIRED}$ = $h_{L\,THRU}$ PIPING + 15 PSI @ STRIPPER NOZZLES

h_L PIPING = 20 FT PIPE
5 EA 90° ELL @ 3.5 EQ FT = 17.5
1 CK VALVE @ 23' = 23
1 FLOW ELEMENT @ 20' = 20
80.5 FT TOTAL LENGTH

1-2" CONTROL VALVE, LESLIE ROTARY PLUG $C_V \approx 35$ @60% OPEN △1 $\Delta P = \left(\frac{Q}{C_V}\right)^2 \frac{P}{62.4}$
(EQ 3-16, CRANE TECH PAPER 410)

$\Delta P = \left(\frac{125\ GPM}{35}\right)^2 \left(\frac{1}{1}\right) = 12.75$ PSI

h_L PIPING = (80.5 FT ~~2" PIPE~~ → 9.5 PSI)(11.76 PSI/100') + 13 PSI

$h_{REQUIRED}$ = 13 PSI + 15 PSI = 28 PSI

SIZE STRIPPER FEED PUMPS FOR 125 GPM @ ~~28 PSI~~ 65 FT HEAD

USE PEERLESS MODEL C1020 AM, 9" IMPELLER, 5HP, ~~70 FT~~ 30.3 PSI @ 125 GPM
V-307 MAX INLET PRESS = 75 FT HEAD = 33 PSI
" NORM " " = 30.3 PSI
" ΔP, SIZING = 13 PSI @ 125 GPM, 60% OPEN

△1

PARSONS **Calculation Number** NPTF 1-07B -04

Rev	By	Date	CK	Date	Title
					Author — Sheet 5 Of 7

4) DETERMINE AVAILABLE NPSH FOR AIR STRIPPER DISCHARGE PUMPS.

$$h_{SV} = h_{PSA} + h_{SS} - h_{FS} - h_{VPa}$$

h_{SV} = AVAILABLE NET POSITIVE SUCTION HEAD (FT OF LIQUID)

h_{PSA} = SUCTION PRESSURE ABSOLUTE = 12.2 PSIa @ 5000 FT EL.
$= (12.2\ PSI)(2.31\ FT/PSI) = 28.2\ FT$

h_{SS} = STATIC SUCTION HEAD = .5 FT + ~~1" H2O~~ NEGLECT AIR PRESS
= .5 FT

h_{FS} = FRICTION HEAD BETWEEN TANK & PUMP SUCTION

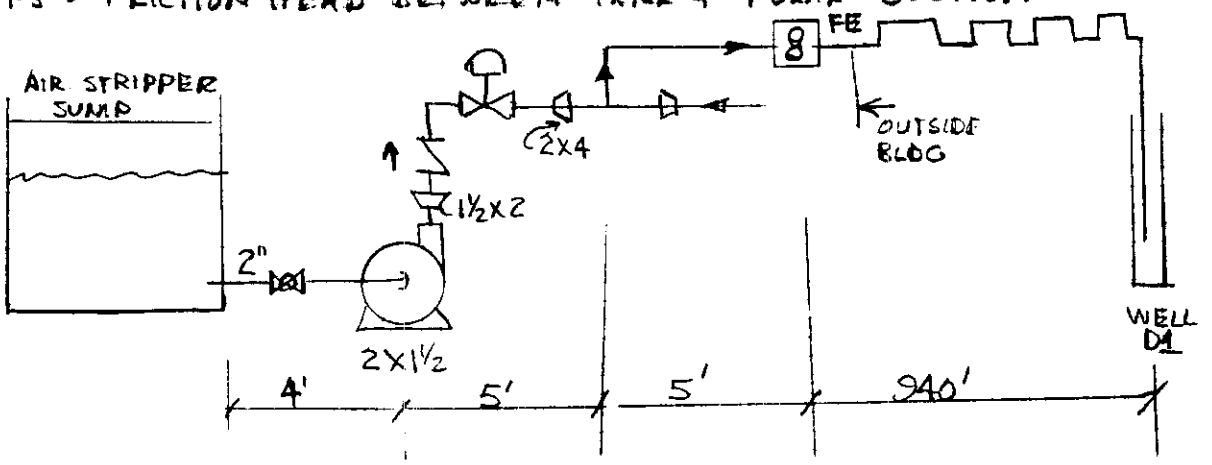

SUDDEN ENTRANCE K = 0.78, EQ LENGTH L = KD/f
WHERE f = 0.019, D = 0.172 FT L = 0.78(0.172)/.019
L = 7 FT

BALL VALVE, EQ LENGTH = 3 FT

2 EA 90° ELL @ 3.5' = 7 FT

2" PIPE = 3 FT

$$h_{FS} = \frac{V_2^2 - V_1^2}{2g} + h_L; \quad \frac{V_2^2 - V_1^2}{2g} = \frac{(11.97\ FT/SEC)^2 - (0)^2}{64.4} = 2.22\ FT$$

$$h_L = 20\ FT\left(\frac{11.76\ PSI}{100\ FT}\right) = 2.35\ PSI = 5.43\ FT$$

4) CONT'D

h_{FS} = 2.22 FT + 5.43 FT = 7.65 FT

h_{VPa} = VAPOR PRESS OF LIQUID = 0.4 PSI @ 50°F

h_{SV} = 28.2 FT + 0.5 FT − 5.43 FT − 0.4 FT = **22.9 FT** ←

5) DETERMINE HEAD REQUIRED FOR DISCHARGE PUMPS AND C_V REQUIRED FOR DISCHARGE LINES. USE SKETCH FOR 4) ABOVE

h_L, 2" PIPE

	EQ LENGTH
1 EA. 1½ X 2" RED. (DSG-MP-6A)	2.2'
1 EA 2" SWING CK	23'
1 EA CONTROL VLV, CALCULATE BELOW	
1 EA. 2X4" RED, (DSG-MP-6A)	4'
2" PIPE	4'
TOTAL LENGTH, 2"-125 GPM :	33.2'

h_L, 2" PIPE w/o CONTROL VLV = $33.2\left(\frac{11.76\ PSI}{100'}\right)$ = **3.9 PSI**

CRANE PAPER 410, PG. B-14

h_L, 4" PIPE

1 EA 4" TEE, FLOW W/ BRANCH	20'
1 EA 4" FLOWMETER @ 20'	20'
18 EA 4" 90° ELL @ 4'	72'
1 EA. 4" PIPE OUTLET, K=1.0 (CRANE PAPER 410, A-29)	
K = f L/D OR L = KD/f WHERE D = 0.335', f = 0.017 (PAPER 410, A-26)	
L = (1)(0.335)/0.017 =	19.7'
4" PIPE LENGTH	950'
TOTAL LENGTH	1082'

PARSONS **Calculation Number** NPTF 1-078 - 04

Rev	By	Date	CK	Date	Title
					Author — Sheet 7 Of 7

5) CONT'D

h_L, 4" PIPE @ 250 GPM

$$h_L = (1082')\left(\frac{1.46\ PSI}{100'}\right) = 15.8\ PSI$$

$$h_{L\ TOTAL} = h_{L\ 2"} + h_{L\ 4"} + h_{L\ CONTROL\ VALVE}$$

$$= \underbrace{3.9\ PSI + 15.8\ PSI}_{46\ FT} + h_{L\ CONTROL\ VLV}$$

FOR 2" CONTROL VLV., MAX C_V FOR 2" ROTARY PLUG (LESLIE), FLOW TO OPEN, LINEAR C_V MAX = 51, @ 70% OPEN C_V = 39

FOR 2" GLOBE CONTROL, 1.5" ORIFICE DIA, C_V = 30.5, @ 70% SAY 20

ΔP ROTARY PLUG @ 70% $\Delta P = \left(\frac{Q}{C_V}\right)^2 \frac{\rho}{62.4}$, $\rho = 62.4$ (CRANE PAPER 410, PG. 3-4)

$$\Delta P = \left(\frac{125}{39}\right)^2 (1) = \underline{10.3\ PSI}\ \text{ROTARY} = 24\ FT$$

$$\Delta P\ GLOBE = \left(\frac{125}{20}\right)^2 (1) = \underline{39\ PSI}\ \text{GLOBE} = 90\ FT$$

OPTIONS –

$h_{L\ TOTAL}$ = 46 FT + 24 FT = 70 FT MIN USING ROTARY PLUG

$h_{L\ TOTAL}$ = 46 FT + 90 FT = 136 FT MIN USING GLOBE VLV

USING A TURBINE WATER METER RATHER THAN INSERTION FLOWMETER, h_L INCREASES BY 12 PSI = 28 FT.

h_L TOTAL USING ROTARY CONTROL VLV & TURBINE = 70 FT + 28 FT = **98 FT**

1 SIZE FOR PEERLESS PUMP MODEL 615 J USING 5½" DIA IMPELLER, 105 FT HD @ 125 GPM, MAX PRESS = 120 FT

CONTROL VALVE MAX INLET PRESS = 120 FT = 52 PSI

" " NORM " " = 105 FT = 45 PSI

ΔP, SIZING 11 PSI @ 125 GPM, 70% OPEN

PARSONS **Calculation Number** NPTF 1-07B-05

Rev	By	Date	CK	Date	Title THRUST BLOCK SIZE
			[illegible]	3/23/99	
					Author AL CRAM 3/17/99 Sheet 1 Of

GIVEN: LAYOUT ON P-3, P-8, P-17
DAMES & MOORE GEOTECHNICAL INVESTIGATION DATED MAY 9, 1996,
NFPA 24
PARSONS DESIGN STD-CE-150

REQ'D: THRUST BLOCK DESIGN

SOLN: DAMES & MOORE PG 5, SAYS 2500 LB/FT2 BEARING LOAD

NFPA, TABLE A-8-6.2

Table A-8-6.2 Thrust at Fittings at 100 PSI Water Pressure for Ductile Iron and PVC Pipe

Nom. Pipe Dia. In.	Total Pounds: Dead End	90° Bend	45° Bend	22½° Bend	11¼° Bend
4	1,810	2,559	1,385	706	355
6	3,739	5,288	2,862	1,459	733
8	6,433	9,097	4,923	2,510	1,261
10	9,677	13,685	7,406	3,776	1,897
12	13,685	19,353	10,474	5,340	2,683
14	18,385	26,001	14,072	7,174	3,604
16	23,779	33,628	18,199	9,278	4,661
18	29,865	42,235	22,858	11,653	5,855
20	36,644	51,822	28,046	14,298	7,183
24	52,279	73,934	40,013	20,398	10,249
30	80,425	113,738	61,554	31,380	15,766
36	115,209	162,931	88,177	44,952	22,585
42	155,528	219,950	119,036	60,684	30,489
48	202,683	286,637	155,127	79,083	39,733
54	256,072	362,140	195,989	99,914	50,199
60	298,121	421,606	288,172	116,321	58,440
64	338,707	479,004	259,235	132,157	66,390

NOTE: To determine thrust at pressure other than 100 psi, multiply the thrust obtained in the table by the ratio of the pressure to 100.

For example, the thrust on a 12 in., 90° bend at 125 psi is

$$19{,}353 \times \frac{125}{100} = 24{,}191 \text{ pounds.}$$

1) THRUST BLOCK AREA @ TIE-IN TO 10" TEE

$A_1 = h_b = \frac{T\,S_p}{S_b}$ WHERE $T = \text{THRUST} = 1810\,\text{LB}\ \frac{175\,\text{PSI}}{100\,\text{PSI}}$

$= 3168\,\text{LB}$

S_b = BEARING STRENGTH, USE 2000 LB/FT2

PARSONS **Calculation Number** NPTF 1-07B-05

Rev	By	Date	CK	Date	Title
					Author — Sheet 2 Of

1) CONT'D $S_F = 1.5$ FOR THRUST BLOCK DESIGN

$$A_b = \frac{T S_F}{S_b} = \frac{3168\,LB\,(1.5)}{2000\,LB/FT^2} = 2.37\ FT^2$$

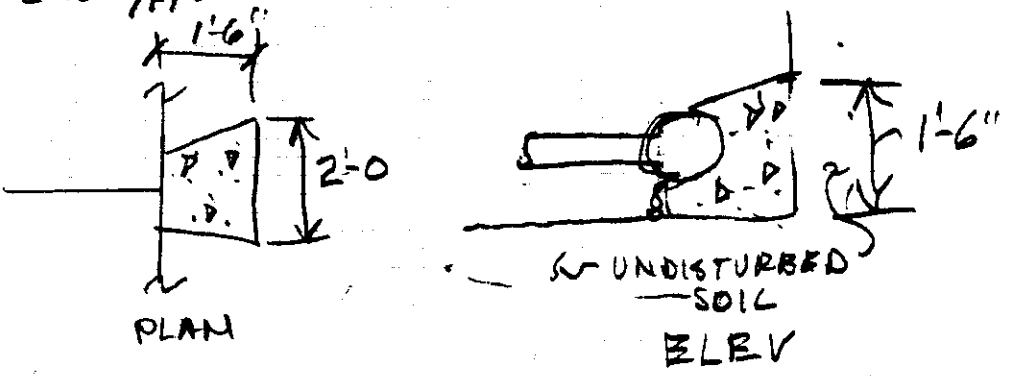

DETAIL
THRUST BLOCK @
4" TIE-IN TO 10" LINE

2) THRUST BLOCK @ 4" 90° ELL

T FROM TABLE A-B-6.2 = 2,559 LB

$$A_b = \frac{T S_F}{S_b} \qquad T = \frac{175}{100}(2559\,LB) = 4478\,LB$$

$S_F = 1.5$

$$A_b = \frac{4478\,LB\,(1.5)}{2000\,LB/FT^2} = 3.36\ FT^2$$

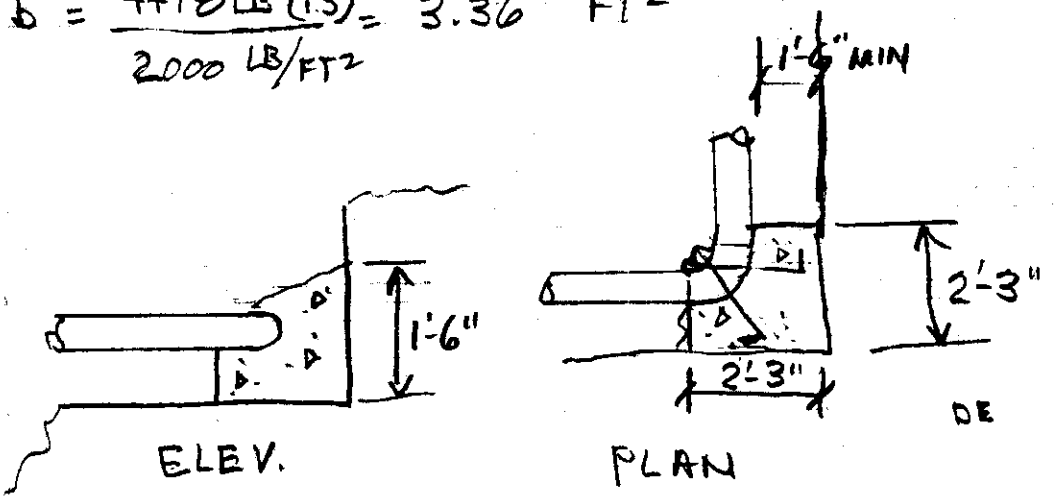

DETAIL
THRUST BLOCK @
4" 90° ELL

PARSONS **Calculation Number** NPTF 1-07B-05

Rev	By	Date	CK	Date	Title
					Author Sheet 3 Of

3) SUPPORT FOR VALVE - DO PER AWW C605 NO REQUIREMENTS IN NFPA

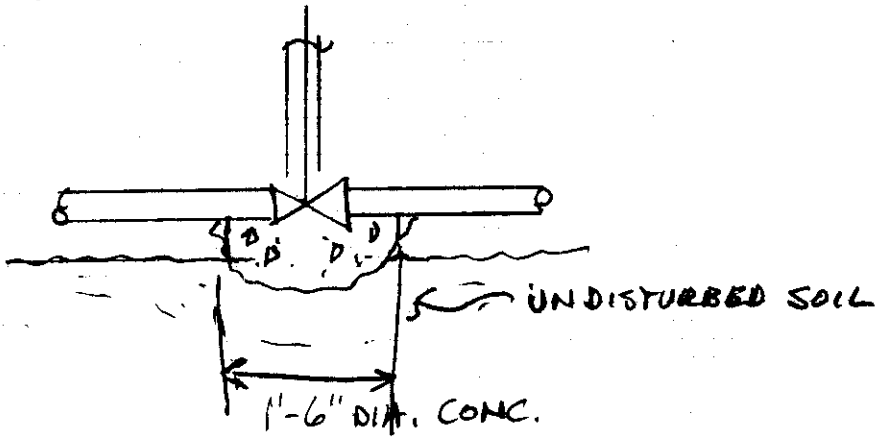

PARSONS **Calculation Number** NPTF - 107B - 06

Rev	By	Date	CK	Date	Title STRIPPER DISCHARGE PIPING SUPPORT
			[illegible]	3/23/99	
					Author AL CRAM 3/4/99 Sheet 1 Of 2

REQUIRED; DETERMINE SUPPORT REQUIREMENTS FOR STRIPPER DISCHARGE PIPING AND BLOWER INLET PIPING

GIVEN: LAYOUT AS SHOWN BELOW
DISCHARGE IS 10" PIPE SIZE

SOLN: USING 10" SCH 40 PVC, WT IS 7.91 LB/FT (~~120~~ 13' - 107')
WT = 103 LB, 10" PIPE O.D = 10.75"
" ID = 10.02"
" " WALL = 0.365"
FROM CEMTROL "PLASTIC PIPING HANDBOOK" FLEXURAL STRENGTH IS 14.5 KSI. TENSILE STRENGTH @ 73°F = 7.9 KSI
FROM ASME B31.3, TABLE B-1, HYDROSTATIC DESIGN STRESS @ 100°F = 1.6 KSI. COEFFICIENT OF EXPANSION = $\underbrace{4.0 \times 10^{-5}\ IN/IN/°F}_{\text{TABLE C-5}}$

1) CALCULATE THERMAL EXPANSION FROM 55°F WATER TEMP TO 120°F IN SUMMER SHUTDOWN MODE. CEILING HEIGHT = 112'

$$\Delta L = \left(\frac{4.0 \times 10^{-5}\ IN}{IN\ °F}\right)(\cancel{120°} - 55°F)(112' - 107')\left(\frac{12''}{FT}\right) = .156''$$

INSTALL SUPPORT STRAP TO ALLOW EXPANSION. WT TO BE SUPPORTED @ TOP OF AIR STRIPPER

2) WEIGHT OF ASSY.

DSG-PD-007 SG = 7.8
FLG. WT STEEL = 52 LB, DENSITY = 0.283
PVC DENSITY = 0.053, SG = 1.47
MACHINERY HANDBOOK, PG. 356

WT OF PVC FLG = 52 LB (1.47/7.8) = 10 LB

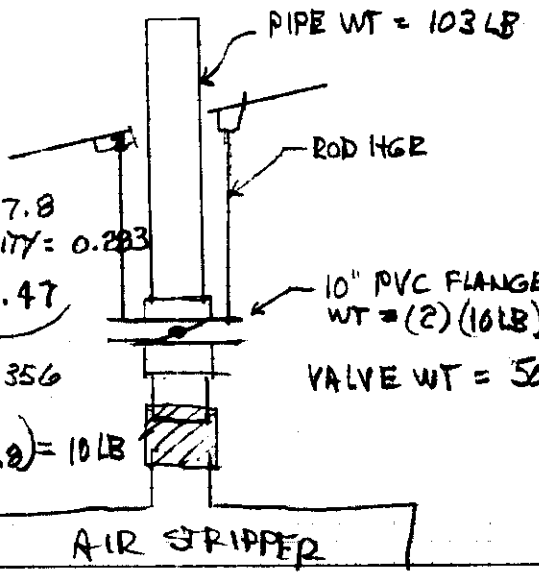

PARSONS **Calculation Number** NPTF 1-07B-06

Rev	By	Date	CK	Date	Title STRIPPER DISCHARGE PIPING SUPPORT
					Author Sheet 2 Of 2

2) CONT'D

WEIGHT = $\overbrace{103\,LB}^{PIPE} + \overbrace{20\,LB}^{FLG} + \overbrace{50\,LB}^{VALVE} + \overbrace{10\,LB}^{EXTRA} = 183\,LB$

SAY 200 LB

3) BLOWER INLET PIPING, REF. DET. 2, H-2

WT = 8' OF 16" 24GA.

AREA OF 16" DUCT = $\left(\frac{\pi(D)}{12}\right)(8') = 33\,FT^2$ @ $.906\,LB/FT^2 = 30\,LB$

WT OF 8' OF 12" DUCT

AREA OF 12" DUCT = $\frac{\pi(D)}{12}(8') = 25\,FT^2$ @ $.906\,LB/FT^2 = 23\,LB$

WT TRANSITION = SAY 10 LB

MISC CLAMPS + FITTINGS = 30 LB

TOTAL = 93 LB, SAY 100 LB

USE 100 LB LOAD FOR DET 1 + 2

NPTF 1-07B-07

PARSONS INFRASTRUCTURE & TECHNOLOGY GROUP

INTEROFFICE CORRESPONDENCE

To: Al Cram **Date:** February 19, 1999

From: J. J. Mount **Phone:** 2766 **Location:** A4-03-G

Subject: Job 734453-14010 NPTF Project
Idaho Falls, ID
Piping Between Wells & NPTF Bldg
Piping Stress Analyses

Stress analyses were performed by computer, using a finite element analysis program for piping. The software is the "AutoPIPE" program, version 4.50, by REBIS Co. of Walnut Creek, CA.

Allowable stress values for ASTM A106-B pipe per ASME B31.3 code are 20,000 psi for sustained loading, 30,000 psi for thermal expansion loading, and 26,667 psi for occasional (earthquake) loading.

Highest stresses (psi @node#) for the 3 systems are listed:

System ID	Sustained	ThermExp	Occasional
NPTF01	9,813 @285	15,472 @45F	22,379 @285
NPTF02	6,364 @172	9,704 @45N	9,267 @145F
NPTF03	8,693 @305	18,411 @265N	18,722 @315N

J. J. Mount, P.E.

Supervising Engineer
Pipe Stress Group
Parsons Engineering
Pasadena, CA

JJM:jm:iocgen02

ASSUMPTIONS FOR STRESS ANALYSIS

PIPE, ABOVE GROUND - OUTER, WELDED C.S. A-106, GRB

120°F MAX. SUMMER TEMP

-20°F " WINTER " (EMPTY W/ HEAT TRACE SHUT OFF)

PIPE, UNDERGROUND - OUTER & INNER - ~~PVC~~ CHANGED FROM INITIAL C.S.

55°F, NO CHANGE IN TEMP, GROUNDWATER IS 55°F.

DIFF. TEMP, OUTER & INNER ABOVE GROUND

OUTER - 120°F SUMMER

INNER - 55°F WELL WTR., WHEN FIRST TURNED ON.

PARSONS	DR / CK	SHEET OF	JOB NO.	SKETCH NO.	REV

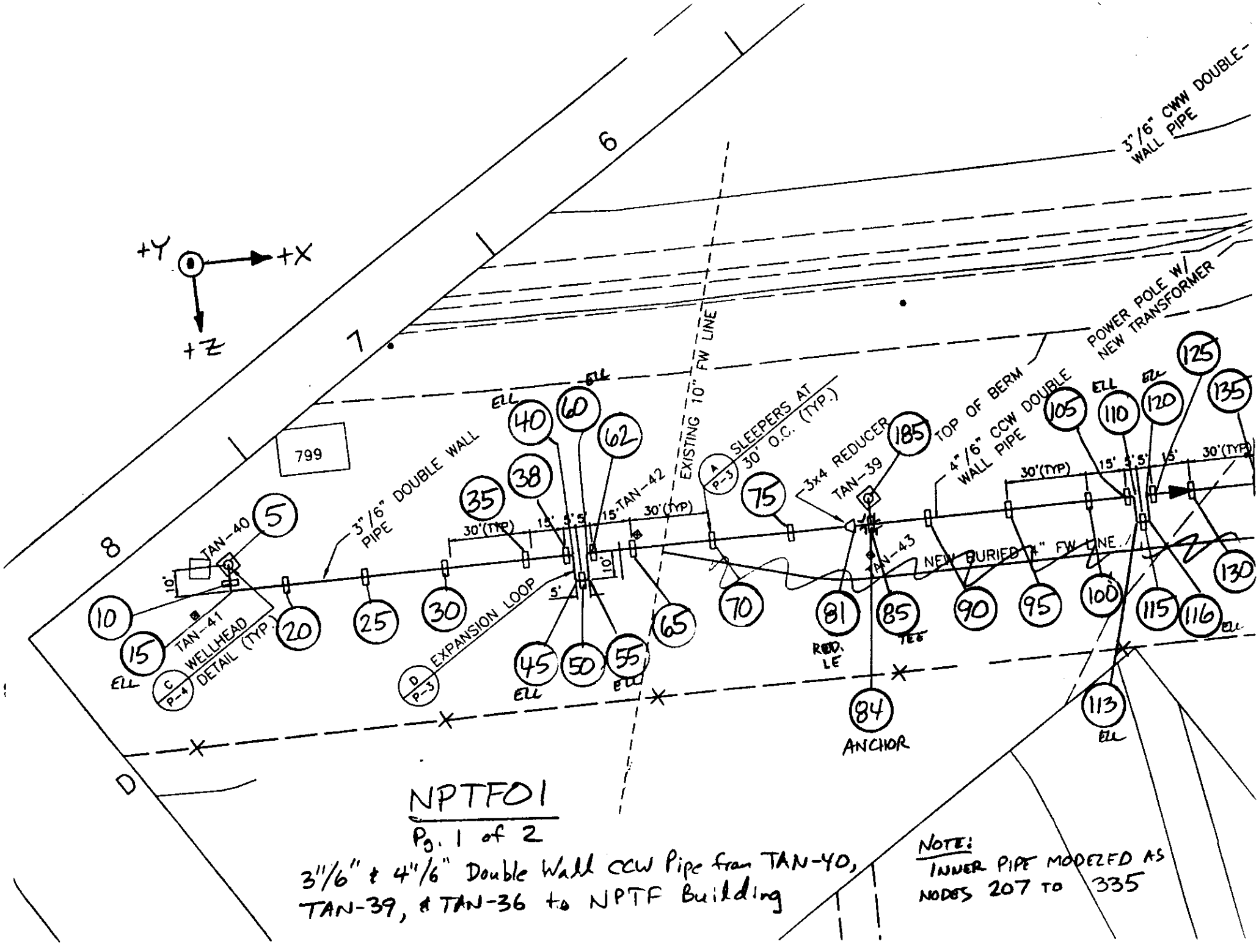

NPTF01

Pg. 1 of 2

3"/6" & 4"/6" Double Wall CCW Pipe from TAN-40, TAN-39, & TAN-36 to NPTF Building

NOTE: INNER PIPE MODELED AS NODES 207 TO 335

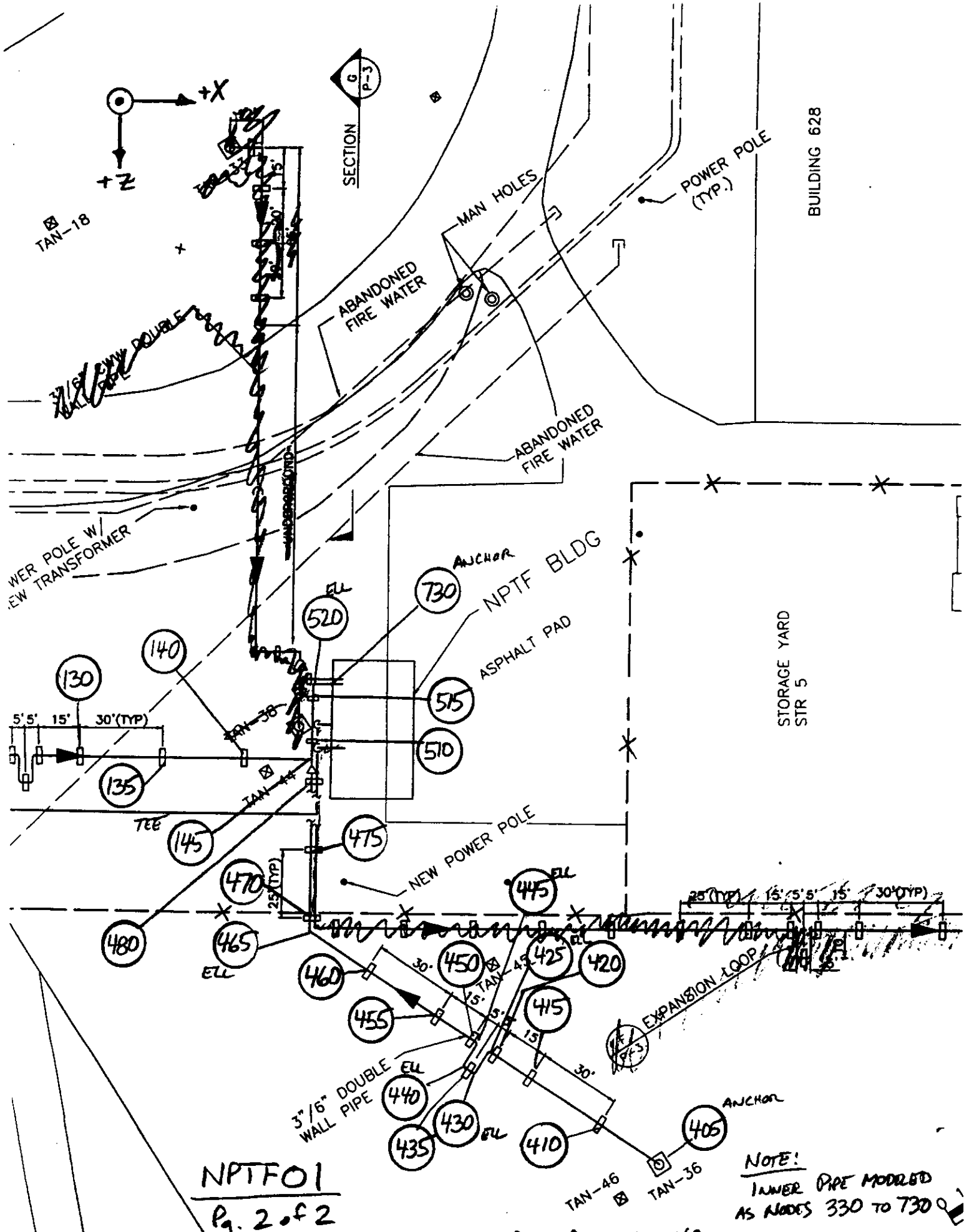

NOTE!
INNER PIPE MODELED AS NODES 330 TO 730

NPTF01

Pg. 2 of 2

3"/6" & 4"/6" Double Wall CCW Pipe from TAN-40, TAN-39, & TAN-36 to NPTF Building.

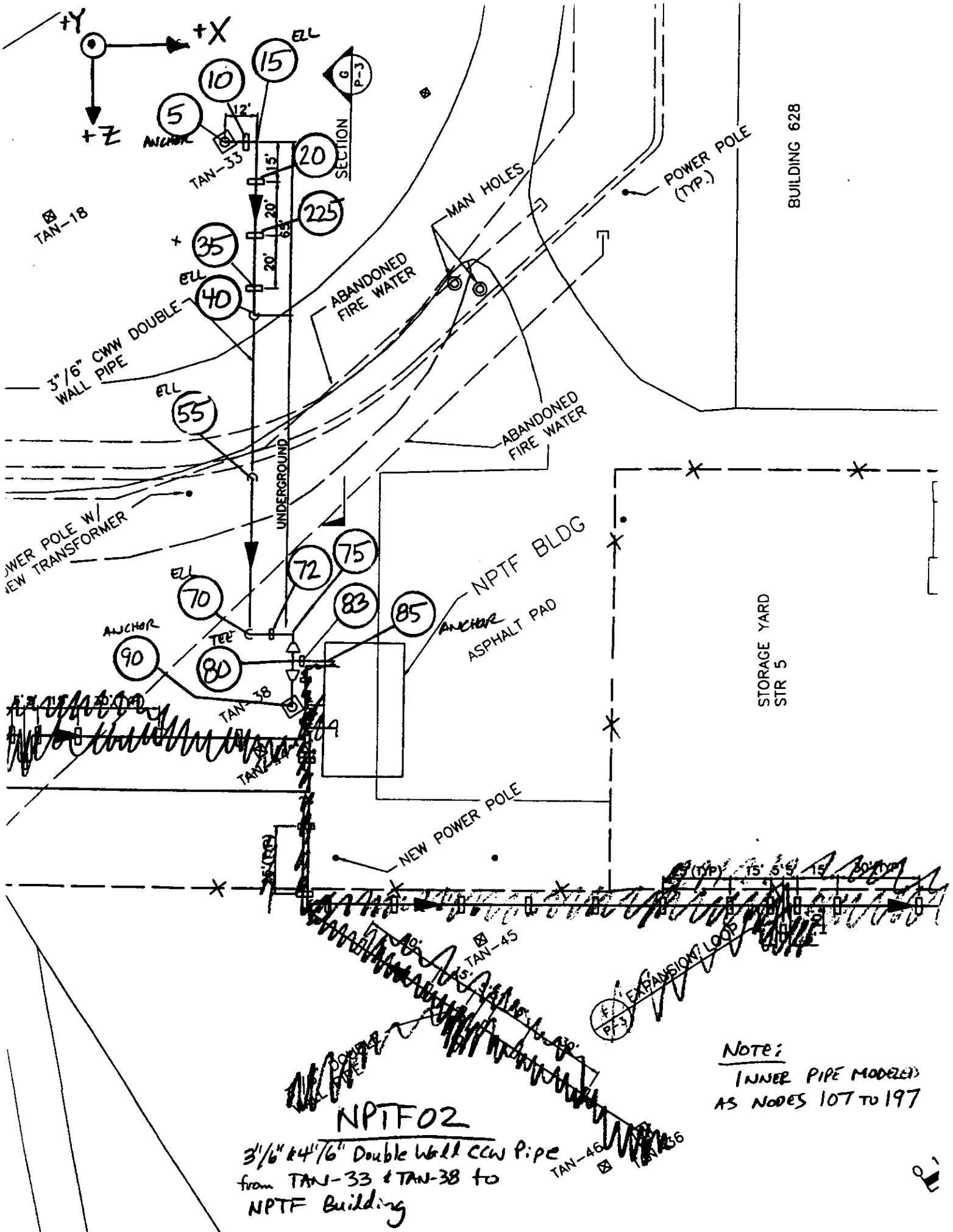
+Y
+X
+Z
ELL
15
10
5
ANCHOR
12'
TAN-33
20
15'
20'
225
65'
20'
35
ELL
40
TAN-18
SECTION
G
P-3
MAN HOLES
POWER POLE (TYP.)
BUILDING 628
ABANDONED FIRE WATER
3"/6" CWW DOUBLE WALL PIPE
ELL
55
ABANDONED FIRE WATER
UNDERGROUND
POWER POLE W/ NEW TRANSFORMER
NPTF BLDG
ELL
70
72
75
83
85
ANCHOR
ASPHALT PAD
ANCHOR
90
TEE
80
TAN-38
STORAGE YARD STR 5
NEW POWER POLE
TAN-45
EXPANSION LOOP
F
P-3
TAN-46
TAN-36
NOTE:
INNER PIPE MODELED AS NODES 107 TO 197
NPTF02
3"/6" & 4"/6" Double Wall CCW Pipe from TAN-33 & TAN-38 to NPTF Building

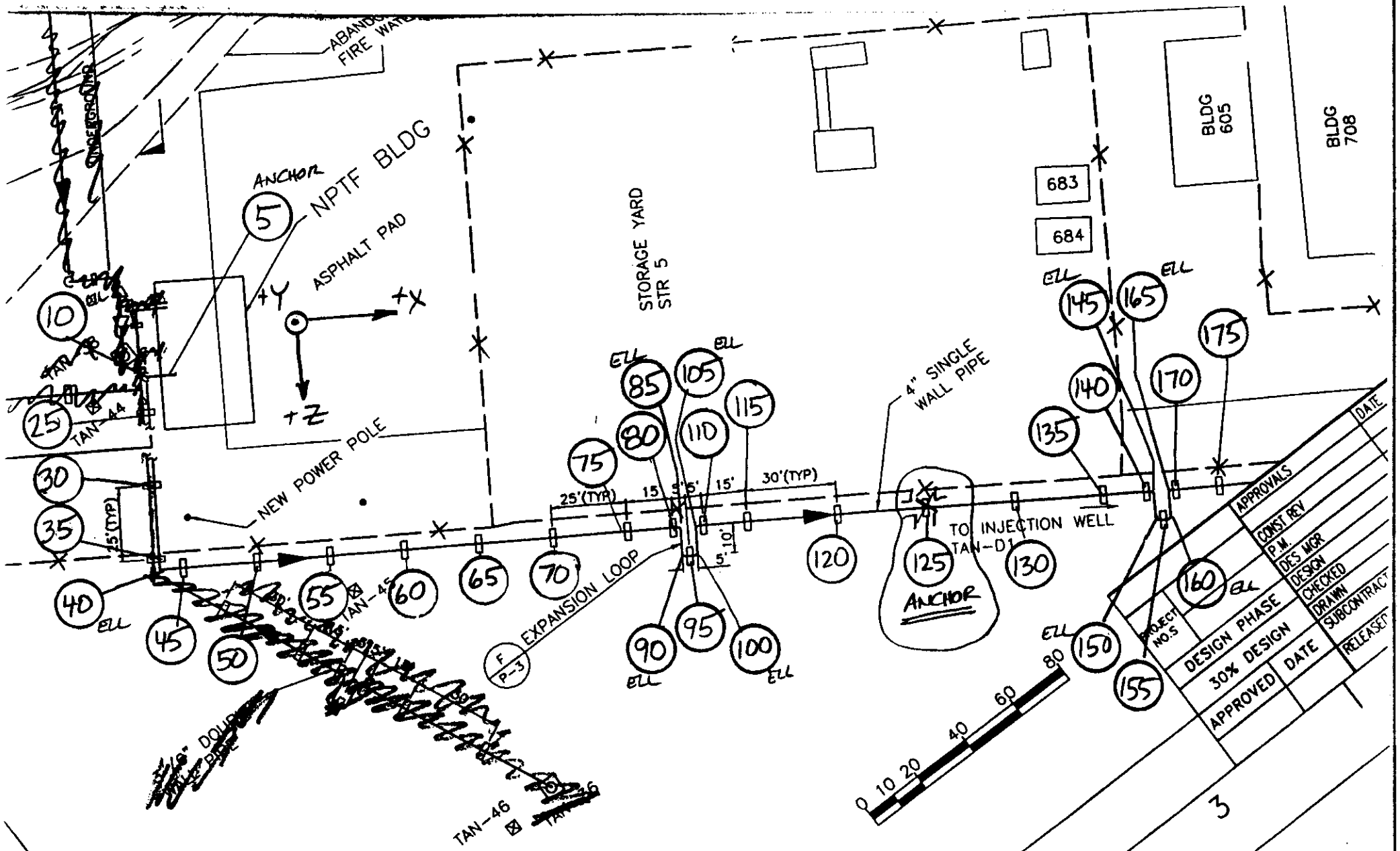

NPTF03

Pg. 1 of 2

4" TW Pipe from NPTF Building to TAN-D1

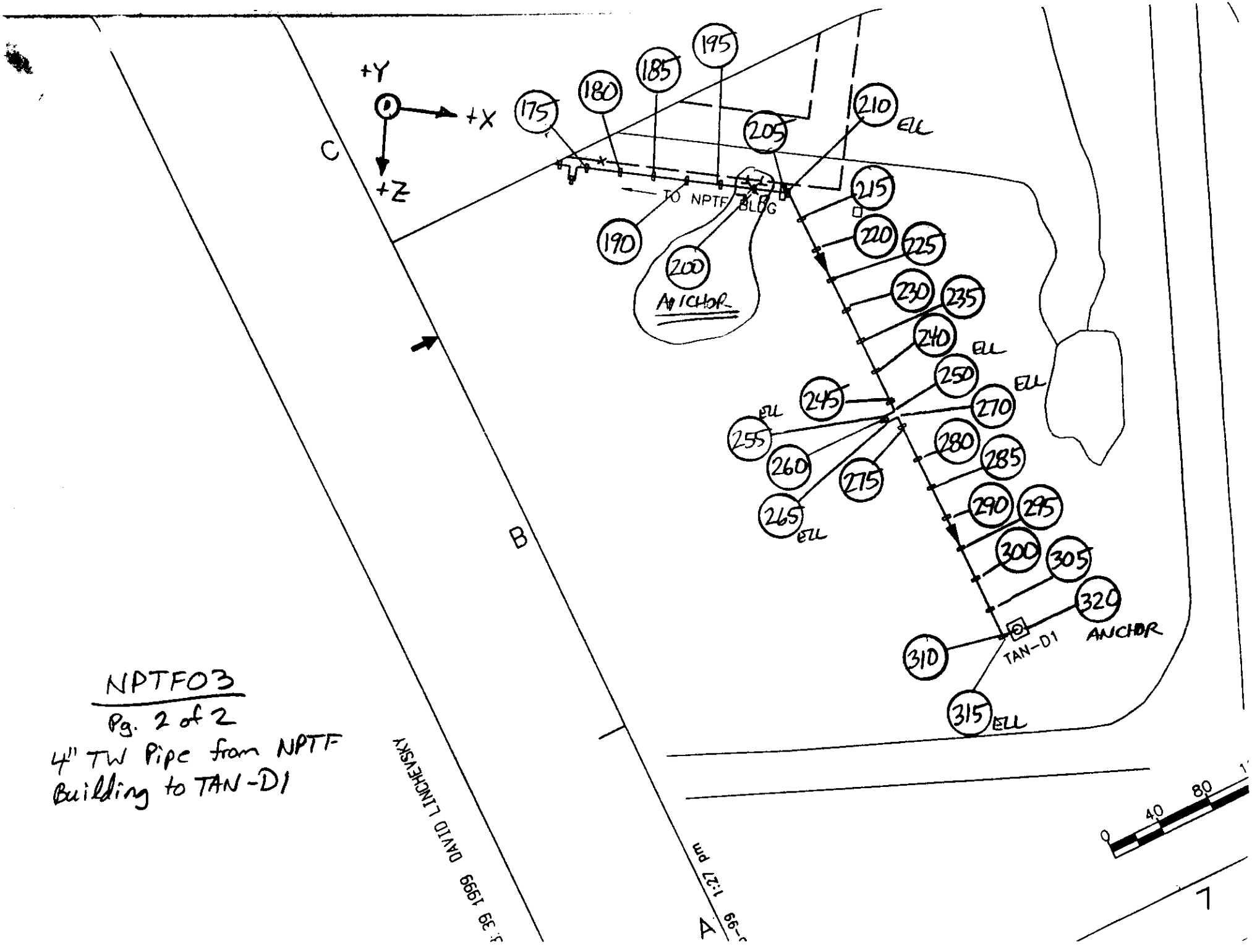

NPTF03

Pg. 2 of 2

4" TW Pipe from NPTF Building to TAN-D1

S Y S T E M S U M M A R Y

Maximum sustained stress

Point	: 285
Stress psi	: 9813
Allowable psi	: 20000
Ratio	: 0.49
Load combination	: GR + Max P

Maximum displacement stress

Point	: 45 F
Stress psi	: 15472
Allowable psi	: 30000
Ratio	: 0.52
Load combination	: Cold to T1

Maximum occasional stress

Point	: 285
Stress psi	: 22379
Allowable psi	: 26600
Ratio	: 0.84
Load combination	: Sus. + E1

Maximum hoop stress

Point	: 281
Stress psi	: 1644
Allowable psi	: 20000
Ratio	: 0.08
Load combination	: Max P

Maximum sustained stress ratio

Point	: 285
Stress psi	: 9813
Allowable psi	: 20000
Ratio	: 0.49
Load combination	: GR + Max P

Maximum displacement stress ratio

Point	: 45 F
Stress psi	: 15472
Allowable psi	: 30000

S Y S T E M S U M M A R Y

Ratio : 0.52
Load combination : Cold to T1

Maximum occasional stress ratio

Point : 285
Stress psi : 22379
Allowable psi : 26600
Ratio : 0.84
Load combination : Sus. + E1

Maximum hoop stress ratio

Point : 281
Stress psi : 1644
Allowable psi : 20000
Ratio : 0.08
Load combination : Max P

* * * The system satisfies ASME B31.3 code requirements * * *
* * * for the selected options * * *

S Y S T E M S U M M A R Y

Maximum sustained stress

Point	: 172
Stress psi	: 6364
Allowable psi	: 20000
Ratio	: 0.32
Load combination	: GR + Max P

Maximum displacement stress

Point	: 45 N
Stress psi	: 9704
Allowable psi	: 30000
Ratio	: 0.32
Load combination	: T1 to T2

Maximum occasional stress

Point	: 145 F
Stress psi	: 9267
Allowable psi	: 26600
Ratio	: 0.35
Load combination	: Sus. + E2

Maximum hoop stress

Point	: 90
Stress psi	: 1922
Allowable psi	: 20000
Ratio	: 0.10
Load combination	: Max P

Maximum sustained stress ratio

Point	: 172
Stress psi	: 6364
Allowable psi	: 20000
Ratio	: 0.32
Load combination	: GR + Max P

Maximum displacement stress ratio

Point	: 45 N
Stress psi	: 9704
Allowable psi	: 30000

S Y S T E M S U M M A R Y

Ratio : 0.32
Load combination : T1 to T2

Maximum occasional stress ratio

Point : 145 F
Stress psi : 9267
Allowable psi : 26600
Ratio : 0.35
Load combination : Sus. + E2

Maximum hoop stress ratio

Point : 90
Stress psi : 1922
Allowable psi : 20000
Ratio : 0.10
Load combination : Max P

* * * The system satisfies ASME B31.3 code requirements * * *
* * * for the selected options * * *

S Y S T E M S U M M A R Y

Maximum sustained stress

Point	: 305
Stress psi	: 8693
Allowable psi	: 20000
Ratio	: 0.43
Load combination	: GR + Max P

Maximum displacement stress

Point	: 265 N
Stress psi	: 18411
Allowable psi	: 30000
Ratio	: 0.61
Load combination	: Cold to T1

Maximum occasional stress

Point	: 315 N
Stress psi	: 18722
Allowable psi	: 26600
Ratio	: 0.70
Load combination	: Sus. + E2

Maximum hoop stress

Point	: 5
Stress psi	: 1638
Allowable psi	: 20000
Ratio	: 0.08
Load combination	: Max P

Maximum sustained stress ratio

Point	: 305
Stress psi	: 8693
Allowable psi	: 20000
Ratio	: 0.43
Load combination	: GR + Max P

Maximum displacement stress ratio

Point	: 265 N
Stress psi	: 18411
Allowable psi	: 30000

S Y S T E M S U M M A R Y

Ratio : 0.61
Load combination : Cold to T1

Maximum occasional stress ratio

Point : 315 N
Stress psi : 18722
Allowable psi : 26600
Ratio : 0.70
Load combination : Sus. + E2

Maximum hoop stress ratio

Point : 5
Stress psi : 1638
Allowable psi : 20000
Ratio : 0.08
Load combination : Max P

* * * The system satisfies ASME B31.3 code requirements * * *
* * * for the selected options * * *

PARSONS **Calculation Number** OU 1-07B NPTF-08

Rev	By	Date	CK	Date	Title DUCT DESIGN FOR AIR STRIPPER BLOWER SUPPLY DUCTWORK
1	AJC	3/31/99	[illegible]	4/1/99	
					Author AL CRAM 3/1/99 Sheet 1 Of 10

GIVEN:

AIR STRIPPER BLOWERS WILL PROVIDE 900 CFM @ 22" W.C. PER VENDOR PROPOSAL.

REQUIRED: SIZE AND PRESSURE CLASSIFICATION OF DUCTWORK REQUIRED.

SOLN;

1) CONVERT 900 CFM @ 22" W.C. TO SCFM.

FOR AIR COMPRESSION, $P_1 V_1^m = P_2 V_2^m$, ASSUME ADIABATIC AND POLYTROPIC EXPANSION. (MARKS, PG. 325)

WHERE $P_1 = 12.23$ PSIG @ 5000 FT ELEV

$P_2 = 12.23$ " " $+ 22''$ W.C $\left(\frac{1 \text{ PSI}}{27.7'' \text{ W.C.}}\right)$

$P_2 = 12.23 + 0.79 \text{ PSI} = 13.02 \text{ PSI}$

$$\left(\frac{V_1}{V_2}\right)^m = \frac{P_2}{P_1}$$ WHERE $m = 1$ FOR ISOTHERMAL

$$V_1 = \frac{P_2}{P_1} V_2 \quad \text{OR} \quad V_1 = \frac{13.02}{12.23}(900 \text{ CFM}) = 958 \text{ SCFM}$$

2A) DETERMINE DUCT SIZE AND PRESSURES OF DIFFERENT PORTIONS OF DUCTWORK TO FIRST FAN

USING FRICTION LOSS CHART FIG 14-1 1900 CFM @ IN A 16" DIA. DUCT GIVES A DESIGN FRICTION LOSS OF 0.15 IN W.G./100 FT.

CHART 14.1 FROM HVAC "SYSTEMS DUCT DESIGN", 3rD ED. SHEET METAL AND AIR CONDITIONING CONTRACTORS NAT'L ASSN. (SMACNA),

2A) CONT'D

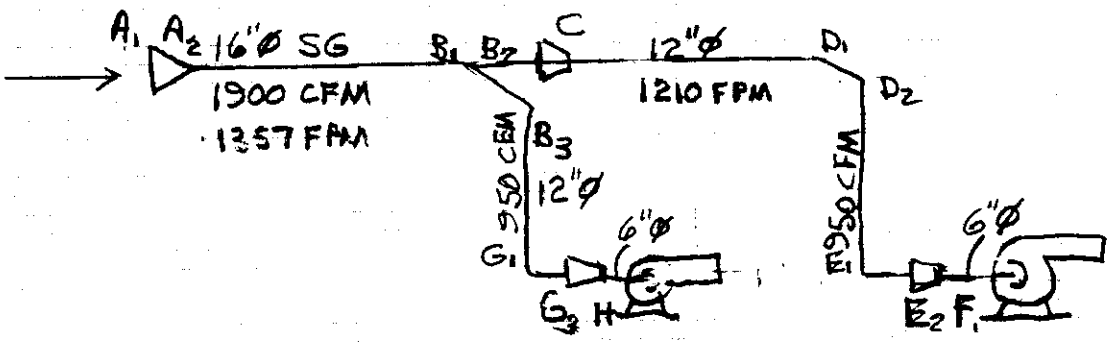

~~DETERMINE INLET REGISTER SIZE,~~

FROM SMACNA, FIGURE 9-27 (ATTACHED) USE 7.5 FT²

LOUVER FACE AREA, 45% MINUM FREE AREA. FACE VELOCITY IS $\frac{1900\ FT^3/MIN}{(7.5FT^2)(.45\ \text{FREE AREA})} = 562\ FT/MIN$ @ LOUVERS

STATIC PRESSURE LOSS AT INLET REGISTER = 0.183" WG (FROM SMACNA, TABLE 9-7) → REWORK PER RUSKIN DATA, PG 3

$V_P = \left(\frac{V}{4005}\right)^2$ (SMACNA EQ 5-10) WHERE $V = \frac{1900\ FT^3/MIN}{\text{AREA OF 16" DUCT}}$

$A_{16"} = 1.4\ FT^2$, $V = \frac{1900\ FT^3/MIN}{1.4\ FT^2} = 1357\ FT/MIN$

$V_P = \left(\frac{1357}{4005}\right)^2 = 0.115"$ WG.

TP_{LOSS} @ TAPERED INLET $= (C)(V_P)$ WHERE V_P = VELOCITY PRESS OF DOWNSTREAM SECTION

SAY Ø IS 120°, C = 0.33 FROM TABLE 14-15, G

$TP_{TAPERED\ INLET} = (0.33)(0.115"\ WG.) = 0.038"\ W.G.$

PARSONS **Calculation Number** OU 1-07B NPTF-08

Rev	By	Date	CK	Date	Title
					Author — Sheet 3 Of 10

2A) DETERMINE INLET REGISTER SIZE AND PRESSURE DROP.

USING 7.5 FT^2 FREE AREA FROM FIG 9-27,

AIR VELOCITY = $\frac{1900 \text{ CFM}}{7.5 \text{ FT}^2}$ = 253 FPM TOO LOW

USING 600 FPM FACE VELOCITY GIVES A PRESSURE DROP OF 0.052" WG. FROM RUSKIN CHART BELOW, HOWEVER DOES NOT INCLUDE THE EFFECT OF A BIRD SCREEN.

FREE AREA = $\frac{1900 \text{ FT}^3/\text{MIN}}{600 \text{ FT/MIN}}$ = 3.2 FT^2

$A = Q/V$

SAY BIRDSCREEN ADDS .026" W.G. PRESS DROP, FROM FIG. 9-21

TOTAL INLET LOUVER LOSS = 0.052 + 0.026 = 0.078" W.G.

PRESSURE DROP

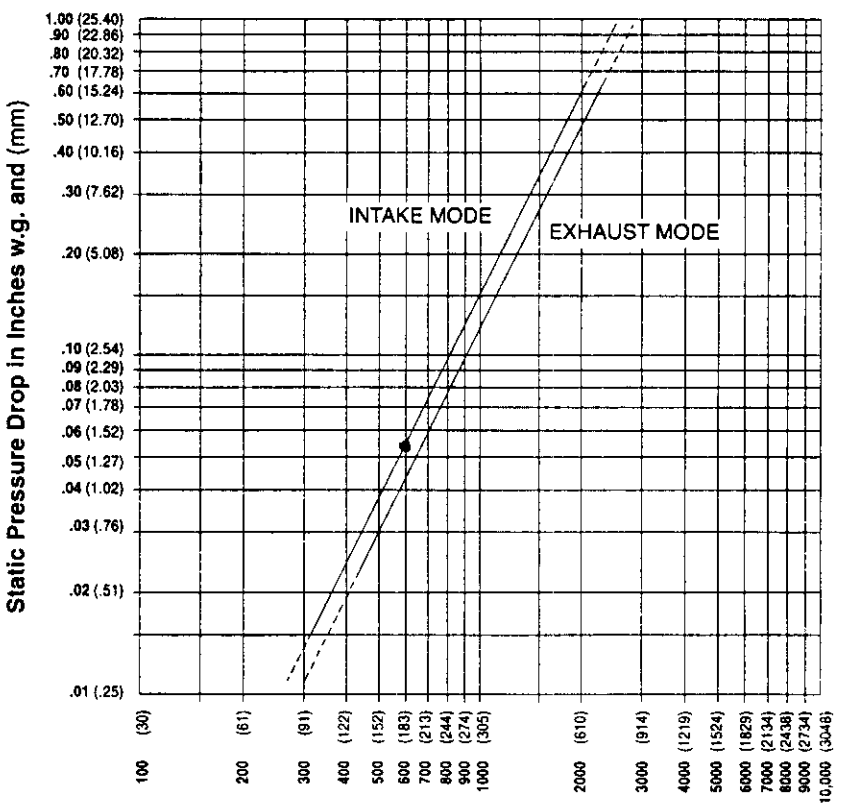

Ratings do not include the effect of a bird screen.

amca CERTIFIED RATINGS WATER PENETRATION AIR PERFORMANCE AIR MOVEMENT AND CONTROL ASSOCIATION, INC.

Ruskin Manufacturing Company certifies that the ELF6375DX and ELF6375DXH Louvers shown herein is licensed to bear the AMCA Seal. The ratings shown are based on tests and procedures performed in accordance with AMCA Publication 511 and comply with the requirements of the AMCA Certified Ratings Program. The AMCA Certified Ratings Seal applies to air performance ratings and water penetration ratings only.

2A) CONT'D

$TP_{LOSS}\ A_1 \text{ TO } A_2 = \underset{\text{DEGISTER}}{0.078 \text{ W.G.}} + \underset{\text{TAPERED INLET}}{0.038'' \text{ W.G.}}$

$= \underline{0.116'' \text{ W.G.}}$

$TP_{LOSS}\ A_2 \text{ TO } B \text{ DUCT SECTION} = (0.15''\text{WG}/100\text{FT})(9\text{ FT})(\overset{1.0 \text{ FIG. } 14.3}{CF}) = \underline{-0.014'' \text{WG}}$

$TP_{LOSS}\ B_1 \text{ TO } B_3$, USE SMACNA, TABLE 14-14, M.

V_{B3}/V_{B1} (12"/16")

$V_{B1} = 1357 \text{ FT/MIN}$

$V_{B3} = \dfrac{950 \text{ FT}^3/\text{MIN}}{A_{b3}} = \dfrac{950 \text{ FT}^3/\text{MIN}}{0.785 \text{ FT}^2}$

$A_{b3} = \pi r^2 = \pi 6^2 = 0.785 \text{ FT}^2$

$V_{B3} = 1210 \text{ FT/MIN}$ FOR 12" DUCT

BRANCH $\dfrac{V_{B3}}{V_{B1}} = \dfrac{1210}{1357} = 0.89$, FROM TABLE 14-14.M, $C = 0.52$

$TP_{LOSS}\ B_1 \rightarrow B_3 = (0.52)(V_P)$ WHERE $V_P = 0.115''$ WG. UPSTREAM V_P

$TP_{LOSS}\ B_1 \rightarrow B_3 = (0.52)(V_P) = (0.52)(0.115'') = \underline{0.06'' \text{ W.G.}}$

$TP_{LOSS}\ B_3 \text{ TO } G_1 \text{ DROP DUCT SECTION} = (0.18''\text{WG}/100\text{FT})\left(\dfrac{\overset{6'}{\cancel{8'-2''}}}{100}\right)(1.0)$

$= \underline{0.0108'' \text{ W.G.}}$

$TP_{LOSS}\ G_1 \rightarrow G_2$ SMOOTH 90° ELL, SAY $R/D = 1.5$, $C = 0.15$

$TP_{LOSS} = (C)(V_P)$ WHERE $V_P = \left(\dfrac{1210}{4005}\right)^2 = 0.0913'' \text{ W.G.}$

$TP_{LOSS} = (0.15)(0.0913 \text{ W.G.}) = \underline{0.014'' \text{ W.G.}}$

ASSUME BLOWER WILL HAVE AN 8" INLET PER CINCINATTI FAN MODEL PB 15A W/ 16.5 X 4.375 WHEEL, 3582 RPM

TP_{LOSS} G_2 TO H_1 THRU 12"x 8" REDUCER.

VELOCITY IN 8" PORTION OF DUCT = Q/A WHERE $Q = 950$ CFM

$A = \pi(4)^2 = 50.3\ IN^2 = 0.35\ FT^2$

$V = 950/0.35 = 2714$ FT/MIN

THE DYNAMIC LOSS REQ'D TO ACCELERATE THE AIR INTO BLOWER INTAKE IS INHERENTLY INCLUDED IN THE MANUFACTURERS FAN CURVES, THEREFORE WE WILL USE THE LOSS COEFICIENTS OF SMACNA FOR THE REDUCER ONLY. FOR A LOW PRESS SYSTEM, THE LOSS COEFICIENTS INCLUDE DYNAMIC LOSSES. (SEE SMANA, CHAPT. 8.C.3 AND 5.C.3

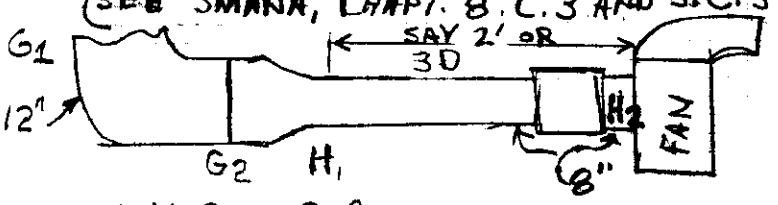

$A_1 = \pi(6)^2 = 113\ IN^2$

$A = 50.3\ IN^2$ (FROM ABOVE)

$A_1/A = \frac{113}{50.3} = 2.24$

SAY θ IS $90°$, $C = 0.12$ FROM SMACNA, TABLE 14-12.A

$TP_{LOSS} = (C)(V_{P\,DOWNSTREAM})$ WHERE $V_P = \left(\frac{V}{4005}\right)^2$, EQ 5-10

$V_P = \left(\frac{2714}{4005}\right)^2 = 0.46$

$TP_{LOSS\ G_2 \to H_1} = (0.12)(0.46") = \underline{0.06"\ W.G.}$

TP_{LOSS} H_1 INTO FAN, USE SMACNA FIG. 6-9 IN CONJUNCTION W/ SMACNA FIGURE 6-1 USING AN INLET AIR VELOCITY OF 2714 FPM AND CURVES S-T, LOSS = 0.3" WG

TP_{LOSS} H_1 INTO H_2 DUCT RUN, 8" PIPE, 950 CFM, 1.3" WG. LOSS/100

SAY A CORRECTION FACTOR IS NEEDED DUE TO THE FLEX COUPLING, USE SMACNA FIG 14-3, ROUGH, CF = 2.25 FOR 2700 FPM IN 8" DUCT,

$TP_{H_1 \to H_2} = (1.3"\ W.G./100FT)(2\ FT)(2.25) = 0.06"\ W.G.$

$TP_{LOSS\ H_1 \to H_2} = (0.3") + (0.06") = \underline{0.36"\ WG.}$

PARSONS **Calculation Number** OU 1-07B NPTF-08

Rev	By	Date	CK	Date	Title
					Author — Sheet 6 Of 10

2B) USING DIAGRAM ON SH 2

LOSSES FROM OUTSIDE TO B_1 ARE 0.13 W.G. FROM PART 2A).

UPSTREAM

$TP_{LOSS}\ B_1 \rightarrow B_2 = (C)(V_P)$ WHERE $V_P = \left(\frac{1357}{4005}\right)^2 = 0.115''$ W.G.

$\frac{V_{B2}}{V_{B1}} = \frac{1210\ FT/MIN.}{1357\ FT/MIN} = 0.89$, FROM TABLE 14.14.M, $C = 0.13$

$TP_{LOSS} = (0.13)(0.115''\ W.G) = 0.0150$ W.G.

TP_{LOSS} DUCT B_1 TO D_1, 12' OF 12" Ø DUCT $= (0.18''\ WG/100F)(12')(1.0)$ (FIG. 14-1) CORR. FACTOR

$= 0.022''$ W.G.

TP_{LOSS} @ ELL, D_1 TO $D_2 = (C)(V_P)$, USING TABLE 14-10.A

SMOOTH 30° ELL, SAY $R/D = 1.0$, $C = 0.22$

$TP_{LOSS} = (0.22)(0.0913\ WG.) = 0.020$ WG.

TP_{LOSS} D_2 TO BLOWER INLET, SAME AS B_3 TO BLOWER INLET IN 2A ABOVE.

TOTAL FROM FIG 7-5 = 0.627 WG. NEGATIVE PRESS

SMACNA

DUCT SIZING WORK SHEET
(U.S. Units)

DATE 3/31/99 PAGE

PROJECT OV 1-07B NPTF LOCATION TAN SYSTEM

2A)

	A DUCT RUN	B SEC-TION	C ITEM	D FLOW CFM	E FRICTION PER 100'	F VELOCITY FPM	G Vp	H LOSS COEFF.	I EQUIV DIAM.	J RECTANGULAR SIZE	K CORR. FACT.	L LOSS PER ITEM	M LOSS PER SECTION	N CUMULATIVE LOSS	O TOTAL LOSS
1	$A_1 \rightarrow A_2$	INLET LOUVERS		1900		600	—	—	(3.2 FT² FREE AREA)			0.078		0.078	
2	"	TAPERED INLET		1900		1357	0.115	0.33				0.038		0.116	
3	$A_2 \rightarrow B_1$	16" DUCT		1900	0.15"	1357					1.0	0.014	0.014	0.13	
4	$B_1 \rightarrow B_3$	45° WYE		950	—	1210	0.115	0.52				0.06		0.19	
5	$B_3 \rightarrow G_1$	12" DUCT, 6' DROP		950	0.18	1210					1.0		0.011	0.201	
6	$G_1 \rightarrow G_2$	12" 90° ELL		"		"	0.0913	0.15				0.014		0.215	
7	$G_2 \rightarrow H_1$	12"×8" REDUCER		950		2714	0.46	0.12				0.055		0.270	
8	$H_1 \rightarrow H_2$	8" DUCT, 2' RUN		950	1.3						2.25		0.06	0.33	
9	$H_2 \rightarrow$ FAN					2714						0.3"		0.63	0.630
10															
11															
12															
13															
14															
2B)															
16	$A_1 \rightarrow B_1$	SAME AS ABOVE												0.13	
17	$B_1 \rightarrow B_2$	ACROSS 16×12" WYE				1357	0.115	0.13				0.0150		0.145	
18	$B_2 \rightarrow D_1$	12' OF 12" DUCT		950	0.18	1210					1.0		0.022	0.167	
19	$D_1 \rightarrow D_2$	12" 90° ELL					0.091	0.22				0.020		0.187	
20	$D_2 \rightarrow E_1$	12" DUCT, 6' DROP	SAME AS $B_3 \rightarrow G_1$										0.011	0.198	
21	$E_1 \rightarrow E_2$	12" 90° ELL	SAME AS $G_1 \rightarrow G_2$									0.014		0.212	
22	$E_2 \rightarrow F_1$	12"×8" REDUCER, SAME AS $G_2 \rightarrow H_1$										0.055		0.267	
23	$F_1 \rightarrow F_2$	SAME AS ABOVE											0.06	0.327	
24	$F_2 \rightarrow$ FAN	"	" "									0.3		0.627	0.627
25															

NOTES: *Indicates duct lining used. Sizes are interior dimensions.

© Copyright—SMACNA 1990

Figure 7-5 DUCT SIZING WORK SHEET (U.S.)

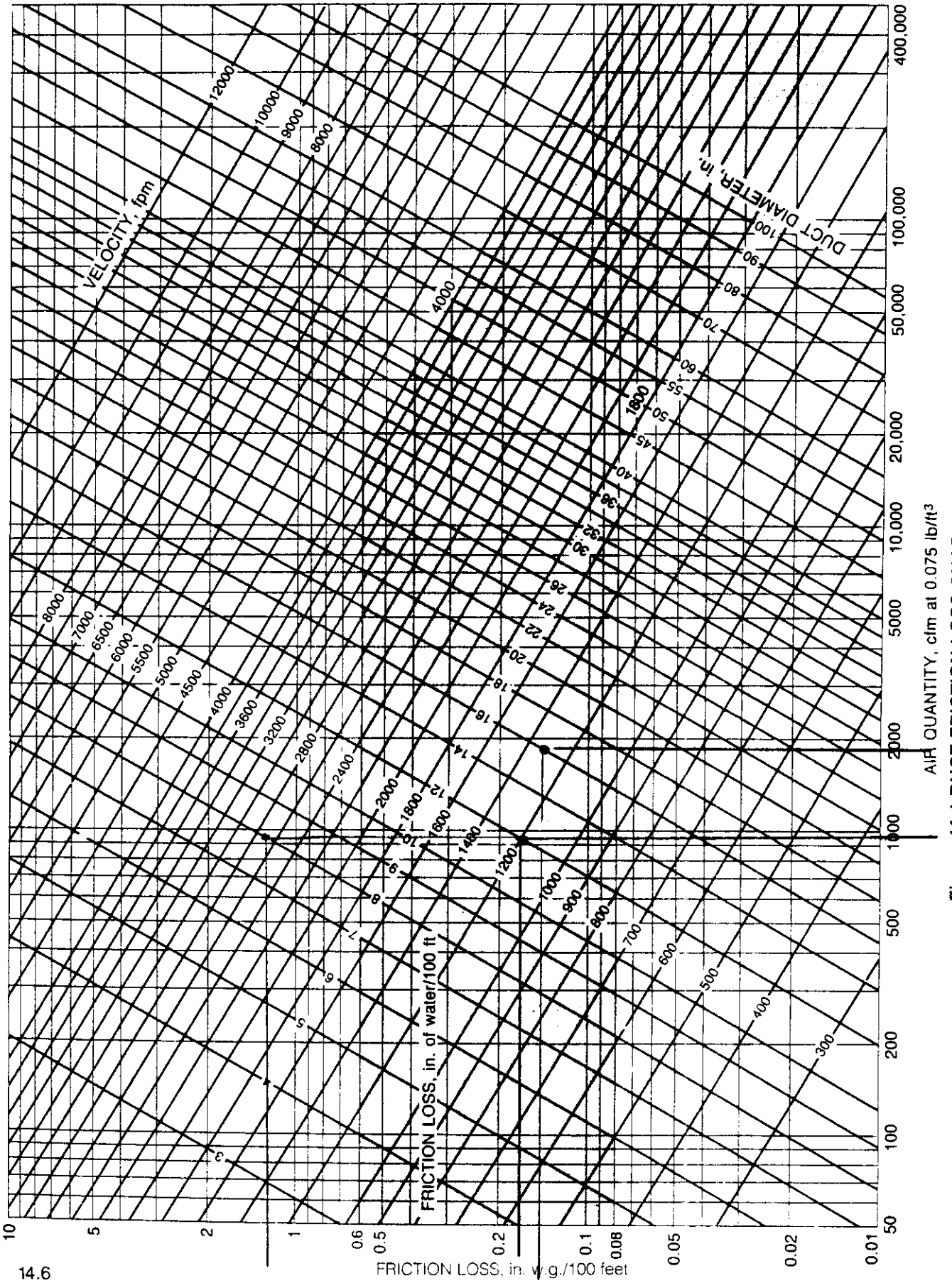

Figure 14-1 DUCT FRICTION LOSS CHART (U.S. Units) (2)

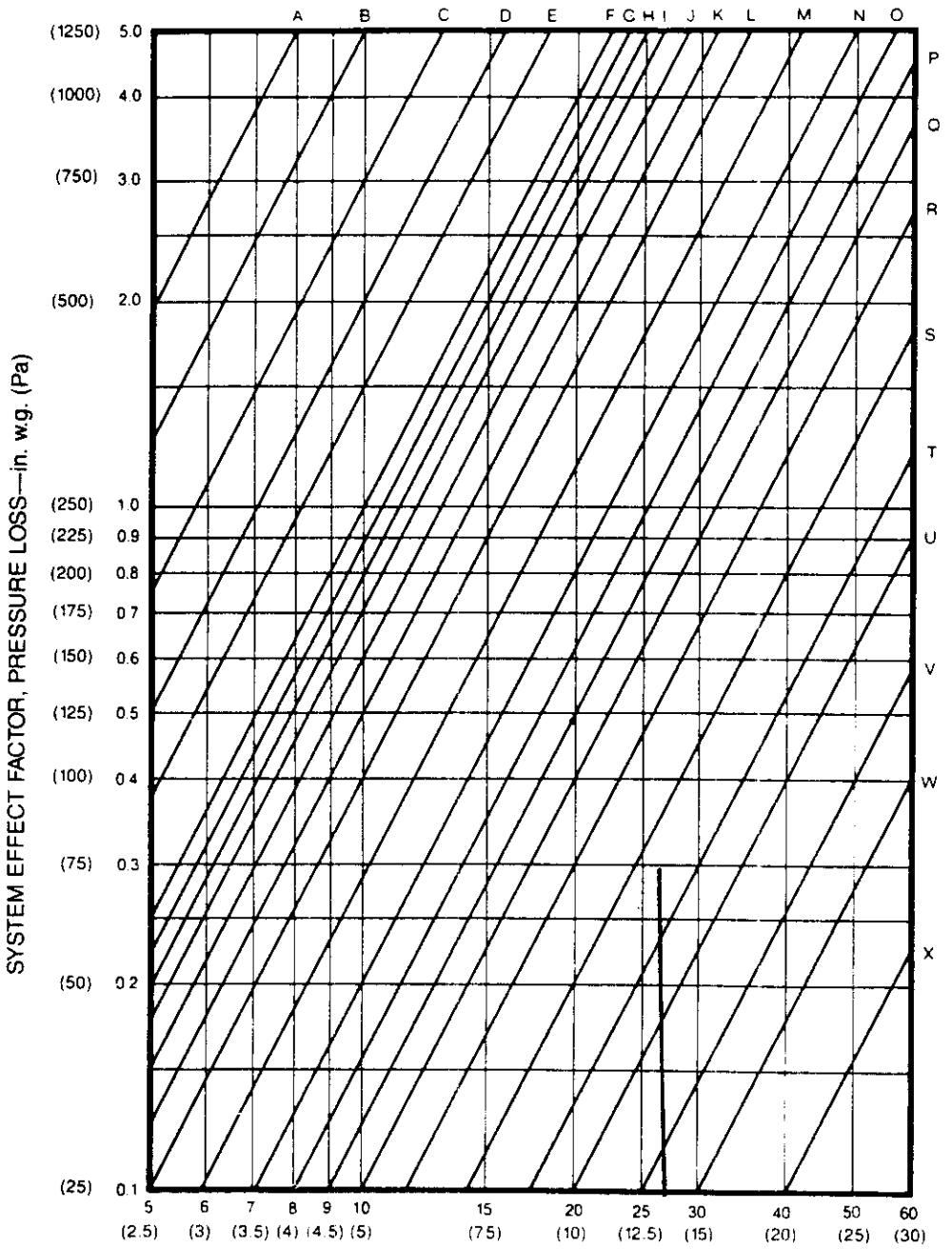

Air Density = 0.075 lb per cu ft (1.204 kg/m³)

Figure 6-1 SYSTEM EFFECT CURVES (1)

FOR INLET TO FAN, USING FIG 6-3, USE S-T LINE, 2714 FT/MIN, LOSS = 0.3" WG

PARSONS **Calculation Number** OU 1-07B NPTF-08

Rev	By	Date	CK	Date	Title
					Author — Sheet 10 Of 10

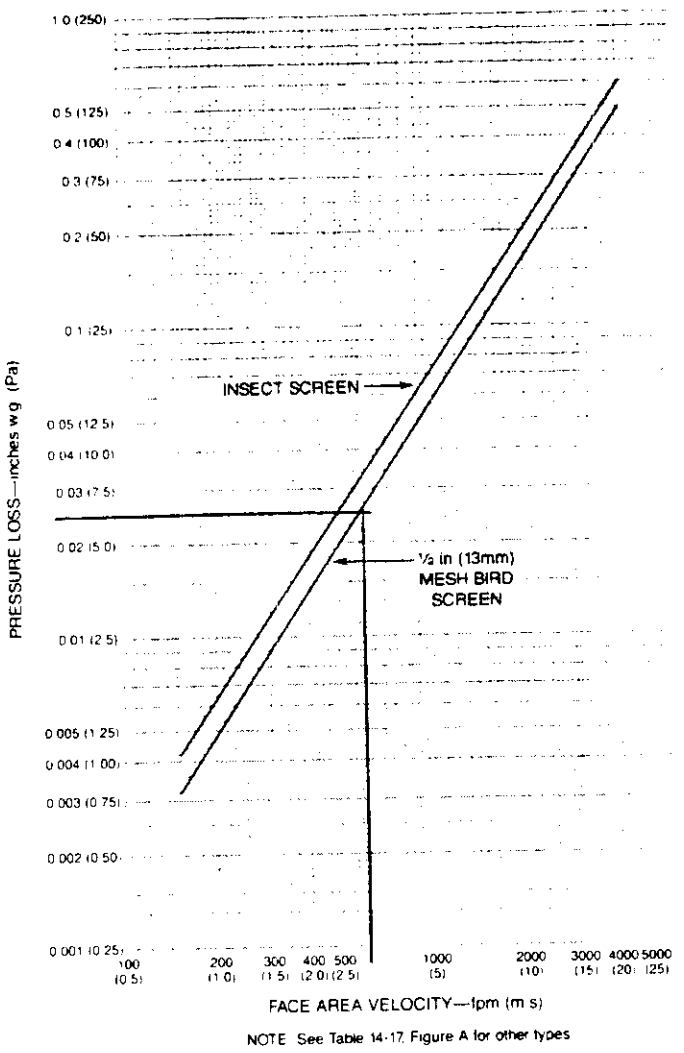

NOTE See Table 14-17, Figure A for other types

Figure 9-21 SCREENS

FROM SMACNA, HVAC SYSTEMS DUCT DESIGN

NPTF-1-07B-09

LOCKHEED MARTIN

Lockheed Martin Idaho Technologies Company

INTERDEPARTMENTAL COMMUNICATION

Date:	April 27, 1999		
To:	Alma J. Cram	MS 3954	6-8426
From:	James H. Call	MS 0302	6-6257
Subject:	FIRE HAZARD ANALYSIS FOR NEW PUMP AND TREAT FACILIYT (TAN OPERABLE UNIT 1-07B) – JHC-08-99		

The DOE Fire Protection orders no longer require a formal Fire Hazards Analyses (FHA) for buildings under 5000 sq ft or $5,000,000. However, those same items need to be addressed to verify compliance with the other fire protection requirements from those orders.

Accordingly, I have completed a design review of the New Pump and Treat Facility (TAN OU1-07B) 90% Design. I have attached my review in the format designated for a FHA for inclusion in the Final Design.

Feel free to contact me with any additional information. I will perform a Fire Protection Assessment upon completion of the construction period.

Attachment

cc: J. A. Brown
J. A. Durrant
J. H. Call File
UFC 5202

1. INTRODUCTION

This report documents the Fire Hazard Analysis (FHA) for the proposed Test Area North (TAN) New Pump and Treat Facility (NPTF) and Operations at the Idaho National Engineering and Environmental Laboratory.

This report was based on the conceptual level plans contained in the Parsons' "New Pump and Treat Facility 90% Draft Remedial Design, Test Area North, Operable Unit 1-07B". It is intended to be an overview of the general concept and establish basic fire protection parameters.

2. REFERENCES

The following materials were used as references for this report:

1. U. S. Department of Energy (DOE) Order 420.1, "Facility Safety", October 24, 1996.

2. DOE Order 440.1A, "Worker Protection Management for DOE Federal and Contractor Employees", March 27, 1998.

3. DOE G-420.1/B-0, G-440.1/E-0, "Implementation Guide for use with DOE Orders 420.1 and 440.1, Fire Safety Program", September 30, 1995.

4. Lockheed Martin Idaho Technologies Company (LMITCO) Management Control Procedure (MCP) 579, "Fire Hazard Analysis", Revision 2, February 1, 1997.

5. Parsons Infrastructure and Technology Group, "Pump and Treat Facility 90% Draft Remedial Design, Operable Unit 1-07B, Test Area North", March 1999, DOE/ID-10661, Revision B.

6. National Fire Protection Association (NFPA) Codes and Standards.

3. OCCUPANCY

This building is to be a pump house used for the recirculation of contaminated groundwater and the stripping of trichloroethane from the groundwater stream by air.

Contents include a 3000-gallon surge, electric pumps, and two air strippers in a process equipment area, an electrical/control room, and a storage area.

4. METHODOLOGY

Structures of this size do not require a formal FHA. This information covers an outline of items considered to ensure a fire safe facility.

5. ELEMENTS OF THE BUILDING

The proposed structure will be a one story, non-combustible metal building, 30' X 50', on concrete slab.

There will be no safety class systems in the facility. Fire hazards are limited to those routinely accepted at process type buildings, and require no special protection.

The proposed structure will have three separate exits within the allowable travel distance for non-sprinklered buildings. Direct exterior exits are provided from each of the building areas.

The proposed equipment is not vital to any DOE mission. The facility will be located inside the existing TAN-TSF Perimeter, and will require no additional safety or security measures. The structure is located over 100 ft from the nearest facility, limiting potential damage to and from a fire in an adjoining structure.

A major fire in this structure will result in the loss of the facility (i.e. Maximum Possible Fire Loss = Maximum Credible Fire Loss = 100% = $1,303,000 = approximate Building Construction Cost).

6. FIRE PROTECTION FEATURES

Fire protection features are limited to non-combustible construction, low combustible loading, and small size. Fire Sprinkler protection is not required for this low value, low risk, non-occupied facility. Fire Extinguishers should be installed as required by NFPA 10, "Portable Fire Extinguishers". Emergency lighting and exit lights will be installed per NFPA 101, "Life Safety Code".

7. IDENTIFIED DEFICIENCIES

The provision of standard fire safety measures, as identified in Item 6, will be adequate to protect this structure. A fire protection assessment will be conducted upon completion of construction to verify proper installation of required fire protection features, but it is anticipated that no further items will be required.

Appendix D

Agency Comments and Resolutions from the NPTF 30% Design Review

PARSONS

PROJECT DOCUMENT REVIEW RECORD

DOCUMENT TITLE/DESCRIPTION: 30 Percent Design for the New Pump and Treat Facility for Test Area North Groundwater Remediation, Operable Unit 1-07B

DATE: December 14, 1998 **REVIEWER:** EPA

ITEM NUMBER	SECTION NUMBER	PAGE NUMBER	COMMENT	RESOLUTION
			GENERAL COMMENTS	
1			Full sized engineering drawings should be provided for the 90% Design submittal. We would also expect the 90% to include pipe stress calculations given the selected pipe sizing.	D size drawings will be provided. Stress calculations will be performed for the long runs of external piping in the 90% design.
2			The text indicates that the average flow rate is 150 gpm and the maximum flow rate is 250 gpm. The text also indicates that the treated water will be reinjected into well TAN- D1. Apparently, it has been assumed that all treated water can be reinjected into one well. This may not be the case nor is D-1 located along the central axis of the distal plume. Please discuss this issue in the text and confirm whether or not the aquifer near the one well, TAN-D1, can hydraulically accommodate this volume of recharge. It may be that additional reinjection wells are necessary to accommodate this volume of reinjection water. If so, additional reinjection wells should be shown on the process flow diagrams.	The hydraulic characteristics of TAN-D1 will be evaluated and the results will be documented in the 90% design.
3			No provision is made for treatment of metals or non-aqueous phase liquid (NAPL). The 90% Design should include a discussion of the potential for metal or NAPL contamination. In addition, there should be a discussion on the need to control iron and manganese, which will foul the air stripper and create maintenance problems. If iron and manganese are a concern, then a filter may be necessary in the treatment system before the air stripper.	Sampling from the extraction wells during WCE actually showed no detection of metals or NAPL contamination. Unless another use for the NPTF is identified these contaminants will not be a problem. In addition iron and manganese are not a problem with low profile stacked tray air strippers. Periodic cleanings will be specified in the operation procedures. Text will be included in the RAWP to address what would happen during upset conditions and allow continued operations.
4			The text indicates that there is no need for off-gas treatment for VOC from the air strippers. However, a demister should be added to the off-gas so as to reduce the amount of water vapor leaving in the off-gas and to return the condensed vapor for treatment.	A demister will be provided as part of the air stripper.

PARSONS

PROJECT DOCUMENT REVIEW RECORD

DOCUMENT TITLE/DESCRIPTION: 30 Percent Design for the New Pump and Treat Facility for Test Area North Groundwater Remediation, Operable Unit 1-07B

DATE: December 14, 1998 **REVIEWER:** EPA

ITEM NUMBER	SECTION NUMBER	PAGE NUMBER	COMMENT	RESOLUTION
5			The text does not discuss the need to winterize the supply and discharge lines; neither does it discuss the need for an emergency power generator. These issues need to be discussed.	Winterization aspects will be included in the 90% design. Emergency power will be addressed with the winterization components.
SPECIFIC COMMENTS				
Functional and Operational Requirements				
6	3.1 1st bullet		The objective of the facility is to initiate dissolved phase cleanup, capture the medial plume as defined by the 1ppm TCE iso-concentration contour, and treat extracted groundwater to MCLs in accordance with the ROD.	Agree. Text will be modified.
7	Section 3.1, Page 3-1		This section lists the general system requirements. Although an uptime of at least 90 percent is specified, no requirement states what the longest allowable period of downtime will be at any one time.	>90% will be used as a reliability factor for design of the system and system components. The allowable downtime will be addressed in the RAWP.
8	Section 3.4.2:		I presume that the fire protection design criteria will be in accordance with DOE Standard, DOE-STD-1066-97?	The fire protection review will be performed by the facility fire engineer. The outcome of this review will determine fire protection requirement applicable to this system. The review will be performed in accordance with DOE Orders.
9	Section 3.6:		I presume the reference to Subpart J is actually a reference to the substantive portions of 40 CFR 264.192. To avoid confusion, the specific cites should be given.	This section references Subpart J in general because all of Subpart J is applicable to this system.
10	Section 3.6.1.1:		Table 3.1 should provide the historical calculated mean and standard deviation for each parameter for which the design influent concentrations are based.	Table 3-1 lists the design concentrations and states that these numbers were obtained during the WCE activities. Calculation of these numbers can be reviewed in the WCE report. The design values will be evaluated to ensure they represent a 95% confidence level.

PARSONS

PROJECT DOCUMENT REVIEW RECORD

DOCUMENT TITLE/DESCRIPTION: 30 Percent Design for the New Pump and Treat Facility for Test Area North Groundwater Remediation, Operable Unit 1-07B

DATE: December 14, 1998 **REVIEWER:** EPA

ITEM NUMBER	SECTION NUMBER	PAGE NUMBER	COMMENT	RESOLUTION
11	Section 3.6.1.3:		The issue of metals should be discussed. An example statement could state that no metals were identified as Contaminants of Concern nor found to exceed MCLs, in the ROD.	Based on results obtained during the WCE test, there is not a metals issue. Therefore, we do not believe it is necessary to address metals in the F&ORs. A contingency plan will be included in the RAWP for possible high contaminant conditions.
12	Section 3.6.2:		Will the facility be designed for a sustained flow rate of 250gpm with a 90% up time and throttled back for the 150gpm initial influent rate? The size of the Air Strippers at 125gpm each requires that both units be in continuous operation.	Both units will be ran continuously. It was assumed that the 90% uptime could be obtained by running one train @ 125 gpm for limited durations, if needed. During normal operations each train would be throttled back to 75 gpm.
13	*Section 3.6.5:		The specification for secondary containment derives from the substantive requirements of 40CFR264.193. The specific cites should be provided.	The requirement is part of Subpart J.
14	*Section 4.1, RCRA		Section 3020 of the statute is also a ROD-based ARAR.	Agree. This citation will be added.
15	Section 4.1, UIC		Table 10-1 of the ROD only lists IDAPA 37.03.03 under UIC. IDAPA 16.01.08 requirements are listed under the topic of ID Public Drinking Water.	Agree. Heading will be added.
16	Section 4.1, RCRA		40 CFR 264, Subpart X is missing from the list.	The assumption is that the air strippers will be regulated in accordance with Subpart J (Tank Systems). Therefore, Subpart X does not apply to the design of this system.
17	Section 4.2		DOE Order 5400.5 should be listed as a TBC consistent with the ROD.	No rad will be processed through this system and therefore this order does not apply.
18	*Section 4.3		I presume that this is only an example listing of industry standards? For example, will piping be designed in conformance with ASME B31.3, for Chemical Plant piping? To serve as a Requirements document, all applicable standards categories should be listed.	The specific requirements will be addressed in the system specifications that will be included in the 90% design.

PARSONS

PROJECT DOCUMENT REVIEW RECORD

DOCUMENT TITLE/DESCRIPTION: 30 Percent Design for the New Pump and Treat Facility for Test Area North Groundwater Remediation, Operable Unit 1-07B

DATE: December 14, 1998 **REVIEWER:** EPA

ITEM NUMBER	SECTION NUMBER	PAGE NUMBER	COMMENT	RESOLUTION
19	*Section 4.4:		The Risk Category should be expanded to address *NCP Short Term Risk* concerns. Also, even if the facility is classified as <Category 3, 10CFR 835 may apply along with DOE Standard, DOE-EM-STD-5502-94.	The facility is classified as "less than category 3." The design will be completed based on requirement applicable to this categorization.
30% Design				
20	Section 1.1, Page 1-1, 1st Bullet		Will the capacity for a 250gpm influent rate be sustainable on a 24hrs/day, 7days/week basis?	The design will provide the capability to process @ 250 gpm on a sustainable basis.
21	Section 1.1, Table 1-1, Page 1-2		The table indicates that the tray air stripper design is based on an influent concentration for each of 4 volatile organic compounds. Please discuss whether these VOC concentrations are average or maximum concentrations, especially at maximum flow rates. The text or table should clearly state the average design VOC concentrations and the maximum design VOC concentrations. The table should also include the Henry's constant for each VOC to give the reader an understanding of the relative volatility of each VOC, and the text should indicate which VOC controls the design.	VOC concentrations are the design concentrations determined from the WCE activities. The table states the design concentrations. These are considered maximum concentrations. Therefore, the operational range will conservatively cover the expected concentration ranges. The design will be evaluated for each of the VOC's. Even though TCE is probably the controlling contaminant there is no need to specify that in the design document.
22	Section 1.1, Table 1-1, Page 1-2		The text indicates in Table 1-1 that only 4 VOCs are present in the influent. Vinyl chloride should also be included as a requirement, since it is a by-product of perchlorethene or trichloroethene dechlorination.	The table indicates there are only 4 VOC in the influent that need to be considered during design of the air strippers. Vinyl chloride is most likely present in very small quantities but has not been present at detectable levels. Because of the volatility of vinyl chloride if it is present it will easily be removed using the air stripper system. Vinyl chloride will be evaluated in the air discharge modeling. This will set an allowable discharge limit for VC. Analysis will be included in compliance monitoring.
23	Section 2.3, Page 2-1, Paragraph 1		The text should state whether the surge tank is sized for 10 minutes at average flow or 10 minutes at maximum flow. In either case, the text should state the detention time for both average and maximum flow.	The surge tank is sized for maximum flow.

PARSONS

PROJECT DOCUMENT REVIEW RECORD

DOCUMENT TITLE/DESCRIPTION: 30 Percent Design for the New Pump and Treat Facility for Test Area North Groundwater Remediation, Operable Unit 1-07B

DATE: December 14, 1998 **REVIEWER:** EPA

ITEM NUMBER	SECTION NUMBER	PAGE NUMBER	COMMENT	RESOLUTION
24	Section 2.4, Page 2-2, Paragraph 1		The text states that the concrete curbing will provide for 100 percent containment around the surge tank, air stripper, etc. Although this is in accordance with 40CFR 264.193(d), the concrete curbing should be sized to for an additional 10% freeboard.	A 10% increase in volume will be used when sizing the containment capacity.
25	Section 3, Table 3-1, Page 3-2		Table 3-1 on Page 3-2 indicates that the air stripper has a 99.9 % removal efficiency for TCE at 125 gpm, presumably at the concentration specified in Table 1-1. Please indicate the influent TCE concentration and air stripper removal efficiency at 250gpm?	The 99.9% removal efficiency is what is needed to remove the concentrations listed in Table 3-1 at 125 gpm (max flow for a given train). The same efficiency will apply to both trains. The 250 gpm flowrate is obtained by running both trains at the same time. 250 gpm will not be processed through a single air stripper.
26	Section 4, Page 4-1, Paragraph 1		The air emission calculations are based solely on trichlorethene (TCE), apparently because it has the highest influent concentration. Please include the air emissions for other anticipated VOCs. The short term risk to down winders would be based on the combined potential health effects not single constituents. A table should show the influent VOC concentration in water, the emission concentration in micrograms per cubic meter of air to be discharged, and the pounds per hour emission rate for each VOC.	The limit is not based on the fact that TCE has the highest concentration. It is based on the fact that TCE has a significantly lower concentration that is allowable for release. The TCE release limit is 0.185 lbs/hr while the release limit for PCE and DCE are 5 lbs/hr and 1254 lbs/hr respectively.
27	Dwg .No. PF-1:		Providing a Process Flow legend is very much appreciated, especially as some of the symbols are different from those typically used by DOE. For example, the butterfly valve, ball valve and tank symbology is different from that provided in the DOE-HDBK-1016/1-93, concerning Engineering Symbology	No response required.

PARSONS

PROJECT DOCUMENT REVIEW RECORD

DOCUMENT TITLE/DESCRIPTION: 30 Percent Design for the New Pump and Treat Facility for Test Area North Groundwater Remediation, Operable Unit 1-07B

DATE: December 14, 1998 **REVIEWER:** EPA

ITEM NUMBER	SECTION NUMBER	PAGE NUMBER	COMMENT	RESOLUTION
28	Dwg. PFD-1:		*a. The use of globe valves on P-33, P-36, P-38, P-39, and P-40 are preferred for operations requiring throttling. The symbology suggests manual control. Given the commitment for a <10% down time, would it not be preferable to have motor controls on the pumping well valves so adjustments can be made in the Treatment Building? The combined influent flow into the surge tank could fill the tank in <6min.	a. Being able to adjust flowrates from the treatment building would be very convenient. However, the actual flowrates from the wells are not something that should be changing very often, and it should not be a problem going to each well head to adjust the flowrate. If it remains manually controlled the flowmeter will transmit the flowrate to the building for dual display.
			b. Although globe valves are preferred for throttling operations, ball valves allow easy visual detection of whether lines are open or closed which may be of value for the 2" input and bypass lines to the air strippers.	b. Globe valves were used to allow easier control of flow through these lines. Other components (flow meters) will be present to provide an easy visual detection of flow.
			*c. Instead of using a 3,000gal. Surge Tank, has any thought been given to a 300gpm oil/water separator with coalescing media? It could serve the same function as the Surge Tank, while providing added protection to the downstream air strippers if a slug of nonaqueous contamination were captured. Given the 30 yr. planned life of the facility, this contingency is not unreasonable.	c. Based on all data present and the fact that no oil has been present in any well except TSF-05, there is no reason to believe there will ever be slugs of oil extracted at these locations. This would only be needed if water/waste was introduced from alternate sources.
			*d. The selection of two (2) £125gpm Air Strippers appears inefficient, as both air strippers must be run continuously. Companies like QED Environmental Systems, for example, manufacture a 150gpm removable tray air stripper. Their Model 24.4 is similar in footprint to the proposed design shown on Dwg. C-1. The blower horsepower for their unit is higher, however, at 15hp. Their £100gpm model is rated at 7.5hp? Applying the 6/10ths cost rule, the increase in size should only represent a 12% increase in capital cost,	d. The two trains using the same components have two advantages. 1) If one train goes down the other could continue to run and maintain operational uptime and 2) the systems would utilize the same parts and fewer spares would be required to be on hand. The alternative presented was considered prior to the 30% design.

PARSONS

PROJECT DOCUMENT REVIEW RECORD

DOCUMENT TITLE/DESCRIPTION: 30 Percent Design for the New Pump and Treat Facility for Test Area North Groundwater Remediation, Operable Unit 1-07B

DATE: December 14, 1998 **REVIEWER:** EPA

ITEM NUMBER	SECTION NUMBER	PAGE NUMBER	COMMENT	RESOLUTION
			but allow periods when one air stripper could be taken off line without loss of the hydraulic capture zone.	
			e. The by-pass line on each of the two air strippers either has the flow direction arrow going in the wrong direction or should be re-labeled as a recirculation line . Please correct this.	e. This line is a recirulation line. Labeling will be changed.
			f. The figure shows a transfer pump (P-301 2 HP). Please indicate in the figure and in the text where this pump is pumping from. This pump may lead from the containment sump, but this is not clear.	f. This line will have a quick connect and be able to connect to various sources. Other sources could be the building sump, transfer tanks etc. Pumping location is not specific.
			g. The figure shows a "T" connection in the piping just after the surge tank and at the point after the air strippers where the two effluent lines come together. It may be more appropriate to show a surge box or some other device at these locations, because a "T" connection could not be hydraulically implemented.	g. Specific pipe fittings will be specified in the 90% design pipe layout drawings. "T" connections can be used if properly configured.
			h. The figure does not show a drain line on the surge tank or air strippers. Please indicate in the text and in the figure how these system components would be drained for repair or some other emergency condition.	h. Drain lines will be shown in the 90% design.
			i. The figure shows the pipe diameter after the discharge pumps from the air strippers as being 1.5 inches. This may unnecessarily restrict the flow. Please discuss the rationale for this relatively small diameter piping or increase it in the figure to 2 inch diameter as is the other piping. Pipe size reductions occur across both P-302/P-303 (air stripper feed pumps), and across P-304/P-305 (air stripper effluent pumps). The pipe size is reduced from a three inch to two inch pipe across the feed pumps, and from two inch	i. Pipe size reductions are due to the design of most pumps. The pumps are selected to match the flowrate and inlet pipe size. The pump effluent pipe is sized to match the pump effluent connections and then enlarged to match the desired pipe size for flow and pressure. The restriction this adds to the system is minimal.

PARSONS

PROJECT DOCUMENT REVIEW RECORD

DOCUMENT TITLE/DESCRIPTION: 30 Percent Design for the New Pump and Treat Facility for Test Area North Groundwater Remediation, Operable Unit 1-07B

DATE: December 14, 1998 **REVIEWER:** EPA

ITEM NUMBER	SECTION NUMBER	PAGE NUMBER	COMMENT	RESOLUTION
			to one and a half inch pipe across the effluent pumps. The rationale for these reductions is unclear. This reduction increases the load on the pumps, the head loss across pipes, and places unacceptably high force loads on all pipe bends after the reductions. These higher force loads, particularly over a thirty-year life, will increase maintenance costs. It is strongly recommended that all one and a half inch and two inch pipe be increased to three inch pipe.	The reduction is required to match the pipe to the pump.
29	Dwg. C-1:		*a. Should a sump pump with float switch and alarm transmitter, piped to the Surge tank with check valve be inserted to minimize standing water in the building in case of pump seal failure or other leakage source? Is this the purpose of P-301? An automatic system could reduce the urgency of operator response to leaks during off-hours and provide a built-in continuous leak detection system for large releases. b. The drawing shows a 6" wide curbing. The length of the horizontal projection of the graded flooring appears to be 15.5ft in the area of the Air Stripper and 19ft in the storage tank area. The elevation at grid column 8 is the same as that at grid column 3? Is the elevation discrepancy accounted for in the slope of the grating? c. What is the inward slope of the grated area? d. What is the volume capacity under the grating? *e. Is the secondary containment equal to or greater than 3,000gal?	a. Details of the sump and mechanisms to remove any water from the sump will be provided in the 90% design. The system will have float switches to shut the system down and make notifications. However, an automatic water removal system will not be provided. It is felt that the source of leakage should be determined prior to pumping out the water. b. Details of the floor and sump will be provided in the 90% design. With the different lengths on each side of the sump a different slope will be constructed. c. The slope will be determined and provided in the 90% design. e. Greater than 3000 gal.

PARSONS

PROJECT DOCUMENT REVIEW RECORD

DOCUMENT TITLE/DESCRIPTION: 30 Percent Design for the New Pump and Treat Facility for Test Area North Groundwater Remediation, Operable Unit 1-07B

DATE: December 14, 1998 **REVIEWER:** EPA

ITEM NUMBER	SECTION NUMBER	PAGE NUMBER	COMMENT	RESOLUTION
30	Dwg. P-1:		a. The symbol for sampling points is not found on the legend.	a. Agree. The symbol will be added.
			b. Will the high level switch on the Surge Tank be connected to Alarm transmitter?	b. It will be connected to the automatic controls.
			*c. This is no indication of a high-high level sensor with power cutoff to well pumps to prevent overtopping the surge tank.	c. Details will be provided in the 90% design.
			*d. The 90% P&IDs should identify how each valve will fail.	d. This will be provided by auto controlled valves that are either open or closed.
			e. The figure does not show any sample ports on the individual extraction well lines. Please include sample ports on each extraction well line.	
			f. A high level switch is shown on the air strippers, but a low level switch is not shown in the figure to prevent the discharge pumps from pumping dry. Please add a low level switch to the air strippers or discuss the rationale for not having this switch.	f. All instrumentation and control will be specified in the 90% design and will include a low level shutoff switch.
			g. A high level switch is not shown on the reinjection well(s) to prevent an overflow condition at the reinjection wells. Please add a high level switch on the reinjection wells that would decrease flow through the treatment system in the event that a high water condition occurred at the reinjection well(s).	g. A high level switch will be added. System response will be evaluated and included in the 90% design.

PARSONS

PROJECT DOCUMENT REVIEW RECORD

DOCUMENT TITLE/DESCRIPTION: 30 Percent Design for the New Pump and Treat Facility for Test Area North Groundwater Remediation, Operable Unit 1-07B

DATE: December 14, 1998 **REVIEWER:** IDHW-DEQ

ITEM NUMBER	SECTION NUMBER	PAGE NUMBER	COMMENT	RESOLUTION
1	1.1	1-1	a) Second Bullet: Well TAN-D1 is a permitted storm water injection well. Use of this well for a remediation re-injection well would be a new use not covered by the existing permit. Please note that to use this well for a remediation re-injection well, USDOE will need to obtain permission for the new use from the Idaho Department of Water Resources (IDWR). Although IDWR granted permission for the OU 1-7B project to use well TAN-D1 for re-injection during the well characterization effort in 1997, that effort only lasted a few weeks. Whereas obtaining permission from the IDWR for long term use of this well may be possible, DEQ suggests that alternative re-injection locations be considered as contingencies.	a) Agree. Long-term use of TAN-D1 would require submittal of a request for a new use as a re-injection well.
			b) Fourth Bullet: This statement indicates that the maximum length of time needed for unmanned operations is 4 days. It is unclear whether the unmanned operation period also addresses holidays. Please note that the maximum acceptable downtime for the NPTF should be evaluated by the agencies. Determination of this criteria will be based on maintaining an acceptable degree of hydraulic containment.	b) The four days is a minimum to be used for design. This addresses any intervention required by an operator (i.e., add chemicals, perform maintenance, etc.) The system will most likely not require intervention for periods much longer than 4 days. Text will be modified to clarify. The maximum acceptable downtime for the NPTF will be evaluated during the development of the compliance monitoring strategy that will be included in the RAWP. Preliminary information regarding the acceptable downtime will be provided to the agencies for discussion prior to completion of the RAWP.

PARSONS

PROJECT DOCUMENT REVIEW RECORD

DOCUMENT TITLE/DESCRIPTION: 30 Percent Design for the New Pump and Treat Facility for Test Area North Groundwater Remediation, Operable Unit 1-07B

DATE: December 14, 1998 **REVIEWER:** IDHW-DEQ

ITEM NUMBER	SECTION NUMBER	PAGE NUMBER	COMMENT	RESOLUTION
2	2	General Comment	The text should describe the system's ability to receive influent waters from sources other than the designated extraction wells (such as purge water from monitoring wells).	Agree, text will be modified.
3	2.1	2-1	The text indicates that air stripper effluent will be "considered to no longer contain listed hazardous waste and may be discharged to TAN-D1 without having to comply with the requirements of RCRA." This is not necessarily true, and the sentence should be modified. We suggest that the phrase "without having to comply with the requirements of RCRA" be deleted. In addition, please note that No Longer Contained-in (NLCI) determinations are made through the DEQ Hazardous Waste Permitting Bureau (HWPB). USDOE/LMITCO must provide information to HWPB documenting the rationale for why the effluent stream no longer contains a listed hazardous waste. The commitments for any conditions/requirements placed on approval of a NLCI determination (e.g., reporting and/or monitoring requirements) should be incorporated into appropriate CERCLA documentation such as the Remedial Action Work Plan.	This statement is made under the assumption that a NLCID will be obtained for the system effluent. Page 5-1 lists this as an assumption. As with all other NLCID requests we have submitted, a written request will be submitted for this discharge stream. Efforts will be made to submit this request as soon as possible so that conditions of the NLCID can be incorporated into the RAWP.
4	3 Table 3-1	3-2	Please verify that the polypropylene paddle in sensor #318 ahead of the surge tank will be compatible with the influent concentrations of organics expected to be present.	Polypropylene is compatible with the influent concentrations expected.
5	4	4-1	Further documentation should be provided to support the contention that the GWTF modeling can appropriately be used for the new system.	New modeling for air emissions will be prepared prior to completion of the 90% design for the NPTF. The results of the modeling will be provided to IDHW as soon as it becomes available.

PARSONS

PROJECT DOCUMENT REVIEW RECORD

DOCUMENT TITLE/DESCRIPTION: 30 Percent Design for the New Pump and Treat Facility for Test Area North Groundwater Remediation, Operable Unit 1-07B

DATE: December 14, 1998 **REVIEWER:** IDHW-DEQ

ITEM NUMBER	SECTION NUMBER	PAGE NUMBER	COMMENT	RESOLUTION
6	Appendix A, Diagram PFD-1		The hose connection to transfer pump P-301 is inside the building. It is assumed that this connection is provided for the transfer of purge water for treatment before discharge. Please note the proposed use of this connection on the diagram.	The use of the transfer pump will be addressed in the text. Access to the transfer pump will be evaluated during the 90% design.
7	Appendix A, Diagram C-1 & E-1		There does not appear to be a sump pump for clearing water from the sump shown on Diagram C-1. The electrical diagram does not show any provision for a sump pump. Please explain how fluid will be removed from the sump.	The 30% design did not address water removal from the sump. This will be addressed in the 90% design. An evaluation will be performed to determine if a portable pump or dedicated pump will be used.
8	Appendix A, Diagram P-6		a) Also, the hose connection to the transfer pump does not extend to the outside of the building. Please note on the diagram how this connection will be made since there is no apparent opening in the building in this general area. b) We cannot determine from the text or drawing, how the secondary containment requirements for the interior portions of the NPTF will be met. It is suggested that a small section drawing be added to this diagram, or another more appropriate diagram, that shows the vertical extension of the footer/slab around the perimeter of the building to ensure that releases resulting from leaks/spills will be detected and contained.	a) Access will be provided. Details will be provided in the 90% design. b) The 30% design shows the plan view layout of the facility. Upon approval of the 30% design layout the secondary containment features will be designed and the details provided in the 90% design. Section 2.4 "Air Stripper Building" discusses the general features of secondary containment.