Next Section

Supplement to the Draft Environmental Impact Statement

for a

Geologic Repository for the Disposal of Spent Nuclear Fuel and High-Level Radioactive Waste at Yucca Mountain, Nye County, Nevada

U.S. Department of Energy
Office of Civilian Radioactive Waste Management

DOE/EIS-0250D-S

May 2001

ACRONYMS AND ABBREVIATIONS

To ensure a more reader-friendly document, the U.S. Department of Energy (DOE) limited the use of acronyms and abbreviations in this Supplement. Acronyms and abbreviations are defined the first time they are used in each chapter. Acronyms and abbreviations used in tables and figures because of space limitations are listed in footnotes to the tables and figures.

CFR	Code of Federal Regulations
DOE	U.S. Department of Energy
EIS	environmental impact statement
FR	*Federal Register*
MTHM	metric tons of heavy metal
NEPA	National Environmental Policy Act of 1969, as amended
PM_{10}	particulate matter with an aerodynamic diameter of 10 micrometers or less
S&ER	*Yucca Mountain Science and Engineering Report: Technical Information Supporting Site Recommendation Consideration*
USC	United States Code

Supplement to the Draft Environmental Impact Statement

for a

Geologic Repository for the Disposal of Spent Nuclear Fuel and High-Level Radioactive Waste at Yucca Mountain, Nye County, Nevada

U.S. Department of Energy
Office of Civilian Radioactive Waste Management

DOE/EIS-0250D-S

May 2001

Printed on recycled paper with soy ink.

COVER SHEET

RESPONSIBLE AGENCY: U.S. Department of Energy (DOE)

TITLE: *Supplement to the Draft Environmental Impact Statement for a Geologic Repository for the Disposal of Spent Nuclear Fuel and High-Level Radioactive Waste at Yucca Mountain, Nye County, Nevada* (DOE/EIS-0250D-S)

CONTACT: For more information on this Supplement to the Draft Environmental Impact Statement (EIS), write or call:

Jane R. Summerson, EIS Document Manager
Yucca Mountain Site Characterization Office
Office of Civilian Radioactive Waste Management
U.S. Department of Energy
P.O. Box 30307, M/S 010
North Las Vegas, NV 89036-0307
Telephone: (800) 967-3477

The Draft EIS and this Supplement are available on the Internet at the Yucca Mountain Project web site at *http://www.ymp.gov* and on the DOE National Environmental Policy Act (NEPA) web site at *http://tis.eh.doe.gov/nepa/*.

For general information on the DOE NEPA process, write or call:

Carol M. Borgstrom, Director
Office of NEPA Policy and Compliance (EH-42)
U.S. Department of Energy
1000 Independence Avenue, S.W.
Washington, D.C. 20585
Telephone: (202) 586-4600, or leave a message at (800) 472-2756

ABSTRACT: The Proposed Action addressed in the Draft EIS is to construct, operate and monitor, and eventually close a geologic repository at Yucca Mountain in southern Nevada for the disposal of spent nuclear fuel and high-level radioactive waste currently in storage or projected to be generated at 72 commercial and 5 DOE sites across the United States. Since issuing the Draft EIS, dated July 1999, DOE has continued to investigate design options and operating modes that would reduce uncertainties about repository performance and improve operational safety and efficiency.

This Supplement to the Draft EIS addresses the latest repository design information and the corresponding environmental impact analyses. DOE will integrate the information in this Supplement, as well as public comments on the Supplement and the Draft EIS and DOE responses to those comments, in the Final EIS.

PUBLIC COMMENTS: A 45-day public comment period on this Supplement begins with the publication by the Environmental Protection Agency of a Notice of Availability of the Supplement in the *Federal Register*. DOE will hold one or more public hearings to receive oral and written comments on this Supplement at time(s) and location(s) to be announced in local media and in a Notice of Availability that DOE will publish in the *Federal Register.* DOE will consider all comments postmarked within the comment period, and will consider comments received after the end of the comment period to the extent practicable. Written comments can be submitted by U.S. mail to Jane R. Summerson at the above address, via the Internet at *http://www.ymp.gov*, and at public hearing(s).

TABLE OF CONTENTS

Section		Page
Summary		S-1
1	Introduction	1-1
1.1	Background	1-1
1.2	Scope	1-1
1.3	Document Organization and Contents	1-3
2	Design Evolution	2-1
2.1	Proposed Action	2-1
2.2	Overview of Design Evolution	2-3
2.2.1	Design Evolution	2-4
2.2.2	Operational Evolution	2-6
2.2.2.1	Draft EIS Scenarios	2-7
2.2.2.2	S&ER Flexible Design Operating Modes	2-7
2.2.2.2.1	Higher-Temperature Repository Operating Mode	2-7
2.2.2.2.2	Lower-Temperature Repository Operating Mode	2-8
2.3	S&ER Flexible Design	2-9
2.3.1	Overview	2-9
2.3.2	Repository Surface Facilities and Operations	2-12
2.3.2.1	North Portal Operations Area	2-12
2.3.2.2	South Portal Operations Area	2-15
2.3.2.3	Ventilation Shaft Operations Areas	2-16
2.3.2.4	Support Facilities and Utilities	2-16
2.3.2.4.1	Storage of Excavated Rock	2-16
2.3.2.4.2	Wastewater and Stormwater Facilities	2-16
2.3.2.4.3	Solid Waste Disposal and Hazardous Waste Management	2-18
2.3.2.4.4	Electric Power	2-18
2.3.2.4.5	Water Supply	2-19
2.3.2.4.6	Fossil Fuel	2-19
2.3.3	Repository Subsurface Facilities and Operations	2-19
2.3.3.1	Design and Construction	2-21
2.3.3.2	Ventilation	2-21
2.3.3.3	Waste Package Emplacement Operations	2-22
2.3.4	Engineered Barrier Design	2-23
2.3.4.1	Waste Package and Drip Shields	2-23
2.3.4.2	Ground Support Structures	2-25
2.3.4.3	Emplacement Pallets	2-25
2.3.5	Performance Confirmation Program	2-28
2.3.6	Repository Closure	2-28
2.4	Potential Future Design and Operational Evolution	2-30
3	Evaluation of Impacts	3-1
3.1	Short-Term Impacts	3-3
3.1.1	Land Use and Ownership	3-3
3.1.2	Air Quality	3-3

Section Page

3.1.2.1 Radiological Air Quality ... 3-3
3.1.2.2 Nonradiological Air Quality ... 3-4
3.1.3 Hydrology ... 3-5
3.1.3.1 Water Use ... 3-6
3.1.3.2 Land Area Disturbed ... 3-7
3.1.4 Biological Resources ... 3-7
3.1.5 Cultural Resources ... 3-8
3.1.6 Socioeconomics ... 3-9
3.1.7 Occupational Health and Safety ... 3-10
3.1.8 Accidents ... 3-11
3.1.9 Noise ... 3-11
3.1.10 Aesthetics ... 3-12
3.1.11 Utilities, Energy, and Materials ... 3-12
3.1.11.1 Electric Power ... 3-12
3.1.11.2 Fossil Fuels ... 3-13
3.1.11.3 Construction Material ... 3-13
3.1.12 Management of Repository-Generated Waste and Hazardous Materials ... 3-14
3.1.12.1 Construction and Demolition Debris ... 3-14
3.1.12.2 Hazardous Waste ... 3-15
3.1.12.3 Sanitary and Industrial Solid Waste ... 3-15
3.1.12.4 Sanitary Sewage and Industrial Wastewater ... 3-15
3.1.12.5 Low-Level Radioactive Waste ... 3-15
3.1.13 Environmental Justice ... 3-16
3.1.14 Transportation ... 3-16
3.1.15 Offsite Manufacturing ... 3-18
3.2 Long-Term Impacts ... 3-19
3.2.1 Important Design Enhancements ... 3-20
3.2.2 Changes to the Assessment Model for Long-Term Performance ... 3-20
3.2.3 Results for Long-Term Performance ... 3-20
3.3 Cumulative Impacts ... 3-22

Appendix

A References ... A-1
B Glossary ... B-1
C Preparers, Contributors, and Reviewers ... C-1
D Distribution List ... D-1
E Index ... E-1

LIST OF TABLES

Table Page

2-1 Summary of key underground design and operating parameters associated with thermal load scenarios and repository operating modes 2-6

3-1 Primary impact indicators for the Draft EIS design and the S&ER flexible design 3-2
3-2 Primary impact indicators for air quality 3-4
3-3 Primary impact indicators for hydrology 3-6
3-4 Primary impact indicator for biological and cultural resources 3-8
3-5 Primary impact indicator for socioeconomics 3-9
3-6 Primary impact indicators for occupational health and safety 3-10
3-7 Primary impact indicators for accidents 3-11
3-8 Primary impact indicators for utilities, energy, and materials 3-12
3-9 Primary impact indicators for repository-generated waste 3-14
3-10 Primary impact indicators for transportation 3-17
3-11 Quantities of offsite-manufactured components for the proposed Yucca Mountain Repository 3-18
3-12 Basic structure of the Total System Performance Assessment model 3-20
3-13 Changes to the Total System Performance Assessment model 3-21
3-14 Primary impact indicators for long-term performance 3-22

LIST OF FIGURES

Figure Page

2-1 Diagram and location of the proposed repository at Yucca Mountain 2-2
2-2 Artist's conception of water flow around emplacements for example higher- and lower-temperature repository operating modes of the S&ER flexible design 2-5
2-3 Monitored geologic repository milestones used for analysis 2-10
2-4 Potential repository surface facilities site plan 2-13
2-5 Key components of Waste Handling Building operations 2-14
2-6 S&ER flexible design higher-temperature repository operating mode preclosure ventilation air flow in primary block 2-17
2-7 Proposed Action repository layouts for the Draft EIS high, intermediate, and low thermal load scenarios, and the S&ER flexible design operating mode 2-20
2-8 S&ER flexible design waste package for commercial spent nuclear fuel (pressurized-water reactor waste package) 2-24
2-9 Drip shield and waste package containing commercial spent nuclear fuel with drip shields in place 2-26
2-10 Typical section of emplacement drift with waste packages and drip shields in place 2-27
2-11 S&ER flexible design emplacement pallet 2-29
2-12 S&ER flexible design waste package on an emplacement pallet 2-29

Summary

SUMMARY

The U.S. Department of Energy (DOE, or the Department) issued the *Draft Environmental Impact Statement for a Geologic Repository for the Disposal of Spent Nuclear Fuel and High-Level Radioactive Waste at Yucca Mountain, Nye County, Nevada* (Draft EIS), dated July 1999, in accordance with the National Environmental Policy Act of 1969, as amended (42 USC 4321 *et seq.*), and the Nuclear Waste Policy Act, as amended (42 USC 10101 *et seq.*). The Draft EIS describes the Proposed Action to construct, operate and monitor, and eventually close a repository at Yucca Mountain, and the potential environmental impacts of that action.

For the Draft EIS, DOE based the analysis on a design described in the *Viability Assessment of a Repository at Yucca Mountain* to estimate potential environmental impacts from the Proposed Action. The Draft EIS discussed ongoing evaluations (see page 2-10 of the Draft EIS for an example) that could result in modifications to that design.

As DOE anticipated in the Draft EIS, the repository design has continued to evolve, reflecting evaluations of design options and ways in which to operate the repository (operating modes) that would reduce uncertainties and improve long-term performance and operational safety and efficiency. DOE has documented the evolution of the design in the *Yucca Mountain Science and Engineering Report: Technical Information Supporting Site Recommendation Consideration,* which describes the current design (which this Supplement calls the *S&ER flexible design*) and a range of possible repository operating modes and summarizes technical information that the Secretary of Energy will use to determine whether to recommend approval of the Yucca Mountain site to the President for development as a repository. The fundamental aspects of the repository design have not changed from the design discussed in the Draft EIS.

The S&ER flexible design includes the ability to operate the repository in a range of operating modes that address higher and lower temperatures and associated humidity conditions. *Higher-temperature* means that at least a portion of the emplacement drift rock wall would have a maximum temperature above the boiling point of water at the elevation of the repository [96ºC (205ºF)]. The *lower-temperature* operating mode ranges include conditions under which the drift rock wall temperatures would be below the boiling point of water, and conditions under which the waste package surface temperature would not exceed 85ºC (185ºF). To bound the impact analysis, DOE considered conditions under which the rock wall temperatures would be above the boiling point of water, and conditions under which waste package surface temperatures would not exceed 85ºC.

DOE prepared this Supplement to update information presented in the Draft EIS. The Supplement evaluates potential environmental impacts that could occur, based on the design and range of possible operating modes of the S&ER flexible design. In addition, the Supplement compares these impacts to the impacts presented in the Draft EIS.

The basis for the analytical scenarios presented in the Draft EIS was the amount of commercial spent nuclear fuel and its associated thermal output or load that DOE would emplace per unit area of the repository (called *areal mass loading*). In the Draft EIS, DOE evaluated three thermal load scenarios including *high thermal load*, a relatively high emplacement density of commercial spent nuclear fuel [85 metric tons of heavy metal (MTHM) per acre], *intermediate thermal load* (60 MTHM per acre), and *low thermal load* (25 MTHM per acre). The analytical scenarios described in the Draft EIS were not intended to place a limit on the choices among alternative designs because DOE expected that the repository design would continue to evolve. Rather, DOE selected these scenarios to represent the range of foreseeable design features and operating modes and to ensure that it considered the associated range of potential environmental impacts.

In contrast to focusing on thermal loads, the S&ER flexible design focuses on controlling the temperatures of the rock between the drifts, of the waste package surfaces, and of the drift walls to meet thermal management goals established for possible repository operating modes. To meet these thermal goals, the S&ER flexible design uses a *linear thermal load* (heat output per unit length of the emplacement drift) and emplaces waste packages relatively closer together than the Draft EIS design. Linear thermal load is expressed in terms of kilowatts per meter.

As with the thermal load analytical scenarios analyzed in the Draft EIS, the range of operating modes under the S&ER flexible design is representative of the range of foreseeable future design features and operating modes, and the conservative estimates of the associated potential environmental impacts in this Supplement encompass or bound the potential impacts of foreseeable future repository design evolution.

This Supplement focuses on modifications to the repository design and operating modes addressed in the Draft EIS; it does not analyze aspects of the Proposed Action that have not been modified, such as the transportation of spent nuclear fuel and high-level radioactive waste, or the No-Action Alternative. DOE will address the Proposed Action and the No-Action Alternative fully in the Final EIS. In addition, DOE will consider comments on the Draft EIS and on this Supplement in the Final EIS.

Because the repository design has evolved from that considered in the Draft EIS, the Final EIS will evaluate only the S&ER flexible design, including the reasonable range of operating modes, and any enhancements to the flexible design developed as the result of ongoing analyses. DOE invites comments on its intention not to address the Draft EIS design in the Final EIS.

S.1 S&ER Flexible Design

Under the Proposed Action, DOE would permanently place approximately 11,000 to 17,000 waste packages containing no more than 70,000 metric tons of heavy metal (MTHM) of spent nuclear fuel and high-level radioactive waste in a repository at Yucca Mountain.

The S&ER flexible design, which is the basis for this Supplement, includes the following modifications from the design evaluated in the Draft EIS:

- Expanded the capability of the Waste Handling Building to blend hotter and cooler commercial spent nuclear fuel assemblies to control the heat generation of the waste packages
- Added flexibility to include surface aging (or cooling) of hotter commercial spent nuclear fuel to control the heat of the waste packages
- Modified the subsurface design to enable a cooler repository, including increased ventilation
- Added a solar power generating facility to reduce the need for power from off the site
- Revised emplacement drift layout to increase drift stability
- Increased spacing between emplacement drifts to allow a moisture pathway between the drifts
- Added operational flexibility to vary the spacing between waste packages in a drift to manage the heat load
- Added drip shields of corrosion-resistant titanium over the waste packages to divert moisture

- Refined the waste package to incorporate a more corrosion-resistant outer shell (Alloy-22) and structural stainless-steel inner shell to improve overall performance
- Modified ground support in emplacement drifts to reduce uncertainties associated with changes in water chemistry (replaced concrete liner with steel sets)
- Modified the invert, which includes the structures and materials that form a platform to support the pallet and waste package, to a steel structure with ballast (fill) (replaced the concrete invert due to the potential long-term impacts of concrete alkalinity)
- Replaced waste package pedestals (supports) with corrosion-resistant pallets (Alloy-22) to improve waste package handling and reduce the potential for corrosion between the waste package and the pallet

The purpose of these modifications is to improve the long-term performance, operational safety, and efficiency of the proposed repository, and to reduce the uncertainties related to high (above-boiling) repository host rock temperatures. Modifications associated with waste package loading, waste package spacing, and ventilation are primary operational parameters because DOE could vary them to facilitate control of the maximum emplacement drift wall temperature at a point above or below the boiling point of water or control the average maximum surface temperatures of the waste packages, depending on the target thermal management goals. Table S-1 summarizes the key underground design and operating parameters associated with the repository operating modes analyzed in this Supplement and, for comparative purposes, the thermal loads presented in the Draft EIS.

Table S-1. Key underground design and operating parameters associated with thermal load scenarios and repository operating modes.

Parameter	Unit of measure	Draft EIS thermal load scenarios			S&ER flexible design operating mode	
		Low	Intermediate	High	Higher-temperature	Lower-temperature
Variable parameter						
Areal mass load	MTHM[a] per acre	25	60	85	56	25 to 56
Linear thermal load	Kilowatts per meter	(b)	(b)	(b)	1.42	0.5 to 1.0
Drift spacing	Meters	38	40	28	81	81[c]
Waste package spacing	Meters	22	5	5	0.1	0.1 to 6.4[c]
Emplacement duration	Years	24	24	24	24	24 (50)[d]
Closure duration	Years	15	6	6	10	12 to 17
Preclosure ventilation duration[e]	Years	100	100	100	100	149 to 324
Ventilation rate (forced)	Cubic meters per second in drift	0.1	0.1	0.1	15	15
External ventilation shafts (emplacement and development)	Number	5	2	2	7	9 to 17
Dependent parameter						
Underground area	Square kilometers	10.0	4.25	3.0	4.7	6.5 to 10.1
Total excavated repository volume[f]	Millions of cubic meters	14.0	5.7	4.8	4.4	5.7 to 8.8
Waste packages	Number (in thousands)	10 to 11	10 to 11	10 to 11	11 to 12	11 to 17

a. MTHM = metric tons of heavy metal.
b. The Draft EIS design did not consider linear thermal load; both waste package heat output and spacing were highly variable.
c. Drift spacing and waste package spacing would determine various areal mass loads.
d. The lower-temperature repository operating mode analysis assumed that waste emplacement with commercial spent nuclear fuel aging would occur over a 50-year period ending in 2060.
e. From start of emplacement to start of repository closure.
f. Includes existing Exploratory Studies Facility volume of 0.42 million cubic meters.

S.2 Evaluation of Impacts

This Supplement evaluates how potential impacts associated with the S&ER flexible design compare to the impacts described for the 13 environmental resource areas presented in Chapter 4 of the Draft EIS. In addition, it compares the long-term performance impacts of the S&ER flexible design to those presented in Chapter 5 of the Draft EIS. Finally, because the S&ER flexible design includes drip shields and emplacement pallets, which the design evaluated in the Draft EIS did not, this Supplement evaluates the material requirements for those items and the impacts of transporting them to Yucca Mountain.

As part of its evaluation, DOE selected *primary impact indicators* in each environmental resource area. Primary impact indicators are the most important contributors or parameters used to determine specific impacts in an environmental resource area. They are directly proportional to the specific impact, and are generally determined during an intermediate step in the impact calculation or evaluation. In some environmental resource areas—for example, those that involved the highest annual impacts—DOE selected primary impact indicators to focus the evaluation on the single project phase (such as construction) that would result in the highest impacts. The use of these indicators enables a comparison between impacts of the S&ER flexible design and those presented in the Draft EIS. The Department used the ratio of primary impact indicators to specific impacts in the Draft EIS to determine the Supplement impact estimates.

Table S-2 summarizes the environmental impacts resulting from the design evolution, as described in Chapter 3. This information indicates that, for many environmental resource areas, there would appear to be increases in the short-term impacts associated with the S&ER flexible design in comparison to those described in the Draft EIS. These increases reflect the use of the maximum operating parameters associated with the lower-temperature repository operating mode. Section 2.1.5.2 of the *Yucca Mountain Science and Engineering Report: Technical Information Supporting Site Recommendation Consideration* provides a set of sample operating scenarios, each of which would be low temperature, that exhibits the design's inherent flexibility. To perform an evaluation of the environmental impacts of the lower-temperature mode, DOE maximized each of the three primary operating parameters in turn, while assigning the remaining two parameters with the corresponding proportional values that enabled meeting the lower-temperature operating mode criteria. This Supplement reports the results of this evaluation as a range of environmental impacts, dependent on the particular operating parameter maximized for the analysis. DOE expects that the environmental impacts for the lower-temperature operating mode would fall somewhere within the ranges presented for all areas evaluated.

Changes to the cumulative impacts described in the Draft EIS would be proportional to the changes between Draft EIS impacts and those discussed in Chapter 3 of this Supplement.

Table S-2. Environmental impacts associated with the S&ER flexible design[a] (page 1 of 3).

Environmental resource area	Primary impact indicator	Draft EIS scenarios	S&ER flexible design operating mode	
			Higher-temperature	Lower-temperature
Land use and ownership	Land withdrawal	Withdraw about 600 km^2 of land under Federal control; active use of about 3.3 to 3.5 km^2.	Withdraw about 600 km^2 of land under Federal control; active use of about 4.3 km^2.	Withdraw about 600 km^2 of land under Federal control; active use of about 4.9 to 8.1 km^2.
Air quality	Radiological (Radon release, radon and decay products would account for more than 99 percent of the potential radiation dose to members of the public.)	Release 110,000 to 340,000 curies over project life (111 to 120 years). Highest dose to offsite MEI would be 1.8 millirem per year. For exposed population, projected 0.14 to 0.41 LCF.	Release 170,000 curies over project life (115 years). Highest dose to offsite MEI would be about 1.2 millirem per year. For exposed population, projected 0.22 LCF.	Release 390,000 to 800,000 curies over project life (171 to 345 years). Dose to offsite MEI would be about 1.7 to 2.6 millirem per year. For exposed population, projected 0.49 to1.0 LCF.
	Particulate matter	Release 170,000 to 180,000 kg of fugitive dust during highest year. Highest air concentration would be no more than 1.4% of the NAAQS PM_{10} annual standard of 50 mg/m^3.	Release 220,000 kg of fugitive dust during highest year. Highest air concentration would be no more than 1.7% of the NAAQS PM_{10} annual standard of 50 mg/m^3.	Release 320,000 to 380,000 kg of fugitive dust during highest year. Highest air concentration would be no more than 1.9 to 2.9% of NAAQS PM_{10} annual standard of 50 mg/m^3.
	Gaseous pollutants (NO_2 as representative)	Release 130,000 to 230,000 kilograms of NO_2 during the highest year. Highest air concentration would be no more than 0.83% of the NAAQS NO_2 annual standard of 100 mg/m^3.	Release 87,000 kg of NO_2 during highest year. Highest air concentration would be no more than 0.31% of NAAQS NO_2 annual standard of 100 mg/m^3.	Release 88,000 to 96,000 kg of NO_2 during highest year. Highest air concentration would be no more than 0.31 to 0.34% of the NAAQS NO_2 annual standard of 100 mg/m^3.
Hydrology	Water use (groundwater)	Water demand of 250 to 480 acre-feet per year would be less than lowest estimate of perennial yield (580 acre-feet per year).	Water demand of 230 acre-feet per year would be less than lowest estimate of perennial yield (580 acre-feet per year).	Water demand of 240 to 360 acre-feet per year would be less than lowest estimate of perennial yield (580 acre-feet per year).
	Disturbed area (surface water)	Disturbed area of 3.3 to 3.5 km^2.	Disturbed area of about 4.3 km^2.	Disturbed area of 4.9 to 8.1 km^2.
Biological resources	Disturbed area	Loss of 3.3 to 3.5 km^2 total, 1.8 to 2 km^2 newly disturbed area of desert soil, habitat, and vegetation. Adverse impacts to desert tortoise (individuals). Small impacts to other plants, animals, and habitat. Small impacts to wetlands.	Loss of about 4.3 km^2 total, 2.8 km^2 newly disturbed area of desert soil, habitat, and vegetation. Adverse impacts to desert tortoise (individuals). Small impacts to other plants, animals, and habitat. Small impacts to wetlands.	Loss of about 4.9 to 8.1 km^2 total, 3.4 to 6.6 km^2 newly disturbed area of desert soil, habitat, and vegetation. Adverse impacts to desert tortoise (individuals). Small impacts to other plants, animals, and habitat. Small impacts to wetlands.
Cultural resources	Newly disturbed area	Disturbance of 3.3 to 3.5 km^2 total area, with 1.8 to 2 km^2 newly disturbed. Opposing Native American viewpoint.	Disturbance of about 4.3 km^2 total area, with 2.8 km^2 newly disturbed. Location of solar power generating facility could create potential for affecting archaeological sites. Opposing Native American viewpoint.	Disturbance of about 4.9 to 8.1 km^2 total area, with 3.4 to 6.6 km^2 newly disturbed. Location of solar power generating facility could create potential for affecting archaeological sites. Opposing Native American viewpoint.

Table S-2. Environmental impacts associated with the S&ER flexible design[a] (page 2 of 3).

Environmental resource area	Primary impact indicator	Draft EIS scenarios	S&ER flexible design operating mode	
			Higher-temperature	Lower-temperature
Socioeconomics	Direct work force	Small increases in direct (47,000 worker-years through 2033) and indirect jobs from Yucca Mountain activities—less than 1%—compared to normal growth and impacts for Nye, Clark, and Lincoln Counties. Small impacts to population, economic measures, housing, and public services.	Small increases in direct (49,000 worker-years through 2033) and indirect jobs from Yucca Mountain activities compared to normal growth and impacts for Nye, Clark, and Lincoln Counties. Small impacts to population, economic measures, housing, and public services.	Small increases in direct (50,000 to 53,000 worker-years through 2033) and indirect jobs from Yucca Mountain activities compared to normal growth and impacts for Nye, Clark, and Lincoln Counties. Small impacts to population, economic measures, housing, and public services.
Occupational safety and health	Total workers	63,000 to 67,000 (worker-years) over project life. About 1.8 to 2 fatalities from industrial accidents.	68,000 worker-years over the project life. About 2 fatalities from industrial accidents.	77,000 to 98,000 worker-years over project life. About 2.2 to 2.8 fatalities from industrial accidents.
	Radiologically exposed workers	Impacts to individual workers limited by regulatory and administrative dose limits. Potential impacts to worker population over project life would be 3.7 to 4.3 LCFs from radiation exposure.	Impacts to individual workers limited by regulatory and administrative dose limits. Potential impacts to worker population over project life would be 4.2 LCFs from radiation exposure.	Impacts to individual workers limited by regulatory and administrative dose limits. Potential impacts to worker population over project life would be 5.1 to 6.9 LCFs from radiation exposure.
Accidents	Consequences of most severe reasonably foreseeable (bounding) accident	Impacts of bounding facility accident would be 1.6×10^{-5} probability of LCF in individual, and 7.2×10^{-3} probability of LCF in exposed population.	Impacts of bounding facility accident would be 1.3×10^{-5} probability of LCF in individual, and 5.6×10^{-3} probability of LCF in exposed population.	Impacts of bounding facility accident would be a 1.3×10^{-5} probability of LCF in individual, and 5.6×10^{-3} probability of LCF in exposed population.
Noise	Sound levels	Impacts to public would be low due to large distances to publicly accessible areas. Workers exposed to elevated noise levels; controls and protection used as necessary.	Impacts to public would be low due to large distances to publicly accessible areas. Workers exposed to elevated noise levels; controls and protection used as necessary.	Impacts to public would be low due to large distances to publicly accessible areas. Workers exposed to elevated noise levels; controls and protection used as necessary.
Aesthetics	Visual impacts	Low adverse impacts to aesthetic or visual resources in region.	Low adverse impacts to aesthetic or visual resources in region.	Low adverse impacts to aesthetic or visual resources in region.
Utilities, energy, and materials	Electric power use	5,900 to 9,400 GWh over project life.	11,000 GWh over project life.	24,000 to 32,000 GWh over project life.
	Peak electrical demand	Peak demand of 41 MW. Enhanced electric power delivery system to site.	Peak demand of 47 MW. Enhanced electric power delivery system to site.	Peak demand of 47 to 57 MW. Enhanced electric power delivery system to site.
	Fossil fuel	300 to 390 million liters over project life. Small use in comparison to amounts available in region.	390 million liters over project life. Small use in comparison to amounts available in region.	420 to 620 million liters over project life. Small use in comparison to amounts available in region.
	Concrete	800,000 to 2,100,000 metric tons over project life. Small use in comparison to amounts available in region.	660,000 metric tons over project life. Small use in comparison to amounts available in region.	830,000 to 1,700,000 metric tons over life of project. Small use in comparison to amounts available in region.
	Steel	210,000 to 810,000 metric tons over project life. Small use in comparison to amounts available in region.	160,000 metric tons over project life. Small use in comparison to amounts available in region.	210,000 to 310,000 metric tons over project life. Small use in comparison to amounts available in region.

Table S-2. Environmental impacts associated with the S&ER flexible design[a] (page 3 of 3).

Environmental resource area	Primary impact indicator	Draft EIS scenarios	S&ER flexible design operating mode	
			Higher-temperature	Lower-temperature
Utilities, energy, and materials (continued)	Copper	0.2 to 1.0 thousand metric tons over project life. Small use in comparison to amounts available in region.	0.2 thousand metric tons over project life. Small use in comparison to amounts available in region.	0.3 to 0.5 thousand metric tons project life. Small use in comparison to amounts available in region.
Waste generation	Construction and demolition debris	150,000 m^3 over project life, requiring disposal in a new onsite landfill or as much as about 15% of NTS landfill capacity.	220,000 m^3 over project life, requiring disposal in a new onsite landfill or as much as 22% of NTS landfill capacity.	220,000 to 810,000 m^3 over project life, requiring disposal in a new onsite landfill or as much as 22 to 82% of NTS landfill capacity. Upper range could require capacity and service life expansion.
	Hazardous waste	7,700 m^3 over project life, small fraction of available disposal capacity.	8,400 m^3 over project life, small fraction of available disposal capacity.	8,400 to 15,000 m^3 over project life, small fraction of available disposal capacity.
	Sanitary and industrial solid waste	85,000 to 110,000 m^3 over project life, 19 to 24% of available NTS disposal capacity.	100,000 m^3 over project life, as much as 22% of available NTS disposal capacity.	110,000 to 190,000 m^3 over project life. 24 to 42% of NTS landfill capacity. Upper range could require capacity and service life expansion.
	Sanitary sewage	2,000 to 2,200 million liters, disposed of in onsite systems.	2,000 million liters, disposed of in onsite systems.	2,300 to 4,100 million liters, disposed of in onsite systems.
	Industrial wastewater	980 to 1,600 million liters, disposed of in onsite systems.	1,000 million liters, disposed of in onsite systems.	1,900 to 3,400 million liters, disposed of in onsite systems.
	Low-level radioactive waste	71,000 m^3 over project life, about 2.3% of available NTS disposal capacity.	71,000 m^3 over project life, about 2.3% of available NTS disposal capacity.	71,000 to 73,000 m^3 over project life, about 2.3 to 2.8% of available NTS disposal capacity.
Environmental justice	Disproportionate impacts	No disproportionately high or adverse impacts to minority or low-income populations. Opposing Native American viewpoint.	No disproportionately high or adverse impacts to minority or low-income populations. Opposing Native American viewpoint.	No disproportionately high or adverse impacts to minority or low-income populations. Opposing Native American viewpoint.
Transportation	Other materials	100 to 140 million km traveled for transporting other material resulting in 3 to 4 traffic fatalities.	100 million km traveled for transporting other material resulting in 3 traffic fatalities.	130 to 190 million km for transporting other material resulting in 4 to 6 traffic fatalities.
	Workers	360 to 450 million km traveled for workers resulting in 3.6 to 4.5 traffic fatalities.	470 million km traveled for workers resulting in 4.7 traffic fatalities.	540 to 680 million km traveled for workers resulting in 5.4 to 6.8 traffic fatalities.
Offsite manufacturing	Titanium	No use of titanium.	43,000 metric tons over project life. Annual use would be less than 8% of U.S. production capacity. Production capacity could be expanded.	43,000 to 60,000 metric tons over project life. Annual use would be less than 8% of U.S. production capacity. Production capacity could be expanded.
Long-term performance	10,000-year peak of the mean annual dose	Dose at 20 km 0.059 to 0.22 millirem.	No dose in the first 10,000 years.	No dose in the first 10,000 years.
	Peak of the mean annual dose (after 10,000 years)	Dose at 20 km 160 to 260 millirem.	Dose at 20 km about 120 millirem.	Dose at 20 km about 120 millirem.
	Time of peak occurrence	Peak of the mean annual dose 340,000 to 800,000 years after closure.	Peak of the mean annual dose 550,000 years after closure.	Peak of the mean annual dose 550,000 years after closure.

a. Abbreviations: GWh = gigawatt-hour; kg = kilograms; km^2 = square kilometers; LCF = latent cancer fatality; m^3 = cubic meter; MEI = maximally exposed individual; mg/m^3 = micrograms per cubic meter; MW = megawatt; NAAQS = National Ambient Air Quality Standards; NO_2 = nitrogen dioxide; NTS = Nevada Test Site; PM_{10} = particulate matter with an aerodynamic diameter of 10 micrometers or less.

1

Introduction

1. INTRODUCTION

1.1 Background

The U.S. Department of Energy (DOE, or the Department) issued the *Draft Environmental Impact Statement for a Geologic Repository for the Disposal of Spent Nuclear Fuel and High-Level Radioactive Waste at Yucca Mountain, Nye County, Nevada* (Draft EIS; DOE 1999, all), dated July 1999, in accordance with the National Environmental Policy Act of 1969, as amended (NEPA; 42 USC 4321 *et seq.*), and the Nuclear Waste Policy Act, as amended (42 USC 10101 *et seq.*). The Draft EIS describes the Proposed Action to construct, operate and monitor, and eventually close a repository at Yucca Mountain, and the potential environmental impacts of that action.

In December 1998 (before the publication of the Draft EIS), DOE published the *Viability Assessment of a Repository at Yucca Mountain* (Viability Assessment; DOE 1998a, all), as required in the 1997 Energy and Water Development Appropriations Act (Public Law 104-206, 110 Stat. 2984). The Viability Assessment provided information on the design of the proposed repository at that time, and stated that "DOE will continue to improve the repository design to provide extra margins of safety and will conduct additional research and testing to reduce remaining uncertainties" (DOE 1998a, Volume 1, p. 1-1). The Department began the evaluation of design options during the preparation of the Viability Assessment, as documented in the *License Application Design Selection Report* (CRWMS M&O 1999a, all). DOE completed this report in August 1999, after the publication of the Draft EIS. DOE selected a modified version of one of the five enhanced designs (Parker 1999, all) described in the *License Application Design Selection Report* for further design development.

In preparing the Draft EIS, DOE based the analysis on the Viability Assessment design (DOE 1998a, Volume 2), which represented the best available design information at the time. In the Draft EIS (DOE 1999, p. 2-6), DOE discussed its expectation that repository design features would continue to evolve. The evolution of the design is described in the *Yucca Mountain Science and Engineering Report: Technical Information Supporting Site Recommendation Consideration* (DOE 2001a, all), which summarizes technical information that the Secretary of Energy will use to determine whether to recommend approval of the Yucca Mountain site to the President for development as a repository.

This Supplement addresses the flexible design and operating modes presented in the Science and Engineering Report (DOE 2001a, all). This design (called the *S&ER flexible design*) reflects design enhancements and increased operational flexibility. The publication of this Supplement closely follows the publication of the Science and Engineering Report. Publishing these documents closely together assists in communicating the body of available design and environmental impact information before the completion of the Final EIS, and facilitates public review of comments on the S&ER flexible design. This Supplement refers the reader to specific parts of the Draft EIS, the Science and Engineering Report, and other documents for more information.

During the 45-day public comment period on this Supplement and in accordance with NEPA requirements, DOE will conduct one or more public hearings to receive oral and written comments on this Supplement. DOE will consider all comments postmarked within the comment period, and will consider comments received after the end of the comment period to the extent practicable.

1.2 Scope

DOE based the analytical scenarios in the Draft EIS (DOE 1999, Chapter 2) on the preliminary design in the Viability Assessment (DOE 1998a, all), focusing on the amount of spent nuclear fuel and its associated thermal output or load that DOE would emplace per unit area of the repository (called *areal mass*

loading). In the Draft EIS, DOE evaluated three thermal load scenarios including *high thermal load*, a relatively high emplacement density of commercial spent nuclear fuel [85 metric tons of heavy metal (MTHM) per acre], *intermediate thermal load* (60 MTHM per acre), and *low thermal load* (25 MTHM per acre). The analytical scenarios described in the Draft EIS were not intended to place a limit on the choices among alternative designs because DOE expected that the repository design would continue to evolve. Rather, DOE selected these scenarios to represent the range of foreseeable design features and operating modes and to ensure that it considered the associated range of potential environmental impacts.

REPOSITORY DESIGN TERMS USED IN THIS SUPPLEMENT

This Supplement evaluates the environmental impacts of the S&ER flexible design, which is the design focus of the *Yucca Mountain Science and Engineering Report: Technical Information Supporting Site Recommendation Consideration*. The evaluation includes the impacts covering a range from *lower-temperature* to *higher-temperature repository operating modes* (that embrace a range of operational parameters), as described primarily in Section 2.1.5.2 of the Science and Engineering Report. In this Supplement, the term *S&ER flexible design* refers to design features that are common to the range defined by the higher-temperature and lower-temperature repository operating modes. The differences between these modes deal with the highest postclosure temperatures of the waste package surface, the temperature of the emplacement drift rock walls, and the overall temperature of the repository rock. The term *Draft EIS design* refers to the repository design described in the Draft EIS; that is, the Viability Assessment design that could operate at a range of commercial spent nuclear fuel areal mass loadings, expressed as metric tons of heavy metal per acre, which define scenarios expressed as low, intermediate, and high thermal loads.

Since issuing the Draft EIS, DOE has continued to evaluate design features and operating modes that would reduce uncertainties in or improve long-term repository performance and improve operational safety and efficiency. The result of the design evolution process is the development of the S&ER flexible design, the potential impacts of which this Supplement evaluates. The S&ER flexible design incorporates certain design enhancements, but the basic elements of the Proposed Action to construct, operate and monitor, and eventually close a geologic repository at Yucca Mountain are unchanged.

In contrast to the focus of the Draft EIS on areal mass loading, the S&ER flexible design focuses on controlling the temperature of the rock between the drifts, and on the surfaces of the waste packages and the drift walls to meet thermal management goals established for possible repository operating modes. As a consequence, the designs differ with respect to some operating parameters. For example, the S&ER flexible design differs from the design evaluated in the Draft EIS with respect to the range of areal mass loading considered – 25 to 56 MTHM per acre versus 25 to 85 MTHM per acre, respectively. The S&ER flexible design would achieve its thermal management goals by varying other parameters, such as the *linear thermal load* (heat output per unit length of emplacement drift, expressed in terms of kilowatts per meter). In addition, the S&ER flexible design could emplace waste packages relatively closer together than the Draft EIS design, which did not consider linear thermal load. Under the S&ER flexible design, DOE could vary other operating parameters such as ventilation rates and the blending of hotter and cooler spent nuclear fuel in the same waste packages.

This Supplement focuses on aspects of the design that have changed since DOE issued the Draft EIS. It explains how the potential environmental impacts of the S&ER flexible design compare to those analyzed in the Draft EIS, and provides a context for understanding the potential impacts of the S&ER flexible design (see Chapter 3).

The design evolution evaluated in this Supplement resulted from new information, including an improved understanding of the interactions of potential repository features with the natural environment and the addition of design features for enhanced waste containment and isolation. Design features will continue to

evolve in response to additional site characterization information, technological developments, and interactions with oversight agencies.

In developing the S&ER flexible design, DOE considered the concerns expressed by the Nuclear Waste Technical Review Board about difficulties in reducing large uncertainties regarding waste package and repository performance related to high (above the boiling point of water) repository rock temperatures associated with the preliminary design in the Viability Assessment (Cohon 2000, all). The Board suggested that it might be possible to reduce such uncertainties by developing an adequate technical basis for a lower-temperature repository design.

The S&ER flexible design includes the ability to operate the repository in a range of operating modes that address higher and lower temperatures and associated humidity conditions. *Higher-temperature* means that at least a portion of the emplacement drift rock wall would have a maximum temperature above the boiling point of water at the elevation of the repository [96ºC (205ºF)]. The *lower-temperature* operating mode ranges include conditions under which the drift rock wall temperatures would be below the boiling point of water, and conditions under which the waste package surface temperatures would not exceed 85ºC (185ºF). To bound the impact analysis, DOE considered conditions under which the rock wall temperatures would be above the boiling point of water, and conditions under which waste package surface temperatures would not exceed 85ºC (see Section 2.2).

As with the thermal load analytical scenarios analyzed in the Draft EIS, the range of operating modes under the S&ER flexible design is representative of the range of foreseeable future design features and operating modes, and the conservative estimates of the associated potential environmental impacts in this Supplement encompass or bound the potential impacts of foreseeable future repository design evolution.

DOE will address all aspects of the Proposed Action, such as the transportation of spent nuclear fuel and high-level radioactive waste and the No-Action Alternative, in the Final EIS. Because the repository design has evolved from that considered in the Draft EIS, the Final EIS will evaluate only the S&ER flexible design, including the reasonable range of operating modes, and any enhancements to the flexible design developed as the result of ongoing analyses. DOE invites comments on its intention not to address the Draft EIS design in the Final EIS.

1.3 Document Organization and Contents

Chapter 2 describes the evolution of the design from that presented in the Draft EIS. It describes relevant aspects of the design evolution for the purpose of determining a basis for evaluating the environmental impacts in Chapter 3. In addition, Chapter 2 introduces and describes design concepts for two repository operating modes: higher-temperature and lower-temperature.

Chapter 3 provides an evaluation of how the potential impacts of the S&ER flexible design compare to the impacts analyzed in the Draft EIS.

Appendixes A, B, C, D, and E contain a list of references cited in this Supplement, a glossary of terms used in this Supplement, the list of Supplement preparers, a distribution list, and an index, respectively.

2

Design Evolution

2. DESIGN EVOLUTION

The design that the U.S. Department of Energy (DOE, or the Department) describes in the *Yucca Mountain Science and Engineering Report: Technical Information Supporting Site Recommendation Consideration* (DOE 2001a, all), which is referred to as the *S&ER flexible design,* is an evolution of the repository design analyzed in the *Draft Environmental Impact Statement for a Geologic Repository for the Disposal of Spent Nuclear Fuel and High-Level Radioactive Waste at Yucca Mountain, Nye County, Nevada* (Draft EIS; DOE 1999, all). The S&ER flexible design includes some of the possible design features described and evaluated in Appendix E of the Draft EIS. To provide an understanding of how DOE will address the S&ER flexible design in the Final EIS, this chapter:

- Presents the Proposed Action, incorporating the S&ER flexible design (Section 2.1).
- Explains the design and operational evolution that has led to the S&ER flexible design (Section 2.2).
- Describes the S&ER flexible design repository surface and subsurface facilities and operations, engineered barrier design, repository closure, and performance confirmation (Section 2.3).
- Presents aspects of the repository design and operating modes that could evolve further as a result of ongoing studies and analyses (Section 2.4).

2.1 Proposed Action

DOE proposes to construct, operate and monitor, and eventually close a geologic repository at Yucca Mountain for the disposal of spent nuclear fuel and high-level radioactive waste. In its simplest terms, the Draft EIS describes the proposed repository as "a large underground excavation with a network of *drifts* (tunnels)" that DOE would use for spent nuclear fuel and high-level radioactive waste emplacement (DOE 1999, p. 1-14). About 600 square kilometers (230 square miles or 150,000 acres) of land in Nye County, Nevada, could be permanently withdrawn from public access for repository use (DOE 1999, Section 3.1.1.3). The proposed location of the repository is shown in Figure 2-1. DOE would dispose of spent nuclear fuel and high-level radioactive waste in the repository using the inherent, natural geologic features of the mountain and engineered (manmade) barriers to help ensure the long-term isolation of the spent nuclear fuel and high-level radioactive waste from the human environment. DOE would build the repository emplacement drifts inside Yucca Mountain at least 200 meters (660 feet) below the surface and at least 160 meters (525 feet) above the present-day water table (CRWMS M&O 2000a, pp. 15 and 16). These basic elements of the Proposed Action have not changed from those presented in the Draft EIS.

DEFINITION OF METRIC TONS OF HEAVY METAL

Quantities of spent nuclear fuel are traditionally expressed in terms of *metric tons of heavy metal* (typically uranium), without the inclusion of other materials such as cladding (the tubes containing the fuel) and structural materials. A metric ton is 1,000 kilograms (1.1 tons or 2,200 pounds). Uranium and other metals in spent nuclear fuel (such as thorium and plutonium) are called *heavy metals* because they are extremely dense; that is, they have high weights per unit volume. One metric ton of heavy metal disposed of as spent nuclear fuel would fill a space approximately the size of a typical household refrigerator.

Under the Proposed Action, DOE would permanently place approximately 11,000 (CRWMS M&O 2000b, p. 14) to 17,000 waste packages containing no more than 70,000 metric tons of heavy metal (MTHM) (DOE 1999, p. 2-2) of spent nuclear fuel and high-level radioactive waste in a repository at Yucca Mountain. The number of waste packages now estimated to be needed to accommodate the material has a larger range than the 10,000-to-11,000-package design described in the Draft EIS (DOE 1999, p. 2-2) due to the potential use of smaller commercial spent

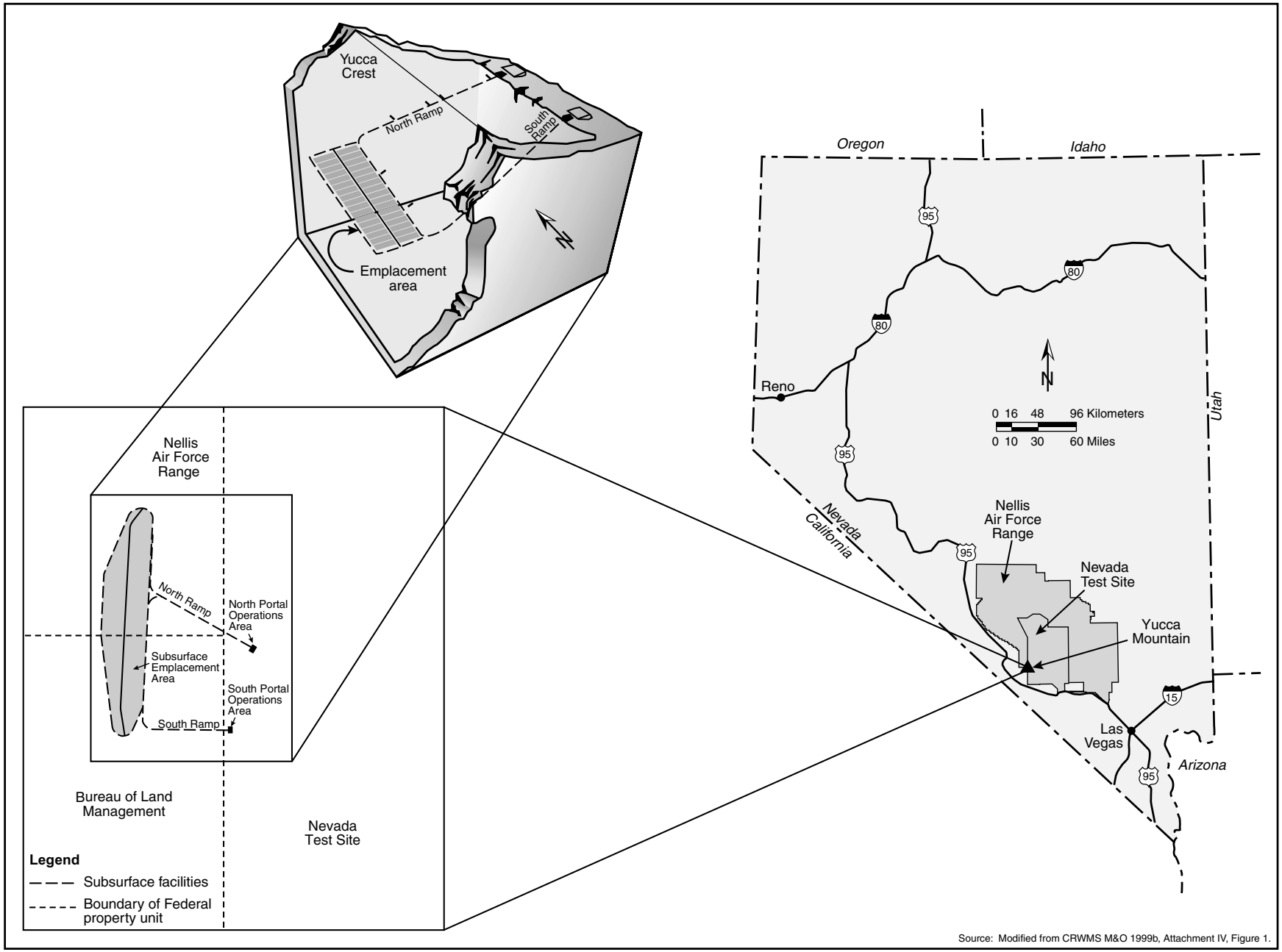

Source: Modified from CRWMS M&O 1999b, Attachment IV, Figure 1.

Figure 2-1. Diagram and location of the proposed repository at Yucca Mountain.

nuclear fuel waste package designs (to reduce the heat output per waste package) and to changes to the waste package designs for DOE spent nuclear fuel and high-level radioactive waste. The Draft EIS, especially Appendix A, contains additional information on the inventory and characteristics of spent nuclear fuel, high-level radioactive waste, and other materials that DOE could emplace in the proposed repository.

The Draft EIS included consideration of offsite manufacturing of the containers that DOE would use for the transport and disposal of spent nuclear fuel and high-level radioactive waste (DOE 1999, Section 4.1.15). This Supplement evaluates an additional action—offsite manufacturing of specialized titanium drip shields and corrosion-resistant emplacement pallets that DOE could install over and under the waste packages to improve performance and to reduce uncertainty regarding the 10,000-year performance of the repository.

2.2 Overview of Design Evolution

The Draft EIS evaluates the preliminary design concept described in the *Viability Assessment of a Repository at Yucca Mountain* (DOE 1998a, all) for repository surface facilities, subsurface facilities, and disposal containers (waste packages). It also evaluates the plans for the construction, operation and monitoring, and closure of the repository. DOE recognized before it published the Draft EIS that plans for a repository would continue to evolve during any development of a final repository design and as a result of any licensing review of the repository by the U.S. Nuclear Regulatory Commission. The design evolution evaluated in this Supplement resulted from new information, including an improved understanding of the interactions of potential repository features with the natural environment, the addition of design features for enhanced waste containment and isolation, and evolving regulatory requirements. The design will continue to evolve in response to additional site characterization information, technological developments, and interactions with oversight agencies.

For the reasons stated above, DOE developed analytical scenarios for the Draft EIS to estimate the range of environmental impacts that could result from the Proposed Action. These analytical scenarios included the low, intermediate, and high thermal loads. As the repository design has evolved since the issuance of the Draft EIS, so has the potential range of repository operations. Consistent with the Science and Engineering Report (DOE 2001a, all), DOE has redefined the range of repository operating modes to include higher-temperature and lower-temperature operating modes. This range of operating modes, which is defined in Section 2.2.2.2, provides the analytical basis DOE has used in the Supplement to estimate the range of environmental impacts that could result from the Proposed Action under a reasonable range of foreseeable operating modes for the S&ER flexible design. DOE has used these operating modes to analyze and describe the environmental impacts in this Supplement. So as not to underestimate the impacts that could result from future design evolution, this range of operating modes incorporates conservative assumptions. The Science and Engineering Report (DOE 2001a, all) discusses the continued design evolution and planned operational flexibility. Sections 2.2.1 and 2.2.2 of this Supplement discuss the design and operational evolution, respectively.

DOE has developed a set of underground design parameters to define a reasonable range of repository operating modes; these include the waste package thermal output, waste package spacing, and repository ventilation method and duration. The range of operating modes would result in postclosure repository temperatures that could vary from above the boiling point of water in the emplacement drift rock walls to an average waste package surface temperature below 85°C (185°F) (DOE 2001a, Section 2.1.5). Section 2.2.2 summarizes the operational parameters for the three thermal load scenarios analyzed in the Draft EIS and the two repository operating modes analyzed in this Supplement.

2.2.1 DESIGN EVOLUTION

As discussed in Section 1.1, DOE evaluated five enhanced designs in the *License Application Design Selection Report* (CRWMS M&O 1999a, all) and selected a modified version of Enhanced Design Alternative II to evaluate further (Parker 1999, all). The Science and Engineering Report (DOE 2001a, all) contains the details of the selection process. The S&ER flexible design incorporates operating parameters that would facilitate control of maximum emplacement drift wall temperature at a point above or below the boiling point of water or that would keep the average maximum surface temperatures of the waste packages below 85°C (185°F) (see Figure 2-2).

The S&ER flexible design includes the following modifications from the design evaluated in the Draft EIS:

- Expanded the capability of the Waste Handling Building to blend hotter and cooler commercial spent nuclear fuel assemblies to control the heat generation of the waste packages (Section 2.3.2.1)
- Added flexibility to include surface aging (or cooling) of hotter commercial spent nuclear fuel to control the heat of the waste packages (Section 2.3.2.1)
- Modified the subsurface design to enable a cooler repository, including increased ventilation (Sections 2.3.2.3 and 2.3.3.1)
- Added a solar power generating facility to reduce the need for power from off the site (Section 2.3.2.4.4)
- Revised emplacement drift layout to increase drift stability (Section 2.3.3)
- Increased spacing between emplacement drifts to allow a moisture pathway between the drifts (Section 2.3.3.1)
- Added operational flexibility to vary the spacing between waste packages in a drift to manage the heat load (Section 2.3.3.1)
- Added drip shields of corrosion-resistant titanium over the waste packages to divert moisture (Section 2.3.4.1)
- Refined the waste package to incorporate a more corrosion-resistant outer shell (Alloy-22) and structural stainless-steel inner shell to improve overall performance (Section 2.3.4.1)
- Modified ground support in emplacement drifts to reduce uncertainties associated with changes in water chemistry (replaced concrete liner with steel sets) (Section 2.3.4.2)
- Modified the invert, which includes the structures and materials that form a platform to support the pallet and waste package, to a steel structure with ballast (fill) (replaced the concrete invert due to the potential long-term impacts of concrete alkalinity) (Section 2.3.4.3)
- Replaced waste package pedestals (supports) with corrosion-resistant pallets (Alloy-22) to improve waste package handling and reduce the potential for corrosion between the waste package and the pallet (Section 2.3.4.3)

The purpose of these modifications is to improve the long-term performance, operational safety, and efficiency of the proposed repository, and to reduce the uncertainties related to high (above-boiling) repository host rock temperatures. Increased ventilation and flexibility in waste package spacing, along with controlling the thermal output of individual waste packages, are the key operational parameters that

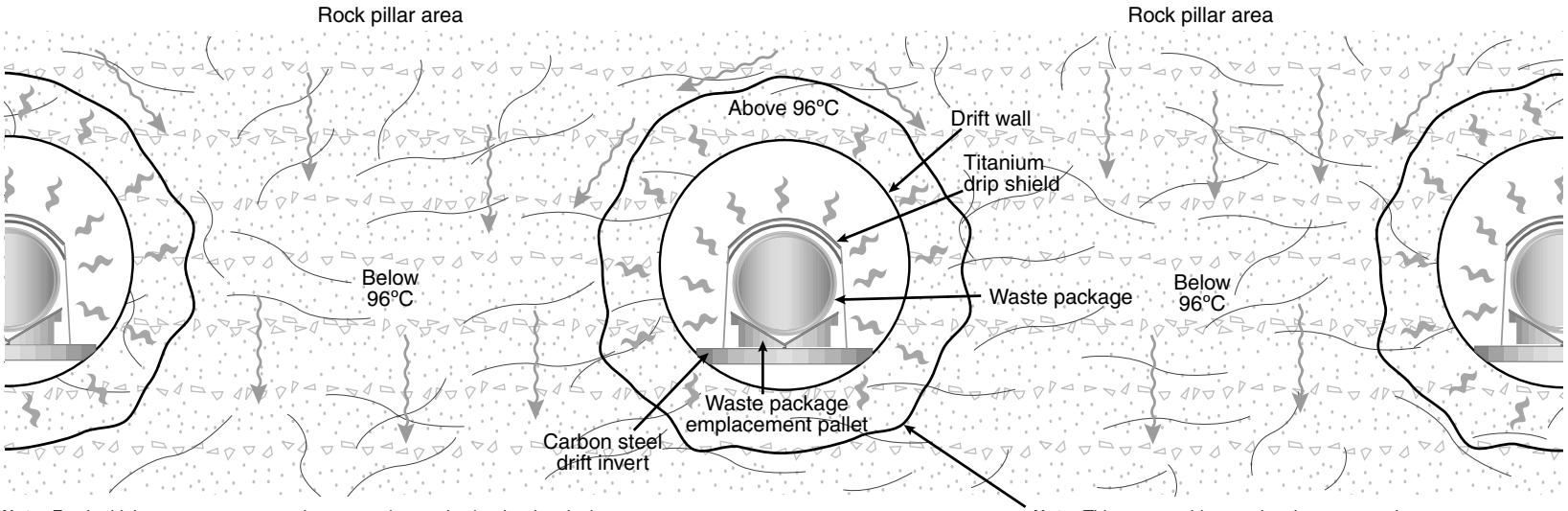

Note: For the higher-temperature repository operating mode, the drawing depicts a period of time after the repository was closed (no further ventilation) for as long as a few thousand years. After a few thousand years, when the waste package heat had decreased considerably, the above-boiling condition would no longer exist and the emplacement heat would be similar to that in the lower-temperature repository operating mode.

S&ER flexible design higher-temperature repository operating mode

Note: This area would expand and contract as the temperature rose and fell over time.

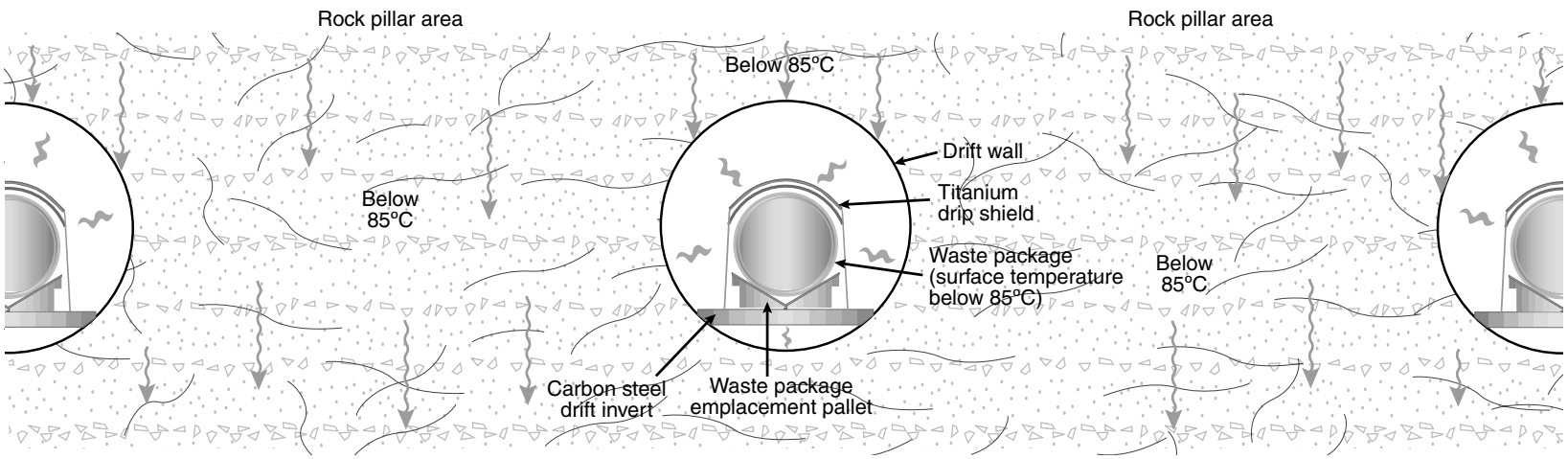

Legend

Water flow

Heat

Note: 96°C (205°F) is the boiling point of water at the elevation of the proposed repository.

S&ER flexible design lower-temperature repository operating mode

Drawing not to scale.

Source: Modified from DOE 2001a, Figures 2-71 and 4-38.

Figure 2-2. Artist's conception of water flow around emplacements for example higher- and lower-temperature repository operating modes of the S&ER flexible design.

DOE could vary to achieve the target thermal management goals for either the higher-temperature or lower-temperature repository operating mode criteria, as addressed in Section 2.2.2.

Table 2-1 summarizes key design and operational parameters that describe, in comparative fashion, each of the three analytical scenarios presented in the Draft EIS and the two repository operating modes developed to encompass operation of the S&ER flexible design. These analytical scenarios and operating modes provide the basis for evaluation of the environmental impacts described in Chapter 3.

Table 2-1. Summary of key underground design and operating parameters associated with thermal load scenarios and repository operating modes.

Parameter	Unit of measure	Draft EIS[a] thermal load scenarios			S&ER flexible design operating mode	
		Low	Intermediate	High	Higher-temperature[b]	Lower-temperature[c]
Variable parameter						
Areal mass load	MTHM[d] per acre	25	60	85	56	25 to 56
Linear thermal load	Kilowatts per meter	(e)	(e)	(e)	1.42	0.5 to 1.0
Drift spacing	Meters	38	40	28	81	81[f]
Waste package spacing	Meters	22	5	5	0.1	0.1 to 6.4[f]
Emplacement duration	Years	24	24	24	24	24 (50)[g]
Closure duration	Years	15	6	6	10	12 to 17
Preclosure ventilation duration[h]	Years	100	100	100	100	149 to 324
Ventilation rate (forced)	Cubic meters per second in drift	0.1	0.1	0.1	15	15
External ventilation shafts (emplacement and development)	Number	5	2	2	7	9 to 17
Dependent parameter						
Underground area	Square kilometers	10.0	4.25	3.0	4.7	6.5 to 10.1
Total excavated repository volume[i]	Millions of cubic meters	14.0	5.7	4.8	4.4	5.7 to 8.8
Waste packages	Number (in thousands)	10 to 11	10 to 11	10 to 11	11 to 12	11 to 17

a. Source: CRWMS M&O 1999c.
b. Source: CRWMS M&O 2000c.
c. Sources: McKenzie 2000; DOE 2001a.
d. MTHM = metric tons of heavy metal.
e. The Draft EIS design did not consider linear thermal load. Both waste package heat output and spacing were highly variable.
f. Drift spacing and waste package spacing determine various areal mass loads.
g. The lower-temperature repository operating mode analysis assumed that waste emplacement with commercial spent nuclear fuel aging would occur over a 50-year period ending in 2060.
h. From start of emplacement to start of repository closure.
i. Includes existing Exploratory Studies Facility volume of 0.42 million cubic meters.

2.2.2 OPERATIONAL EVOLUTION

Parameters associated with maximum repository temperatures are central to defining the operating modes of the S&ER flexible design. The heat generated by spent nuclear fuel and high-level radioactive waste (the thermal load) could affect both the short-term performance (prior to closure) and the long-term performance of the repository (that is, the ability of the engineered and natural barrier systems to isolate the emplaced waste from the human environment). The combination of the repository temperatures and relative humidity could affect the corrosion rate of the waste packages. In addition, the heat generated by the waste packages would transfer to the drift walls and surrounding rock, and could affect the geochemistry, hydrology, and mechanical stability of the emplacement drifts, which in turn would influence the flow of groundwater and the transport of radionuclides from the engineered and natural barrier systems to the environment. The repository temperature and relative humidity would depend on factors related to the design and operation of the repository including, but not limited to, the age of the

spent nuclear fuel at the time of emplacement, the spacing of the emplacement drifts and the waste packages in them, and the repository ventilation rate [forced-air or natural (passive) ventilation method]. These design and operational factors would affect the short-term environmental impacts of the repository.

2.2.2.1 Draft EIS Scenarios

The basis for the three analytical scenarios in the Draft EIS was the amount of commercial spent nuclear fuel that DOE would emplace per unit area of the repository (areal mass loading). The three thermal load scenarios presented in the Draft EIS include a relatively high emplacement density of commercial spent nuclear fuel (high thermal load–85 MTHM per acre), a relatively low emplacement density (low thermal load–25 MTHM per acre), and an emplacement density between the high and low thermal loads (intermediate thermal load–60 MTHM per acre) (DOE 1999, Section 2.1.1.2).

2.2.2.2 S&ER Flexible Design Operating Modes

In contrast to focusing on thermal loads, the S&ER flexible design focuses on controlling the temperature of the rock between the drifts, as well as the surface of the waste package and the drift walls. To accomplish this, the S&ER flexible design uses a linear thermal load (heat output per unit length of the emplacement drift) and emplaces waste packages relatively closer together than the Draft EIS design. Linear thermal load is expressed in terms of kilowatts per meter.

The flexible design discussed in the Science and Engineering Report includes the ability to operate the repository in a range of operating modes that address higher and lower temperatures and associated humidity conditions. *Higher-temperature* means that at least a portion of the emplacement drift rock wall would have a maximum temperature above the boiling point of water at the elevation of the repository [96ºC (205ºF)]. The *lower-temperature* operating mode ranges include conditions under which the drift rock wall temperatures would be below the boiling point of water, and conditions under which waste package surface temperatures would not exceed 85ºC (185ºF).

This Supplement presents the environmental impacts from the Proposed Action in terms of the range of operating modes from higher-temperature to lower-temperature under the S&ER flexible design. For purposes of comparison with this range of operating modes, the discussion in this Supplement refers to descriptions and impacts of the high, intermediate, and low thermal loads from the Draft EIS. DOE does not intend to present the impacts of these three thermal load scenarios in the Final EIS. The Final EIS will base its analysis on the range of operating modes from higher-temperature to lower-temperature of the S&ER flexible design, and on any further development in design and operating modes that could evolve as a result of ongoing studies and analyses.

2.2.2.2.1 *Higher-Temperature Repository Operating Mode*

The higher-temperature repository operating mode of the S&ER flexible design is an enhanced intermediate thermal load scenario at an areal mass loading of 56 MTHM per acre (DOE 2001a, Section 2.3.1.1) and a linear thermal load of 1.42 kilowatts per meter. The higher-temperature mode differs from the Draft EIS scenarios in that it calls for a greater forced-air ventilation rate—15 cubic meters (530 cubic feet) per second (DOE 2001a, Section 2.3.4.3) rather than 0.1 cubic meter (3.5 cubic feet) per second (DOE 2001a, Section 2.1.2.2). The waste packages would be closer [0.1 meter (DOE 2001a, Section 2.1.2.2) rather than 5 to 22 meters (0.33 foot rather than 16 to 72 feet)], and the emplacement drifts would be farther apart, 81 meters (266 feet) (DOE 2001a, Section 2.1.2.1) rather than 28, 38, or 40 meters (92, 125, or 130 feet) as described in the Draft EIS (DOE 1999, p. 2-32).

The higher-temperature repository operating mode thermal load goals would ensure that a portion of the rock between the drifts would have maximum temperatures below the boiling point of water [96°C

(205°F)] (DOE 2001a, Section 2.1.2) at the elevation of the emplacement horizon (see Figure 2-2, S&ER flexible design higher-temperature repository operating mode). This could allow any water mobilized by the higher-temperature conditions in the drifts to drain between the drifts. DOE envisioned that the development of a localized boiling region around each emplacement drift, rather than a single boiling region encompassing all the emplacement drifts, would ensure that very little water would be able to accumulate above any emplacement drift. This would substantially decrease the likelihood of water penetrating the emplacement drifts by means of fast paths such as fractures. The higher-temperature operating mode is based on this heat management criterion to keep boiling temperatures from spreading all the way through the rock between drifts after closure, while allowing repository closure as early as 50 years after the start of emplacement (DOE 1999, p. 2-13).

2.2.2.2.2 *Lower-Temperature Repository Operating Mode*

Under the S&ER flexible design, DOE could operate the repository in a lower-temperature mode by varying certain operational parameters. The lower-temperature operating mode ranges include conditions under which the drift rock wall temperatures would be below the boiling point of water, as well as conditions under which waste package surface temperatures would not exceed 85ºC (185ºF). To bound the impact analyses, DOE considered conditions under which the rock wall temperatures would be above the boiling point of water, and conditions under which waste package surface temperatures would not exceed 85ºC.

The primary variables governing a lower waste package surface temperature and the thermal response of the surrounding rock would be the heat generation rate of the waste packages, the linear spacing of the waste packages in the emplacement drifts, and the rate and duration of ventilation after waste package emplacement in the drifts. Operational parameters of the S&ER flexible design that DOE could use (independently or in combination) to control repository temperatures (waste package, drift wall, and the overall repository) include (1) varying the waste package loading to control the thermal output, (2) varying the duration of the preclosure ventilation period, and (3) varying the distances between waste packages in the emplacement drifts (DOE 2001a, Section 2.1.4). The operational parameters would work in combination to control the maximum waste package surface temperature and, thus, the heat radiated to the emplacement drift walls. DOE could use a combination of the three to maximize repository operational efficiency and achieve thermal objectives, as described below.

- **Waste Package Loading (including surface aging).** Commercial spent nuclear fuel would be the major contributor of heat in the repository. It would have a wide range of thermal outputs. The thermal output of the waste packages could, however, be reduced by varying waste package loading. Commercial spent nuclear fuel waste package loading could be varied by (1) placing low-heat-output (older) fuel with high-heat-output (younger) fuel in the same waste package (fuel blending), (2) limiting the number of spent nuclear fuel assemblies to less than the waste package design capacity (derating), (3) using smaller waste packages, or (4) placing younger fuel in a surface aging area to allow its heat output to dissipate so it could meet thermal goals for later emplacement. Section 2.3.2.1 describes the fuel blending process further. Reducing the thermal output of the waste package through any of these means would achieve lower waste package and drift wall temperatures. DOE would consider aging as much as 40,000 MTHM of commercial spent nuclear fuel (Mattsson 2000, p. 2) during a 50-year period. Aging would require an extended emplacement period.

- **Drift Ventilation Duration.** During repository operations, forced-air (active) or natural (passive) ventilation of the loaded drifts would remove an appreciable part of the heat generated by the waste packages. DOE could reduce the amount of heat delivered to, and thus the maximum

temperatures in, the host rock by extending the drift ventilation period with either active or passive ventilation. This alone, however, could require an extended ventilation period of as long as 300 years after final emplacement to ensure that postclosure temperatures (waste package surface and drift wall) remained below the specified goals (DOE 2001a, Section 2.1.5.2, Table 2-2).

- **Distance Between Waste Packages.** The distance between waste packages in emplacement drifts is another operational variable in the S&ER flexible design that DOE could use to manage the thermal response of the repository. With waste packages spaced farther apart, the linear thermal load in each drift would decrease, delivering less heat per unit volume of the host rock. Implementing an increase in average waste package spacing would require more emplacement drifts and potentially additional subsurface infrastructure than the S&ER flexible design higher-temperature repository operating mode. Under the lower-temperature repository operating mode, waste package spacing could be varied from 0.1 meter (0.33 foot) (DOE 2001a, Section 2.1.2.2) to 6.4 meters (21 feet) (McKenzie 2000, Option 1, p. 2).

These three operational parameters are interrelated; that is, they must work together to achieve the desired result. For example, a combination of 2-meter (6.6-foot) waste package spacing, surface aging of 40,000 MTHM commercial spent nuclear fuel, and 125 years of forced-air ventilation (from the start of emplacement) would be adequate to achieve the repository lower-temperature thermal objectives. Another example would be 2-meter waste package spacing, no surface aging, and 75 years of forced-air ventilation (from the start of emplacement) followed by 250 years of natural ventilation (DOE 2001a, Section 2.1.5.2, Table 2-2).

2.3 S&ER Flexible Design

2.3.1 OVERVIEW

The following paragraphs contain an overview of the sequence of repository construction, operation and monitoring, and closure. Figure 2-3 shows the potential timing for site characterization, site approval, site designation, licensing review, construction, operation and monitoring, and closure of the proposed repository at Yucca Mountain. If the Yucca Mountain site was approved for development as a repository, DOE would continue performance confirmation activities to support a License Application to the Nuclear Regulatory Commission after site approval and designation in accordance with the Nuclear Waste Policy Act, as amended (42 USC 10101 *et seq.*). Performance confirmation activities after Site Recommendation and before the construction of performance confirmation drifts would be similar to those performed during site characterization. These activities could require surface excavations and borings, subsurface excavations and borings, and in-place testing of rock characteristics.

The construction of repository facilities for the handling of spent nuclear fuel and high-level radioactive waste would begin after the receipt of construction authorization from the Nuclear Regulatory Commission. For the Draft EIS design and the S&ER flexible design, DOE assumed that construction would begin in 2005. The repository surface facilities, the main drifts, ventilation system, and initial emplacement drifts would be built in approximately 5 years, from 2005 to 2010 (DOE 2001a, Section 2.3.5.1.1).

Repository operations would begin after DOE received a license from the Nuclear Regulatory Commission to receive and possess spent nuclear fuel and high-level radioactive waste. For analytical purposes, DOE assumes that the receipt and emplacement of these materials would begin in 2010 and would occur over a 24-year period, except if DOE used aging to achieve the lower-temperature repository operating mode. With aging, the emplacement period would extend from 2010 until 2060. DOE also

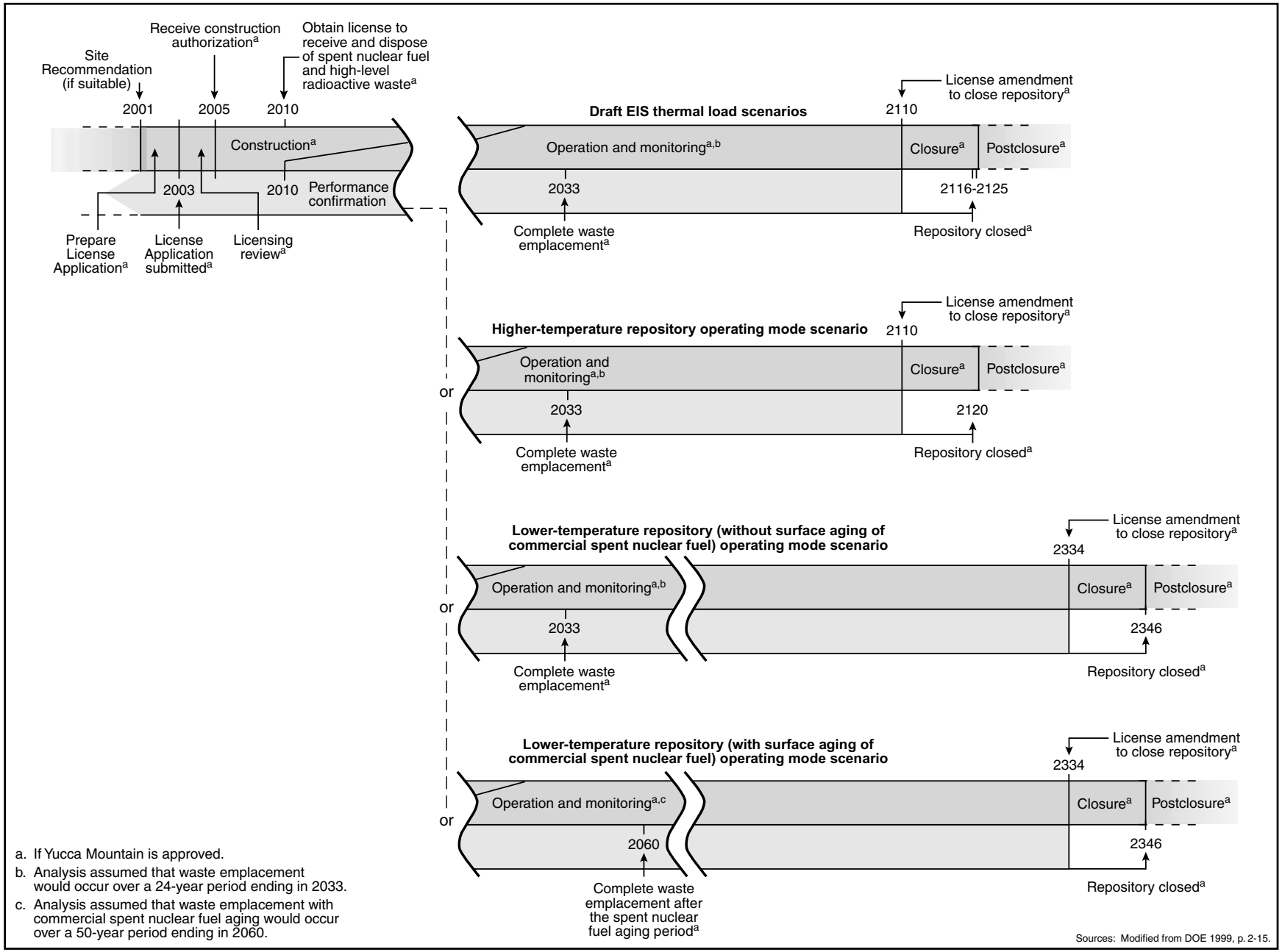

Figure 2-3. Monitored geologic repository milestones used for analysis.

assumes that material receipt would occur at a rate of approximately 3,000 MTHM per year (DOE 1999, p. 2-13). The emplacement rates discussed here are estimated for analytical purposes only, and would need to be refined should a repository be constructed.

The construction of emplacement drifts would continue during emplacement and would end in about 2032 (DOE 1999, p. 2-13), or at the end of aging in one potential case of the lower-temperature repository operating mode. As with the Draft EIS design, the S&ER flexible design would enable simultaneous construction and emplacement operations, and would physically separate activities on the construction or development side of the repository from activities on the emplacement side.

Monitoring and maintenance activities would start with the first emplacement of waste packages and would continue through repository closure. After the completion of emplacement, DOE would maintain those repository facilities, including the ventilation system and utilities (air, water, electric power) that would enable continued monitoring and inspection of the emplaced waste packages, continued investigations in support of estimates of long-term repository performance, and the retrieval of waste packages, if necessary. Immediately after the completion of emplacement, DOE would decontaminate and close the surface facilities that handled nuclear materials to eliminate any potential radioactive material release. However, DOE would maintain an area in the Waste Handling Building for the possible testing of waste packages as a quality assurance contingency in the performance confirmation program (DOE 1999, pp. 2-37 and 2-38). Future generations would decide whether to continue to maintain the repository in an open, monitored condition or to close it. To ensure flexibility to future decisionmakers, the Draft EIS reported that DOE was designing the repository with the capability for closure as early as 50 years or as late as 300 years after the start of emplacement (DOE 1999, p. 2-13). The Draft EIS and this Supplement (higher-temperature repository operating mode) assume that closure would begin 100 years after the start (76 years after the completion) of emplacement to facilitate comparisons. The lower-temperature repository operating mode could require a longer period of ventilation. Therefore, this Supplement evaluates closure of the repository in the lower-temperature mode after as many as 300 years of postemplacement ventilation, for a total ventilation period from the start of emplacement of 324 years.

The performance confirmation program would continue some of the activities initiated during site characterization through repository closure, including various types of tests, experiments, and analytical procedures. DOE would conduct performance confirmation activities to evaluate the accuracy and adequacy of the information it used to determine with reasonable assurance that the repository would meet the performance objectives after permanent closure (DOE 1999, p. 2-16).

Repository closure would occur after DOE received a license amendment from the Nuclear Regulatory Commission. For the Draft EIS analytical scenario, the period to accomplish closure would range from about 6 years for the high thermal load scenario to about 15 years for the low thermal load scenario (DOE 1999, p. 2-13). For the S&ER flexible design, closure would take about 10 years for the higher-temperature repository operating mode (CRWMS M&O 2000c, p. 6-22), and about 12 to 17 years for the lower-temperature repository operating mode. Closure of the repository facilities would include emplacing the drip shields, closing the subsurface facilities, decontaminating and decommissioning the surface facilities, reclaiming the disturbed surface areas, and establishing long-term institutional controls, including land records and warning systems to limit or prevent intentional or unintentional activity in and around the closed repository (DOE 1999, p. 2-13). DOE would establish a postclosure monitoring program, as required by Section 801(c) of the Energy Policy Act of 1992 (Public Law 102-486, 106 Stat. 2776); the Nuclear Regulatory Commission has proposed regulations (10 CFR Part 63; 64 *FR* 8640, February 22, 1999) addressing postclosure monitoring.

2.3.2 REPOSITORY SURFACE FACILITIES AND OPERATIONS

Surface facilities at the repository site would receive, prepare, and package spent nuclear fuel and high-level radioactive waste for subsurface emplacement. In addition, they would support the construction of the subsurface facilities. DOE would upgrade some surface facilities built for site characterization, but most would be new. Most facilities would be in three areas—the North Portal Operations Area, the South Portal Operations Area, and the Ventilation Shaft Operations Areas. Facilities to support waste emplacement would be concentrated near the North Portal, and facilities to support subsurface facility development would be concentrated near the South Portal. The following sections describe these areas in more detail. In addition, Section 2.3.2.4 describes the support facilities and utilities.

2.3.2.1 North Portal Operations Area

This area, shown in Figure 2-4, would be the largest of the primary operations areas, covering about 0.6 square kilometer (150 acres) (CRWMS M&O 1999b, Section 4.2.3.1) at the North Portal. It would include two areas: a Radiologically Controlled Area for receipt, handling, and packaging of spent nuclear fuel and high-level radioactive waste prior to emplacement, and a Balance of Plant Area for support services (such as administration, training, and maintenance). The Radiologically Controlled Area would be enclosed by a fence and monitored to ensure adequate safeguards and security for radioactive materials. The two principal facilities in the Radiologically Controlled Area would be the Carrier Preparation Building and the Waste Handling Building. Other support facilities in this area would include basic facilities for personnel support, warehousing, security, a concrete plant for fabricating and curing precast components and supplying concrete for in-place casting, and transportation (motor pool).

If DOE employed aging of commercial spent nuclear fuel in conjunction with the lower-temperature repository operating mode, it would use an area north and east of the North Portal Operations Area (see Figure 2-4) as the aging area. This area and access to it from the Waste Handling Building would be appropriately restricted for radiation control.

When a legal-weight truck or railcar (depending on the transportation mode) hauling a cask containing spent nuclear fuel or high-level radioactive waste arrived at the repository site, it would move through the security check into the Radiologically Controlled Area parking area or to the Carrier Preparation Building. Rail casks arriving on heavy-haul trucks would be handled in a similar manner. Operations in the Carrier Preparation Building would include performing inspections of the vehicle and cask, removing barriers from the vehicle that protected personnel during shipment, and removing impact limiters from the cask. The vehicle would then move to the Waste Handling Building for unloading or to a commercial spent nuclear fuel aging area, according to operations scheduling requirements (DOE 2001a, Section 2.2.2.1).

The Waste Handling Building would have one canister transfer line (reduced from two in the Draft EIS design, based on further waste stream requirements analysis) that would move the disposable spent nuclear fuel and high-level radioactive waste canisters through the building to prepare the waste for emplacement in the repository. It would also have two assembly transfer lines (reduced from three in the Draft EIS design, based on further waste stream requirements analysis) (DOE 2001a, Section 2.2.2.2). Each line would operate independently to handle waste throughput and support maintenance operations. The reduction of the number of transfer lines would not affect the ability of the Waste Handling Building to achieve its design throughput of 3,000 MTHM per year. The major design enhancement in the Waste Handling Building over the Draft EIS design is the addition of the commercial spent nuclear fuel blending capability, as shown in Figure 2-5 (see the assembly transfer system and spent nuclear fuel blending inventory pools).

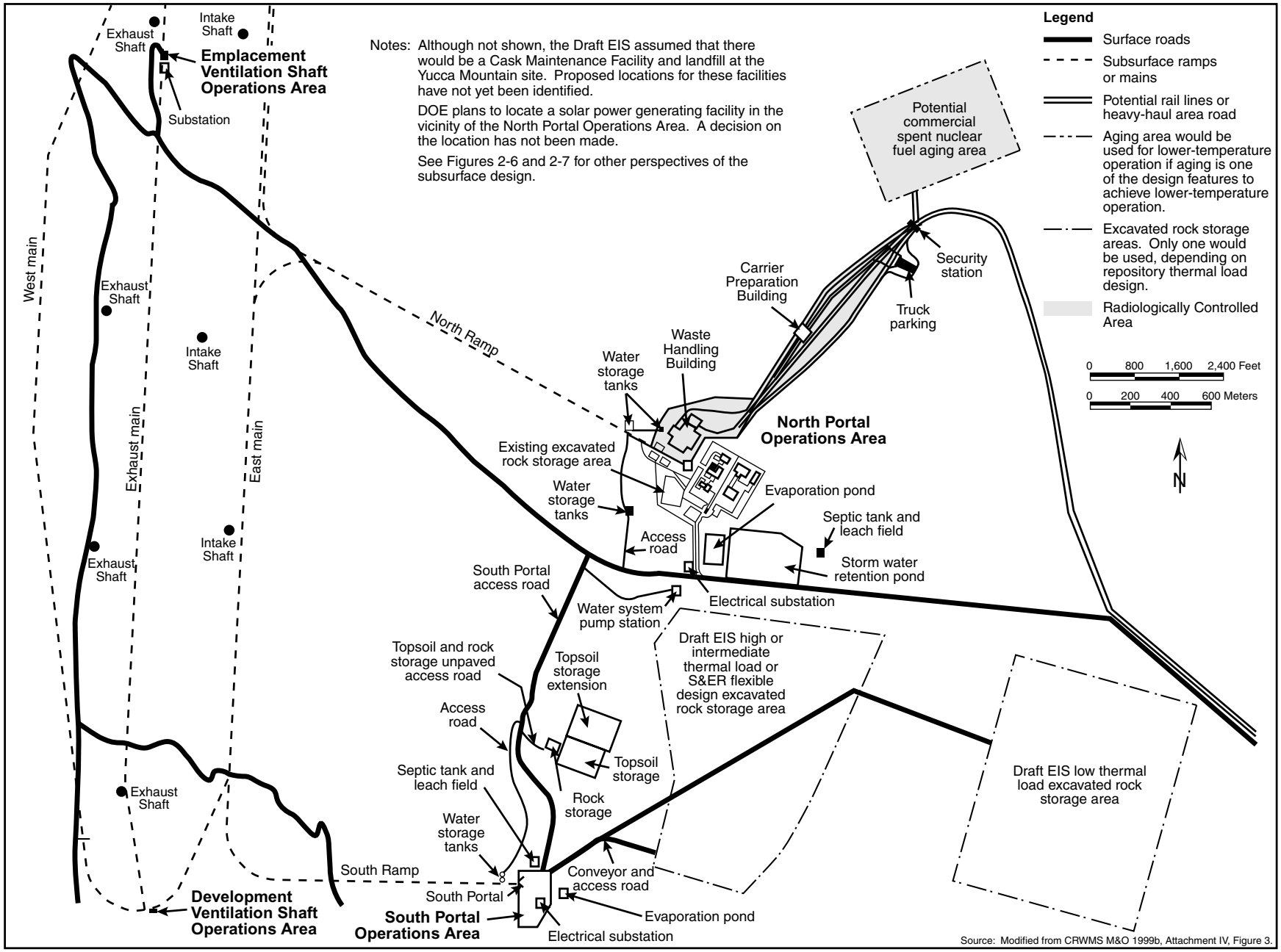

Figure 2-4. Potential repository surface facilities site plan.

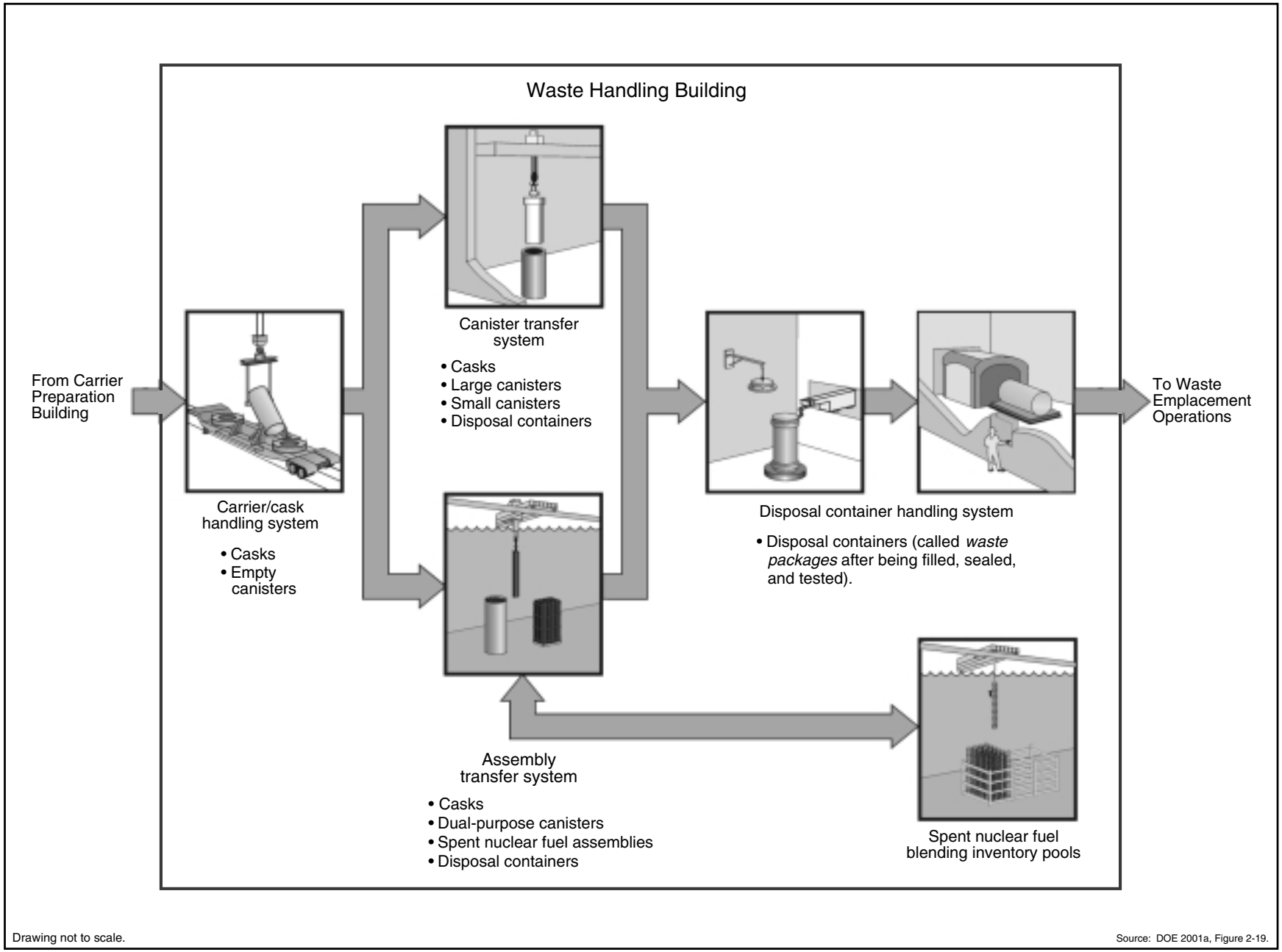

Figure 2-5. Key components of Waste Handling Building operations.

Waste Handling and Approach to Fuel Blending

Spent nuclear fuel and high-level radioactive waste arriving at the repository would be in solid form, but in a variety of types and sizes. Hence, the materials would arrive in a variety of transportation casks, all certified for use by the Nuclear Regulatory Commission. Once at the repository, these different sizes and shapes of waste would require disposal in waste packages of several designs and sizes (DOE 2001a, Section 3).

Commercial spent nuclear fuel would arrive as either individual fuel assemblies placed directly into transportation casks, or in dual-purpose canisters that would have to be opened to remove the fuel assemblies. DOE spent nuclear fuel and high-level radioactive waste would arrive in disposable canisters (that is, canisters that would not be opened, but would be transferred directly into a disposal container). Because of the variety of waste forms to be disposed of, a number of different designs for disposal containers (called waste packages after being loaded, sealed, and certified) would be needed (DOE 2001a, Section 2.2.1).

The radioactive decay process generates heat. The concentrations of particular isotopes would vary among the different waste forms, and among different fuel assembles in the same type of waste form, so different waste packages would generate different amounts of heat. Because the repository would have established temperature limits under the S&ER flexible design, DOE would establish a maximum heat output for all waste packages. For the higher-temperature repository operating mode, the maximum heat output would be 11.8 kilowatts (DOE 2001a, Section 2.2.1).

The limit on heat output from individual waste packages would impose special considerations for operations and costs. The DOE strategy for controlling heat output for the waste packages would be to load waste packages that intermix low-heat-output spent nuclear fuel with high-heat-output spent nuclear fuel to balance total waste package heat output. This process, called *fuel blending,* is an operational modification to the design evaluated in the Draft EIS (DOE 2001a, Section 2.2.1). The process applies only to commercial spent nuclear fuel, which generates much more heat than DOE spent nuclear fuel or high-level radioactive waste (DOE 1999, Appendix A).

To manage heat output, some fuel assemblies would be held in the fuel blending inventory until they generated less heat from radioactive decay or until additional low-heat-output fuel assemblies arrived for blending. The fuel assemblies would stay in inventory until they were selected for blending. The S&ER flexible design assumes a fuel blending inventory capacity of approximately 5,000 MTHM, or 12,000 spent nuclear fuel assemblies. By carefully planning and implementing a fuel-blending procedure, DOE could limit and optimize the heat output of the waste packages without increasing the number of waste packages (DOE 2001a, Section 2.2.1).

2.3.2.2 South Portal Operations Area

Under both the Draft EIS design and the S&ER flexible design, the South Portal Operations Area would cover about 0.15 square kilometer (37 acres) immediately adjacent to the South Portal of the subsurface facility (DOE 1999, p. 2-20).

The structures and equipment in this area, which would support the development of subsurface facilities, would include a concrete plant for fabricating and curing precast components and supplying concrete for in-place casting, steel warehousing, and basic facilities for personnel support, maintenance, warehousing, material staging, security, and transportation. From this area, overland conveyors would transport excavated rock from the repository to the excavated rock storage area (see Figure 2-4). Changes in the South Portal Operations Area from the Draft EIS design to the S&ER flexible design consist of a reduction in concrete batch plant size and additional steel warehousing for added emplacement drift ground support and steel inverts (CRWMS M&O 2000c, pp. 4-2 to 4-10).

2.3.2.3 Ventilation Shaft Operations Areas

The higher-temperature repository operating mode would require three emplacement intake shafts and one development intake shaft to support simultaneous development and emplacement activities (see Figure 2-6). Three exhaust shafts would support the full emplacement of 70,000 MTHM (DOE 1999, p. 2-2). The lower-temperature repository operating mode could require three to seven emplacement intake shafts, one development intake shaft, and five to nine exhaust shafts, depending on the repository layout (McKenzie 2000, Option 1, p. 3, and Option 2, p. 3). See Section 2.3.3.2 for more discussion of the overall ventilation of the repository and Table 2-1 for a comparative listing.

2.3.2.4 Support Facilities and Utilities

2.3.2.4.1 *Storage of Excavated Rock*

In both the Draft EIS design and the S&ER flexible design, repository support facilities and utilities would be on the surface in the general vicinity of the North and South Portal Operations Areas (see Figure 2-4). The storage area for excavated rock would be the largest support area. For the high or intermediate thermal load scenario, the excavated rock storage area would be between the North and South Portals, as shown in Figure 2-4, and would require about 1.0 and 1.2 square kilometers (250 and 300 acres), respectively (DOE 1999, p. 2-21). For the low thermal load scenario, the excavated rock storage area would be about 5 kilometers (3 miles) east of the South Portal Operations Area, as shown on Figure 2-4 (DOE 1999, p. 2-21). Because the excavated rock storage area would be higher at this location (local topography will support a higher rock pile in a smaller land area than in areas proposed for the high or intermediate thermal load scenarios), the area required would be about 1.1 square kilometers (270 acres) (DOE 1999, p. 2-21).

The excavated rock storage area for the S&ER flexible design higher-temperature repository operating mode would contain less material than any of the Draft EIS thermal load scenarios because the excavated volume would be smaller due to the close spacing [10-centimeter (4-inch)] intervals between the waste packages. The excavated rock storage area would actually decrease in size to 0.9 square kilometer (220 acres) under the higher-temperature mode (CRWMS M&O 2000c, Figure 6-1). The amount of excavated rock would increase under the lower-temperature repository operating mode (compared to the higher-temperature mode) as a result of increased waste package spacing. The excavated rock would be stored in the planned excavated rock storage area, which could be as large as 1.4 square kilometers (347 acres) (McKenzie 2000, Option 1, p. 24).

Table 2-1 lists the amount of excavated rock for each analytical scenario. For both the higher-temperature and lower-temperature repository operating modes, the volume of excavated rock would be substantially less than for the Draft EIS design low thermal load scenario.

2.3.2.4.2 *Wastewater and Stormwater Facilities*

The repository site would have two evaporation ponds for industrial wastewater, one at the North Portal and one at the South Portal. Sources of industrial wastewater that would go into these ponds include dust suppression water returned to the surface from tunnel boring operations, blowdown from cooling-tower operations at the North Portal, and water from concrete mixing and form cleanup at the South Portal. In both ponds, heavy plastic liners would prevent water migration into the soil. Under the Draft EIS design, the North Portal pond would cover about 0.024 square kilometer (6 acres). The evaporation pond at the South Portal would be about 0.0024 square kilometer (0.6 acre). The North Portal Operations Area would also include an approximately 0.13-square-kilometer (32-acre) stormwater retention pond to control stormwater runoff from the area (DOE 1999, p. 2-21).

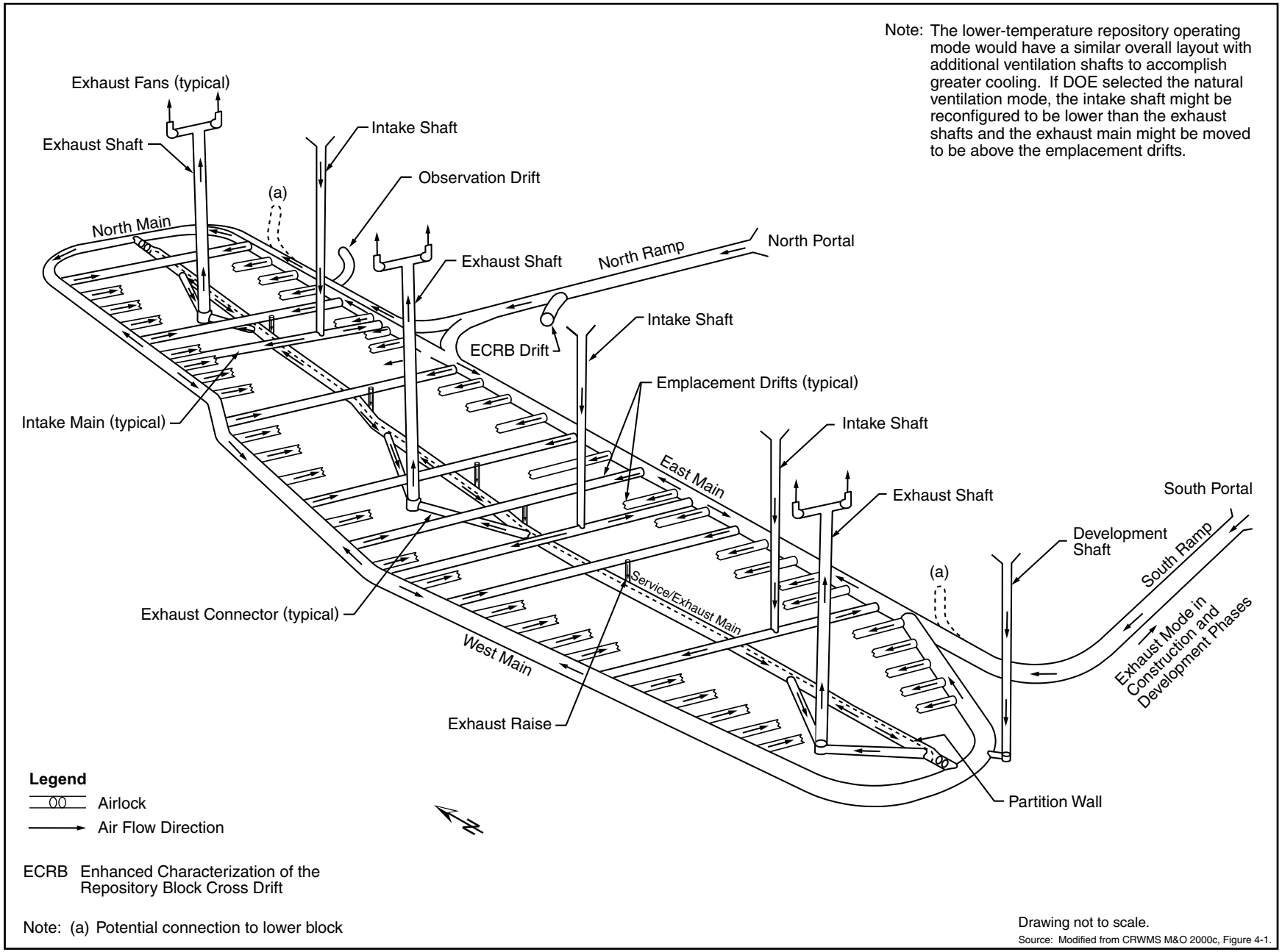

Figure 2-6. S&ER flexible design higher-temperature repository operating mode preclosure ventilation air flow in primary block.

Under the S&ER flexible design, annual discharges to the South Portal evaporation pond would generally be smaller than those estimated for the three thermal loads evaluated in the Draft EIS. This is because the S&ER flexible design would require less subsurface excavation. An exception to this generalization could occur under the lower-temperature repository operating mode. Under this mode and the case in which waste package spacing would be at its maximum, estimates of the annual discharges to the South Portal evaporation pond would be very similar to the lowest discharges identified in the Draft EIS. With respect to annual discharges to the North Portal evaporation pond, annual quantities would increase by roughly 10 percent for the S&ER flexible design in comparison to those identified in the Draft EIS. This would be due primarily to small increases in blowdown from the heating, ventilation, and air-conditioning system and in wastewater generated from the treatment of additional make-up water for the 5,000-MTHM spent nuclear fuel blending inventory pools.

2.3.2.4.3 *Solid Waste Disposal and Hazardous Waste Management*

The Draft EIS design and the S&ER flexible design would use the same solid and hazardous waste management approaches. DOE would package hazardous waste and ship it off the site for treatment and disposal (DOE 1999, p. 4-76). The Department would develop an appropriately sized landfill [approximately 0.036 square kilometer (9 acres) (DOE 1999, p. 2-23)] at the repository site for nonhazardous and nonradiological construction and sanitary solid waste and for similar waste generated during the operation and monitoring and closure phases. The South Portal Operations Area would have a septic tank and leach field for the disposal of sanitary sewage. The North Portal Operations Area has an existing septic system that would be adequate for use during repository operations.

2.3.2.4.4 *Electric Power*

The Draft EIS design and the S&ER flexible design would use the Nevada Test Site electric power distribution system, which would require upgrades to handle the demand for the various operational modes considered. At present, electric power at the Yucca Mountain site comes from that system. For the repository, electric power would be distributed throughout the surface and subsurface areas and to remote areas such as the Ventilation Shaft Operations Areas, construction areas, environmental monitoring stations, transportation lighting and safety systems, and water wells. To accommodate the expected electric power demand for the repository, DOE would upgrade existing electrical transmission and distribution systems. Backup equipment and uninterruptable electric power would ensure personnel safety and operations requiring electric power continuity. Diesel generators and associated switchgear would provide the backup power capability (DOE 1999, pp. 4-70 through 4-72).

In addition, DOE would use electricity from renewable energy sources at the repository (Griffith 2001, all). The S&ER flexible design includes a 3-megawatt solar power generating facility that DOE would use in conjunction with commercially available power to meet the requirements of the repository. This facility would require about 0.16 square kilometer (40 acres), plus land for an access road and transmission line (Griffith 2001, p. 1). The system would be constructed in phases of 500 kilowatts starting in 2005 (Griffith 2001, pp. 1 and 6). It would be connected to the repository electric power distribution system. A typical solar power generating facility consists of solar cells (photovoltaic arrays) and support facilities. The solar power generating facility would be located in the vicinity of the North Portal Operations Area. A decision on the location has not been made.

DOE is investigating another proposal for renewable energy—a 4.9-square-kilometer (1,200-acre) “wind farm” on the Nevada Test Site. As described in a recent draft environmental assessment (DOE 2001b), this private-sector enterprise would be the Nation’s second largest wind farm, with more than 500 wind turbines, each 55 meters (150 feet) tall. It would generate as much as 436 megawatts of electricity.

2.3.2.4.5 *Water Supply*

For both the Draft EIS design and the S&ER flexible design, DOE would continue to use existing wells about 5.6 kilometers (3.5 miles) southeast of the North Portal Operations Area to supply water for repository activities for all the various operating modes considered (DOE 1999, p. 2-23). These wells have supplied water for site characterization activities. DOE would seek the necessary authorization to continue withdrawing water from the wells for repository activities.

Water would be pumped to a booster pump station, then to storage tanks at the North and South Portal Operations Areas. These elevated tanks would provide gravity-fed water to the distribution systems. At both portal areas, water would go to potable and nonpotable water systems; the nonpotable systems would be primarily for fire protection.

2.3.2.4.6 *Fossil Fuel*

Under the Draft EIS design and the S&ER flexible design, fuel supply systems would include fuel oil for a central heating (hot water) plant, which would consist of an approximately 950,000-liter (250,000-gallon) main tank and an approximately 57,000-liter (15,000-gallon) day tank (DOE 1999, p. 2-23). In addition, there would be fuel supply systems for fire water system tank heaters, for diesel-powered standby generators and air compressors, and for backup fire pumps. There would also be diesel fuel and gasoline to fuel vehicles during the construction, operation and monitoring, and closure of the repository. In addition, fossil-fuel powered vehicles would maintain the excavated rock storage area.

2.3.3 REPOSITORY SUBSURFACE FACILITIES AND OPERATIONS

DOE would construct the subsurface facilities of the repository and emplace the waste packages above the water table in a mass of volcanic rock (referred to as the *repository block*) known as the Topopah Spring Formation, which consists of welded tuff (DOE 1999, p. 3-24). The specific area in this formation where DOE would build the repository emplacement drifts would satisfy several criteria: (1) to be in select portions of the Topopah Spring Formation that have desirable properties, (2) to avoid major faults for reasons related to both hydrology and seismic hazards (DOE 1999, pp. 3-25 through 3-29), (3) to be at least 200 meters (660 feet) below the surface (CRWMS M&O 2000a, pp. 15 and 16), and (4) to be at least 160 meters (525 feet) above the present-day water table (CRWMS M&O 2000a, pp. 15 and 16).

Figure 2-7 shows the repository footprints for the emplacement of spent nuclear fuel and high-level radioactive waste for the high, intermediate, and low thermal load scenarios of the Draft EIS, and the S&ER flexible design. The S&ER flexible design would use part or all of the layout shown in the lower right quadrant of Figure 2-7. The smallest area that DOE would use is the shaded area that corresponds to the possible higher-temperature repository operating mode. DOE would use the full area shown for some of the possible lower-temperature repository operating modes. [For more details see Section 2.1.5.1 of the Science and Engineering Report (DOE 2001a)]. The S&ER flexible design, in comparison to the high, intermediate, and low thermal load layouts, shows the reorientation of the emplacement drifts to increase drift stability. Figure 2-7 shows the difference in orientation between the S&ER flexible design layout and the Draft EIS layouts.

The higher-temperature repository operating mode would be in the upper block (primary), using 4.7 square kilometers (1,150 acres) (DOE 2001a, Section 2.3.1.1) (see Figure 2-7) and would require seven emplacement and development ventilation shafts. By comparison, in the Draft EIS design DOE would develop a high thermal load repository in the upper emplacement block, and would use 3 square kilometers (740 acres) (DOE 1999, p. 2-23), with two ventilation shafts to the surface, one on the emplacement side and one on the development side (see Figure 2-7). An intermediate thermal load repository would also be in the upper emplacement block, would have an area of 4.25 square kilometers

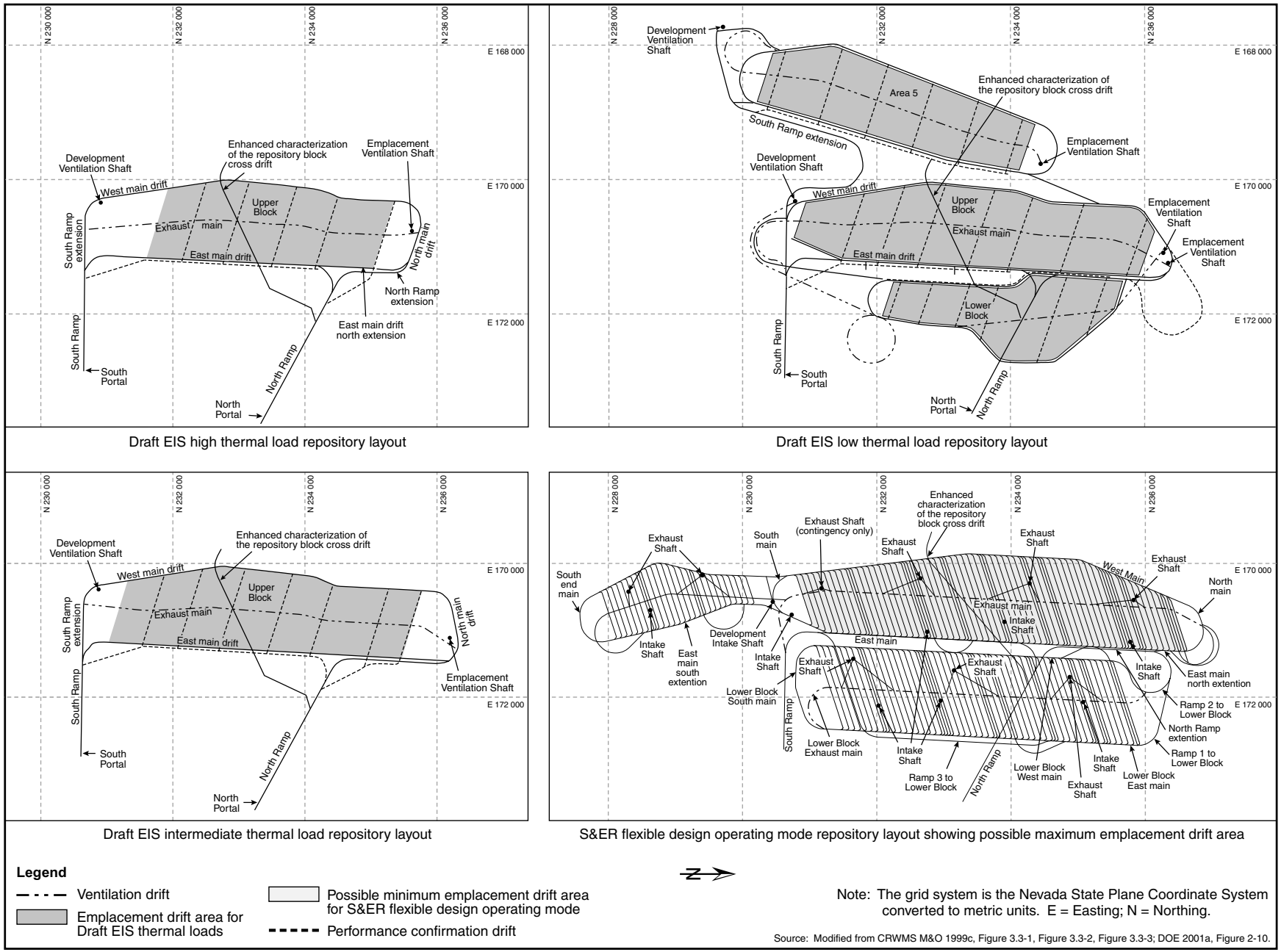

Figure 2-7. Proposed Action repository layouts for the Draft EIS high, intermediate, and low thermal load scenarios, and the S&ER flexible design operating mode.

(1,050 acres) (DOE 1999, p. 2-23), and would require two ventilation shafts to the surface (see Figure 2-7). A low thermal load repository would be in the upper and lower emplacement blocks and in Area 5, would use an area of approximately 10 square kilometers (2,500 acres) (DOE 1999, p. 2-23), and would require three emplacement and two development ventilation shafts (see Figure 2-7). The lower-temperature repository operating mode could require as many as 17 ventilation shafts and could use slightly more underground area than the Draft EIS low thermal load design (see Table 2-1).

2.3.3.1 Design and Construction

The primary differences between the Draft EIS design and the S&ER flexible design relate to thermal load (the maximum allowable amount of introduced heat per unit of subsurface emplacement area) and criteria for host rock temperature in the postclosure period. The increased spacing between emplacement drifts in the S&ER flexible design reflects these criteria. The S&ER flexible design requires an emplacement drift spacing of approximately 81 meters (266 feet) (DOE 2001a, Section 2.3.1.1). The emplacement drift spacing examined in the Draft EIS was 28, 38, or 40 meters (92, 125, or 130 feet) (DOE 1999, p. 2-32). For the higher-temperature repository operating mode, the spacing between commercial spent nuclear fuel waste packages would decrease from an average separation of approximately 5 to 22 meters (16 to 72 feet) in the Draft EIS design to a line-loading concept with waste packages placed approximately 10 centimeters (4 inches) apart (DOE 2001a, Section 2.3.1.1). The spacing between waste packages for the lower-temperature repository operating mode could increase from 10 centimeters (4 inches) to as much as 6.4 meters (21 feet) depending on the extent to which DOE used the other lower-temperature mode features (ventilation and aging).

The excavation processes for the S&ER flexible design would be the same as those presented in the Draft EIS (DOE 1999, p. 2-27).

2.3.3.2 Ventilation

Both the Draft EIS design and the S&ER flexible design use ventilation shafts to provide airflow to the subsurface during construction, emplacement, and performance monitoring. Both designs provide positive pressure ventilation flow for the construction and development of the repository and negative pressure ventilation flow in the emplacement drifts. Further, both designs include monitoring for radioactive contamination and preventive measures to achieve mitigation against their spread. The development side would be isolated from the emplacement side. Table 2-1 lists the number of ventilation shafts and flow rates for both designs.

The Draft EIS design included an emplacement drift ventilation rate of 0.1 cubic meter (3.5 cubic feet) per second after waste package emplacement (DOE 2001a, Section 2.1.2.2). This low ventilation rate would permit monitoring of the air stream exhausting from the drifts for leaks of radioactive material, but would not contribute significantly to removal of heat from the emplacement drifts. The S&ER flexible design would use an emplacement drift forced-air ventilation rate of 15 cubic meters (530 cubic feet) per second to control temperatures in the rock between emplacement drifts, at the drift wall, and at the waste package surface to meet thermal goals. In addition, the forced-air ventilation rate of 15 cubic meters per second could support the lower-temperature repository operating mode. The following paragraphs describe ventilation for the higher-temperature repository operating mode. Lower-temperature ventilation would operate in a similar manner.

Figure 2-6 shows the general airflow pattern for higher-temperature repository operating mode ventilation of the emplacement drifts, using a representative section of a fully developed repository. In the basic ventilation design, fresh air would enter through the surface ends of intake shafts and the ramps and would flow to the East and West Mains. From the mains, air would enter the emplacement, performance confirmation, or reserve drifts and flow to exhaust raises near the center of each drift. The exhaust raises

would direct the airflow down to the exhaust main, where it would continue to an exhaust shaft and then to the surface.

Fans at the surface ends of the exhaust shafts would provide the moving force for the subsurface repository airflow. The fans would have enough power to exhaust the maximum amount of air required during the emplacement, monitoring, and closure periods. The volume of air moved by the fans would be adjustable to meet cooling requirements as they varied over time. The surface fans would draw air through the exhaust mains at a rate that ensured that air would always flow into the emplacement drifts from the main drifts, never allowing air to recirculate back to the main drifts.

The S&ER flexible design under the higher-temperature operating mode would remove at least 70 percent of the heat generated by the waste inventory during the preclosure period (DOE 2001a, Section 2.1.2.2). The peak ventilation air temperature of 58°C (about 136°F) for a 1.4-kilowatt-per-meter linear thermal load would occur about 10 years into the preclosure period and decrease thereafter (CRWMS M&O 2000c, pp. 4-24 to 4-25). This temperature is lower than the exhaust air temperature of many other industrial processes, such as powerplants and manufacturing facilities. The peak ventilation air temperature under the lower-temperature operating mode would be lower than that described above.

Ventilation requirements for emplacement drifts would vary according to the activities conducted in those drifts. Prior to emplacement, ventilation would provide fresh air and control dust levels to provide an acceptable environment for construction personnel. During emplacement, ventilation would maintain drift temperatures within an acceptable range for equipment operation. After emplacement, ventilation would remove at least 70 percent of the heat generated by the waste packages.

While DOE was conducting concurrent development and emplacement operations, it would maintain two separate ventilation systems, one for each operational area. This separation would be accomplished by placing airlocks in the main drifts to ensure physical separation of the air space between the two areas. On the development side, the ventilation system would work under positive pressure, with air forced in through the development intake shaft or the South Ramp through a duct and exhausted through the South Ramp. On the emplacement side, the required ventilation facilities for the commissioned emplacement drifts would be available and operational in their final configuration; the ventilation system would work under negative pressure by drawing air out through the exhaust main (through the exhaust or “hot” side of the exhaust main), and from there through the exhaust shafts.

2.3.3.3 Waste Package Emplacement Operations

The Draft EIS design and the S&ER flexible design use the same basic method of emplacing the waste packages. The Draft EIS design transports only the waste package from the Waste Handling Building to the preconstructed concrete pedestal in the emplacement drift. The S&ER flexible design transports both the waste package and metal emplacement pallet as an integral unit from the Waste Handling Building to the prepared ground support in the emplacement drift. The Draft EIS contains a detailed description of the design waste emplacement process (DOE 1999, p. 2-23). The following paragraphs describe the emplacement process for the S&ER flexible design, which, as noted earlier, is the same as the Draft EIS design with the exception of the addition of the metal emplacement pallet.

For the S&ER flexible design, the transport of each waste package to the subsurface would start after the loading of a waste package and its emplacement pallet onto a bedplate (railcar) transporter in the Waste Handling Building and then into the shielded section of the transporter. The transporter would be coupled at its closed end to a manned primary electric-powered locomotive (trolley). A manned secondary electric-powered locomotive would be coupled to the transporter at the door end outside the Waste Handling Building (DOE 2001a, Section 2.3.4.4.1).

All waste packages would be transported underground through the North Ramp and into the emplacement area main drift. On arrival at the emplacement drift, the secondary locomotive would be uncoupled from the transporter, which would then be pushed into the emplacement drift turnout by the primary locomotive and stopped short of the isolation doors and loading dock. The operators would leave, and locomotive operation would be performed by remote control. The isolation doors would be opened remotely, as would the transporter doors. The primary locomotive would push, under remote control, the waste package transporter into the off-loading dock. The waste package and pallet, seated on the bedplate, would be rolled out of the transporter, under remote control, to stop on the transfer section of the railcar. The remote-controlled gantry would straddle the waste package and pallet, lift the waste package and pallet from the bedplate, and carry them to the designated location in the emplacement drift. The bedplate would be rolled back into the waste package transporter, the transporter doors closed, and the transporter railcar moved back to the access main drift using the primary locomotive under remote control. The isolation doors in the turnout would be closed, allowing the locomotive operators to recouple the secondary locomotive to the waste package railcar. The empty transporter would be returned to the Waste Handling Building to pick up the next waste package (DOE 2001a, Section 2.3.4.4.1).

2.3.4 ENGINEERED BARRIER DESIGN

The engineered barriers would include those components in the emplacement drifts that would contribute to waste containment and isolation. The S&ER flexible design includes the following components as engineered barriers: (1) waste package, (2) emplacement drift invert, (3) drip shield, and (4) to a lesser extent, ground support (DOE 2001a, Section 2.4). The following sections describe the details of design evolution in relation to these components.

2.3.4.1 Waste Package and Drip Shields

The function of the waste package would change over time. During the operation and monitoring phase, the waste packages would function as the vessels for safely handling, emplacing and, if necessary, retrieving their contents. After closure, the waste packages would be the primary engineered barrier to inhibit the release of radioactive material to the environment. Both the Draft EIS design and the S&ER flexible design of the waste package consist of two closed concentric cylinders in which DOE would place the waste forms.

The Draft EIS design included a corrosion-resistant Alloy-22 inner shell and a structurally strong carbon-steel outer shell (DOE 1999, p. 2-32). To increase the expected performance of the waste packages, the S&ER flexible design waste package would have a corrosion-resistant Alloy-22 shell with a thickness ranging from 2 to 2.5 centimeters (0.8 to 1 inch) on the outside and a stainless-steel (Type 316NG) inner shell with nominal thickness of 5 centimeters (2 inches) to provide structural support (DOE 2001a, Section 3). Alloy-22 consists mostly of nickel, chromium (up to 22.5 percent), and molybdenum (up to 14.5 percent). Type 316NG stainless steel consists mostly of iron, chromium (up to 18 percent), nickel (up to 14 percent), and molybdenum (up to 3 percent) (DOE 2001a, Section 3.4.1.1). In addition to the new shell design, the waste package would have a new top lid design that consisted of three lids. The innermost lid would be stainless steel, and would be sealed to the stainless-steel shell. The middle and outer lids would be Alloy-22, and would be sealed to the Alloy-22 outer shell (DOE 2001a, Section 3) (see Figure 2-8).

The highly corrosion-resistant outer material of the S&ER flexible design waste package would protect the underlying structural material from corrosive degradation, while the extremely strong internal structural material would support the thinner corrosion-resistant material. A titanium drip shield with a nominal thickness of 1.5 centimeters (0.6 inch) (also extremely corrosion resistant) would be placed over the waste package. With the drip shield and the Alloy-22 outer cylinder, there would be two diverse engineered corrosion barriers protecting the waste from contact with water. The use of two distinctly

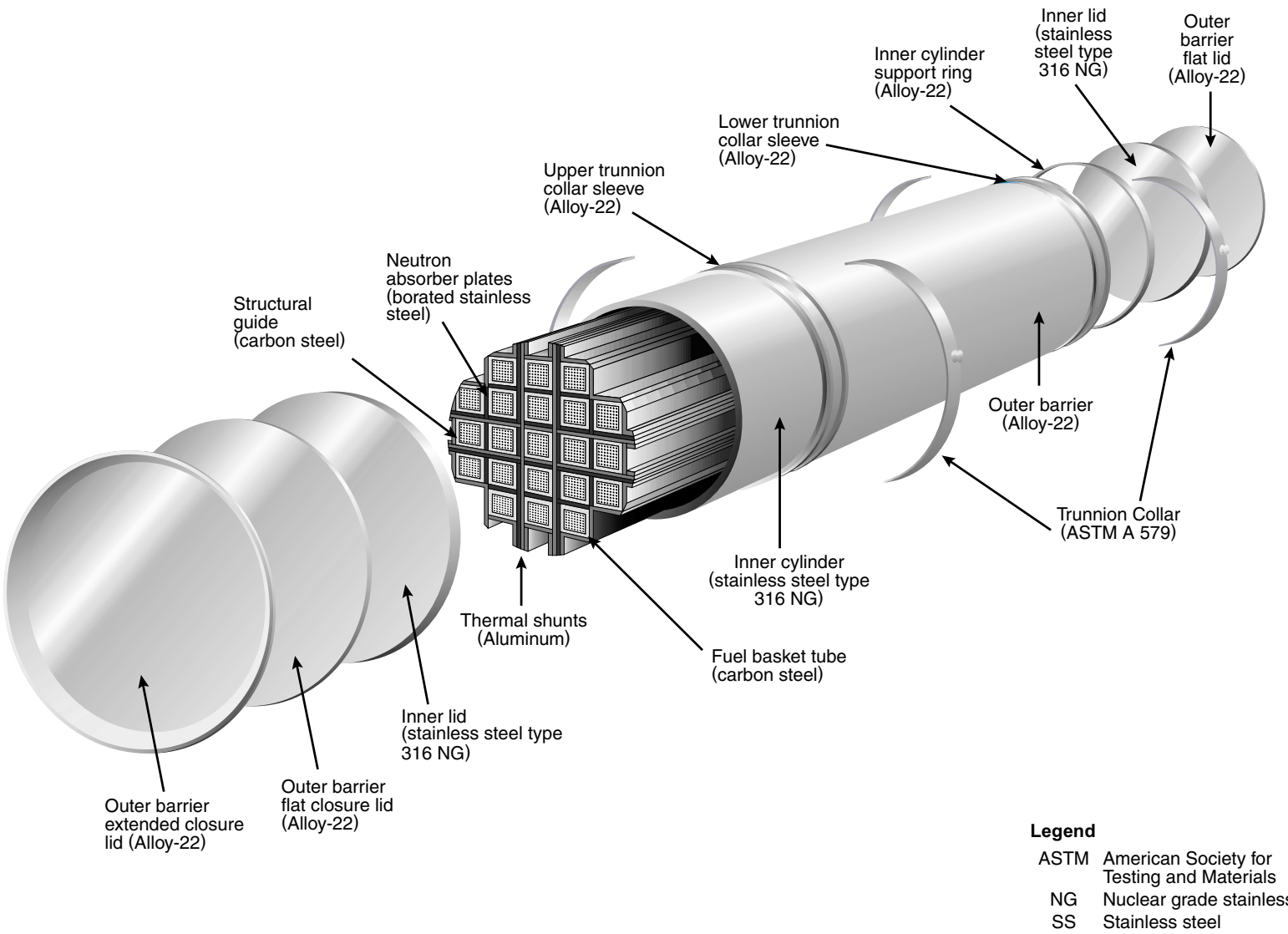

Figure 2-8. S&ER flexible design waste package for commercial spent nuclear fuel (pressurized-water reactor waste package).

different corrosion-resistant materials would reduce the probability that a single mechanism could cause the failure of both materials. Figure 2-9 shows a side view of a drip shield and an end view of the waste package and drip shield. With the changes described above, the S&ER flexible design waste package would have a longer performance life than the Draft EIS design waste package.

After the heat produced by the waste packages had dissipated (which would happen after closure), moisture could enter the emplacement drifts in liquid or vapor form. The function of the drip shields would be to divert water that dripped from the drift walls and water vapor that condensed on the surface of the drip shields away from waste packages, prolonging their longevity and structural integrity. Water dripping on the waste packages would increase the likelihood of corrosion. If the separation between the waste packages was greater than 1.6 meters (5.3 feet), then the drip shields would stand alone. If the separation was less than 1.6 meters, the drip shields would link together, forming a single continuous barrier for the entire length of the emplacement drift. They would be strong enough to protect the waste packages from damage by rockfalls resulting from degradation of the drift walls, withstanding damage from rocks weighing several tons (DOE 2001a, Section 2.4.4). To maintain waste package retrievability, the drip shields would be placed over the waste packages just before repository closure.

2.3.4.2 Ground Support Structures

In underground openings, ground support structures provide tunnel stability and help prevent rockfall. For the proposed repository, the ground support design addresses in-place loads, construction loads, potential loads from repository operations, and loads from potential seismic occurrences (DOE 2001a, Section 2.3.4.1.2).

In the S&ER flexible design, DOE modified the ground support system concept for emplacement drifts from precast concrete liners with a concrete invert as analyzed in the Draft EIS. Concerns about the long-term impact of concrete on the alkalinity of the drift environment and its implications on corrosion of engineered barrier and waste package components and, thereby, enhancement of radionuclide transport, motivated an enhancement in design for ground support in the emplacement drifts (DOE 2001a, Section 2.1.2.1). The ground support system for the S&ER flexible design would consist of steel sets with welded-wire fabric and fully grouted rockbolts.

The main drifts, turnouts, exhaust main, and ventilation shafts (nonemplacement areas) would have separate initial and final ground support systems. Initial ground support methods would vary depending on ground conditions, and would include a combination of steel sets, welded-wire fabric, rockbolts, and shotcrete (concrete sprayed onto the surface at high pressure). The final ground support system for these nonemplacement drift areas would be cast-in-place concrete liners.

The observation drifts, which would support the performance confirmation program, would have a ground support system similar to that for the emplacement drifts if they were excavated with a tunnel boring machine. Otherwise, they would have a combination of support systems, including steel sets, welded-wire fabric, rockbolts, and shotcrete, depending on ground conditions (DOE 2001a, Section 2.3.4.1.2.2).

2.3.4.3 Emplacement Pallets

In the S&ER flexible design DOE replaced the pedestals that would support the waste packages described in the Draft EIS with emplacement pallets. The waste packages would be placed horizontally on supports (emplacement pallets) in the Waste Handling Building and transported to the drifts as a unit. Figure 2-10 shows a conceptual design of spent nuclear fuel and high-level radioactive waste package types in an emplacement drift on the emplacement pallets, with drip shields and the steel sets for ground support.

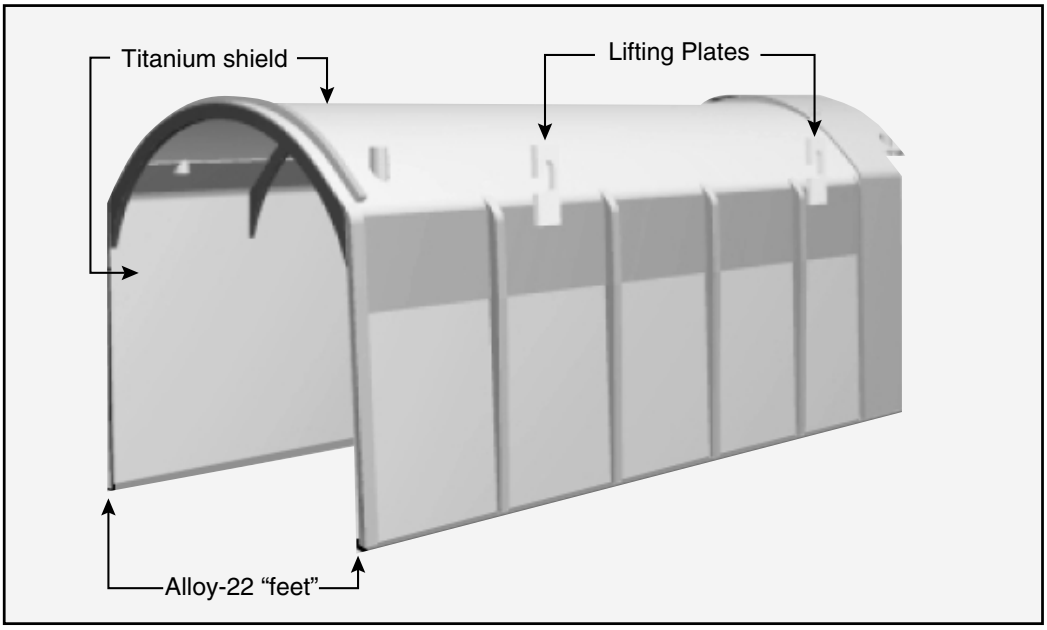

Drip shield

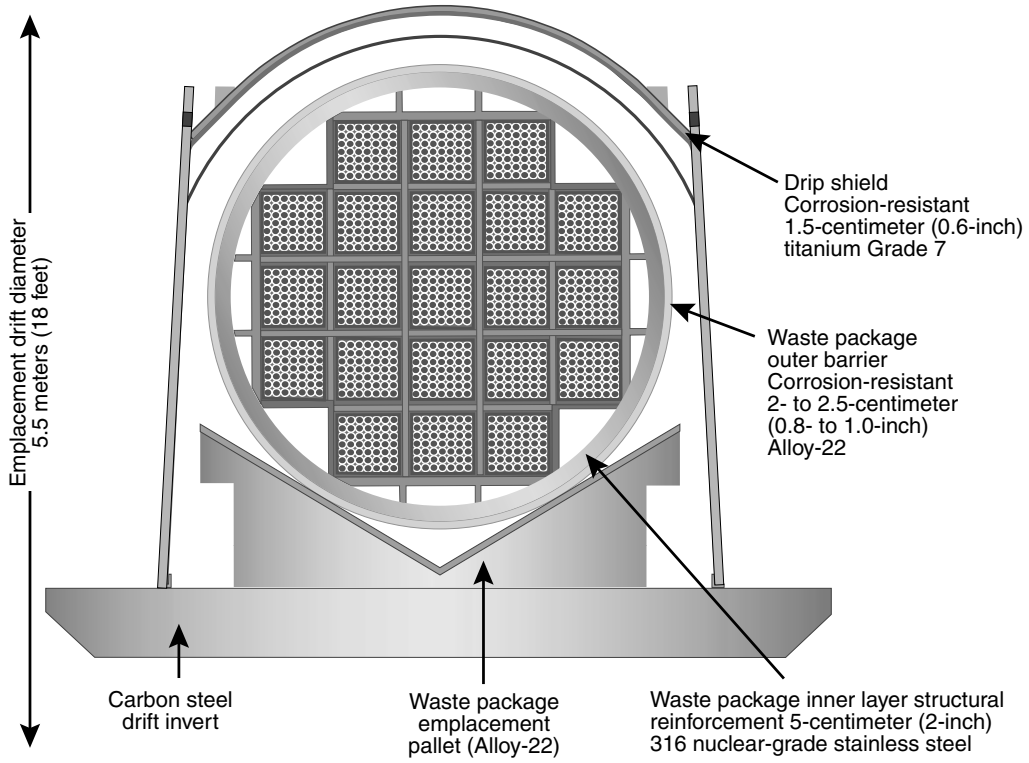

Drawing not to scale.

Source: Modified from DOE 2001a, Figures 2-73 and 3-1.

Figure 2-9. Drip shield and waste package containing commercial spent nuclear fuel with drip shields in place.

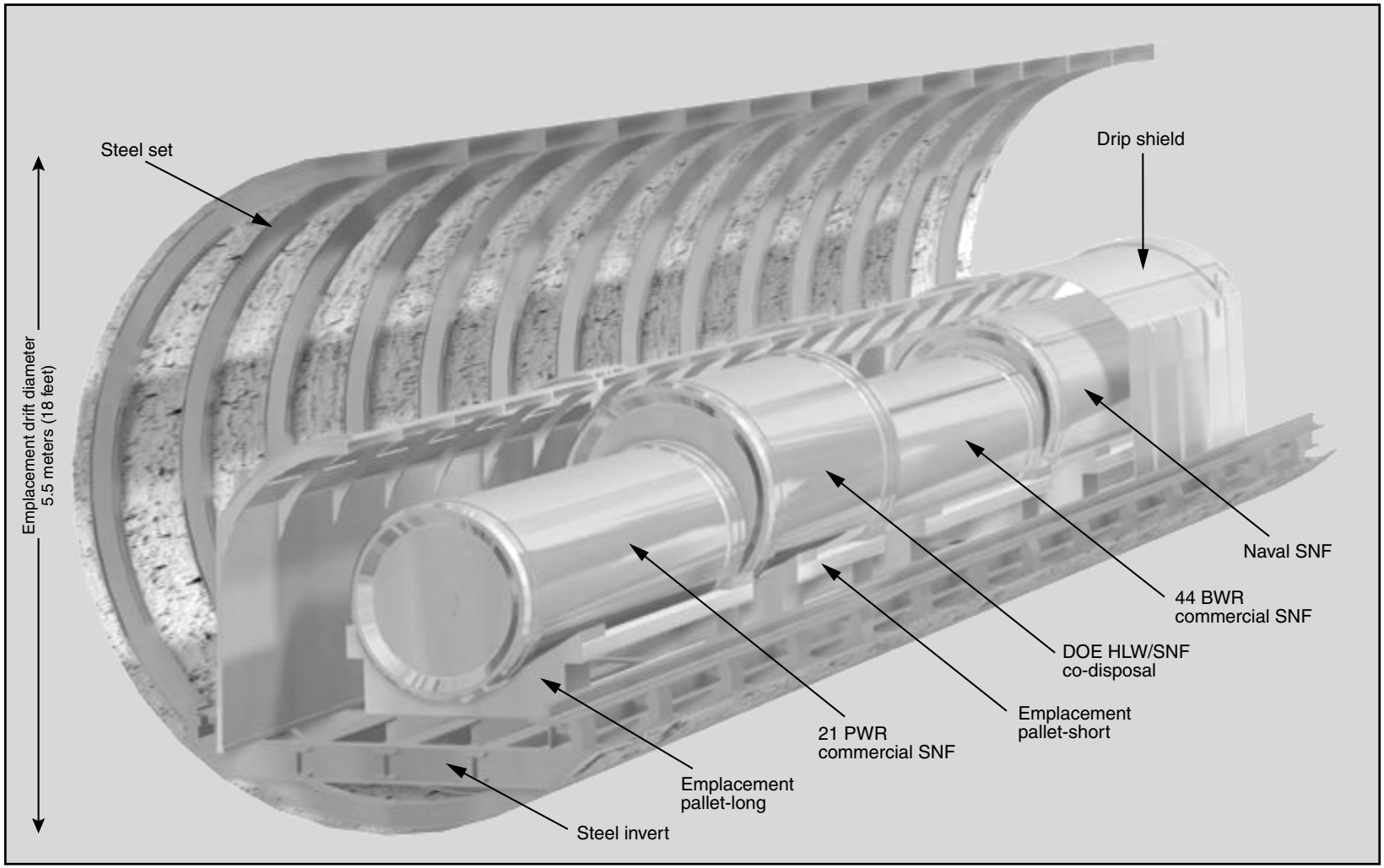

Legend

BWR Boiling-water reactor
DOE U.S. Department of Energy
HLW High-level radioactive waste
PWR Pressurized-water reactor
SNF Spent nuclear fuel

Drawing not to scale.

Source: Modified from DOE 2001a, Figure 2-77.

Figure 2-10. Typical section of emplacement drift with waste packages and drip shields in place.

The emplacement pallet would support the waste package in the drift. While loaded with a waste package, the pallet would be lifted by lifting points at the support, directly under the upper stainless-steel tubes, as shown in Figure 2-11. The pallet design would meet the design requirements for structural strength during lifting under the weight of the heaviest waste package (DOE 2001a, Section 2.3.4.4.2).

Figure 2-11 provides a view of the emplacement pallet, and Figure 2-12 shows a waste package on an emplacement pallet. There would be two sizes of pallets: one that would hold most of the waste packages and a second, shorter version used for the DOE codisposal waste package (see DOE 2001a, Section 2.3.4.4.2). The emplacement pallets would be made of Alloy-22 plates welded together to form the waste package supports. Two supports would be connected by square stainless-steel tubing to form the completed emplacement pallet. The supports would have a V-groove top surface to accept all waste package diameters. Emplacement pallet surfaces that contacted the waste package would be Alloy-22, the same material used for the outer package shell.

The ends of the waste package would extend past the ends of the emplacement pallet, which would allow placement of the waste packages end-to-end, within 10 centimeters (4 inches) of each other, without interference from the pallets (DOE 2001a, Section 2.3.4.4.2).

2.3.5 PERFORMANCE CONFIRMATION PROGRAM

Performance confirmation refers to the program of tests, experiments, and analyses that DOE would conduct to evaluate the accuracy and adequacy of the information used to determine with reasonable assurance that the repository would meet long-term performance objectives. Under the Draft EIS design and the S&ER flexible design, the performance confirmation program, which would continue through the licensing and construction phases and until the closure phase, would include elements of site testing, repository testing, repository subsurface support facilities construction, and waste package testing. Some of these activities would be a continuation of activities that began during site characterization.

To support performance confirmation activities, DOE would build some specialized surface and subsurface facilities. Under the S&ER flexible design, DOE would build observation drifts below and above the repository horizon (DOE 2001a, Section 2.5.2.2). The data-collection focus of the performance confirmation program would be to collect additional information to confirm the data used in the License Application. After the granting of a license, the activities would focus primarily on monitoring and data collection for preclosure performance parameters important to terms and conditions of the license.

DOE would use the performance confirmation program data to evaluate total system performance and to confirm predicted system response. If the data determined that actual conditions differed from those predicted, the results could support further evaluation of the actual conditions on the long-term performance of the repository system (DOE 2001a, Sections 2.5 and 4.6).

2.3.6 REPOSITORY CLOSURE

Before repository closure, an application to amend the license for closure must specifically provide an update of the assessment of the repository's performance for the period after closure, as well as a description of the program for postclosure monitoring to regulate or prevent activities that could impair the long-term isolation of waste. The postclosure monitoring program, as required by Section 801(c) of the Energy Policy Act of 1992 (Public Law 102-486, 106 Stat. 2776) and as proposed by the Nuclear Regulatory Commission [10 CFR Part 63 (64 *FR* 8640, February 22, 1999)], would include the monitoring activities that would be conducted around the repository after the facility had been closed and sealed. Proposed 10 CFR 63.51(a)(1) and (2) would require the submittal of a license amendment for closure of the repository (see Section 2.3.1). The details of this program would be defined during processing of the license amendment for closure. Deferring the definition of this program to the closure

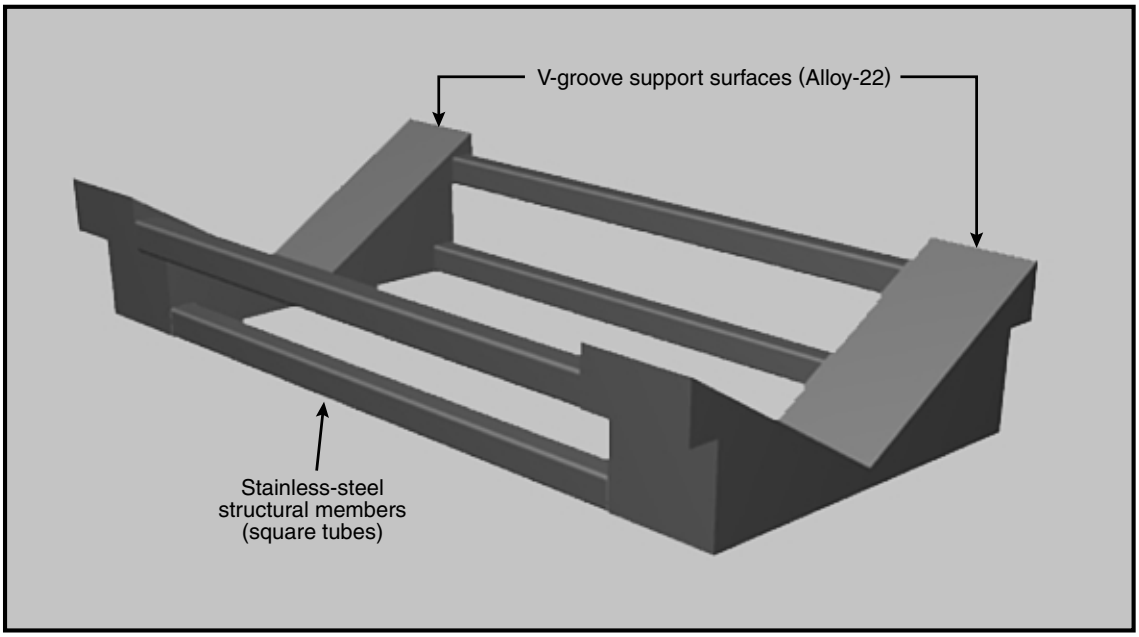

Drawing not to scale.

Source: DOE 2001a, Figure 2-51.

Figure 2-11. S&ER flexible design emplacement pallet.

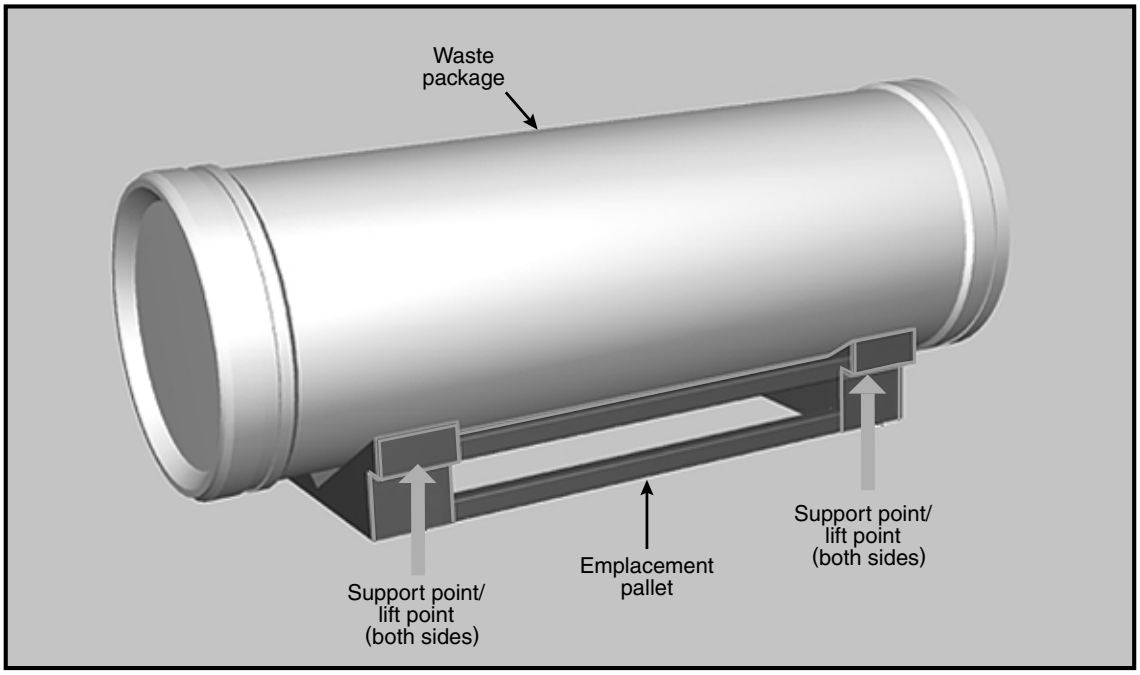

Drawing not to scale.

Source: DOE 2001a, Figure 2-52.

Figure 2-12. S&ER flexible design waste package on an emplacement pallet.

period would allow identification of appropriate technology, including technology that might not be currently available (DOE 2001a, Section 4.6.1).

As in the Draft EIS, repository closure for the higher-temperature repository operating mode would begin 100 years after the start of emplacement (76 years after the completion of emplacement) (DOE 1999, p. 2-37). In contrast, repository closure for the lower-temperature repository operating mode could begin 76 to 300 years after the completion of emplacement. The time to complete repository closure would vary from about 6 years for the Draft EIS high and intermediate thermal load scenarios to about 15 years for the low thermal load scenario (DOE 1999, p. 2-13). Repository closure for the higher-temperature mode would take 10 years (CRWMS M&O 2000c, p. 6-22). Repository closure for the lower-temperature mode would take between 12 and 17 years, depending on the waste package spacing.

Closure of the subsurface repository facilities would include the emplacement of the drip shields; removal and salvage of equipment and materials; filling of the main drifts, access ramps, and ventilation shafts; and sealing of openings, including ventilation shafts, access ramps, and boreholes. Filling would require surface operations to obtain fill material from the excavated rock storage area or other source, and processing (screening, crushing, and possibly washing) the material to obtain the required characteristics. Fill material would be transported on the surface in trucks and underground in open gondola railcars. A fill placement system would place the material in the underground main drifts and ramps. DOE would place the seals for shafts, ramps, and boreholes strategically to reduce radionuclide migration over extended periods, so these openings could not become pathways that could compromise the repository's postclosure performance. No backfill would be placed in the emplacement drifts.

Decommissioning surface facilities would include decontamination activities, if required, and facility dismantlement and removal. Equipment and materials would be salvaged, recycled, or reused, if possible. Site reclamation would include restoring the site to as near its preconstruction condition as practicable, including the recontouring of disturbed surface areas, surface backfill, soil buildup and reconditioning, site revegetation, site water course configuration, and erosion control, as appropriate.

2.4 Potential Future Design and Operational Evolution

Through successive evaluations and improvements, the repository design has advanced to the S&ER flexible design. This represents the current state of the ongoing process that identifies and develops ideas through conceptual, then preliminary, then more detailed designs to ultimately produce a design that DOE would use for purposes of the Secretary of Energy's determination of whether Yucca Mountain is suitable for the emplacement of radioactive waste. Coupled with feedback from ongoing scientific tests and investigations, the design process continues to provide insights into how to improve repository performance and reduce uncertainties in performance projections.

A key to the determination of site suitability is demonstrating whether a repository at Yucca Mountain would be likely to meet regulatory standards. Toward that end, scientific tests and studies identify and quantify uncertainties in performance assessment and confirm performance projections. Due to limitations in the understanding of natural processes that might occur over thousands of years, as well as the limits of being able to characterize the site fully, uncertainties in performance assessments can never be completely eliminated. DOE believes that the natural system and the robust S&ER flexible design would accommodate unquantified and residual uncertainties through performance margin (design and safety) and defense-in-depth. *Defense-in-depth* is a design approach that relies on a series of barriers, both natural and manmade, that would work in a complementary manner to minimize the amount of radioactive material that could eventually travel from the repository to the human environment.

CONTINUED EVOLUTION OF THE DESIGN PROCESS

Refining details of the design of the proposed repository is an ongoing and progressive process (see the *Yucca Mountain Science and Engineering Report: Technical Information Supporting Site Recommendation Consideration,* DOE 2001a, Section 2.1.2). As more information becomes available about the site, along with results from tests to evaluate the implementation of the design, DOE will continue to refine the S&ER flexible design. To increase the level of confidence in the understanding of long-term repository behavior, scientific tests would continue throughout the period of site characterization, as well as the periods before and during License Application (if the site is approved for development as a repository), construction authorization, repository operations, and performance monitoring. With the flexibility inherent in the S&ER design, periodic reviews of the results of the ongoing testing program and other design activities could prompt further design feature modifications.

As described in this chapter, DOE is considering a number of scenarios and operating modes, which are defined by key parameters that include the number of waste packages, spacing between waste packages, whether there would be surface aging, average linear thermal load, average maximum waste package temperature, emplacement period, emplacement area, length of emplacement and access drifts (as well as total excavated volume), drift spacing, and ventilation (forced-air and natural).

As an example of ongoing studies, DOE is examining the use of an extended period of natural ventilation of emplacement drifts after a period of forced-air ventilation. The heat generated by the spent nuclear fuel and high-level radioactive waste could develop and maintain a temperature difference to drive passive ventilation of the emplacement drifts throughout the maximum time the repository would remain open. The heat from the waste could be used to draw cooler, drier external air through the intake shafts, across the emplacement drifts, and out the exhaust shafts (located at an elevation above the intakes), much the way heat from a fireplace draws air from a room and exhausts it through a chimney. Passive ventilation is used to regulate air temperature in buildings and has analogs in large subsurface structures such as mines. Findings in numerous caves that are analogous to a deep geologic repository (DOE 2001a, Section 2.1.5.4) support the idea that the environment of a naturally ventilated underground system could, under certain conditions, preserve materials that are several thousand years old, thereby slowing waste package degradation. Optimizing the repository design to accommodate natural ventilation could result in a reconfigured supply and exhaust scheme, additional shafts, and air control devices for the drifts. Changes at the surface would include additional Ventilation Shaft Operations Areas associated with ventilation and exhaust shafts, as well as access roads to the additional shaft locations.

Drift spacing could be greater or smaller than that presented for the analytical scenarios, and could influence the size of the emplacement area and the length of emplacement and access drifts, as well as the total excavated underground volume. Drift spacing versus waste package spacing is a design trade-off to achieve lower heat output per unit volume of a repository. The effect of drift spacing on these related parameters would be less than the effect of waste package spacing in the analytical scenarios presented in this Supplement. Therefore, DOE did not perform a quantitative evaluation of the environmental impacts of variable drift spacing.

Uncertainties in future funding profiles or the order of spent nuclear fuel or high-level radioactive waste shipments could result in development of the repository in a sequential or modular manner (that is, constructing the surface and subsurface facilities in portions, or “modules”). This approach would facilitate the ability to incorporate “lessons learned” from initial work into subsequent modules, reduce initial construction costs and investment risk, and potentially increase confidence in meeting the schedule for waste receipt and emplacement. The primary implication of such an approach would be to distribute repository construction costs and environmental impacts more evenly over time. Potential environmental considerations could include a slightly larger Waste Handling Building and Radiologically Controlled Area, with a minor impact on operational activities.

3

Evaluation of Impacts

3. EVALUATION OF IMPACTS

Chapter 2 discusses repository design evolution and different repository operating modes. This chapter presents the results of the evaluation the U.S. Department of Energy (DOE, or the Department) conducted to estimate the environmental impacts in comparison to those described in Chapter 4 of the *Draft Environmental Impact Statement for a Geologic Repository for the Disposal of Spent Nuclear Fuel and High-Level Radioactive Waste at Yucca Mountain, Nye County, Nevada* (DOE 1999). Chapter 4 of the Draft EIS describes short-term (before closure) impacts of the proposed repository on 13 environmental resource areas (land use, air quality, etc.). This Supplement to the Draft EIS discusses the same areas plus transportation of nonradioactive materials, offsite manufacturing, and long-term repository performance associated with the S&ER flexible design (see Chapters 6, 4, and 5 of the Draft EIS, respectively).

As part of its evaluation, DOE selected primary impact indicators in each environmental resource area and in several other areas. *Primary impact indicators* are the most important contributors or parameters used to determine the specific impacts in an environmental resource area. They are directly proportional to the specific impact, and are generally determined during an intermediate step in the impact calculation or evaluation. In some environmental resource areas—for example, those that looked at highest annual impacts—DOE selected primary impact indicators to limit evaluation to a single project phase, the phase that would result in the highest impacts. This focus on situations that could result in the highest possible impacts enables a more concise presentation of the potential impacts. The Department used the ratio of primary impact indicators to specific impacts in the Draft EIS to determine the Supplement impact estimates. Tables in the following sections list the various primary impact indicators and their values for the Draft EIS thermal load scenarios and the S&ER flexible design. The text of these sections presents estimates of specific impacts. The use of primary impact indicators enables a comparison between the impacts of the S&ER flexible design and those presented in the Draft EIS. Table 3-1 lists primary impact indicators. In general, values for the thermal load scenarios are from Chapter 4 of the Draft EIS (DOE 1999) or from the supporting appendixes.

PRIMARY IMPACT INDICATORS

Primary impact indicators are the most important contributors or parameters used to determine the impacts in a particular environmental resource area. By determining a value for a primary impact indicator in a new or developing case—the S&ER flexible design—and comparing it to the same indicator in a completed environmental analysis case—a thermal load scenario from the Draft EIS—DOE can estimate the potential environmental impacts of the new case.

DOE used primary impact indicators in this Supplement to focus on environmental resource areas that under the S&ER flexible design would most likely be affected by evolution of the thermal load scenarios evaluated in the Draft EIS. This Supplement mainly discusses indicators resulting from design enhancements, and includes estimates of changes to their associated environmental impacts.

As discussed in Chapter 2, the lower-temperature repository operating mode would enable the achievement of the target thermal management goals by varying the three primary operational parameters. Section 2.2.2.2.2 provides the ranges being considered for each of these parameters. Operation of the repository within the ranges of these parameters, considering their interrelationships, would achieve the lower-temperature mode. Section 2.1.5.2 of the *Yucca Mountain Science and Engineering Report: Technical Information Supporting Site Recommendation Consideration* (DOE 2001a) provides a set of sample operating scenarios, each of which would be low temperature, that exhibit the inherent design flexibility. To evaluate the environmental impacts of the lower-temperature mode, DOE maximized each of the three primary operational parameters in turn, while assigning the remaining two parameters with

Table 3-1. Primary impact indicators for the Draft EIS design and the S&ER flexible design.[a]

Primary impact indicators[b]	Draft EIS thermal load scenario[c]			S&ER flexible design operating mode	
	High	Intermediate	Low	Higher-temperature	Lower-temperature
Short-term environmental resource areas					
Air quality					
Radon release (curies)	110,000	130,000	340,000	170,000	390,000 to 800,000
Particulate matter (kilograms/year) (construction phase)	170,000	180,000	170,000	220,000	250,000 to 380,000
Gaseous pollutants (nitrogen dioxide, kilograms/year) (operations and monitoring phase)	130,000	130,000	230,000	87,000	88,000 to 96,000
Hydrology					
Water use (acre-feet/year) operations and monitoring phase	250	260	480	230	240 to 360
Total disturbed area (square kilometers)	3.3	3.5	3.5	4.3	4.9 to 8.1
Biological and cultural resources					
Newly disturbed area (square kilometers)	1.8	2.0	2.0	2.8	3.4 to 6.6
Socioeconomics					
Direct workforce (worker-years through 2033)	47,000	47,000	47,000	49,000	50,000 to 53,000
Occupational health and safety					
Total worker-years	63,000	63,000	67,000	68,000	77,000 to 98,000
Exposed worker-years[d]	38,000	39,000	41,000	40,000	46,000 to 56,000
Accidents					
Maximum exposed individual dose (rem)	0.032	0.032	0.032	0.025	0.025
Exposed population dose (person-rem)	14	14	14	11	11
Utilities, energy, and materials					
Electricity use (gigawatt-hours)	5,900	6,700	9,400	11,000	24,000 to 32,000
Peak electrical demand (megawatts)	41	41	41	47	47 to 57
Fossil fuel (million liters)	300	320	390	390	420 to 620
Concrete (thousand cubic meters)	800	920	2,100	660	820 to 1,700
Steel (thousand metric tons)	210	270	810	160	210 to 310
Copper (thousand metric tons)	0.2	0.2	1.0	0.2	0.3 to 0.5
Repository-generated waste and hazardous material					
Construction and demolition debris (cubic meters)	150,000	150,000	150,000	220,000	220,000 to 810,000
Hazardous material (cubic meters)	7,700	7,700	7,700	8,400	8,400 to 15,000
Sanitary and industrial solid waste (cubic meters)	85,000	85,000	110,000	100,000	110,000 to 190,000
Sanitary sewage (million liters)	2,000	2,000	2,200	2,000	2,300 to 4,100
Industrial wastewater (million liters)	980	1,000	1,600	1,000	1,900 to 3,400
Low-level radioactive waste (cubic meters)	71,000	71,000	71,000	71,000	71,000 to 73,000
Other areas					
Transportation					
Transportation of nonradioactive materials (million kilometers)	100	110	140	100	130 to 190
Transportation of construction and operations workers (million kilometers)	360 to 430	380 to 450	360 to 440	470	540 to 680
Long-term performance					
10,000-year peak of the mean annual dose[e] (millirem/year)	0.22	0.13	0.059	0 (zero)[f]	0 (zero)[f]
Peak of the mean annual dose (post-10,000 years)[e] (millirem/year)	260	170	160	120	120[g]
Time at peak[e] (years after closure)	340,000	800,000	800,000	550,000	550,000[g]
Offsite manufacturing					
Titanium (thousand metric tons)	NA[h]	NA	NA	43	43 to 60

a. Values rounded to two significant figures.
b. Section 3.1 discusses each primary impact indicator individually.
c. If the reported values differ between packaging scenarios used in the Draft EIS, the reported values are for the uncanistered packaging scenario.
d. Workers likely to be exposed to radiation during work hours. See Section 3.1.7.
e. Postclosure receptor dose at 20 kilometers (12 miles).
f. Does not include igneous events or human intrusion. The evaluation of such events is independent of repository design evolution.
g. Assumed from higher-temperature case given that thermal differences effectively cease many years before first waste package failure.
h. NA = not applicable.

the corresponding proportional values that enabled meeting the lower-temperature operating mode criteria. The Department expressed the environmental impact results of this evaluation as a range, dependent on the particular operating parameter maximized for the analysis. DOE expects that the environmental impacts for the lower-temperature mode would fall somewhere within the ranges presented for all areas evaluated.

Section 3.1 discusses the evaluation of primary impact indicators and short-term environmental impacts for the environmental resource areas as they would occur with implementation of the S&ER flexible design and compares them to those in the Draft EIS. This section includes the evaluation of impacts from the shipment of nonradiological materials and offsite manufacturing as they relate to current design and operational modes. Section 3.2 discusses improvements in the performance assessment model and the effects of the current design on long-term peak doses. It also presents the comparable values from the Draft EIS. Section 3.3 provides a general perspective on the expected effects on the cumulative impacts presented in the Draft EIS.

3.1 Short-Term Impacts

This section discusses the primary impact indicators and short-term environmental impacts for the higher-temperature and lower-temperature repository operating modes of the S&ER flexible design, and presents the values for the Draft EIS thermal load scenarios in affected environmental resource areas for comparison purposes.

3.1.1 LAND USE AND OWNERSHIP

The S&ER flexible design would result in no changes to land use and ownership from those presented in the Draft EIS (DOE 1999, pp. 4-4 to 4-6). DOE would continue to maintain the current administrative land withdrawal, current right-of-way reservations, and the existing management agreements until Congress approved a permanent land withdrawal. DOE would obtain permanent control of the land surrounding the repository site. An area of approximately 600 square kilometers (150,000 acres) of Bureau of Land Management, U.S. Air Force, and DOE lands in southern Nevada would be sufficient (DOE 1999, p. 4-5). As necessary, DOE would clear land for repository and surface facility construction. The Department does not expect conflict with uses on surrounding lands because repository operations would occur in a confined, secure area over which it would have permanent control. This is existing Federal property, much of which DOE has used for site characterization for nearly two decades.

3.1.2 AIR QUALITY

DOE evaluated primary impact indicators in the areas of radiological and nonradiological air quality from releases of radionuclides and selected criteria pollutants, respectively, to the atmosphere prior to repository closure.

3.1.2.1 Radiological Air Quality

DOE evaluated the total activity of naturally occurring radon and radon decay products released from the repository over the lifetime of the project as the primary impact indicator of radiological air quality. In the Draft EIS analyses, exposure to radon and its decay products accounts for more than 99 percent of the potential radiation dose to members of the public (DOE 1999, p. 4-59).

Table 3-2 lists the total release of radon and its decay products for both the Draft EIS design and S&ER flexible design scenarios.

Table 3-2. Primary impact indicators for air quality.[a]

Primary impact indicators	Draft EIS thermal load scenario[b]			S&ER flexible design operating mode	
	High	Intermediate	Low	Higher-temperature	Lower-temperature
Radon release (curies)[c]	110,000	130,000	340,000	170,000	390,000 to 800,000
Particulate matter (kilograms/year)[d]	170,000	180,000	170,000	220,000	250,000 to 380,000
Gaseous pollutants (nitrogen dioxide, kilograms/year)[e]	130,000	130,000	230,000	87,000	88,000 to 96,000

a. Values rounded to two significant figures.
b. Sources: Radon, DOE 1999, Table G-48; particulate matter, DOE 1999, Tables G-5, G-7, G-10, G-13, G-17, and G-20; gaseous pollutants, DOE 1999, Tables G-19 (values doubled to account for two boilers during operations; see Section G.1.5.5) and G-26.
c. Radon release over the duration of the project through repository closure.
d. Construction phase, when releases would be highest.
e. Operation and monitoring phase, when releases would be highest.

In general, annual average radon releases would be higher for the S&ER flexible design than for the thermal load scenarios presented in the Draft EIS. For the S&ER flexible design, DOE used updated information on radon flux (picocuries per square meter of exposed rock surface per second) and the relationship of radon fluxes to ventilation flow rates in the repository (CRWMS M&O 2000d, all) to develop estimated releases of radon and its decay products from the repository. Higher ventilation flow rates for the S&ER flexible design would result in greater flux of naturally occurring radon from the surrounding rock into the repository. In addition, the project duration for the S&ER flexible design would be longer, ranging from 115 years (5 years for construction, 100 years for operation and monitoring, and 10 years for closure) to 341 years (5 years for construction, 324 years for operation and monitoring, and 12 years for closure), compared to 111 years to 120 years for the Draft EIS thermal load scenarios, enabling radon release from repository ventilation to occur over a longer period. The highest total radon release would result from the combination of the largest repository (with the largest exposed rock internal surface area and, thus, radon flux) and longest preclosure period.

In the Draft EIS design, the highest annual dose to the maximally exposed individual would range from 0.8 to 1.8 millirem. Estimated health impacts to the public over the duration of the project through repository closure from release of radon and its decay products would range from 0.14 to 0.41 latent cancer fatality for the three thermal load scenarios (DOE 1999, p. 4-59). To estimate the potential health impacts of the S&ER flexible design, DOE used the same relationship between radon releases and latent cancer fatalities it used in the Draft EIS. For the higher-temperature repository operating mode, the highest annual dose to the maximally exposed individual would be 1.2 millirem. The higher-temperature mode would result in an estimated 0.22 latent cancer fatality over the lifetime of the project. For the lower-temperature repository operating mode, the highest annual dose to the maximally exposed individual would range from 1.7 to 2.6 millirem. The lower-temperature mode would result in a range from 0.49 to 1.0 latent cancer fatality, depending on the amount of radon released, as listed in Table 3-2.

The use of natural ventilation rather than forced-air ventilation for some portion of the preclosure period would result in less than half of the radon released to the offsite public for that portion of the period.

3.1.2.2 Nonradiological Air Quality

DOE evaluated nonradiological air quality by looking at annual releases of selected criteria pollutants. Under the Draft EIS analysis, releases of fugitive dust during the construction phase would result in concentrations of particulate matter with an aerodynamic diameter of 10 micrometers or less (PM_{10}) that would be the highest percentage of the applicable standard of any criteria pollutant (DOE 1999, Table 4-1). Concentrations of gaseous pollutants (nitrogen dioxide, carbon monoxide, sulfur dioxide) would be highest during the operation and monitoring phase, and annual average concentrations of nitrogen dioxide would be the highest of the gaseous pollutants analyzed in the Draft EIS (DOE 1999, p. 4-12), ranging from 0.46 to 0.83 percent of the regulatory limit. Because all gaseous pollutants would be a very small

fraction of the limit, and because the relative differences in all gaseous pollutants would be the same, DOE evaluated releases of nitrogen dioxide as representative of the other gaseous pollutants.

Particulate Matter. Fugitive dust release estimates are a conservative representation of PM_{10} releases, because only a fraction of fugitive dust would have an aerodynamic diameter of 10 micrometers or less. The S&ER flexible design would have greater annual releases of fugitive dust during the construction phase than any of the Draft EIS thermal load scenarios listed in Table 3-2. These increases would result mainly from increased areas of surface land disturbance and the operation of a second concrete batch plant in the North Portal Operations Area (the Draft EIS analyzed only one batch plant, at the South Portal).

In the Draft EIS, the highest percentage of the annual regulatory limit for particulate matter releases during construction was 1.4 percent (DOE 1999, Table 4-1, p. 4-8). The releases for the S&ER flexible design would result in higher air concentrations but would still be small fractions of the applicable PM_{10} air quality standard. The higher-temperature repository operating mode would result in annual fugitive dust concentrations potentially reaching 1.7 percent of the PM_{10} limit. The lower-temperature repository operating mode would have estimated annual fugitive dust concentrations ranging from 1.9 to 2.9 percent of the regulatory limit. The highest concentration would be associated with the additional land disturbance needed for construction of the proposed surface aging facilities.

Gaseous Pollutants. Releases of gaseous pollutants during the operation and monitoring phase—specifically examined for nitrogen dioxide as described above—would be lower for the S&ER flexible design than for the Draft EIS thermal load scenarios. The decreases in gaseous emissions would be due in part to the fact that only one boiler would be operating (at the North Portal Operations Area) under the S&ER flexible design, although this boiler would have 40 percent higher emissions than the previous design. The Draft EIS thermal load scenarios included two boilers (one each in the North and South Portal Operations Areas). DOE eliminated the South Portal boiler, which it would have used to cure concrete for the repository, from the S&ER flexible design. Less concrete would be used in the repository because emplacement drifts would not be lined. In addition, because the excavated rock pile would generally be smaller under the S&ER flexible design—especially in comparison to the low thermal load scenario—the amount of fuel consumed and gaseous emissions for rock pile maintenance would be less.

In the Draft EIS, the highest percentage of the annual regulatory limit for nitrogen dioxide during the operation and monitoring phase was 0.83 percent (DOE 1999, Table 4-3, p. 4-12). The S&ER flexible design higher-temperature repository operating mode would result in annual nitrogen dioxide concentrations potentially reaching 0.31 percent of the regulatory limit. The lower-temperature repository operating mode would have estimated nitrogen dioxide concentrations ranging from 0.31 to 0.34 percent of the regulatory limit. Air concentrations and percentages of regulatory limits for other gaseous pollutants would be similarly reduced for the S&ER flexible design.

3.1.3 HYDROLOGY

The primary impact indicators for hydrology are annual water use and disturbed surface area. Annual water use is a measure of the potential effect on groundwater supplies, and total land area disturbed is a measure of the potential impact from surface-water runoff and infiltration. The Draft EIS discussed other indicators, including such concerns as discharges of water and the presence (and potential release) of contaminants through the completion of the closure phase. Potential impacts associated with these indicators would be minor, and changes in their quantity or potential for impacts under the S&ER flexible design parameters would be unlikely. Table 3-3 lists values for the primary impact indicators being evaluated.

Table 3-3. Primary impact indicators for hydrology.[a]

Primary impact indicators	Draft EIS thermal load scenario[b]			S&ER flexible design operating mode[c]	
	High	Intermediate	Low	Higher-temperature	Lower-temperature
Water use (acre-feet/year)[d]	250	260	480	230	240 to 360
Total disturbed area (square kilometers)	3.3	3.5	3.5	4.3	4.9 to 8.1

a. Values rounded to two significant figures.
b. Sources: Water use: DOE 1999, p. 4-27; total disturbed area: DOE 1999, p. 2-11 and pp. 2-16 to 2-23.
c. Sources: Water use: CRWMS M&O 2000c, Tables 6-9 and 6-16; CRWMS M&O 2000b, Table 6-2; McKenzie 2000, Option 1, Tables 1-9 and 1-16. Total disturbed area: CRWMS M&O 2000b, Table 6-2; CRWMS M&O 2000c, p. 4-9 and Figures 4-4 and 4-6; McKenzie 2000, Option 1, p. 24; Mattsson 2000, p. 21; derived from Griffith 2001, p. 8.
d. Operation and monitoring phase, when use would be highest.

3.1.3.1 Water Use

Annual water demand would be highest during the emplacement and development activities of the operation and monitoring phase. The estimated annual water demand for the higher-temperature repository operating mode would be less than the corresponding estimates for the thermal load scenarios in the Draft EIS. The reduced use of concrete and decreased subsurface excavation (with less need for water for dust suppression) would more than offset the increased demand due to construction of the solar power generating facility and ongoing dust suppression. There would be decreased water demand for the other project phases with the exception of the initial 3-year (CRWMS M&O 2000b, p. 53) surface facility decontamination period at the start of postclosure monitoring activities when decontamination of fuel inventory pools would require more water. The estimated annual water demand would be about 10 percent higher during these years (CRWMS M&O 2000b, Table 6-4; CRWMS M&O 2000c, Table 6-19). Water demand for each of the project phases would be less than the lowest estimates of perennial yield of the hydrographic area [580 acre-feet (720,000 cubic meters)] from which DOE would withdraw the water (DOE 1999, p. 4-29). *Perennial yield* is the amount of water that can be withdrawn annually without depleting the groundwater reserve, specifically for the Jackass Flats groundwater basin. Even adding these quantities to the ongoing Nevada Test Site water demand [280 acre-feet (350,000 cubic meters) per year] (DOE 1999, p. 4-28), withdrawals from this area for the higher-temperature mode would not exceed the lowest estimates of perennial yield.

For the lower-temperature repository operating mode, two variables with the potential to change water-use requirements would be repository size and surface aging. All options of the lower-temperature mode would have larger repository volumes and more subsurface excavation (McKenzie 2000, Option 1, Tables 1-4 and 1-11, and Option 2, Tables 1-4 and 1-11) than the higher-temperature repository operating mode (CRWMS M&O 2000c, Tables 6-4 and 6-11), but less than the Draft EIS low thermal load scenario (CRWMS M&O 1999c, Tables 6.1.1.4-1 and 6.1.2.4-1). More subsurface excavation would require increased water demand to support tunnel boring operations. Accordingly, annual water demand during emplacement and development activities for the lower-temperature mode would be higher than that for the higher-temperature mode, but lower than that for the Draft EIS low thermal load.

For the lower-temperature repository operating mode, the ability to age the waste prior to its placement in the repository would require the construction of a surface aging facility. This facility would involve water demands not included in the higher-temperature repository operating mode. Water demand for the phased construction effort, which would include significant amounts of concrete work, would be about 77 acre-feet (95,000 cubic meters) per year. However, because construction of a surface aging facility would not begin until about 2010, the analysis included the associated water demand with the operation and monitoring phase for the rest of the project, as listed in Table 3-3. There would be no water-intensive activities necessary to support surface aging facility operations. The low end of the annual water demand range listed in Table 3-3 for the lower-temperature mode is associated with the smallest repository under consideration and no surface aging facility. In contrast, the high end of the range represents the largest repository under consideration and the construction of a surface aging facility. Without construction of a

surface aging facility, the range of water demand for lower-temperature operations, combined with the ongoing Nevada Test Site water demand, would be below the lowest estimates of perennial yield for the hydrographic area. With construction of a surface aging facility and including ongoing Nevada Test Site water demand, lower-temperature operations would exceed low-end estimates of perennial yield by as much as 10 percent. This would occur during the 12 years the surface aging facility was under phased construction. However, the largest combined water demand (largest repository, construction of a surface aging facility, and the Nevada Test Site water demand) would represent only 16 percent of the highest estimates of perennial yield [4,000 acre-feet (4.9 million cubic meters)] for this hydrographic area (DOE 1999, p. 4-29). Annual water demand for other phases of the project would be very similar to those projected for the higher-temperature mode.

3.1.3.2 Land Area Disturbed

Land disturbance is associated with the potential to change both runoff and infiltration rates, and drainage and erosion patterns. The higher-temperature repository operating mode would result in an additional 0.8 square kilometer (200 acres) of land disturbance (CRWMS M&O 2000b, Table 6-2; CRWMS M&O 2000c, p. 4-9 and Figures 4-4 and 4-6) compared to that described in the Draft EIS (DOE 1999, Table 4-11). This difference includes the 0.24 square kilometer (60 acres) required for the solar power generating facility [based on estimates of land disturbance in Griffith (2001, p. 8) with a 10-percent increase for conservatism]. The rest of the land disturbance [0.6 square kilometer (150 acres)] would be due to increasing the number of ventilation shafts and surface stations from two in the high and intermediate thermal load scenarios to seven in the higher-temperature mode. The surface stations for fans and equipment would require only an estimated 0.03 square kilometer (7 acres) each (CRWMS M&O 2000c, Figures 4-4 and 4-6); the rest of the difference in disturbed area would be attributed primarily to the access roads that would have to be constructed to each station (CRWMS M&O 2000c, p. 4-9). The additional land disturbance would have associated design and engineering controls to minimize impacts to drainage channels, potential for increased erosion, and impacts from flash flooding.

The lower-temperature repository operating mode would require more subsurface excavation than the higher-temperature repository operating mode, resulting in increased land disturbance to support a larger excavated rock storage pile. The disturbed surface area associated with the excavated rock storage pile would range from about 30 to 60 percent higher than that needed for the higher-temperature mode. Including a surface aging facility would increase the disturbed area by as much as 2.4 square kilometers (600 acres) (Mattsson 2000, p. 21). About half of the area disturbed by the surface aging facility could eventually be covered by impermeable surfaces in the form of access roads, buildings and, as the largest contributor, about 0.8 square kilometer (200 acres) of concrete pads for the aging of commercial spent nuclear fuel (Mattsson 2000, p. 21). The disturbed surfaces, particularly those that would be covered with impermeable surfaces, would have impacts on stormwater runoff and infiltration and possibly on groundwater recharge in areas where the runoff was channeled. As with the higher-temperature mode, the additional land disturbance would have associated engineered controls to minimize impacts.

3.1.4 BIOLOGICAL RESOURCES

DOE evaluated the land area that would be disturbed during repository activities to gauge potential impacts to biological resources. As indicated in the Draft EIS, the primary source of potential short-term impacts to biological resources would be related to habitat loss or modification during facility construction and operations associated with the repository. Unlike hydrology, only the newly disturbed or to-be-disturbed land area would be of concern, because these would be areas where undisturbed biological resources could exist. As listed in Table 3-4, the higher-temperature repository operating mode would disturb about 0.8 square kilometer (200 acres) more land area than the Draft EIS thermal load scenarios. Land disturbance for the lower-temperature repository operating mode would be greater than

Table 3-4. Primary impact indicator for biological and cultural resources.[a]

Primary impact indicators	Draft EIS thermal load scenario[b]			S&ER flexible design operating mode	
	High	Intermediate	Low	Higher-temperature	Lower-temperature
Newly disturbed area (square kilometers)[c]	1.8	2	2	2.8	3.4 to 6.6

a. Values rounded to two significant figures.
b. Source: DOE 1999, Table 4-11.
c. To convert square kilometers to acres, multiply by 247.1.

that for the higher-temperature mode—as much as 6.6 square kilometers (1,600 acres) if DOE was to build and operate a surface aging facility.

The Draft EIS reported that the overall impacts to biological resources would be very small (DOE 1999, p. 4-29). Even though the amount of newly disturbed area would increase under the S&ER flexible design, the estimated impacts would still be very small because the biological resources in the Yucca Mountain region include species typical of the Mojave and Great Basin Deserts and generally common throughout those areas. Neither the removal of vegetation from the small area required for the repository nor the very small impacts to some species would affect the regional biodiversity and ecosystem function. The incremental disturbance of land associated with solar power generation would be about 0.24 square kilometer (60 acres). DOE would treat this as an operational area and would control vegetation to minimize potential interference with the solar power generating system. DOE does not expect significant impacts in the vicinity of the solar power generating system associated with changes in surface temperatures or the amount of water reaching the ground, including the potential for the introduction of non-native species.

The increase in land disturbance under the S&ER flexible design would cause additional loss of desert tortoise habitat and could cause the loss of a few more tortoises than the Draft EIS design. The disturbance would involve a very small percentage of the habitat in the region, and the population density of desert tortoises in the area is low in comparison to other parts of the range for this species. DOE anticipates that human activities at the site could directly affect individual tortoises, but does not expect the loss or displacement of these individuals to affect the continued survival of the species.

Heat released to the environment through venting of the repository or associated with an aging facility, if there was one, could influence the local microclimate in the immediate vicinity of the release point. Some animals could be attracted to warmer areas, particularly during periods of cold weather. The total heat removed at the peak—occurring between 10 and 15 years after completion of emplacement—would be about 40 megawatts-thermal (CRWMS M&O 2000c, pp. A-24 and B-2). In comparison, a typical fossil-fuel powerplant with a generating capacity of 1,000 megawatts-electric and 35 percent efficiency (Baird 2001) would release nearly 2,000 megawatts-thermal. Thus, heat released from Yucca Mountain at its peak would be less than 15 percent of that released from a single 1,000-megawatt-electric generating station. In addition, hundreds of thousand of megawatts of capacity reside with nonutilities, not to mention heat releases from commercial, residential, and transportation sources. Thus, measurable local, regional, or global impacts from heat released from the Yucca Mountain Repository would be unlikely.

Heat from the repository should disperse rapidly in the atmosphere, and any influences on plants or animals would be extremely localized and confined to the immediate vicinity of the heat source. As a consequence, heat vented from the repository would be unlikely to affect biological resources locally or globally.

3.1.5 CULTURAL RESOURCES

DOE evaluated the land area that would be disturbed during repository activities to gauge potential impacts to cultural resources. As listed in Table 3-4, the higher-temperature repository operating mode

would disturb about 0.8 square kilometer (200 acres) more land area than the Draft EIS thermal load scenarios. Land disturbance for the lower-temperature repository operating mode would be greater than that for the higher-temperature mode, as much as 3.8 square kilometers (940 acres) greater [or 6.6 square kilometers (1,600 acres) total] if DOE was to build and operate a surface aging facility that could be part of this operating mode.

The Draft EIS determined that potential impacts to cultural resources could occur in areas where ground-disturbing activities would take place (DOE 1999, p. 4-37). Increases in both surface activities and numbers of workers at the repository site could increase the potential for indirect impacts at archaeological sites near repository surface facilities. Human activities and increased access could result in harmful effects, both intentional and unintentional, to these fragile resources.

Several known archaeological sites in the vicinity of Midway Valley could be affected by ground-disturbing activities associated with the construction of the surface aging facility (see Figure 2-4 for location). An archaeological site occupies much of Midway Valley, including the general location of the proposed surface aging facility. This site was partially mitigated during site characterization activities in 1991 (Buck, Amick, and Hartwell 1994, all). In addition, intensive mitigation efforts were conducted at a nearby archaeological site in 1993, yielding nearly 25,000 artifacts (Buck et al. 1998, all). Other known archaeological sites occur in the vicinity of the possible location of the solar power generating facility. These sites have not been evaluated beyond field recording, some having been identified more than 20 years ago. One or more of these sites could be affected by construction at the primary location for the solar power generating facility, as well as such features as access roads and transmission cables. Based on the 1988 cultural resources Programmatic Agreement between DOE, the Advisory Council on Historic Preservation, and the Nevada State Historic Preservation Officer (DOE 1988, all), each of these archaeological sites is potentially eligible for listing on the *National Register of Historic Places*, although formal evaluations have not been completed. Possible impacts to these potentially significant resources cannot be fully delineated until the precise areas of ground disturbance are identified and the presence or absence of important cultural features or artifacts can be assessed for the disturbance areas. If important cultural resources are present in or adjacent to the areas to be disturbed by construction activities, DOE would develop and implement a mitigation plan to reduce adverse effects to the resources.

3.1.6 SOCIOECONOMICS

The primary parameter that influences changes to socioeconomic characteristics of the region of influence would be the direct workforce associated with repository activities. Table 3-5 lists the direct workforce as the total number of worker-years from the beginning of construction in 2005 through the end of operations in 2033 (DOE 1999, Table F-1). Socioeconomic analyses are limited to about 30 years because assumptions and estimated impacts beyond that period become too speculative. For the higher-temperature repository operating mode, DOE expects a 2,000-worker-year increase over the thermal load scenarios presented in the Draft EIS. This increase would be due mainly to more workers in surface facilities at the North Portal Operations Area supporting fuel blending operations (see Section 3.1.7). For the lower-temperature repository operating mode, the direct workforce would be larger, with 3,000 to 6,000 more total worker-years required to implement the action than for the thermal load scenarios. The largest number of worker-years would be required if DOE built and operated a surface aging facility.

Table 3-5. Primary impact indicator for socioeconomics.[a]

	Draft EIS thermal load scenario[b]			S&ER flexible design operating mode	
Primary impact indicators	High	Intermediate	Low	Higher-temperature	Lower-temperature
Direct workforce (worker-years through 2033)	47,000	47,000	47,000	49,000	50,000 to 53,000

a. Values rounded to two significant figures.

b. Source: DOE 1999, Table F-1. Worker-years through the end of operations.

The direct workforce affects indirect employment, changes in population, personal income, gross regional product, state and local spending, housing, and public services. The Draft EIS noted that potential incremental impacts in all of these areas would be small or would not change when comparing the projected baseline to the incremental increases generated by the maximum employment case (the combination of scenarios that could produce the highest incremental change in employment, and thus have the greatest potential to affect the socioeconomic environment). Employment and population changes in the region of influence would not exceed one-half of 1 percent under the thermal load scenarios of the Draft EIS (DOE 1999, p. 4-39). Direct employment under the S&ER flexible design could increase by as much as 13 percent over the Draft EIS employment levels. However, the absolute level of employment over the 30-year analysis period and the subsequent incremental changes in peak socioeconomic parameters would still be small—about the same as those reported in the Draft EIS, assuming the employment increase would have the same residential distribution as that assumed in the Draft EIS.

3.1.7 OCCUPATIONAL HEALTH AND SAFETY

Estimates of potential health and safety impacts to workers would be proportional to the types and numbers of workers employed. The number of workers would affect both the estimated number of industrial accidents and the potential radiation exposure to the worker population. DOE estimated changes in the number of total worker-years and "radiologically exposed" worker-years for the project duration. Table 3-6 lists the values.

Table 3-6. Primary impact indicators for occupational health and safety.[a]

Primary impact indicators	Draft EIS thermal load scenario[b]			S&ER flexible design operating mode	
	High	Intermediate	Low	Higher-temperature	Lower-temperature
Total worker-years	63,000	63,000	67,000	68,000	77,000 to 98,000
Exposed worker-years	38,000	39,000	41,000	40,000	46,000 to 56,000

a. Values rounded to two significant figures.
b. Source: DOE 1999, Table F-1.

DOE used all workers and, therefore, total worker-years to estimate potential impacts from industrial hazards because a worker in any workplace could be subject to common industrial accidents, although accident rates vary for different types of workers. "Exposed" workers include both radiation workers and some general employees. Radiation workers would be likely to receive radiation doses as a part of their work responsibilities. General employees could also receive some low-level radiation exposure—for example, from exposure to naturally occurring radon or ambient radiation from naturally occurring primordial radionuclides in the repository—even though they were not radiation workers and would not work in radiation areas. DOE used the total number of exposed worker-years to estimate potential impacts from the radiation dose received from this exposure, namely the number of latent cancer fatalities.

Overall, the total worker-years would increase considerably over the Draft EIS low thermal load scenario only for the lower-temperature repository operating mode, which would require 10,000 to 31,000 additional worker-years. There would be relatively small increases in worker-years during the operations period. Most of the increase would occur because of the lengthened monitoring and ventilation period for the lower-temperature mode. Estimated fatalities from industrial accidents would range from 1.8 to 2 for the Draft EIS thermal load scenarios (DOE 1999, p. 4-58). Estimated industrial fatalities would remain about 2 for the higher-temperature repository operating mode and would increase to 2.2 to 2.8 for the lower-temperature mode.

The number of radiation worker-years for the higher-temperature repository operating mode would decrease by 1,000 from the Draft EIS low thermal load scenario. The lower-temperature repository

operating mode would require 5,000 to 15,000 more exposed worker-years than the low thermal load scenario. Again, increases would result from the increased duration of the monitoring period for the lower-temperature mode. The estimated number of latent cancer fatalities in the worker population over the project duration would range from 3.7 to 4.3 for the Draft EIS thermal load scenarios (DOE 1999, p. 4-58), would be about 4.2 for the higher-temperature mode, and would increase to 5.1 to 6.9 for the lower-temperature mode.

3.1.8 ACCIDENTS

The S&ER flexible design includes design and operational changes that could influence the impacts from repository accidents. These changes include (1) reduction in the number of waste handling lines in the Waste Handling Building from five to three, (2) increase in spent nuclear fuel pool storage capacity to accommodate blending, and (3) modifications to the waste package design.

As a result of these changes, the categories of accidents to be evaluated have undergone minor revisions. The maximum reasonably foreseeable accident (at least 1 chance in 10 million per year) in the Draft EIS involved seismic collapse of the entire Waste Handling Building with damage to all fuel elements in dry storage in the building. This would also be the maximum accident for the S&ER flexible design. Potential impacts from this accident would be reduced somewhat for the S&ER flexible design because the estimated number of fuel assemblies in the Waste Handling Building damaged by a hypothetical earthquake has been reduced from 375 (DOE 1999, p. H-24) to 294 (Montague 2000, p. 1) and any hypothetical resulting damage would be reduced. Table 3-7 lists the doses to the maximally exposed individual at the site boundary and the exposed population within 80 kilometers (50 miles) of the maximum accident.

Table 3-7. Primary impact indicators for accidents.[a]

	Draft EIS thermal load scenario[b]			S&ER flexible design operating mode	
Primary impact indicators	High	Intermediate	Low	Higher-temperature	Lower-temperature
Maximum exposed individual dose (rem)	0.032	0.032	0.032	0.025	0.025
Maximum population dose (person-rem)	14	14	14	11	11

a. Values rounded to two significant figures.
b. Source: DOE 1999, Table H-8. Based on 95th-percentile meteorological conditions.

DOE selected radiation dose as the primary impact indicator because it can be converted under generally accepted standards to potential human health impacts. For the maximum accident, differences in radiation dose can be determined by the difference in the number of fuel assemblies damaged. In the Draft EIS, the estimated health impacts to the public from the maximum accident were a 0.000016 probability of a latent fatal cancer in the maximally exposed individual and 0.0072 latent cancer fatality in the exposed population (DOE 1999, p. 4-63). DOE used the same basis to estimate potential health impacts for the S&ER flexible design. These estimated impacts would be a 0.000013 probability of a latent fatal cancer in the maximally exposed individual and 0.0056 latent fatal cancer in the exposed population.

3.1.9 NOISE

The S&ER flexible design would result in very small changes to noise impacts from those presented in the Draft EIS (DOE 1999, pp. 4-65 to 4-66). As described in the Draft EIS, repository activities could generate elevated noise levels at the North Portal, South Portal, Emplacement Shaft, and Development Shaft Operations Areas that could affect workers during normal operations. The potential for noise impacts to the public would be very small due to the distances to any publicly accessible areas. DOE expects no large noise impacts to the public or workers.

3.1.10 AESTHETICS

The S&ER flexible design would result in very small changes to aesthetic impacts from those presented in the Draft EIS (DOE 1999, pp. 4-66 to 4-67). The Draft EIS considered the potential of a surface storage facility in Midway Valley as part of a retrieval scenario (DOE 1999, p. 4-108). It did not consider the presence and operation of a solar power generating facility. DOE would site and build a solar power generating facility such that no portion would be visible from publicly accessible areas. Yucca Mountain has visual characteristics fairly common to the region, and the visibility of the repository site from publicly accessible locations is low or nonexistent. The DOE evaluation of the scenic quality of Yucca Mountain, which used Bureau of Land Management methodology, concluded that the appropriate Visual Resource Management class for Yucca Mountain is C, which is the lowest rating. Repository activities would not cause adverse impacts to the aesthetic or visual resources in the region for the general public.

3.1.11 UTILITIES, ENERGY, AND MATERIALS

The use of utilities, energy, and materials would be affected by differences in the S&ER flexible design. These differences are discussed below and the values are listed in Table 3-8. The primary impact indicators are the same parameters DOE used in the Draft EIS to evaluate impacts.

Table 3-8. Primary impact indicators for utilities, energy, and materials.[a]

	Draft EIS thermal load scenario[b]			S&ER flexible design operating mode	
Primary impact indicators	High	Intermediate	Low	Higher-temperature	Lower-temperature
Electric power use (gigawatt-hours)	5,900	6,700	9,400	11,000	24,000 to 32,000
Peak electrical demand (megawatts)	41	41	41	47	47 to 57
Fossil fuel (million liters)	300	320	390	390	420 to 620
Concrete (thousand cubic meters)	800	920	2,100	660	820 to 1,700
Steel (thousand metric tons)	210	270	810	160	210 to 310
Copper (thousand metric tons)	0.2	0.2	1.0	0.2	0.3 to 0.5

a. Values rounded to two significant figures.
b. Source: DOE 1999, Tables 4-10, 4-37, and 4-38.

3.1.11.1 Electric Power

Total electric power use would increase by at least 1,600 gigawatt-hours for the higher-temperature repository operating mode over the Draft EIS thermal load scenarios, mainly due to additional requirements for operating storage pools in the surface facilities (CRWMS M&O 2000b, p. 21) and the repository ventilation fans. During the early stages of the operation and monitoring phase (2010 to 2033), the development of emplacement drifts would continue in parallel with emplacement activities, including the operation of ventilation fans. During this period, the peak electrical demand reported in the Draft EIS would be 41 megawatts (DOE 1999, Table 4-37, p. 4-68) or less, depending on the thermal load and packaging scenarios. For the S&ER flexible design higher-temperature mode, the peak electrical demand could increase by 6 megawatts to 47 megawatts, again due to operating storage pools and ventilation fans. Following the completion of excavation activities, the demand for electric power would drop and would continue to drop following the completion of emplacement. As reported in the Draft EIS, the repository demand for electricity would be well within the expected regional capacity for power generation (DOE 1999, Table 4-37, p. 4-68).

The Draft EIS noted that the estimated repository electric power demand would exceed the current transmission capacity to the site after construction began in 2005 (DOE 1999, pp. 4-70 and 4-71). DOE would have to increase the transmission capacity to the site to accommodate the initial demand of about 24 megawatts during the construction phase and to support the estimated peak demand of as much as 47 megawatts during the operation and monitoring phase. Although DOE is now considering the construction and operation of a 3-megawatt onsite solar power generating facility in conjunction with the

proposed repository (Griffith 2001, p. 1), that system would not alleviate the need for upgrading transmission capacity. This solar power generating facility would produce electric power for about 6 hours each day (Griffith 2001, p. 1), and DOE would feed the power produced by the system into the Nevada Test Site power grid from which the repository site draws power.

The lower-temperature repository operating mode would also increase electric power use and peak electrical demand, as listed in Table 3-8. The increased use and demand would be driven by additional ventilation duration, changes in repository size, and aging operations under lower-temperature mode options. The most dominant factor for electric power use would be the ventilation time, which, when extended to 300 years of postemplacement cooling, would substantially increase the total electric power use while the annual use remained essentially unchanged. The Draft EIS identified potential electric power impacts as less than 1 percent of the Nevada Power Company projected peak demand in 2010 (DOE 1999, p. 4-71). This is also the case for the S&ER flexible design. The use of natural ventilation rather than forced-air ventilation for some portion of the preclosure period would result in a substantial decrease in electric power use.

3.1.11.2 Fossil Fuels

Fossil fuels used during the construction, operation and monitoring, and closure of the repository would include diesel fuel and fuel oil. Under the higher-temperature repository operating mode, the consumption of fossil fuels would equal that for the low thermal load scenario for the S&ER flexible design. For the lower-temperature repository operating mode, use could increase by almost 60 percent. The increase would be due primarily to increased surface activity associated with aging and extended monitoring periods. The Draft EIS identified fossil-fuel impacts as less than 5 percent of the 1996 capacity in Clark, Lincoln, and Nye Counties (DOE 1999, p. 4-72). This is also the case for the S&ER flexible design.

3.1.11.3 Construction Material

The primary materials needed to construct the repository would be concrete, steel, and copper. Concrete, which consists of cement and aggregate, would be used for tunnel liners for the main and ventilation drifts in the subsurface and for the construction of the surface facilities. Aggregate for concrete would be developed onsite, and cement would be purchased regionally. Steel would be required for a variety of uses including rebar, piping, ground support, vent ducts, and tracks. The quantities of steel and concrete required for the higher-temperature repository operating mode would be about 20 percent and 31 percent, respectively, of those required for the Draft EIS low thermal load scenario. Slightly more concrete and steel would be used during construction of the storage pools in the Waste Handling Building, but substantially less of these materials would be used for development of the drifts because the total required drift length would be less (CRWMS M&O 2000c, Chapters 4 and 6). If DOE used surface aging in conjunction with the lower-temperature repository operating mode, the amount of concrete and steel used would still be less than the Draft EIS low thermal load. Approximately the same amount of copper would be used for the higher-temperature mode as for the Draft EIS intermediate thermal load. Copper would be used primarily for electrical wiring and equipment. For the lower-temperature mode, longer drifts and additional facilities would result in increased copper use over that for the higher-temperature mode, but the amounts would still be lower than those for the Draft EIS low thermal load scenario. The Draft EIS identified the potential impacts of construction material use (DOE 1999, pp. 4-72 to 4-73). These impacts are not likely to change for the S&ER flexible design.

3.1.12 MANAGEMENT OF REPOSITORY-GENERATED WASTE AND HAZARDOUS MATERIALS

The types of waste generated under the S&ER flexible design would be the same as those described in the Draft EIS and include construction and demolition debris, hazardous waste, sanitary and industrial solid waste, sanitary sewage, industrial wastewater, and low-level radioactive waste. Table 3-9 lists the estimated quantities of generated waste. DOE based the waste estimates for the S&ER flexible design on construction experience, water use estimates, and Yucca Mountain Site Characterization Project experience with wastewater generation from underground dust suppression. These estimates do not include used solar panels because DOE anticipates that recycling options would be available by the time the first solar panels would require replacement, about 2030. Solar panel replacement once every 20 years (Griffith 2001, p. 8) would generate about 350 metric tons (390 tons) of material.

Table 3-9. Primary impact indicators for repository-generated waste.[a]

	Draft EIS thermal load scenario[b]			S&ER flexible design operating mode	
Primary impact indicators	High	Intermediate	Low	Higher-temperature	Lower-temperature
Construction and demolition debris (cubic meters)	150,000	150,000	150,000	220,000	220,000 to 810,000
Hazardous material (cubic meters)	7,700	7,700	7,700	8,400	8,400 to 15,000
Sanitary and industrial solid (cubic meters)	85,000	85,000	110,000	100,000	110,000 to 190,000
Sanitary sewage (million liters)	2,000	2,000	2,200	2,000	2,300 to 4,100
Industrial wastewater (million liters)	980	1,000	1,600	1,000	1,900 to 3,400
Low-level radioactive waste (cubic meters)	71,000	71,000	71,000	71,000	71,000 to 73,000

a. Values rounded to two significant figures.
b. Source: DOE 1999, Table 4-42.

The quantities of each waste type would be affected by design enhancements and operating parameters. The estimated waste quantities generated under the higher-temperature operating mode would not exceed those presented for the Draft EIS low thermal load scenario with the exception of construction and demolition debris and hazardous waste, which are discussed below. The largest waste volumes would result from the lower-temperature repository operating mode if DOE used surface aging. Additional waste would be generated from the construction and demolition of the aging facility and 4,500 dry storage vaults, a potentially longer period of emplacement and aging, and a longer monitoring and maintenance period. DOE does not expect to generate mixed waste. However, repository facilities would also have the capability to package and temporarily store mixed waste that operations could generate in unusual circumstances.

3.1.12.1 Construction and Demolition Debris

The estimated quantities of construction and demolition debris would exceed those for the Draft EIS thermal load scenarios by at least 70,000 cubic meters (2.5 million cubic feet) due to differences in the size and design of surface facilities, mainly the solar power generating facility and four fuel inventory pools (CRWMS M&O 2000b, pp. 48 and 57). About 220,000 cubic meters (7.8 million cubic feet) of construction and demolition debris would be generated under the higher-temperature repository operating mode, and as much as 810,000 cubic meters (29 million cubic feet) under the lower-temperature operating mode. This debris would be disposed of at an onsite landfill designed to accommodate the waste volume. If DOE did not build a landfill at the repository site, it could ship construction and demolition debris to the Nevada Test Site's Area 10C landfill, which has a disposal capacity of 990,000 cubic meters (35 million cubic feet) (DOE 1996, p. 4-37). This landfill has an estimated 70-year operational life (DOE 1995, pp. 8 and 9). Debris generated under the higher-temperature mode would use about 22 percent of the Nevada Test Site landfill capacity. Disposal of lower-temperature repository construction and

demolition debris would use up to 82 percent of the landfill's current capacity, so expansion, as well as service life extension, would be necessary to accommodate both Nevada Test Site and repository debris.

3.1.12.2 Hazardous Waste

Hazardous waste, which would be the same for the Draft EIS design and the S&ER flexible design, would be packaged and shipped off the site for treatment and disposal. DOE could dispose of repository-generated waste in conjunction with the Nevada Test Site, which has contracts with commercial facilities, or it could contract separately with the same or another commercial facility with the appropriate permits and available treatment and disposal capacity. The estimated quantities of hazardous waste generated under the S&ER flexible design would exceed those for the Draft EIS thermal load scenarios by at least 700 cubic meters (25,000 cubic feet) due to differences in the size and design of surface facilities, mainly the solar power generating facility and four fuel inventory pools (CRWMS M&O 2000b, pp. 48 and 57). About 8,400 cubic meters (300,000 cubic feet) of hazardous waste would be generated under the higher-temperature operating mode and as much as 15,000 cubic meters (530,000 cubic feet) under the lower-temperature repository operating mode. The Environmental Protection Agency's National Capacity Assessment Report (EPA 1996, pp. 32, 33, 36, 46, 47, and 50) indicates that the estimated 1993 to 2013 capacity for treatment and disposal of solids and liquids at permitted facilities in the western states (including Nevada and other states to which repository waste could be shipped for treatment and disposal) is about seven times more than the demand for these services. The estimated landfill capacity is about 50 times the demand. Therefore, the impacts from the treatment and disposal of hazardous waste would be small.

3.1.12.3 Sanitary and Industrial Solid Waste

The quantity of sanitary and industrial solid waste generated would vary due to changes in the number of workers and length of the monitoring and closure periods. Repository-generated sanitary and industrial solid waste could be shipped to the Nevada Test Site for disposal in the Area 23 landfill, which has a capacity of 450,000 cubic meters (16 million cubic feet) (DOE 1996, p. 4-37) and an expected operational life of 100 years (DOE 1995, pp. 8 and 9). The S&ER flexible design would generate sanitary and industrial solid waste that would be similar to or nearly double the Draft EIS design. Under the higher-temperature repository operating mode, about 100,000 cubic meters (3.5 million cubic feet) of waste would be generated, using about 22 percent of the landfill capacity. The lower-temperature repository operating mode could generate from 110,000 to 190,000 cubic meters (3.9 to 6.7 million cubic feet) of waste, consuming from 24 to 42 percent of the landfill capacity. For this mode, landfill capacity expansion and service life extension would be necessary.

3.1.12.4 Sanitary Sewage and Industrial Wastewater

About 2 billion liters (530 million gallons) of sanitary sewage would be generated under the higher-temperature repository operating mode and as much as 4.1 billion liters (1.1 billion gallons) under the lower-temperature repository operating mode. About 1 billion liters (260 million gallons) of industrial wastewater would be generated under the higher-temperature mode and as much as 3.4 billion liters (900 million gallons) under the lower-temperature mode. Sanitary sewage and industrial wastewater for the S&ER flexible design would be slightly more than double the amounts for the Draft EIS design. As reported in the Draft EIS, DOE would treat and dispose of sanitary sewage in onsite septic systems and industrial wastewater in onsite evaporation ponds (DOE 1999, p. 4-77).

3.1.12.5 Low-Level Radioactive Waste

The amount of low-level radioactive waste generated under the S&ER flexible design for the higher-temperature repository operating mode would be the same as that for the Draft EIS design. About 71,000

cubic meters (2.5 million cubic feet) of low-level radioactive waste would result from the receipt and packaging of spent nuclear fuel and high-level radioactive waste during the operation and monitoring phase and from decontamination and decommissioning activities during the closure phase. DOE would treat this waste in the Waste Treatment Building. In the lower-temperature repository operating mode cases that involve aging, radiation surveys at the aging facility would generate small additional quantities of low-level radioactive waste. The lower-temperature mode would result in 71,000 to 73,000 cubic meters (2.5 to 2.6 million cubic feet) of low-level radioactive waste. DOE would dispose of this waste at the Nevada Test Site, which accepts low-level radioactive waste for disposal from other DOE sites and has an estimated disposal capacity of 3.15 million cubic meters (110 million cubic feet) (DOE 1998b, p. 2-19). Waste generated under either the higher-temperature or lower-temperature mode would use about 2.3 percent of this capacity.

3.1.13 ENVIRONMENTAL JUSTICE

The Draft EIS analysis determined that activities under any of the three thermal load scenarios would not have disproportionately high and adverse effects on minority or low-income populations. This Supplement considers activities at the repository site that could result in increased ground disturbance and numbers of workers over levels evaluated in the Draft EIS, as well as a possible surface aging facility and a solar power generating facility included in the S&ER flexible design. In most study areas, implementing either the higher-temperature or the lower-temperature repository operating mode would produce impact levels not materially different from the levels described in the Draft EIS. Therefore, for the reasons described in the Draft EIS, the implementation of the S&ER flexible design would not cause disproportionately high and adverse effects on minority or low-income populations.

American Indian Perspectives on the Yucca Mountain Site Characterization Project and the Repository Environmental Impact Statement, prepared by the American Indian Writers Subgroup of the Consolidated Group of Tribes and Organizations, expresses values held by Native Americans living in the region surrounding the proposed repository and describes particular places of cultural importance in the vicinity of the repository (AIWS 1998, pp. 2-13 to 2-15). The Draft EIS contains representative statements of views and beliefs excerpted from that document (DOE 1999, Section 4.1.13.4).

DOE recognizes that it could not construct and operate a repository at Yucca Mountain without some conflict with Native American concerns. DOE will continue to consult with tribal organizations and will work with representatives of the Consolidated Group of Tribes and Organizations to ensure the consideration of tribal rights and concerns before making decisions or implementing programs that could affect tribes. DOE will also continue its protection of Native American sacred sites, cultural resources, and potential traditional cultural properties, and will implement appropriate mitigation measures.

3.1.14 TRANSPORTATION

Transportation is not an environmental resource area, but rather a connected action that could result in environmental impacts.

Transportation of spent nuclear fuel and high-level radioactive waste to the repository would not be affected by the repository design evolution and is not evaluated in this Supplement. However, the S&ER flexible design would have different requirements for system components and construction materials. Transporting these materials and components from the manufacturer or supplier to the repository site could have environmental effects. In addition, the S&ER flexible design would result in different requirements for the transportation of workers.

The primary impact indicator for the evaluation of transportation impacts is the distance over which DOE would transport workers and the required material. Nonradiological environmental impacts, such as the

number of trailer-truck and automobile traffic fatalities and the health effects produced by vehicle emissions (including automobile and truck exhaust and fugitive dust), would be proportional to the distance traveled. Table 3-10 lists the distances. The evaluation used the same bases as the evaluation of nonradiological transportation impacts in the Draft EIS, which contains results for transportation of workers and materials for repository construction, operation and monitoring, and closure, including construction materials, supplies, equipment, disposal containers, consumables, office and laboratory supplies, samples, mail, and wastes (DOE 1999, Section J.3.6).

Table 3-10. Primary impact indicators for transportation.[a]

Primary impact indicators	Draft EIS thermal load scenario			S&ER flexible design operating mode	
	High	Intermediate	Low	Higher-temperature	Lower-temperature
Transportation of nonradioactive materials (million kilometers)[b]	100	110	140	100	130 to 190
Transportation of construction and operations workers (million kilometers)	360 to 430	380 to 450	360 to 440	470	540 to 680

a. Values rounded to two significant figures.
b. To convert kilometers to miles, multiply by 0.62137.

The S&ER flexible design would require the transportation of drip shields, emplacement pallets, solar panels, and materials for constructing the solar power generating facility to the repository site. The additional transportation distance for these new items would be more than offset by the reduction in quantity and transportation of concrete and steel in the S&ER flexible design. In addition, only cement would be transported for the S&ER flexible design while the aggregate for concrete would be prepared at the site. This differs from the assumption in the Draft EIS that all materials for concrete would be transported to the site, thereby reducing the number of shipments required.

In the Draft EIS, the transportation of nonradiological materials prior to repository closure would result in an estimated three to four traffic fatalities (DOE 1999, Tables J-62 and J-64). Based on the shorter total transportation distance required for the S&ER flexible design and the relationship between distance traveled and impacts presented in the Draft EIS, DOE estimates three traffic fatalities for the higher-temperature repository operating mode.

The farthest materials transportation distance required for the lower-temperature repository operating mode [190 million kilometers (118 million miles)] would involve a combination of the longest operation and monitoring period with the largest number of disposal containers. This mode could result in an estimated four to six traffic fatalities.

In the Draft EIS, transportation of workers over the life of the project would result in an estimated 3.6 to 4.5 traffic fatalities (DOE 1999, Table J-63). Based on the larger number of worker-years estimated for the higher-temperature repository operating mode, DOE estimates about 4.7 traffic fatalities. The lower-temperature repository operating mode could result in an estimated 5.4 to 6.8 traffic fatalities.

The Draft EIS illustrates that the number of possible fatalities estimated from inhalation of vehicle emissions over the life of the project resulting from the transportation of materials and workers through repository closure would be very small (0.12). Based on the relationship between these impacts and the distance traveled, as presented in the Draft EIS, the expected impacts for the S&ER flexible design would remain very small.

3.1.15 OFFSITE MANUFACTURING

Offsite manufacturing is not an environmental resource area but rather a connected action that could result in environmental impacts. In this Supplement, the comparison to the Draft EIS considers quantities of manufactured components, rather than the amount of material used to manufacture the components.

The S&ER flexible design provides an improved engineered barrier system including more corrosion-resistant materials for the waste packages, individual corrosion-resistant supports for the waste packages, and a titanium canopy over each waste package to serve as a drip shield. These components would be manufactured away from the site, increasing the breadth of potential environmental effects to offsite activities and locations. In addition, the construction of a 3-megawatt solar power generating facility as part of the S&ER flexible design would result in the need for about 27,000 solar panels (Griffith 2001, p. 2) that DOE would buy from offsite manufacturers every 20 years. The surface aging of some commercial spent nuclear fuel at the repository, which is an option under the lower-temperature repository operating mode, would result in the need to buy as many as 4,500 dry storage canister and cask systems from offsite sources.

The evaluation of offsite manufacturing used the same analysis methods as those described in the Draft EIS (DOE 1999, p. 4-86). Table 3-11 lists the quantities of components manufactured away from the site and analyzed for the higher-temperature and lower-temperature repository operating modes and the quantities for the Draft EIS thermal load scenarios.

Table 3-11. Quantities of offsite-manufactured components for the proposed Yucca Mountain Repository.

			S&ER flexible design operating mode	
Component	Description	Draft EIS[a]	Higher-temperature	Lower-temperature
Disposal containers	Containers for disposal of SNF[b] and HLW[b]	10,200 to 11,400	11,300	11,300 to 16,800
Rail shipping casks or overpacks	Storage and shipment of SNF and HLW	0 to 110	0 to 110	0 to 110
Legal-weight truck shipping casks	Storage and shipment of uncanistered fuel	10 to 120	10 to 120	10 to 120
Drip shields	Titanium cover for a waste package	0	10,500	11,300 to 15,000
Emplacement pallets	Support for emplaced waste package	(c)	11,300	11,300 to 16,800
Solar panels[d]	Photovoltaic solar panels – commercial units	0	27,000	27,000
Dry storage canisters[e]	Metal canister for commercial SNF assemblies during aging	0	0	0 to 4,500
Dry storage casks[e]	Concrete and steel dry storage vault for aging	0	0	0 to 4,500

a. Source: DOE 1999, Table 4-44.
b. SNF = spent nuclear fuel; HLW = high-level radioactive waste.
c. The waste package supports evaluated in the Draft EIS were not offsite manufactured components.
d. Number of panels in use at any one time.
e. Necessary only if DOE used the surface aging concept as part of a lower-temperature operating mode.

As currently planned, the disposal containers, shipping casks, and emplacement pallets would be manufactured over 24 years (CRWMS M&O 2000b, Figure 6-1) to support emplacement in the repository for the S&ER flexible design.

The titanium drip shields would not be needed until closure of the repository; therefore, the analysis assumed that delivery of these components to the repository would not begin until 76 to 300 years after the completion of emplacement. The solar power generating facility would be built over a 6-year period beginning in 2005 (Griffith 2001, p. 6).

The dry storage canisters and casks would be needed only if the surface aging concept was used in conjunction with the lower-temperature repository operating mode. Because surface aging would occur in parallel with emplacement, the canisters and casks and the waste packages would be manufactured during the same 24-year period.

The S&ER flexible design waste package would be more complex to manufacture than the Draft EIS design because of the corrosion-resistant materials used and the more complex configuration. Additional components, including the emplacement pallets and titanium drip shields, would primarily involve metal fabrication and would have fewer potential impacts than the waste packages because they would be much less complex to manufacture. DOE anticipates that the additional components would not be manufactured at the same facilities as the waste packages or other components. The factors related to manufacturing shipping casks have not changed from the Draft EIS.

The 27,000 solar panels would be manufactured over a 6-year period. The panels would be commercially available components that DOE could buy from several vendors, so any new types of environmental impacts would be unlikely. They would be replaced about every 20 years over the life of the project.

Concrete dry storage casks, if used for surface aging under the lower-temperature repository operating mode, would be partially fabricated at the repository site. The carbon-steel shell would be manufactured away from the site while the concrete would be placed in the shell on the site. Each shell would be 3.4 meters (11 feet) in diameter by 5.9 meters (19 feet) high and would be made from 1.9 to 13-centimeter (0.75 to 5-inch)-thick carbon-steel plate. The shell would weigh about 25 to 30 metric tons (28 to 33 tons), which is about the same weight as an empty waste package, but it would be fabricated from less expensive carbon steel and manufactured to less demanding procedures and specifications.

The material requirements to manufacture the components for the S&ER flexible design have increased slightly. The titanium for the drip shields is a new material that the Draft EIS did not evaluate. Fabrication of the drip shields would require from 43,000 to 60,000 metric tons (47,000 to 66,000 tons) of titanium, depending on the spacing between waste packages. Titanium is classified as a Federal Strategic and Critical Inventory material, but the annual repository requirement would be less than 8 percent of the current U.S. production capacity (Gambogi 1997, p. 80.7) if the 60,000 metric tons were required over the 10-year period when the drip shields would be manufactured. Titanium is the ninth most common element in the Earth's crust (U.S. Bureau of Mines 1985, p. 859), but it is somewhat difficult to refine into metal. Because the drip shields would not be needed until repository closure, there would be adequate time to expand production.

The Draft EIS presents the impacts associated with offsite manufacturing of disposal containers and shipping casks for air quality, health and safety, socioeconomics, material use, waste generation, and environmental justice (DOE 1999, Section 4.1.15). The same general conclusions are assumed to apply for the S&ER flexible design, in that impacts would be small. The Final EIS will contain a detailed analysis of the impacts of all offsite manufacturing for the S&ER flexible design.

3.2 Long-Term Impacts

This section summarizes important design enhancements to long-term performance, improvements in the Total System Performance Assessment model since the Draft EIS, and the resulting effects on long-term performance in terms of the mean peak radiation dose to a receptor located 20 kilometers (12 miles) from the repository.

3.2.1 IMPORTANT DESIGN ENHANCEMENTS

Important design enhancements since the publication of the Draft EIS that would affect long-term repository performance are the addition of titanium drip shields over the waste packages and the redesign of the waste packages incorporating an outer layer of Alloy-22. These changes would combine to prolong the period before any initial release of radionuclides from waste packages.

3.2.2 CHANGES TO THE ASSESSMENT MODEL FOR LONG-TERM PERFORMANCE

Table 3-12 lists the basic structure of the Total System Performance Assessment model for the nominal case [*Yucca Mountain Science and Engineering Report: Technical Information Supporting Site Recommendation Consideration* (DOE 2001a, Section 4.4.1)], which is very similar to that used in the Draft EIS (DOE 1999, Chapter 5). The nominal case models repository behavior with no unexpected natural events or human intrusion. One difference is the addition of a subsystem model for the degradation of the drip shield, which was not in the Draft EIS design. The implementation of some of the subsystem models has changed. Table 3-13 summarizes the major changes and their effects on the peak of the mean annual radiation dose to the receptor. The Science and Engineering Report sections listed as references in Table 3-13 contain more details on the models. Subsystem models with very minor changes in implementation are not listed. Most of the subsystem models incorporate updated and more recent data. In particular, they incorporate new data from various underground tests in the repository horizon and data from laboratory tests. The Science and Engineering Report contains more details on new data sets (DOE 2001a, Section 4.2).

Table 3-12. Basic structure of the Total System Performance Assessment model.

Model components	Subsystem model
Unsaturated zone flow	Climate, infiltration, unsaturated zone flow above repository, seepage, coupled processes effects on unsaturated zone flow
Engineered barrier system environment	Mountain scale thermal-hydrologic model, drift scale thermal-hydrologic model, in-drift geochemical model
Waste package and drip shield degradation	Waste package and drip shield degradation model
Waste form degradation	Solubilities, inventory, in-package chemistry, colloid model, cladding degradation model, waste form dissolution model, seismic cladding model
Engineered barrier system transport	Radionuclide transport model, colloid model
Unsaturated zone transport	Unsaturated zone transport model, colloid model
Saturated zone flow and transport	Saturated zone flow and transport model
Biosphere	Soil removal, biosphere dose conversion factor, wellhead dilution

For the integration of the Total System Performance Assessment, the software used for the Draft EIS analysis has been superseded by an updated software package called GoldSim® (a product of Golder Associates under license to DOE). GoldSim® incorporates much the same performance assessment calculational approach, but with substantial improvements in the user interface and data handling.

3.2.3 RESULTS FOR LONG-TERM PERFORMANCE

Analysis of the S&ER flexible design using the new model formulations and updated and improved data sets for many of the model input parameters, as discussed above, produced the following results. During

Table 3-13. Changes to the Total System Performance Assessment model.

Submodel	Change	Estimated effect	Reference[a]
Unsaturated zone flow	Updated climate model	Neutral	4.2.1.1.1
	Added interaction of moisture in fractures and rock matrix	Possible reduction in dose	4.2.1.1.4
	Added perched water models	Neutral	4.2.1.3.1.2
	Flow through unsaturated zone and, therefore, seepage varies with time	More climate sensitivity, possible increase in dose	4.2.1.3.6
	Coupling between thermal, hydrologic, and chemical effects	Possible increase in dose	4.2.2.1.2
Waste package and drip shield degradation	Changes to model new package design and addition of drip shield model	Decrease in dose up to 10,000 years	4.2.4.3
	Experimental corrosion data replacing expert judgment	Decrease in dose up to 10,000 years, increase in peak dose after 10,000 years	4.2.4.3.2
Waste form degradation	More detailed cladding degradation model that includes mechanical failures and localized corrosion	Increase in dose	4.2.6.3.3
	Add comprehensive model of colloid formation effects on radionuclide mobilization	Increase in dose	4.2.6.3.8
	Increased number of radionuclides modeled from 9 to 21	Increase in dose	4.4.1.4
	Neptunium solubility model incorporating secondary phases	Decrease in dose after 10,000 years	4.2.6.3.7
Engineered barrier system transport	New comprehensive model for transport of radionuclides from colloid effects	Increase in dose	4.2.7.4.2
Unsaturated zone transport	New comprehensive model for transport of radionuclides from colloid effects	Increase in dose	4.2.8.4.3
Saturated zone flow and transport	Colloid-facilitated transport in two modes: as an irreversible attachment of radionuclides to colloids, originating from waste, and as an equilibrium attachment of radionuclides to colloids	Increase in dose	4.2.9.4
	Three-dimensional transport model	Neutral	4.2.9.4
	Plume capture method for well concentrations (total radionuclides dissolved in water usage)	Possible decrease in dose	4.2.9.4
Biosphere	Change from MEI in the Draft EIS to "receptor," with a slightly different definition consistent with proposed EPA and NRC regulations[b]	Neutral	4.2.10.1

a. Section numbers in the *Yucca Mountain Science and Engineering Report: Technical Information Supporting Site Recommendation Consideration* (DOE 2001a).

b. Abbreviations: MEI = maximally exposed individual; EPA = Environmental Protection Agency; NRC = Nuclear Regulatory Commission.

the first 10,000 years after closure, the peak of the mean annual dose to a receptor at 20 kilometers (12 miles) for the Proposed Action inventory and nominal scenario for the higher-temperature repository operating mode would be zero (CRWMS M&O 2000e, Section 4.1.1) because waste packages would remain intact for more than 10,000 years. Doses for the lower-temperature repository operating mode

would also be zero for the first 10,000 years because waste packages would remain intact for as long as or longer than for the higher-temperature mode (CRWMS M&O 2000e, Section 4.6.2). The peak of the mean annual dose (post-10,000 years) to the receptor for the Proposed Action inventory and nominal case would be approximately 25 percent less than the dose reported for the low thermal load scenario, which produced the lowest dose of the three thermal loads discussed in the Draft EIS. The peak of the mean dose would occur approximately 550,000 years after repository closure (DOE 2001a, Figure 4-190). Table 3-14 lists the values.

Table 3-14. Primary impact indicators for long-term performance.[a]

Primary impact indicators	Draft EIS thermal load scenario[b]			S&ER flexible design operating mode	
	High	Intermediate	Low	Higher-temperature	Lower-temperature
10,000-year peak of the mean annual dose[c] (millirem/year)	0.22[d]	0.13[d]	0.059[d]	0 (zero)[d]	0 (zero)[d]
Peak of the mean annual dose (post-10,000 years)[c] (millirem/year)	260	170	160	120	120[e]
Time at peak[c] (years after closure)	340,000	800,000	800,000	550,000	550,000[e]

a. Values rounded to two significant figures.
b. Source: DOE 1999, Tables 5-6, 5-8, and 5-12.
c. Postclosure receptor at 20 kilometers (12 miles).
d. Does not include disruptive (igneous) events or human intrusion.
e. Assumed from higher-temperature case given that thermal differences effectively cease many years before first waste package failure.

The proposed standard of the Environmental Protection Agency (40 CFR Part 197; 64 *FR* 46976, August 27, 1999) would require DOE to look at a period as long as 10,000 years for meeting quantitative standards for protecting health and safety. The proposed standard also would require DOE to look farther out in time to see when the peak dose would occur, and how high it could be. Table 3-14 lists the peak of the mean annual dose out of 300 simulated dose histories for a 1-million-year period. The estimated mean annual dose would reach a peak of about 120 millirem per year [to the receptor 20 kilometers (12 miles) from the site] at about 550,000 years, and would decline thereafter for the current most reasonable modeling case (DOE 2001a, Figure 4-190).

3.3 Cumulative Impacts

Chapter 8 of the Draft EIS (DOE 1999) evaluated the environmental impacts of repository activities coupled with the impacts of other past, present, and reasonably foreseeable Federal, non-Federal, and private actions. These are referred to as cumulative impacts. Chapter 8 included a detailed analysis of nuclear material in excess of the Proposed Action quantities, referred to as Inventory Modules 1 and 2. The additional material would consist of additional spent nuclear fuel, high-level radioactive waste, and wastes not considered in the Nuclear Waste Policy Act, as amended (42 USC 10101 *et seq.*), but reasonably foreseeable as candidates for disposal in a geologic repository.

Changes in cumulative impacts associated with the S&ER flexible design would be proportional to the change between the Proposed Action in the Draft EIS and the impacts discussed in Chapter 3 of this Supplement. This relationship would be most noticeable in estimating the impacts from Inventory Modules 1 and 2. For example, a 20-percent increase over the Draft EIS low thermal load scenario of the Proposed Action by the S&ER flexible design lower-temperature repository operating mode would be likely to result in a 20-percent increase over the low thermal load scenario in that specific impact for the inventory modules. Other than the inventory modules, DOE expects cumulative impacts to be essentially the same as those presented in Chapter 8 of the Draft EIS.

Appendix A

References

APPENDIX A. REFERENCES

The following is a list of the references cited in this Supplement. A DOE tracking and retrieving document identification number follows each reference citation. The purpose of these numbers is to assist the reader in locating a specific reference. Some reference citations have more than one tracking number, designating multiple volumes or a series of documents that relate to that particular reference.

Note: In an effort to ensure consistency among Yucca Mountain Project documents, DOE has altered the format of the references and some of the citations in the text in this Supplement from that in the Draft EIS. The following list contains notes when applicable for references cited differently in the Draft EIS.

AIWS 1998	AIWS (American Indian Writers Subgroup) 1998. *American Indian Perspectives on the Yucca Mountain Site Characterization Project and the Repository Environmental Impact Statement.* Las Vegas, Nevada: Consolidated Group of Tribes and Organizations. ACC: MOL. 19980420.0041.
Baird 2001	Baird, S. 2001. "Energy Fact Sheet, Coal." [Toronto, Canada]: International Council for Local Environmental Initiatives. Accessed 3/28/2001. www.iclei.org/efacts/coal.htm. On Order Library Tracking Number-225907.
Buck, Amick, and Hartwell 1994	Buck, P.E.; Amick, D.S.; and Hartwell, W.T. 1994. *The Midway Valley Site (26NY4759): A Prehistoric Lithic Quarry Near Yucca Mountain, Nye County, Nevada.* Topics in Yucca Mountain Archaeology Number 1. Las Vegas, Nevada: Desert Research Institute. TIC: 217706.
Buck et al. 1998	Buck, P.E.; Hartwell, W.T.; Haynes G.; and Rhode, D. 1998. *Archaeological Investigations at Two Early Holocene Sites Near Yucca Mountain, Nye County, Nevada.* Topics in Yucca Mountain Archaeology Number 2. Las Vegas, Nevada: Desert Research Institute. TIC: 242888.
Cohon 2000	Cohon, J.L. 2000. Comments of Nuclear Waste Technical Review Board on Meeting of August 1 and 2, 2000, in Carson City, Nevada. Letter from J.L. Cohon (NWTRB) to I. Itkin (DOE/OCRWM), September 20, 2000, with attachments. ACC: MOL.20001019.0136.
CRWMS M&O 1999a	CRWMS M&O (Civilian Radioactive Waste Management System Management & Operating Contractor) 1999. *License Application Design Selection Report.* B00000000-01717-4600-00123 REV 01 ICN 01. Las Vegas, Nevada: CRWMS M&O. ACC: MOL.19990908.0319.
CRWMS M&O 1999b	CRWMS M&O (Civilian Radioactive Waste Management System Management & Operating Contractor) 1999. *Repository Surface Design Engineering Files Report.* BCB000000-01717-5705-00009 REV 03. Las Vegas, Nevada: CRWMS M&O. ACC: MOL.19990615.0238. In the Draft EIS, this reference was cited as TRW 1999a in Chapter 12.

CRWMS M&O 1999c — CRWMS M&O (Civilian Radioactive Waste Management System Management & Operating Contractor) 1999. *Engineering File - Subsurface Repository.* BCA000000-01717-5705-00005 REV 02 DCN 01. Las Vegas, Nevada: CRWMS M&O. ACC: MOL.19990621.0157; MOL.19990615.0230.
In the Draft EIS, this reference was cited as TRW 1999b in Chapter 12.

CRWMS M&O 2000a — CRWMS M&O (Civilian Radioactive Waste Management System Management & Operating Contractor) 2000. *Subsurface Facility System Description Document.* SDD-SFS-SE-000001 REV 01. Las Vegas, Nevada: CRWMS M&O. ACC: MOL.20000807.0078.

CRWMS M&O 2000b — CRWMS M&O (Civilian Radioactive Waste Management System Management & Operating Contractor) 2000. *Repository Surface Design Engineering Files Report Supplement.* TDR-WHS-EV-000001 REV 00 ICN 1. Las Vegas, Nevada: CRWMS M&O. ACC: MOL.20000626.0025.

CRWMS M&O 2000c — CRWMS M&O (Civilian Radioactive Waste Management System Management & Operating Contractor) 2000. *FEIS Update to Engineering File - Subsurface Repository.* TDR-EBS-MD-000007 REV 00 ICN 01. Las Vegas, Nevada: CRWMS M&O. ACC: MOL.20000612.0058.

CRWMS M&O 2000d — CRWMS M&O (Civilian Radioactive Waste Management System Management & Operating Contractor) 2000. *Ventilation System Radon Review.* CAL-SSM-NU-000002 REV 00. Las Vegas, Nevada: CRWMS M&O. ACC: MOL.20000510.0167.

CRWMS M&O 2000e — CRWMS M&O (Civilian Radioactive Waste Management System Management & Operating Contractor) 2000. *Total System Performance Assessment for the Site Recommendation.* TDR-WIS-PA-000001 REV 00 ICN 01. Las Vegas, Nevada: CRWMS M&O. ACC: MOL.20001220.0045.

DOE 1988 — DOE (U.S. Department of Energy) 1988. *Programmatic Agreement Between the United States Department of Energy and the Advisory Council on Historic Preservation for the Nuclear Waste Deep Geologic Repository Program, Yucca Mountain, Nevada.* Washington, D.C.: U.S. Department of Energy. ACC: HQX.19890426.0057.

DOE 1995 — DOE (U.S. Department of Energy) 1995. *Final Environmental Assessment for Solid Waste Disposal, Nevada Test Site, Nye County, Nevada.* DOE/EA-1097. Washington, D.C.: U.S. Department of Energy. TIC: 235646.

DOE 1996 — DOE (U.S. Department of Energy) 1996. *Final Environmental Impact Statement for the Nevada Test Site and Off-Site Locations in the State of Nevada.* DOE/EIS 0243. Las Vegas, Nevada: U.S. Department of Energy, Nevada Operations Office. TIC: 239895.

DOE 1998a — DOE (U.S. Department of Energy) 1998. *Viability Assessment of a Repository at Yucca Mountain.* DOE/RW-0508. Overview and five volumes. Washington, D.C.: U.S. Department of Energy, Office of Civilian Radioactive Waste Management. ACC: MOL.19981007.0027; MOL.19981007.0028; MOL.19981007.0029; MOL.19981007.0030; MOL.19981007.0031; MOL.19981007.0032.

DOE 1998b — DOE (U.S. Department of Energy) 1998. *The Current and Planned Low-Level Waste Disposal Capacity Report.* Revision 1. Washington, D.C.: U.S. Department of Energy. TIC: 243825.

DOE 1999 — DOE (U.S. Department of Energy) 1999. *Draft Environmental Impact Statement for a Geologic Repository for the Disposal of Spent Nuclear Fuel and High-Level Radioactive Waste at Yucca Mountain, Nye County, Nevada.* DOE/EIS-0250D. Summary, Volumes I and II. Washington, D.C.: U.S. Department of Energy, Office of Civilian Radioactive Waste Management. ACC: MOL.19990816.0240.

DOE 2001a — DOE (U.S. Department of Energy) 2001. *Yucca Mountain Science and Engineering Report: Technical Information Supporting Site Recommendation Consideration.* DOE/RW-0539. Washington, D.C.: U.S. Department of Energy, Office of Civilian Radioactive Waste Management. URN-0817.

DOE 2001b — DOE (U.S. Department of Energy) 2001. *Preapproval Draft Environmental Assessment for a Proposed Alternative Energy Generation Facility at the Nevada Test Site*. DOE/EA-1370 Draft. Las Vegas, Nevada: U.S. Department of Energy, Nevada Operations Office. ACC: MOL.20010411.0255.

EPA 1996 — EPA (U.S. Environmental Protection Agency) 1996. *National Capacity Assessment Report: Capacity Planning Pursuant to CERCLA Section 104(c)(9).* EPA530-R-95-016. Washington, D.C.: U.S. Environmental Protection Agency. TIC: 242975.

Gambogi 1997 — Gambogi, J. 1997. "Titanium." In *Metals and Minerals 1997,* Volume 1, pp. 80.1 and 80.15 of *Minerals Yearbook.* Washington D.C.: United States Government Printing Office. TIC: 249084.

Griffith 2001 — Griffith, G.W. 2001. "Repository Surface Design Engineering Files Letter Report - MGR Solar Power System (Revision 2)." Letter from G.W. Griffith (CRWMS M&O) to D. Kane (DOE/YMSCO) and K. Skipper (DOE/YMSCO), February 5, 2001, LV.SFD.GWG.02/01-010, with enclosure. ACC: MOL.20010320.0365.

Mattsson 2000 — Mattsson, C.G. 2000. "Repository Surface Design Engineering Files Letter Report - Non-Boiling Repository Surface Facilities Conceptual Design." Letter from C.G. Mattsson (CRWMS M&O) to K.J. Skipper (DOE/YMSCO), July 21, 2000, LV.SFD.CGM.7/00-058, with enclosure. ACC: MOL.20000828.0028.

McKenzie 2000	McKenzie, D.G., III 2000. "Environmental Impact Statement (EIS) Supplemental Information." Letter from D.G. McKenzie III (CRWMS M&O) to K.J. Skipper (DOE/YMSCO), July 13, 2000, LV.SSDS.DGM.07/00-029, with enclosures ("Non-Boiling Thermal Concept - Option 1" and "Non-Boiling Thermal Concept - Option 2"). ACC: MOL.20000828.0026.
Montague 2000	Montague, K. 2000. "Facility Inventory." E-mail from K. Montague (CRWMS M&O) to P. Davis (Jason Technologies Corporation), July 27, 2000. ACC: MOL.20001019.0131.
Parker 1999	Parker, G.J. 1999. "Baseline Change Proposal (BCP)-00-99-0009, Rev 0: Incorporate License Application Design Selection (LADS) Enhanced Design Alternative (EDA) II into the YMSCO Project Baseline." Memorandum from G.J. Parker (DOE/OCRWM) to L. Barrett (DOE/OCRWM), September 10, 1999, with attachments. ACC: MOV.19990927.0003.
U.S. Bureau of Mines 1985	U.S. Bureau of Mines 1985. *Mineral Facts and Problems.* 1985 Edition. Bulletin 675. Washington, D.C.: U.S. Department of Interior. TIC: 231110.

Appendix B

Glossary

APPENDIX B. GLOSSARY

Note: A number of the terms in the Glossary emphasize their project-specific relationship to the Yucca Mountain Repository EIS. Words in *italics* refer to other words in this glossary.

10,000-year peak of the mean annual dose

For this Supplement, the largest annual *dose* analyzed within the first 10,000 years. See *peak of the mean annual dose (post-10,000 years)*.

accident

An unplanned sequence of events that results in undesirable consequences. Examples in this EIS include an inadvertent release of *radioactive* or hazardous materials from their containers or confinement to the *environment*; vehicular accidents during the transportation of highly radioactive materials; and industrial accidents that could affect workers in the facilities.

acre-foot

The volume of water required to cover 1 acre to a depth of 1 foot (about 1,200 cubic meters or 330,000 gallons).

affected environment

For an EIS, a description of the existing *environment* (that is, site description) covering information that relates directly to the scope of the *Proposed Action*, the No-Action Alternative, and the implementing alternatives being analyzed; in other words, the information necessary to assess or understand the *impacts*. This description must contain enough detail to support the impact analysis. The information must highlight "environmentally sensitive resources," if present; these include floodplains and wetlands, threatened and endangered species, prime and unique agricultural lands, and property of historic, archaeological, or architectural significance.

aging

Retaining *commercial spent nuclear fuel* on the surface at the proposed repository for future loading in a *disposal container*.

alkalinity

Acid-neutralizing capacity of a substance. High alkalinity conditions can promote metal corrosion.

Alloy-22

A high-nickel alloy used for the outer barrier of the waste package, and for the emplacement pallet.

areal mass loading

Used in thermal loading calculations, the amount of *heavy metal* (usually expressed in metric tons of uranium or equivalent) emplaced per unit area in the proposed repository.

backfill

The general fill that is placed in the excavated areas of an underground facility. If used, the backfill for the proposed repository could be *tuff* or other material.

barrier

Any material, structure, or condition that prevents or substantially delays the movement of water or radionuclides. See *natural barrier*.

blending
See *fuel blending.*

boiling-water reactor
(1) A nuclear power reactor that produces steam in the primary system. (2) A *nuclear reactor* that uses boiling water to produce steam to drive a turbine.

borehole
A hole drilled for purposes of collecting site characterization data or for supplying water.

cladding
The metallic outer sheath of a fuel element generally made of a zirconium alloy. It is intended to isolate the fuel element from the external *environment*.

closure
See *repository phases*.

commercial spent nuclear fuel
Commercial nuclear fuel rods that have been removed from *reactor* use. See *spent nuclear fuel* and *DOE spent nuclear fuel.*

construction
See *repository phases.*

defense-in-depth
(1) A design strategy based on a system of multiple, independent, and redundant barriers, designed to ensure that failure in any one barrier does not result in failure of the entire system. (2) The term used to describe a system of multiple barriers that mitigate uncertainties in conditions, processes, and events.

design alternative
A fundamentally different conceptual design for a repository, which could stand alone as the *License Application* repository design concept.

design feature
A specific element or attribute of the repository for which postclosure (long-term) performance could be evaluated independently of a specific repository *design alternative* or other design features.

disposal container
The vessel consisting of the *barrier* materials and internal components in which the canistered or uncanistered waste form would be placed. The disposal container would include the container barriers or shells, spacing structures or baskets, shielding integral to the container, packing contained within the container, and other absorbent materials designed to be placed internal to the container or immediately surrounding the disposal container (i.e., attached to the outer surface of the container). The filled, sealed, and tested disposal container is referred to as the *waste package*, which would be emplaced in the repository.

DOE spent nuclear fuel
Radioactive waste created by defense activities that consists of more than 250 waste forms. The major contributor to this waste form is the N-reactor fuel currently stored at the Hanford Site. This waste form also includes *naval spent nuclear fuel*.

dose

The amount of radioactive energy taken into (absorbed by) living tissues.

drift

From mining terminology, a horizontal underground passage. Includes excavations for *emplacement* (emplacement drifts) and access (main drifts).

drip shield

A corrosion-resistant engineered *barrier* that would be placed above the *waste package* to prevent seepage water from directly contacting the waste packages for thousands of years. The drip shield would also offer protection to the waste package from rockfall.

dual-purpose canister

A canister suitable for storing (in a storage facility) and shipping (in a shipping cask) *spent nuclear fuel* assemblies. At the repository, dual-purpose canisters would be removed from the shipping cask and opened. The spent nuclear fuel assemblies would be removed from the canister and placed in a disposal container. The opened canister would be recycled or disposed of offsite as low-level *radioactive* waste.

emplacement

The placement and positioning of *waste packages* in the repository emplacement *drifts*.

emplacement horizon

See *repository horizon.*

engineered barrier system

The designed, or engineered, components of the underground facility, including the *waste packages* and other engineered *barriers*.

enhanced design alternative

A combination (or variation) of one or more *design alternatives* and *design features*.

environment

(1) Includes water; air; land; and all plants, humans, and other animals living therein, and the interrelationships existing among them. (2) The sum of all external conditions affecting the life, development, and survival of an organism.

environmental impact statement (EIS)

A detailed written statement to support a decision to proceed with a major Federal action affecting the quality of the human *environment*. This is required by the *National Environmental Policy Act, as amended*. Preparation of an EIS requires a public process that includes public meetings, reviews, and comments, as well as agency responses to the public comments.

environmental resource areas

Areas examined for potential environmental impacts as part of the *National Environmental Policy Act* analysis process. Examples include air quality, hydrology, and biological resources.

fault

(1) A fracture in rock along which movement of one side relative to the other has occurred. (2) A fracture or a fracture zone in crustal rocks along which there has been movement of the fracture's two sides relative to one another, so that what were once parts of one continuous rock stratum or vein are now separated.

fuel assembly

A number of fuel rods held together by plates and separated by spacers, used in a *nuclear reactor*. Sometimes called a fuel bundle.

fuel blending

The process of loading low-heat-output waste with high-heat-output waste in a *waste package* to balance its total heat output. This process would apply only to *commercial spent nuclear fuel*.

fugitive dust

Particulate matter composed of soil that can include emissions from haul roads, wind erosion of exposed soil surfaces, and other activities in which soil is removed or redistributed.

geologic

Of or related to a natural process acting as a dynamic physical force on the Earth (faulting, erosion, mountain building resulting in rock formations, etc.).

geologic repository

A system for disposing of *radioactive* waste in excavated *geologic* media, including surface and *subsurface* areas of operation, and the adjacent part of the geologic setting that provides isolation of the radioactive waste in the controlled area.

ground support

The system (rock bolt with wire mesh, steel cast, etc.) that would be used to line the main and *emplacement drifts* to minimize rock or soils falling into the drifts.

groundwater

Water contained in pores or fractures in either the *unsaturated zone* or *saturated zone* below ground level.

hazardous waste

Waste designated as hazardous by Environmental Protection Agency or State of Nevada regulations. Hazardous waste, defined under the Resource Conservation and Recovery Act, as amended (42 USC 6901 *et seq.*), is waste that poses a potential hazard to human health or the environment when improperly treated, stored, or disposed of. Hazardous wastes appear on special Environmental Protection Agency lists or possess at least one of the following characteristics: ignitability, corrosivity, toxicity, or reactivity. Hazardous waste streams from the repository could include certain used rags and wipes contaminated with solvents. (Note: The proposed Yucca Mountain Repository would not accept hazardous waste, either solid or liquid.)

heavy metal

All uranium, plutonium, and thorium used in a manmade *nuclear reactor*.

higher-temperature repository operating mode

The S&ER flexible design would maintain the repository host rock temperatures below the boiling point of water [96°C (205°F) at the elevation of the repository] during the preclosure period with continuous ventilation of the *emplacement drifts*. After mechanical ventilation was discontinued at closure, host rock temperatures would increase above the boiling point of water, and moisture around the emplacement drifts would evaporate and be driven away from the drifts as water vapor. A boiling zone would develop around each emplacement drift, but it would not extend all the way across the *pillars*. This higher-temperature repository operating mode would

allow percolation of moisture downward past the *emplacement horizon* through central portions of the rock pillars between the drifts. See *lower-temperature repository operating mode.*

high-level radioactive waste

(1) The highly *radioactive* material that resulted from the reprocessing of *spent nuclear fuel*, including liquid waste produced directly in reprocessing, and any solid material derived from such liquid waste that contains fission products in sufficient concentrations. (Note: DOE would vitrify liquid high-level radioactive waste before shipping it to the repository.) (2) Other highly radioactive material that the Nuclear Regulatory Commission, consistent with existing law, determines by rule requires permanent isolation.

impact

For an EIS, the positive or negative effect of an action (past, present, or future) on the natural *environment* (land use, air quality, water resources, geological resources, ecological resources, aesthetic and scenic resources) and the human environment (infrastructure, economics, social, and cultural).

impact limiters

Devices attached to the *waste package* transporter that would help absorb impact energy in the event of a collision. The railcars and trucks that would transport spent nuclear fuel and high-level radioactive waste to the repository site would also have impact limiters.

infiltration

The process of water entering the soil at the ground surface and the ensuing movement downward. Infiltration becomes percolation when water has moved below the depth at which it can be removed (to return to the atmosphere) by evaporation or evapotranspiration.

invert

The structure constructed in a *drift* to provide the floor of that drift. In an *emplacement* drift, ballast in the invert would serve as a *barrier* to migration of radionuclides that escaped from breached *waste packages*.

License Application

An application to the Nuclear Regulatory Commission to construct a *geologic repository* for the disposal of *spent nuclear fuel* and *high-level radioactive waste*. The application would be considered by the Nuclear Regulatory Commission in any decision whether to grant DOE authorization to begin constructing a repository.

line-loading repository design

A waste *emplacement* design in which *waste packages* would be spaced very closely along the *drift*.

linear thermal load

Heat output per unit length of the emplacement drift; expressed in kilowatts per meter.

lower-temperature repository operating mode

The S&ER flexible design would have the ability to hold repository host rock temperatures below the boiling point of water [96°C (205°F) at the elevation of the repository] after closure by a combination of methods such as increasing the continuous ventilation period, aging the fuel prior to *emplacement*, and increasing the spacing between emplaced waste packages. The lower-temperature repository operating mode ranges include conditions under which the drift rock wall

temperatures would be below the boiling point of water, and conditions under which the waste package surface temperature would not exceed 85ºC (185ºF). To bound the impact analysis, DOE considered conditions under which the rock wall temperatures would be above the boiling point of water, and conditions under which waste package surface temperatures would not exceed 85ºC. See *higher-temperature repository operating mode*.

maintenance

Activities during the repository operation and monitoring phase including maintenance of *subsurface* monitoring and instrumentation systems and utilities (compressed air, water supply, fire water, wastewater system, power supply, and lights), maintenance of the main ventilation fan installations and surface facilities related to underground activities, and site security. Maintenance also preserves the capability to retrieve emplaced *waste packages*. See *repository phases*.

maximally exposed individual

A hypothetical individual whose location and habits result in the highest total radiological or chemical exposure (and thus *dose*) from a particular source for all exposure routes (for example, inhalation, ingestion, direct exposure). The EIS analyses used the concept of the maximally exposed individual to evaluate potential short-term impacts to individuals around the repository and from transportation (and for some aspects of the No-Action Alternative). For potential impacts to individuals from long-term repository performance, see *receptor*.

maximum reasonably foreseeable accident

An accident characterized by extremes of mechanical (impact) forces, heat (fire), and other conditions that would lead to the highest foreseeable consequences. In general, accidents with conditions that have a chance of occurring more often than 1 in 10 million in a year are considered to be reasonably foreseeable.

metric tons of heavy metal (MTHM)

Quantities of *spent nuclear fuel* without the inclusion of other materials such as *cladding* (the tubes containing the fuel) and structural materials. A metric ton is 1,000 kilograms (1.1 tons or 2,200 pounds). Uranium and other metals in *spent nuclear fuel* (such as thorium and plutonium) are called *heavy metals* because they are extremely dense; that is, they have high weights per unit volume.

monitoring

Activities during the repository operation and monitoring phase including the surveillance and testing of *waste packages* and the repository for *performance confirmation*. See *repository phases*.

National Environmental Policy Act, as amended (NEPA; 42 USC 4321 *et seq.*)

The Federal statute that is the national charter for protection of the *environment*. The Act is implemented by procedures issued by the Council on Environmental Quality and DOE.

natural barrier

The physical components of the geologic *environment* that individually and collectively act to limit the movement of water or radionuclides. See *barrier*.

natural ventilation

Ventilation that results from a naturally occurring pressure differential common in underground mines, caused by a difference in density between the air columns in the intake and exhaust shafts

or ramps. The density difference is generally caused by a difference in air temperature between the two openings. In relation to this EIS, the repository would be unique in that, due to the heat output of the emplaced waste, the exhaust air temperature would virtually always be higher than the intake temperature. The heat supplied by the waste and the difference in elevation between the intake and exhaust shaft portals would mean that there would always be a pressure differential, and that it would always be positive (that is, it would induce flow from the intakes to the exhausts).

naval spent nuclear fuel

Spent nuclear fuel discharged from reactors in surface ships, submarines, and training reactors operated by the U.S. Navy.

neutron absorber

A material (such as boron or gadolinium) that absorbs neutrons. Used in *nuclear reactors*, transportation casks, and *waste packages* to control neutron activity.

nuclear reactor

A device in which a nuclear fission chain reaction can be initiated, sustained, and controlled to generate heat or to produce useful radiation.

Nuclear Waste Policy Act, as amended (NWPA; 42 USC 10101 *et seq.*)

The Federal statute enacted in 1982 (Public Law 97-425, 96 Stat. 2201) that established the DOE Office of Civilian Radioactive Waste Management and defined its mission to develop a Federal system for the management and geologic disposal of *commercial spent nuclear fuel* and other *high-level radioactive wastes*, as appropriate. The NWPA specifies other Federal responsibilities for nuclear waste management, established the Nuclear Waste Fund to cover the cost of geologic disposal, authorized interim storage under certain circumstances, and defined interactions between Federal agencies and the states, local governments, and Native American tribes. The Nuclear Waste Policy Act of 1982 was substantially amended in 1987 [Nuclear Waste Policy Amendments Act of 1987 (Public Law 100-203, 101 Stat. 1330)] and 1992 [Energy Policy Act of 1992 (Public Law 102-486, 106 Stat. 2776)].

operation and monitoring

See *repository phases.*

peak of the mean annual dose (post-10,000 years)

For this Supplement, the maximum of the mean annual *dose* analyzed for the 1-million-year postclosure period. Because the dose would decline after this peak, this would be the peak for all time after closure. See *10,000-year peak of the mean annual dose.*

perennial yield

The amount of usable water from a *groundwater* aquifer that can be economically withdrawn and consumed each year for an indefinite period. It cannot exceed the natural recharge to that aquifer and ultimately is limited to the maximum amount of discharge that can be used for beneficial use.

performance confirmation

The program of tests, experiments, and analyses conducted to evaluate the accuracy and adequacy of the information used to determine with reasonable assurance that the performance objectives for the period after *permanent closure* will be met.

permanent closure
Final sealing of *shafts* and *boreholes* of the underground facility.

photovoltaic
Capable of generating a voltage as a result of exposure to radiation. Solar power generation systems use photovoltaic energy from the sun's radiation to produce electricity.

pillar
The rock wall between adjacent *emplacement drifts*.

PM_{10}
All particulate matter in the air with an aerodynamic diameter less than or equal to a nominal 10 micrometers (0.0004 inch). Particles less than this diameter are small enough to be breathable and could be deposited in lungs.

portal
Surface entrance to a mine, particularly in a *drift* or tunnel. The North and South Portals are the two primary entrances to the *subsurface* facilities of the proposed Yucca Mountain Repository.

pressurized-water reactor
A nuclear power *reactor* that uses water under pressure as a coolant. The water boiled to generate steam is in a separate system.

primary impact indicators
The most important contributions or parameters used to determine the impacts to a particular *environmental resource area*.

proposed action
The activity proposed to meet the purpose and need for agency action. An EIS analyzes the environmental *impacts* of a proposed action. A proposed action includes the project and its related support activities (preconstruction, construction, and operation, along with postoperational requirements). The Proposed Action in this EIS is the construction, operation and monitoring, and eventual closure of a *geologic repository* for *spent nuclear fuel* and *high-level radioactive waste* at Yucca Mountain in Nevada (see *repository phases*).

radioactive
Emitting radioactivity.

reactor
See *nuclear reactor*.

receptor
A hypothetical person who is exposed to environmental contaminants (in this case radionuclides) in such a way—by a combination of factors including location, lifestyle, dietary habits, etc.—that this individual is representative of the exposure of the general population. DOE used this hypothetical individual to evaluate long-term repository performance. The receptor represents the "Reasonably Maximally Exposed Individual (RMEI)" defined in proposed 40 CFR Part 197 (64 *FR* 46976, August 27, 1999) or the "Average Member of the Critical Group" in proposed 10 CFR Part 63 (64 *FR* 8640, February 22, 1999). The Draft EIS defined the receptor slightly differently and called this hypothetical person the *maximally exposed individual,* which is still used for evaluating short-term impacts.

repository block

The portion of rock in Yucca Mountain that would house the repository, if the site is found suitable.

repository horizon

The area within the *repository block* where *emplacement drifts* would be excavated. Also called emplacement horizon.

repository phases

The development of a monitored geologic repository at Yucca Mountain, if approved, would have three phases, as follows:

- *Construction:* Activities during this phase would include preparing the site, constructing surface waste handling and support facilities, excavating and equipping a portion of the repository *subsurface* for initial waste *emplacement*, and conducting initial verification testing of components and systems.

- *Operation and monitoring:* Repository operations activities would include waste receipt, repackaging, and *emplacement* in the repository; continuing subsurface development for waste emplacement*; monitoring;* and *maintenance*. Monitoring would begin with the initial emplacement of waste in the repository and would end at repository *closure*. In addition, the maintenance of repository facilities would continue until the closure of the repository. See *monitoring*, *maintenance*.

- *Closure:* The closure of the *subsurface* repository facilities would include the removal and salvage of equipment and materials; filling of the main *drifts*, access ramps, and ventilation *shafts*; and sealing of openings, including ventilation shafts, access ramps, and *boreholes*. Surface closure activities would include the construction of monuments to mark the repository location, decommissioning and demolition of facilities, and restoration of the site to its approximate condition before the construction of the repository facilities.

S&ER flexible design

As used in this Supplement, the repository design and operating modes presented in the *Yucca Mountain Science and Engineering Report: Technical Information Supporting Site Recommendation Consideration.* See *higher-temperature repository operating mode* and *lower-temperature repository operating mode.*

saturated zone

The region below the *water table* where rock pores and fractures are completely saturated with water.

shaft

For the Yucca Mountain Repository, an excavation or vertical passage of limited area, compared to its depth, used to ventilate underground facilities.

shielding

Any material that provides radiation protection.

Site Recommendation

A recommendation by the Secretary of Energy to the President that the Yucca Mountain site be approved for development as the Nation's first *spent nuclear fuel* and *high-level radioactive*

waste repository. If the site is determined to be suitable, this recommendation is expected in Fiscal Year 2001.

spent nuclear fuel

Fuel that has been withdrawn from a *nuclear reactor* following irradiation, the component elements of which have not been separated by reprocessing. For this project, this refers to (1) intact, nondefective *fuel assemblies*, (2) failed fuel assemblies in canisters, (3) fuel assemblies in canisters, (4) consolidated fuel rods in canisters, (5) nonfuel-assembly hardware inserted in *pressurized-water reactor* fuel assemblies, (6) fuel channels attached to *boiling-water reactor* fuel assemblies, and (7) nonfuel-assembly hardware and structural parts of assemblies resulting from consolidation in canisters.

subsurface

A zone below the surface of the Earth, the *geologic* features of which are principally layers of rock that have been tilted or *faulted* and are interpreted on the basis of drill hole records and geophysical (seismic or rock vibration) evidence. In general, it is all rock and solid materials lying beneath the Earth's surface.

thermal loading

(1) The spatial density at which *waste packages* would be emplaced within the repository as characterized by the areal power density and the *areal mass loading*. (2) The application of heat to a system, usually measured in terms of watts per unit area. The thermal load for a repository would be the watts per acre produced by the *radioactive* waste in the active disposal area.

thermal shunt

Usually aluminum metal structure that would be added to *waste packages* as needed to greatly improve heat conduction between the center of the waste package and the outer edge, thereby providing a reliable means to keep temperature of the *cladding* within design limits.

Total System Performance Assessment

A risk assessment that quantitatively estimates how the proposed Yucca Mountain Repository system would perform under the influence of specific features, events, and processes, incorporating *uncertainty* in the models and data.

trunnion

A cylindrical projection used for lifting.

tuff

Igneous rock formed from compacted volcanic fragments from pyroclastic (explosively ejected) flows with particles generally smaller than 4 millimeters (about 0.16 inch) in diameter—the most abundant type of rock at the Yucca Mountain site. Nonwelded tuff results when volcanic ash cools in the air sufficiently that it doesn't melt together, yet later becomes rock through compression. See *welded tuff*.

uncanistered spent nuclear fuel

Fuel placed directly into storage containers or shipping casks without first being placed in a canister.

uncertainty

A measure of how much a calculated or estimated value that is used as a reasonable guess or prediction might vary from the unknown true value.

unsaturated zone

The zone of soil or rock below the ground surface and above the *water table*.

Viability Assessment

An assessment of the prospects for geologic disposal at the Yucca Mountain site, based on repository and *waste package* design, a *Total System Performance Assessment*, a *License Application* plan, and repository cost and schedule estimates. DOE issued the *Viability Assessment of a Repository at Yucca Mountain* in December 1998.

waste form

A generic term that refers to the different types of *radioactive* wastes.

waste package

A sealed container containing waste that is ready for emplacement. The waste package would contain the *waste form* and any containers, spacing structure or baskets, and other absorbent materials immediately surrounding an individual waste container placed internally to the container or attached to the outer surface of the *disposal container*.

water table

(1) The upper limit of the *saturated zone* (the portion of the ground wholly saturated with water). (2) The upper surface of a zone of saturation above which the majority of pore spaces and fractures are less than 100 percent saturated with water most of the time (*unsaturated zone*) and below which the opposite is true (saturated zone).

welded tuff

A *tuff* deposited under conditions where the particles making up the rock were heated sufficiently to cohere. In contrast to nonwelded tuff, welded tuff is denser, less porous, and more likely to be fractured.

Appendix C

Preparers and Contributors

APPENDIX C. PREPARERS, CONTRIBUTORS, AND REVIEWERS

C.1 Preparers and Contributors

This appendix lists the individuals who filled primary roles in the preparation of this *Supplement to the Draft Environmental Impact Statement for a Geologic Repository for the Disposal of Spent Nuclear Fuel and High-Level Radioactive Waste at Yucca Mountain, Nye County, Nevada*. As Document Manager, Kenneth J. Skipper of the U.S. Department of Energy (DOE) Yucca Mountain Site Characterization Office directed the preparation of the Supplement until March 2001; Jane R. Summerson of DOE is the current Document Manager. Wendy R. Dixon, Robin L. Sweeney, and Joseph D. Ziegler of DOE served as advisors to Supplement preparation. Primary support and assistance to DOE was provided by the Supplement Preparation Team, led by Joseph W. Rivers, Jr., of Jason Technologies Corporation; other members of the team included Tetra Tech NUS Inc., Dade Moeller & Associates, and Batelle Memorial Institute.

Judith A. Shipman coordinated the work of the Jason Technologies Corporation production team (Elisa Aguilar, Dalene Glanz, Laura Hall, Virginia Hutchins, and Robin Klein). Glenn Caprio, Marcy Gershin, Cynthia Langdale, Angelica Marquez, Barbara Rhoads, and Dawn Siekerman provided scheduling and recordkeeping support.

DOE provided direction to the Supplement Preparation Team, which was responsible for developing the analytical methodology and alternatives, coordinating the work tasks, performing the impact analyses, and producing the document. DOE was responsible for data quality, the scope and content of the Supplement, and issue resolution and direction.

In addition, the Management and Operating Contractor to the Civilian Radioactive Waste Management System (TRW Environmental Safety Systems Inc., Bechtel-SAIC Corporation, and their subcontractors) under the direction of the DOE Yucca Mountain Site Characterization Office assisted in the preparation of supporting documentation and information for the Supplement. These organizations worked closely with the Supplement Preparation Team under DOE direction.

DOE independently evaluated all supporting information and documentation prepared by these organizations. Further, DOE retained the responsibility for determining the appropriateness and adequacy of incorporating any data, analyses, and results of other work performed by these organizations in the Supplement. The Supplement Preparation Team was responsible for integrating such work into the document.

As required by Federal regulations (40 CFR 1506.5c), Jason Technologies Corporation and its subcontractors have signed National Environmental Policy Act (NEPA) Disclosure Statements in relation to the work they performed on this Supplement. These statements appear at the end of this appendix.

Name	Education	Experience	Responsibility
U.S. Department of Energy			
Kenneth J. Skipper	B.S., Geology, 1984	19 years – geotechnical/ environmental project management; Federal civil works projects; planning, construction, operations, and performance monitoring	Document Manager until March 2001

Name	Education	Experience	Responsibility
Jane R. Summerson	Ph.D., Geology, 1991 M.S., Geobiology, 1985 M.A., Anthropology, 1978 B.A., Anthropology, 1977	11 years – waste management projects with the DOE Office of Civilian Radioactive Waste Management	Document Manager
Wendy R. Dixon	Postgraduate studies, Geology and Environmental Science M.B.A., Business B.A., Sociology	21 years – management of nuclear-related projects; 14 years – regulatory compliance and field management; 6 years – safety and health	Senior Advisor for Environmental Policy
Robin L. Sweeney	Ph.D. student, Environmental Science and Public Policy M.S., Geosciences, 1987 B.S., Biological Sciences, 1980	22 years – hazardous and nuclear waste field; waste management, RCRA/CERCLA[a] facility assessments, sampling and monitoring, project/program management, laboratory research	Senior Technical Specialist; NEPA Compliance Officer
Joseph D. Ziegler	B.S., Engineering (Nuclear), 1975	25 years – nuclear engineering, nuclear safety, environmental assessment, and project management; Federal and commercial nuclear projects	Senior Technical Advisor
Supplement Preparation Team			
Joseph W. Rivers, Jr. Jason Technologies Corporation	B.S., Mechanical Engineering, 1982	17 years – commercial and DOE nuclear projects; design, systems engineering, safety analysis, and regulatory compliance	Project Manager
David R. Wayman Jason Technologies Corporation	M.B.A., Business Administration, 1988 B.S., Construction Technology, 1980	19 years – commercial and DOE projects; construction engineering, nuclear safety analysis, environment compliance and permitting	Deputy Project Manager
Diane E. Morton Jason Technologies Corporation	B.S., Chemical Engineering, 1979	20 years – DOE nuclear and environmental projects; project/program management, assessments, planning	Document Manager

Name	Education	Experience	Responsibility
John O. Shipman Jason Technologies Corporation	B.A., English Literature, 1966	33 years – NEPA documentation, technical writing and editing, publications management; 10 years – public participation	Document Production Manager, Editor
David Crowl Jason Technologies Corporation	B.A., Computer Science, 1985	16 years – editing and document production	Editor
Keith D. Davis, PE Jason Technologies Corporation	M.S., Civil and Environmental Engineering, 1976 B.S., Civil Engineering, 1973	25 years – civil and environmental engineering; waste management; facility permitting and closure; site investigations, feasibility studies, and remedial action planning; 6 years – NEPA documentation	Hydrology; soils
Peter R. Davis Jason Technologies Corporation	Oak Ridge School of Reactor Technology, 1962 B.S. Physics, 1961	37 years – nuclear reactor and nuclear facility safety analysis and risk assessment	Accidents
Sara A. Doersam Jason Technologies Corporation	B.A., Psychology, 1982	2 years – technical editing; 6 years – newspaper publishing and editing; 14 years – health administration	Editor
Mary N. Hoganson Tetra Tech NUS Inc.	M.S., Biology, 1989 B.S., Biology, 1984	14 years – waste management and waste minimization; 6 years – NEPA document preparation	Waste management and hazardous materials
Richard H. Holder Jason Technologies Corporation	M.B.A., Business Administration, 1986 M.S., Electrical Engineering, 1970 B.S., Electrical Engineering, 1966	33 years – team and line management for nuclear utility, industrial, and overseas projects	Proposed Action and alternatives
R. Kingsley House, PE Jason Technologies Corporation	M.S., Engineering Science/Nuclear Option, 1963 B.S., Mechanical Engineering, 1960 Nevada Registration No. 13062, 1997	40 years – nuclear and non-nuclear facility design, construction, testing, and operation; hazards analysis, safety analysis, and environmental impact analysis	Utilities, energy, materials, and site services; offsite manufacturing of disposal containers, shipping casks, drip shields, waste package supports, and related components

Name	Education	Experience	Responsibility
Tracy A. Ikenberry, CHP Dade Moeller & Associates	M.S., Radiology & Radiation Biology, 1982 B.A., Biology, 1979	17 years – environmental and occupational radiation protection; 6 years – NEPA document management and technical analysis	Air quality; health and safety
David H. Lester Jason Technologies Corporation	Ph.D., Chemical Engineering, 1969 M.S., Chemical Engineering, 1966 B.Che., Chemical Engineering, 1964	27 years – hazardous and nuclear waste management; nuclear Safety Analysis Reports, hazards analysis of waste storage operations, risk assessment of low-level nuclear waste burial operations, groundwater contamination transport modeling, performance assessment of high-level nuclear waste systems, design of treatment systems, design and analysis of high-level waste packages, and soil remediation studies	Long-term performance
Donna L. Osborne Jason Technologies Corporation	20 years experience	20 years – technical editing, document production and coordination; 1 year – NEPA documentation	Editor
Judith A. Shipman Jason Technologies Corporation	A.A., General Studies, 1991	25 years – NEPA documentation, document production coordination, editing	Editor
Ruth Weiner Jason Technologies Corporation	Ph.D., Chemistry, 1962 M.S., Physics, 1957 B.S., Physics, 1956	14 years – risk assessment of airborne pollutants and transportation risks; 25 years – environmental impact assessment; 26 years – professor of chemistry and environmental studies; radioactive waste disposal	Transportation risk
Dee H. Walker Jason Technologies Corporation	Ph.D., Chemical Engineering, 1963 M.S., Chemical Engineering, 1962 Oak Ridge School of Reactor Technology, 1954 B.S., Chemical Engineering, 1953	46 years – nuclear engineering; 11 years – effects of radiological releases on humans and the environment	Health and safety

a. RCRA/CERCLA = Resource Conservation and Recovery Act/Comprehensive Environmental Response, Compensation, and Liability Act.

C.2 Reviewers

The DOE Yucca Mountain Site Characterization Office incorporated input to the preparation of this Supplement from a number of other DOE offices that reviewed the document while it was under development. These included the Offices of Environmental Management, Naval Reactors, Nuclear Energy, Materials Disposition, the National Spent Fuel Program, and the National High-Level Waste Program. The DOE Yucca Mountain Site Characterization Office and Nevada Operations Office also participated in the reviews of this Supplement. In addition, personnel from the DOE Office of Civilian Radioactive Waste Management Technical Support Services Contractor (Booz-Allen & Hamilton and its subcontractors) provided technical review and other support.

QUALIFICATION CRITERION NO. 1

NEPA DISCLOSURE STATEMENT FOR
PREPARATION OF THE
ENVIRONMENTAL IMPACT STATEMENT FOR A GEOLOGIC REPOSITORY FOR THE DISPOSAL OF SPENT NUCLEAR FUEL AND HIGH-LEVEL RADIOACTIVE WASTE AT YUCCA MOUNTAIN, NYE COUNTY, NEVADA

CEQ Regulations at 40 CFR 1506.5(c), which have been adopted by the DOE (10 CFR 1021), require contractors who will prepare and EIS to execute a disclosure specifying that they have no financial or other interest in the outcome of the project. The term "financial interest or other interest in the outcome of the project" for purpose of this disclosure is defined in the March 23, 1981, guidance "Forty Most Asked Questions Concerning CEQ's National Environmental Policy Act Regulations", 46 FR 18026-18038 at Question 17a and b.

"Financial or other interest in the outcome of the project" includes "any financial benefit such as a promise of future construction or design work in the project, as well as indirect benefits the contractor is aware of (e.g., if the project would aid proposals sponsored by the firm's other clients)". See 46 FR 18026-18031.

In accordance with these requirements, the offeror and the proposed subcontractors hereby certify as follows. (check either (a) or (b) and list financial or other interest if (b) is checked)

(a) ☑ Contractor has no financial or other interest in the outcome of the project.

(b) ☐ Offeror and any proposed subcontractor have the following financial or other interest in the outcome of the project and hereby agree to divest themselves of such interest prior to award of this contract.

Financial or Other Interest

1.

2.

3.

Certified By:

Signature

James S. Holm

Name (Printed)

Director of Contracts

Title

Jason Associates Corporation

Company

June 7, 1999

Date

QUALIFICATION CRITERION NO. 1

NEPA DISCLOSURE STATEMENT FOR
PREPARATION OF THE
ENVIRONMENTAL IMPACT STATEMENT FOR A GEOLOGIC REPOSITORY FOR THE DISPOSAL OF SPENT NUCLEAR FUEL AND HIGH-LEVEL RADIOACTIVE WASTE AT YUCCA MOUNTAIN, NYE COUNTY, NEVADA

CEQ Regulations at 40 CFR 1506.5(c), which have been adopted by the DOE (10 CFR 1021), require contractors who will prepare and EIS to execute a disclosure specifying that they have no financial or other interest in the outcome of the project. The term "financial interest or other interest in the outcome of the project" for purpose of this disclosure is defined in the March 23, 1981, guidance "Forty Most Asked Questions Concerning CEQ's National Environmental Policy Act Regulations", 46 FR 18026-18038 at Question 17a and b.

"Financial or other interest in the outcome of the project" includes "any financial benefit such as a promise of future construction or design work in the project, as well as indirect benefits the contractor is aware of (e.g., if the project would aid proposals sponsored by the firm's other clients)". See 46 FR 18026-18031.

In accordance with these requirements, the offeror and the proposed subcontractors hereby certify as follows. (check either (a) or (b) and list financial or other interest if (b) is checked)

(a) ☒ Contractor has no financial or other interest in the outcome of the project.

(b) ☐ Offeror and any proposed subcontractor have the following financial or other interest in the outcome of the project and hereby agree to divest themselves of such interest prior to award of this contract.

Financial or Other Interest

1.

2.

3.

Certified By:

Signature

RALPH K. HENRICKS
Name (Printed)

CONTRACTING OFFICER
Title

BATTELLE MEMORIAL INSTITUTE
COLUMBUS OPERATIONS
Company

June 7, 1999
Date

QUALIFICATION CRITERION NO. 1

NEPA DISCLOSURE STATEMENT FOR PREPARATION OF THE ENVIRONMENTAL IMPACT STATEMENT FOR A GEOLOGIC REPOSITORY FOR THE DISPOSAL OF SPENT NUCLEAR FUEL AND HIGH-LEVEL RADIOACTIVE WASTE AT YUCCA MOUNTAIN, NYE COUNTY, NEVADA

CEQ Regulations at 40 CFR 1506.5c, which have been adopted by the DOE (10 CFR 1021), require contractors who will prepare an EIS to execute a disclosure specifying that they have no financial or other interest in the outcome of the project. The term "financial interest or other interest in the outcome of the project" for purposes of this disclosure is defined in the March 23, 1981, guidance "Forty Most Asked Questions Concerning CEQ's National Environmental Policy Act Regulations", 46 FR 18026-18038 at Question 17a and b.

"Financial or other interest in the outcome of the project" includes "any financial benefit such as a promise of future construction or design work in the project, as well as indirect benefits the contractor is aware of (e.g., if the project would aid proposals sponsored by the firm's other clients)". See 46 FR 18026-18031.

In accordance with these requirements, the offeror and the proposed subcontractors hereby certify as follows: (check either (a) or (b) and list financial or other interest if (b) is checked).

(a) ☑ Contractor has no financial or other interest in the outcome of the project.

(b) ☐ Offeror and any proposed subcontractor have the following financial or other interest in the outcome of the project and hereby agree to divest themselves of such interest prior to award of this contract.

Financial or Other Interest

1.

2.

3.

Certified by:

Signature

Janet M. Mandel
Name (Printed)

Manager, Contract Operations
Title

Tetra Tech NUS, Inc.
Company

June 4, 1999
Date

QUALIFICATION CRITERION NO. 1

NEPA DISCLOSURE STATEMENT FOR
PREPARATION OF THE
ENVIRONMENTAL IMPACT STATEMENT FOR A GEOLOGIC REPOSITORY FOR THE DISPOSAL OF SPENT NUCLEAR FUEL AND HIGH-LEVEL RADIOACTIVE WASTE AT YUCCA MOUNTAIN, NYE COUNTY, NEVADA

CEQ Regulations at 40 CFR 1506.5(c), which have been adopted by the DOE (10 CFR 1021), require contractors who will prepare and EIS to execute a disclosure specifying that they have no financial or other interest in the outcome of the project. The term "financial interest or other interest in the outcome of the project" for purpose of this disclosure is defined in the March 23, 1981, guidance "Forty Most Asked Questions Concerning CEQ's National Environmental Policy Act Regulations", 46 FR 18026-18038 at Question 17a and b.

"Financial or other interest in the outcome of the project" includes "any financial benefit such as a promise of future construction or design work in the project, as well as indirect benefits the contractor is aware of (e.g., if the project would aid proposals sponsored by the firm's other clients)". See 46 FR 18026-18031.

In accordance with these requirements, the offeror and the proposed subcontractors hereby certify as follows. (check either (a) or (b) and list financial or other interest if (b) is checked)

(a) ☒ Contractor has no financial or other interest in the outcome of the project.

(b) ☐ Offeror and any proposed subcontractor have the following financial or other interest in the outcome of the project and hereby agree to divest themselves of such interest prior to award of this contract.

Financial or Other Interest

1.

2.

3.

Certified By:

Signature

Matthew P. Moeller
Name (Printed)

Vice President
Title

Dade Moeller & Assoc.
Company

June 4, 1999
Date

Appendix D

Distribution List

APPENDIX D. DISTRIBUTION LIST

The U.S. Department of Energy (DOE) is providing copies of this Supplement to Federal, state, and local elected and appointed officials and agencies of government; Native American groups; national, state, and local environmental and public interest groups; and other organizations and individuals listed below. In addition, DOE is sending copies of the Supplement to all persons who commented on the *Draft Environmental Impact Statement for a Geologic Repository for the Disposal of Spent Nuclear Fuel and High-Level Radioactive Waste at Yucca Mountain, Nye County, Nevada*. DOE will provide copies to other interested organizations or individuals on request.

D.1 United States Congress

D.1.1 UNITED STATES SENATORS FROM NEVADA

The Honorable Harry Reid
United States Senate

The Honorable John Ensign
United States Senate

D.1.2 UNITED STATES SENATE COMMITTEES

The Honorable Pete V. Domenici
Chairman
Subcommittee on Energy and Water Development
Committee on Appropriations

The Honorable Harry Reid
Ranking Member
Subcommittee on Energy and Water Development
Committee on Appropriations

The Honorable John Warner
Chairman
Committee on Armed Services

The Honorable Carl Levin
Ranking Member
Committee on Armed Services

The Honorable Frank H. Murkowski
Chairman
Committee on Energy and Natural Resources

The Honorable Jeff Bingaman
Ranking Member
Committee on Energy and Natural Resources

The Honorable Ted Stevens
Chairman
Committee on Appropriations

The Honorable Robert Byrd
Ranking Member
Committee on Appropriations

The Honorable Robert Smith
Chairman
Committee on Environment and Public Works

The Honorable Harry Reid
Ranking Member
Committee on Environment and Public Works

D.1.3 UNITED STATES REPRESENTATIVES FROM NEVADA

The Honorable Jim Gibbons
United States House of Representatives

The Honorable Shelley Berkley
United States House of Representatives

D.1.4 UNITED STATES HOUSE OF REPRESENTATIVES COMMITTEES

The Honorable Sonny Callahan
Chairman
Subcommittee on Energy and Water Development
Committee on Appropriations

The Honorable Bob Stump
Chairman
Committee on Armed Services

The Honorable W. J. "Billy" Tauzin
Chairman
Committee on Energy and Commerce

The Honorable Joe Barton
Chairman
Subcommittee on Energy and Air Quality
Committee on Energy and Commerce

The Honorable James V. Hansen
Chairman
Committee on Resources

The Honorable Don Young
Chairman
Committee on Transportation and Infrastructure

The Honorable Peter J. Visclosky
Ranking Minority Member
Subcommittee on Energy and Water Development
Committee on Appropriations

The Honorable Ike Skelton
Ranking Minority Member
Committee on Armed Services

The Honorable John D. Dingell
Ranking Minority Member
Committee on Energy and Commerce

The Honorable Rick Boucher
Ranking Minority Member
Subcommittee on Energy and Air Quality
Committee on Energy and Commerce

The Honorable Nick J. Rahall II
Ranking Minority Member
Committee on Resources

The Honorable James L. Oberstar
Ranking Minority Member
Committee on Transportation and Infrastructure

D.2 Federal Agencies

Mr. Andrew Thibadeau
Director, Division of Information Technology and Security
Defense Nuclear Facilities Safety Board

Ms. Andree DuVarney
National Environmental Coordinator
Ecological Sciences Division
Natural Resources Conservation Service
U.S. Department of Agriculture

Dr. Frank Monteferrante
Director, Compliance Review Division
Economic Development Administration
U.S. Department of Commerce

Mr. Rick Lemaire
Deputy for Environmental Planning, Education, and Training
Office of Environment, Safety and Occupational Health
Department of the Air Force
U.S. Department of Defense

Mr. Timothy P. Julius
Office of the Director of Environmental Programs
Office of the Assistant Chief of Staff for Installation Management
Department of the Army
U.S. Department of Defense

Ms. Kimberley DePaul
Head, Environmental Planning and NEPA Compliance Program
Office of Chief of Naval Operations/N456
Department of the Navy
U.S. Department of Defense

Mr. A. Forester Einarsen
NEPA Coordinator
Office of Environmental Policy, CECW-AR-E
U.S. Army Corps of Engineers
U.S. Department of Defense

Mr. James T. Melillo
Executive Director
Environmental Management Advisory Board
U.S. Department of Energy

Mr. Willie R. Taylor
Director
Office of Environmental Policy and Compliance
U.S. Department of the Interior

Mr. Michael Soukup
Associate Director
Natural Resource Stewardship and Science
National Park Service
U.S. Department of the Interior

Mr. Jack Haugrud
Chief
General Litigation Section
Environment and Natural Resources Division
U.S. Department of Justice

Ms. Camille Mittleholtz
Environmental Team Leader
Office of Transportation Policy
U.S. Department of Transportation

Mr. Steve Grimm
Senior Program Analyst, RRP-24
Office of Policy and Program Development
Federal Railroad Administration
U.S. Department of Transportation

Dr. Robert A. McGuire, DHM2
Deputy Associate Administrator
Hazardous Materials Safety Research and Special Programs Administration
U.S. Department of Transportation

Ms. Susan Absher
Office of Federal Activities
NEPA Compliance Division
U.S. Environmental Protection Agency

Mr. Kenneth Czyscinski
Office of Radiation and Indoor Air
U.S. Environmental Protection Agency

Mr. David Huber
Office of Ground Water and Drinking Water
U.S. Environmental Protection Agency

Mr. Robert Barles
Office of Ground Water and Drinking Water
U.S. Environmental Protection Agency

Mr. Dennis O'Connor
Office of Radiation and Indoor Air
U.S. Environmental Protection Agency

Ms. Christine Todd Whitman
Administrator
U.S. Environmental Protection Agency

Ms. Elizabeth Higgins
Director, Office of Environmental Review
Regional Administrator's Office
Region 1
U.S. Environmental Protection Agency

Mr. Robert Hargrove
Chief, Strategic Planning and Multimedia Programs
Region 2
U.S. Environmental Protection Agency

Mr. John Forren
NEPA and Wetlands Coordinator
Region 3
U.S. Environmental Protection Agency

Mr. Heinz Mueller
Chief, Office of Environmental Assessment
Region 4
U.S. Environmental Protection Agency

Mr. Ken Westlake (B-19J)
NEPA Coordinator
Office of Strategic and Environmental Analysis
Region 5
U.S. Environmental Protection Agency

Mr. Michael P. Jansky
Regional Environmental Review Coordinator
Office of Planning and Coordination
Region 6
U.S. Environmental Protection Agency

Mr. Joe Cothern
NEPA Coordination Team Leader
Region 7
U.S. Environmental Protection Agency

Ms. Cindy Cody
Chief, NEPA Unit
Region 8
U.S. Environmental Protection Agency

Mr. David Tomsovic (CMD-2)
Region 9
U.S. Environmental Protection Agency

Mr. Richard B. Parkin (ECO-088)
Unit Manager, Geographic Implementation Unit
Office of Ecosystems and Communities
Region 10
U.S. Environmental Protection Agency

Mr. Mark Robinson
Director, Division of Environmental and Engineering Review
Federal Energy Regulatory Commission

Mr. Jim Wells
Director, Energy, Resources, and Science Issues
U.S. General Accounting Office

Mr. Lawrence Rudolph
General Counsel
National Science Foundation

The Honorable Richard A. Meserve
Chairman
U.S. Nuclear Regulatory Commission

The Honorable Nils J. Diaz
Commissioner
U.S. Nuclear Regulatory Commission

The Honorable Greta Joy Dicus
Commissioner
U.S. Nuclear Regulatory Commission

The Honorable Edward J. McGaffigan, Jr.
Commissioner
U.S. Nuclear Regulatory Commission

The Honorable Jeffrey S. Merrifield
Commissioner
U.S. Nuclear Regulatory Commission

Mr. C. William Reamer
Division of Waste Management
U.S. Nuclear Regulatory Commission

Mr. Keith McConnell
Assistant for Materials
U.S. Nuclear Regulatory Commission

Mr. Carl Paperiello
Deputy Executive Director for Materials, Research, and State Programs
U.S. Nuclear Regulatory Commission

Mr. David Brooks
Division of Waste Management
U.S. Nuclear Regulatory Commission

Mr. Thomas H. Essig
Chief, Environmental Performance and Assessment Branch
Division of Waste Management
U.S. Nuclear Regulatory Commission

Ms. Cynthia A. Carpenter
Branch Chief, Generic Issues, Environmental, Financial, and Rulemaking Branch
Office of Nuclear Reactor Regulation
U.S. Nuclear Regulatory Commission

Mr. Richard K. Major
Advisory Committee on Nuclear Waste
U.S. Nuclear Regulatory Commission

Dr. Janet Kotra
U.S. Nuclear Regulatory Commission

Mr. E. Neil Jensen
U.S. Nuclear Regulatory Commission

Ms. Charlotte Abrams
U.S. Nuclear Regulatory Commission

Mr. James R. Firth
U.S. Nuclear Regulatory Commission

Mr. Martin J. Virgilio
U.S. Nuclear Regulatory Commission

Mr. King Stablein
U.S. Nuclear Regulatory Commission

Mr. David B. Matthews
U.S. Nuclear Regulatory Commission

Mr. Donald P. Cleary
U.S. Nuclear Regulatory Commission

Ms. Susan F. Shankman
U.S. Nuclear Regulatory Commission

Mr. William Brach
U.S. Nuclear Regulatory Commission

Mr. Thomas Muir
Office of Science and Technology Policy
Environment Division
Executive Office of the President

Mr. Greg Askew
Senior Specialist, NEPA
Environmental Policy and Planning
Tennessee Valley Authority

Dr. Jared L. Cohon, P.E.
Chairman
U.S. Nuclear Waste Technical Review Board

Mr. John W. Arendt, P.E.
U.S. Nuclear Waste Technical Review Board

Dr. Daniel B. Bullen
U.S. Nuclear Waste Technical Review Board

Dr. Norman L. Christensen, Jr.
U.S. Nuclear Waste Technical Review Board

Dr. Paul P. Craig
U.S. Nuclear Waste Technical Review Board

Dr. Deborah S. Knopman
U.S. Nuclear Waste Technical Review Board

Dr. Priscilla P. Nelson
U.S. Nuclear Waste Technical Review Board

Dr. Richard Parizek
U.S. Nuclear Waste Technical Review Board

Dr. Donald Runnells
U.S. Nuclear Waste Technical Review Board

Dr. Alberto A. Sagüés, P.E.
U.S. Nuclear Waste Technical Review Board

Dr. Jeffrey Wong
U.S. Nuclear Waste Technical Review Board

Dr. William D. Barnard
Executive Director
U.S. Nuclear Waste Technical Review Board

Ms. Paula Alford
U.S. Nuclear Waste Technical Review Board

Mr. John N. Fischer
U.S. Geological Survey

Dr. Mitchell W. Reynolds
U.S. Geological Survey

Mr. James F. Devine
U.S. Geological Survey

Mr. Daniel J. Goode
U.S. Geological Survey

Mr. Barney Lewis
U.S. Geological Survey

Mr. Thomas O'Toole
Cadastral Surveyor
Bureau of Land Management
Bishop Field Station

Mr. Steve Addington
Field Office Manager
Bureau of Land Management
Bishop Field Station

Mr. Brian Amme
Division of Natural Resources, Lands, and
Planning
Bureau of Land Management
Nevada State Office

Mr. Mark T. Morse
Field Office Manager
Bureau of Land Management
Las Vegas Field Office

Ms. Helen M. Hankins
Field Office Manager
Bureau of Land Management
Elko Field Office

Mr. W. Craig MacKinnon
Field Station Manager
Bureau of Land Management
Tonopah Field Station

Mr. Gene A. Kolkman
Field Office Manager
Bureau of Land Management
Ely Field Office

Mr. George Meckfessel
Planning and Environmental Coordinator
Bureau of Land Management
Needles Field Office

Mr. John "Jack" S. Mills
Environmental Coordinator
Bureau of Land Management
California State Office

Mr. Timothy M. Read
Field Manager
Bureau of Land Management
Barstow Field Office

Mr. Ahmed Mohsen
Environmental Coordinator
Bureau of Land Management
Ridgecrest Field Office

Mr. Terry A. Reed
Field Office Manager
Bureau of Land Management
Winnemucca Field Office

Mr. John O. Singlaub
Field Office Manager
Bureau of Land Management
Carson City Field Office

Mr. Gerald M. Smith
Field Office Manager
Bureau of Land Management
Battle Mountain Field Office

Vacant
Field Station Manager
Bureau of Land Management
Caliente Field Station

Mr. Richard Martin
Superintendent
National Park Service
Death Valley National Park

Ms. Kathleen A. Carlson
Manager
U.S. Department of Energy
Nevada Operations Office

Ms. Beverly A. Cook
Manager
U.S. Department of Energy
Idaho Operations Office

Mr. Richard E. Glass
Manager
U.S. Department of Energy
Albuquerque Operations Office

Ms. G. Leah Dever
Manager
U.S. Department of Energy
Oak Ridge Operations Office

Mr. Keith A. Klein
Manager
U.S. Department of Energy
Richland Operations Office

Mr. Gregory P. Rudy
Manager
U.S. Department of Energy
Savannah River Operations Office

Mr. Marvin Gunn
Manager
U.S. Department of Energy
Chicago Operations Office

Mr. John Muhlestein
Stanford Site Office Director
U.S. Department of Energy

Mr. Richard H. Nolan
Berkeley Site Office
U.S. Department of Energy

Mr. Walter Warnick
Director
Office of Scientific and Technical Information
U.S. Department of Energy

Department of Energy Advisory Boards

Mr. Doug Sarno
Contractor Technical Liaison
c/o Fernald Citizens Advisory Board
Phoenix Environmental Corporation

Ms. Ruth Siguenza
SSAB Administrator
Hanford Site Advisory Board
c/o EnviroIssues

Ms. Wendy Green Lowe
SSAB Administrator
Idaho National Engineering and Environmental Laboratory Citizens Advisory Board
c/o Jason Associates Corporation

Ms. Ann Dubois
SSAB Administrator
Northern New Mexico Citizens Advisory Board

Ms. Kay Planamento
SSAB Administrator
Nevada Test Site Programs (NTS-CAB)
c/o PAI

Ms. Sheree Black
SSAB Administrator
Oak Ridge Reservation Environmental Management Site-Specific Advisory Board

Ms. Deb Thompson
Office Administrator
Rocky Flats Citizens Advisory Board

Ms. Dawn Haygood
SSAB Administrator
Savannah River Site Citizens Advisory Board
c/o Westinghouse Savannah River Company
Public Involvement Office

D.3 State of Nevada

D.3.1 STATEWIDE OFFICES AND LEGISLATURE

The Honorable Kenny Guinn
Governor of Nevada

The Honorable Lorraine Hunt
Lieutenant Governor of Nevada

The Honorable Frankie Sue Del Papa
Attorney General of Nevada

Ms. Marybel Batjer
Chief of Staff
Office of the Governor

The Honorable William Raggio
Majority Leader
Nevada State Senate

The Honorable Dina Titus
Minority Leader
Nevada State Senate

The Honorable Richard Perkins
Speaker of the House
Nevada State Assembly

The Honorable Barbara Buckley
Majority Floor Leader
Nevada State Assembly

The Honorable Lynn Hettrick
Minority Floor Leader
Nevada State Assembly

The Honorable Lawrence E. Jacobsen
Chairman
Committee on High Level Radioactive Waste
Nevada State Legislature

The Honorable Marry Mortenson
Vice Chairman
Committee on High Level Radioactive Waste
Nevada State Legislature

Mr. John Meder
Research Division
Legislative Council Bureau
Nevada State Legislature

D.3.2 STATE AND LOCAL AGENCIES AND OFFICIALS

Mr. Alan Kalt
Comptroller
Churchill County

Ms. Irene Navis
Planning Manager
Clark County

Mr. George McCorkill
Program Director
Nuclear Waste Repository Oversight Program
Esmeralda County

Mr. Leonard Fiorenzi
Public Works Director
Eureka County

Mr. Andrew Remus
Yucca Mountain Repository Assessment Office
Inyo County

Mr. Mickey Yarbro
Chair, Board of Commissioners
Lander County

Mr. Jason Pitts
Administrative Coordinator
Lincoln County

Ms. Judith A. Shankle
Administrator
Office of Nuclear Projects
Mineral County

Mr. Les Bradshaw
Manager
Department of Natural Resources and Federal Facilities
Nye County

Mr. Dale Hammermeister
On-Site Representative
Department of Natural Resources and Federal Facilities
Nye County

Ms. Josie Larson
Director
Nuclear Waste Project Office
White Pine County

Mr. Robert Ferraro
Mayor of Boulder City

Mr. Kevin Phillips
Mayor of Caliente

Mr. James Gibson
Mayor of Henderson

Mr. Oscar Goodman
Mayor of Las Vegas

Mr. Charles Horne
Mayor of Mesquite

Mr. Michael Montandon
Mayor of North Las Vegas

Mr. Bob Cameron
Amargosa Valley Town Board Chair

Mr. Larry Gray
Chair
Beatty Town Advisory Board

Mr. Tim Leavitt
Pahrump Town Board Chair

Mr. Thomas Stephens
Director
Nevada Department of Transportation

Mr. Hugh Ricci
State Engineer
Nevada Division of Water Resources

Mr. Brian McKay
Chairman
Nevada Commission on Nuclear Projects

Mr. Robert Loux
Executive Director
Agency for Nuclear Projects
State of Nevada

Mr. Robert Halstead
Transportation Advisor
Agency for Nuclear Projects
State of Nevada

Mr. Joe Strolin
Administrator of Planning
Agency for Nuclear Projects
State of Nevada

D.4 Other States and Territories

The Honorable Don Siegelman
Governor of Alabama

The Honorable Tony Knowles
Governor of Alaska

The Honorable Tauese P.F. Sunia
Governor of American Samoa

The Honorable Jane Dee Hull
Governor of Arizona

The Honorable Mike Huckabee
Governor of Arkansas

The Honorable Gray Davis
Governor of California

The Honorable Bill Owens
Governor of Colorado

The Honorable John G. Rowland
Governor of Connecticut

The Honorable Ruth Ann Minner
Governor of Delaware

The Honorable Jeb Bush
Governor of Florida

The Honorable Roy Barnes
Governor of Georgia

The Honorable Carl T.C. Gutierrez
Governor of Guam

The Honorable Benjamin J. Cayetano
Governor of Hawaii

The Honorable Dirk Kempthorne
Governor of Idaho

The Honorable George Ryan
Governor of Illinois

The Honorable Frank O'Bannon
Governor of Indiana

The Honorable Tom Vilsack
Governor of Iowa

The Honorable Bill Graves
Governor of Kansas

The Honorable Paul E. Patton
Governor of Kentucky

The Honorable Mike Foster
Governor of Louisiana

The Honorable Angus S. King, Jr.
Governor of Maine

The Honorable Parris N. Glendening
Governor of Maryland

The Honorable Jane Swift
Governor of Massachusetts

The Honorable John Engler
Governor of Michigan

The Honorable Jesse Ventura
Governor of Minnesota

The Honorable Ronnie Musgrove
Governor of Mississippi

The Honorable Bob Holden
Governor of Missouri

The Honorable Judy Martz
Governor of Montana

The Honorable Mike Johanns
Governor of Nebraska

The Honorable Jeanne C. Shaheen
Governor of New Hampshire

The Honorable Donald T. DiFrancesco
Acting Governor of New Jersey

The Honorable Gary E. Johnson
Governor of New Mexico

The Honorable George E. Pataki
Governor of New York

The Honorable Mike Easley
Governor of North Carolina

The Honorable John Hoeven
Governor of North Dakota

The Honorable Pedro Tenoroio
Governor of Northern Mariana Islands

The Honorable Robert Taft
Governor of Ohio

The Honorable Frank Keating
Governor of Oklahoma

The Honorable John A. Kitzhaber
Governor of Oregon

The Honorable Tom J. Ridge
Governor of Pennsylvania

The Honorable Sila María Calderón
Governor of Puerto Rico

The Honorable Lincoln Almond
Governor of Rhode Island

The Honorable Jim Hodges
Governor of South Carolina

The Honorable William J. Janklow
Governor of South Dakota

The Honorable Don Sundquist
Governor of Tennessee

The Honorable Rick Perry
Governor of Texas

The Honorable Michael O. Leavitt
Governor of Utah

The Honorable Howard Dean, M.D.
Governor of Vermont

The Honorable James S. Gilmore, III
Governor of Virginia

The Honorable Charles W. Turnbull
Governor of Virgin Islands

The Honorable Gary Locke
Governor of Washington

The Honorable Bob Wise
Governor of West Virginia

The Honorable Scott McCallum
Governor of Wisconsin

The Honorable Jim Geringer
Governor of Wyoming

D.5 Native American Groups

Mr. Curtis Anderson
Tribal Chairperson
Las Vegas Paiute Colony

Ms. Geneal Anderson
Tribal Chairperson
Paiute Indian Tribes of Utah

Mr. Richard Arnold
Tribal Chairperson
Pahrump Paiute Tribe

Ms. Rose Marie Bahe
Tribal Chairperson
Benton Paiute Indian Tribe

Ms. Carmen Bradley
Tribal Chairperson
Kaibab Band of Southern Paiutes

Mr. James Birchim
Tribal Chairperson
Yomba Shoshone Tribe

Mr. David Chavez
Tribal Chairperson
Chemehuevi Indian Tribe

Mr. Daniel Eddy, Jr.
Tribal Chairperson
Colorado River Indian Tribes

Ms. Pauline Esteves
Tribal Chairperson
Timbisha Shoshone Tribe

Mr. Monty Bengochia
Tribal Chairperson
Bishop Paiute Indian Tribe

Mr. Jesse Leeds
Chairman of the Board
Las Vegas Indian Center

Mr. Frederick I. Marr
Counsel to the Timbisha Shoshone Tribe

Mr. Henry Blackeye, Jr.
Tribal Chairperson
Duckwater Shoshone Tribe

Ms. Patricia Vance
Tribal Chairperson
Big Pine Paiute Tribe of the Owens Valley

Mr. Vernon Miller
Tribal Chairperson
Fort Independence Indian Tribe

Mr. Alfred Stanton
Tribal Chairperson
Ely Shoshone Tribe

Mr. Eugene Tom
Tribal Chairperson
Moapa Paiute Indian Tribe

Ms. Racheal Joseph
Interim Tribal Chairperson
Lone Pine Paiute-Shoshone Tribe

Mr. Darryl Bahe
Tribal Representative
Benton Paiute Indian Tribe

Ms. Lila Carter
Tribal Representative
Las Vegas Paiute Colony

Mr. Jerry Charles
Tribal Representative
Ely Shoshone Tribe

Mr. Lee Chavez
Tribal Representative
Bishop Paiute Indian Tribe

Ms. Betty L. Cornelius
Tribal Representative
Colorado River Indian Tribes

Mr. Maurice Frank-Churchill
Tribal Representative
Yomba Shoshone Tribe

Ms. Grace Goad
Tribal Representative
Timbisha Shoshone Tribe

Ms. Vivienne-Caron Jake
Tribal Representative
Kaibab Band of Southern Paiutes

Mr. Mel Joseph
Tribal Representative
Lone Pine Paiute-Shoshone Tribe

Ms. Lawanda Laffoon
Tribal Representative
Colorado River Indian Tribes

Ms. Cynthia V. Lynch
Tribal Representative
Pahrump Paiute Tribe

Mr. Calvin Meyers
Tribal Representative
Moapa Paiute Indian Tribe

Ms. Clara Belle Jim
Tribal Representative
Pahrump Paiute Tribe

Ms. Marian Zucco
Tribal Representative
Big Pine Paiute Tribe of the Owens Valley

Ms. Lalovi Miller
Tribal Representative
Moapa Paiute Indian Tribe

Ms. Bertha Moose
Tribal Representative
Big Pine Paiute Tribe of the Owens Valley

Ms. Gaylene Moose
Tribal Representative
Bishop Paiute Tribe

Ms. Eleanor Hemphill
Tribal Representative
Fort Independence Indian Tribe

Ms. Vermina Stevens
Chairman
Elko Band Council

Ms. Lydia Sam
Chairman
Battle Mountain Band Council

Ms. Michelle Saulque
Tribal Representative
Benton Paiute Indian Tribe

Ms. Gevene E. Savala
Tribal Representative
Kaibab Band of Southern Paiutes

Ms. Stacy Stahl
Tribal Chairperson
Yerington Tribal Council

Mr. Darryl Crawford
Executive Director
Nevada Indian Environmental Coalition
Inter-Tribal Council of Nevada

Mr. Steve Poole
Nevada Indian Environmental Coalition
Inter-Tribal Council of Nevada

Mr. Darryl King
Tribal Representative
Chemehuevi Tribe

Mr. Willie Johnny
Vice-Chairperson
Wells Band Council

Ms. Ernestine Coble
Fort McDermitt Paiute-Shoshone Tribe
MRS Project Office

Ms. Helen Snapp
Fort McDermitt Paiute Shoshone Tribe

Mr. Brian Wallace
Chairman
Washoe Tribal Council

Mr. Alvin James
Pyramid Lake Paiute Tribe

Mr. William Rosse, Sr.
Western Shoshone Nation

D.6 Environmental and Public Interest Groups

D.6.1 NATIONAL

Mr. Jim Bridgman
Program Associate
Alliance for Nuclear Accountability
Washington, D.C.

Ms. Susan Gordon
Director
Alliance for Nuclear Accountability
Seattle, WA

Ms. Rebecca K. Blood
Senior Government Relations Representative
American Public Power Association
Washington, D.C.

Ms. Janet Greenwald
Citizens for Alternatives to Radioactive Dumping (CARD)
Albuquerque, NM

Dr. Mildred McClain
Harambee House, Inc.
Citizens for Environmental Justice, Inc.
Savannah, GA

Mr. Jerry Pardilla
National Tribal Environmental Council
Albuquerque, NM

Ms. Suzanne Westerly
Acting Executive Director
Concerned Citizens for Nuclear Safety
Santa Fe, NM

Mr. Seth Kirshenberg
Executive Director
Energy Communities Alliance
Washington, D.C.

Mr. Fred Krupp
Executive Director
National Headquarters
Environmental Defense Fund, Inc.
New York, NY

Mr. Daniel Kirshner
Senior Economic Analyst
West Coast Office
Environmental Defense Fund, Inc.
Oakland, CA

Mr. Chuck Broscious
Executive Director
Environmental Defense Institute
Troy, ID

Dr. Gawain Kripke
Director, Economics Programs
Friends of the Earth
Washington, D.C.

Mr. Tom Carpenter
Government Accountability Project
West Coast Office
Seattle, WA

Mr. Steven Dolley
Research Director
Nuclear Control Institute
Washington, D.C.

Mr. Tom Goldtooth
National Coordinator
Indigenous Environmental Network
Bemidji, MN

Dr. Arjun Makhijani
President
Institute for Energy and Environmental Research (IEER)
Takoma Park, MD

Mr. Daniel Taylor
Executive Director
California State Office
National Audubon Society
Sacramento, CA

Ms. JoAnn Chase
Executive Director
National Congress of American Indians
Washington, D.C.

Ms. Libby Fayad
Counsel
National Parks and Conservation Association
Washington, D.C.

Mr. Steven Shimberg, Vice President
Federal and International Affairs
National Wildlife Federation
Washington, D.C.

Ms. Gail Small
Native Action
Lame Deer, MT

Ms. Jill Kennay
Resources Manager
Natural Land Institute
Rockford, IL

Dr. Thomas B. Cochran
Director, Nuclear Programs
Natural Resources Defense Council, Inc.
Washington, D.C.

Mr. David Beckman
Los Angeles Office
Natural Resources Defense Council
Los Angeles, CA

Mr. Eric Goldstein
New York Office
Natural Resources Defense Council
New York, NY

Ms. Maggie Coon
Director of Government Relations
The Nature Conservancy
Arlington, VA

Mr. Graham Chisholm
State Director
Nevada Field Office
The Nature Conservancy
Reno, NV

Mr. Ralph Hutchison
Coordinator
Oak Ridge Environmental Peace Alliance
Oak Ridge, TN

Dr. Robert K. Musil, Ph.D.
Executive Director
Physicians for Social Responsibility
Washington, D.C.

Ms. Christine Chandler
Responsible Environmental Action League
Los Alamos, NM

Mr. Tom Marshall
Rocky Mountain Peace and Justice Center
Boulder, CO

Mr. Scott Denman
Executive Director
Safe Energy Communication Council
Washington, D.C.

Ms. Barbara Boyle
Regional Director
CA/NV/HI Office
Sierra Club
Sacramento, CA

Ms. Beatrice Brailsford
Program Director
Snake River Alliance
Pocatello, ID

Mr. Richard Moore
Southwest Network for Environmental and Economic Justice
Albuquerque, NM

Mr. Don Hancock
Southwest Research and Information Center
Albuquerque, NM

Ms. Marylia Kelley
Tri-Valley CAREs
Livermore, CA

Mr. Alden Meyer
Director, Government Relations
Union of Concerned Scientists
Washington, D.C.

Mr. Kevin Kamps
Nuclear Waste Specialist
Nuclear Information and Resource Service
Washington, D.C.

Mr. Tom Zamora Collina
Director of Arms Control Project
Union of Concerned Scientists
Washington, D.C.

Ms. Jackie Cabasso
Executive Director
Western States Legal Foundation
Oakland, CA

Ms. Diane Jackson
Administrative Assistant
Ecology and Economics Research Department
The Wilderness Society
Washington, D.C.

Mr. Theodore Webb
Peace Action
Sacramento, CA

Ms. Shelby Jones
Solar Presents
Sacramento, CA

Ms. Lorraine Krofchok
Grandmothers for Peace
Sacramento, CA

Ms. Shiela Baker
Nuclear Waste Information Committee
San Luis Obispo, CA

D.6.2 STATE AND LOCAL

Ms. Kaitlin Backlund
Executive Director
Citizen Alert
Las Vegas, NV

Ms. M. Lee Dazey
Northern Nevada Director
Citizen Alert
Reno, NV

Ms. Allie Smith
Citizen Alert
Las Vegas, NV

Co-Chair, Northern Nevada
The Study Committee
Dayton, NV

Mr. Bill Vasconi
Co-Chair, Southern Nevada
The Study Committee
Las Vegas, NV

Ms. Judy Treichel
Nevada Nuclear Waste Task Force
Las Vegas, NV

Ms. Grace Potorti
Rural Alliance For Military Accountability
Reno, NV

D.7 Other Groups and Individuals

Ms. Janice Owens
Director
Nuclear Waste Programs
National Association of Regulatory Utility Commissioners

Mr. Joe F. Colvin
President and Chief Executive Officer
Nuclear Energy Institute

Ms. Angelina S. Howard
Senior Vice President
Industry Communications Division
Nuclear Energy Institute

Mr. Marvin S. Fertel
Senior Vice President
Nuclear Infrastructure Support and International Programs Division
Nuclear Energy Institute

Mr. Ralph E. Beedle
Senior Vice President
Nuclear Generation Division
Nuclear Energy Institute

Mr. John E. Kane
Vice President
Government Affairs Division
Nuclear Energy Institute

Mr. Steven P. Kraft
Director
Nuclear Fuel Management
Nuclear Energy Institute

Mr. Ralph Andersen
Project Manager
Plant Support
Nuclear Energy Institute

Mr. Ron McCullum
Senior Project Manager
Hughes Nuclear Fuel
Nuclear Energy Institute

Mr. Scott Peterson
Senior Director
External Communications
Nuclear Energy Institute

Mr. Steven Kerekes
Section Manager
Media Relations
Nuclear Energy Institute

Dr. Klaus Stezenbach
Director
Harry Reid Center for Environmental Studies
University of Nevada, Las Vegas

Dr. Don Baepler
Director of Museum
Harry Reid Center for Environmental Studies
University of Nevada, Las Vegas

Dr. Stephen Wells
President
Desert Research Institute

Mr. Rex Massey
RMA Research

Mr. Chris Binzer
Robison-Seidler

Ms. Ginger Swartz
Swartz and Associates

D.8 Reading Rooms and Libraries

Mr. Andrew Remus
Inyo County Yucca Mountain Repository
Assessment Office
Independence, CA

Ms. Laura Martinez
U.S. Department of Energy
Public Reading Room
Oakland, CA

Mr. John Horst
National Renewable Energy Laboratory
Public Reading Room
Golden, CO

Mr. Gary Morrell
Rocky Flats Public Reading Room
Westminster, CO

Ms. Nancy Mays/Ms. Laura Nicholas
Atlanta Support Office
U.S. Department of Energy
Public Reading Room
Atlanta, GA

Mr. Joel W. Seymour
Southeastern Power Administration
U.S. Department of Energy
Reading Room
Elberton, GA

Mr. Adrien Taylor
Boise State University Library
Government Documents
Boise, ID

Mr. Brent Jacobson
Idaho Operations Office
U.S. Department of Energy
Public Reading Room
Idaho Falls, ID

Mr. John Shuler
Chicago Operations Office
Document Department
University of Illinois at Chicago
Chicago, IL

Ms. Deanna Harvey
Strategic Petroleum Reserve Project
Management Office
U.S. Department of Energy
SPRPMO/SEB Reading Room
New Orleans, LA

Mr. Alan Kalt
Churchill County
Fallon, NV

Mr. Dennis Bechtel
Clark County
Las Vegas, NV

Ms. Aimee Quinn
Government Publications
Dickenson Library
University of Nevada, Las Vegas

Mr. George McCorkell
Esmeralda County
Repository Oversight Program
Goldfield, NV

Mr. Leonard Fiorenzi
Eureka County
Courthouse Annex
Eureka, NV

Mr. Mickey Yarbro
Lander County
Austin, NV

Mr. Jason Pitts
Lincoln County
Caliente, NV 89008

Ms. Judy Shankle
Mineral County
Hawthorne, NV

Ms. Heather Elliot
Nevada State Clearinghouse
Department of Administration
Carson City, NV

Mr. Les Bradshaw
Nye County
Department of Natural Resources and
Federal Facilities
Pahrump, NV

University of Nevada, Reno
The University of Nevada Libraries
Business and Government Information Center
Reno, NV

Ms. Josie Larson
White Pine County
Ely, NV

Ms. Marina Anderson
Beatty Yucca Mountain Science Center
Beatty, NV

Mr. John Pawlak
Las Vegas Yucca Mountain Science Center
Las Vegas, NV

Ms. Terri Brown
Pahrump Yucca Mountain Science Center
Pahrump, NV

Ms. Dawn Knepper
Albuquerque Operations Office
U.S. Department of Energy
Contract Reading Room
Kirtland Air Force Base
Albuquerque, NM

Ms. Diane Rayer
Fernald Area Office
U.S. Department of Energy
Public Information Room
Cincinnati, OH

Ms. Marti Ayers
Southwestern Power Administration
U.S. Department of Energy
Tulsa, OK

Mr. Bill Zimmerman/Ms. Darlene Freestad
Bonneville Power Administration
U.S. Department of Energy
Portland, OR

Ms. Ann C. Dunlap
Pittsburgh Energy Technology Center
U.S. Department of Energy
Pittsburgh, PA

Ms. Pauline Connell
Savannah River Operations Office
Gregg-Graniteville Library
University of South Carolina-Aiken
Aiken, SC

Mr. William Suddeth
University of South Carolina
Thomas Cooper Library
Documents/Microforms Department
Columbia, SC

Mr. Walter Perry
Oak Ridge Operations Office
U.S. Department of Energy
Public Reading Room
American Museum of Science and Energy
Oak Ridge, TN

Mr. Stephen Short
Southern Methodist University
Central Union Libraries Fondren Library
Government Information
Dallas, TX

Mr. Walter Jones
University of Utah
Marriott Library
Special Collections
Salt Lake City, UT

Ms. Carolyn Lawson
Headquarters Office
U.S. Department of Energy
Washington, D.C.

Ms. Terri Traub
Richland Operations Center
U.S. Department of Energy
Public Reading Room
Richland, WA

Appendix E

Index

APPENDIX E. INDEX

A

accident, S-6, 3-10, 3-11
aging, S-2, 2-4, 2-8, 2-9, 2-10, 2-12, 2-13, 2-21, 3-6, 3-7, 3-8, 3-9, 3-13, 3-14, 3-19
Alloy-22, S-3, 2-4, 2-23, 2-24, 2-28, 3-20
American Indian Writers Subgroup, 3-16
areal mass load, S-1, S-3, 2-6, 2-7
assembly transfer, 2-12, 2-14

B

blending, S-2, 1-2, 2-4, 2-8, 2-12, 2-14, 2-15, 2-18

C

canister
  disposable, 2-12, 2-14, 2-15
  dry storage, 3-18, 3-19
  dual-purpose, 2-14, 2-15
concrete, S-3, 2-15, 2-25, 3-13
  batch plant, 2-15, 3-5
  liner, 2-4, 2-25, 3-13
Consolidated Group of Tribes and Organizations, 3-16
corrosion, S-3, 2-3, 2-4, 2-23, 2-25, 3-18
cumulative impacts, S-4, 3-22

D

defense-in-depth, 2-30
desert tortoise, 3-8
design
  alternative, 2-4
  feature, S-2, 1-1, 1-2, 1-3, 2-1, 2-3, 2-31
  option, S-1, 1-1
disposal container, 2-3, 2-15, 3-18, 3-19
disturbed area, 2-11, 2-30, 3-5, 3-6, 3-7, 3-8
dose, 3-3, 3-4, 3-11, 3-19, 3-20, 3-21, 3-22
  peak of the mean annual, 3-21, 3-22
Draft EIS design, S-2, 1-2, 2-7, 2-9, 2-12, 2-15, 2-18, 2-19, 2-21, 2-22, 2-23, 2-25, 2-28, 3-20
drift, S-1, S-2, 2-1, 2-4, 2-5, 2-6, 2-8, 2-9, 2-17, 2-19, 2-20, 2-21, 2-22, 2-23, 2-25, 2-27, 2-30, 2-31, 3-5, 3-12, 3-13
drip shield, S-3, S-4, 2-3, 2-4, 2-5, 2-11, 2-23, 2-25, 2-26, 2-27, 2-30, 3-18, 3-19, 3-21
dry storage, 3-11, 3-14, 3-18, 3-19
dust, 2-16, 3-4, 3-5, 3-6, 3-14, 3-17

E

electric power distribution system, 2-18
emissions
  gaseous, 3-5
  vehicle, 3-17
emplacement, S-3, 2-1, 2-6, 2-11, 2-12, 2-16, 2-22, 2-23
emplacement pallet, S-3, S-4, 2-4, 2-5, 2-22, 2-25, 2-28, 2-29, 3-17, 3-18
Environmental Protection Agency, 3-15, 3-22
environmental resource area, S-4, 3-1, 3-2, 3-3, 3-16, 3-18
evaporation pond, 2-13, 2-16
excavated rock storage area, 2-13, 2-15, 2-16, 2-19, 2-30, 3-7
Exploratory Studies Facility, S-3, 2-6

F

fatalities
  industrial accidents, S-6, 3-10
  latent cancer, S-5, S-6, 3-4, 3-10, 3-11
  traffic, S-7, 3-17
  vehicle emissions, 3-17
Federal Register notices
  64 *FR* 46976, 3-22
  64 *FR* 8640, 2-28
fuel assembly, S-2, 2-4, 2-14, 2-15, 3-11

G

ground support, S-3, 2-4, 2-15, 2-23, 2-25, 3-13
groundwater, 2-6, 3-5, 3-6

H

heat output, S-2, S-3, 1-2, 2-3, 2-7, 2-8, 2-15
high-level radioactive waste, 2-15
2-6, 2-7, 2-19,
higher-temperature repository operating mode, S-1, S-3, 1-2, 1-3, 2-5, 2-6, 2-7, 2-10, 2-11, 2-15, 2-16, 2-17, 2-19, 2-21, 2-30

I

impacts, environmental, S-1, S-2, S-4, S-5, S-6, S-7, 1-1, 1-2, 1-3, 2-3, 2-7, 3-1 to 3-22
invert, S-3, 2-4, 2-5, 2-15, 2-23, 2-25, 2-26, 2-27

J

K

L

land withdrawal, S-5, 3-3
License Application, 2-9, 2-10, 2-28, 2-31
licensing, 2-9, 2-28
line-loading, 2-21
linear thermal load, S-2, S-3, 1-2, 2-6, 2-7, 2-9, 2-22
long-term performance, S-1, S-3, S-4, 1-2, 2-4, 2-6, 2-11, 2-28, 2-31, 3-20, 3-22
lower-temperature repository operating mode, S-1, S-3, S-4, 1-2, 1-3, 2-5, 2-6, 2-7, 2-8, 2-9, 2-10, 2-11, 2-12, 2-16, 2-17, 2-18, 2-19, 2-21, 2-30, 3-1

M

mitigation, 2-21, 3-9, 3-16
monitoring, 2-9, 2-11

N

Native American, 3-16
Nevada Test Site, 2-2, 2-18, 3-6, 3-7, 3-13, 3-14, 3-15, 3-16
North Portal, 2-12, 2-16, 2-17, 2-18
North Portal Operations Area, 2-2, 2-12, 2-13, 2-16, 2-18, 2-19
North Ramp, 2-2, 2-13, 2-17, 2-23

O

P

performance confirmation, 2-9, 2-11, 2-21, 2-28
performance monitoring, 2-21, 2-31
primary impact indicators, S-4, 3-1, 3-2, 3-3
Proposed Action, S-1, S-2, 1-1, 1-3, 2-1, 2-3, 2-7, 3-22

Q

R

Radiologically Controlled Area, 2-12, 2-13, 2-31
receptor, 3-21, 3-22
repository phases
  closure, S-3, 2-1, 2-6, 2-9, 2-10, 2-11, 2-22, 2-25, 2-28, 2-30, 3-4
  construction, 2-9, 2-10, 2-28
  operation and monitoring, 2-9, 2-10

S

S&ER flexible design, S-1, S-2, S-4, 1-1, 1-2, 1-3, 2-1 to 2-31
shaft, S-3, 2-6, 2-16, 2-17, 2-21, 2-22, 2-25, 2-30, 2-31
shipping cask, 2-12, 2-14, 2-15, 3-18, 3-19
short-term performance, 2-6
Site Recommendation, 2-9, 2-10
solar panel, 3-14, 3-18, 3-19
solar power generating facility, S-2, 2-4, 2-18, 3-9, 3-12, 3-18
South Portal, 2-12, 2-13, 2-15, 2-16, 2-17, 2-18
South Portal Operations Area, 2-2, 2-12, 2-13, 2-15, 2-16, 2-18, 2-19
South Ramp, 2-2, 2-13, 2-17, 2-22

T

thermal load scenarios, S-1, 1-2, 2-3, 2-7, 2-19, 2-20, 2-21, 3-1
thermal output, S-1, 2-3, 2-4, 2-8
Total System Performance Assessment, 3-20, 3-21, 3-22
transporter, 2-22, 2-23
truck
  heavy-haul, 2-12
  legal-weight, 2-12, 3-18
trunnion, 2-24

U

uncertainty, 1-1, 1-3, 2-3, 2-4

V

ventilation, S-2, S-3, 1-2, 2-3, 2-4, 2-6, 2-9, 2-16, 2-17, 2-21, 2-22, 2-30, 2-31
  forced-air, 2-7, 2-8, 2-9, 2-21

natural, 2-7, 2-8, 2-9
period, 2-6, 2-8, 2-9, 2-11
Ventilation Shaft Operations Area, 2-12, 2-13, 2-16, 2-18, 2-31

W

Waste Handling Building, S-2, 2-4, 2-11, 2-12, 2-13, 2-14, 2-22, 2-23, 2-25, 2-31, 3-11, 3-13
waste package, S-1, S-2, S-3, 1-3, 2-1, 2-4, 2-6, 2-7, 2-8, 2-14, 2-15, 2-16, 2-22, 2-23, 2-24, 2-25, 2-26, 2-27, 2-28, 2-29
waste package spacing, S-2, S-3, 2-3, 2-4, 2-6, 2-8, 2-9
Waste Treatment Building, 3-16
wind farm, 2-18

X

Y

Z

CONVERSIONS

METRIC TO ENGLISH			ENGLISH TO METRIC		
Multiply	**by**	**To get**	**Multiply**	**by**	**To get**
Area					
Square meters	10.764	Square feet	Square feet	0.092903	Square meters
Square kilometers	247.1	Acres	Acres	0.0040469	Square kilometers
Square kilometers	0.3861	Square miles	Square miles	2.59	Square kilometers
Concentration					
Kilograms/sq. meter	0.16667	Tons/acre	Tons/acre	0.5999	Kilograms/sq. meter
Milligrams/liter[a]	1	Parts/million	Parts/million[a]	1	Milligrams/liter
Micrograms/liter[a]	1	Parts/billion	Parts/billion[a]	1	Micrograms/liter
Micrograms/cu. meter[a]	1	Parts/trillion	Parts/trillion[a]	1	Micrograms/cu. meter
Density					
Grams/cu. cm	62.428	Pounds/cu. ft.	Pounds/cu. ft.	0.016018	Grams/cu. cm
Grams/cu. meter	0.0000624	Pounds/cu. ft.	Pounds/cu. ft.	16,025.6	Grams/cu. meter
Length					
Centimeters	0.3937	Inches	Inches	2.54	Centimeters
Meters	3.2808	Feet	Feet	0.3048	Meters
Kilometers	0.62137	Miles	Miles	1.6093	Kilometers
Temperature					
Absolute					
Degrees C + 17.78	1.8	Degrees F	Degrees F – 32	0.55556	Degrees C
Relative					
Degrees C	1.8	Degrees F	Degrees F	0.55556	Degrees C
Velocity/Rate					
Cu. meters/second	2118.9	Cu. feet/minute	Cu. feet/minute	0.00047195	Cu. meters/second
Grams/second	7.9366	Pounds/hour	Pounds/hour	0.126	Grams/second
Meters/second	2.237	Miles/hour	Miles/hour	0.44704	Meters/second
Volume					
Liters	0.26418	Gallons	Gallons	3.78533	Liters
Liters	0.035316	Cubic feet	Cubic feet	28.316	Liters
Liters	0.001308	Cubic yards	Cubic yards	764.54	Liters
Cubic meters	264.17	Gallons	Gallons	0.0037854	Cubic meters
Cubic meters	35.314	Cubic feet	Cubic feet	0.028317	Cubic meters
Cubic meters	1.3079	Cubic yards	Cubic yards	0.76456	Cubic meters
Cubic meters	0.0008107	Acre-feet	Acre-feet	1233.49	Cubic meters
Weight/Mass					
Grams	0.035274	Ounces	Ounces	28.35	Grams
Kilograms	2.2046	Pounds	Pounds	0.45359	Kilograms
Kilograms	0.0011023	Tons (short)	Tons (short)	907.18	Kilograms
Metric tons	1.1023	Tons (short)	Tons (short)	0.90718	Metric tons
ENGLISH TO ENGLISH					
Acre-feet	325,850.7	Gallons	Gallons	0.000003046	Acre-feet
Acres	43,560	Square feet	Square feet	0.000022957	Acres
Square miles	640	Acres	Acres	0.0015625	Square miles

a. These widely used conversions are only valid under specific temperature and pressure conditions.

METRIC PREFIXES

Prefix	Symbol	Multiplication factor	
exa-	E	1,000,000,000,000,000,000	$= 10^{18}$
peta-	P	1,000,000,000,000,000	$= 10^{15}$
tera-	T	1,000,000,000,000	$= 10^{12}$
giga-	G	1,000,000,000	$= 10^{9}$
mega-	M	1,000,000	$= 10^{6}$
kilo-	k	1,000	$= 10^{3}$
deca-	D	10	$= 10^{1}$
deci-	d	0.1	$= 10^{-1}$
centi-	c	0.01	$= 10^{-2}$
milli-	m	0.001	$= 10^{-3}$
micro-	µ	0.000 001	$= 10^{-6}$
nano-	n	0.000 000 001	$= 10^{-9}$
pico-	p	0.000 000 000 001	$= 10^{-12}$