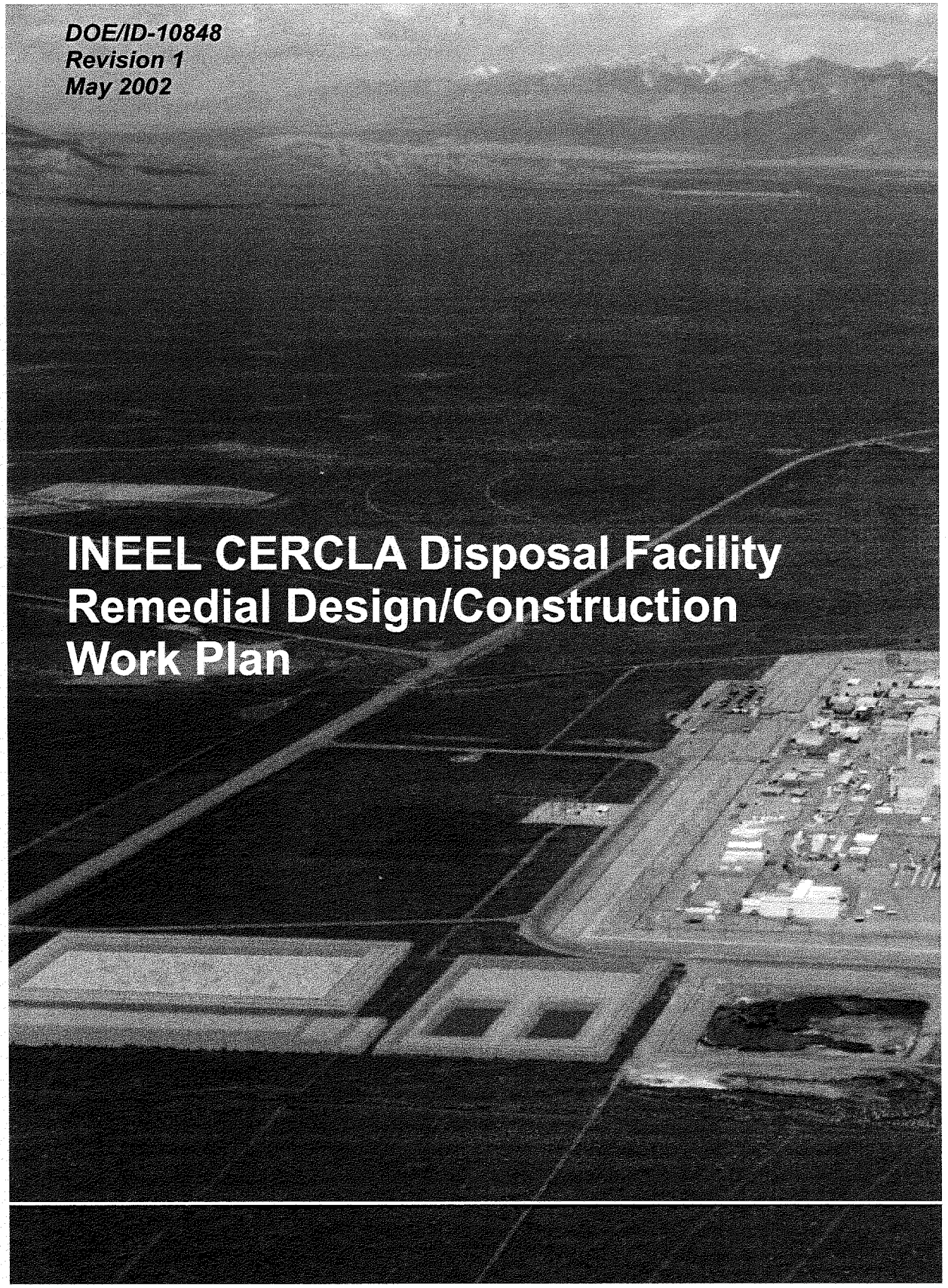

DOE/ID-10848
Revision 1
May 2002

INEEL CERCLA Disposal Facility Remedial Design/Construction Work Plan

DOE/ID-10848
Revision 1
May 2002

U.S. Department of Energy
Idaho Operations Office

INEEL CERCLA Disposal Facility Remedial Design/Construction Work Plan

INEEL
Home of Science and Engineering Solutions
Idaho National Engineering and Environmental Laboratory

DOE/ID-10848
Revision 1

INEEL CERCLA Disposal Facility Remedial Design/Construction Work Plan

May 2002

Prepared for the
U.S. Department of Energy
Idaho Operations Office

ABSTRACT

This Remedial Design/Construction Work Plan provides the framework for design, and construction of the INEEL CERCLA Disposal Facility landfill, evaporation pond, and associated components at Operable Unit 3-13. This facility will be an engineered facility meeting DOE Order 435.1, Resource Conservation and Recovery Act Subtitle C, Idaho Hazardous Waste Management Act and Toxic Substances Control Act polychlorinated biphenyl landfill design and construction requirements. This work plan presents the design basis, design criteria, design requirements, and construction requirements for the various components that are part of the landfill and evaporation pond. Summaries of the construction work elements are presented herein, with a schedule for presenting the operational and management elements in the ICDF Remedial Action Work Plan.

CONTENTS

ABSTRACT iii

ACRONYMS xi

1. INTRODUCTION 1-1

1.1 Background 1-1

1.2 Selected Remedy 1-5

1.3 Preparatory Design Activities 1-6

1.4 Work Plan Organization 1-8

2. DESIGN BASIS 2-1

2.1 General Description of the Project Components 2-1

2.1.1 Support Facilities 2-1
2.1.2 Electrical Power 2-1
2.1.3 Title III Services 2-1

2.2 Design Criteria 2-1

2.2.1 ICDF Landfill and Evaporation Pond System 2-2
2.2.2 Siting 2-2
2.2.3 Landfill 2-3
2.2.4 Evaporation Pond 2-5
2.2.5 Leachate Collection System 2-5
2.2.6 Landfill Cover 2-5
2.2.7 Boundaries and Interfaces 2-5
2.2.8 Operations 2-5
2.2.9 Health and Safety 2-6
2.2.10 Waste Management 2-6
2.2.11 Operating Environment and Natural Phenomena 2-6
2.2.12 Civil, Architectural, and Structural 2-6
2.2.13 Mechanical 2-7
2.2.14 Fire Protection 2-7
2.2.15 Electrical 2-7
2.2.16 Closure 2-7

2.3 DOE Related Codes, Standards, and Documents 2-8

2.4 Engineering Standards 2-9

2.5 Environmental and Safety Requirements 2-10

2.6 Internal Procedures 2-10

2.7 General Design Assumptions 2-11

2.8 Specific Design Assumptions 2-12

2.8.1 Leachate Collection System 2-12
2.8.2 ICDF Landfill 2-12
2.8.3 ICDF Evaporation Pond 2-12
2.8.4 Waste Acceptance and Waste Management 2-12

2.9 Quality Assurance 2-13

3. REMEDIAL DESIGN 3-1

3.1 Project Site 3-1

3.2 Physical Site Description 3-2

3.3 Design Calculations/Studies 3-3

3.4 Site Preparation 3-3

3.5 Construction Staging 3-3

3.6 Earthwork 3-3

3.6.1 ICDF Landfill 3-4
3.6.2 Leachate Collection System 3-4
3.6.3 ICDF Evaporation Pond 3-4
3.6.4 ICDF Crest Pad Building 3-4
3.6.5 Final Cover 3-4

3.7 Landfill 3-4

3.8 Evaporation Pond 3-5

3.9 Landfill and Evaporation Pond Liners 3-6

3.10 Leachate Collection System 3-7

3.11 Process Instrumentation and Control System 3-7

3.12 Crest Pad Buildings 3-7

3.13 Final Landfill Cover 3-8

3.14 Piping 3-10

3.15 Warning Signs and Permanently Surveyed Benchmarks 3-10

3.16 Surface Water and Erosion Protection 3-10

3.17 Groundwater Monitoring 3-11

4. HUMAN HEALTH AND ENVIRONMENTAL COMPLIANCE 4-1

4.1 Remedial Action Objectives 4-1

4.2 Applicable or Relevant and Appropriate Requirements 4-2

5. CONSTRUCTION WORK PLAN 5-1

5.1 Relevant Changes to the RD/RA Scope of Work 5-1

5.1.1 ICDF Landfill and Evaporation Pond Construction Phasing 5-1
5.1.2 ICDF Evaporation Pond Liner 5-1
5.1.3 Reconfiguration of ICDF RD/CWP 5-2

5.2 Subcontracting Plan 5-2

5.3 Remedial Action Work Tasks 5-3

5.3.1 Premobilization 5-3
5.3.2 Mobilization 5-3
5.3.3 Storm Water Management and Sediment Control 5-3
5.3.4 Dust Control 5-3
5.3.5 Clearing and Grubbing the Sites 5-4
5.3.6 Borrow, Haul, and Stockpile 5-4
5.3.7 Soil Excavation 5-5
5.3.8 Soil Consolidation 5-6
5.3.9 Construction Activities 5-6
5.3.10 Test Pad 5-9
5.3.11 Earthwork 5-10
5.3.12 ICDF Landfill Construction 5-10
5.3.13 ICDF Landfill Liner Construction 5-11
5.3.14 ICDF Evaporation Pond Construction 5-12
5.3.15 ICDF Evaporation Pond Liner Construction 5-12
5.3.16 Reclamation Seeding 5-13
5.3.17 Demobilization 5-13
5.3.18 Institutional Controls 5-13
5.3.19 Transportation, Placement, and Compaction of Waste Layers 5-14
5.3.20 Groundwater Monitoring 5-14
5.3.21 Leachate Sampling and Management 5-15

5.4 Field Oversight/Construction Management 5-16

5.5 Inspections 5-16

5.5.1 Construction Quality Inspections 5-16
5.5.2 Prefinal Inspection 5-17
5.5.3 Prefinal Inspection Report 5-17
5.5.4 Final Inspection 5-17
5.5.5 System Operability Testing and Startup 5-18

5.6 Operations and Maintenance Plan 5-18

5.7 Waste Minimization Plan 5-18

5.8 Project Cost Estimate 5-19

5.9 Project Schedule and Sequencing 5-19

5.10 Construction Health and Safety Plan 5-19

5.11 Waste Management Plan 5-19

5.11.1 Construction Waste Management 5-20
5.11.2 Operations Waste Management 5-20

5.12 Spill Prevention/Response Program 5-20

5.13 Remedial Action Report 5-21

5.14 Closure Activities 5-21

6. FIVE-YEAR REVIEW 6-1

7. REFERENCES 7-1

Appendix Volume 1 of 5—Design Analyses

Appendix A—Leachate/Contaminant Reduction Time, EDF-ER-274

Appendix B—Fate and Transport Modeling Results, EDF-ER-275

Appendix C—Liner/Leachate Compatibility Study, EDF-ER-278

Appendix Volume 2 of 5—Design Analyses (continued)

Appendix D—Evaluation of Geotechnical Investigations and Calculations Required to Complete Design and Construction, EDF-ER-276

Appendix E—Seismic Evaluation of Landfill and Evaporation Pond, EDF-ER-282

Appendix F—Subsurface Consolidation, EDF-ER-266

Appendix G—Slope Stability Assessments, EDF-ER-268

Appendix H—Landfill Compaction/Subsidence Study, EDF-ER-267

Appendix I—Waste-Soil Design Ratio Calculations, EDF-ER-277

Appendix J—Liner and Final Cover Long Term Performance Evaluation and Final Cover Life Cycle Expectation, EDF-ER-281

Appendix K—Landfill Leachate Collection System Design Analysis, EDF-ER-280

Appendix L—Evaporation Pond Sizing with Water Balance and Make-up Water Calculations, EDF-ER-271

Appendix M—Hydrologic Modeling of Final Cover, EDF-ER-279

Appendix Volume 3 of 5—Design Analysis (continued)

Appendix N—IDAPA Preliminary Air Screening Results, EDF-ER-315

Appendix O—NESHAP Modeling for the ICDF Complex, EDF-ER-290

Appendix P—Waste Acceptance Criteria for the ICDF Landfill, DOE/ID-10865

Appendix Q—Waste Acceptance Criteria for the ICDF Evaporation Pond, DOE/ID-10866

Appendix R—Screening Level Ecological Risk Assessment, EDF-ER-311

Appendix S—INEEL CERCLA Disposal Facility Complex Groundwater Monitoring Plan, DOE/ID-10955

Appendix T—INEEL CERCLA Disposal Facility Waste Placement Plan, EDF-ER-286

Appendix Volume 4 of 5—Construction

Appendix U—INEEL CERCLA Disposal Facility Test Pad Construction Report, EDF-2899

Appendix V—Storm Water Pollution Prevention Plan for the ICDF Landfill and Evaporation Pond, PLN-962

Appendix W—INEEL CERCLA Disposal Facility Construction Waste Management Plan, DOE/ID-10958

Appendix X—INEEL CERCLA Disposal Facility Construction Quality Assurance Plan, DOE/ID-10851

Appendix Y—Technical Specifications for the INEEL CERCLA Disposal Facility, SPC-1476

Appendix Z—INEEL CERCLA Disposal Facility – Drawings

Appendix Volume 5 of 5—Project Management and Supporting Design Files

Appendix AA—Project Schedule and Assumptions

Appendix BB—Detailed Cost Estimate

Appendix CC—Technical and Functional Requirements – WAG 3 INEEL CERCLA Disposal Facility and Evaporation Pond, TFR-71

Appendix DD—Technical and Functional Requirements for the INEEL CERCLA Disposal Facility Control and Integrated Waste Tracking System, TFR-2520

Appendix EE—Comment Resolution Forms

Appendix FF—Permeable Reactive Barrier Decision Analysis, EDF-ER-273

Appendix GG—Leachate Generation Study, EDF-ER-269

Tables

1-1. Engineering drawings for the construction of the ICDF landfill and evaporation pond..... 1-11

1-2. Changes to ICDF RD/RAWP organization. 1-13

ACRONYMS

AASHTO	American Association of State Highway and Transportation Officials
AFC	approved for construction
AOC	area of contamination
ARAR	applicable or relevant and appropriate requirement
ASCE	American Society of Civil Engineers
ASME	American Society for Mechanical Engineers
BLM	Bureau of Land Management
BRA	Baseline Risk Assessment
CAMU	Corrective Action Management Unit
CCL	compacted clay liner
CDR	Conceptual Design Report
CERCLA	Comprehensive Environmental Response, Compensation, and Liability Act
CFR	Code of Federal Regulations
CIDs	construction interface documents
COC	contaminants of concern
CQA	Construction Quality Assurance
DOE	Department of Energy
DOE-ID	Department of Energy Idaho Operations Office
DOE O	Department of Energy Order
EDF	Engineering Design File
EAM	emergency action manager
EPA	Environmental Protection Agency
RE	Environmental Restoration
FFA/CO	Federal Facility Agreement and Consent Order
GCL	geosynthetic clay liner

HASP	Health and Safety Plan
HDPE	high-density polyethylene
HI	hazard index
HWMA	Hazardous Waste Management Act
ICDF	INEEL CERCLA Disposal Facility
IDAPA	Idaho Administrative Procedures Act
IDEQ	Idaho Department of Environmental Quality
INEEL	Idaho National Engineering and Environmental Laboratory
INTEC	Idaho Nuclear Technology and Engineering Center
ITD	Idaho Transportation Department
LCS	leachate collection system
LDRS	leak detection recovery system
MCL	maximum contaminant levels
MEI	maximally exposed individual
NCP	National Contingency Plan
NEA	Nuclear Energy Agency
NFPA	National Fire Protection Association
NOAA	National Oceanic and Atmospheric Administration
O&M	operation and maintenance
OSHA	Occupational Safety and Health Administration
OU	operable unit
P&ID	process and instrumentation diagram
PC	Performance Category
PCB	polychlorinated biphenyl
PICS	process instrumentation and control system
PLN	Plan

QA	quality assurance
QPP	quality program plan
RA	remedial action
RAWP	remedial action work plan
RAOs	remedial action objectives
RCRA	Resource Conservation and Recovery Act
RCT	radiological control technician
RD	remedial design
RD/C	remedial design/construction
RD/CWP	Remedial Design/Construction Work Plan
RD/RA	remedial design/remedial action
RFP	request for proposal
RI/FS	remedial investigation/feasibility study
ROD	Record of Decision
SBL	soil bentonite liner
SOW	Scope of Work
SPC	Specification
SRPA	Snake River Plain Aquifer
SSA	Staging and Storage Area
SSSTF	Staging, Storage, Sizing, and Treatment Facility
TBC	to be considered
TFR	Technical and Functional Requirement
TRU	transuranic
TSCA	Toxic Substances Control Act
UBC	Uniform Building Code
UNEP	United Nations Environmental Program

VDS	vendor data submittals
WAC	Waste Acceptance Criteria
WAG	waste area group
WMP	Waste Management Plan
WP	Work Plan
WPP	Waste Placement Plan

INEEL CERCLA Disposal Facility Remedial Design/ Construction Work Plan

1. INTRODUCTION

In accordance with the Idaho National Engineering and Environmental Laboratory (INEEL) Federal Facility Agreement and Consent Order (FFA/CO) (DOE-ID 1991) between the U.S. Department of Energy (DOE), the U.S. Environmental Protection Agency (EPA), and the Idaho Department of Environmental Quality (IDEQ), hereafter referred to as the Agencies, the DOE submits the following Remedial Design/Construction Work Plan (RD/CWP) for the design and construction of the INEEL CERCLA Disposal Facility (ICDF) at the Idaho Nuclear Technology and Engineering Center (INTEC). Under the current remediation management strategy outlined in the FFA/CO, the location identified for the construction of the ICDF is designated as part of Waste Area Group (WAG) 3, Operable Unit (OU) 3-13 at INEEL.

The RD/CWP activities identified in this work plan, as part of the Comprehensive Environmental Response, Compensation, and Liability Act (CERCLA) process, will proceed in accordance with the signed OU 3-13 Final Record of Decision (ROD) (DOE-ID 1999) and the RD/RA Scope of Work (SOW) (DOE-ID 2000a) for WAG 3, OU 3-13.

This RD/CWP provides the framework for defining the remedial design (RD) requirements, preparing the design documentation, and defining and implementing the construction of the ICDF at INTEC, one of the major components of the selected remedy for the OU 3-13 Group 3, Other Surface Soils. The Agencies and DOE plan to develop operational and management plans in a separate document known as the Remedial Action Work Plan (RAWP). The ICDF Complex RAWP will be developed as a primary document under the FFA/CO, and will be presented to the Agencies for comment and finalization during the summer of 2002.

1.1 Background

The INEEL is a government facility managed by the DOE, located 51.5 km (32 mi) west of Idaho Falls, Idaho, that occupies 2,305 km^2 (890 mi^2) of the northeastern portion of the Eastern Snake River Plain. Facilities at the INEEL are primarily dedicated to nuclear research, development, and waste management. Surrounding areas are for multipurpose use and are managed by the U.S. Bureau of Land Management (BLM). The developed area within the INEEL is surrounded by a 1,295-km^2 (500-mi^2) buffer zone used for cattle and sheep grazing. Communities nearest to the INTEC are Atomic City (south), Arco (west), Butte City (west), Howe (northwest), Mud Lake (northeast), and Terreton (northeast). In the counties surrounding the INEEL, approximately 45% of the land is agricultural, 45% is open land, and 10% is urban. Sheep, cattle, hogs, poultry, and dairy cattle are produced, and potatoes, sugar beets, wheat, barley, oats, forage, and seed crops are cultivated. Private individuals or the U.S. Government own most of the land surrounding the INEEL.

The INTEC, formerly known as the Idaho Chemical Processing Plant, is located in the south-central portion of the INEEL in southeastern Idaho, as shown in Figure 1-1. From 1952 to 1992, operations at INTEC primarily involved reprocessing spent nuclear fuel from defense projects. Liquid waste generated from the reprocessing activities, which ceased in 1992, is stored in several underground storage tanks at INTEC.

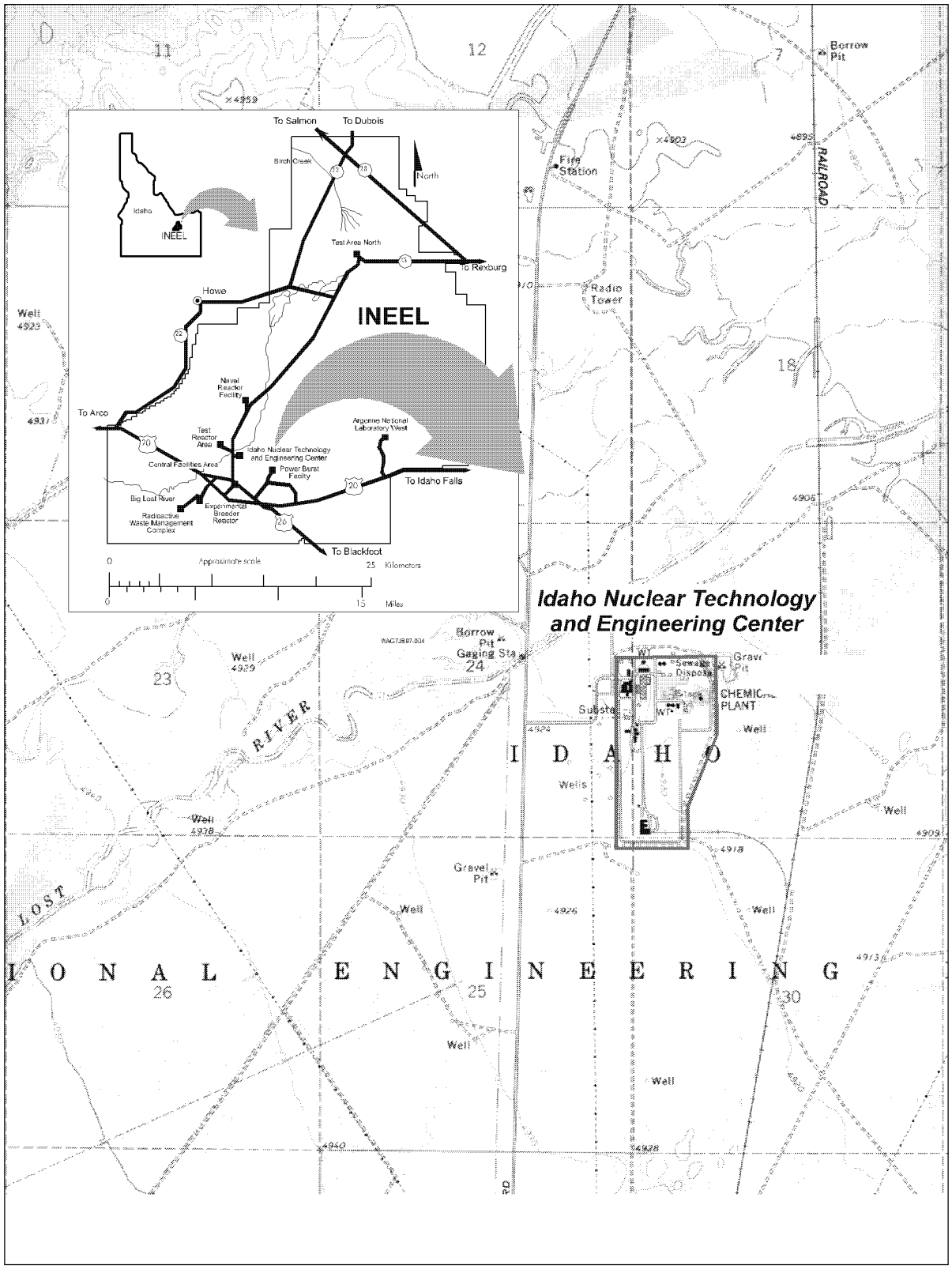

Figure 1-1. Location of INTEC within the INEEL.

The FFA/CO designates INTEC as WAG 3. Identified contaminant release sites at WAG 3 were grouped into several OUs to better manage environmental investigations and expedite the investigations and any required remedial actions (RAs). OU 3-13 was designated in the FFA/CO and Action Plan as the Comprehensive Remedial Investigation/Feasibility Study (RI/FS) (DOE-ID 1997), which culminated with the OU 3-13 ROD. The OU 3-13 ROD provides selected remedies or interim action until final remedy selection for 55 release sites identified at INTEC, which, on the basis of the RI/FS for WAG 3, OU 3-13, were identified as posing a potential risk or threat to human health and/or the environment. Of the 46 other potential release sites, 40 sites are identified in the ROD as "No Action" or "No Further Action." The remaining six sites will be managed under other OUs, WAGs, or INEEL regulatory programs.

The 55 release sites with identified risks greater than 1×10^{-4} or that pose a threat to human health and/or the environment require remedial action to mitigate these risks or threats. The 55 sites were divided into seven groups based on similar media, contaminants of concern (COC), accessibility, or geographic proximity:

- Group 1: Tank Farm Soils
- Group 2: Soils Under Building and Structures
- Group 3: Other Surface Soils
- Group 4: Perched Water
- Group 5: Snake River Plain Aquifer (SRPA)
- Group 6: Buried Gas Cylinders
- Group 7: SFE-20 Hot Waste Tank System.

As part of the selected remedy for Group 3, the ICDF Complex will be constructed at INTEC, as shown in Figure 1-2, to allow on-Site disposal of WAG 3 and other CERCLA-generated wastes at the INEEL. The ICDF landfill will be an engineered facility meeting the substantive requirements of Resource Conservation and Recovery Act (RCRA) Subtitle C design and construction, with a capacity of about 389,923 m^3 (510,000 yd^3) (DOE-ID 1999).

The remedial strategy for Group 3 is described in three primary documents:

- The Staging, Storage, Sizing, and Treatment Facility (SSSTF) RD/CWP describes SSSTF design and construction (DOE-ID 20002g)
- The ICDF RD/CWP describes landfill and evaporation pond design and construction
- The ICDF Complex RAWP will describe operations and management aspects of the ICDF Complex (landfill, evaporation pond, and SSSTF).

A separate plan will be developed for the design and implementation of the remedy for the contaminated Group 3 soils to excavate and transport the Group 3 soils to the ICDF Complex (either directly to the landfill or evaporation pond, or to the SSSTF for treatment prior to disposal).

This RD/CWP and included Title II design documents are for the ICDF landfill and evaporation pond design and construction. Separate construction work plans and design documentation will be

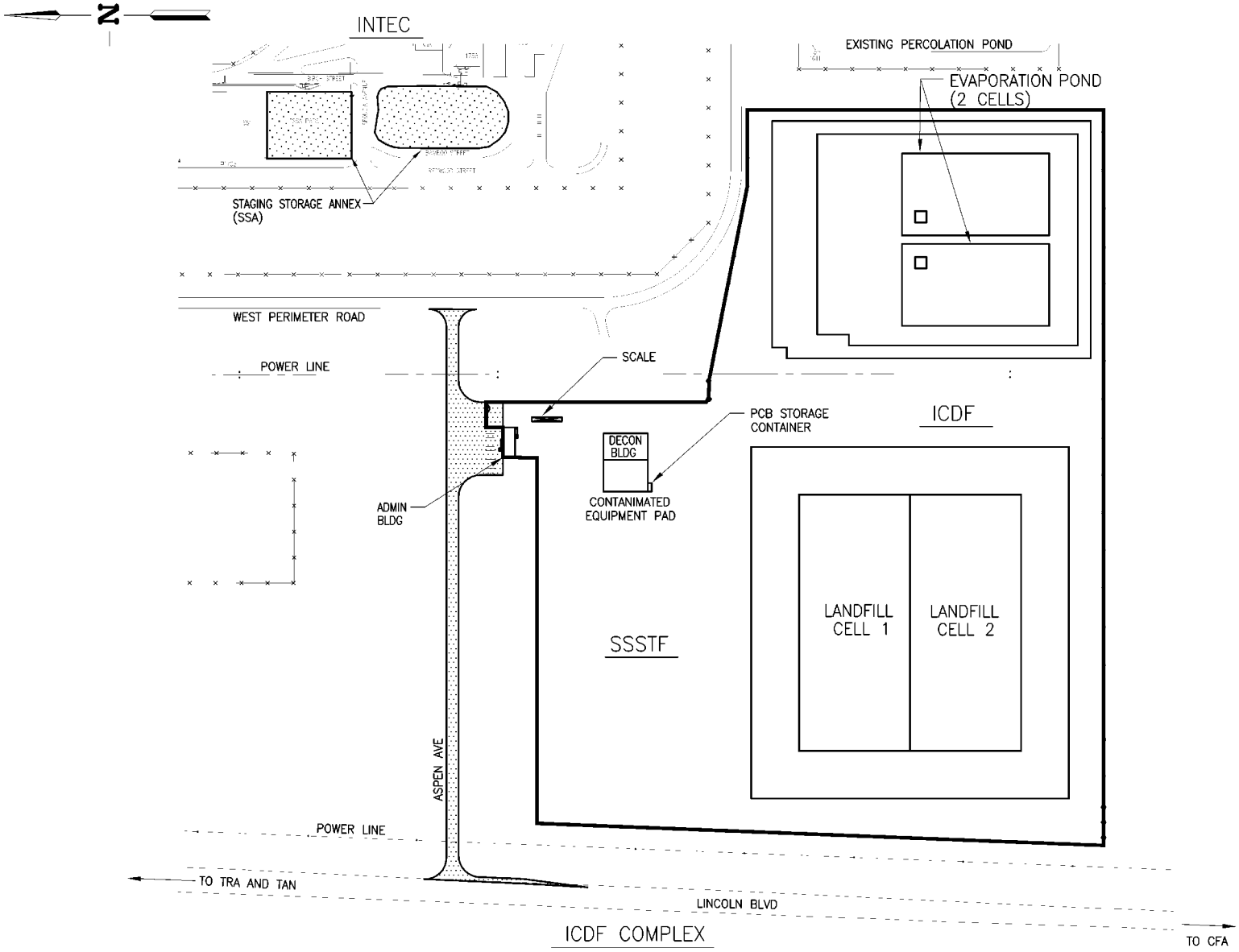

Figure 1-2. Location of the ICDF Complex.

prepared for the SSSTF and the Group 3 soils, in accordance with the OU 3-13 RD/RA SOW (DOE-ID 2000a). The Draft SSSTF RD/RA Work Plan was submitted to the Agencies in August 2001 for FFA/CO review. The ICDF RD/RA Work Plan was submitted to the Agencies in December 2001 for FFA/CO review. In early 2002, the Agencies and the DOE agreed to outline remedial design and construction issues for the SSSTF in a RD/CWP. As a result of this agreement, the ICDF RD/RAWP has also been revised to describe only the design and construction issues associated with building the landfill and evaporation pond. Operational and management issues for both SSSTF and ICDF will be discussed in a Remedial Action Work Plan for the entire ICDF Complex. This ICDF RD/CWP refers to components of the SSSTF RD/CWP, as necessary.

1.2 Selected Remedy

Based on consideration of the requirements of CERCLA, the detailed analysis of alternatives, and public comments, the Agencies selected Removal and On-Site Disposal for Group 3, Other Surface Soils. The ICDF Complex will be constructed under the selected remedy. The ICDF landfill will be engineered to meet the substantive requirements of the Toxic Substances Control Act (TSCA) and RCRA for the purpose of final disposal of wastes.

In addition to accepting WAG 3 CERCLA-generated waste, the ICDF landfill will also be designed to function as an INEEL-wide disposal facility to accommodate the disposal of CERCLA soils and debris from other WAGs. The SSSTF will be the receiving facility for CERCLA wastes for the ICDF Complex. The ICDF Complex will include the design and construction of an evaporation pond, which was designated by the ROD as a Corrective Action Management Unit (CAMU). The evaporation pond will be designed and constructed to treat ICDF landfill leachate, other aqueous wastes generated during operations, and INEEL CERCLA aqueous wastes that meet the ICDF evaporation pond Waste Acceptance Criteria (WAC).

The ICDF landfill will be a modular design, consisting of two cells, with a total capacity of 389,923 m^3 (510,000 yd^3). The first cell, Cell 1, will be constructed first, and construction of Cell 2 will proceed as needed. Contaminated soils will be permanently contained in this engineered facility, which is designed for long-term protection of human health and the environment. Institutional controls will be maintained at the ICDF Complex as long as necessary to ensure long-term protection.

The ICDF landfill and evaporation pond will reduce the overall areal extent of soil, liquid, and debris contamination at INTEC and the INEEL, and will achieve cost savings relative to off-Site disposal, or on-Site management, because the contaminated media will be managed in a central facility. Major elements of the selected remedy relevant to the ICDF landfill and evaporation pond are presented in the RD/RA SOW (DOE-ID 2000a), and are presented here:

1. Construct the ICDF Complex, which will include an engineered landfill meeting the substantive requirements of RCRA Subtitle C, Idaho Hazardous Waste Management Act (HWMA) and polychlorinated (PCB) landfill design and construction requirements.

2. The ICDF Complex will be located within the WAG 3 area of contamination (AOC). Design and operational requirements for the ICDF landfill and evaporation pond include:

    a. Dispose only INEEL on-Site CERCLA wastes meeting the Agency-approved ICDF Landfill WAC, to be developed during the RD, in the ICDF. An important objective of the WAC will be to assure that hazardous substances disposed in the ICDF landfill will not result in exceeding groundwater quality standards in the underlying drinking water of the SRPA, even if the ICDF landfill leachate collection system (LCS) were to fail after closure.

b. Design to have a total capacity of approximately 390,000 m^3 (510,000 yd^3).

c. Engineer to meet Idaho Administrative Procedures Act (IDAPA) 58.01.05.008[a] (40 Code of Federal Regulations [CFR] 264.301) for hazardous waste, 40 CFR 761.75 for PCB, and DOE Order 435.1 for radioactive waste landfill design and operating substantive requirements.

d. Locate in an area meeting hazardous waste, PCB waste, and low-level radioactive waste landfill siting requirements. Through a preliminary evaluation of all the relevant decision criteria, the Agencies have determined the "Study Area" for siting the ICDF landfill and evaporation pond to be the CPP-67 Percolation Ponds and adjacent areas to the west. However, the specific ICDF landfill cell locations will be determined through the completion of a comprehensive geotechnical evaluation of the entire Study Area, which shall be reviewed and approved by the Agencies. Siting criteria for the location of the ICDF landfill and evaporation pond included the following:

   (1) Outside the 100-year floodplain

   (2) Outside of wetland areas

   (3) Not in active seismic zones

   (4) Not in high surface erosion areas

   (5) Not in an area of high historic groundwater table.

e. Construct and designate an evaporation pond as a CAMU in accordance with the substantive requirements of IDAPA 58.01.05.008 (40 CFR 264.552 and 40 CFR 264 Subparts K and CC).

f. Operate, close, and post-close the ICDF Complex in accordance with the substantive requirements of IDAPA 58.01.05.008 (40 CFR 264 Subparts G, F, and N), and maintain site access restrictions and institutional controls throughout the post-closure period.

1.3 Preparatory Design Activities

Initial design activities for the ICDF landfill and evaporation pond were first presented in the Conceptual Design Report (CDR) for the INEEL CERCLA Disposal Facility and Evaporation Pond (DOE-ID 2000b). Geotechnical data to support the CDR was presented in the Geotechnical Report for the Conceptual Design (DOE-ID 2000c). The CDR provided a conceptual design of the ICDF landfill and evaporation pond. Also included in the ICDF CDR were the design criteria, project basis, schedule and

---

a. The IDAPA citations indicated in the ROD were from the 16 series (e.g., 16.01.05.011). Subsequent reorganization of the State of Idaho resulted in the movement of the IDEQ's regulations from the 16 series to the 58 series (e.g., 58.01.05.011). While the IDAPA applicable or relevant and appropriate requirements (ARARs) are noted in this document as the 58 series for clarity and ease of reference, the ARARs were established at the signature of the ROD; any change in the IDAPA ARARs due to the series move (or promulgation of new regulations), is not applicable for the ICDF landfill or evaporation pond remedial action.

acquisition strategy, and project cost estimate. Following Agency review, comment resolution, and incorporation, the CDR was finalized (DOE-ID 2000b).

Following finalization of the CDR, title design was initiated. Title I design activities were initiated by the preparation of the Draft Title I (30%) design package. Following Agency review and comment resolution, the Final Title I (30%) design package was completed and finalized. The documentation developed as part of the Title I design effort is referenced and part of the Title I Master Table of Documents (DOE-ID 2001a).

Subsequent design for early construction activities for excavation of the landfill and evaporation pond, and construction of the test pad resulted in the Early Excavation and Test Pad approved for construction (AFC) design package, which included construction drawings and specifications. The Early Excavation and Test Pad design components were also reviewed by the Agencies; following the resolution and incorporation of comments, the Early Excavation and Test Pad documents were finalized. The documentation developed as part of the Early Excavation and Test Pad AFC design is referenced and part of the Excavation and Test Pad Master Table of Documents (DOE-ID 2001b).

Title design continued with the preparation of the 60% design package, which included several elements requested for further intermediate design by the Agencies. Agency comments on the 60% design package have been resolved and incorporated in the final 60% design package. The documentation developed as part of the 60% design is referenced and part of the 60% Design Components Master Table of Documents (DOE-ID 2001c).

This RD/CWP presents the Title II (90%) design for the ICDF landfill and evaporation pond. It is the culmination of a focused design effort for the ICDF landfill and evaporation pond. Elements of this RD/CWP are described in Section 1.4. In addition to the components identified in Section 1.4, several elements of the design effort have been finalized separately from this RD/CWP, in earlier design documentation phases. These design elements include the following documents:

- "Pond Lining System Equivalency Analysis," (Engineering Design File [EDF]-Environmental Restoration [ER]-312) was finalized as part of the 60% design submittal. The equivalency analysis evaluates the regulatory requirements for the evaporation pond liner system, and evaluates an alternate liner system design using the equivalency approach indicated in the regulations. The equivalency analysis concludes that the proposed alternate liner system is equivalent to the prescriptive liner system in the regulations, and provides several operational benefits. This EDF is not included as a component of this RD/CWP, but is available for information as part of the final 60% design package. During Agency comment resolution and finalization of EDF-ER-312 in the 60% design, it was decided that the proposed evaporation pond liner system would include a 0.9 m (3 ft) operations layer between the liners to serve as frost protection. EDF-ER-312 will not be revised to indicate the new design, which is presented in the design drawings (Appendix Z) and further described in Sections 3.9 and 5.1.2 of this RD/CWP.

- "Waste Placement Mapping Plan," (EDF-ER-322) was finalized as part of the 60% design submittal. The plan evaluates and provides a recommendation regarding how wastes will be mapped and tracked during placement in the ICDF landfill. The plan evaluates two alternative tracking methods currently used at other DOE sites and provides additional information regarding the recommended approach for tracking wastes. This EDF is not included as a component of this RD/CWP, but is available for information as part of the final 60% design package.

- "Evaporation Pond Berm Overtopping Analysis," (EDF-ER-323) was finalized as part of the 60% design submittal. This analysis discusses the procedures and findings for the analysis of wind

setup, wave generation, and wave runup in the east and west ICDF evaporation ponds. This EDF is not included as a component of this RD/CWP, but is available for information as part of the final 60% design package.

1.4 Work Plan Organization

As previously discussed, the remedial action strategy for Group 3 is described in three separate documents. The design and construction tasks for the SSSTF are presented in the SSSTF RD/CWP. This RD/CWP presents the design and implementation strategy for the ICDF landfill and evaporation pond. Operational and management issues for the landfill and evaporation ponds will be discussed in detail as part of the ICDF Complex RAWP, which will be submitted to the Agencies for comment and finalization during the summer of 2002. The ICDF RD/CWP is comprised of several volumes, which are indicated below along with the contents of each volume. The following are brief descriptions of the work plan sections and appendices.

Remedial Design/Construction Work Plan

- Section 1, Introduction, provides the description of this ICDF RD/CWP, describes the background and history of the INEEL, INTEC, and the designation of the ICDF for on-site disposal of INEEL CERCLA wastes, and gives an overview of the selected remedy identified in the OU 3-13 ROD. The section also describes the proposed document strategy adopted by DOE and the Agencies after the ICDF RD/RA Work Plan was submitted in December 2001.

- Section 2, Design Basis, provides an overview of the project components, the design criteria for construction of the ICDF landfill and evaporation pond, related design codes, standards, and applicable documents, ARARs, design assumptions, and quality assurance (QA).

- Section 3, Remedial Design, summarizes the RD of the ICDF landfill and evaporation pond, including descriptions of the physical site, design studies, site preparation, earthwork, liner installation, piping, warning signs and brass corner markers, surface water, erosion protection, construction staging, and groundwater monitoring.

- Section 4, Human Health and Environmental Compliance, provides a discussion of the remedial action objectives (RAOs), ARARs, and the compliance strategy associated with the RD/CWP.

- Section 5, Construction Work Plan, includes the management approach for construction of the landfill and evaporation pond, including the subcontracting plan, the construction work elements, the project schedule and reference to the project cost estimate, field oversight and construction management, inspections, reference to the operation and maintenance (O&M) plan, protocol for construction and field oversight, and references to the waste minimization plan, health and safety plan (HASP), and waste management plan. Section 5 also includes a discussion of the closure of the ICDF landfill and evaporation pond.

- Section 6, Five-Year Review, provides the basis for five-year reviews and addresses associated procedures, protocols, and documents.

- Section 7, References, is a list of referenced material from the body of the RD/CWP. Separate documents included in this RD/CWP, such as EDFs and separate DOE-ID documents, have separate reference sections.

Remedial Design/Construction Work Plan Appendices

Appendix Volume 1 of 5—Design Analyses

- Appendix A, "Leachate/Contaminant Reduction Time Study," EDF-ER-274, provides an analysis of the change in leachate concentration over the 15-year operations period of the ICDF landfill, based on the design inventory.

- Appendix B, "Fate and Transport Modeling Results and Summary Report," EDF-ER-275, provides complete groundwater modeling to support initial development of the landfill WAC.

- Appendix C, "Liner/Leachate Compatibility Study," EDF-ER-278, evaluates the compatibility of the liner materials with the leachate generated by the waste disposed in the ICDF landfill, using experience at similar landfills and published literature.

Appendix Volume 2 of 5—Design Analyses (continued)

- Appendix D, "Evaluation of Geotechnical Investigations Required to Complete Design and Construction," EDF-ER-276, presents the results of an evaluation of existing geotechnical information, which was found to be thorough and complete to prepare the ICDF landfill and evaporation pond design.

- Appendix E, "Seismic Evaluation of Landfill and Evaporation Pond," EDF-ER-282, discusses the methodology that is used to evaluate the stability of the ICDF landfill and evaporation pond under seismic loading. This evaluation is based on information contained in the site-specific seismic design standards established for the INEEL.

- Appendix F, "Subsurface Consolidation Calculations," EDF-ER-266, determines the amount of settlement that is expected to occur in the subsurface soils beneath the landfill. The calculated settlements are used to determine the deformation in the liner system to determine the necessary integrity of the landfill liner system.

- Appendix G, "Slope Stability Assessments," EDF-ER-268, documents the slope stability evaluations that support the design of the ICDF landfill and evaporation pond liner systems. The stability assessments include veneer stability, global stability, and stability after excavation.

- Appendix H, "Landfill Compaction/Subsidence Study," EDF-ER-267, predicts the amount of subsidence in the cover of the ICDF landfill, caused by consolidation of the subsurface soils underlying the landfill, waste material settlement, and settlement in the cover itself. Recommendations for the final slope of the cover, as well as waste compaction recommendations to reduce settlement are also presented.

- Appendix I, "Waste-Soil Design Ratio Calculations," EDF-ER-277, analyzes different types of potential debris that are anticipated to be disposed at the ICDF landfill, and determines the amount of soil that will be required to provide a stable fill to protect the permanent cover system for the landfill.

- Appendix J, "Liner and Final Cover Long-Term Performance Evaluation and Final Cover Life Cycle Expectation," EDF-ER-281, provides the basis for engineering analyses for designing the ICDF landfill liner and cover system. This study also demonstrates compliance with the required liner and cover service life.

- Appendix K, "Landfill Leachate Collection System Design Analysis," EDF-ER-280, includes design parameters for the LCS, such as maximum flow rates through the leachate media and pipes, sump discharges and recirculation piping, drainage layers, sump pumps, and discharge piping to the evaporation ponds.

- Appendix L, "Evaporation Pond Sizing with Water Balance and Make-up Water Calculations," EDF-ER-271, calculates the necessary size of the evaporation ponds based on the maximum expected inflow, while minimizing both pond surface area and make-up water requirements.

- Appendix M, "Hydrologic Modeling of Final Cover," EDF-ER-279, estimates the long-term infiltration rates through the ICDF final cover to determine percolation from the base of the cover. The modeling effort evaluated the performance of the landfill cover by determining surface run-off, infiltration through the upper soil component of the cover system, lateral drainage, and cover defects. Based on the hydrologic modeling presented in this document, the ICDF landfill cover design represents the best technology for minimizing infiltration into the landfill given site-specific climatic conditions.

Appendix Volume 3 of 5—Design Analyses (continued)

- Appendix N, "IDAPA Preliminary Air Screening Results," EDF-ER-315, presents the calculations for the unabated off-Site dose rate ($\mu g/m^3$) to the maximally exposed individual (MEI) resulting from air emissions due to remediation activities at the ICDF Complex. The system being evaluated includes O&M of the ICDF landfill, evaporation pond, and SSSTF.

- Appendix O, "ICDF Complex NESHAP Modeling," EDF-ER-290, presents the modeling methodology and dose rates (in mrem/yr) to the maximally exposed individual (MEI) resulting from radioactive air emissions due to remediation activities at the ICDF landfill and evaporation pond, including operations and management.

- Appendix P, *Waste Acceptance Criteria for ICDF Landfill*, DOE/ID-10865, provides the basis for the quantities of radioactive and hazardous wastes allowable in waste designated for disposal in the ICDF landfill. Compliance with the requirements of this ICDF Landfill WAC will ensure protection of human health and the environment, including protection of the SRPA.

- Appendix Q, *Waste Acceptance Criteria for ICDF Evaporation Pond*, DOE/ID-10866, provides the basis for the quantities of radioactive and hazardous COCs that may be present in the aqueous wastes disposed in the ICDF evaporation pond. Compliance with the requirements of the ICDF evaporation pond WAC will ensure protection of human health and the environment.

- Appendix R, "Screening Level Ecological Risk Assessment," EDF-ER-311, provides risk calculations for ecological receptors and evaluates the ICDF Complex's potential environmental impacts.

- Appendix S, "ICDF Complex Groundwater Monitoring Plan," DOE/ID-10955, provides the ICDF Complex groundwater monitoring approach, both during operations and following closure of the landfill. Samples will be collected under this plan to monitor for releases from the ICDF landfill and evaporation pond.

- Appendix T, "Waste Placement Plan," EDF-ER-286, provides direction for waste placement procedures and operational requirements associated with the landfill.

Appendix Volume 4 of 5—Construction

- Appendix U, "INEEL CERCLA Disposal Facility Test Pad Construction Report," EDF-2899, provides a summary of the test pad construction, performed during calendar year 2001, and evaluates the construction of the test pad against the established construction quality standards.

- Appendix V, "Storm Water Pollution Prevention Plan for the ICDF Landfill and Evaporation Pond," Plan (PLN)-962, provides the approach for storm water control during Stage II construction, and also includes the plan for storm water pollution prevention during the ICDF operations, which includes the landfill and evaporation pond.

- Appendix W, *INEEL CERCLA Disposal Facility Construction Waste Management Plan*, DOE/ID-10958, contains the methods that will be implemented to manage wastes generated during the construction of the ICDF landfill and evaporation pond.

- Appendix X, *INEEL CERCLA Disposal Facility Construction Quality Assurance Plan*, DOE/ID-10851, provides the approach for comprehensive QA during the construction of the ICDF landfill and evaporation pond. The Construction Quality Assurance (CQA) Plan describes the responsibilities and testing requirements for each component of the ICDF landfill and evaporation pond, including, but not limited to, the landfill and evaporation pond liner system, LCS, and evaporation pond.

- Appendix Y, "Technical Specifications for the INEEL CERCLA Disposal Facility," Specification (SPC)-1476, provides the technical specifications for the construction of the ICDF landfill and evaporation pond. The technical specifications include the materials, methods, and workmanship necessary to implement the RD in accordance with the design standards that are contained in this RD/CWP.

- Appendix Z, "INEEL CERCLA Disposal Facility—Drawings," provides the design drawings that have been developed for the construction of the ICDF landfill and evaporation pond. The drawings are listed in Table 1-1 by title and drawing number.

Table 1-1. Engineering drawings for the construction of the ICDF landfill and evaporation pond.

Title	Drawing Number	Sheet Number
Title Sheet, Drawing Index, and Site Location Maps	T-201	1
Abbreviations, Legend, General Notes	T-202	2
General Site/Stockpile Plan	C-201	3
Cell 1 Final Grading Plan	C-202	4
Evaporation Pond Area Final Grading Plan	C-203	5
Grading Sections and Details	C-204	6
Grading Sections and Details	C-205	7
Cell 1 Geosynthetics Liner Systems Plan	H-201	8
Evaporation Ponds Geosynthetics Liner Systems Plan	H-202	9
Liner Systems Sections and Details	H-203	10
Liner Systems Sections and Details	H-204	11
Liner Systems Sections and Details	H-205	12

Table 1-1. (continued).

Title	Drawing Number	Sheet Number
Evaporation Pond Liner Systems Sections and Details	H-206	13
Leachate Piping Plan	P-201	14
Cell 1 Leak Detection/Leachate Collection Systems Plan	P-202	15
Evaporation Ponds Leak Detection/Leachate Piping Systems Plan	P-203	16
Leak Detection/Leachate Collection Sections and Details	P-204	17
Landfill Crest Pad Building Mechanical Plan	P-205	18
Evaporation Pond Crest Pad Building Mechanical Plan	P-206	19
Leak Detect./Leachate Collect. Sections and Details	P-207	20
Piping Details	P-208	21
Leachate Collection System Details	P-209	22
Leachate Collection System Details	P-210	23
Crest Pad Building Plan and Elevations	A/S-201	24
Crest Pad Building Sections and Details	A/S-202	25
Truck Loading Plan Sections and Details	A/S-203	26
Structural Notes and Details	A/S-204	27
Structural Standard Details	A/S-205	28
Overall Electrical Site Plan	E-201	29
Crest Pad Buildings Electrical Power and Lighting Plans	E-202	30
Electrical One-Line Diagrams and MCC Elevations	E-203	31
Electrical Control Diagrams	E-204	32
Landfill Process and Instrumentation Diagram (P&ID)	IN-201	33
Evaporation Pond Process and Instrumentation Diagram (P&ID)	IN-202	34
PICS Block Diagram	IN-203	35
Crest Pad Buildings Control Pnl Els.	IN-204	36
Typical Wiring Diagrams	IN-205	37
Erosion Control Plan	EC-201	38
Cell 2 Excavation Plan	C-301	39
Cell 2 Final Grading Plan	C-302	40
Cell 2 Sections and Details	C-303	41
Final Cover Plan	C-304	42
Cell 1 and 2 Final Cover Sections and Details	C-305	43
Cell 2 Geosynthetics Liner System Plan	H-301	44
Cell 2 Leachate Collection Plan	P-301	45
Cell 2 Leachate Collection Sections and Details	P-302	46

Appendix Volume 5 of 5—Project Management

- Appendix AA, "Project Schedule and Assumptions," provides the project working schedule for construction of the ICDF landfill and evaporation pond. The schedule identifies the proposed schedule for the ICDF Complex RAWP and indicates the date the ICDF Complex is expected to be operational and begin accepting waste.

- Appendix BB, "Detailed Cost Estimate," provides an estimate of the total projected costs for the ICDF landfill and evaporation pond.

- Appendix CC, "ICDF Technical and Functional Requirements—WAG 3 INEEL CERCLA Disposal Facility," TFR-71, presents the Technical and Functional Requirements (TFRs) that have been developed for the ICDF landfill and evaporation pond. Included in this document is a listing of the ICDF ARARs.

- Appendix DD, "Technical and Functional Requirements for the INEEL CERCLA Disposal Facility Control and Integrated Waste Tracking System," TFR-2520, provides the TFRs for the controls, monitoring, and information systems for the ICDF Complex. The system will incorporate the controls designed and installed for the disposal facility and evaporation ponds, and will interface with one of the control rooms at INTEC. The ICDF Complex will have a variety of conditions that will need continuous monitoring and some degree of control. In addition to control and monitoring, the system will need to archive a variety of conditions such as alarms, levels, and flow totals.

- Appendix EE, "Comment Resolution Forms," will document the comments from the Agencies on the Draft and Draft Final Revisions of the RD/CWP, and will also include the final comment resolutions to address each comment

- Appendix FF, "Permeable Reactive Barrier Evaluation Study," (EDF-ER-273) provides the results of an evaluation of the effectiveness of a permeable reactive barrier for use at the ICDF landfill, based on the results of other studies performed in support of the INEEL CERCLA Disposal Facility Title I Design

- Appendix GG, "Leachate Generation Study," (EDF-ER-269) provides the design calculations and assumptions for modeling of leachate generation within the landfill.

The contents of the Appendix volumes have been changed from the previous ICDF RD/RAWP, submitted in December 2001. Table 1-2 gives the current status of these appendices.

Table 1-2. Changes to ICDF RD/RAWP organization.

Appendix Title	ICDF RD/CWP Appendix	ICDF RD/RAWP Appendix
"Leachate/Contaminant Reduction Time Study" (EDF-ER-274)	A	A
"Fate and Transport Modeling Results" (EDF-ER-275)	B	B
"Liner/Leachate Compatibility Study" (EDF-ER-278)	C	C
"Evaluation of Geotechnical Investigations and Calculations Required to Complete Design and Construction" (EDF-ER-276)	D	D

Table 1-2. (continued).

Appendix Title	ICDF RD/CWP Appendix	ICDF RD/RAWP Appendix
"Seismic Evaluation of Landfill and Evaporation Pond"(EDF-ER-282)	E	E
"Subsurface Consolidation" (EDF-ER-266)	F	F
"Slope Stability Assessments" (EDF-ER-268)	G	G
"Landfill Compaction/Subsidence Study" (EDF-ER-267)	H	H
"Waste-Soil Design Ratio Calculations" (EDF-ER-277)	I	I
"Liner and Final Cover Long-Term Performance Evaluation and Final Cover Life Cycle Expectation" (EDF-ER-281)	J	J
"Landfill Leachate Collection System Design Analysis" (EDF-ER-280)	K	K
"Evaporation Pond Sizing with Water Balance and Make-up Water Calculations" (EDF-ER-271)	L	L
"Hydrologic Modeling of Final Cover" (EDF-ER-279)	M	M
"ICDF Technical and Functional Requirements—WAG 3 INEEL CERCLA Disposal Facility" (TFR-71)	CC	N
"NESHAP Modeling for the ICDF Complex" (EDF-ER-290)	O	(from 60% design)
"Technical and Functional Requirements for the INEEL CERCLA Disposal Facility Control and Integrated Waste Tracking System" (TFR-2520)	DD	O
"INEEL CERCLA Disposal Facility Test Pad Construction Report" (EDF-2899)	U	P
"Technical Specifications for the INEEL CERCLA Disposal Facility" (Specification [SPC]-1476)	Y	Q
"INEEL CERCLA Disposal Facility—Drawings"	Z	R
"ICDF Complex Risk Assessment for Workers" (EDF-ER-327)	Not included[a]	S
"Screening Level Ecological Risk Assessment" (EDF-ER-311)	R	(from 60% design)
"IDAPA Preliminary Air Screening Results" (EDF-ER-315)	N	T
"Waste Placement Plan" (EDF-ER-286)	T	U
"Storm Water Pollution Prevention Plan for the ICDF Landfill and Evaporation Pond" (Plan [PLN]-962)	V	V
Detailed Cost Estimate	BB	W
Project Schedule	AA	X
Comment Resolution Forms	EE	Y
INEEL CERCLA Disposal Facility Construction Quality Assurance Plan (DOE/ID-10851)	X	attachment
INEEL Disposal Facility Complex Landfill and Evaporation Pond Operation and Maintenance Plan (DOE/ID-10852)	Not included[a]	attachment
INEEL CERCLA Disposal Facility Construction Waste Management Plan (DOE/ID-10958)	W	attachment

Table 1-2. (continued).

Appendix Title	ICDF RD/CWP Appendix	ICDF RD/RAWP Appendix
Waste Acceptance Criteria for ICDF Landfill (DOE/ID-10865)	P	attachment
ICDF Complex Groundwater Monitoring Plan (DOE/ID-10955)	S	attachment
Waste Acceptance Criteria for ICDF Evaporation Pond (DOE/ID-10866)	Q	attachment
"Health and Safety Plan for INEEL CERCLA Disposal Facility Operations," (INEEL/EXT 01-01318)	Not included[a]	attachment
"Permeable Reactive Barrier Evaluation Study" (EDF-ER-273)	FF	Not included
"Leachate Generation Study" (EDF-ER-269)	GG	Not included

a. DOE has proposed that these operational documents be included in the ICDF Complex RAWP.

2. DESIGN BASIS

2.1 General Description of the Project Components

The project components (support facilities, electrical power, and Title III services) are described below.

2.1.1 Support Facilities

The location of the support facilities is identified in the design drawings (Appendix Z). Support facilities to be used during construction include construction trailer(s), parking, equipment laydown areas, the permanent stockpile area, and temporary stockpile area(s).

2.1.2 Electrical Power

Existing electrical power is available at INTEC. Power will be installed to the SSSTF; power to the ICDF landfill and evaporation pond area will be tied into the SSSTF electrical network.

2.1.3 Title III Services

Title III services are included to provide, on an as-needed basis, engineering support during preconstruction, construction, and construction closeout. Construction interface documents (CIDs) and vendor data submittals (VDS) will be reviewed and addressed. During construction, INEEL representative(s) will assist in resolution of technical issues, support inspection of construction workmanship and specification compliance, and evaluate design modifications as needed.

2.2 Design Criteria

The purpose of the remedial action is to consolidate INEEL CERCLA wastes into one engineered facility to reduce the footprint of contamination across the INEEL. The OU 3-13 ROD requires the design and construction of the ICDF Complex, which includes the ICDF landfill, evaporation pond, and the SSSTF. Design criteria presented in this RD/CWP are for the ICDF landfill and evaporation pond. The RD/CWP for WAG 3 SSSTF addresses the RD and construction actions for the SSSTF (DOE-ID 2002a). Remedial action and operational issues for the entire ICDF Complex (landfill, evaporation pond, and SSSTF) will be addressed in the ICDF Complex RAWP.

This section describes all elements of the design, construction and operation of the ICDF landfills and evaporation pond. However, operational and management elements are only summarized in this document; they will be described in detail in connection with the SSSTF operation and management in the ICDF Complex RAWP. Primary sources for the ICDF landfill and evaporation pond design criteria are listed below:

- DOE-ID, 1999, *Final Record of Decision, Idaho Nuclear Technology and Engineering Center, Operable Unit 3-13,* DOE/ID-10660, Rev. 0, Department of Energy Idaho Operations Office, Idaho Falls, Idaho, U.S. Environmental Protection Agency Region 10, and State of Idaho Department of Health and Welfare.

- DOE-ID, 2000, *Remedial Design/Remedial Action Scope of Work for Waste Area Group 3, Operable Unit 3-13*, DOE/ID-10721, Rev. 1, U.S. Department of Energy Idaho Operations Office, Idaho Falls, Idaho.

- TFR-71, 2002, "Technical and Functional Requirements - WAG 3 INEEL CERCLA Disposal Facility and Evaporation Pond," Rev. 2, U.S. Department of Energy Idaho Operations Office, Idaho Falls, Idaho, May 2002.

- TFR-2520, 2002, "Technical and Functional Requirements for the INEEL CERCLA Disposal Facility (ICDF) Control and Integrated Waste Tracking System," Rev. 0, U.S. Department of Energy Idaho Operations Office, Idaho Falls, Idaho, May 2002.

- DOE-ID, 2000b, *Conceptual Design Report for the INEEL CERCLA Disposal Facility and Evaporation Pond,* DOE/ID-10806, Rev. 0, U.S. Department of Energy Idaho Operations Office, Idaho Falls, Idaho.

- 40 CFR 264.301, 1992, "Standards for Owners and Operators of Hazardous Waste Treatment, Storage, and Disposal Facilities," Subpart N, "Landfills," Section 301, "Design and operating requirements," *Code of Federal Regulations*, Office of the Federal Register, January 1, 1992.

- 40 CFR 761.75, 1999, "Polychlorinated Biphenyls (PCBs) Processing, Distribution in Commerce and Use Prohibitions," Section 75, "Chemical waste landfills," *Code of Federal Regulations,* Office of the Federal Register, July 1, 1999.

- DOE O 435.1, "Radioactive Waste Management," U.S. Department of Energy, August 28, 2001.

The following subsections detail the specific design criteria for the ICDF landfill and evaporation pond.

2.2.1 ICDF Landfill and Evaporation Pond System

The ICDF landfill will be designed and operated to meet the substantive requirements of DOE Order 435.1 for radioactive waste landfill design and operating requirements. Additionally, the ICDF landfill will be engineered to meet IDAPA 58.01.05.008 (40 CFR 264.301) hazardous waste and 40 CFR 761.75 PCB design and operating substantive requirements. The ICDF landfill and evaporation pond will be designed such that cumulative carcinogenic risk from all pathways is less than or equal to 1×10^{-4}. The ICDF landfill will meet or exceed RCRA Subtitle C design standards and the PCB Chemical Waste Landfill design requirements. The ICDF landfill and evaporation pond design will be protective of human and ecological receptors. The ICDF Complex will accept only INEEL on-Site CERCLA wastes meeting the ICDF WACs (DOE-ID 2002b, DOE-ID 2002c, and DOE-ID 2002d).

2.2.2 Siting

The ICDF landfill will be located in an area meeting hazardous waste, PCB waste, and low-level waste landfill siting requirements. The ICDF landfill will meet or exceed the substantive RCRA Subtitle C location standards. Additional specific siting criteria for the location of the ICDF landfill included the following:

- Outside the 100-year flood plain

- Within the WAG 3 AOC

- Outside of wetland areas

- Not in active seismic zones

- Not in high surface erosion zones

- Not in an area of high historic groundwater table.

2.2.3 Landfill

The landfill will be designed to be protective of the SRPA, such that groundwater does not exceed a cumulative carcinogenic risk of 1×10^{-4}, a total HI of 1, or applicable State of Idaho groundwater quality standards (e.g., maximum contaminant levels [MCL]). The ICDF landfill will be closed and capped to prevent exposure of the public to a cumulative carcinogenic risk of 1×10^{-4} and a total HI of 1. The ICDF landfill will have a total capacity of approximately 390,000 m^3 (510,000 yd^3), and will be designed for an operational life of 15 years, a post-closure period of 30 years, and an expected cap design life of 1,000 years. Additional ICDF landfill design requirements are as follows:

- Minimize precipitation run-on and maximize precipitation run-off to effectively reduce infiltration through the contaminated soils and debris

- Minimize subsidence of the waste and the landfill cap

- Ensure that the resulting design is protective of human and ecological receptors

- Ensure that the resulting design is protective of the SRPA.

2.2.3.1 RCRA Subtitle C Landfill Design Criteria. The ICDF landfill will be engineered to meet the substantive RCRA Subtitle C landfill design requirements, which are identified in 40 CFR 264.301. The technical design requirements include requirements for the liner system and leachate collection and removal system. The liner system must include the following:

- A top liner designed and constructed of materials (e.g., a geomembrane) to prevent the migration of hazardous constituents into such liner during the active life and post-closure care period.

- A composite bottom liner, consisting of at least two components. The upper component must be designed and constructed of materials (e.g., a geomembrane) to prevent the migration of hazardous constituents into this component during the active life and post-closure care period. The lower component must be designed and constructed of materials to minimize the migration of hazardous constituents if a breach in the upper component were to occur. The lower component must be constructed of at least 3 ft (91 cm) of compacted soil material with a hydraulic conductivity of no more than 1×10^{-7} cm/sec.

The leachate collection and removal system immediately above the top liner must be designed, constructed, operated, and maintained to collect and remove leachate from the landfill during the active life and post-closure care period. The leachate collection and removal system between the liners, and immediately above the bottom composite liner in the case of multiple leachate collection and removal systems, is also a leak detection system. This leak detection system must be capable of detecting, collecting, and removing leaks of hazardous constituents at the earliest practicable time through all areas of the top liner likely to be exposed to waste or leachate during the active life and post-closure care period. The requirements for a leak detection system are satisfied by installation of a system that is, at a minimum:

- Constructed with a bottom slope of 1% or more.

- Constructed of granular drainage materials with a hydraulic conductivity of 1×10^{-2} cm/sec or more and a thickness of 12 in. (30.5 cm) or more; or constructed of synthetic or geonet drainage materials with a transmissivity of 3×10^{-5} m^2/sec or more.

- Constructed of materials that are chemically resistant to the waste managed in the landfill and the leachate expected to be generated, and of sufficient strength and thickness to prevent collapse under the pressures exerted by overlying wastes, waste cover materials, and equipment used at the landfill.

- Designed and operated to minimize clogging during the active life and post-closure care period.

- Constructed with sumps and liquid removal methods (e.g., pumps) of sufficient size to collect and remove liquids from the sump and prevent liquids from backing up into the drainage layer. Each unit must have its own sump(s). The design of each sump and removal system must provide a method for measuring and recording the volume of liquids present in the sump and of liquids removed.

The owner or operator shall collect and remove pumpable liquids in the leak detection system sumps to minimize the head on the bottom liner. The owner or operator of a leak detection system that is not located completely above the seasonal high water table must demonstrate that the operation of the leak detection system will not be adversely affected by the presence of groundwater.

2.2.3.2 PCB Landfill Design Criteria. Technical Requirements for chemical waste landfills used for the disposal of PCBs and PCB items are established in 40 CFR 761.75. The landfill site shall be located in thick, relatively impermeable formations such as large-area clay pans. Where this is not possible, the soil shall have a high clay and silt content with the following parameters:

- In-place soil thickness of 4 ft, or compacted soil liner thickness of 3 ft

- Permeability (cm/sec), equal to or less than 1×10^{-7}

- Percent soil passing No. 200 Sieve, > 30

- Liquid Limit > 30

- Plasticity Index > 15.

Synthetic membrane liners shall be used when the hydrologic or geologic conditions at the landfill require such a liner in order to provide at least a permeability equivalent to the soils listed in the bullets above. Whenever a synthetic liner is used at a landfill site, special precautions shall be taken to ensure that its integrity is maintained and that it is chemically compatible with PCBs. Adequate soil underlining and soil cover shall be provided to prevent excessive stress on the liner and to prevent rupture of the liner. The liner must have a minimum thickness of 30 mils.

Several operational requirements are also contained in 40 CFR 761.75 that are applicable to the operations of the ICDF landfill. As this section provides design criteria, operational requirements are not addressed.

2.2.4 Evaporation Pond

The evaporation pond will consist of two individual cells. The evaporation pond will be designated and constructed as a CAMU in accordance with the substantive requirements of IDAPA 58.01.05.08 (40 CFR 264.552 and 40 CFR 264 Subpart K and CC).

2.2.5 Leachate Collection System

The leachate system will utilize a primary and secondary liner system with leachate collection and detection systems.

The pumps for the LCS will be accessible for maintenance or replacement.

Several design requirements for the leachate detection system are contained in Section 2.2.3.1, "RCRA Subtitle C Landfill Design Criteria" (40 CFR 264.301). The same LCS requirements apply to the landfill and the evaporation pond.

2.2.6 Landfill Cover

The ICDF landfill closure and post-closure will minimize subsidence of the landfill and its final cover. The cap will be designed to minimize infiltration and run-on and maximize run-off. Minimization of precipitation run-on will effectively reduce infiltration through the contaminated soils and debris. The cover will be designed to protect against inadvertent intrusion for a period of 1,000 years. The final cover will be designed to withstand erosion from a 500-year flood event, as described in EDF-ER-281. The ICDF operations and Waste Placement Plans (WPPs) will be prepared to minimize subsidence of the waste and the landfill cap.

2.2.7 Boundaries and Interfaces

All ICDF Complex activities will take place within the WAG 3 AOC per Figure 1-10 of the OU 3-13 ROD (DOE-ID 1999).

Permanent markers that identify the potential exposure hazards will be installed at all corner boundaries for each cell of the landfill. Land use restrictions, institutional controls, and deed restrictions will be placed on the ICDF landfill and evaporation pond and its adjacent buffer zone to permanently preclude development until unacceptable risk no longer remains at the site.

During the operational phase, a 6-ft woven mesh fence, wall, or similar device will be placed around the site to prevent animals and unauthorized persons from entering. The fence may not be necessary for closure and post-closure.

2.2.8 Operations

The ICDF landfill will be designed to routinely perform waste placement in yearly campaigns that run from March to November, whenever waste conditions are amenable for waste placement. However, the facility will remain in operation the remainder of the year. The ICDF landfill and evaporation pond will be designed to allow operating on a 10-hour shift, four days per week. Void spaces between waste material disposed in the landfill will be filled to minimize future subsidence. The ICDF landfill operations will include the disposal records and the surveyed permanent marker locations in the land use restriction documents. Additional operating requirements include the following:

- Limit disposed wastes to the ICDF landfill and evaporation pond to waste that is acceptable under the ICDF landfill WAC (DOE-ID, 2002b) and the ICDF evaporation pond WAC (DOE-ID, 2002c).

- Limit disposed wastes to the ICDF landfill and evaporation pond to those with contaminant concentrations that will not result in MCL being exceeded in the SRPA.

- Limit disposed wastes to the ICDF landfill to low-level radioactive waste, PCB solids, hazardous, and mixed low-level radioactive waste.

- Treat waste (soils, debris, and treatment residues) on-Site as necessary to meet the landfill WAC (DOE-ID 2002b) prior to disposal.

- Treat waste (soils, debris, and treatment residues) originating from outside the WAG 3 AOC to comply with the land disposal requirements specified in IDAPA 58.01.05.011 (40 CFR 268 and 40 CFR 268.49) as applicable. Those WAG 3 wastes that have triggered placement must also meet this requirement.

- Minimize leachate generation from the ICDF landfill.

2.2.9 Health and Safety

The ICDF Complex will be designed to provide health and safety protection in accordance with 29 CFR 1910, "Occupational Safety and Health Standards." Support buildings within the ICDF Complex will also be designed in accordance with the National Fire Protection Association (NFPA) 101 "Life Safety Code," and the Uniform Building Code (UBC 1997).

2.2.10 Waste Management

Only INEEL on-Site CERCLA wastes meeting the ICDF landfill or evaporation pond WAC (DOE-ID 2002b; DOE-ID 2002c) will be disposed in the ICDF landfill or evaporation pond. Wastes will be limited to low-level radioactive, PCB solids, hazardous, and mixed low-level waste. Hazardous substances disposed in the ICDF landfill will not result in exceeding groundwater quality standards in the underlying groundwater aquifer, even if the ICDF landfill LCS were to fail after closure.

2.2.11 Operating Environment and Natural Phenomena

With respect to natural phenomena hazards (seismic, wind, and flood), the ICDF landfill and evaporation pond will be categorized as Performance Category (PC)-1, as defined by DOE-STD-1020 and 1021. Seismic design will be performed using UBC procedures.

2.2.12 Civil, Architectural, and Structural

A 100-m (328-ft) buffer zone will be maintained as part of the exclusion area around the capped area. Surface drainage will be diverted away from the ICDF landfill and evaporation pond. Excavation of rock should not be included as part of the design, as borings have identified the depth to bedrock as approximately 10.7 to 16.5 m (35 to 54 ft) deep (DOE-ID 2000b). The landfill and evaporation pond excavations will supply necessary fill material. Disturbed areas adjacent to the ICDF site and any stockpiles will be revegetated to prevent erosion and provide sediment and dust control.

The crest pad buildings, which will provide an enclosed area protected from the elements for sampling and maintaining leachate pumps, will be designed and constructed in accordance with the UBC.

The facility will be an insulated, engineered metal building system classified as Type II-N construction with metal wall panels and a standing seam metal roof. The crest pad buildings will be designed for dead, live, snow, and wind loads in accordance with American Society of Civil Engineers (ASCE) 7-95 and the DOE-ID standards (DOE-ID 2000d).

Reinforced, cast-in-place concrete foundations will be provided for the crest pad buildings consisting of spread footings, column piers, grade beams, and a slab-on-grade floor.

2.2.13 Mechanical

The crest pad buildings will have radiant-type unit heaters for freeze protection and personnel comfort during leachate sampling operations.

2.2.14 Fire Protection

The ICDF landfill and evaporation pond will be provided an underground fire main by connecting to the SSSTF utility fire supply line. The ICDF landfill and evaporation pond will have fire hydrants placed for easy access and adequate fire hose lay down. Fire extinguishers will be provided in each crest pad building. The ICDF landfill and evaporation pond crest pad buildings will be equipped with fire alarm, voice paging, and evacuation systems.

2.2.15 Electrical

The ICDF landfill and evaporation pond area will be equipped with electrical power capabilities. The utilities for the ICDF landfill and evaporation pond area will be supplied by tie-in to the SSSTF utilities. Power for the ICDF landfill and evaporation pond crest pad buildings will be supplied from the SSSTF substations via underground duct bank.

The ICDF landfill and evaporation pond areas will be provided with a ground system. Any metal underground piping systems, the rebar in the foundation, and the metal frame of the crest pad buildings will be tied to the ground system.

Lighting will meet the recommendations of the current Illumination Engineering Society. Nonglare fluorescent fixtures will supply light in the crest pad buildings. Metal halide fixtures mounted on poles will provide exterior area lighting.

2.2.16 Closure

The ICDF landfill closure and post-closure will meet or exceed substantive RCRA Subtitle C closure and post-closure requirements, in accordance with substantive requirements of IDAPA 58.01.05.008 (40 CFR 264.310[a][1][2][3][4][5] and 40 CFR 264.310[b][1][4][5][6]). The ICDF landfill will be capped and the evaporation pond will be either clean closed or capped. Site access restrictions and institutional controls will be maintained throughout the post-closure period. Closure requirements will include the following:

- Access restrictions to prevent intrusions into the closed area, including the creation of a buffer zone surrounding the capped ICDF landfill and supporting structures.

- Access controls, monitoring, and maintenance will remain in place for as long as the contents of the landfill remain a threat to human health or the environment if uncontrolled.

- Meet the substantive requirements of RCRA Subtitle C closure and post closure care requirements specified in IDAPA 58.01.05.008 (40 CFR 264.310[a][1][2][3][4][5] and 40 CFR 264.310[b][1][4][5][6]).

- Ensure that the final cover is designed to serve as an intrusion barrier for a period of at least 1,000 years.

- Minimize subsidence of the landfill and its final cover.

- Place easily located permanent markers at all corner boundaries for each cell of the landfill that identify the potential exposure hazards.

- Place permanent land use restrictions, zoning restrictions, and deed restrictions on the ICDF landfill and evaporation pond and its adjacent buffer zone to permanently preclude industrial or residential development until unacceptable risk no longer remains at the site.

- Include the disposal records and surveyed permanent marker locations in the land use restriction documents.

Closure strategies will be described in detail in the ICDF Complex RAWP to be submitted in the summer of 2002. They are also explained in Section 5.14 of this RD/CWP.

2.3 DOE Related Codes, Standards, and Documents

The following national standards, codes, and regulations, subtier standards, code and regulations and site-specific documents are used as the design and operating basis for the ICDF landfill and evaporation pond:

- 10 CFR 830.120, 1999, "Nuclear Safety Management," Section 120, "Quality assurance requirements," *Code of Federal Regulations*, Office of the Federal Register, January 1, 1999.

- 10 CFR 835, 1999, "Occupational Radiation Protection," *Code of Federal Regulations*, Office of the Federal Register, January 1, 1999.

- 29 CFR 1910.120, 1998, "Occupational Safety and Health Standards," Section 120, "Hazardous waste operations and emergency response," *Code of Federal Regulations,* Office of the Federal Register, July 1, 1998.

- 29 CFR 1926.65, 1999, "Safety and Health Regulations for Construction," Section 65, "Hazardous waste operations and emergency response," *Code of Federal Regulations*, Office of the Federal Register, July 1, 1999.

- ASME NQA-1, 1997, "Quality Assurance Requirements for Nuclear Facility Applications," American Society for Mechanical Engineers.

- DOE-ID, 1991, *Federal Facility Agreement and Consent Order for the Idaho National Engineering Laboratory*, U.S. Department of Energy Idaho Operations Office, U.S. Environmental Protection Agency Region 10, State of Idaho Department of Health and Welfare.

- DOE-ID, 1999, *Final Record of Decision, Idaho Nuclear Technology and Engineering Center, Operable Unit 3-13,* DOE/ID-10660, Rev. 0, Department of Energy Idaho Operations Office, Idaho Falls, Idaho, U.S. Environmental Protection Agency Region 10, and State of Idaho Department of Health and Welfare.

- DOE-ID, 2000b, *Conceptual Design Report for the INEEL CERCLA Disposal Facility and Evaporation Pond,* DOE/ID-10806, Rev. 0, U.S. Department of Energy Idaho Operations Office, Idaho Falls, Idaho.

- DOE O 232.1, "Environmental, Safety, and Health Reporting," U.S. Department of Energy, September 30, 1995.

- DOE O 232.1A, "Occurrence Reporting and Processing of Operating Information," U.S. Department of Energy, August 1, 1997.

- DOE O 414.1, "Quality Assurance," U.S. Department of Energy, November 24, 1998.

- DOE O 420.1, "Facility Safety," U.S. Department of Energy, November 22, 2000.

- DOE O 435.1, "Radioactive Waste Management," U.S. Department of Energy, August 28, 2001.

- DOE O 440.1A, "Worker Protection Management for DOE Federal and Contractor Employees," U.S. Department of Energy, March 27, 1998.

- DOE O 470.1, "Safeguards and Security Programs," U.S. Department of Energy, September 28, 1995.

- DOE O 5400.5, "Radiation Protection of the Public and the Environment," U.S. Department of Energy, January 7, 1993.

- DOE O 5480.4, "Environmental Protection, Safety, and Health Protection Standards," U.S. Department of Energy, January 7, 1993.

- EPA, 2000, *Requirements for Quality Assurance Project Plans*, EPA QA/R-5, U.S. Environmental Protection Agency.

- TFR-71, 2002, "Technical and Functional Requirements - WAG 3 INEEL CERCLA Disposal Facility and Evaporation Pond," Rev. 2, U.S. Department of Energy Idaho Operations Office, Idaho Falls, Idaho, May 2002.

- TFR-2520, 2002, "Technical and Functional Requirements for the INEEL CERCLA Disposal Facility (ICDF) Control and Integrated Waste Tracking System," Rev. 0, U.S. Department of Energy Idaho Operations Office, Idaho Falls, Idaho, May 2002.

2.4 Engineering Standards

The following engineering standards are applicable to the ICDF landfill and evaporation pond design. In addition, Appendix Y provides the technical specifications for the ICDF landfill and evaporation pond construction. These specifications identify additional applicable testing and standard specifications. Relevant engineering standards that were key in the design process include the following:

- DOE-ID, 2000d, *Architectural Engineering Standards*, Rev. 27, U.S. Department of Energy Idaho Operations Office, Idaho Falls, Idaho.

- ITD, 1999, "Standard Specifications for Highway Construction," State of Idaho Transportation Department, Division of Highways, 1999.

- UBC, 1997, "Uniform Building Code," International Conference of Building Officials, April 1997.

- ASCE 7-95, "Minimum Design Loads for Buildings and Other Structures," American Society of Civil Engineers.

- AASHTO, "Geotextile Specification for Highway Applications," M-288, American Association of State Highway and Transportation Officials, latest edition.

- NFPA 70, 2001,"National Electrical Code," National Fire Protection Association, August 2, 2001.

- NFPA 101, 2000, "Life Safety Code," National Fire Protection Association, February 2000.

- NFPA 780, 2000, "Standard for Installation of Lightning Protection Systems," National Fire Protection Association, February 2000.

2.5 Environmental and Safety Requirements

The ROD outlines ARARs for the design, construction, operation, and post-closure of the ICDF landfill and evaporation pond. Action-specific ARARs address all aspects of ICDF landfill and evaporation pond operation. Chemical-specific ARARs primarily identify the methods for characterizing hazardous wastes and managing hazardous waste-contaminated soils. Action-specific requirements for PCB landfills and other design strategies are included in the ARARs. Location-specific ARARs are applicable for the ICDF landfill and evaporation pond, although it is anticipated that no special requirements will be triggered because the area is sited in a previously undisturbed area, and has been surveyed for archeological and cultural resources and received the appropriate clearances. Section 4 of this RD/CWP further addresses the ICDF landfill and evaporation pond ARARs. Table 3.1.4-1 in TFR-71 (Appendix CC) outlines the ARAR compliance strategy for the ICDF landfill and evaporation pond.

The ARARs also outline safety requirements as identified in DOE Orders 435.1 and 5400.5. Additional health and safety requirements are identified in the ICDF Health and Safety documents (INEEL 2002a and b).

2.6 Internal Procedures

Titles I, II, and III design activities are performed in compliance with the applicable INEEL internal procedures. The applicable internal procedures for this project are those identifying requirements in the following areas:

- Engineering design

- Emergency preparedness and management

- Environmental management

- Fire protection
- Management systems
- Occupational safety and health
- Radiological protection
- Security
- Environmental restoration
- Waste management
- Conduct of maintenance/conduct of operations
- Quality.

2.7 General Design Assumptions

The design assumptions for the ICDF landfill and evaporation pond were identified in the RD/RA SOW (DOE-ID 2000a), and in the development of the project technical and functional requirements (TFR-71). Relevant design assumptions are as follows:

- The ICDF Complex will be located within the WAG 3 AOC.
- Waste placement at the ICDF landfill will occur 10 hours per day and four days per week.
- The ICDF landfill and evaporation pond administrative area will be combined with the SSSTF administrative area.
- Independently generated centralized stand-by power will not be required.
- ICDF landfill and evaporation pond area utility connections will be via SSSTF utility connections.
- The ICDF landfill will routinely perform waste placement in yearly campaigns that begin in March and end in November; however, the facility will be operational the remainder of the year. Waste monitoring and management operations will be required year-round.
- An operational period of 15 years was assumed for the ICDF landfill, followed by a 30-year post-closure period.
- Groundwater monitoring will be conducted in accordance with the groundwater monitoring plan (DOE-ID 2002e).
- Completion of the ICDF landfill and evaporation pond and approval to begin operations will occur prior to the start of Group 3 soil removal actions at OU 3-13.
- The specific gravity for soil is 2.65.

- The average annual rainfall at the site was assumed to be approximately 8 in./year (NOAA 1989).

- The ICDF landfill and evaporation pond will be designed for a design basis earthquake that is equivalent to an earthquake event with a return period of 10,000 years.

- Site access restrictions and institutional controls will be maintained throughout the post-closure period.

2.8 Specific Design Assumptions

In addition to the general ICDF landfill and evaporation pond assumptions from the RD/RA SOW and TFR-71 outlined above, design-component specific design assumptions, identified in the following subsections, were also addressed.

2.8.1 Leachate Collection System

- The LCS will operate to prevent backup into the waste layer and maintain leachate at allowable levels.

2.8.2 ICDF Landfill

- A clay liner will be designed and constructed under 100% of the landfill area.

- Gas vents in the landfill will not be required, as significant quantities of organic wastes will not be disposed in the ICDF landfill.

- The ICDF landfill will consist of two separate waste disposal cells, with the second cell constructed after waste placement has begun in the first cell, based on the expected waste placement schedule in the first cell.

- The calculated recharge rate for the final cover is zero net recharge to the landfill. A recharge rate, calculated in EDF-ER-279, has been selected as the maximum design recharge rate.

2.8.3 ICDF Evaporation Pond

- For the purpose of evaporation pond sizing, active storage in the evaporation pond will be required to handle up to three years in a row of maximum leachate production. These would be concurrent with the worst-case precipitation years.

- Leachate will not contain constituents such as scum or oil that could further lower evaporative rates.

2.8.4 Waste Acceptance and Waste Management

- Waste exceeding 10 nCi/g transuranic (TRU) constituents will not be disposed to the ICDF landfill.

- A WAC will be developed establishing requirements for the ICDF landfill disposal cells; the landfill WAC is included as Appendix P to this RD/CWP.

- A WAC will be developed for the evaporation pond; the evaporation pond WAC is included Appendix Q to this RD/CWP.

- Bulk waste material will go through an administrative and validation process at the ICDF Complex that includes weighing, profiling, verification, acceptance, QA, and database management before the material will proceed to the ICDF landfill and evaporation pond.

- Waste originating outside the WAG 3 AOC will be treated to comply with the land disposal requirements in IDAPA 58.01.05.11 (40 CFR 268 and 40 CFR 268.49). Certain wastes within the WAG 3 AOC will also need treatment, as required by the ROD (DOE-ID 1999).

- Waste exceeding specified sizes in the WAC may be accepted by exception, but will require special procedures and authorizations.

- Steel boxes of waste disposed in the landfill are assumed to be completely filled and, therefore, incompressible.

- Waste arriving at the ICDF Complex will be limited to one waste profile per container.

- Waste generators will provide an approved waste profile for each waste stream prior to shipping the waste to the ICDF Complex.

- Waste will meet the ICDF Complex WACs (DOE-ID 2002b, DOE-ID 2002c, and DOE-ID 2002d).

- The wastes managed in the pond will be mixed wastes, and are therefore eligible for a 40 CFR 264 Appendix CC exemption for CERCLA waste streams.

- The ICDF Complex will be considered an "on-Site" facility for the purpose of INEEL CERCLA waste disposal.

- No debris will be placed in the 5 ft of wastes immediately above the operations layer, in the 5 ft of wastes below the final waste elevation, and in the 50 ft of wastes adjacent to the sides of the landfill.

- Disposal of debris has been based on spreading debris out to allow complete soil coverage and thus rely on proper compaction of soil for supporting cap and not on strength of debris.

- Wooden boxes will be collapsed during landfill operations.

- Building debris was assumed to be in pieces that could be placed flat in the landfill and not a tangled mass that would be compressible as additional fill is placed.

- Compaction of debris, except for drums, will be performed with a vibratory compactor and not small, hand-operated equipment.

2.9 Quality Assurance

Two QA plans have been developed to evaluate the construction of the ICDF landfill and evaporation pond, based on the design requirements. The *INEEL CERCLA Disposal Facility Construction Quality Assurance Plan for Excavation and Constructing and Testing of Clay Liner and Test Pad* (DOE-ID 2001d) was developed to ensure construction quality during the early excavation and test pad construction, conducted during calendar year 2001. *The INEEL CERCLA Disposal Facility Construction Quality Assurance Plan* (DOE-ID 2002f), provided as an attachment to this RD/CWP, was developed to

ensure the remaining ICDF landfill and evaporation pond construction activities are conducted in accordance with the design.

The current facilities and systems planned for the ICDF landfill and evaporation pond are identified as "low safety consequence." Consequently, the ICDF landfill and evaporation pond have been given a "Quality Level 3" designation.

In the development of the ICDF Construction Quality Assurance Plan, the following quality-assurance related codes were evaluated, and are applicable to the design of the ICDF landfill and evaporation pond as best management practices:

- EPA, 1995, *Quality Assurance and Quality Control for Waste Containment Facilities*, EPA/600/SR-93/182, U.S. Environmental Protection Agency.
- EPA, 2000, *Requirements for Quality Assurance Project Plans*, EPA QA/R-5, U.S. Environmental Protection Agency.
- 10 CFR 830.120, 1999, "Nuclear Safety Management," Section 120, "Quality assurance requirements," *Code of Federal Regulations*, Office of the Federal Register, January 1, 1999.
- ASME NQA-1, 1997, "Quality Assurance Requirements for Nuclear Facility Applications," American Society for Mechanical Engineers.
- DOE O 414.1, "Quality Assurance," U.S. Department of Energy, November 24, 1998.

Additionally, an ICDF Complex Quality Program Plan (QPP) (PLN-873) has been developed that will govern the QA program for the ICDF Complex. The ICDF Complex QPP establishes QA requirements for the SSSTF, landfill, and evaporation pond. The QPP encompasses all activities during the completion of the design, construction, and initial operation testing. The QPP may be revised in the future, depending up an evaluation of the document before the start of continuous ICDF Complex operations.

3. REMEDIAL DESIGN

This section describes the RD for the ICDF landfill and evaporation pond, which was developed in accordance with the design basis presented in Section 2 of this RD/CWP. The specifications and technical and design drawings are presented in Appendices Q and R, respectively. The RD of the components of the ICDF landfill and evaporation pond are described in the following subsections.

3.1 Project Site

The site selected for the construction of the ICDF landfill and evaporation pond, shown previously in Figure 1-2, is shown in detail in the design drawings Appendix Z. The site selection was based on several siting criteria, documented in Section 2 of this RD/CWP. The selected site was presented in the ICDF CDR (DOE-ID 2000b), which utilized geotechnical information presented in the ICDF Geotechnical Report for the CDR (DOE-ID 2000c) for final siting selection. Figure 3-1 depicts the general results of the geotechnical investigation. The north boundary of the ICDF landfill forms the south boundary of the SSSTF. The overall site orientation will facilitate the expansion of the ICDF landfill (Cell 2), as it becomes necessary. The site selection also effectively joins SSSTF and ICDF landfill and evaporation pond operations through adjacent siting.

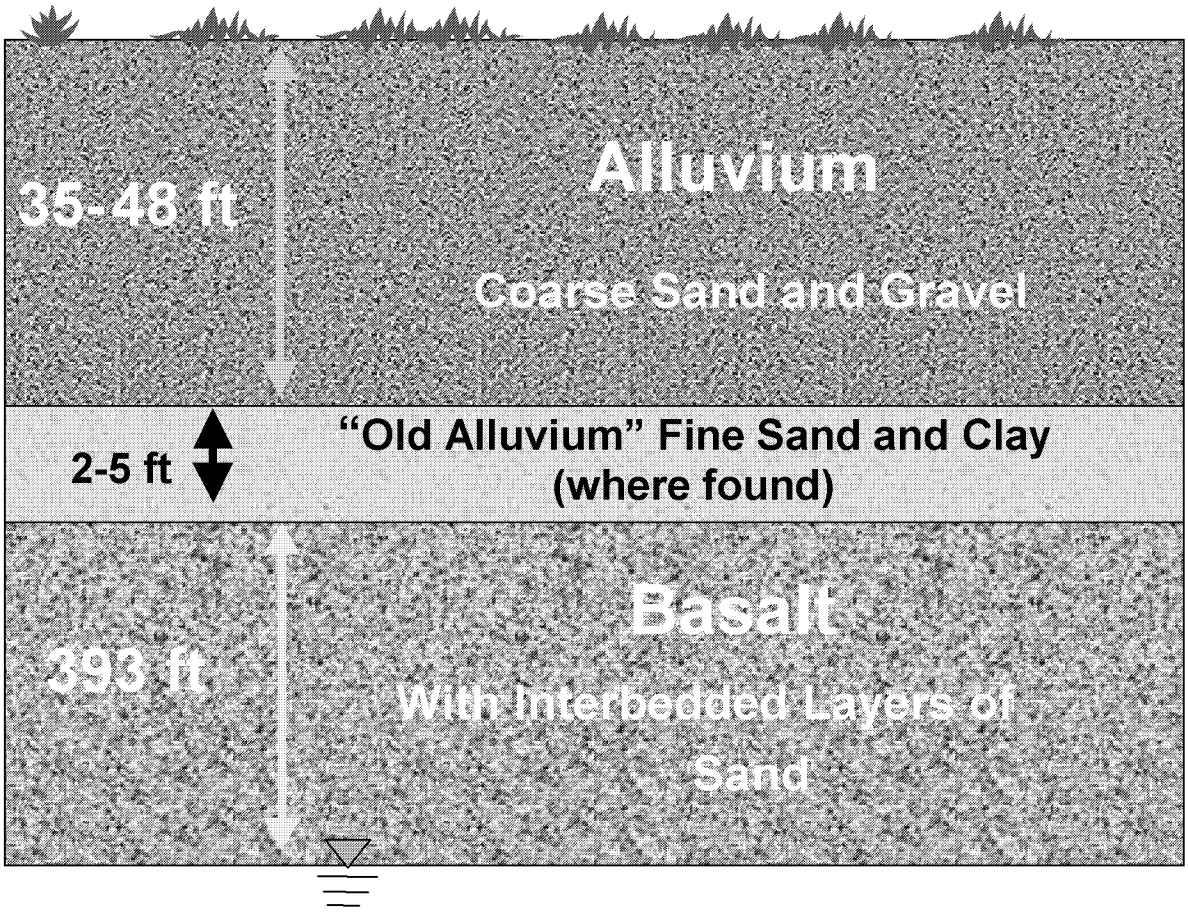

Figure 3-1. Generalized lithology of the ICDF landfill site.

3.2 Physical Site Description

The site selected for the ICDF Complex (shown in Figure 1-2 and the design drawings) is adjacent to Lincoln Boulevard and situated at the southwest corner of the INTEC facility, outside the facility fence. The SSSTF is the northernmost Complex component, directly to the west of the INTEC facility fence. To the south of the SSSTF is the ICDF landfill, which is composed of two cells. Cell 1, the northernmost cell, will be constructed first. Cell 2 is immediately adjacent to Cell 1, to the south, and will be constructed when Cell 1 nears or has reached capacity. To the east of the landfill is the evaporation pond, which is also composed of two cells, referred to as the east and west ponds. The evaporation pond is directly south of the INTEC facility fence, and also sits just west of the existing INTEC percolation ponds. Two crest pad buildings will be constructed to provide shelter to leachate transfer equipment and personnel that will conduct leachate sampling. One crest pad building, located on the northern side of the landfill, will be for the landfill; the other, located on the northern side of the evaporation pond, will be for the evaporation pond. Fencing will be maintained around the ICDF Complex to provide security for the components and control of the waste handling practices that take place. The proximity of the ICDF Complex to the INTEC facility allows for utilities to be extended to serve the SSSTF and the ICDF landfill and evaporation pond.

The location of the ICDF Complex allows for easy access from Lincoln Boulevard, the main INEEL road between facilities. This will allow controlled yet straightforward access to the ICDF Complex components, as needed, for WAG waste management.

During the 2001 field season, several ICDF construction activities were performed as part of the Early Excavation and Test Pad effort, which was conducted in accordance with the AFC design documentation, part of the Excavation and Test Pad Master Table of Documents (DOE-ID 2001b). The following activities were performed that have altered the physical site description, in preparation for the ICDF landfill and evaporation pond construction:

- Cleared and grubbed Rye Grass Flats, the location for the permanent stockpile, and the landfill and evaporation pond sites.
- Constructed a new haul road to Rye Grass Flats.
- Performed subgrade preparation for the evaporation pond.
- Constructed a preliminary test pad at Rye Grass Flats to determine what equipment types meet compaction requirements.
- Constructed a test pad near the ICDF landfill to determine what equipment types meet compaction requirements. The test pad construction included lift placement, compaction, and testing of the lifts.
- Constructed the embankments for the ICDF evaporation pond and constructed the two evaporation pond cells.
- Excavated the ICDF landfill Cell 1.
- Installed site perimeter fencing.
- Revegetated disturbed areas.

The Early Excavation and Test Pad construction work prepared the site for subsequent ICDF landfill and evaporation pond construction activities that will begin in 2002.

3.3 Design Calculations/Studies

In addition to the project specifications and design drawings contained in Appendices Y and Z, respectively, another significant element of the design are the design analyses that have been performed to support this RD/CWP. Appendix Volumes 1 through 3 contain the ICDF landfill and evaporation pond design analyses that have been prepared to support the Title II design. A summary of the design analyses is presented in Section 1.4 of this RD/CWP. Additionally, several other design calculations and studies have been previously finalized at earlier stages of Title II design work. These design elements, in the form of EDFs, are described in Section 1.3. The design analyses provide the technical support for the design presented in this RD/CWP. Specific elements of the design reference individual design analyses, as appropriate.

3.4 Site Preparation

The areas directly associated with the ICDF landfill and evaporation pond construction will be cleared of vegetation in accordance with Specification 02200, "Site Preparation" (SPC-1476). Most of the site clearing will be performed as part of the early excavation and test pad construction, completed during calendar year 2001.

3.5 Construction Staging

A laydown area and stockpile area will be necessary at the ICDF landfill and evaporation pond site to stage equipment and materials close to the work. The staging areas will be located so the noncontaminated materials and equipment operate in the work areas isolated from contaminated materials and equipment. Areas identified for staging are provided in the design drawings (Appendix Z).

3.6 Earthwork

All earthwork at the ICDF landfill and evaporation pond involving excavation and placement of fill materials will be graded to slope away from both the landfill and evaporation pond, to encourage drainage away from the excavations during construction, and from the disposal cells and evaporation pond during operations. Earthwork for the landfill, evaporation pond, and borrow areas will be conducted in accordance with Specifications 02315, "Fill and Backfill," 02316, "Excavation," 02317, and "Borrow Area Excavation" (SPC-1476).

All areas that are disturbed by earthwork activities during construction will be revegetated in accordance with Specification 02920, "Reclamation and Revegetation" (SPC-1476). Seed mixtures, application rates, fertilizers, and application dates specified are designed to provide INEEL native species for the revegetation, and are placed at optimum time with the necessary materials.

Standard dust control measures have been included in the design. The use of water and stopping work during periods of high winds will all be employed during construction.

Some elements of the earthwork design were finalized in the Early Excavation and Test Pad AFC design documents. Elements of the earthwork have been completed during calendar year 2001.

3.6.1 ICDF Landfill

Earthwork at the ICDF landfill consists of the excavation of each of the cells, as shown in the design drawings (Appendix Z). The design for both cells is presented in this RD/CWP; however, construction of the cells will follow a phased approach. Cell 1 will be constructed first, and Cell 2 will be constructed as Cell 1 nears or reaches capacity, or when other project considerations indicate construction should be initiated. Final grading surrounding the landfill will be completed according to the drawings (Appendix Z). Revegetation will be in accordance with Specification 02920 (SPC-1476).

3.6.2 Leachate Collection System

Earthwork for the LCS consists of excavating the trenches and sumps necessary for the LCS, as shown in the design drawings (Appendix Z). Disturbed areas will be revegetated in accordance with Specification 02920 (SPC-1476).

3.6.3 ICDF Evaporation Pond

Earthwork at the ICDF evaporation pond consists of the excavation of each of the evaporation pond cells, as shown in the design drawings (Appendix Z). Final grading surrounding the evaporation pond will be completed according to the drawings (Appendix Z). Revegetation will be completed in accordance with Specification 02920 (SPC-1476).

3.6.4 ICDF Crest Pad Building

Earthwork for the crest pad buildings consists of excavation and grading necessary for placement of the buildings' foundations. Earth surrounding the crest pad buildings will be sloped away from the crest pad buildings, and the crest pads will be placed at the highest finish elevation surrounding the landfill or evaporation pond, respectively.

3.6.5 Final Cover

Earthwork for the final ICDF landfill cover will involve the placement of geologic materials and geomembranes, as shown in the design drawings (Appendix Z). Exact material specifications and design for the final cover are presented in the design drawings (Appendix Z) and design specifications (SPC-1476). More detailed design information for the final cover is presented in Section 3.12 of this RD/CWP.

3.7 Landfill

The ICDF landfill is designed, and will be operated, to meet the substantive requirements of DOE Order 435.1 for radioactive waste landfill design and operating requirements. The landfill is engineered to meet substantive requirements of IDAPA 58.01.05.008 (40 CFR 264.301) hazardous waste, also referred to as RCRA Subtitle C, and 40 CFR 761.75, PCB landfill design. Technical elements necessary to meet design requirements for a RCRA Subtitle C and PCB landfill are summarized in Section 2, Design Basis.

The ICDF landfill has been designed such that cumulative carcinogenic risk is less than or equal to 1×10^{-4}. As an overall design element, the ICDF landfill is protective of human health and the environment. The design capacity of the ICDF landfill is 390,000 m^3 (510,000 yd^3), as authorized by the ROD (DOE-ID 1999). The ICDF landfill is designed to have an operational life of 15 years, a post-closure period of 30 years, and an expected final cover design life of 1,000 years.

To develop the design for the ICDF landfill, several design calculations, studies, and evaluations were performed to determine key design parameters. Each of these are presented in an EDF, contained in Appendix Volumes 1 through 3. As described in Section 1.3 of this RD/CWP, some design elements have been finalized prior to the development of this document, and are therefore referenced but not included herein. A more detailed description of each of these EDFs is contained in Section 1.4, which describes the organization of this RD/CWP. The following EDFs were developed to support the design of the ICDF landfill:

- EDF-ER-266—Subsurface Consolidation Calculations
- EDF-ER-267—Landfill Compaction/Subsidence Study
- EDF-ER-268—Slope Stability Assessments
- EDF-ER-273—Permeable Reactive Barrier Evaluation Study
- EDF-ER-274—Leachate/Contaminant Reduction Time Study
- EDF-ER-275—Fate and Transport Modeling Results and Summary Report
- EDF-ER-276—Evaluation of Geotechnical Investigations Required to Complete Design and Construction
- EDF-ER-277—Waste-Soil Design Ratio Calculations
- EDF-ER-282—Seismic Evaluation of Landfill and Evaporation Pond
- EDF-ER-286—Waste Placement Plan.

The ICDF landfill is designed to only accept INEEL on-Site generated CERCLA wastes meeting the ICDF Landfill WAC, developed as part of this RD. The WAC is designed to protect the SRPA by limiting the hazardous and radiological constituents allowed in the landfill. The WAC also ensures that human health and the environment are protected. The ICDF Landfill WAC is provided as Appendix P to this RD/CWP:

- *Waste Acceptance Criteria for ICDF Landfill* (DOE-ID 2002b).

3.8 Evaporation Pond

The evaporation pond design consists of two individual cells to allow for maintenance in one cell while operations continue in the other pond. The evaporation pond has been designated and will be constructed as a CAMU in accordance with the substantive requirements of IDAPA 58.01.05.08 (40 CFR 264.552 and 40 CFR 264 Subpart K and CC).

Design of the evaporation pond focused on two key design calculations, which are described in more detail in Sections 1.3 and 1.4 of this RD/CWP:

- EDF-ER-323—Evaporation Pond Berm Overtopping Analysis
- EDF-ER-271—Evaporation Pond Sizing with Water Balance and Make-up Water Calculations.

The ICDF evaporation pond is designed to accept aqueous wastes such as purge water, decontamination liquids, and other INEEL CERCLA wastes meeting the ICDF evaporation pond WAC, developed as part of this RD. The WAC is designed to be protective of human health and the environment. The ICDF evaporation pond WAC is provided as Appendix Q to this RD/CWP:

- *Waste Acceptance Criteria for ICDF Evaporation Pond* (DOE-ID 2002c).

3.9 Landfill and Evaporation Pond Liners

The landfill liner is designed to meet or exceed radioactive, hazardous, and PCB waste landfill liner system criteria. The liner system, as designed, will facilitate protection of the SRPA. Two relevant calculations have been performed as part of the design effort to address the components of the landfill liner design:

- EDF-ER-281—Liner and Final Cover Long-Term Performance Evaluation and Final Cover Life Cycle Expectation

- EDF-ER-278—Liner/Leachate Compatibility Study.

In addition to the landfill liner design calculations, design specifications (SPC-1476) have been prepared to ensure that the landfill liner is installed to function as it is designed. The relevant specifications to ensure correct liner placement, integrity, and joining are as follows:

- Specification 02371, "Geotextiles," (SPC-1476)

- Specification 02661, "Geomembranes," (SPC-1476)

- Specification 02666, "Soil Bentonite Liner," (SPC-1476)

- Specification 02667, "Geosynthetic Clay Liner," (SPC-1476).

The evaporation pond liner design presented as part of this document includes an alternative liner system. This liner system is designed to minimize waste by reducing the prescriptive operations layer required by regulation. The Subtitle C design requirements allow for an equivalency determination, to propose a liner design that is equally protective of human health and the environment. To aid the equivalency analysis, an EDF was prepared to demonstrate the equivalency of the proposed evaporation pond liner system. "Evaporation Pond Lining System Equivalency Analysis" (EDF-ER-312), part of the 60% design package, presents the request for equivalency. During Agency comment resolution and finalization of EDF-ER-312 in the 60% design, it was decided that the proposed evaporation pond liner system would include a 0.9 m (3 ft) operations layer between the liners to serve as frost protection. The new design is presented in the design drawings (Appendix Z). The liner design for the evaporation pond that will be used includes the following layers, which start with the low permeability base soil from Rye Grass Flats as the base course:

- Geosynthetic clay liner (GCL)

- High-density polyethylene (HDPE)

- Geocomposite

- Operations layer—0.9 m (3 ft)

- GCL
- HDPE
- Sacrificial HDPE.

The alternate liner design presented here and shown in the design drawings (Appendix Z), has been approved for use at the ICDF evaporation pond by IDEQ.

3.10 Leachate Collection System

The LCS is designed with a double liner leachate collection/detection liner system that is integral to the landfill and evaporation pond liner systems. The LCS is designed to collect leachate from the landfill and transfer the leachate to the leachate collection sump. From the sump, the leachate can be pumped to the landfill crest pad building and ultimately transferred to the evaporation pond, following sampling. The ICDF LCS has several unique design characteristics that are not standard in ordinary construction, including double-walled pipe, material compatibility with ICDF landfill wastes, and separate high- and low-flow pumping systems.

Two design calculations were developed to provide the basis for the LCS design:

- EDF-ER-269—Leachate Generation Study
- EDF-ER-280—Landfill Leachate Collection System Design Analysis.

In addition to the design studies, design specifications have been developed to ensure the LCS is installed as designed. The applicable specifications for the LCS are: Specification 02371, "Geotextiles," Specification 02373, "Composite Drainage Net (Geocomposite)," and Specification 02661, "Geomembranes" (SPC-1476). Additional piping specifications that are necessary for the LCS are presented in Section 3.13.

3.11 Process Instrumentation and Control System

The ICDF Process Instrumentation and Control System (PICS) incorporates hardware and software, enabling operators to monitor and interface with process control systems both locally and remotely. The design details of the PICS are contained in the design drawings (Appendix Z).

3.12 Crest Pad Buildings

The landfill and evaporation pond crest pad buildings are designed to provide an enclosed area for sampling and maintaining the leachate pumps. The buildings are designed to be an insulated, engineered metal building system classified as Type II-N construction in accordance with the UBC, with metal wall panels and a standing seam metal roof. The crest pad buildings are designed for dead, live, snow, and wind loads in accordance with the design requirements. The crest pad buildings are designed with reinforced, cast-in place concrete foundations meeting the design requirements. Details of the crest pad building design are presented in the design drawings (Appendix Z).

The crest pad buildings each have a radiant heater for freeze protection and personnel comfort. The crest pad buildings are designed with fire alarm, voice paging, and evacuation systems.

Several design specifications have been developed to ensure the construction of the crest pad buildings are in accordance with the design. The applicable specifications, found in Appendix Y, are as follows:

- Specification 03301, "Reinforced Concrete," (SPC-1476)
- Specification 13122, "Metal Building Systems," (SPC-1476)
- Specification 16005, "Electrical," (SPC-1476).

3.13 Final Landfill Cover

The final landfill cover is designed to prevent intrusion for its 1,000-year design life. The design life for the final landfill cover is calculated in "Liner and Final Cover Long-Term Performance Evaluation and Final Cover Life Cycle Expectation" (EDF-ER-281).

Conceptual design and Title I design efforts evaluated the performance of an infiltration limiting cover. Title I design efforts concluded that the infiltration limiting cover would be the most successful cover design for the ICDF landfill, based on the site conditions present. Figure 3-2 identifies the various climatic conditions that have an effect on the final landfill cover, and depicts in a simplified manner how each component of the infiltration limiting cover functions.

The final cover design provides armored sides to protect against flooding, and prevent erosion of the cover over the 1,000-year design life of the landfill.

The cover is designed as an infiltration limiting cover, to minimize infiltration to the waste, thus reducing leachate generation and contaminant migration. The hydrologic characteristics of the final cover were modeled in "Hydrologic Modeling of Final Cover" (EDF-ER-279). The results of the modeling indicate a very low infiltration rate through the entire cover system. The low infiltration rate to the waste is attributed to the design of the final cover, which consists of three distinct functional elements, described below, and shown in a schematic as Figure 3-3:

- Upper section: The upper water storage component provides water storage during wet periods for later release into the atmosphere during dry periods.
- Middle section: The biointrusion component provides a drainage layer, protection from burrowing animals, and a capillary break.
- Lower section: The lower section includes a composite liner system that has a permeability less than or equal to the permeability of the landfill bottom liner system that complies with IDAPA 58.01.05.008 (CFR Part 264.310). Lateral drainage can occur above the composite liner system through a high-permeability drainage material.

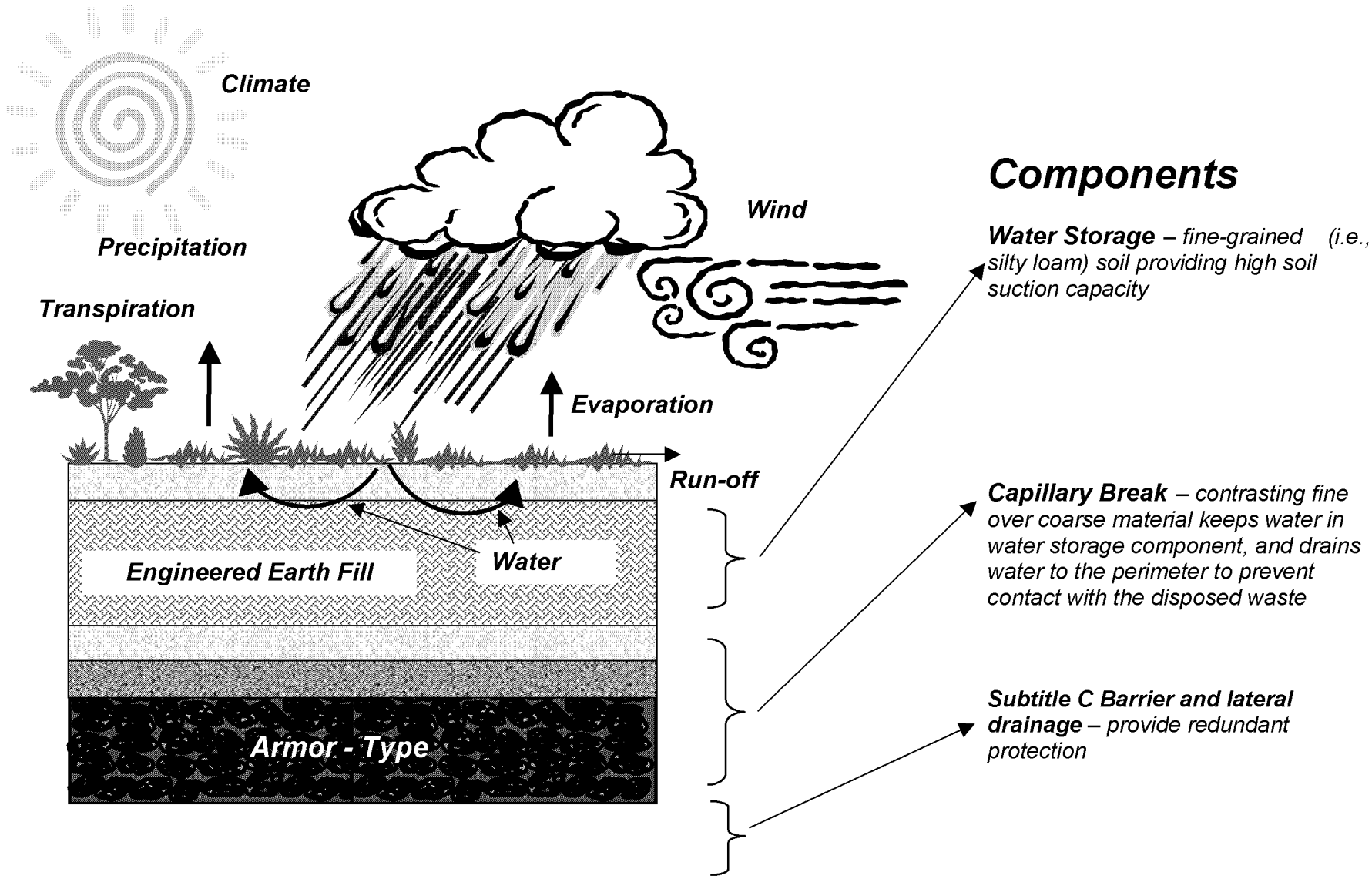

Figure 3-2. Simplified depiction of the infiltration limiting final cover for the ICDF landfill.

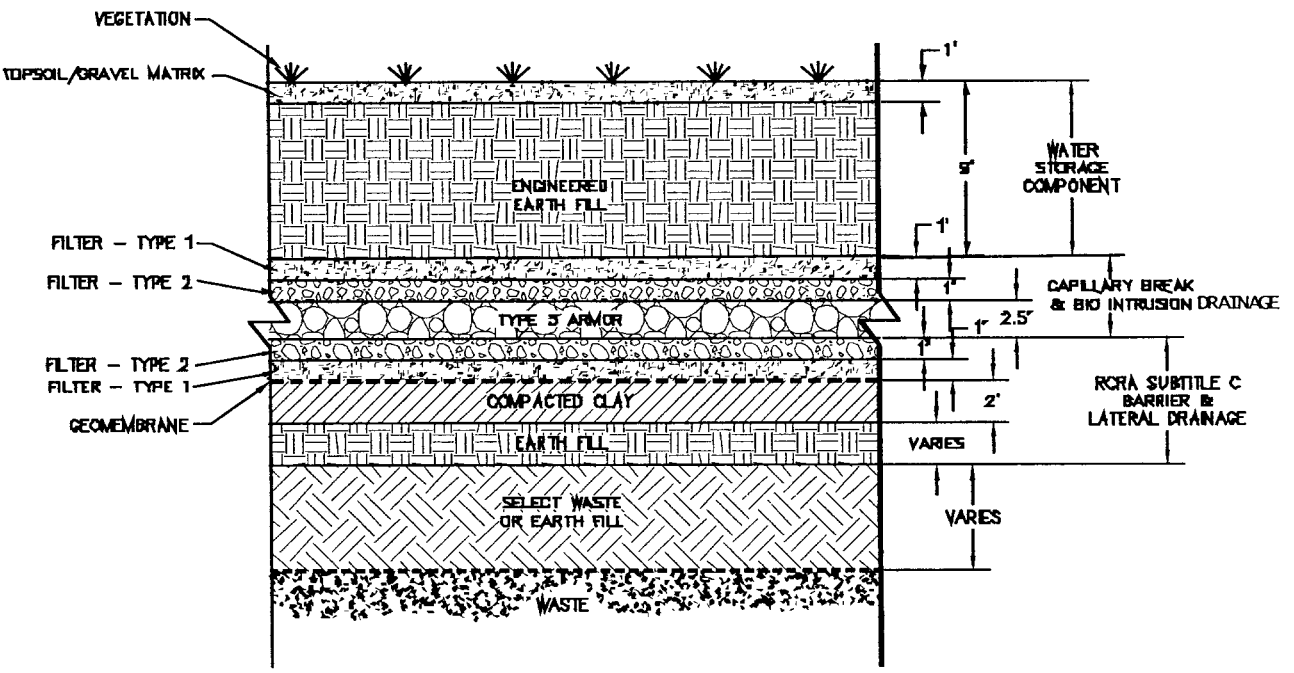

Figure 3-3. Schematic of the final landfill cover functional sections.

3.14 Piping

Piping has been designed as a component of the LCS to capture leachate in the liner system of the ICDF landfill, transfer the leachate to the landfill sump, allow pumping of the leachate from the landfill sump to the crest pad buildings and, ultimately, to the evaporation pond following sampling. Piping design is noted in the design drawings (Appendix Z) and in the specifications: Specifications 15060, "Piping;" 15021, "High Density Polyethylene (HDPE) Pipe;" and 15992, "Piping Leakage Testing;" (SPC-1476).

3.15 Warning Signs and Permanently Surveyed Benchmarks

Warning signs and permanently surveyed benchmarks will be established at the corners of the landfill to designate the boundaries of each waste cell for the design life of the landfill. Depending on the final closure alternative selected for the evaporation pond, permanently surveyed benchmarks may be established at the corners of the evaporation pond. Permanently surveyed benchmarks, which designate the location of subsurface contaminants, are designed to indicate the contaminants in the landfill (and possibly in the evaporation pond) to provide the necessary information to future land users. Other forms of institutional controls, including land use and access restrictions, will also be established at the ICDF landfill and evaporation pond, in accordance with the OU 3-13 ROD (DOE-ID 1999). The institutional controls, established in the ROD and implemented through the institutional control plan (DOE-ID 2001e), are designed to protect residential and industrial receptors during various periods of assumed land use. Closure and post-closure institutional controls will be included as part of O&M in the ICDF Complex RAWP.

3.16 Surface Water and Erosion Protection

Contouring and grading of the area surrounding the ICDF landfill and evaporation pond, as well as the slope of the final cover, have been designed to divert surface water flow from the open excavation

during construction, and from the waste disposal cells during operations. Revegetation of the area around the landfill and evaporation pond, along with the designed slopes, will encourage drainage without erosion. A project Storm Water Pollution Prevention Plan (Appendix V) has been developed for the ICDF landfill and evaporation pond construction, which will describe additional measures beyond the design specifications for surface water control and erosion protection.

The final cover design provides armored sides to protect against flooding, and prevent erosion of the cover over the 1,000-year design life of the landfill.

All disturbed areas will be revegetated in accordance with the "Guidance for Revegetation of Disturbed Areas at the Idaho National Engineering Laboratory" (DOE-ID 1989) and the design specifications. The final cover of the landfill will also be vegetated to reduce run-off velocity and wind erosion. The final cover will be sloped to divert surface water and minimize erosion. The areas directly surrounding the landfill cover will be contoured and graded to enhance drainage away from the cover, and revegetated to further slow water flow velocities and prevent erosion.

Design specifications were developed to mitigate site erosion and control surface in accordance with Specification 02920, "Reclamation and Revegetation" (SPC-1476).

3.17 Groundwater Monitoring

Groundwater monitoring will be performed to meet the operational and post-closure requirements for the ICDF landfill and evaporation pond. The monitoring will also assess the remedy performance of the ICDF landfill and evaporation pond in relation to the ROD RAOs and remediation goals (DOE-ID 1999). A groundwater monitoring plan (DOE-ID 2002e) has been developed to provide the necessary data to evaluate operational and post-closure performance, and provide the necessary data to evaluate the RAOs and remediation goals. Additionally, the groundwater monitoring plan is designed to establish background water quality in the SRPA prior to startup of the ICDF Complex operations, using an existing upgradient well and eleven new wells downgradient from the evaporation pond and landfill. Samples will be collected from the tertiary leak detection system sump and the LCS sump for comparison, and to determine if the landfill or evaporation pond liners have failed. The groundwater monitoring plan (DOE-ID 2002e) is included as Appendix S.

4. HUMAN HEALTH AND ENVIRONMENTAL COMPLIANCE

4.1 Remedial Action Objectives

The RAOs for OU-3-13 Group 3, ICDF landfill and evaporation pond, were developed in accordance with the National Contingency Plan (NCP) and are based on the results of the human health and ecological risk assessments outlined in the ROD (DOE-ID 1999). The Agencies selected RAOs for a particular site, depending on the affected media. The ROD outlines the general basis for the RAOs. The RAOs for the ICDF landfill and evaporation pond were developed using the following assumptions, which are included on page 8-1 of the ROD (DOE-ID 1999):

- The INTEC facility will be used as an industrial facility up to the year 2095. During DOE operations, which are expected to continue to at least 2045, the area will be a radiological control area.

- The annual carcinogenic risk at INTEC from natural background radiation due to surface elevation and background soil radiological contamination is 1×10^{-4} (EPA 1994; NEA 1997; UNEP 1985).

- Permanent land use restrictions will be placed on those release site source areas and the ICDF Complex, that will be closed in place, for as long as land use and access restrictions are required for the protection of human health and the environment.

The RAOs are contained in Section 8 of the ROD, pages 8-2 and 8-3. The RAOs for OU 3-13 that are relevant to the ICDF were established for groundwater, the SRPA, and surface soils. Elements of each of the RAO sections are applicable to the design, operation, and closure of the ICDF landfill and evaporation pond.

To ensure protection of groundwater, the ROD RAOs require maintaining caps over the closed ICDF landfill to prevent the release of leachate to the underlying groundwater which would result in exceeding a cumulative carcinogenic risk of 1×10^{-4}, a total HI of 1; or applicable State of Idaho groundwater quality standards (i.e., MCLs) in the SRPA. From an exposure standpoint, the RAOs require that the ICDF landfill caps are maintained to prevent exposure to the public to meet a cumulative carcinogenic risk of 1×10^{-4} and a total HI of 1. For the period prior to 2095, the RAOs require preventing on-site workers and the general public from ingesting SRPA groundwater that exceeds a cumulative carcinogenic risk of 1×10^{-4}, a total HI of 1; or applicable State of Idaho groundwater quality standards (i.e., MCLs). Beyond 2095, the RAOs require that SRPA groundwater does not exceed a cumulative carcinogenic risk of 1×10^{-4}, a total HI of 1; or applicable State of Idaho groundwater quality standards (i.e., MCLs). The RAOs also require that institutional controls be continued beyond 2095 for all capped areas (ICDF landfill) to prevent disturbance of the capped areas to achieve a cumulative carcinogenic risk of 1×10^{-4} and a total HI of 1.

To meet the RAOs, remediation goals are established for the ICDF landfill and evaporation pond. The remediation goal for the ICDF landfill is to consolidate contaminated soils at a single location to prevent exposure of human and ecological receptors. This remediation goal will be accomplished by siting, designing, operating, and closing the ICDF landfill to prevent exposures or leachate releases to the underlying SRPA groundwater that exceed the RAOs. Design criteria to meet the RAOs are presented in Section 2 of this RD/CWP.

4.2 Applicable or Relevant and Appropriate Requirements

The ARARs are identified and discussed as part of the Technical and Functional Requirements (TFR-71) presented in Appendix CC. Under CERCLA, the project must meet the substantive, but not the administrative requirements of the ARARs. They are separated into three categories: (1) "Action-specific," (2) "Chemical-specific," and (3) "Location-specific." Another category, "To Be Considered (TBC)," outlines requirements that were considered in the ROD, and the substantive requirements are now applicable to the project.

1. Action-specific ARARs relate to the design, construction, operation, closure, and post-closure plans for the ICDF landfill and evaporation pond. These requirements also include site security, inspections, and personnel training at the ICDF landfill and evaporation pond. Idaho's fugitive dust rules and air pollution controls apply because they address activities at the ICDF landfill and evaporation pond. The Storm Water Discharge rules require control of run-off during construction activities. An evaporation pond will collect leachate, purge water, and other INEEL CERCLA-generated aqueous wastes that meet the evaporation pond WAC (DOE-ID 2002c), and will be managed as a surface impoundment and a CAMU under IDAPA 58.01.05.008 (40 CFR 264.221 and 40 CFR 264.552). The ICDF landfill and evaporation pond will be operated and closed under the substantive requirements outlined in IDAPA 58.01.05.008 (40 CFR 264 Subparts G, K, and N), and the landfill will also be built under the substantive design requirements for PCB landfills (40 CFR 761.75[b][1][2]). Equipment decontamination standards (IDAPA 58.01.05.008 [40 CFR 264.114] apply at closure and during operations.

2. Chemical-specific ARARs for characterizing waste (IDAPA 58.01.05.008 [40 CFR 261]) apply to characterizing hazardous wastes generated during remediation activities at the ICDF landfill and evaporation pond. Requirements for PCB disposal are applicable to wastes generated outside OU 3-13 (40 CFR 761.50[a],5[b], 3[b][7], [b][8], and [d][4]).

3. Location-specific ARARs relate to the new construction at the ICDF landfill and evaporation pond, and ensure that ICDF activities do not adversely affect archeological or Native American cultural resources. Preliminary studies show that the ICDF landfill and evaporation pond activities will not be triggered because the area is sited in a previously undisturbed area, and has been surveyed for archeological and cultural resources and received the appropriate clearances.

4. TBCs identify DOE policies limiting public exposure to radiation and ensuring worker safety.

5. CONSTRUCTION WORK PLAN

This section describes the management approach to accomplish the construction of the ICDF evaporation pond and landfill, the construction work elements, the associated schedule, and the documentation required to perform the action and to document its completion. Because the RD and the construction work plans are combined into one document for this project, some details of the implementation have already been described in the design sections of this document.

5.1 Relevant Changes to the RD/RA Scope of Work

This section specifies the relevant changes to the RD/RA SOW for WAG 3, OU 3-13 (DOE-ID 2000a). The described changes to the SOW have been discussed with and agreed to by the Agencies. The following subsections identify relevant changes to the RD/RA SOW.

5.1.1 ICDF Landfill and Evaporation Pond Construction Phasing

The first significant change to the RD/RA SOW for WAG 3, OU 3-13 (DOE-ID 2000a) is phasing the work scope of the ICDF evaporation ponds and the ICDF landfill to accommodate the early opening of the ICDF landfill and evaporation pond. Work will be phased in two stages. Stage I activities will be completed by December 31, 2001. These activities include early excavation of the landfill and evaporation pond and the construction of the bentonite test pad. These design activities are currently well defined and, consequently, represent low risk for significant future revisions of the ICDF landfill design. Stage II activities will commence after December 31, 2001, and include the ICDF landfill construction, evaporation pond construction, sloped test pad, and crest pad buildings. This RD/CWP, especially Section 5, which is prepared for the construction portion of the project, describes the activities that are necessary to construct, operate, and close the ICDF landfill and evaporation pond. This section of the document is written to provide the plan for work that will be performed during construction, rather than serve as a report of work that has been completed. Thus, many of the activities that have been substantially or partially completed during the Stage I construction activities, as well as certain operational requirements to be performed after construction, are included in subsequent sections, to provide the comprehensive RA plan for the ICDF landfill and evaporation pond. The operational and management aspects of the RA will be further developed in the ICDF Complex RAWP.

5.1.2 ICDF Evaporation Pond Liner

The second significant change is the design of the ICDF Complex evaporation ponds' lining system. Subtitle C (40 CFR Part 264) establishes regulatory requirements for design of lining systems for RCRA Subtitle C facilities. This regulation allows alternative lining systems, but requires that equivalency to the prescriptive (or standard) be demonstrated. "Pond Lining System Equivalency Analysis" (EDF-ER-312) was prepared with a proposed alternative evaporation pond lining system that was designed to function as effectively as the prescriptive Subtitle C lining system.

The alternate design was presented in the 60% design package, in EDF-ER-312. During Agency comment resolution and finalization of EDF-ER-312 in the 60% design, it was decided that the proposed evaporation pond liner system would include a 0.9 m (3 ft) operations layer between the liners to serve as frost protection. The new design is presented in the design drawings (Appendix Z). The liner design for the evaporation pond that will be used includes the following layers, which start with the low-permeability soil from Rye Grass Flats as the base soil:

- Rye Grass Flats Base Soil—0.3m (1 ft)

- GCL
- HDPE
- Geocomposite
- Operations layer—0.9 m (3 ft)
- GCL
- HDPE
- Sacrificial HDPE.

The IDEQ has approved the evaporation pond liner system presented above for the ICDF.

5.1.3 Reconfiguration of ICDF RD/CWP

The previously submitted ICDF RD/RAWP has been reconfigured to address operation and management concerns raised by the Agencies during efforts to finalize the previously submitted SSSTF RD/RAWP. The ICDF RD/RAWP and the SSSTF RD/RAWP will be split into two design/construction documents and one combined ICDF Complex remedial action document, addressing and resolving operational and management concerns raised by the Agencies. The reconfiguration proposes three primary documents: 1) the SSSTF RD/CWP, consisting of the design and construction documents prepared for the SSSTF; 2) the ICDF RD/CWP, consisting of the design and construction documents prepared for the ICDF landfill and evaporation pond; and 3) the ICDF Complex RAWP, consisting of the documents associated with operations and management of the ICDF Complex. The ICDF Complex RAWP will be presented to the Agencies for comment and finalization during the summer of 2002.

5.2 Subcontracting Plan

The selected contracting strategy for the ICDF landfill and evaporation pond construction was a competitively bid, design-build contract for the construction of Cell 1 and the evaporation ponds. The INEEL procurement process was followed and included issuing a request for proposal (RFP), pre-bid conference, bid evaluation, notice of award, notice to proceed, chartering and partnering meetings as needed, VDSs, and a pre-construction kick-off meeting. Several of these contracting activities will be ongoing throughout the ICDF Cell 1 and evaporation pond construction. The RFP specified, among other things, a strict period for performance that will correspond with the overall project schedule.

Once the construction of Cell 1 is complete, the construction work for Cell 2 could proceed. The INEEL procurement process would be followed, similar to the Cell 1 construction. The design for Cell 2 is provided in this RD/CWP, its appendices, and attached documents; future subcontracting for Cell 2 will be for construction only.

If funding availability becomes an issue, the construction of ICDF Complex components are scheduled for staged implementation. If necessary, multiple subcontracts could be implemented if the construction funds are spread over several years.

5.3 Remedial Action Work Tasks

The following sections identify the work elements required to implement and complete the ICDF landfill and ICDF evaporation pond construction. Additional detail can be found in the technical specifications (Appendix Y) and the project design drawings (Appendix Z).

5.3.1 Premobilization

Premobilization encompasses the activities performed before mobilization and construction begins. Requirements for VDS, training, and medical information specified by the design specifications and INEEL-specific requirements will be completed as required. All required documentation, bonds, insurance, and proof that all required training and medical examinations are complete in accordance with the construction HASP will be prepared prior to mobilization. These submittals certify that the project mobilization is ready to proceed. Design documentation will be AFC so that work can proceed in accordance with the documents. INEEL work control and job safety analyses will be completed before the notice to proceed, and the project will be placed on the INTEC plan of the week schedule.

5.3.2 Mobilization

Mobilization is the work required in preparation of the construction activities. This work generally implements the project and site-required administrative, engineering, and health and safety requirements. In preparation for work that must be done, electrical supply systems, communication systems, and water systems must be made available in the construction area so that field labor and equipment can be mobilized. The activities will include the following:

- High- and medium-voltage electrical power supply systems
- Low-voltage electrical power supply systems
- Raw water and fire water systems
- Office and equipment site preparation—if needed.

5.3.3 Storm Water Management and Sediment Control

Storm water will be managed according to the design presented in Section 3 of this RD/CWP and in compliance with the INEEL requirements contained in the project-specific Storm Water Pollution Prevention Plan (PLN-962). Temporary water management practices may be implemented as best management practices by using the following materials: silt fences, straw bale barriers, straw, stone, and riprap. Erosion control and storm water management will apply to all construction and construction support areas, including minor access roads and temporary stockpile areas. Temporary control measures for slope protection and controls to reduce erosion may be in place as required for all construction prior to commencement of construction. These temporary control measures will be coordinated with permanent erosion-control features to assure continuous and effective erosion control throughout the construction and post-construction periods.

5.3.4 Dust Control

Dust generation will be minimized during excavation, loading, hauling, dumping, and other construction activities that may generate dust. This will be accomplished by using water truck(s) and/or soil fixatives. Over-application of water resulting in free liquids will not be allowed in accordance with

waste minimization controls. Dust will be monitored at the borrow areas, the ICDF evaporation pond, and the ICDF landfill. If required and specified by construction management, surfactants may be used to mitigate dust control.

Work will be restricted or suspended if unacceptable amounts of dust are being generated as determined by the field team leader, health and safety officer, and/or radiological control technician (RCT). Dust may be the result of dry soil (which may require wetting down) or wind. All excavating, loading, hauling, and dumping operations will be evaluated when sustained wind speed reaches 25 mph or gusts of 30 mph or greater are recorded by the INEEL National Oceanic and Atmospheric Administration (NOAA) weather station, which will be periodically contacted by field project personnel when wind speeds are high. Several lost partial or full days will be anticipated due to high wind. Work areas that have the potential of generating dust will require spraying by a water truck.

5.3.5 Clearing and Grubbing the Sites

Clearing and grubbing, which is the clearing of vegetation and debris, will be performed in accordance with Specification 02200, "Site Preparation" (SPC-1476). Clearing and grubbing has taken place at the ICDF landfill and ICDF evaporation pond area, supporting haul roads, construction laydown areas, and initiated at the Rye Grass Flats Borrow Area under Stage 1 construction. Under Stage 2, additional clearing and grubbing will be necessary at the Rye Grass Flats Borrow Area. After adequate erosion and sediment controls have been placed with the use of bulldozers or appropriate construction equipment, the sites will be cleared of any interfering or objectionable material to the limits designated in the drawings (Appendix Z), or as directed by the construction manager. Interfering or objectionable material will either be hauled to another location at INTEC for future placement into the landfill or disposed in accordance with the direction of the construction manager.

Clearing and grubbing operations will be confined to those areas required for barrier construction or as directed by the construction manager. Any areas outside the designated areas that are damaged or disturbed by the construction operation will be repaired and seeded in accordance with Specification 02920, "Reclamation and Seeding" (SPC-1476).

5.3.6 Borrow, Haul, and Stockpile

Soil and rock as borrow material will be used, which has been hauled or stockpiled to be utilized for fill or as a soil admixture, as in the case of the bentonite admixture. Three types of borrow are required for this project: 1) native soil excavated from the ICDF landfill and evaporation pond excavation; 2) native low-permeability soil from the INEEL Rye Grass Flats Borrow Area; and 3) gravel for the ICDF landfill and evaporation pond liner system. Some borrow, haul, and stockpile work has been completed during Stage I (early excavation), during field season 2001, but is described in this section for a comprehensive project description. For the bentonite admixture, the Rye Grass Flats Borrow Area will be cleared and grubbed. The area will be excavated using conventional excavation equipment for the base soil of the bentonite admixture in accordance with Specification 02317, "Borrow Area Excavation" (SPC-1476). Borrow area will be developed and operated in accordance with the mitigation measures specified in the Environmental Assessment and Plan for New Silt/Clay Source Development and Use at the INEEL (DOE 1997). Mitigation and reclamation measures required by this document will be reviewed and approved by the construction manager prior to borrow area development. Soil excavated from the Rye Grass Flats Borrow Area will also be used for the structural fill of the ICDF evaporation pond. For the structural fill of the ICDF evaporation pond, the 1-ft structural fill will be comprised of low-permeability base soil from the Rye Grass Flats Borrow Area. Material that is excavated with conventional excavation equipment for the ICDF landfill and ICDF evaporation pond that is not immediately placed in fill locations will also be stockpiled for later use as fill material. In general,

clearing and grubbing of a site location will be performed to the project limits designated in the drawings (Appendix Z). Adequate erosion control and sediment controls will be in place prior to borrow excavation and will be maintained throughout the excavation process until closure of the excavation site. Soil will be excavated by excavators and bulldozers. Borrow and stockpiled material will be loaded by excavators or loaders into haul trucks and taken to areas designated by the construction manager for use in roadways, haul roads, ICDF landfill and evaporation pond bentonite preparation, berms, and as clean fill material.

Borrow that is not immediately excavated and hauled will be stored in either permanent or temporary stockpiles. "Permanent" stockpiles are a stockpile of material that remains at the completion of construction. Material from the "permanent" stockpile may be used when closing the facility. Temporary stockpiles are of material to be utilized during construction and will be removed prior to the completion of construction. All stockpiles will be maintained in accordance with Specification 022315, "Fill and Backfill" (SPC-1476).

5.3.7 Soil Excavation

5.3.7.1 Soil Excavation at the Borrow Area. Soil excavation at the Rye Grass Flats Borrow Area consists of excavating low-permeability soils. This low-permeability soil will be hauled to the cell/evaporation pond construction area and mixed at a designated location in or near the landfill shown in the drawings (Appendix Z) to form the bentonite soil mixture for the CCL at the ICDF landfill. The low-permeability soil will also be utilized as the structural fill for the ICDF evaporation pond liner. Excavation will be performed within the limits specified in the Specifications (SPC-1476). Excavation will be done by excavators and bulldozers. Bulldozers will push the soil to the loading area and a loader will load clean fill into haul trucks.

5.3.7.2 Soil Excavation at the ICDF Evaporation Pond. Soil excavation at the ICDF evaporation pond consists of excavating the evaporation pond subgrade area as shown in the drawings (Appendix Z). Prior to excavating the area was cleared and grubbed as required. Excavators, bulldozers, and other heavy equipment were used to perform the excavation. Excavated soils were used to create the berms surrounding the evaporation pond. Excavation was performed in accordance with Specification 02316, "Excavation" (SPC-1476).

Following excavation of the evaporation pond, the soil will be prepared for liner placement. This subgrade preparation will be in accordance with Specification 02319, "Subgrade Preparation" (SPC-1476). Soil excavation at the evaporation pond will also consist of excavating pipe trenches for the leachate piping, supporting utilities and instrumentation, and the anchor trench for the liner. The excavation for these activities will require coordination and will follow the construction schedule sequence. Excavation will follow Specification 02316, "Excavation" (SPC-1476).

5.3.7.3 Soil Excavation at the ICDF Landfill. Soil excavation at the ICDF landfill was similar to that performed at the ICDF evaporation pond, and consisted of excavating the landfill subgrade area required and as shown in the drawings (Appendix Z). Prior to excavating, the area was cleared and grubbed as required. Excavators, bulldozers, and other heavy equipment were used to perform excavation. Excavated soils were used to create the berms surrounding the landfill. Excavation was performed in accordance with Specification 02316, "Excavation" (SPC-1476).

Following excavation of the landfill, the soil will be prepared for liner placement. This subgrade preparation will be in accordance with Specification 02319, "Subgrade Preparation" (SPC-1476). Soil excavation at the landfill will also consist of excavating pipe trenches for the leachate piping, supporting utilities and instrumentation, and the anchor trench for the liner. The excavation for these activities will require coordination and will follow the construction schedule sequence. Excavation will follow

Specification 02316, "Excavation" (SPC-1476). Excess soil from the excavation of the landfill and the evaporation pond was stockpiled south of the siting study area.

5.3.8 Soil Consolidation

Soil required for fill material on the berms, roads, landfill, ponds, and haulways, as well as the bentonite mixture, required some type of soil consolidation—that is, strengthening through compaction to a specification of relative compaction. The specification requirements for each soil application were followed.

For the compacted clay liner (CCL) in the ICDF landfill, the preselected base soil will be hauled to the landfill and stockpiled. It will be subsequently mixed with bentonite admixture. The soil will be placed in lifts and compacted using conventional compaction equipment and water as allowed. The CCL will follow Specification 02666, "Soil Bentonite Liner" (SPC-1476). For other soil applications the soil will be placed to the maximum height allowed per lift. The soil will then be compacted using conventional compaction equipment and additional moisture may be required to obtain adequate compaction. Soil consolidation will be in accordance with Specifications 02315, "Fill and Backfill" and 02319, "Subgrade Preparation" (SPC-1476).

5.3.9 Construction Activities

The construction activities of the ICDF landfill and ICDF evaporation pond, as described below, will be performed in the sequence of the construction schedule. All the requirements for pre-mobilization will be completed. After pre-mobilization activities are complete, equipment and personnel will mobilize and begin operation. Fencing and gates to protect the worker areas will be established and in place. Prior to the commencement of any work activities, soil stabilization and slope protection and controls will be established and in place to reduce erosion, sedimentation, and water pollution through the use of erosion-control devices. Dust control measures, primarily by water trucks, will also be in place and utilized as necessary to control dust from the construction sites.

The specific work elements for this RD/CWP include the following:

- Excavation of the Rye Grass Flats Borrow Area and developing the soil bentonite admixture
- Excavation and filling of the ICDF landfill and the evaporation ponds
- Excavation, filling, and grading of the haul roads, access roads, and the crest building pads
- Construction of the crest buildings
- Construction of the ICDF landfill liner and ICDF evaporation pond liner
- Construction of the leachate system piping, instrumentation, and utilities for the ICDF landfill and ICDF evaporation pond.

5.3.9.1 Bentonite Clay Mix. The bentonite clay mixture is a mixture of a commercially prepared bentonite admixture and accepted low-permeability base soil from the Rye Grass Flats Borrow Area. The bentonite clay mix is used as the primary CCL in the ICDF landfill. For the compacted clay layer of the ICDF landfill, the bentonite liner consists of a bentonite clay mix, an admixture that consists of natural soil that is mixed with bentonite and moisture conditioned. The bentonite clay mix will be prepared and processed according to Specification 02666, "Soil Bentonite Liner" (SPC-1476).

5.3.9.2 Transport, Placement, and Compaction of Bentonite Clay. Low-permeability base soil from the Rye Grass Flats Borrow Area will be transported to the ICDF landfill site by haul trucks and stockpiled. The stockpiled soil clay will be mixed with bentonite clay, and the clay mix will be placed in lifts to the lines and grades shown in the construction drawings (Appendix Z). The first lift will be a maximum of 8 in. thick and will be carefully placed to minimize mixing the soil bentonite with the excavated subgrade. Subsequent lifts will be placed at a maximum thickness of 6 in. Each lift will be compacted with conventional compaction equipment. Soil bentonite liner (SBL) placement and compaction will follow Specification 02666, "Soil Bentonite Liner" (SPC-1476). Care will be taken to maintain the required compaction, hydraulic conductivity, uniformity, and the moisture content throughout the construction and post-construction of the bentonite clay liner. The SBL surface will be maintained in a condition suitable for geomembrane installation until the surface is covered.

5.3.9.3 Primary and Secondary Geomembrane Liners. Geomembrane liners act as barriers to contain liquids that have leached from the ICDF evaporation pond and ICDF landfill. The geomembrane lining system for both the evaporation pond and the landfill are constructed of HDPE. The geomembrane work includes manufacture, fabrication, supply, and installation of geomembrane. Geomembrane will be used for lining of the landfill and the evaporation pond and for other applications, as shown in the drawings (Appendix Z). Prior to beginning geomembrane installation, the proposed methods for geomembrane deployment, panel layout, seaming, repair, and protection will be developed in a plan, which will include a quality control (QC) program related to geomembrane installation. Prior to placing the geomembrane, a surface will be prepared that will be smooth and clean, which will provide a firm and unyielding surface for the geomembrane. The geomembrane installer will certify in writing that the surface on which the geomembrane will be installed is acceptable. The anchor trench will be constructed. Each geosynthetic layer will be anchored with a minimum 6-in.-thick compacted lift of compacted soil within the anchor trench in accordance with Specification 02661, "Geomembranes" (SPC-1476).

Geomembrane panels will be installed at locations indicated in the layout plan, as approved or modified. Geomembrane placement and seaming will follow Specification 02661, "Geomembranes" (SPC-1476). Material testing will be in accordance with the *ICDF Construction Quality Assurance Plan* (DOE-ID 2002f).

5.3.9.4 Leachate Collection Recovery System. The LCS is an engineered collection system to collect both primary and secondary leachate at the ICDF landfill and to allow for disposition of the leachate collected. Primary leachate is contaminated water that drains from the LCS and secondary leachate is water that drains from the drainage system between the primary and secondary liners. The LCS will be constructed during the construction of the ICDF landfill and the ICDF evaporation pond. The overall system consists of the in-cell drainage/sumps, collection piping, and the evaporation pond liner system. Monitoring of the leachate will occur at the crest pad buildings. Leachate piping will be excavated and placed according to the drawings (Appendix Z) and in accordance with the following specifications: Specification 11312, "Leachate Pumps," Specification 15021, "High-Density Polyethylene Pipe," Specification 15060, "Piping General," and Specification 15992, "Piping Leakage Testing" (SPC-1476). In general, the leachate pumps area will be excavated and the piping will be excavated, placed, tested, and backfilled. Concrete thrust blocks, electrical controls, and monitoring equipment will also be placed in order to support the leachate recovery system.

5.3.9.5 Site Roadways and ICDF Landfill Access Ramps. The ICDF roadway will be constructed with asphaltic concrete and will accommodate the movement of waste transport vehicles having a maximum single axle weight of 20,000 pounds. Roadways will be designed in accordance with the Idaho Transportation Department, Division of Highways, Standard Specification of Highway Construction. Site roadways will follow the lines and grades established in the plans.

Haul roads will be constructed within the ICDF landfill Cell 1 to provide a clean haul road to the active disposal area. Initially, haul roads will be constructed to provide access across the operations layer to the initial disposal area in the northwest corner of Cell 1. Subsequent haul roads will be built up, graded, and compacted to correspond with the changing cell elevations as the cell is being filled with wastes. Because fill placement may be occurring on several layers at a time, subsequent haul roads will be constructed on top of the compacted waste fill to allow access to the various layer of fill construction. Haul roads that are placed on top of waste fill will consist of a separation layer of clean fill, called an operational layer, so that the integrity of the haul road is maintained. Haul roads will be a minimum of 1 ft thick and consist of 6 in. minimum of compacted granular fill (operations layer) and a 6-in. upper layer of crushed rock. Haul roads will typically be 30 ft wide to allow two-way traffic with adequate turning radius.

5.3.9.6 Drainage Culverts and Ditch Areas. Drainage culverts and ditch areas will be excavated as shown in the drawings (Appendix Z) and as needed to support the O&M water management.

5.3.9.7 Crest Pad(s) and Crest Pad Buildings. The crest pad for the ICDF landfill is located on the north side of the landfill. The crest pad for the ICDF evaporation pond is also located on the north side of the evaporation pond. The subgrade and foundation for the crest pad buildings will be prepared according to Specification 02315, "Fill and Backfill" (SPC-1476). Earth fill placed beneath future buildings will have a maximum particle size of 3 in. in the greatest dimension. Earth fill will be placed in lifts of 6 in. maximum compacted thickness and each lift compacted to a minimum of 95% relative compaction. Coordination will be required between the earthwork, piping, and instrumentation required at the crest pad location.

The crest pad buildings contain the instrumentation and system components for the LCS. All system components within the crest pad buildings will be enclosed, including, but not limited to, sump pipes, headers, flow meters, sample ports, VARVs, etc. Crest buildings will be designed and constructed in accordance with the DOE-ID Architectural Engineering Standards (DOE-ID 2000d). A prefabricated pre-engineered metal building will be furnished and installed complete and as shown in the drawings (Appendix Z) and as specified in Specification 13122, "Metal Building Systems Buildings" (SPC-1476).

The crest pad buildings support the function of the landfill and the evaporation pond. The crest pad buildings are positioned at the crest of both the landfill and the evaporation pond, and house the controls for the pumps, sumps, and monitoring equipment. The crest pad building at the evaporation pond will have the ability to sample leachate prior to leachate being sent to the evaporation pond. The crest pad building at the evaporation pond will house and work in conjunction with the landfill operations to control leachate being pumped into the evaporation pond.

Construction of the crest pad buildings will be performed after the evaporation pond berms are constructed. The foundation for the crest pad building will be shaped and compacted as shown in the specifications (Appendix Y) and drawings (Appendix Z). Footings will be poured and metal buildings will be constructed and coordinated with the supporting leachate instrumentation and piping. Power and water will be brought to the crest buildings as shown in the drawings (Appendix Z). All instrumentation and piping will be tested prior to acceptance. The crest pad buildings must be completed prior to waste placement into the landfill.

5.3.9.8 Heating and Ventilation for Crest Pad Buildings. Heating and ventilation for the crest pad buildings is required to protect the instrumentation and equipment from harsh weather conditions. Natural draft ventilation will be provided in the design of crest pad buildings for warm-weather operations. Appropriate heating and insulation will be provided for freezing cool-weather operations and cooling for warm-weather operations as necessary for specified instrumentation. Heating and ventilation

will follow the drawings (Appendix Z) and construction will be in accordance with Specification 13122, "Metal Building Systems," and all Division 15 and Division 16 specifications as necessary (SPC-1476), which includes but is not limited to Specification 16005, "Electrical."

5.3.9.9 ICDF Site Monitoring Instrumentation. ICDF instrumentation is used to monitor and pump the leachate recovery and the leachate unloading/loading station. The monitoring instrumentation consists of the control instrumentation in the crest pad building and the leachate unloading/loading station control instrumentation. ICDF site monitoring instrumentation will follow Specifications 13401, "Process Instrumentation and Control Systems;" 16005, "Electrical;" and 16480, "Low Voltage Motor Control" (SPC-1476). Work will include engineering, furnishing, installing, calibrating, adjusting, testing, documenting, starting up, and training for a complete PICS.

5.3.9.10 Components and Facilities for Pumping and/or Gravity Flow of Leachate. As leachate percolates through the waste, it will be collected in the LCS. The leachate gravity drains through gravel and collection pipes to the LCS sump, where it is pumped through a double-walled conveyance system to the evaporation pond. The LCS piping is constructed to allow leachate to recirculate to the landfill crest pad building and back to the landfill leachate sump for sampling purposes. The leachate pumping/transfer system includes, but is not limited to, pumps, sample ports, detection instrumentation, flow meters, and piping. At the evaporation pond, a loadout area with secondary containment to allow loading of leachate from the evaporation pond into tankers for transport to a treatment facility is provided for emergency purposes. Leachate piping and pumping will follow Specifications 11312, "Leachate Pumps;" 13401, "Process Instrumentation and Control Systems;" 15021, "High-Density Polyethylene Piping;" 15060, "Piping – General;" and 15992, "Piping Leakage Testing" (SPC-1476).

5.3.10 Test Pad

The discussion of test pad construction presented in this section is separate from the test pad construction that was performed as part of Stage I construction. During Stage I construction, a preliminary test pad was constructed at the Rye Grass Flats area. A flat test pad was constructed near the ICDF landfill Cell 1 site. Lifts were placed at the test pad, compacted, and tested to ensure appropriate compaction requirements were met. The test pad constructed during Stage I was used to develop the specifications (SPC-1476) necessary for Stage II construction. Testing details of the Stage I test pad are contained in EDF-2899.

Construction of the sloped soil bentonite test pad will be coordinated with the construction of the landfill and the excavation of the Rye Grass Flats Borrow Area. A sloped test pad for the SBL will be constructed on a 3:1 slope as specified to determine acceptable processing, placement, and compaction methods to produce a low-permeability SBL in accordance with Specification 02666, "Soil Bentonite Liner" (SPC-1476). The location of the test pad will be shown in the drawings (Appendix Z).

The test pad will be constructed with the same soil materials, design specifications, equipment, and procedures as proposed for the full-scale landfill. The test pad will be constructed on a 3 horizontal to 1 vertical side slope to evaluate compaction methods and performance on the side slope. So that the test pad will accurately represent the performance of the full-scale landfill, the following guidelines will be followed.

The test pad will be constructed at least four times wider than the widest piece of construction equipment used to build the test pad or 40 ft minimum. This is required to ensure a sufficient representative area for testing, avoiding the edges of the test pad. The test pad may be subdivided into "lanes" to facilitate evaluation of different compaction methods. However, the width of any individual lane will be no less than twice the width of the widest piece of construction equipment. The test pad will

be long enough to allow construction equipment to achieve normal operating speed before reaching the area that will be used for testing or 80 ft minimum (whichever is greater). The test pad will be constructed with at least six lifts to evaluate the methodology used to tie lifts together in accordance with Specification 02666, "Soil Bentonite Liner" (SPC-1476).

No SBL will be placed on slopes until the test pad has been constructed and the results from all test methods indicate that the SBL will satisfy all requirements specified and the testing requirements of the *INEEL CERCLA Disposal Facility Construction Quality Assurance Plan for Excavation and Constructing and Testing of Clay Liner and Test Pad* (DOE-ID 2001d). After all testing has been completed and approved, the material in the test pad can be used for liner construction provided that the material satisfies the requirements of the SBL specification.

5.3.11 Earthwork

The earthwork on this project will be defined as the following:

- Excavation of the Rye Grass Flats Borrow Area and construction of the sloped soil bentonite test pad on a 3:1 slope
- Hauling, mixture, and placement of the soil bentonite clay
- Excavation/backfill of the ICDF landfill and ICDF evaporation pond
- Excavation/backfill of the haul roads required for this project
- Excavation/backfill of the crest pad building foundations
- Excavation/backfill for the leachate collection piping and utility piping.

The earthwork activities will follow the project schedule included as Appendix AA and as directed by the construction manager. For each designated work area or portion of the work sequence, earthwork will only occur after adequate erosion and sediment controls are in place. Dust control measures will be established and utilized as necessary to control dust. If an area has not been cleared and grubbed, then clearing and grubbing will be the initial earthwork activities. Care will be taken to protect existing vegetation that does not need to be removed. All earthwork will be performed in accordance with the project specifications (SPC-1476) and the project design drawings (Appendix Z).

5.3.12 ICDF Landfill Construction

The ICDF landfill construction will follow the project schedule (Appendix AA), drawings (Appendix Z), specifications (SPC-1476), and BBWI, INEEL, and DOE regulations. The ICDF landfill will be built in two phases: construction of Cell 1 and construction of Cell 2. The total volume of wastes that is planned to be disposed at the ICDF landfill over its operating lifetime will be 510,000 yd^3. Waste proposed for disposal at the ICDF landfill consists of low-level waste, hazardous waste defined under RCRA, waste defined under TCSA, including PCBs, and mixed waste (a combination of radioactive and hazardous types). Wastes are expected to be predominantly contaminated soils from OU 3-13 and other areas within INEEL, debris that is stored in the Staging and Storage Area (SSA) and building demolition debris, and other wastes that are shown to meet the ICDF Landfill WAC (DOE-ID 2002b). The construction activities for the ICDF landfill will be defined as the following:

- Excavation/fill of Cell 1

- Subgrade preparation
- Placement of required leachate piping
- Load/haul/placement of the CCL
- Construction of the ICDF landfill liner
- Acceptance of the ICDF landfill liner
- Construction of the Crest Pad and Crest Pad Buildings
- Load/haul/compaction of haul roads into the ICDF landfill Cell 1
- Load/haul placement of wastes
- Load/haul/place/compact ICDF landfill operations layer.

Construction will initiate with Cell 1. Construction of Cell 2 will begin when Cell 1 nears or has reached capacity, or when other project considerations indicate construction should be initiated. Although the design of Cell 2 is addressed in this RD/CWP, the construction of Cell 2 is not a part of this RD/CWP.

5.3.13 ICDF Landfill Liner Construction

The ICDF landfill liner has been designed to contain INEEL-generated wastes that will be placed in Cell 1 and Cell 2. The ICDF landfill liner is a composite system consisting of both a primary and secondary geomembrane that will prevent migration of hazardous wastes outside of the liner system. The liner will be constructed separately for each landfill cell. Scheduling of the Cell 2 construction will occur at a later date, after Cell 1 has been in operation, is nearing or has reached capacity, or when other project considerations indicate construction should be initiated. Installation of the liner for Cell 1 will be in strict accordance with the specifications (SPC-1476) and the *INEEL CERCLA Disposal Facility Construction Quality Assurance Plan* (DOE-ID 2002f). The construction activities for the ICDF landfill liner construction will be defined as the following:

- Construct secondary leak detection recovery system (SLDRS)
- Load/haul/place/compact clay layer on prepared subgrade
- Place secondary geomembrane
- Place leak detection recovery system (LDRS) gravel, piping, and instrumentation
- Place geocomposite LDRS
- Place GCL
- Place primary geomembrane
- Construct the leachate collection recovery system (LCRS)
- Place geotextile cushion

- Load/haul/place/compact operations layer.

Construction of the ICDF landfill liner will require coordination for earthwork, geomembranes, geotextiles, gravel, piping, and instrumentation. A 3-ft thick operations layer will be placed over all clay liner sections constructed prior to winter shutdown. If construction is expected to occur during periods of potential soil freezing (after November 1), a decision will be made by October 1 to determine minimum requirements for protection of the clay liner.

5.3.14 ICDF Evaporation Pond Construction

The ICDF evaporation pond is designated as a CAMU in accordance with the substantive requirements of IDAPA 58.01.05.008 (40 CFR 264.552 and 40 CFR 264 Subpart K and CC) for the purpose of managing ICDF landfill leachate, other aqueous wastes generated as a result of operating the ICDF Complex, and INEEL CERCLA aqueous wastes that meet the evaporation pond WAC. The evaporation pond will accept ICDF landfill leachate and potentially contaminated aqueous waste streams generated from the INTEC and other INEEL CERCLA actions, development water from monitoring well drilling operations, and secondary aqueous wastes generated from waste processing and decontamination activities in the SSSTF and other INEEL CERCLA projects. Wastes accepted in the ICDF evaporation pond will meet the ICDF Evaporation Pond WAC (DOE-ID 2002c).

The ICDF evaporation pond system consists of two 2,200,000-gallon capacity ponds that will contain the aqueous wastes. The pump system will track the volume of waste disposed to the pond.

Construction of the ICDF evaporation pond will be similar to the construction of the ICDF landfill and will require a coordinated effort. The construction activities for the ICDF evaporation pond will be defined as the following:

- Excavation of the ICDF evaporation pond
- Subgrade preparation
- Load/haul/placement of the structural fill
- Construction of the ICDF evaporation pond liner
- Acceptance of the ICDF evaporation pond liner
- Construction of the crest pad building
- Installation and testing of the leachate collection piping and instrumentation.

5.3.15 ICDF Evaporation Pond Liner Construction

The ICDF evaporation pond has been designed to contain landfill leachate and other aqueous wastes as stated in Section 5.3.14. The ICDF evaporation pond liner serves to prevent migration of hazardous constituents and allow leak detection. The current design of the ICDF evaporation pond lining system includes an operations layer and a composite liner system, consisting of three geomembranes (sacrificial, primary, and secondary) and two GCLs (primary and secondary).

The construction activities for the ICDF evaporation pond liner construction will be defined as the following:

- Load/haul/place/compact structural fill, comprised of material from Rye Grass Flats, on prepared subgrade
- Place secondary GCL
- Place secondary geomembrane
- Place LDRS gravel, piping, and instrumentation
- Place geocomposite LDRS
- Construct operations layer—0.9 m (3 ft)
- Place primary GCL
- Place primary geomembrane
- Place sacrificial geomembrane.

The upper HDPE geomembrane is a sacrificial liner that provides protection from ultraviolet light and a measure of puncture protection to the upper, primary geomembrane. A GCL is provided as equivalent protection to one layer 3 ft of 1×10^{-7} cm/sec clay (beneath the secondary geomembrane) to allow the pond to function through temperature extremes at the INEEL (EDF-ER-312). The evaporation ponds are designed for operating periods of 15 years for the active life of the landfill, and 30 years for post-closure.

5.3.16 Reclamation Seeding

Reclamation and seeding will take place in all disturbed soil areas as described in the specifications (SPC-1476) and shown in the drawings (Appendix Z). The soils will be tilled a minimum depth of 6 in. and a minimum of 6 in. of topsoil will be tilled into the seedbed. The seedbed will be firm below seeding depth, well pulverized, and loose on top. It will be free of clods and weeds.

Reclamation and seeding will be in accordance with Specification 02920, "Reclamation and Revegetation" (SPC-1476). Reclamation and revegetation will be performed in accordance with the guidelines specified in *Guidelines for Revegetation of Disturbed Sites at the INEL* (DOE-ID 1989). The work for seeding will be done between October 10 and November 30. Specific ideal seeding times within these windows will be as required for proper seedbed preparation.

5.3.17 Demobilization

Following completion of the ICDF landfill and ICDF evaporation pond construction, equipment and personnel will demobilize from the site. The office trailer(s) and equipment will be removed from the site. Temporary fencing and signage will also be removed and disposed appropriately.

5.3.18 Institutional Controls

Field activities conclude with the establishment of institutional controls. Institutional controls at the ICDF Complex are intended to prevent inadvertent intrusion and restrict access. Fencing and signs will be installed to protect the ICDF Complex.

Written notification of the RA will be included in the facility master plan, prohibiting any activities that would interfere with the remedial activities. A copy of the notification will be given to the BLM along with a request that such notification will be placed in their property management records. The DOE will provide written verification to the EPA, and the IDEQ that notifications, including BLM notification, have been fully implemented, in accordance with the ROD (DOE-ID 1999).

5.3.19 Transportation, Placement, and Compaction of Waste Layers

The transportation, placement, and compaction of layers will follow "Waste Placement Mapping Plan" (EDF-ER-322) and "Waste Placement Plan" (EDF-ER-286). Transportation of soils and wastes will be done primarily by haul trucks. Haul trucks leaving the SSSTF will carry wrapped wastes in clean trucks on haul roads of clean fill material into the landfill. Within the landfill, haul roads will be constructed of clean operational fill, which will be inspected and maintained clean. The haul trucks will be directed to designated unloading areas. The haul trucks, while remaining in a clean area, will unload contaminated loads into the edge of the contamination zone, where designated landfill equipment will push and compact the material into its final destination. If a haul truck is found to become contaminated, it will be cleaned at the landfill and generated waste-contaminated materials from cleaning the haul truck will be placed into the landfill, as long as the waste meets the landfill WAC. Waste placement will begin in the northwest corner of the landfill and will proceed to the northeast. Material will be spread in 1-ft lifts by a bulldozer and will be compacted by either a bulldozer or a compactor in accordance with internal operating procedures. Water may be added during both the spreading and compaction to produce a waste material that is near optimum moisture content to aid in compaction. Water conservation practices will be maintained to minimize waste, but contain dust and achieve compaction. Waste placement will be tracked according to a grid system in accordance with "Waste Placement Mapping" (EDF-ER-322) and will follow "Waste Placement Plan" (EDF-ER-286). Approved waste profiles will be stored in the project records.

5.3.20 Groundwater Monitoring

Existing data at INTEC show a presence of RCRA-listed wastes and radionuclides in perched water zones and the SRPA. It is noted that these contaminants may also be present in saturated zones underlying INTEC and the ICDF Complex. A groundwater monitoring plan (DOE-ID 2002e) has been developed to evaluate the presence of these contaminants. As part of the detection monitoring program, preliminary sampling will be performed to develop baseline data before operation of the ICDF Complex begins. Approximately 11 detection wells will be installed concurrent with the 2002 Stage II construction activities. The groundwater monitoring plan will describe the monitoring and sampling plans in detail. The work elements for drilling are described below.

5.3.20.1 Drilling Work Elements

As part of the detection monitoring program, monitoring wells will be installed during the Stage II construction season to determine existing background data associated with Group 4 (perched water) and Group 5 (SRPA) contamination. Installation is to begin on June 1, 2002, and will be completed on or about September 30, 2002. The groundwater monitoring plan describes the drilling and sampling plan, and is briefly reviewed below.

Five new wells will be installed to detect contaminants in the SRPA, using the following assumptions:

- Two new wells will be installed downgradient of the evaporation pond.

- Three new wells will be installed downgradient of the landfill cells.
- The wells will be located approximately 66 ft. (20 m) south of the edge of the construction road to allow construction vehicles to maneuver without damaging the wells.
- Drilling holes will be logged to look for saturated zones and identify interbeds and marker beds.
- Wells will be screened for 40 ft. below the top of the aquifer to allow for fluctuating water levels over the course of the monitoring plan.

Six wells (PW-15 through PW 20) will be installed in the perched water zones under the following assumptions:

- Perched water wells will be placed in locations around and downgradient of the landfill and evaporation ponds.
- A maximum of three perching zones will be completed in each borehole.
- If perched water occurs when drilling wells, complete nested wells in each saturated zone. Nested wells will be grouted and at each area where perched water is encountered.

5.3.20.2 Groundwater Monitoring Plan

Groundwater monitoring will be conducted for the ICDF Complex in the SRPA and in the unsaturated zone beneath the ICDF Complex to determine whether or not ICDF waste disposal operations have resulted in a release of contaminants to the environment beneath the landfill or evaporation pond that exceed RAOs in the SRPA. Corrective actions will be evaluated and implemented, as necessary, in the event a release is identified through the groundwater monitoring program.

The ICDF Complex groundwater monitoring program will be conducted in accordance with the groundwater monitoring plan developed for the project (DOE-ID 2002e) (Appendix S). Five decision inputs have been developed in the groundwater monitoring plan to provide the necessary data to determine whether environmental releases from ICDF Complex waste disposal operations exceed RAOs in the SRPA. The decision inputs are identified in the groundwater monitoring plan (DOE-ID 2002e). Monitoring well locations and sampling frequency are also identified in the groundwater monitoring plan Samples collected as part of the groundwater monitoring program will be analyzed for the constituents indicated in the groundwater monitoring plan.

The target analyte list will be maintained for the life of the landfill. Additional analytes may be added based on the results of LCS sampling results.

In addition to the groundwater sampling that will be performed in accordance with the groundwater monitoring plan, sump sampling will be conducted to collect samples from both the LCS sump and the tertiary leak detection sumps. Samples will be collected no less frequent than annually, and will be taken following the expected maximum annual precipitation event.

5.3.21 Leachate Sampling and Management

The O&M plan for the ICDF landfill and evaporation pond (DOE-ID 2001f) includes details about leachate system operations, leachate system maintenance, and leachate sample collection and analysis. Leachate sample analysis will be performed to provide a signature of the landfill leachate, which can be

used in conjunction with samples collected as part of the groundwater monitoring program to determine whether an environmental release from the landfill or evaporation pond has occurred. Analytical results from the leachate can also provide information about the leachate quality over time, and be used as an indicator of potential problems in the landfill. For example, if a contaminant is detected in the leachate that is unique to a particular waste stream, it may be an indicator of a localized liner breach. Data Quality Objectives for the leachate sampling and analysis approach are presented in the O&M plan (DOE-ID 2001f). The O&M Plan is not attached to this RD/CWP, but it will be incorporated into the ICDF Complex RAWP.

5.4 Field Oversight/Construction Management

The DOE-ID remediation project manager is responsible for notifying the EPA and IDEQ of major project activities (e.g., project start-up or closeout) and other project activities, as deemed appropriate, DOE-ID serves as the single interface point for all routine contact between the EPA and IDEQ and the INEEL Contractor.

The INEEL Contractor is responsible for field oversight and construction management services for this project and provides health and safety, QA, and landlord services. A project organization chart and associated position description are provided in the construction HASP.

Visitors to the project site who wish to observe the ICDF landfill and ICDF evaporation pond construction must meet badging and training requirements necessary to enter INEEL facilities. Project-specific training requirements for visitors are described in the construction HASP.

5.5 Inspections

The following sections describe the inspections planned for the ICDF landfill and ICDF evaporation pond and associated components following their construction and prior to waste placement. Ongoing inspections will coordinate with the completion of waste placement in Cell 1, the completion of construction on Cell 2, the completion of waste placement in Cell 2, and the final cap of the ICDF landfill as well as the closure of the ICDF Complex.

During the construction phase of the ICDF landfill and ICDF evaporation ponds, additional inspections will also be performed. At their discretion, the Agency project managers or their designees may inspect the site during the construction phase to assess compliance with the RD and the procedures outlined in the CWP. These inspections may occur at any time during construction.

5.5.1 Construction Quality Inspections

Inspections for construction QC will be conducted in accordance with the *ICDF Construction Quality Assurance Plan* (DOE-ID 2002f) for the ICDF landfill and ICDF evaporation pond construction. These inspections are accomplished to ensure that all construction activities are in compliance with project specifications (SPC-1476) and drawings (Appendix Z). Construction QA and QC will be performed continuously during construction.

Construction QA that will be performed for the ICDF landfill and evaporation pond construction has been developed to demonstrate that the waste containment systems (e.g., landfill and evaporation pond liners, LCSs, etc.) are constructed in accordance with the design drawings (Appendix Z) and project specifications (SPC-1476). This will ultimately ensure that the waste containment systems are constructed in accordance with the design requirements (Section 2 of this RD/CWP) and the ARARs specified in the ROD (DOE-ID 1999). An independent third party will perform the construction QA.

Construction QC will also be performed during the ICDF landfill and evaporation pond construction for those project components that are not part of the waste containment systems. For example, asphalt testing for access roads will be performed to ensure that the road is constructed in accordance with the design drawings (Appendix Z) and project specifications (SPC-1476). Quality control testing does not affect ARAR compliance, but is a measure of the construction in relation to INEEL standards. Additional quality control testing may be performed in conjunction with QA testing, when required to meet INEEL standards, or when prudent to ensure QA testing requirements are met.

In any case that construction QA or QC testing fails, the construction component will be corrected to ensure compliance with the project specifications (SPC-1476), design drawings (Appendix Z), ARARs, and INEEL standards.

5.5.2 Prefinal Inspection

A prefinal inspection is conducted by the Agency project managers at, or prior to, completion of the ICDF landfill and ICDF evaporation pond construction. The Prefinal Inspection Checklist will be developed for use by the Agencies while conducting the inspection. The checklist encompasses the construction elements significant to meeting the ROD requirements and identifies specific activities, procedures, or other items—agreed on by all parties to be inspected—that constitute acceptance of the construction activities. The DOE-ID notifies the Agencies approximately two weeks prior to the prefinal inspection date.

5.5.3 Prefinal Inspection Report

Following the prefinal inspection, the Prefinal Inspection Report is prepared and submitted to the Agencies as a secondary document. Although DOE-ID responds to comments received from EPA and IDEQ, the Prefinal Inspection Report is not revised. The comments are resolved in the Final Inspection Report, which is included in the Draft Remedial Action Report, a primary document, in accordance with Section 8.4 of the FFA/CO (DOE-ID 1991). The Prefinal Inspection Report includes the following:

- Names of inspection participants
- Completed inspection checklist identifying deficiencies and/or outstanding RA requirements
- Outstanding construction requirements
- Corrective action required to resolve identified items
- Schedule for completion of corrective actions
- Date of final inspections.

All of the deficiencies and outstanding items, along with the actions required to resolve them, are identified and approved by the Agencies during the Prefinal Inspection. The Prefinal Inspection Report then documents any unresolved items and the action(s) required to resolve them.

5.5.4 Final Inspection

The final inspection is conducted following demobilization, when all excess materials and nonessential construction equipment have been removed from the site. Some equipment may remain on-site to repair items observed during the final inspection. The final inspection, conducted by the Agency

project managers, confirms the resolution of all outstanding items identified in the prefinal inspection and verifies that the ICDF landfill and evaporation ponds have been completed in accordance with the requirements of the ROD (DOE-ID 1999).

5.5.5 System Operability Testing and Startup

System operability testing and startup activities for the ICDF landfill and ICDF evaporation pond are combined into the ICDF Complex testing and startup work scope. Priorities are based on the construction completion dates and overall complex startup planning requirements.

5.6 Operations and Maintenance Plan

ICDF landfill and evaporation pond O&M will follow the O&M Plan (DOE-ID 2001f) that has been developed for the ICDF landfill and evaporation pond. The O&M Plan will be included in the ICDF Complex RAWP.

5.7 Waste Minimization Plan

Wastes will be generated as a result of the activities conducted during construction. Wastes expected to be generated include the following:

- Personal protective equipment
- Equipment spills
- Liquids from equipment decontamination
- Fencing materials
- Analytical residues
- Sample containers
- Hydraulic spills
- Miscellaneous wastes.

Waste minimization will be in accordance with the *INEEL CERCLA Disposal Facility Construction Waste Management Plan* and the INEEL Pollution Prevention Plan (DOE-ID 2000e).

Waste minimization for this project will primarily be achieved through design and planning to ensure efficient operations and avoid the generation of unnecessary wastes. This may include, but will not be limited to, the following:

- Reusing items when practical
- Segregating reusable items
- Substituting recyclable or incinerable items for disposal items

- Minimizing and avoiding use of hazardous chemicals
- Segregating contaminated from uncontaminated waste.

5.8 Project Cost Estimate

The project cost estimates for the ICDF landfill and ICDF evaporation pond construction, and O&M, are included in Appendix BB. The costs may be revised during subsequent submittals of this document to reflect the most current estimate.

5.9 Project Schedule and Sequencing

The project schedule for the ICDF landfill and the evaporation pond is provided in Appendix AA of this document. The project schedule covers all project tasks from the RD/RA SOW through completion of the RA. Administrative and document preparation activities are based on an eight-hour day, five-day week, while field activities are based on a 10-hour-day, four-day week. The schedule does not include any contingency for delay to the schedule due to late or slow document reviews, or for field activities experiencing loss of productivity because of adverse weather conditions.

5.10 Construction Health and Safety Plan

The construction HASP was prepared specifically for the tasks and conditions expected during implementation of this project. The HASP, which may be updated as site and project conditions dictate, includes the following elements:

- Task site responsibilities
- Personnel training requirements
- Occupational medical program and medical surveillance
- Safe work practices
- Site control and security
- Hazard evaluation
- Personal protective equipment
- Decontamination and radiological control
- Emergency response plan for the task site(s).

5.11 Waste Management Plan

Wastes resulting from the construction of the ICDF Complex will be managed on-Site as CERCLA waste in accordance with the final OU 3-13 ROD, *ICDF Construction Waste Management Plan* (DOE-ID 2002g), the associated disposal facility WAC, and other appropriate regulations, as necessary. All ICDF landfill and ICDF evaporation pond construction activities take place within the WAG 3 AOC

to allow flexibility in managing the consolidation and remediation of wastes without triggering LDRs, in accordance with the OU 3-13 ROD (DOE-ID 1999).

5.11.1 Construction Waste Management

Management of wastes generated from construction of the ICDF landfill and ICDF evaporation pond are addressed in the *ICDF Construction Waste Management Plan* (DOE-ID 2002g) provided as an attached document to this RD/CWP. The WMP provides identification of each of the waste streams, describes waste minimization actions, and provides requirements for waste transportation, waste storage, and ultimate disposal.

5.11.2 Operations Waste Management

Waste generated from the operations of the ICDF Complex will be addressed in the ICDF Complex Waste Management Plan. This plan will describe the anticipated waste streams, detail the waste characterization actions, and provide the requirements for waste minimization, packaging, transportation, storage, and ultimate disposition. The ICDF Complex WMP will be included with the ICDF Complex RAWP.

5.12 Spill Prevention/Response Program

During the ICDF landfill and ICDF evaporation pond construction, all hazardous materials are stored and handled in a safe manner to prevent leaks and spills. Preventative spill containment is required and implemented per the applicable material safety data sheets and manufacturers' recommendations. Any inadvertent spill or release of potentially hazardous materials (i.e., equipment fluids), is subject to the substantive requirements in the following:

- INEEL Emergency Plan RCRA Contingency Plan (PLN-114)
- INEEL Emergency Preparedness—Addendum 2, Idaho Chemical Processing Plant (PLN-114-2) as described in the HASP for construction of the ICDF landfill and ICDF evaporation pond, and as described in the ICDF operations HASP (INEEL 2002a).

During operations at the ICDF landfill and ICDF evaporation pond, the spill prevention/response program falls under the ICDF Complex Spill Prevention/Emergency Response Program, as described in the *Health and Safety Program for INEEL CERCLA Disposal Facility Operations* (INEEL 2001a). This emergency response plan addresses Operation Safety and Health Administration "emergency response" as defined by 29 CFR 1926.65, "Hazardous Waste Operations and Emergency Response," and DOE "emergencies" as defined by DOE Order 151.1A, "DOE Comprehensive Emergency Management System," and DOE Order 232.1A, "Occurrence Reporting and Processing of Operations Information." This response plan is implemented in concert with the INEEL Emergency Plan RCRA Contingency Plan (PLN-114), which has been revised to include the ICDF Complex.

The INEEL Emergency Plan RCRA Contingency Plan may be activated in response to events occurring at the INTEC or at the ICDF Complex or at the discretion of the emergency action manager (EAM). Once the INEEL plan is activated, ICDF operations personnel will follow the direction and guidance communicated by the EAM.

5.13 Remedial Action Report

The remedial action report will be prepared following demobilization and restoration of the site, and submitted to the agencies as a primary document. In accordance with the FFA/CO, the RA report will be submitted within 60 days of the final inspection. The RA report will include the following:

- A synopsis of the construction work defined in the RD/CWP and certifications that this work was performed.
- Any modifications made to the RD during the construction phase, including the purpose of the performed modifications and results of the modifications.
- Problems encountered during the construction and resolutions to these problems.
- Any outstanding items from the Prefinal Inspection Report that were identified and described; in responding to comments received, the Prefinal Inspection Report will not be revised, but rather will be finalized in the context of the RA report.
- Discussion of the results of the final inspection.
- O&M plan update.
- As-built drawings showing final contours and final configurations for crest pad buildings and associated equipment and instrumentation.
- Final total costs for this portion of the RA and a projection of future operational expenditures.

5.14 Closure Activities

The ICDF landfill and ICDF evaporation pond for the RA will be closed following final waste placement during the operational period. Closure of the ICDF landfill and ICDF evaporation pond will be in accordance with the ARARs identified in the ROD (DOE-ID 1999), and as described in the ARAR compliance strategy included with the Technical and Functional Requirements (TFR-71, Appendix CC). Closure plans and supporting information shall be provided to the Agencies prior to initiation of closure activities for Agency acceptance. Specific closure discussions regarding the ICDF landfill, evaporation pond, SSSTF, and ancillary facilities will be provided in the ICDF Complex RAWP. It is the goal to close all ICDF units under a “clean” closure, except for the ICDF landfill.

6. FIVE-YEAR REVIEW

The NCP (EPA 1990) requires a review of the selected remedy every five years where contamination is left in place above risk-based concentrations. This review evaluates the remedy to determine if it continues to protect human health and the environment. The operational life of the ICDF Complex is 15 years, but five-year reviews will be conducted at the site at least until 2095 (at the end of the DOE-ownership institutional control period). Five-year reviews may be suspended before that time if it is determined that institutional controls and reviews are no longer necessary. This RD/CWP does not identify elements of the five-year review. Rather, requirements for the first five-year review (as well as subsequent evaluations) will be developed and addressed in the ICDF Complex RAWP. All portions of OU 3-13 will be evaluated in a single periodic five-year review. Five-year reviews will note any changes in the physical configuration of the area, and will determine whether OU 3-13 can continue to be managed to achieve the remediation goals outlined in the OU 3-13 ROD. As part of the review process, the Agencies will periodically review the protectiveness of their decisions and adjust to updates in public protectiveness levels. ICDF landfill and evaporation pond closure requirements will include access restrictions with a buffer zone around the landfill, and access restrictions and institutional controls as long as the landfill contents remain a threat to human health and the environment.

7. REFERENCES

10 CFR 830.120, 1999, "Nuclear Safety Management," Section 120, "Quality assurance requirements," *Code of Federal Regulations*, Office of the Federal Register, January 1, 1999.

10 CFR 835, 1999, "Occupational Radiation Protection," *Code of Federal Regulations*, Office of the Federal Register, January 1, 1999.

29 CFR 1910, 1998, "Occupational Safety and Health Standards," *Code of Federal Regulations,* Office of the Federal Register, July 1, 1998.

29 CFR 1910.120, 1998, "Occupational Safety and Health Standards," Section 120, "Hazardous waste operations and emergency response," *Code of Federal Regulations,* Office of the Federal Register, July 1, 1998.

29 CFR 1926.65, 1999, "Safety and Health Regulations for Construction," Section 65, "Hazardous waste operations and emergency response," *Code of Federal Regulations*, Office of the Federal Register, July 1, 1999.

40 CFR 264, 1999, "Standards for Owners and Operators of Hazardous Waste Treatment, Storage, and Disposal Facilities," Subpart F, "Releases from solid waste management units," *Code of Federal Regulations,* Office of the Federal Register, July 9, 1999.

40 CFR 264, 1986, "Standards for Owners and Operators of Hazardous Waste Treatment, Storage, and Disposal Facilities," Subpart G, "Closure and post-closure sources," *Code of Federal Regulations*, Office of the Federal Register, May 1, 1986.

40 CFR 264, 1999, "Standards for Owners and Operators of Hazardous Waste Treatment, Storage, and Disposal Facilities," Subpart K, "Surface impoundments," *Code of Federal Regulations*, Office of the Federal Register, July 1999.

40 CFR 264, 1992, "Standards for Owners and Operators of Hazardous Waste Treatment, Storage, and Disposal Facilities," Subpart N, "Landfills," *Code of Federal Regulations*, Office of the Federal Register, January 1, 1992.

40 CFR 264,1999, "Standards for Owners and Operators of Hazardous Waste Treatment, Storage, and Disposal Facilities," (Subpart CC), "Air emission standards for tanks, surface impoundments, and containers," *Code of Federal Regulations,* Office of the Federal Register, July 1, 1999.

40 CFR 264.1080, 1999, "Standards for Owners and Operators of Hazardous Waste Treatment, Storage, and Disposal Facilities," Section 1080 (Subpart CC), "Air emission standards for tanks, surface impoundments, and containers," *Code of Federal Regulations,* Office of the Federal Register, July 1, 1999.

40 CFR 264.114, 1998, "Standards for Owners and Operators of Hazardous Waste Treatment, Storage, and Disposal Facilities," Section 114, "Disposal or decontamination of equipment, structures and soils," *Code of Federal Regulations*, Office of the Federal Register, September 1, 1988.

40 CFR 264.18, 1992, "Standards for Owners and Operators of Hazardous Waste Treatment, Storage, and Disposal Facilities," Section 18, "Location standards," *Code of Federal Regulations*, Office of the Federal Register, January 1, 1992.

40 CFR 264.221, 1992, "Standards for Owners and Operators of Hazardous Waste Treatment, Storage, and Disposal Facilities," Section 221, "Design and operating requirements," *Code of Federal Regulations*, Office of the Federal Register, January 1, 1992.

40 CFR 264.301, 1992, "Standards for Owners and Operators of Hazardous Waste Treatment, Storage, and Disposal Facilities," Subpart N, "Landfills," Section 301, "Design and operating requirements," *Code of Federal Regulations*, Office of the Federal Register, January 1, 1992.

40 CFR 264.310, 1986, "Standards for Owners and Operators of Hazardous Waste Treatment, Storage, and Disposal Facilities," Subpart N, "Landfills," Section 310, "Closure and post-closure sources," *Code of Federal Regulations*, Office of the Federal Register, May 1, 1986.

40 CFR 264.552, 1998, "Standards for Owners and Operators of Hazardous Waste Treatment, Storage, and Disposal Facilities," Section 552, "Corrective action management units," *Code of Federal Regulations*, Office of the Federal Register, November 1998.

40 CFR 268, 1999, "Land Disposal Restrictions," *Code of Federal Regulations,* Office of the Federal Register, July 1, 1999.

40 CFR 268.49, 1998, "Land Disposal Restrictions," Section 49, "Alternative LDR treatment standards for contaminated soil," *Code of Federal Regulations*, Office of the Federal Register, July 1, 1998.

40 CFR 761.75, 1999, "Polychlorinated Biphenyls (PCBs) Processing, Distribution in Commerce and Use Prohibitions," Section 75, "Chemical waste landfills," *Code of Federal Regulations,* Office of the Federal Register, July 1, 1999.

AASHTO, 2000, "Geotextile Specification for Highway Applications," M-288, 20th Edition, American Association of State Highway and Transportation Officials, January 2000.

ASCE 7-95, 1996, "Minimum Design Loads for Buildings and Other Structures," American Society of Civil Engineers, January 1996.

ASME NQA-1, 1997, "Quality Assurance Requirements for Nuclear Facility Applications," American Society for Mechanical Engineers, December 1997.

DOE, 1997, *Environmental Assessment and Plan for New Silt/Clay Source Development and Use at the INEEL,* DOE/EA-1083, U.S. Department of Energy.

DOE-ID, 2002a, "Remedial Design/Construction Work Plan for the Waste Area Group 3 Staging, Storage, Sizing, and Treatment Facility," DOE/ID-10889, Revision Draft, U.S. Department of Energy Idaho Operations Office, Idaho Falls, Idaho.

DOE-ID, 2002b, *Waste Acceptance Criteria for ICDF Landfill*, DOE/ID-10865, Rev. 2, U.S. Department of Energy Idaho Operations Office, Idaho Falls, Idaho, May 2002.

DOE-ID, 2002c, *Waste Acceptance Criteria for ICDF Evaporation Pond*, DOE/ID-10866, Rev. 2, U.S. Department of Energy Idaho Operations Office, Idaho Falls, Idaho, May 2002.

DOE-ID, 2002d, "ICDF Complex Operations Waste Management Plan," DOE/ID-10886, Draft Final, U.S. Department of Energy Idaho Operations Office, Idaho Falls, Idaho. April 2002.

DOE-ID, 2002e, *ICDF Complex Groundwater Monitoring Plan*, DOE/ID-10955, Rev 0, U.S. Department of Energy Idaho Operations Office, Idaho Falls, Idaho, May 2002.

DOE-ID, 2002f, *INEEL CERCLA Disposal Facility Construction Quality Assurance Plan*, DOE/ID-10851, Rev. 2, U.S. Department of Energy Idaho Operations Office, Idaho Falls, Idaho, May 2002.

DOE-ID, 2002g, *INEEL CERCLA Disposal Facility Construction Waste Management Plan*, DOE/ID-10958, Rev. 0, U.S. Department of Energy Idaho Operations Office, Idaho Falls, Idaho, May 2002.

DOE-ID, 2001a, *INEEL CERCLA Disposal Facility - Master Table of Documents (Title I),* DOE/ID-10847, Rev. 0, U.S. Department of Energy Idaho Operations Office, Idaho Falls, Idaho, July 2001.

DOE-ID, 2001b, *INEEL CERCLA Disposal Facility – Final Design, Excavation, and Test Pad - Master Table of Documents,* DOE/ID-10854, Rev. 0, U.S. Department of Energy Idaho Operations Office, Idaho Falls, Idaho, July 2001.

DOE-ID, 2001c, *INEEL CERCLA Disposal Facility – Master Table of Documents (60% Design Components),* DOE/ID-10925, Rev. 0, U.S. Department of Energy Idaho Operations Office, Idaho Falls, Idaho, November 2001.

DOE-ID, 2001d, *INEEL CERCLA Disposal Facility Construction Quality Assurance Plan for Excavation and Constructing and Testing of Clay Liner and Test Pad*, DOE/ID-10849, Rev. 0, U.S. Department of Energy Idaho Operations Office, Idaho Falls, Idaho, April 2001.

DOE-ID, 2001e, *Institutional Control Plan for the Idaho Nuclear Technology and Engineering Center, Waste Area Group 3, Operable Unit 3-13*, DOE/ID-10729, Rev. 0, U.S. Department of Energy Idaho Operations Office, Idaho Falls, Idaho.

DOE-ID, 2001f, "INEEL CERCLA Disposal Facility Complex Operation and Maintenance Plan," DOE/ID-10852, Rev. 1, Draft A, U.S. Department of Energy Idaho Operations Office, Idaho Falls, Idaho, October 2001.

DOE-ID, 2000a, *Remedial Design/Remedial Action Scope of Work for Waste Area Group 3, Operable Unit 3-13*, DOE/ID-10721, Rev. 1, U.S. Department of Energy Idaho Operations Office, Idaho Falls, Idaho.

DOE-ID, 2000b, *Conceptual Design Report for the INEEL CERCLA Disposal Facility and Evaporation Pond,* DOE/ID-10806, Rev. 0, U.S. Department of Energy Idaho Operations Office, Idaho Falls, Idaho.

DOE-ID, 2000c, *Geotechnical Report for the Conceptual Design of the INEEL CERCLA Disposal Facility at Waste Area Group 3, Operable Unit 3-13,* DOE/ID-10812, Rev. 0, Department of Energy Idaho Office Operations, Idaho Falls, Idaho.

DOE-ID, 2000d, *Architectural Engineering Standards*, Rev. 27, U.S. Department of Energy Idaho Operations Office, Idaho Falls, Idaho.

DOE-ID, 2000e, *INEEL Interim Pollution Prevention Plan*, DOE/ID-10333, Rev. 0, U.S. Department of Energy Idaho Operations Office, Idaho Falls, Idaho.

DOE-ID, 1999, *Final Record of Decision, Idaho Nuclear Technology and Engineering Center, Operable Unit 3-13,* DOE/ID-10660, Rev. 0, Department of Energy Idaho Operations Office, Idaho Falls, Idaho, U.S. Environmental Protection Agency Region 10, and State of Idaho Department of Health and Welfare.

DOE-ID, 1997, *Comprehensive RI/FS for the Idaho Chemical Processing Plan OU 3-13 at the INEEL – Part A, RI/BRA Report (Final)*, DOE/ID-10534, Rev. 0, U.S. Department of Energy Idaho Operations Office, Idaho Falls, Idaho.

DOE-ID, 1994, *Remedial Design and Remedial Action Guidance for the Idaho National Engineering Laboratory,* DOE/ID-12584-152, Rev. 2, U.S. Department of Energy Idaho Operations Office, Idaho Falls, Idaho.

DOE-ID, 1991, *Federal Facility Agreement and Consent Order for the Idaho National Engineering Laboratory*, U.S. Department of Energy Idaho Operations Office, U.S. Environmental Protection Agency Region 10, State of Idaho Department of Health and Welfare.

DOE-ID, 1989, *Guidelines for Revegetation of Disturbed Sites at the INEL,* DOE/ID-12114, U.S. Department of Energy Idaho Operations Office, Idaho Falls, Idaho.

DOE O 151.1A, "Comprehensive Emergency Management System," U.S. Department of Energy, November 1, 2000 (as promulgated as of December 1999).

DOE O 232.1, "Environmental, Safety, and Health Reporting," U.S. Department of Energy, September 30, 1995.

DOE O 232.1A, "Occurrence Reporting and Processing of Operating Information," U.S. Department of Energy, August 1, 1997.

DOE O 414.1, "Quality Assurance," U.S. Department of Energy, November 24, 1998.

DOE O 420.1, "Facility Safety," U.S. Department of Energy, November 22, 2000.

DOE O 435.1, "Radioactive Waste Management," U.S. Department of Energy, August 28, 2001.

DOE O 440.1A, "Worker Protection Management for DOE Federal and Contractor Employees," U.S. Department of Energy, March 27, 1998.

DOE O 470.1, "Safeguards and Security Programs," U.S. Department of Energy, September 28, 1995.

DOE O 5400.5, "Radiation Protection of the Public and the Environment," U.S. Department of Energy, January 7, 1993.

DOE O 5480.4, "Environmental Protection, Safety, and Health Protection Standards," U.S. Department of Energy, January 7, 1993.

DOE-STD-1020-96, "Natural Phenomena Hazards Design and Evaluation Criteria for Department of Energy Facilities," U.S. Department of Energy, January 1996.

DOE-STD-1021-96, "Natural Phenomena Hazards Performance Categorization Guidelines for Structures, Systems, and Components," U.S. Department of Energy, January 1996.

EDF-2899, 2002, "INEEL CERCLA Disposal Facility Test Pad Construction Report," Rev 0.,U.S. Department of Energy, Idaho Operations Office, Idaho Falls, Idaho, May 2002.

EDF-ER-264, 2001, "INEEL CERCLA Disposal Facility Design Inventory, Title I 30% Design Package," Revision 0, U.S. Department of Energy, Idaho Operations Office, Idaho Falls, Idaho, March 2001.

EDF-ER-265, 2001, "Air Space Volume Calculation," Rev. 0, Environmental Restoration Program, Idaho National Engineering and Environmental Laboratory, July 2001.

EDF-ER-266, 2002, "Subsurface Consolidation Calculations," Rev. 1, Environmental Restoration Program, Idaho National Engineering and Environmental Laboratory, May 2002.

EDF-ER-267, 2002, "Landfill Compaction Subsidence Study," Rev. 1, Environmental Restoration Program, Idaho National Engineering and Environmental Laboratory, May 2002.

EDF-ER-268, 2002, "Slope Stability Assessments," Rev. 1, Environmental Restoration Program, Idaho National Engineering and Environmental Laboratory, May 2002.

EDF-ER-269, 2002, "Leachate Generation Study," Rev. 0, Environmental Restoration Program, Idaho National Engineering and Environmental Laboratory, May 2002.

EDF-ER-271, 2002, "Evaporation Pond Sizing with Water Balance and Make-up Water Calculations," Rev. 1, Environmental Restoration Program, Idaho National Engineering and Environmental Laboratory, May 2002.

EDF-ER-272, 2001, "Soil Amendment Study," Rev 0., Environmental Restoration Program, Idaho National Engineering and Environmental Laboratory, June 2001.

EDF-ER-273, 2002, "Permeable Reactive Barrier Evaluation Study," Rev. 1, Environmental Restoration Program, Idaho National Engineering and Environmental Laboratory, May 2002.

EDF-ER-274, 2002, "Leachate/Contamination Reduction Time," Rev. 1, Environmental Restoration Program, Idaho National Engineering and Environmental Laboratory, May 2002.

EDF-ER-275, 2002, "Fate and Transport Modeling Results," Rev. 2, Environmental Restoration Program, Idaho National Engineering and Environmental Laboratory, May 2002.

EDF-ER-276, 2002, "Evaluation of Geotechnical Investigations and Calculations Required to Complete Design and Construction," Rev. 1, Environmental Restoration Program, Idaho National Engineering and Environmental Laboratory, May 2002.

EDF-ER 277, 2002, "Waste-Soil Design Ratio Calculations," Rev. 1, Environmental Restoration Program, Idaho National Engineering and Environmental Laboratory, May 2002.

EDF-ER-278, 2002, "Liner/Leachate Compatibility Study," Rev. 1, Environmental Restoration Program, Idaho National Engineering and Environmental Laboratory, May 2002.

EDF-ER-279, 2002, "Hydrologic Modeling of Final Cover," Rev. 2, Environmental Restoration Program, Idaho National Engineering and Environmental Laboratory, May 2002.

EDF-ER-280, 2002, "Landfill Leachate Collection System Design Analysis," Rev. 1, Environmental Restoration Program, Idaho National Engineering and Environmental Laboratory, May 2002.

EDF-ER-281, 2002, "Liner and Final Cover Long-Term Performance Evaluation and Final Cover Life Cycle Expectation," Rev. 1, Environmental Restoration Program, Idaho National Engineering and Environmental Laboratory, May 2002.

EDF-ER-282, 2002, "Seismic Evaluation of Landfill and Evaporation Pond," Rev. 1, Environmental Restoration Program, Idaho National Engineering and Environmental Laboratory, May 2002.

EDF-ER-286, 2002, "Waste Placement Plan," Rev. 1, Environmental Restoration Program, Idaho National Engineering and Environmental Laboratory, May 2002.

EDF-ER-290, 2002, "NESHAP Modeling for ICDF Complex," Rev. 1, Environmental Restoration Program, Idaho National Engineering and Environmental Laboratory, May 2002.

EDF-ER-311, 2002, Screening Level Ecological Risk Assessment for the INEEL CERCLA Disposal Facility, Rev. 1, Environmental Restoration Program, Idaho National Engineering and Environmental Laboratory, May 2002.

EDF-ER-312, 2001, "Pond Lining System Equivalency Analysis," Rev. 0 (60% Design Component), Environmental Restoration Program, Idaho National Engineering and Environmental Laboratory, November 2001.

EDF-ER-315, 2002, "IDAPA Air Compliance," Rev. 0, Environmental Restoration Program, Idaho National Engineering and Environmental Laboratory, May 2002.

EDF-ER-322, 2001, "Waste Placement Mapping," Rev. 0 (60% Design Component), Environmental Restoration Program, Idaho National Engineering and Environmental Laboratory, November 2001.

EDF-ER-323, 2001, "Evaporation Pond Berm Overtopping Analysis," Rev. 0 (60% Design Component), Environmental Restoration Program, Idaho National Engineering and Environmental Laboratory, November 2001.

EPA, 2000, *Requirements for Quality Assurance Project Plans*, EPA QA/R-5, U.S. Environmental Protection Agency.

EPA, 1995, *Quality Assurance and Quality Control for Waste Containment Facilities*, EPA/600/SR-93/182, U.S. Environmental Protection Agency.

EPA, 1994, *Estimating Radiogenic Cancer Risk*, EPA-402,R93-076, U.S Environmental Protection Agency.

IDAPA 58.01.05, 1994, "Rules and Standards for Hazardous Waste," Part 009, "Interim Storage Standards for Owners and Operators of Hazardous Waste Treatment, Storage, and Disposal Facilities," Idaho Administrative Procedures Act, Idaho Department of Environmental Quality (as promulgated February 11, 1994).

INEEL, 2001a, "Health and Safety Plan for INEEL CERCLA Disposal Facility Operations," INEEL/EXT-01318, Rev. 0, Draft, Idaho National Engineering and Environmental Laboratory, Idaho Falls, Idaho, December 2001.

INEEL, 2002, *Health and Safety Program for INEEL CERCLA Disposal Facility Operations*, INEEL/EXT-01-00033, Rev. 1, Idaho National Engineering and Environmental Laboratory, Idaho Falls, Idaho, May 2002.

ITD, 1999, "Standard Specifications for Highway Construction," State of Idaho Transportation Department, Division of Highways, 1999.

NEA, 1997, *Radiation in Perspective—Applications, Risks, and Protection*, Nuclear Energy Agency, Organization for Economic Cooperation and Development.

NFPA 70, 2001, "National Electrical Code," National Fire Protection Association, August 2, 2001.

NFPA 101, 2000, "Life Safety Code," National Fire Protection Association, February 2000.

NFPA 780, 2000, "Standard for Installation of Lightning Protection Systems," National Fire Protection Association, February 2000.

NOAA, 1989, *Climatology of the Idaho National Engineering Laboratory*, 2nd edition, National Oceanic and Atmospheric Administration.

PLN-114, 2001, "INEEL Emergency Plan RCRA Contingency Plan," Rev. 16, Emergency Preparedness Department, Idaho National Engineering and Environmental Laboratory.

PLN-114-2, 2001, "Emergency Preparedness—Addendum 2, Idaho Chemical Processing Plan," Rev. 80, Emergency Preparedness Department, Idaho National Engineering and Environmental Laboratory.

PLN-873, 2001, "Quality Program Plan for the INEEL CERCLA Disposal Facility Complex (Draft)," Rev. 0, Draft, U.S. Department of Energy Idaho Operations Office, Idaho Falls, Idaho.

PLN-962, 2002, "Storm Water Pollution Prevention Plan for the ICDF Landfill and Evaporation Pond," Rev. 0, U.S. Department of Energy Idaho Operations Office, Idaho Falls, Idaho, May 2002.

PLN-963, 2001, "Training Plan for the INEEL CERCLA Disposal Facility (Draft Title II)," Rev. 0, Draft A, U.S. Department of Energy Idaho Operations Office, Idaho Falls, Idaho.

SPC-1476, 2002, "Technical Specifications for the INEEL CERCLA Disposal Facility," Rev. 1, U.S. Department of Energy Idaho Operations Office, Idaho Falls, Idaho, May 2002.

TFR-71, 2002, "Technical and Functional Requirements - WAG 3 INEEL CERCLA Disposal Facility and Evaporation Pond," Rev. 2, U.S. Department of Energy Idaho Operations Office, Idaho Falls, Idaho, May 2002.

TFR-2520, 2002, "Technical and Functional Requirements for the INEEL CERCLA Disposal Facility (ICDF) Control and Integrated Waste Tracking System," Rev. 0, U.S. Department of Energy Idaho Operations Office, Idaho Falls, Idaho, May 2002.

UBC, 1997, "Uniform Building Code," International Conference of Building Officials, April 1997.

UNEP, 1985, *Radiological Doses, Effects, and Risks*, United Nations Environmental Program.

Appendix A

Leachate/Contaminant Reduction Time Study

EDF-ER-274

TO VIEW APPENDIX A SEE:

DOCUMENT ID NUMBER – EDF-ER-274, REV.01

Appendix B

Fate and Transport Modeling Results and Summary Report

EDF-ER-275

TO VIEW APPENDIX B SEE:

DOCUMENT ID NUMBER – EDF-ER-275, REV.02

Appendix C

Liner/Leachate Compatibility Study

EDF-ER-278

TO VIEW APPENDIX C SEE:

DOCUMENT ID NUMBER – EDF-ER-278, REV.01

Appendix D

Evaluation of Geotechnical Investigations Required to Complete Design & Construction

EDF-ER-276

TO VIEW APPENDIX D SEE:

DOCUMENT ID NUMBER – EDF-ER-276, REV.01

Appendix E

Seismic Evaluation of Landfill and Evaporation Pond

EDF-ER-282

TO VIEW APPENDIX E SEE:

DOCUMENT ID NUMBER – EDF-ER-282, REV.01

Appendix F

Subsurface Consolidation Calculations

EDF-ER-266

TO VIEW APPENDIX F SEE:

DOCUMENT ID NUMBER – EDF-ER-266, REV.01

Appendix G

Slope Stability Assessments

EDF-ER-268

TO VIEW APPENDIX G SEE:

DOCUMENT ID NUMBER – EDF-ER-268, REV.01

Appendix H

Landfill Compaction/Subsidence Study

EDF-ER-267

TO VIEW APPENDIX H SEE:

DOCUMENT ID NUMBER – EDF-ER-267, REV.01

Appendix I

Waste-Soil Design Ratio Calculations

EDF-ER-277

TO VIEW APPENDIX I SEE:

DOCUMENT ID NUMBER – EDF-ER-277, REV.01

Appendix J

Liner and Final Cover Long Term Performance Evaluation and Final Cover Life Cycle Expectation

EDF-ER-281

TO VIEW APPENDIX J SEE:

DOCUMENT ID NUMBER – EDF-ER-281, REV.01

Appendix K

Landfill Leachate Collection System Design Analysis

EDF-ER-280

TO VIEW APPENDIX K SEE:

DOCUMENT ID NUMBER – EDF-ER-280, REV.01

Appendix L

Evaporation Pond Sizing with Water Balance and Make-up Water Calculations

EDF-ER-271

TO VIEW APPENDIX L SEE:

DOCUMENT ID NUMBER – EDF-ER-271, REV.01

Appendix M

Hydrologic Modeling of Final Cover

EDF-ER-279

TO VIEW APPENDIX M SEE:

DOCUMENT ID NUMBER – EDF-ER-279, REV.02

Appendix N

IDAPA Preliminary Air Screening Results

EDF-ER-315

TO VIEW APPENDIX N SEE:

DOCUMENT ID NUMBER – EDF-ER-315, REV.0

Appendix O

NESHAP Modeling for the ICDF Complex

EDF-ER-290

TO VIEW APPENDIX O SEE:

DOCUMENT ID NUMBER – EDF-ER-290, REV.01

Appendix P

Waste Acceptance Criteria for the ICDF Landfill

DOE/ID-10865

TO VIEW APPENDIX P SEE:

DOCUMENT ID NUMBER – DOE/ID-10865, REV.02

Appendix Q

Waste Acceptance Criteria for the ICDF Evaporation Pond

DOE/ID-10866

TO VIEW APPENDIX Q SEE:

DOCUMENT ID NUMBER – DOE/ID-10866, REV.02

Appendix R

Screening Level Ecological Risk Assessment

EDF-ER-311

TO VIEW APPENDIX R SEE:

DOCUMENT ID NUMBER – EDF-ER-311, REV.01

Appendix S

ICDF Complex Groundwater Monitoring Plan

DOE/ID-10955

TO VIEW APPENDIX S SEE:

DOCUMENT ID NUMBER – DOE/ID-10955, REV.0

Appendix T

Waste Placement Plan

EDF-ER-286

TO VIEW APPENDIX T SEE:

DOCUMENT ID NUMBER – EDF-ER-286, REV.01

Appendix U

ICDF Test Pad Construction Report

EDF-2899

TO VIEW APPENDIX U SEE:

DOCUMENT ID NUMBER – EDF-2899, REV.0

Appendix V

Storm Water Pollution Prevention Plan for the ICDF Landfill and Evaporation Pond

PLN-962

TO VIEW APPENDIX V SEE:

DOCUMENT ID NUMBER – PLN-962, REV.0

Appendix W

INEEL CERCLA Disposal Facility Construction Waste Management Plan

DOE/ID-10958

TO VIEW APPENDIX W SEE:

DOCUMENT ID NUMBER – DOE/ID-10958, REV.0

Appendix X

INEEL CERCLA Disposal Facility Construction Quality Assurance Plan

DOE/ID-10851

TO VIEW APPENDIX X SEE:

DOCUMENT ID NUMBER – DOE/ID-10851, REV.02

Appendix Y

Technical Specifications for the INEEL CERCLA Disposal Facility

SPC-1476

TO VIEW APPENDIX Y SEE:

DOCUMENT ID NUMBER – SPC-1476, REV.01

Appendix Z

INEEL CERCLA Disposal Facility – Drawings

REVISIONS		
REV	DESCRIPTION	EFFECTIVE DATE:
0	APPROVED FOR CONSTRUCTION	14 MAY 2002

INEEL CERCLA DISPOSAL FACILITY
TITLE II DESIGN DRAWINGS

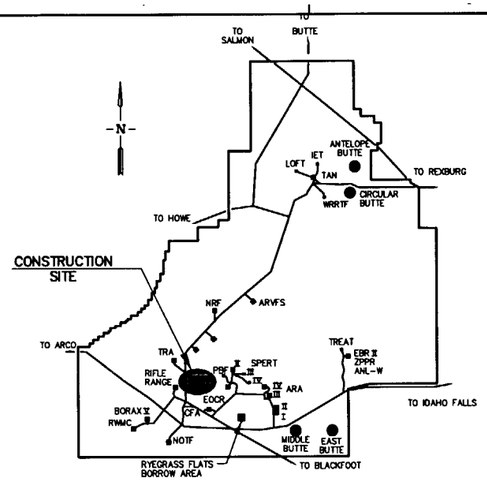

SITE MAP

NTS

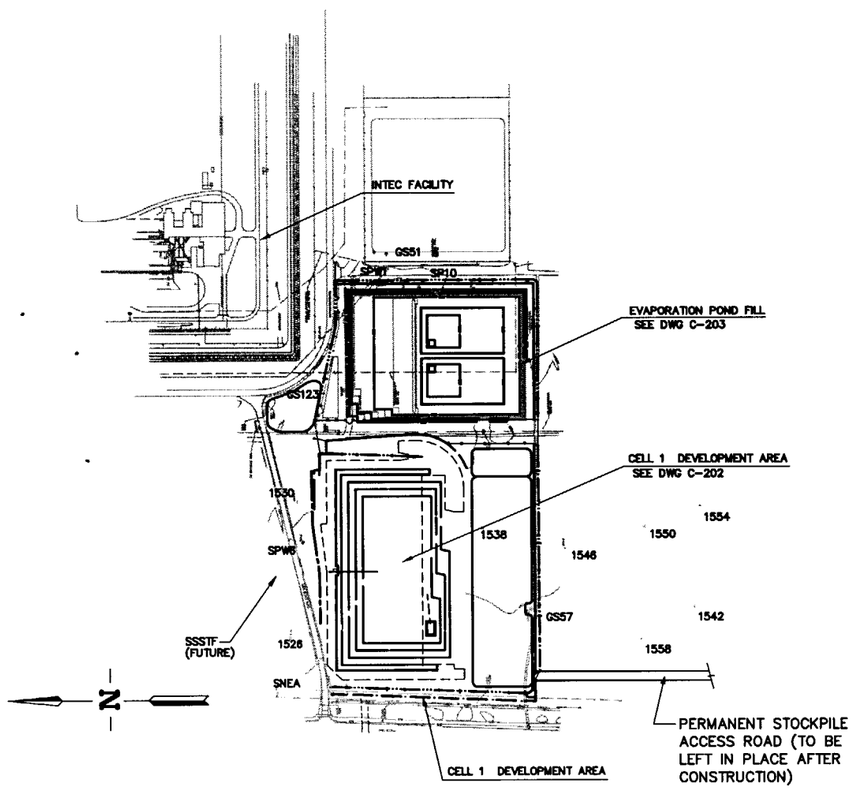

LOCATION MAP

NTS

NOTES:

1. THE DIMENSIONS, CONFIGURATION, AND LAYOUT OF THE ICDF FEATURES DEPICTED IN THIS DRAWING ARE FOR INFORMATIONAL PURPOSES ONLY. SEE DRAWINGS T-201 THROUGH EC-201 FOR LAYOUT, GRADING, AND EROSION CONTROL CONSTRUCTION REQUIREMENTS.
2. SEE DRAWING T-202 FOR TABLE OF SURVEY CONTROL POINTS SHOWN.

DRAWING INDEX

DWG. NO.	A-E SHEET NO.	REV	DRAWING TITLE	DWG NO.	A-E SHEET NO.	REV	DRAWING TITLE
	T-201	0	TITLE SHEET, DRAWING INDEX, AND SITE LOCATION MAPS		A/S-203	0	TRUCK LOADING PLAN SECTIONS AND DETAILS
	T-202	0	ABBREVIATIONS, LEGEND, AND GENERAL NOTES		A/S-204	0	STRUCTURAL NOTES AND DETAILS
	C-201	0	GENERAL SITE AND STOCKPILE PLAN		A/S-205	0	STRUCTURAL STANDARD DETAILS
	C-202	0	CELL 1 FINAL GRADING PLAN		E-201	0	OVERALL ELECTRICAL SITE PLAN
	C-203	0	EVAPORATION POND(S) AREA FINAL GRADING PLAN		E-202	0	CREST PAD BUILDINGS ELECTRICAL POWER AND LIGHTING PLANS
	C-204	0	GRADING SECTIONS AND DETAILS		E-203	0	ELECTRICAL ONE-LINE DIAGRAMS AND MCC ELEVATIONS
	C-205	0	GRADING SECTIONS AND DETAILS		E-204	0	ELECTRICAL CONTROL DIAGRAMS
	H-201	0	CELL 1 GEOSYNTHETICS LINER SYSTEMS PLAN		IN-201	0	LANDFILL PROCESS AND INSTRUMENTATION DIAGRAM (P&ID)
	H-202	0	EVAPORATION PONDS GEOSYNTHETICS LINER SYSTEMS PLAN		IN-202	0	EVAP POND(S) PROCESS AND INSTRUMENTATION DIAGRAM (P&ID)
	H-203	0	LINER SYSTEMS SECTIONS AND DETAILS		IN-203	0	PICS BLOCK DIAGRAM
	H-204	0	LINER SYSTEMS SECTIONS AND DETAILS		IN-204	0	CREST PAD BLDGS. CONTROL PNL ELS.
	H-205	0	LINER SYSTEMS SECTIONS AND DETAILS		IN-205	0	TYPICAL WIRING DIAGRAMS
	H-206	0	EVAPORATION POND(S) LINER SYSTEMS SECTIONS AND DETAILS		EC-201	0	EROSION CONTROL PLAN
	P-201	0	LEACHATE PIPING PLAN		C-301	0	CELL 2 EXCAVATION PLAN
	P-202	0	CELL 1 LEAK DETECTION/LEACHATE COLLECTION SYS. PLAN		C-302	0	CELL 2 FINAL GRADING PLAN
	P-203	0	EVAP POND(S) LEAK DETECT./LEACHATE COLLECT. SYS. PLAN		C-303	0	CELL 2 SECTIONS AND DETAILS
	P-204	0	LEAK DETECT./LEACHATE COLLECT. SECTIONS AND DETAILS		C-304	0	CELL 1 AND 2 FINAL COVER PLAN
	P-205	0	LANDFILL CREST PAD BUILDING MECHANICAL PLAN		C-305	0	FINAL COVER SECTIONS AND DETAILS
	P-206	0	EVAP POND(S) CREST PAD BUILDING MECHANICAL PLAN		H-301	0	CELL 2 GEOSYNTHETICS LINER SYSTEM PLAN
	P-207	0	LEAK DETECT./LEACHATE COLLECT. SECTIONS AND DETAILS		P-301	0	CELL 2 LEACHATE COLLECTION PLAN
	P-208	0	PIPING DETAILS		P-302	0	CELL 2 LEACHATE COLLECTION SECTIONS AND DETAILS
	P-209	0	LEACHATE COLLECTION SYSTEM DETAILS				
	P-210	0	LEACHATE COLLECTION SYSTEM DETAILS				
	A/S-201	0	CREST PAD BUILDING PLAN AND ELEVATIONS				
	A/S-202	0	CREST PAD BUILDING SECTIONS AND DETAILS				

PROFESSIONAL ENGINEER REGISTERED 8721 STATE OF IDAHO JAY G. DEHNER
5/7/02

SUBCONTRACT NO.	S01-588058
REQUESTER:	
DESIGN:	J DEHNER
DRAWN:	R MORGAN
PROJECT NO.	
SPEC CODE	
FOR REVIEW/APPROVAL SIGNATURES SEE DAR NO.	DAR
EFFECTIVE DATE:	

INEEL Idaho National Engineering & Environmental Laboratory BECHTEL BWXT IDAHO, LLC

CH2MHILL MWH MONTGOMERY WATSON HARZA

INEEL CERCLA DISPOSAL FACILITY (ICDF)
TITLE SHEET, DRAWING INDEX, AND SITE LOCATION MAPS

SIZE	CAGE CODE	INDEX CODE NUMBER AREA	TYPE	CL	ORIG	DWG-	REV
D		B21	0100	02			0

SCALE: NONE CPP SHEET T-201

REVISIONS		
REV	DESCRIPTION	EFFECTIVE DATE:
0	APPROVED FOR CONSTRUCTION	14 MAY 2002

GENERAL NOTES

1. PROJECT COORDINATES ARE BASED ON NAD27 IDAHO EAST ZONE STATE PLANE, CORRECTED FOR ELEVATION AND GRID. VERTICAL DATUM IS NGVD29. TO CONVERT PROJECT COORDINATES TO STATE PLANE, DIVIDE PROJECT COORDINATES BY 1.00024057
2. SUBCONTRACTOR AND SUPPLIER PRIMARY ACCESS TO SITE VIA LINCOLN BLVD.
3. SUBCONTRACTOR PARKING AREA IS SHOWN ON DWG C-201. NO OVERNIGHT PARKING ALLOWED IN THIS AREA. EQUIPMENT PARKING AND SERVICING TO BE PERFORMED IN STAGING AREA SHOWN ON DWG C-201.
4. STAGE I CONSTRUCTION PERFORMED IN 2001 CONSTRUCTION SEASON. THIS STAGE II CONSTRUCTION DOCUMENTS ARE BASED ON STAGE I RECORD DRAWING OR CONSTRUCTION INFORMATION, WHERE AVAILABLE DURING DEVELOPMENT.
5. APPROXIMATE LOCATION OF PERMANENT STOCKPILE AT THE FOLLOWING CORNER COORDINATES:

NORTHING	EASTING
690400	295050
689900	295050
690400	294550
689900	294550

LEGEND

- ▲1538 SURVEY CONTROL POINT
- GS51 MONITORING WELL
- 4920 EXISTING GROUND CONTOUR
- 4920 FINISH GRADE CONTOUR
- EXISTING OVERHEAD POWER
- EXISTING FENCE
- NEW FENCE
- EXISTING BURIED SERVICE WASTE LINE
- EXISTING ROAD
- N 693,000 E 295,000 PROJECT COORDINATES SEE NOTE 1
- X LAYOUT CONTROL POINT
- EXISTING POWER POLE
- EXISTING POLE MOUNTED SIGN
- GRADE/SLOPE DIRECTION
- EXISTING DRAINAGE DITCH
- PREPARED SUBGRADE
- SOIL BENTONITE LINER OR BASE SOIL
- GEOCOMPOSITE
- GEOSYNTHETIC CLAY LINER
- GRAVEL
- OPERATIONS LAYER

PIPE AND FITTING SYMBOLS

- EXISTING PIPE (SCREENED)
- NEW PIPE
- EXISTING PIPE TO BE ABANDONED
- EXISTING PIPE TO BE REMOVED
- WELDED JOINT
- ELBOW UP
- ELBOW DOWN
- TEE UP
- TEE DOWN
- LATERAL UP
- LATERAL DOWN
- CONCENTRIC REDUCER
- ECCENTRIC REDUCER
- UNION
- BLIND FLANGE
- PLUG
- CAP
- ELBOW, 90 DEGREE
- CROSS
- TEE
- ELBOW, 45 DEGREE

HVAC SYMBOLS

- SUPPLY DUCT (SECTION)
- INTAKE, RETURN, OR EXHAUST DUCT (SECTION)
- THERMOSTAT
- (200) 200 SCFM

VALVE SYMBOLS

- GATE
- BALL
- SWING CHECK
- HOSE VALVE
- NON FREEZE HOSE VALVE X = NO. IN SPECS
- NON FREEZE HOSE VALVE WITH HOSE RACK X = NO. IN SPECS
- PRESSURE RELIEF
- AIR AND/OR VACUUM RELEASE (VARV)

SECTION AND DETAIL DESIGNATION

POINT AT WHICH SECTION OR DETAIL IS TAKEN

LETTER INDICATES DESIGNATION OF SECTION

C C-105

INDICATES DRAWING WHERE SECTION IS SHOWN

NUMBER INDICATES DESIGNATION OF DETAIL

2 —

INDICATES DRAWING WHERE DETAIL IS SHOWN, — INDICATES DETAIL IS SHOWN ON SAME DRAWING AS TAKEN, TYP.

POINT AT WHICH SECTION OR DETAIL IS SHOWN

LETTER INDICATES DESIGNATION OF SECTION

A C-105 SECTION NTS — NOT TO SCALE

INDICATES DRAWING WHERE SECTION IS TAKEN

NUMBER INDICATES DESIGNATION OF DETAIL

2 C-105 DETAIL 1"=5'-0" — SCALE

INDICATES DRAWING WHERE DETAIL IS TAKEN

STRUCTURAL ABBREVIATIONS

AB	ANCHOR BOLT	FD	FLOOR DRAIN	RC	REINFORCED CONCRETE
AHR	ANCHOR	FDN	FOUNDATION	REINF	REINFORCE
AL	ALUMINUM	FG	FINISHED GRADE	RST	REINFORCING STEEL
ALTN	ALTERNATE	FTG	FOOTING	SIM	SIMILAR
APVD	APPROVED	GALV	GALVANIZE (HOT DIP)	SPECS	SPECIFICATIONS
BOT	BOTTOM	GVL	GRAVEL	SQ	SQUARE
BF	BOTTOM FACE	HAS.	HEADED ANCHOR STUD	STD	STANDARD
BM	BEAM	HDR	HEADER	STIF	STIFFENER
BRG	BEARING	HORIZ	HORIZONTAL	STL	STEEL
C TO C	CENTER TO CENTER	I.F.	INSIDE FACE	STR	STRAIGHT
CJ	CONSTRUCTION JOINT	LNTL	LINTEL	STRUCT	STRUCTURES
CL	CENTER LINE	LONG.	LONGITUDINAL	SYMM	SYMMETRICAL
CLR	CLEARANCE	MAX	MAXIMUM	T&B	TOP AND BOTTOM
COL	COLUMN	MB	MACHINE BOLTS	TC	TOP OF CONCRETE
CONC	CONCRETE	MIN	MINIMUM	TF	TOP FACE
CONN	CONNECTION	NIC	NOT IN CONTRACT	THK	THICK
CONT	CONTINUOUS	NTS	NOT TO SCALE	TRANSV	TRANSVERSE
CTR	CENTER	OC	ON CENTER	TST	TOP OF STEEL
DBA	DEFORMED BAR ANCHOR	O.F.	OUTSIDE FACE	TW	TOP OF WALL
DIA	DIAMETER	O TO O	OUT TO OUT	TYP	TYPICAL
DIR	DIRECTION	OPNG	OPENING	VERT	VERTICAL
DWG	DRAWING	PJF	PREMOLDED JOINT FILLER	WS	WATERSTOP OR WATER SURFACE
EA	EACH	PLYWD	PLYWOOD	WWF	WELDED WIRE FABRIC
EF	EACH FACE	PRCST	PRECAST		
EL	ELEVATION	P	PILASTER		
EQL SP	EQUALLY SPACED				
EW	EACH WAY				
EXP JT	EXPANSION JOINT				
EXST	EXISTING				

ABBREVIATIONS

@	AT	MFR	MANUFACTURER
APPROX	APPROXIMATE	MIN	MINIMUM
BLVD	BOULEVARD	NO	NUMBER
CERCLA	COMPREHENSIVE ENVIRONMENTAL RESPONSE COMPENSATION AND LIABILITY ACT	NTS	NOT TO SCALE
CMP	CORRUGATED METAL PIPE	O.C.	ON CENTER
CSA	CONTAMINANT STORAGE AREA	PC	POINT OF CURVATURE
DBL	DOUBLE	PLDRS	PRIMARY LEACHATE DETECTION RECOVERY SYSTEM
DWG	DRAWING	PT	POINT OF TANGENCY
ELEV	ELEVATION	R	RADIUS
EXIST	EXISTING	REF	REFERENCE
FT	FOOT/FEET	RD	ROAD
GCL	GEOSYNTHETIC CLAY LINER	S.F.	SQUARE FOOT/FEET
HDPE	HIGH DENSITY POLYETHYLENE	SLDRS	SECONDARY LEACHATE DETECTION RECOVERY SYSTEM
I.E.	INVERT ELEVATION	SSSTF	STAGING, STORAGE, SIZING, AND TREATMENT FACILITY
ICDF	INEEL CERCLA DISPOSAL FACILITY	TEMP	TEMPORARY
LCS	LEACHATE COLLECTION SYSTEM	THK	THICK/THICKNESS
LDS	LEACHATE DETECTION SYSTEM	TYP	TYPICAL
LCRS	LEACHATE COLLECTION RECOVERY SYSTEM	VARV	VACUUM AIR RELEASE VALVE
LDRS	LEACHATE DETECTION RECOVERY SYSTEM		

SURVEY CONTROL TABLE

WELL NO./ SURVEY CONTROL POINT	PROJECT NORTHING	PROJECT EASTING	NGVD29 ELEV	DESCRIPTION
GS51	692,503.870	296,413.440	4918.74	USGS 51 WELL BRASS CAP
GS57	691,919.716	294,942.147	4922.50	USGS 57 WELL BRASS CAP
GS123	692,687.214	295,850.627	4919.22	USGS 123 WELL BRASS CAP
SP10	692,376.984	296,278.547	4917.89	SWPP 10 WELL BRASS CAP
SPW1	692,431.900	296,303.240	4917.84	PW1 WELL BRASS CAP
SPW6	692,863.690	295,222.085	4920.59	PW6 WELL BRASS CAP
SNEA	692,976.235	294,598.713	4922.12	SNEAK REBAR W/YELLOW CAP
1526	692,917.904	294,853.695	4921.63	SPT-1 BRASS CAP
1530	692,888.161	295,389.972	4919.28	CHEMB-1 BRASS CAP
1538	692,127.506	295,277.940	4920.93	CHEMB-2 BRASS CAP
1542	691,235.020	294,947.685	4923.10	CHEMB-3 BRASS CAP
1546	691,774.790	295,190.788	4921.91	SPT-3 BRASS CAP
1550	691,441.621	295,281.496	4922.06	GSB-2 BRASS CAP
1554	691,209.551	295,369.285	4922.68	SPT-5 BRASS CAP
1558	691,455.055	294,816.564	4923.17	SPT-4 BRASS CAP

PROFESSIONAL ENGINEER REGISTERED STATE OF IDAHO JAY G. DEHNER 5/7/02

INEEL Idaho National Engineering & Environmental Laboratory BECHTEL BWXT IDAHO, LLC

CH2MHILL MWH MONTGOMERY WATSON HARZA

INEEL CERCLA DISPOSAL FACILITY (ICDF)
ABBREVIATIONS, LEGEND
AND GENERAL NOTES

SUBCONTRACT NO.	S01-588058
REQUESTER:	
DESIGN:	J DEHNER
DRAWN:	R MORGAN
PROJECT NO.	
SPEC CODE	
FOR REVIEW/APPROVAL SIGNATURES SEE DAR NO.	DAR
EFFECTIVE DATE:	

SIZE D | CAGE CODE | INDEX CODE NUMBER: AREA B21 | TYPE 0100 | CL 01 | ORG | DWG- | REV 0

SCALE: NONE | CPP | SHEET T-202

FMT-01-REV 3.3

REVISIONS		
REV	DESCRIPTION	EFFECTIVE DATE:
0	APPROVED FOR CONSTRUCTION	14 MAY 2002

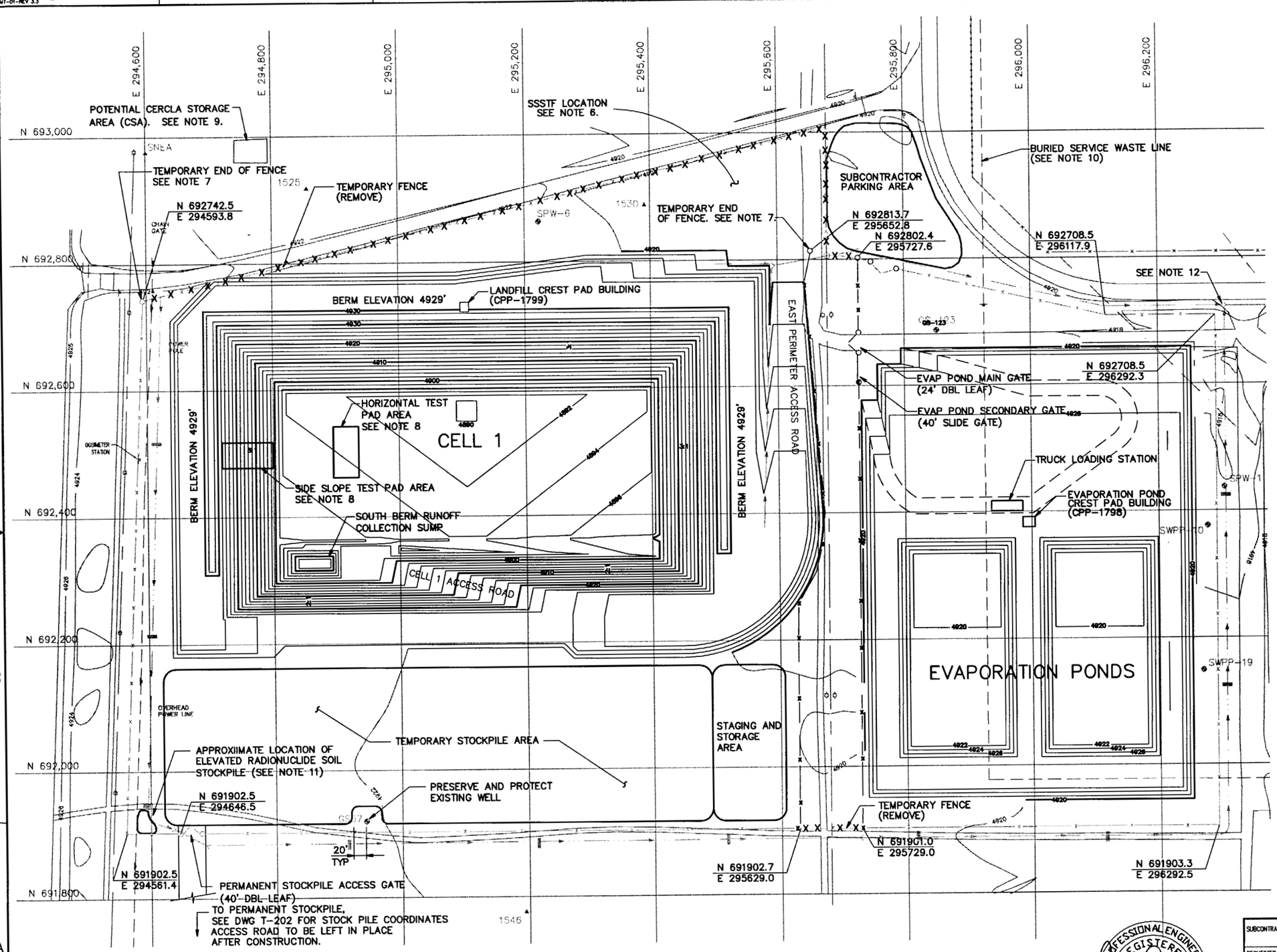

NOTES:

1. GRADES SHOWN FOR CELL 1 AND EVAPORATION PONDS ARE TOP OF FINAL GRADES. SEE C-202 AND C-203 FOR FINAL GRADING PLANS FOR THESE FACILITIES.
2. TEMPORARY STOCKPILE AREA FOR STORAGE AND PROCESSING OF EXCAVATION MATERIAL FOR OPERATIONS LAYER, LCRS DRAIN GRAVEL, AND GRAVEL SURFACING MATERIALS.
3. PERMANENT STOCKPILE AREA LOCATION IS WITHIN APPROXIMATE AOC BOUNDARY. SEE T-202 FOR COORDINATES.
4. EXCAVATED MATERIAL FROM CELL 1 NOT USED IN CONSTRUCTION TO BE PLACED IN PERMANENT STOCKPILE AREA.
5. SEE DRAWING T-202 FOR WELL AND SURVEY CONTROL POINT TABLE.
6. LOCATION OF SSSTF TO BE FINALIZED AND COORDINATED WITH ICDF, BASED ON LOCATION OF ICDF CELL AND FINAL COVER AS DEVELOPED IN THE DESIGN.
7. FENCE TO BE EXTENDED AROUND PERIMETER OF SSSTF BY OTHERS, ONCE SSSTF LOCATION IS FINALIZED.
8. FINAL LOCATION OF HORIZONTAL AND SIDE SLOPE SOIL BENTONITE LINER TEST PAD TO BE FIELD DETERMINED DURING CONSTRUCTION TO AVOID INTERFERENCE WITH ONGOING CONSTRUCTION ACTIVITIES.
9. POTENTIAL CSA TO BE FIELD LOCATED DURING CONSTRUCTION.
10. BURIED SERVICE WASTE LINE ABANDONED IN PLACE AND PLUGGED BY OTHERS.
11. SEE WASTE MANAGEMENT PLAN FOR DESCRIPTION OF SOIL IN THIS STOCK PILE.
12. DISCHARGE OF CLEAN STORMWATER WILL OCCUR TO EXISTING DISCHARGE CHANNELS VIA A LEVEL SPREADER AT THE NORTHEAST PART OF THE SITE.

PROFESSIONAL ENGINEER REGISTERED STATE OF IDAHO JAY G. DEHNER
5/7/02

SUBCONTRACT NO.	S01-588058
REQUESTER:	
DESIGN:	J DEHNER
DRAWN:	R MORGAN
PROJECT NO.	
SPEC CODE	
FOR REVIEW/APPROVAL SIGNATURES SEE DAR NO.	DAR
EFFECTIVE DATE:	

INEEL Idaho National Engineering & Environmental Laboratory BECHTEL BWXT IDAHO, LLC

CH2MHILL MWH MONTGOMERY WATSON HARZA

INEEL CERCLA DISPOSAL FACILITY (ICDF)

GENERAL SITE AND STOCKPILE PLAN

SIZE	CAGE CODE	INDEX CODE NUMBER AREA	TYPE	CL	ORIG	DWG-	REV
D		B21	D100	02			0

SCALE: AS SHOWN CPP SHEET C-201

REVISIONS		
REV	DESCRIPTION	EFFECTIVE DATE:
0	APPROVED FOR CONSTRUCTION	14 MAY 2002

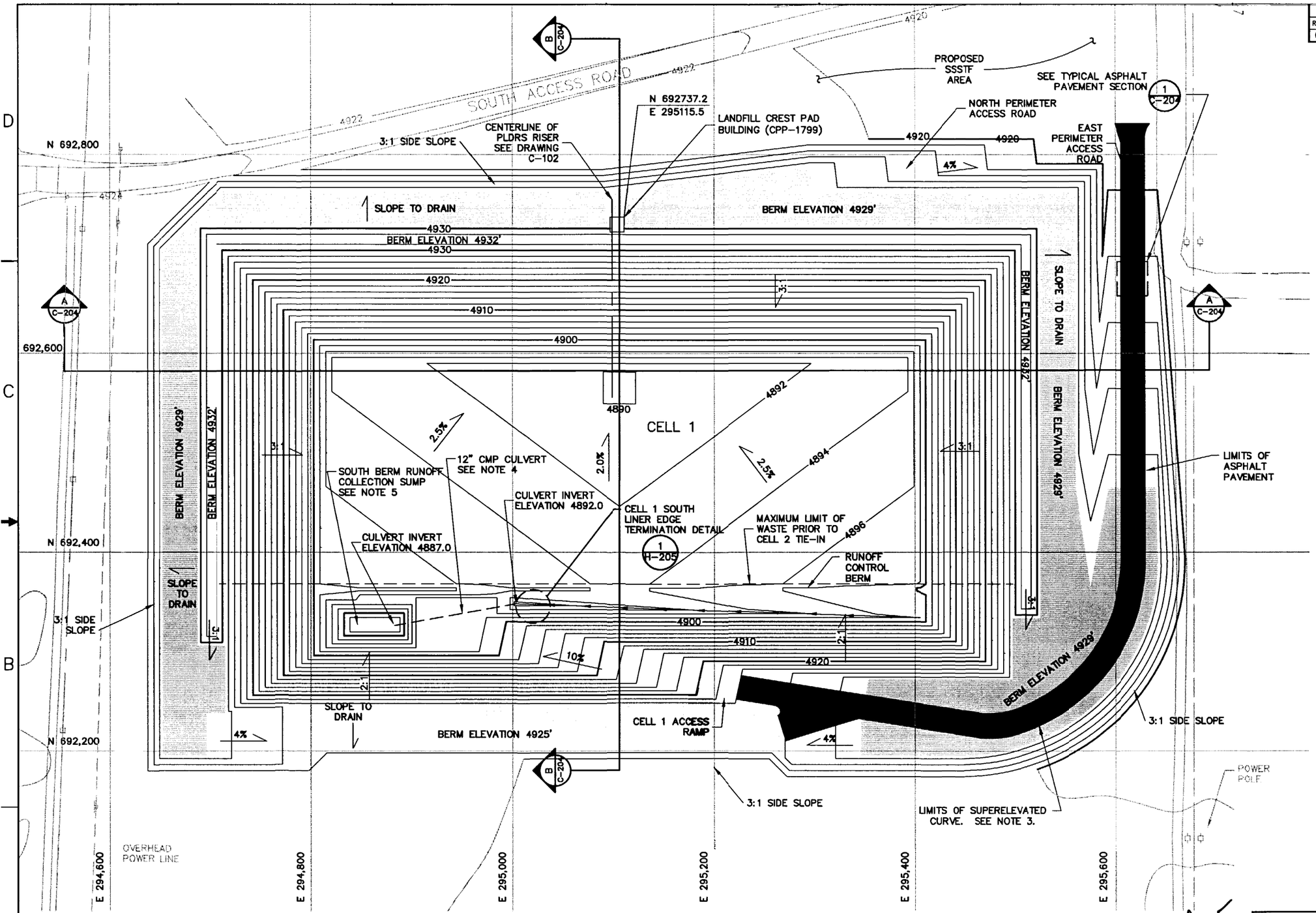

NOTES:

1. FINAL GRADES SHOWN REPRESENT TOP OF THE OPERATIONS LAYER AND TOP OF BERM GRAVEL SURFACE.
2. SLOPE TO DRAIN AREAS SHALL BE A MINIMUM OF 1%.
3. GRADES FOR SUPERELEVATED CURVE TO BE DETERMINED IN THE FIELD.
4. CULVERT SHALL BE 14-GAGE MINIMUM GALVANIZED OR ALUMINIZED CORRUGATED METAL PIPE WITH STANDARD CONNECTION BAND AT ALL JOINTS. LOCATION OF THE BURIED RUNOFF PIPE SHALL BE FIELD VERIFIED.
5. SUMP DIMENSIONS SHALL BE FIELD VERIFIED. PROVIDE MINIMUM BOTTOM SURFACE AREA OF 750 SQUARE FEET. CARE SHALL BE USED WHEN EXCAVATING THE SUMP TO AVOID DAMAGING THE SOUTH EDGE OF THE LINER SYSTEM.
6. AS-BUILT GRADES ARE NOT SHOWN ON THIS PLAN, REFER TO RECORD DRAWINGS FOR PHASE 1 CONSTRUCTION FOR AS-BUILT SUBGRADE FOR THIS FACILITY.

LEGEND:

- LIMITS OF SUPERELEVATED ACCESS ROAD SECTION
- LIMITS OF TYPICAL ASPHALT PAVEMENT SECTION
- LIMITS OF TOP OF BERM

N

SCALE

50' 0 50' 100'

CONTOUR INTERVAL 2FT.

PROFESSIONAL ENGINEER REGISTERED STATE OF IDAHO PHILLIP E. CROUSE 5-3-02

INEEL Idaho National Engineering & Environmental Laboratory BECHTEL BWXT IDAHO, LLC

CH2MHILL MWH MONTGOMERY WATSON HARZA

INEEL CERCLA DISPOSAL FACILITY (ICDF)

CELL 1
FINAL GRADING PLAN

SUBCONTRACT NO.	S01-588058
REQUESTER:	
DESIGN:	PHILLIP CROUSE
DRAWN:	NICOLE GONZALEZ
PROJECT NO.	
SPEC CODE	
FOR REVIEW/APPROVAL SIGNATURES SEE DAR NO.	DAR
EFFECTIVE DATE:	

SIZE	CAGE CODE	INDEX CODE NUMBER (AREA / TYPE / CL / ORIG)	DWG-	REV
D		B21 / 0100 / 02		0
SCALE: AS SHOWN			CPP SHEET C-202	

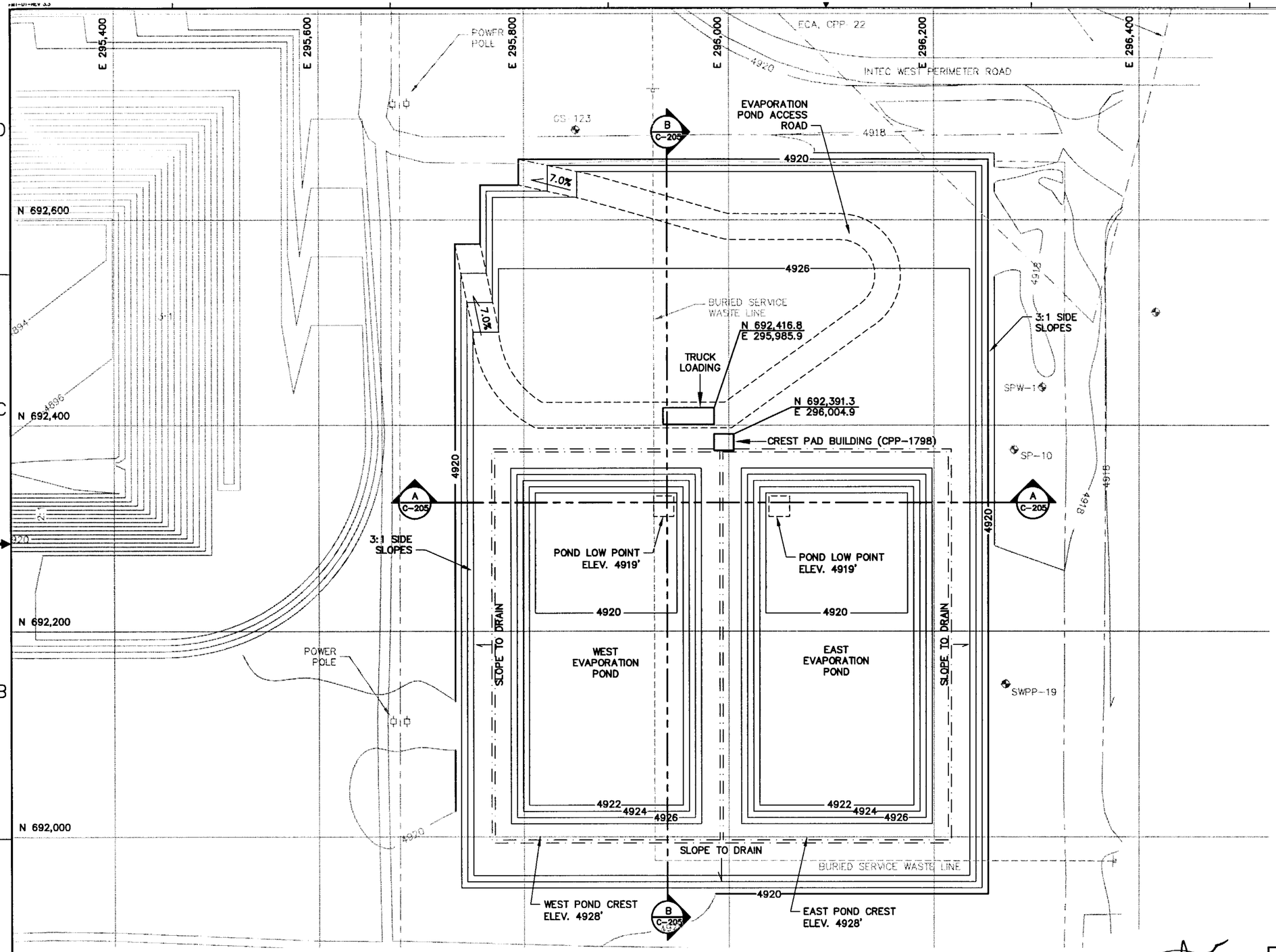

REVISIONS		
REV	DESCRIPTION	EFFECTIVE DATE:
0	APPROVED FOR CONSTRUCTION	14 MAY 2002

NOTES:

1. FINAL GRADES SHOWN REPRESENT TOP OF THE ACCESS ROAD GRADE FOR PADS AND ROAD AREAS; TOP OF UPPER SACRIFICIAL GEOMEMBRANE FOR PONDS. SEE THE PHASE 1 AS-BUILT CONSTRUCTION RECORD DRAWING FOR AS-BUILT GRADES OF SUBGRADE SURFACE.
2. SLOPE TO DRAIN AREAS SHALL BE A MINIMUM OF 1%.
3. AS-BUILT GRADES ARE NOT SHOWN ON THIS PLAN, REFER TO RECORD DRAWINGS FOR PHASE 1 CONSTRUCTION FOR AS-BUILT SUBGRADE ELEVATIONS FOR THIS FACILITY.

N

SCALE
50' 0 50' 100'
CONTOUR INTERVAL 2FT.

PROFESSIONAL ENGINEER REGISTERED 9147 STATE OF IDAHO PHILLIP E. CROUSE

SUBCONTRACT NO.	S01-588058
REQUESTER:	
DESIGN:	PHILLIP CROUSE
DRAWN:	MATT MATHISEN
PROJECT NO.	
SPEC CODE	
FOR REVIEW/APPROVAL SIGNATURES SEE DAR NO.	DAR
EFFECTIVE DATE:	

INEEL Idaho National Engineering & Environmental Laboratory BECHTEL BWXT IDAHO, LLC

CH2MHILL MWH MONTGOMERY WATSON HARZA

INEEL CERCLA DISPOSAL FACILITY (ICDF)

EVAPORATION POND(S) AREA
FINAL GRADING PLAN

SIZE	CAGE CODE	INDEX CODE NUMBER AREA	TYPE	CL	ORIG	DWG-	REV
D		B21	0100	02			0

SCALE: AS SHOWN CPP SHEET C-203

REVISIONS		
REV	DESCRIPTION	EFFECTIVE DATE:
0	APPROVED FOR CONSTRUCTION	14 MAY 2002

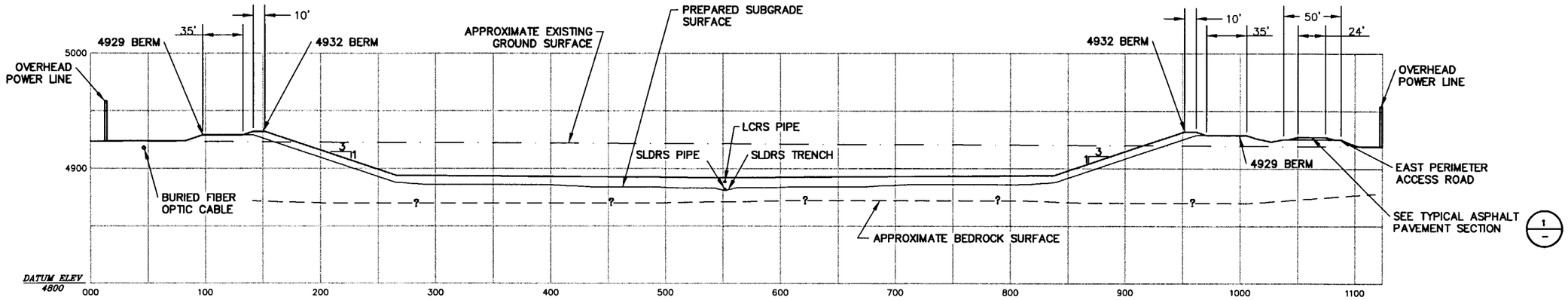

A C-202 EAST-WEST LANDFILL CROSS-SECTION

SCALE 50' 0 50' 100'

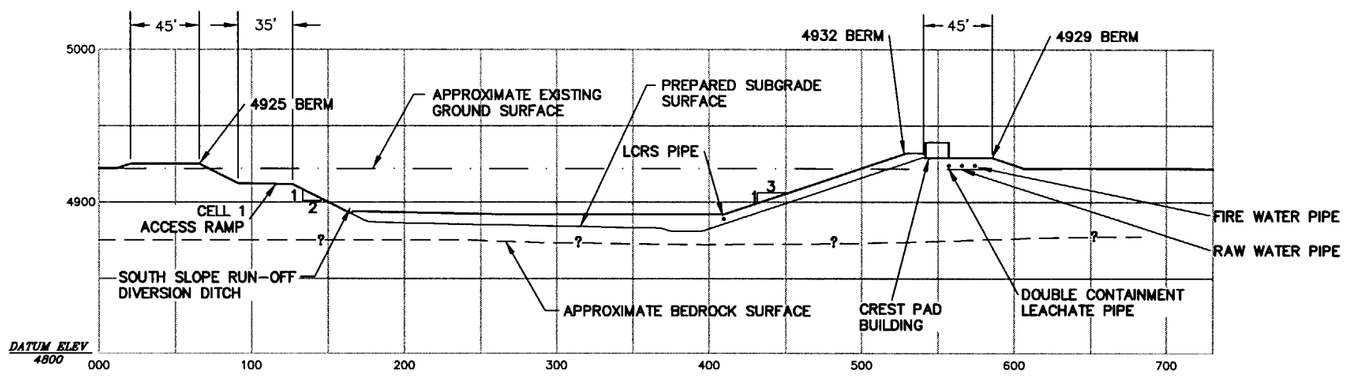

B C-202 SOUTH-NORTH LANDFILL CROSS-SECTION

SCALE 50' 0 50' 100'

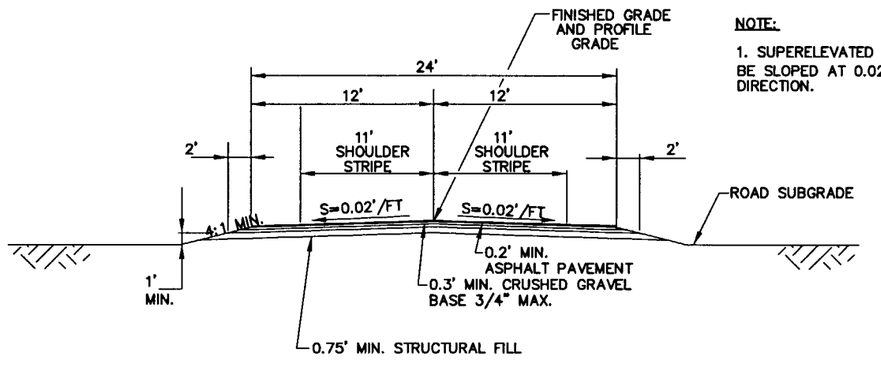

NOTE:

1. SUPERELEVATED CURVES SHALL BE SLOPED AT 0.02'/FT IN ONE DIRECTION.

1 C-202 TYPICAL ASPHALT PAVEMENT SECTION

NTS

PROFESSIONAL ENGINEER REGISTERED STATE OF IDAHO PHILLIP E. CROUSE 8244

SUBCONTRACT NO.	S01-588058
REQUESTER:	
DESIGN:	PHILLIP CROUSE
DRAWN:	NICOLE GONZALEZ
PROJECT NO.	
SPEC CODE	
FOR REVIEW/APPROVAL SIGNATURES SEE DAR NO.	DAR
EFFECTIVE DATE:	

INEEL Idaho National Engineering & Environmental Laboratory BECHTEL BWXT IDAHO, LLC

CH2MHILL MWH MONTGOMERY WATSON HARZA

INEEL CERCLA DISPOSAL FACILITY (ICDF)

GRADING SECTIONS AND DETAILS

SIZE	CAGE CODE	INDEX CODE NUMBER AREA	TYPE	CL	ORG	DWG-	REV
D		B21	0100	02			0

SCALE: AS SHOWN CPP SHEET C-204

PAGE:

REVISIONS		
REV	DESCRIPTION	EFFECTIVE DATE:
0	APPROVED FOR CONSTRUCTION	14 MAY 2002

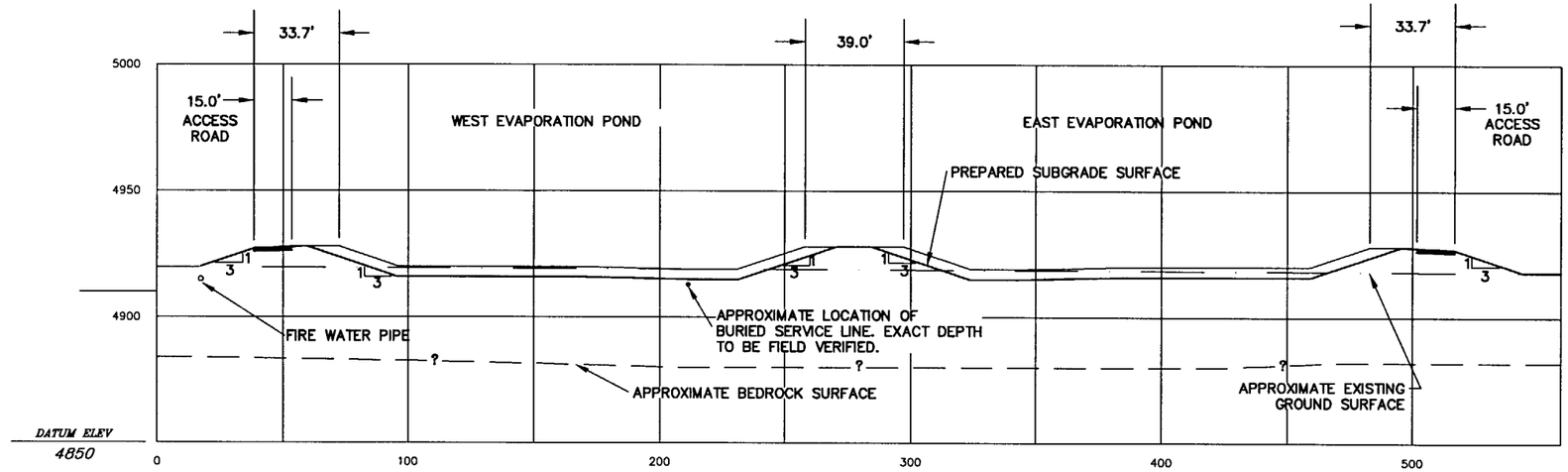

A C-203 EAST AND WEST EVAPORATION PONDS CROSS-SECTION
EAST – WEST CROSS-SECTION

SCALE 30' 0 30' 60'

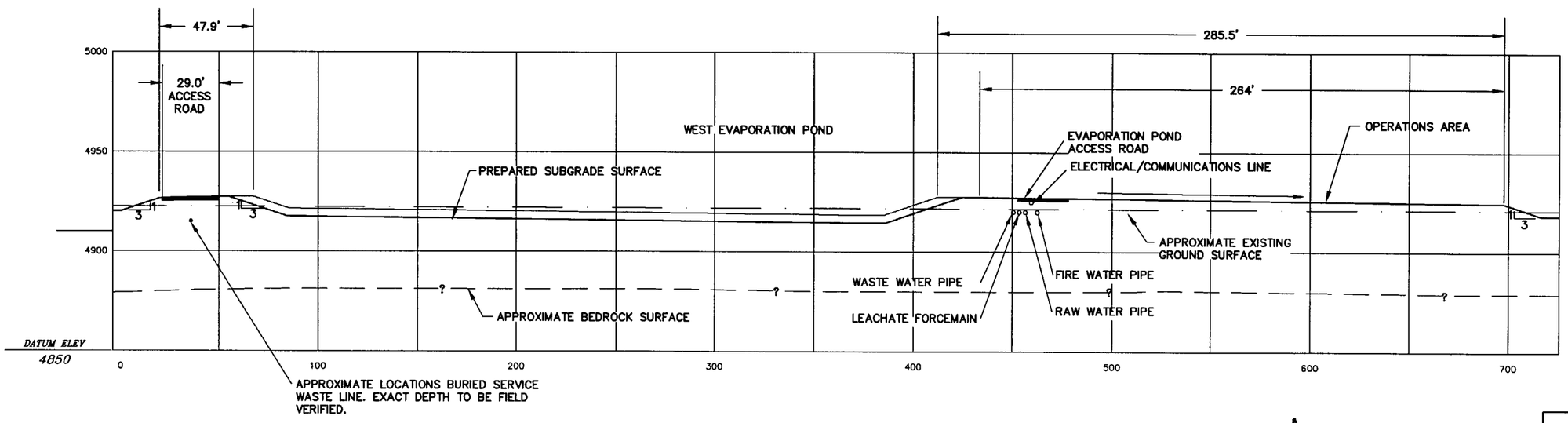

B C-203 WEST EVAPORATION POND CROSS-SECTION
NORTH–SOUTH CROSS-SECTION

SCALE 30' 0 30' 60'

PROFESSIONAL ENGINEER REGISTERED 9144 STATE OF IDAHO PHILLIP E. CROUSE

SUBCONTRACT NO.	S01-588058
REQUESTER:	
DESIGN:	PHILLIP CROUSE
DRAWN:	NICOLE GONZALEZ
PROJECT NO.	
SPEC CODE	
FOR REVIEW/APPROVAL SIGNATURES SEE DAR NO.	DAR
EFFECTIVE DATE:	

INEEL Idaho National Engineering & Environmental Laboratory BECHTEL BWXT IDAHO, LLC

CH2MHILL MWH MONTGOMERY WATSON HARZA

INEEL CERCLA DISPOSAL FACILITY (ICDF)

GRADING SECTIONS AND DETAILS

SIZE	CAGE CODE	INDEX CODE NUMBER AREA	TYPE	CI	ORIG	DWG-	REV
D		B21	0100	02			0

SCALE: AS SHOWN CPP SHEET C-205

REVISIONS		
REV	DESCRIPTION	EFFECTIVE DATE:
0	APPROVED FOR CONSTRUCTION	14 MAY 2002

NOTES:

1. GRADES SHOWN ARE TO TOP OF PRIMARY GEOMEMBRANE.
2. SLOPE TO DRAIN AREAS SHALL BE A MINIMUM OF 1%.
3. TRANSITION SLDRS DETAIL (1/H-203) TO DETAIL (2/H-204) AT THIS LOCATION.

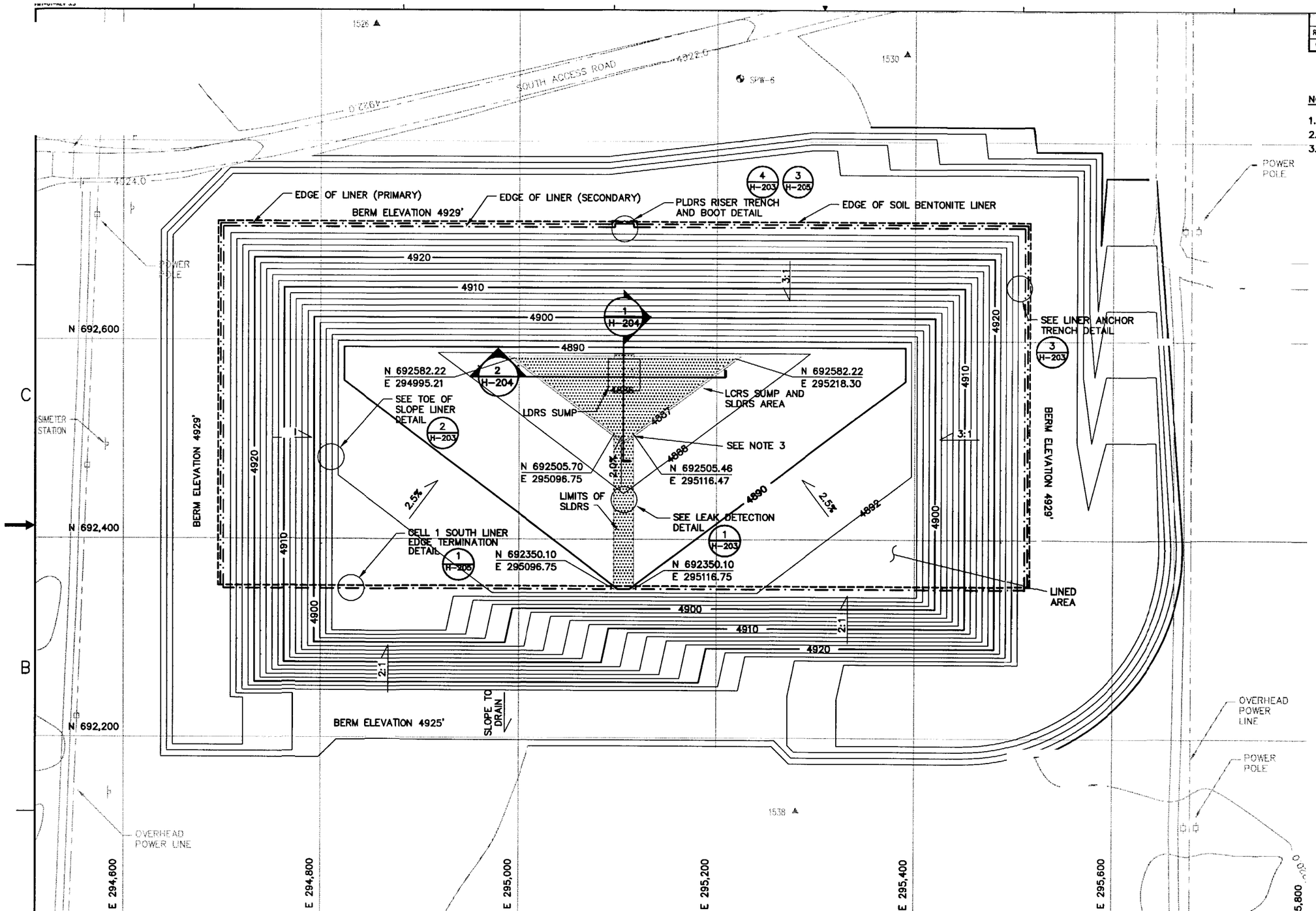

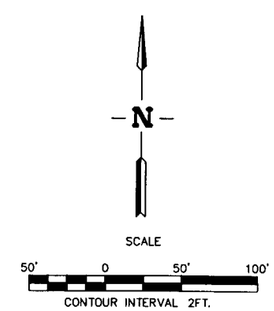

SUBCONTRACT NO.	S01-588058
REQUESTER:	
DESIGN:	PHILLIP CROUSE
DRAWN:	MATT MATHISEN
PROJECT NO.	
SPEC CODE	
FOR REVIEW/APPROVAL SIGNATURES SEE DAR NO.	DAR
EFFECTIVE DATE:	

PROFESSIONAL ENGINEER REGISTERED 9144 STATE OF IDAHO PHILLIP E. CROUSE

INEEL (Idaho National Engineering & Environmental Laboratory) BECHTEL BWXT IDAHO, LLC

CH2MHILL MWH MONTGOMERY WATSON HARZA

INEEL CERCLA DISPOSAL FACILITY (ICDF)

CELL 1 GEOSYNTHETICS LINER SYSTEMS PLAN

SIZE	CAGE CODE	INDEX CODE NUMBER					REV
		AREA	TYPE	CL	ORG	DWG-	
D		B21	0500	02			0

SCALE: AS SHOWN CPP SHEET H-201

REVISIONS		
REV	DESCRIPTION	EFFECTIVE DATE:
0	APPROVED FOR CONSTRUCTION	14 MAY 2002

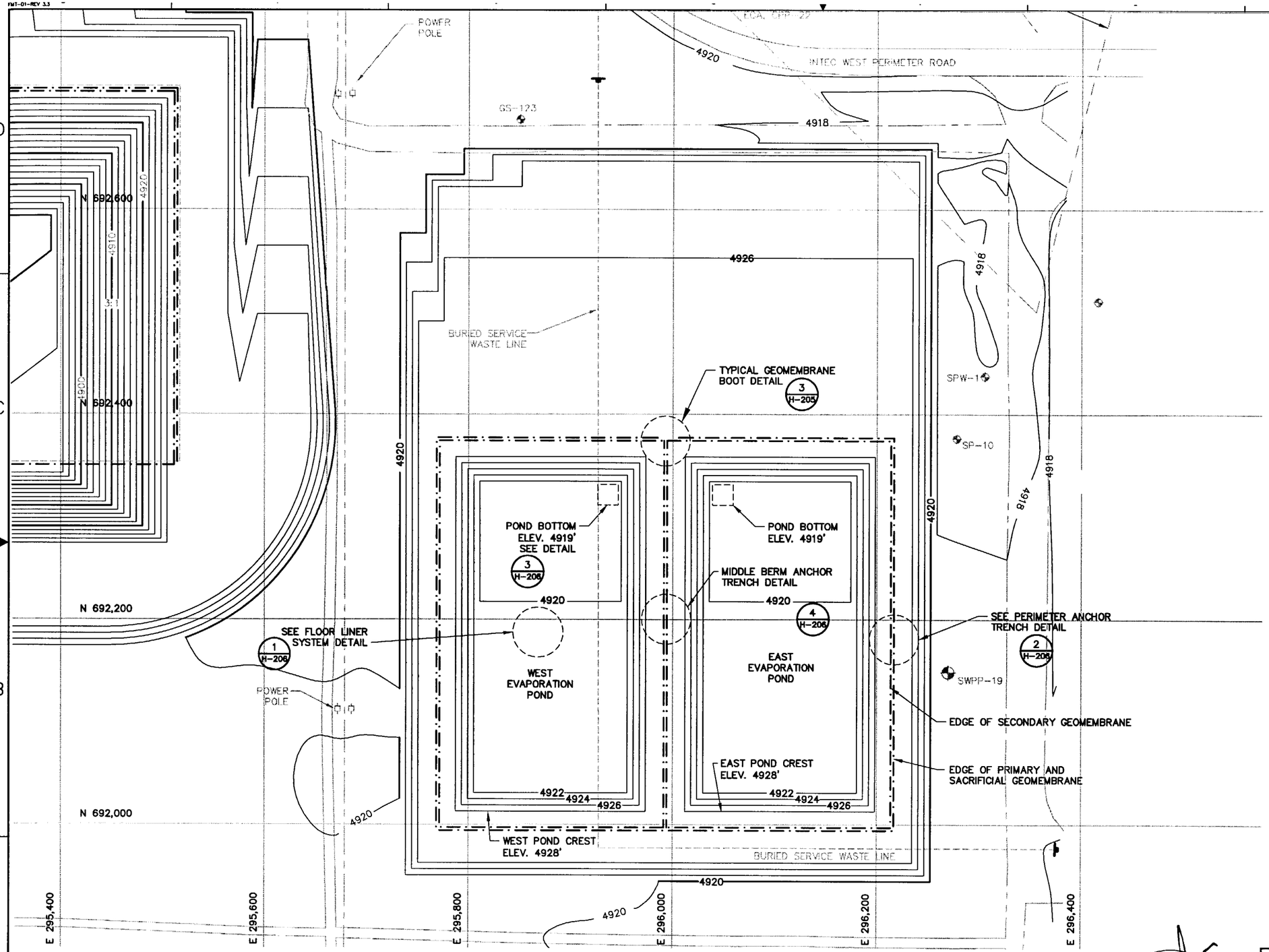

NOTES:

1. GRADES SHOWN ARE TOP OF UPPER (SACRIFICIAL) GEMOMEMBRANE.

N

SCALE

50' 0 50' 100'

CONTOUR INTERVAL 2FT.

PROFESSIONAL ENGINEER REGISTERED 9144 STATE OF IDAHO PHILLIP E. CROUSE 5-17-02

SUBCONTRACT NO.	S01-588058
REQUESTER:	
DESIGN:	PHILLIP CROUSE
DRAWN:	MATT MATHISEN
PROJECT NO.	
SPEC CODE	
FOR REVIEW/APPROVAL SIGNATURES SEE DAR NO.	DAR
EFFECTIVE DATE:	

INEEL Idaho National Engineering & Environmental Laboratory BECHTEL BWXT IDAHO, LLC

CH2MHILL MWH MONTGOMERY WATSON HARZA

INEEL CERCLA DISPOSAL FACILITY (ICDF)

EVAPORATION POND GEOSYNTHETICS LINER SYSTEMS PLAN

SIZE	CAGE CODE	INDEX CODE NUMBER AREA	TYPE	CI	ORG	DWG-	REV
D		B21	0500	02			0

SCALE: AS SHOWN CPP SHEET H-202

REVISIONS		
REV	DESCRIPTION	EFFECTIVE DATE:
0	APPROVED FOR CONSTRUCTION	14 MAY 2002

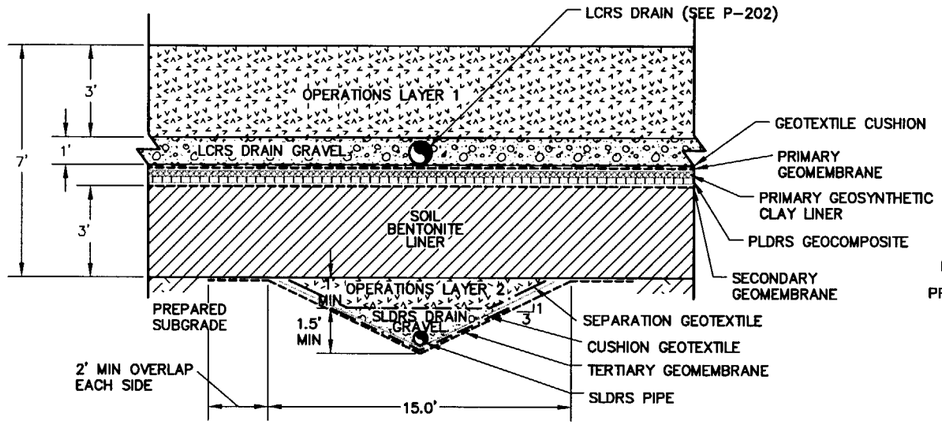

1 H-201 LEAK DETECTION DETAIL
NTS

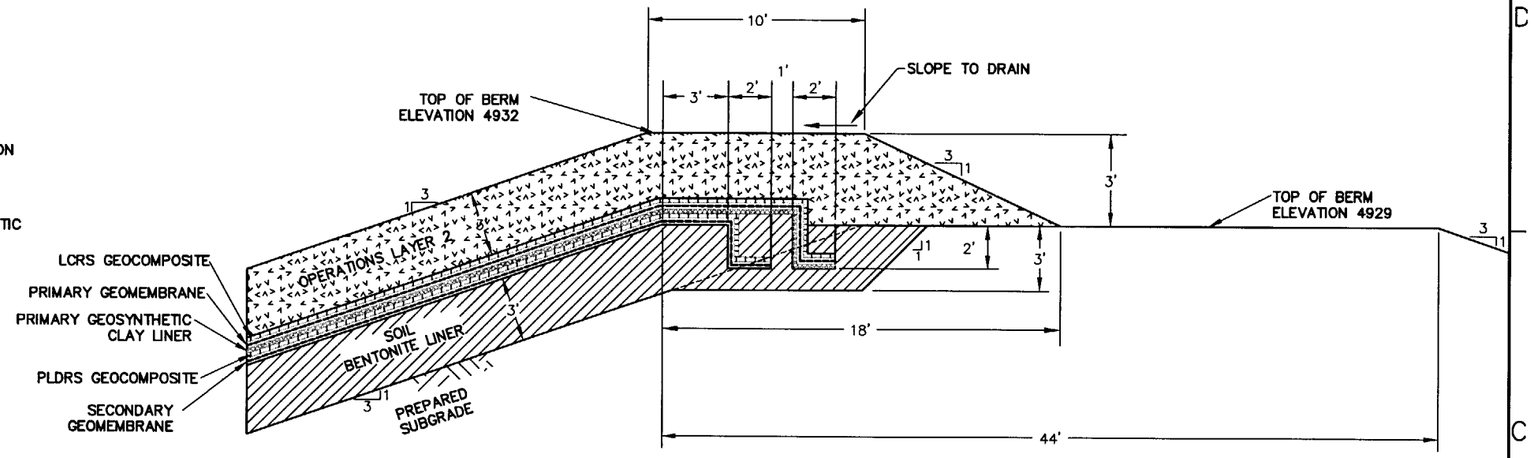

3 H-201 LINER ANCHOR TRENCH DETAIL
NTS

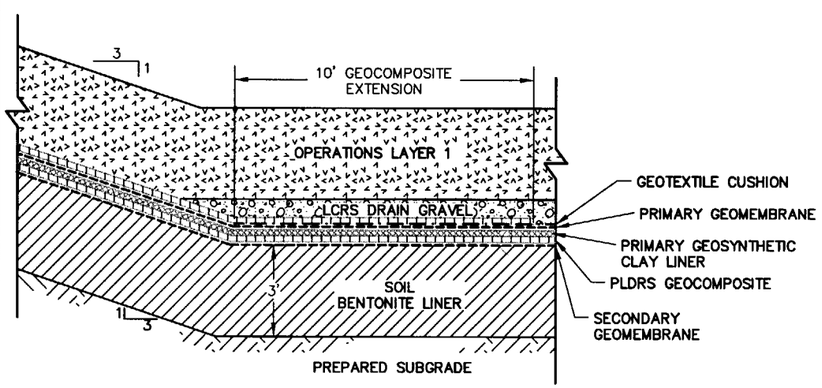

2 H-201 TOE OF SLOPE LINER DETAIL
NTS

NOTE: GEOTEXTILE CUSHION ENDS AT TOE OF SLOPE

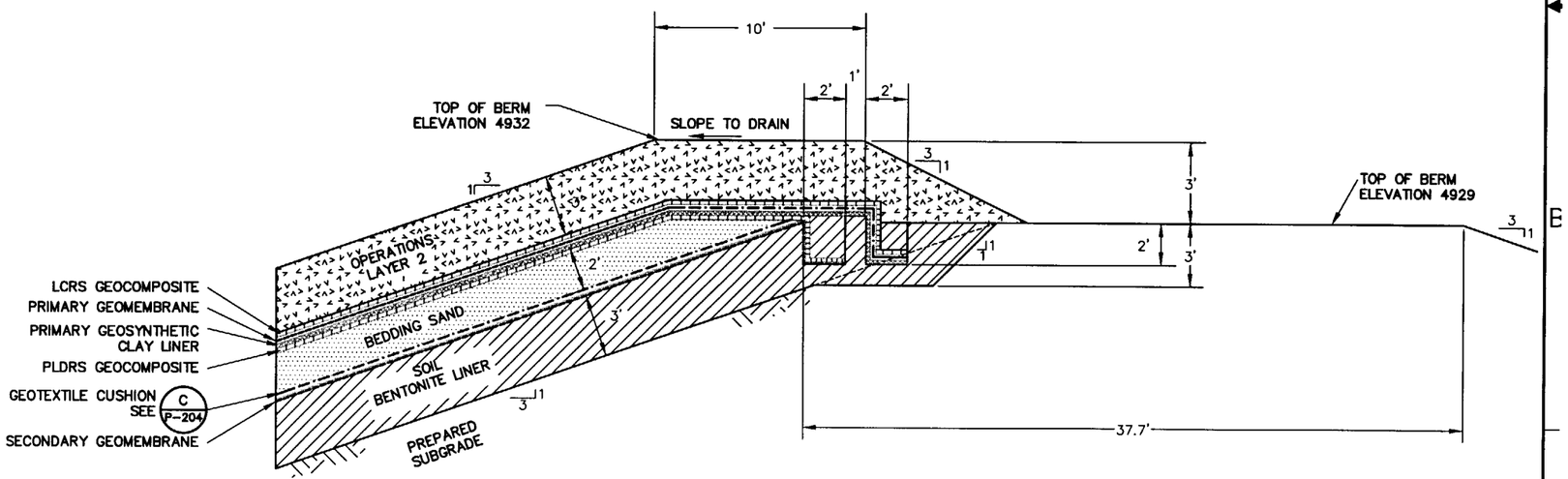

4 H-201 PLDRS RISER TRENCH DETAIL
NTS

NOTE:

RISER PIPE NOT SHOWN. SEE 3 H-205 FOR GEOMEMBRANE BOOT AT PIPE PENETRATION.

PROFESSIONAL ENGINEER REGISTERED 9147 STATE OF IDAHO PHILLIP E. CROUSE

SUBCONTRACT NO.	S01-588058
REQUESTER:	
DESIGN:	PHILLIP CROUSE
DRAWN:	MATT MATHISEN
PROJECT NO.	
SPEC CODE	
FOR REVIEW/APPROVAL SIGNATURES SEE DAR NO.	DAR
EFFECTIVE DATE:	

INEEL Idaho National Engineering & Environmental Laboratory BECHTEL BWXT IDAHO, LLC

CH2MHILL MWH MONTGOMERY WATSON HARZA

INEEL CERCLA DISPOSAL FACILITY (ICDF)

LINER SYSTEMS
SECTIONS AND DETAILS

SIZE	CAGE CODE	INDEX CODE NUMBER AREA	TYPE	Q	ORIG		REV
D		B21	0100	02		DWG-	0
SCALE: AS SHOWN						CPP SHEET H-203	

REVISIONS		
REV	DESCRIPTION	EFFECTIVE DATE:
0	APPROVED FOR CONSTRUCTION	14 MAY 2002

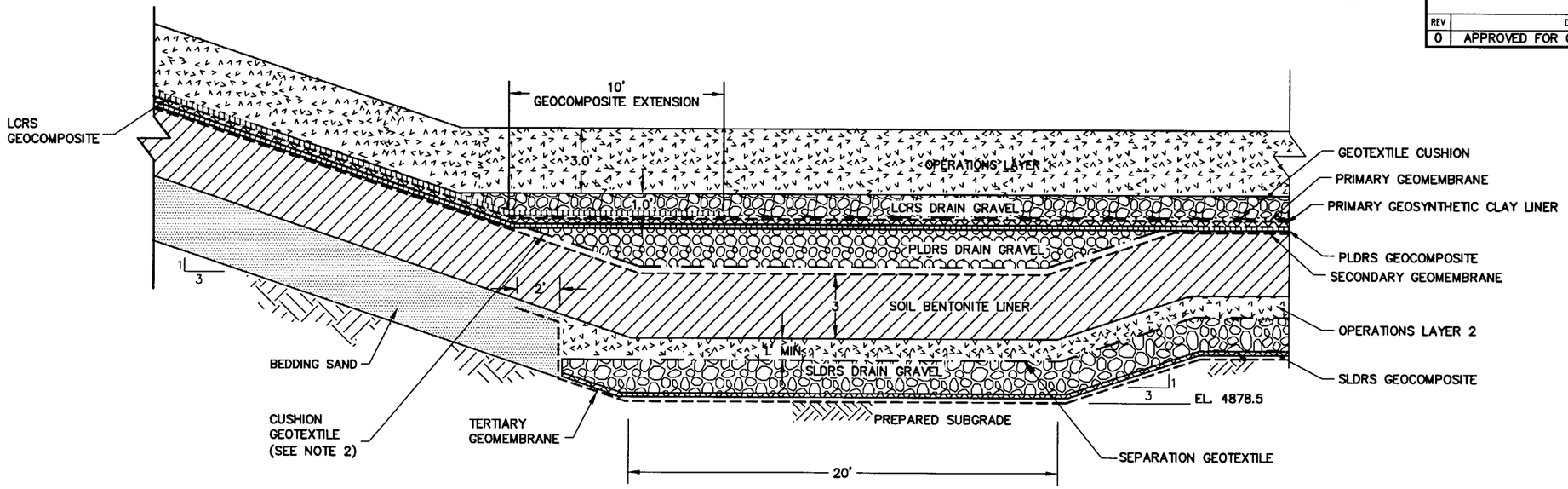

1 H-201 ICDF SUMP DETAIL NORTH – SOUTH CROSS-SECTION

NTS

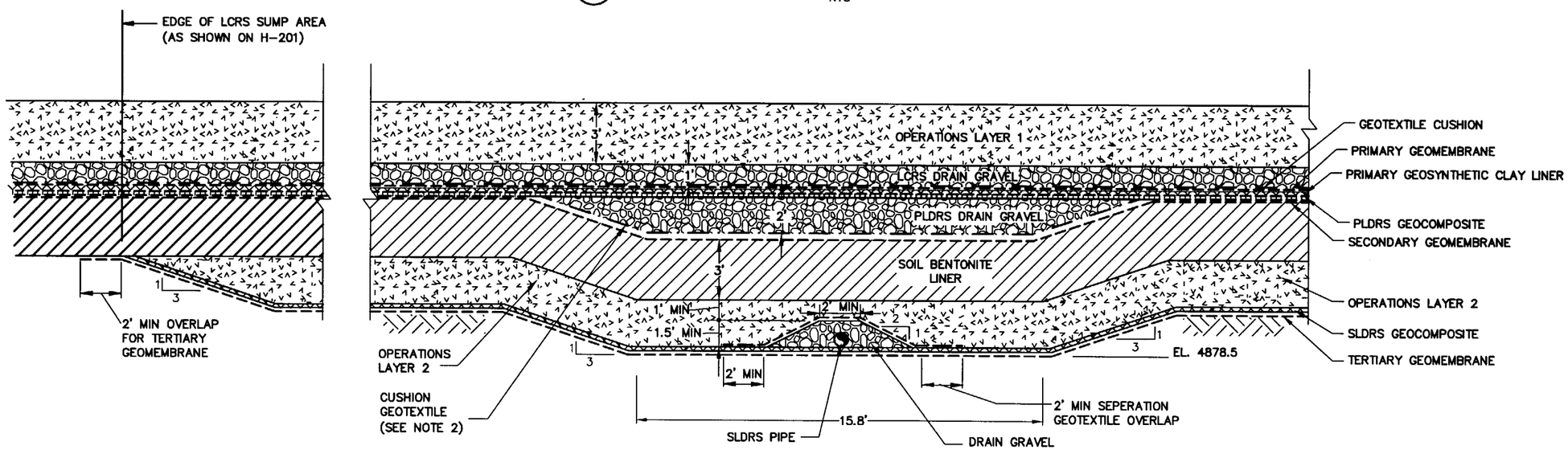

2 H-201 ICDF SUMP DETAIL EAST – WEST CROSS-SECTION

NTS

NOTES:

1. COLLECTION AND RISER PIPES NOT SHOWN FOR CLARITY.
2. EXTEND CUSHION GEOTEXTILE MINIMUM 2'-0" ON EITHER SIDE OF SUMP.

PROFESSIONAL ENGINEER REGISTERED 9144 STATE OF IDAHO PHILLIP E. CROUSE 5-7-02

SUBCONTRACT NO.	S01-588058
REQUESTER:	
DESIGN:	PHILLIP CROUSE
DRAWN:	JULIE GATES
PROJECT NO.	
SPEC CODE	
FOR REVIEW/APPROVAL SIGNATURES SEE DAR NO.	DAR
EFFECTIVE DATE:	

INEEL Idaho National Engineering & Environmental Laboratory BECHTEL BWXT IDAHO, LLC

CH2MHILL MWH MONTGOMERY WATSON HARZA

INEEL CERCLA DISPOSAL FACILITY (ICDF)

LINER SYSTEMS SECTIONS AND DETAILS

SIZE	CAGE CODE	INDEX CODE NUMBER AREA	TYPE	G	ORIG	DWG-	REV
D		B21	0500	02			0

SCALE: AS SHOWN CPP SHEET H-204

REVISIONS		
REV	DESCRIPTION	EFFECTIVE DATE:
0	APPROVED FOR CONSTRUCTION	14 MAY 2002

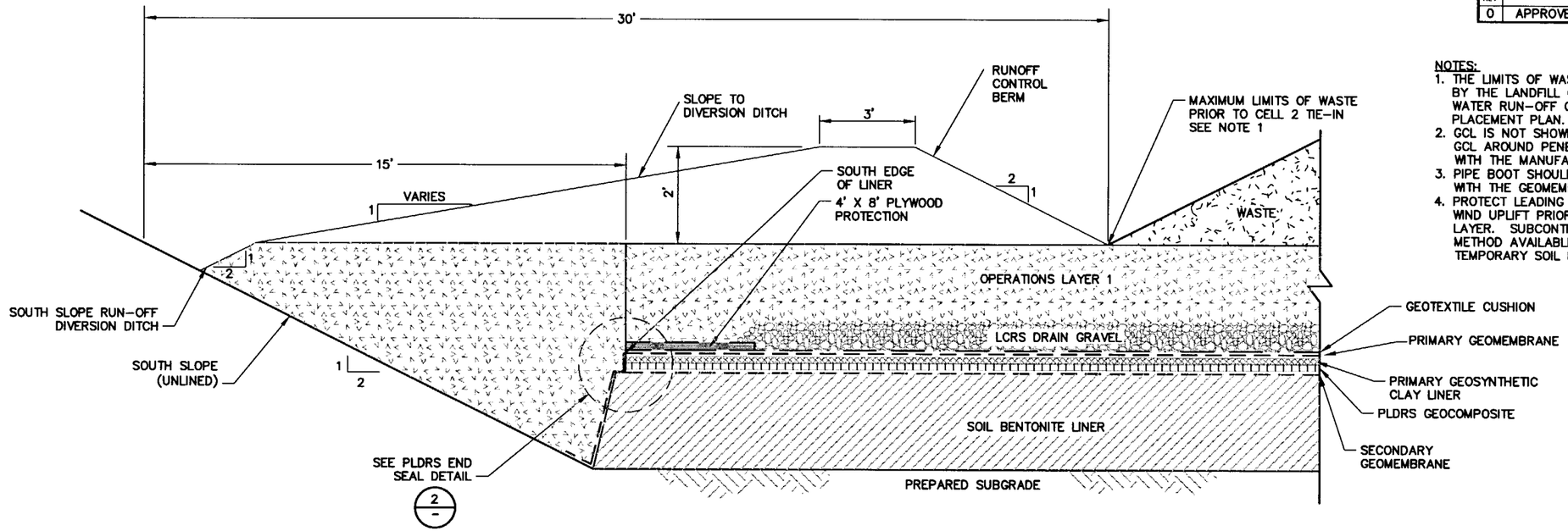

1 CELL 1 SOUTH LINER EDGE TERMINATION DETAIL
C-202, H-201 NTS

NOTES:
1. THE LIMITS OF WASTE SHALL BE DETERMINED BY THE LANDFILL OPERATOR TO MAINTAIN ADEQUATE WATER RUN-OFF CONTROL. SEE THE WASTE PLACEMENT PLAN.
2. GCL IS NOT SHOWN FOR CLARITY. SEAL GCL AROUND PENETRATION IN ACCORDANCE WITH THE MANUFACTURERS REQUIREMENTS.
3. PIPE BOOT SHOULD BE INSTALLED IN ACCORDANCE WITH THE GEOMEMBRANE MANUFACTURERS REQUIEMENTS.
4. PROTECT LEADING EDGE OF GEOMEMBRANE AGAINST WIND UPLIFT PRIOR TO PLACEMENT OF OPERATIONS LAYER. SUBCONTRACTOR SHALL SELECT BEST METHOD AVAILABLE SUCH AS SAND BAGS OR TEMPORARY SOIL BERM.

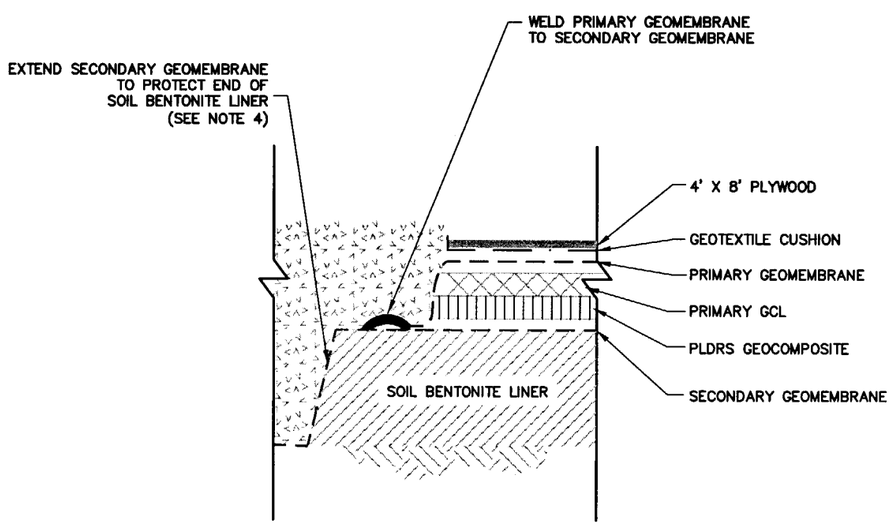

2 PLDRS END SEAL DETAIL
NTS

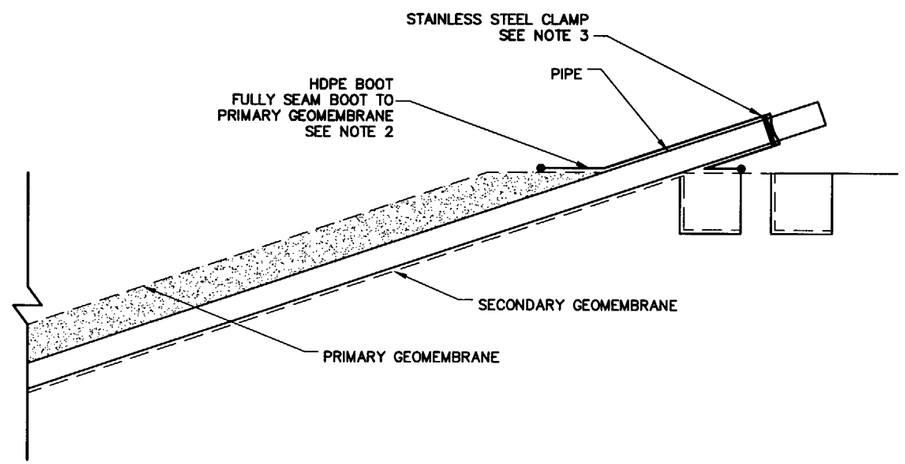

3 TYPICAL GEOMEMBRANE BOOT DETAIL
H-201, H-203 NTS

PROFESSIONAL ENGINEER REGISTERED 9143 STATE OF IDAHO PHILLIP E. CROUSE 5-7-02

SUBCONTRACT NO.	S01-588058
REQUESTER:	
DESIGN:	PHILLIP CROUSE
DRAWN:	JULIE GATES
PROJECT NO.	
SPEC CODE	
FOR REVIEW/APPROVAL SIGNATURES SEE DAR NO.	DAR
EFFECTIVE DATE:	

INEEL (Idaho National Engineering & Environmental Laboratory) BECHTEL BWXT IDAHO, LLC

CH2MHILL MWH MONTGOMERY WATSON HARZA

INEEL CERCLA DISPOSAL FACILITY (ICDF)

LINER SYSTEMS
SECTIONS AND DETAILS

SIZE	CAGE CODE	INDEX CODE NUMBER AREA	TYPE	CL	ORIG	DWG-	REV
D		B21	0100	02			0

SCALE: AS SHOWN CPP SHEET H-205

REVISIONS		
REV	DESCRIPTION	EFFECTIVE DATE:
0	APPROVED FOR CONSTRUCTION	14 MAY 2002

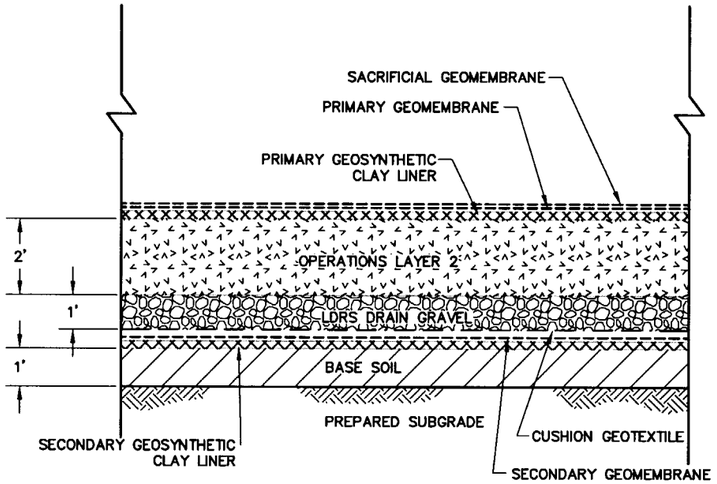

1 / H-202 FLOOR LINER SYSTEM DETAIL
NTS

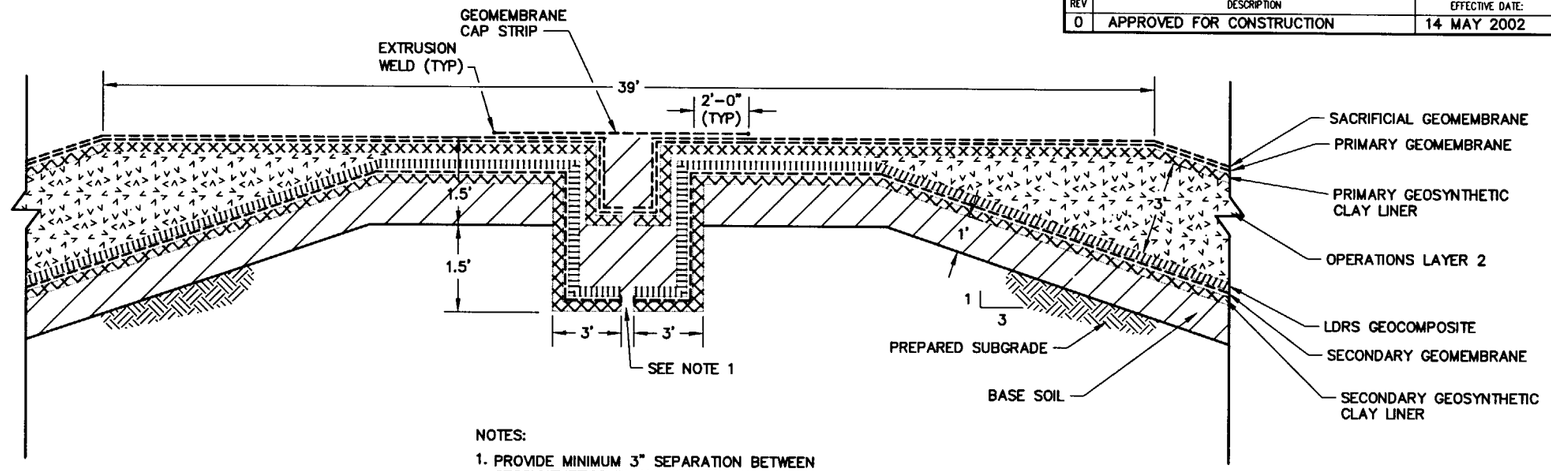

NOTES:

1. PROVIDE MINIMUM 3" SEPARATION BETWEEN GEOSYNTHETICS IN ANCHOR TRENCH FROM EAST AND WEST PONDS.
2. DRAIN ANCHOR TRENCH TO THE SOUTH TO PREVENT PONDED WATER ON GEOSYNTHETICS DURING CONSTRUCTION.

4 / H-202 MIDDLE BERM ANCHOR TRENCH DETAIL
NTS

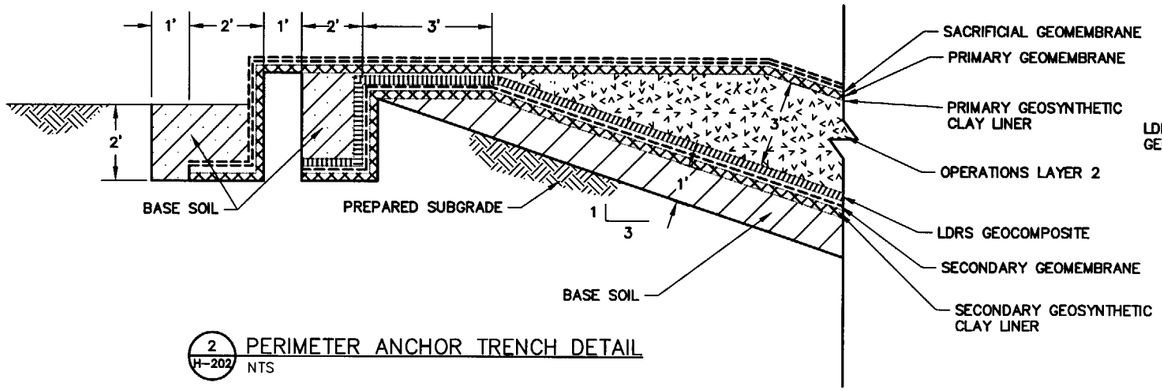

2 / H-202 PERIMETER ANCHOR TRENCH DETAIL
NTS

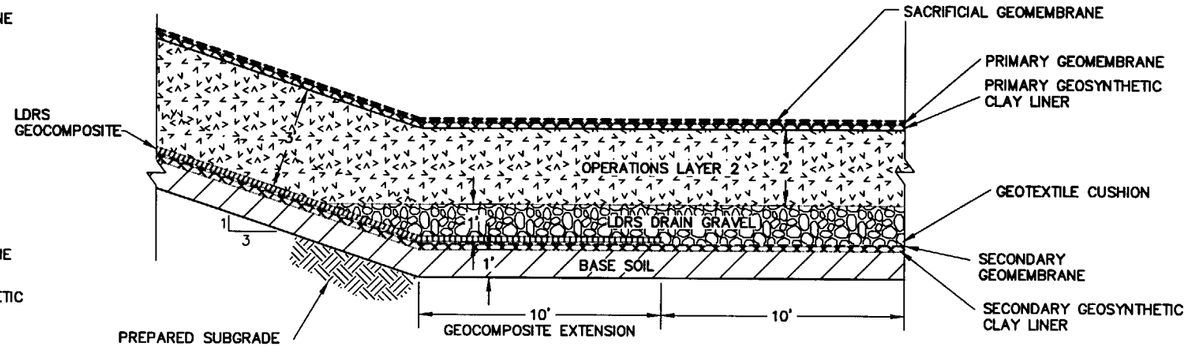

3 / H-202 EVAPORATION POND SUMP AND TOE OF SCOPE DETAIL
NTS

NOTES:

1. RISER PIPES NOT SHOWN FOR CLARITY.
2. PERMANENT ANCHORING SHALL BE INSTALLED ON THE SACRIFICIAL GEOMEMBRANE. IN ACCORDANCE WITH THE SPECIFICATIONS.

PROFESSIONAL ENGINEER REGISTERED 9144 5-7-02 STATE OF IDAHO PHILLIP E. CROUSE

SUBCONTRACT NO.	S01-588058
REQUESTER:	
DESIGN:	PHILLIP CROUSE
DRAWN:	JULIE GATES
PROJECT NO.	
SPEC CODE	
FOR REVIEW/APPROVAL SIGNATURES SEE DAR NO.	DAR
EFFECTIVE DATE:	

INEEL Idaho National Engineering & Environmental Laboratory BECHTEL BWXT IDAHO, LLC

CH2MHILL MWH MONTGOMERY WATSON HARZA

INEEL CERCLA DISPOSAL FACILITY (ICDF)

EVAPORATION POND(S) LINER SYSTEMS SECTIONS AND DETAILS

SIZE	CAGE CODE	INDEX CODE NUMBER AREA	TYPE	CL	ORG	DWG-	REV
D		B21	0100	02			0

SCALE: AS SHOWN CPP SHEET H-206

REVISIONS		
REV	DESCRIPTION	EFFECTIVE DATE:
0	APPROVED FOR CONSTRUCTION	14 MAY 2002

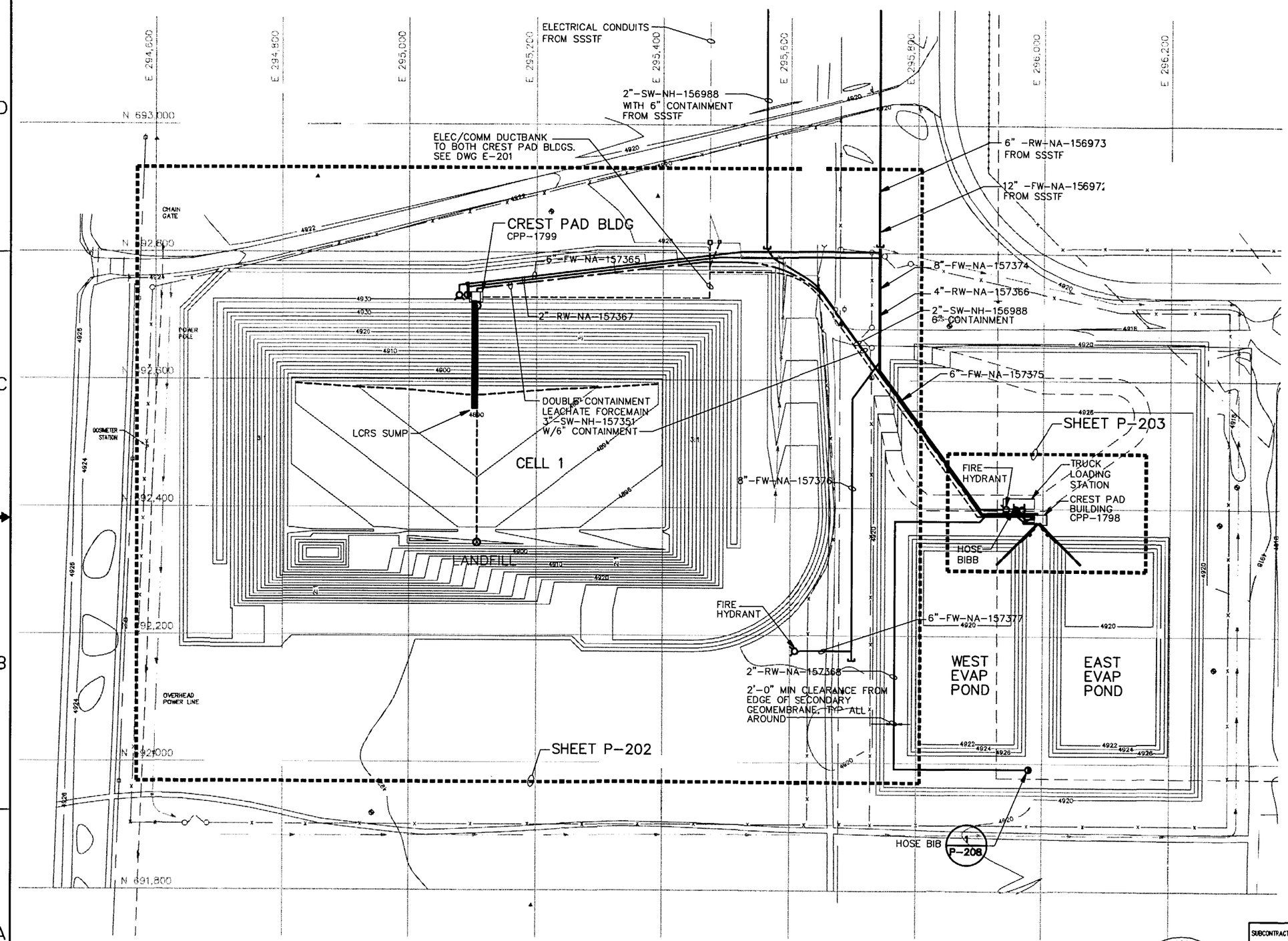

NOTES: (APPLIES TO "P" SERIES DRAWINGS)

1. LOCATION OF UTILITY PIPE/CONDUIT ROUTING IS APPROXIMATE AND TO BE VERIFIED IN FIELD PRIOR TO CONSTRUCTION.
2. ALL BURIED LEACHATE PIPE OUTSIDE OF LANDFILL LINER, EVAP POND LINER, OR STORAGE FACILITIES, IS DOUBLE CONTAINMENT.
3. ROUTE ALL HDPE PIPE TO PROVIDE BEND RADIUS NOT LESS THAN MINIMUM RECOMMENDED BY MANUFACTURER. NOT ALL PIPE FITTINGS ARE SHOWN. PROVIDE PIPE FITTINGS AS NECESSARY TO ATTAIN ALIGNMENT AS SHOWN FOR ALL PIPING SHOWN ON THE DRAWINGS. ALL PIPE IS BUTT FUSED.
4. SEE SPECS FOR PIPE SDR AND TYPE – SLOTTED OR SOLID.
5. CONTOURS REPRESENT FINAL GRADE (SEE C-201)

N

80' 0 80' 160'
Scale In Feet

LEGEND: (APPLIES TO "P" SERIES DRAWINGS)

- SOLID PIPE BURIED (UNLESS SHOWN OTHERWISE)
- SLOTTED PIPE BURIED
- DOUBLE CONTAINMENT LEACHATE FORCEMAIN
- CONDUIT AND CONDUCTORS
- FREEZE PROOF HYDRANT
- HOSE BIBB
- LEACHATE CLEANOUT RISER
- CONNECTION POINT W/ SSSTF PIPING
- DOUBLE CONTAINMENT LEACHATE PIPE SUMP

PROFESSIONAL ENGINEER REGISTERED 3755 STATE OF IDAHO LAWRENCE M. FETTKETHER 5/8/02

INEEL Idaho National Engineering & Environmental Laboratory BECHTEL BWXT IDAHO, LLC

CH2MHILL MWH MONTGOMERY WATSON HARZA

IN EI CERCLA DISPOSAL FACILITY (ICDF)

LEACHATE PIPING PLAN

SUBCONTRACT NO.	S01-588058
REQUESTER:	
DESIGN:	BYRL THOMPSON
DRAWN:	JOSHUA PRETS
PROJECT NO.	
SPEC CODE	
FOR REVIEW/APPROVAL SIGNATURES SEE DAR NO.	DAR
EFFECTIVE DATE:	

SIZE	CAGE CODE	INDEX CODE NUMBER (AREA / TYPE / CL / ORIG)	DWG-	REV
D		B21 / D100 / 02		0

SCALE: AS SHOWN CPP SHEET P-201

REVISIONS		
REV	DESCRIPTION	EFFECTIVE DATE:
0	APPROVED FOR CONSTRUCTION	14 MAY 2002

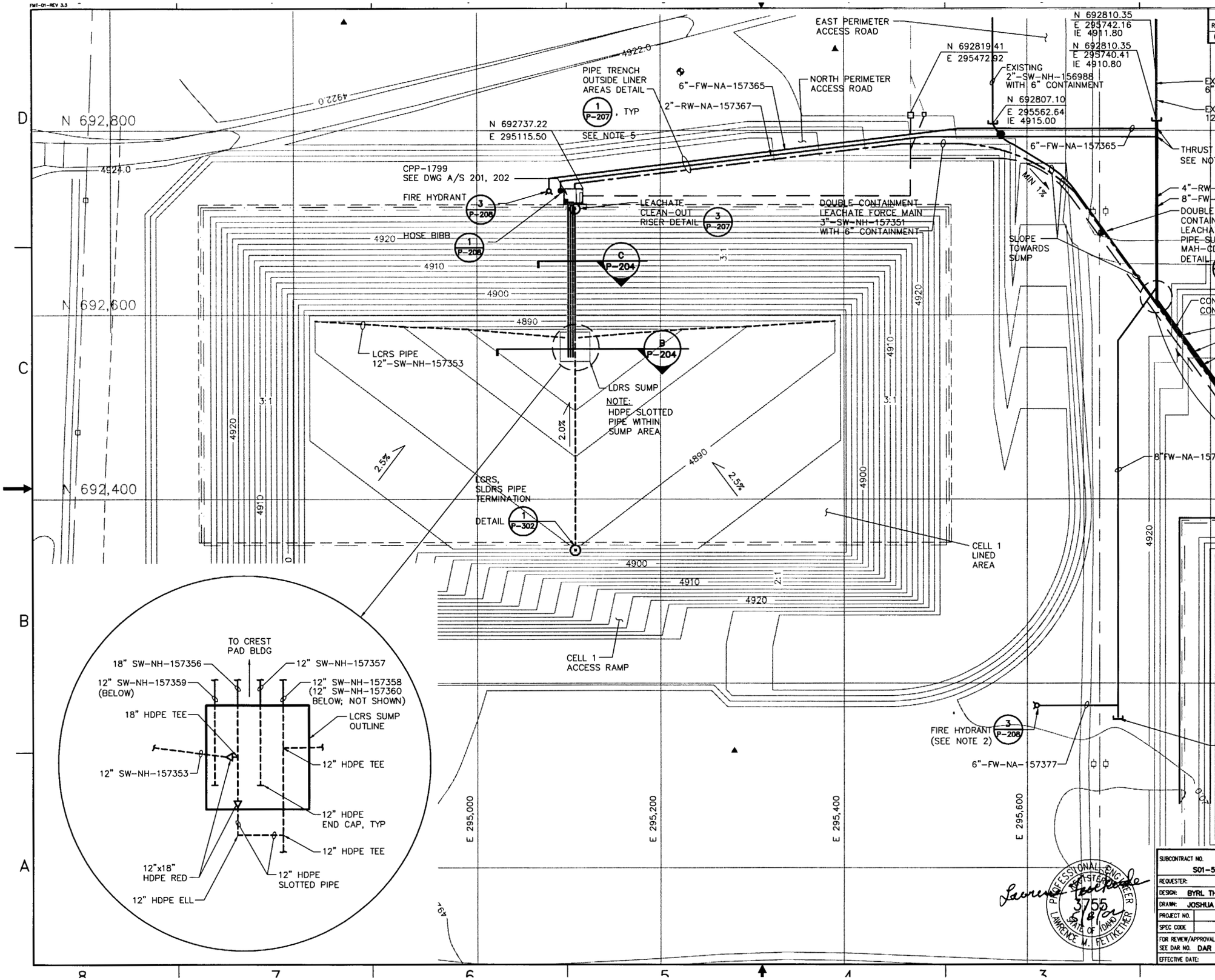

NOTES:

1. INSTALL THRUST BLOCKS AT BENDS, CAPS, AND ALL LOCATIONS WITH UNBALANCED FORCES PER SPECIFICATION SECTION 15505.
2. FIELD LOCATE FIRE HYDRANT TO THE WEST OF EXST FENCE. AVOID CONFLICT WITH FUTURE CELL 2 BERM.
3. CONTOURS IN CELL 1 AREA REPRESENT LINER GRADES.
4. COORDINATE WITH SSSTF REGARDING LOCATIONS OF TIE-IN POINTS SHOWN FOR WATER AND ELECTRICAL LINES.
5. SEE DETAIL 1, P-207 FOR ACTUAL PIPE SEPARATION; PIPES ARE SHOWN SCHEMATICALLY FOR CLARIFICATION PURPOSES.

PROFESSIONAL ENGINEER REGISTERED 3755 STATE OF IDAHO LAWRENCE M. FETTKETHER

INEEL (Idaho National Engineering & Environmental Laboratory) BECHTEL BWXT IDAHO, LLC

CH2MHILL MWH MONTGOMERY WATSON HARZA

INEEL CERCLA DISPOSAL FACILITY (ICDF)

CELL 1 LEAK DETECTION/LEACHATE COLLECTION SYSTEMS PLAN

SUBCONTRACT NO.	S01-588058
REQUESTER:	
DESIGN:	BYRL THOMPSON
DRAWN:	JOSHUA PRETS
PROJECT NO.	
SPEC CODE	
FOR REVIEW/APPROVAL SIGNATURES SEE DAR NO.	DAR
EFFECTIVE DATE:	

SIZE	CAGE CODE	INDEX CODE NUMBER (AREA / TYPE / CL / ORIG)	DWG-	REV
D		B21 / 0100 / 02	CPP	0

SCALE: AS SHOWN SHEET P-202

REVISIONS		
REV	DESCRIPTION	EFFECTIVE DATE:
0	APPROVED FOR CONSTRUCTION	14 MAY 2002

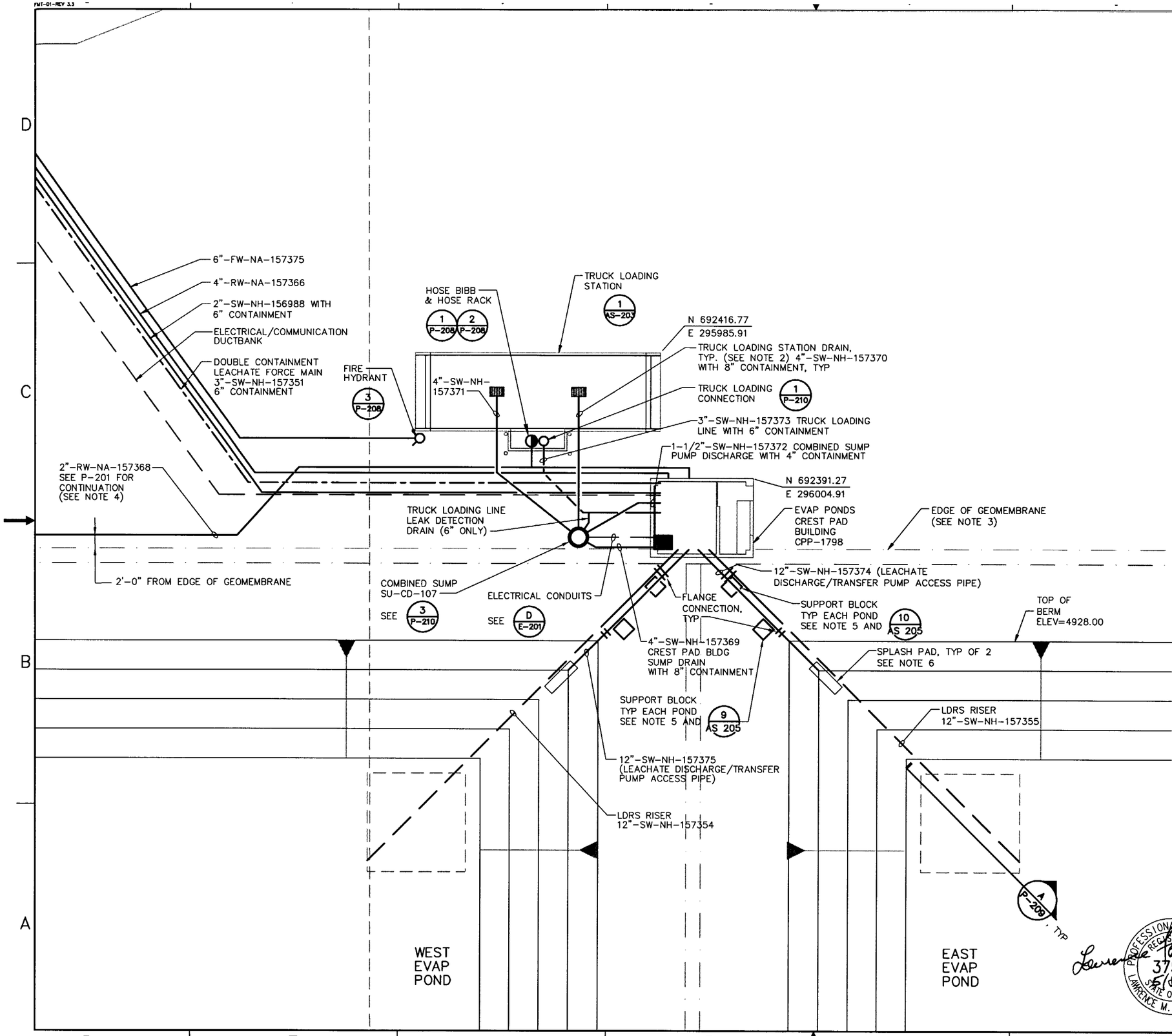

NOTE:

1. DOUBLE CONTAINMENT PIPING TO INCLUDE: DRAINS (4" CARRIER, 8" CONTAINMENT), LEACHATE FORCE MAIN (3" CARRIER, 6" CONTAINMENT), BUILDING SUMP PUMP DISCHARGE (1 1/2" CARRIER, 4" CONTAINMENT), SSSTF SERVICE WASTE (2" CARRIER, 6" CONTAINMENT), AND TRUCK LOADING (3" CARRIER, 6" CONTAINMENT)
2. SLOPE DRAINS TO COMBINED SUMP AT 1% SLOPE. SEE AS-203 & P-210 FOR DETAILS.
3. NOTCH GEOMEMBRANE ANCHOR TRENCH IN VICINITY OF CREST PAD BUILDING FOUNDATION AS NECESSARY.
4. MAINTAIN MINIMUM 2'-0" CLEARANCE FROM EDGE OF SECONDARY GEOMEMBRANE.
5. LOCATE SUPPORT BLOCKS TO PROVIDE MAXIMUM PIPE SPAN OF 7 FEET.
6. PROVIDE ADDITIONAL LAYER OF HDPE LINER MATERIAL (APPROX. 3 FT X 10 FT) TO SERVE AS WEAR PROTECTION AT DISCHARGE PIPE. WELD SPLASH PAD TO MAIN LINER.

PROFESSIONAL ENGINEER REGISTERED 3755 STATE OF IDAHO LAWRENCE M. FETTKETHER 5/8/02

SUBCONTRACT NO.	S01-588058
REQUESTER:	
DESIGN:	BILL FARMER
DRAWN:	JOSHUA PRETS
PROJECT NO.	
SPEC CODE	
FOR REVIEW/APPROVAL SIGNATURES SEE DAR NO.	DAR
EFFECTIVE DATE:	

INEEL Idaho National Engineering & Environmental Laboratory BECHTEL BWXT IDAHO, LLC

CH2MHILL MWH MONTGOMERY WATSON HARZA

INEEL CERCLA DISPOSAL FACILITY (ICDF)

EVAP. POND(S) LEAK DETECTION/ LEACHATE COLLECTION SYSTEMS PLAN

SIZE	CAGE CODE	INDEX CODE NUMBER					DWG-	REV
		AREA	TYPE	Q	DRNG			
D		B21	0100	02				0

SCALE: AS SHOWN CPP SHEET P-203

REVISIONS		
REV	DESCRIPTION	EFFECTIVE DATE:
0	APPROVED FOR CONSTRUCTION	14 MAY 2002

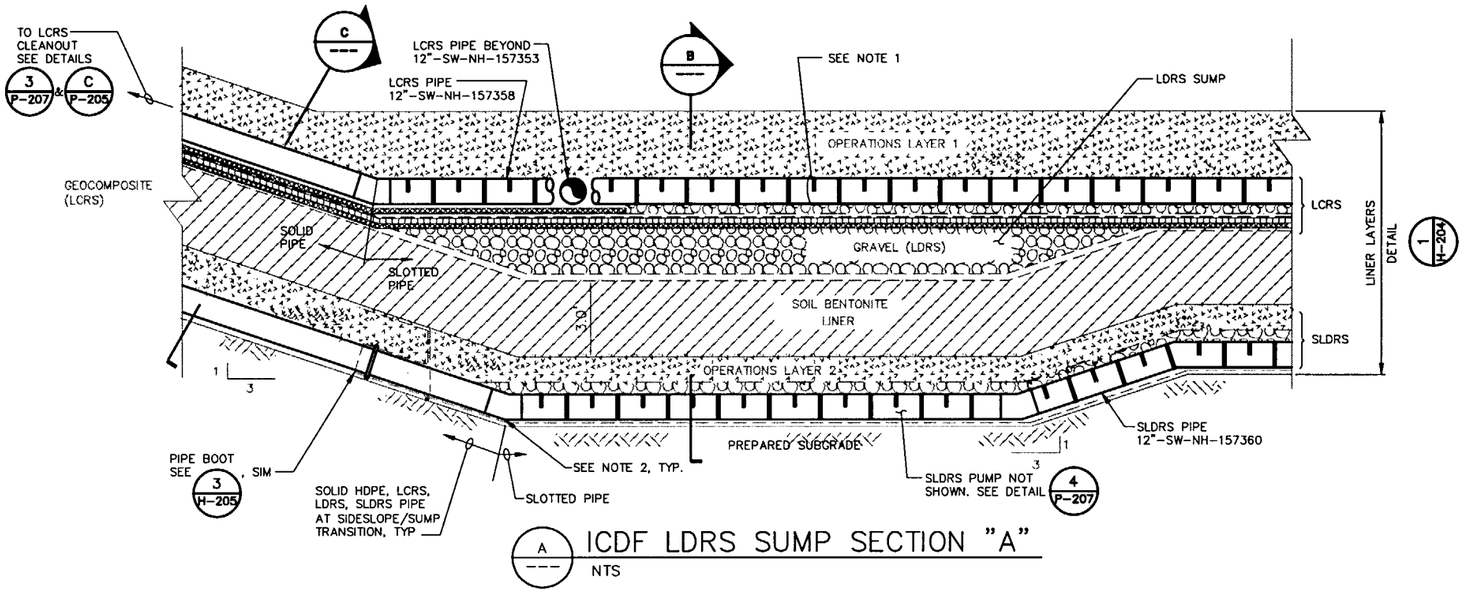

A ICDF LDRS SUMP SECTION "A"
NTS

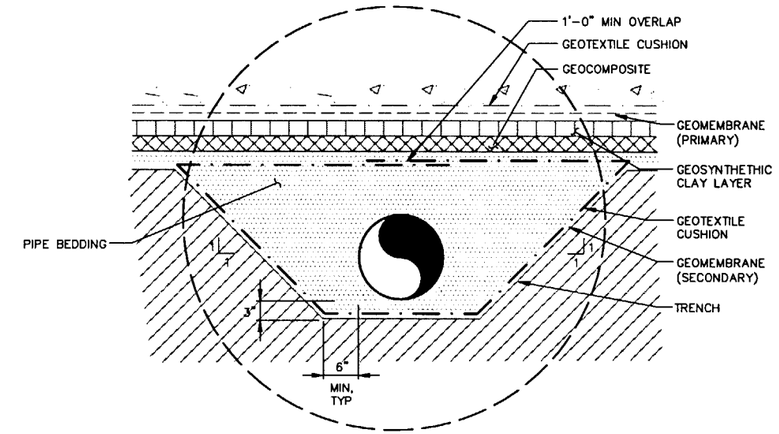

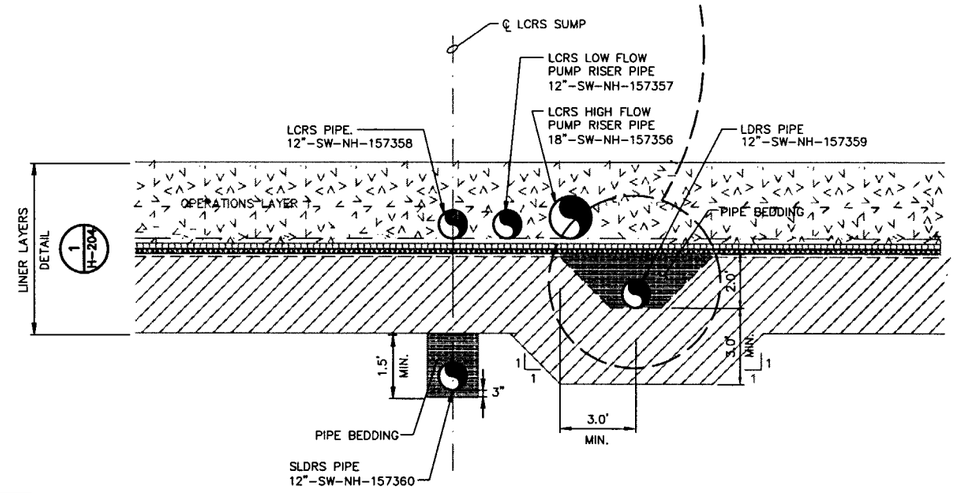

C P-202 ICDF LDRS SUMP SECTION "C"
NTS

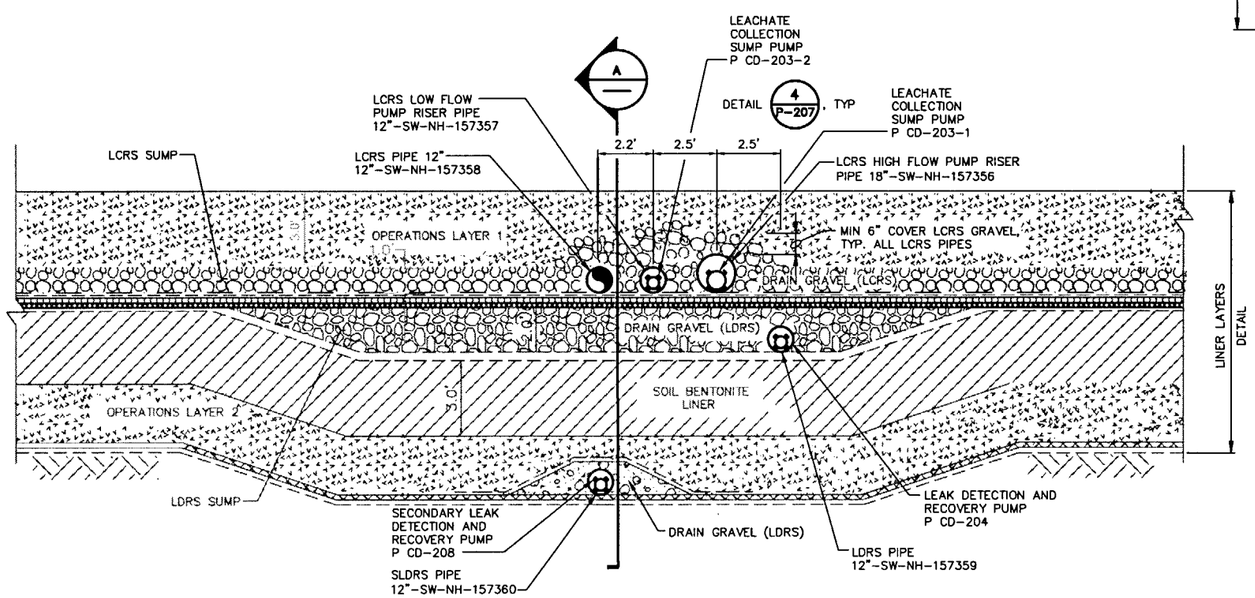

B P-202 ICDF LDRS SUMP SECTION "B"
NTS

NOTES:

1. SOME LAYER THICKNESS FOR GEOSYNTHETIC MTLS ARE SHOWN EXAGGERATED FOR CLARITY. SOME PIPE LOCATIONS SHOWN VERTICALLY ABOVE GEOSYNTHETIC LAYERS FOR CLARITY. ACTUAL INSTALLED CONDITIONS WILL BE PIPE RESTING ON ADJACENT GEOSYNTHETIC LAYER.
2. AT SIDE SLOPE AND SUMP TRANSITIONS, BEND PIPE WITHIN MANUFACTURES RECOMMENDED MIN BEND RADIUS OR USE BUTT-FUSED PIPE FITTINGS TO MAINTAIN CLOSE CONTACT BETWEEN PIPE AND LINER SURFACE. FITTINGS SHALL HAVE SAME SDR AS PIPE. IF USED, CONFIRM W/ PUMP MANUFACTURER THAT FITTINGS ARE COMPATIBLE WITH RAISING AND LOWERING OF PUMP.
3. SEE H-204 FOR SUMP CONSTRUCTION DETAILS.

PROFESSIONAL ENGINEER REGISTERED 3755 STATE OF IDAHO LAWRENCE M. FETTRETCHER 5/8/02

SUBCONTRACT NO.	S01-588058
REQUESTER:	
DESIGN:	BYRL THOMPSON
DRAWN:	JAY WARE
PROJECT NO.	
SPEC CODE	
FOR REVIEW/APPROVAL SIGNATURES SEE DAR NO.	DAR
EFFECTIVE DATE:	

INEEL (Idaho National Engineering & Environmental Laboratory) BECHTEL BWXT IDAHO, LLC

CH2MHILL MWH MONTGOMERY WATSON HARZA

INEEL CERCLA DISPOSAL FACILITY (ICDF)

LEAK DETECTION/LEACHATE COLLECTION SECTIONS AND DETAILS

SIZE	CAGE CODE	INDEX CODE NUMBER AREA	TYPE	CL	ORIG	DWG-	REV
D		B21	0100	02			0

SCALE: AS SHOWN CPP SHEET P-204

REVISIONS		
REV	DESCRIPTION	EFFECTIVE DATE:
0	APPROVED FOR CONSTRUCTION	14 MAY 2002

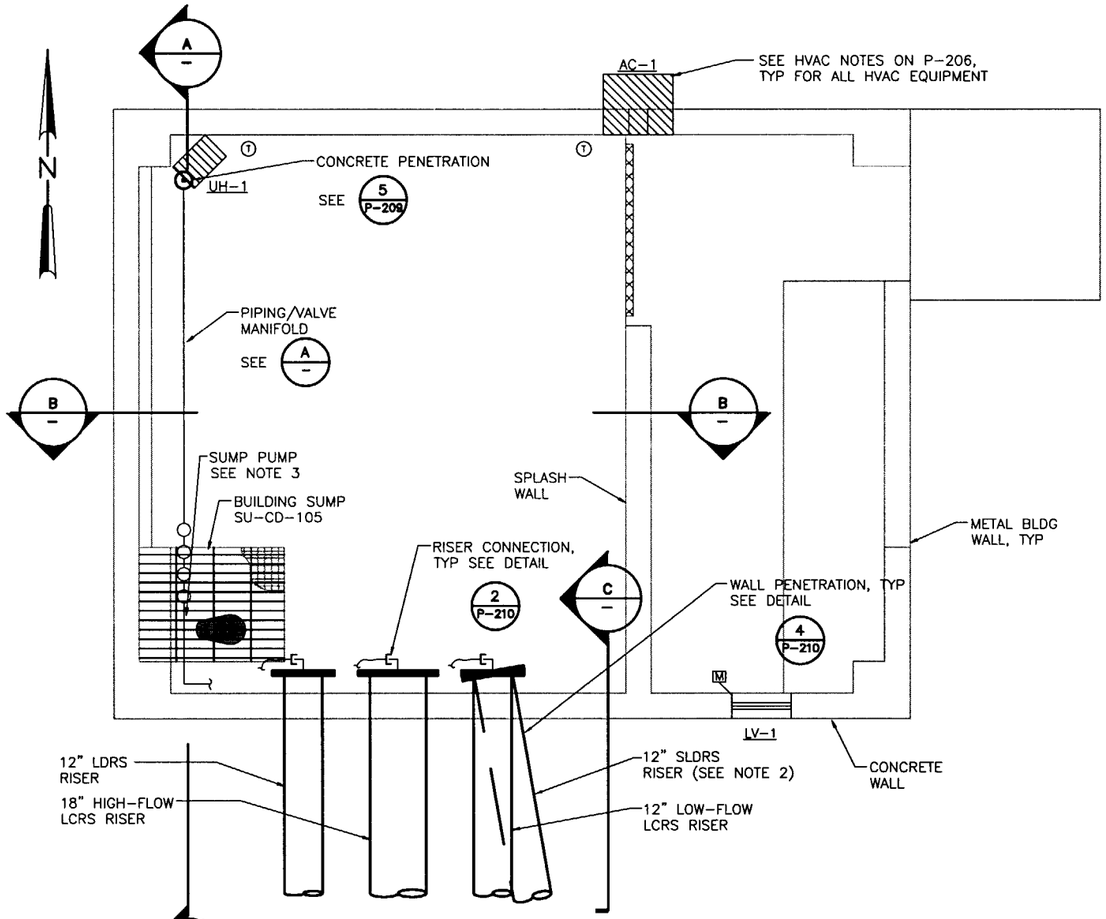

C4 LANDFILL CREST PAD BUILDING (CPP-1799)
1/2" = 1'-0"

Scale in Feet: 2 0 2 4

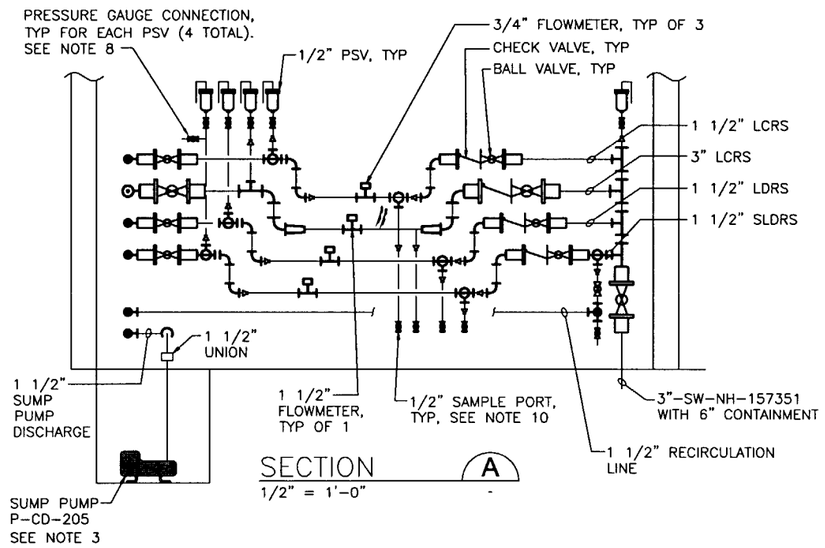

SECTION A
1/2" = 1'-0"

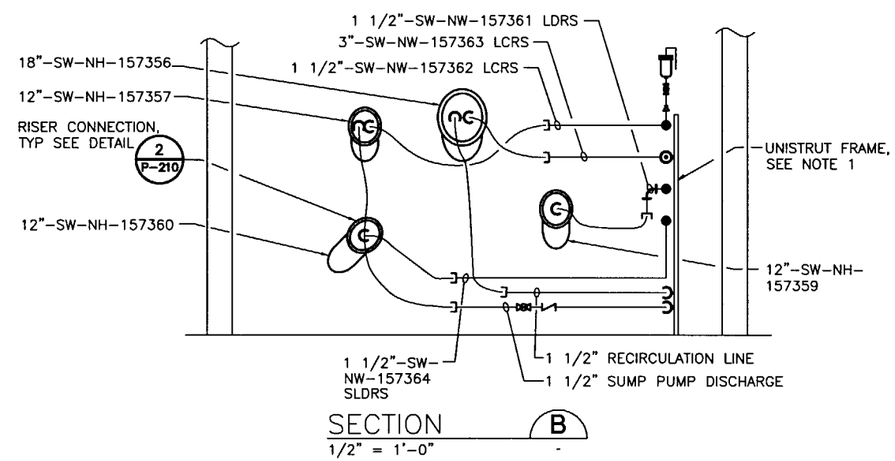

SECTION B
1/2" = 1'-0"

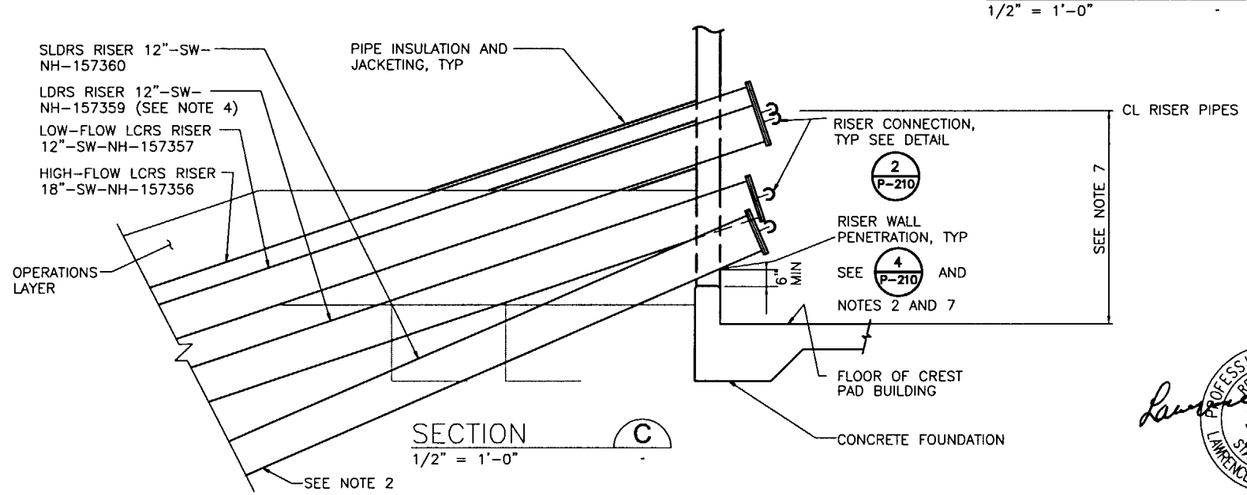

SECTION C
1/2" = 1'-0"

NOTES:

1. SUPPORT PIPING/VALVE MANIFOLD WITH UNISTRUT FRAME ANCHORED TO FLOOR AND ATTACHED TO BLDG STRUCTURAL FRAME.
2. BEND 12" SECONDARY LDRS RISER TO PENETRATE CREST PAD BUILDING ABOVE CURB. DO NOT EXCEED MINIMUM BENDING RADIUS OF 10 DIAMETERS OR AS SPECIFIED BY PIPE SUPPLIER FOR SDR OF PIPE SUPPLIED.
3. PROVIDE SUBMERSIBLE SUMP PUMP RATED FOR 34 GPM AT 10 FT TDH; (APPROX. 1/3 HP). PUMP SHALL BE COMPATIBLE WITH START/STOP CONTROL BY EXTERNAL FLOAT SWITCHES. NOTCH OUT GRATING AROUND PIPING TO ALLOW REMOVAL.
4. SEE DETAIL 3 (H-205) FOR TYPICAL GEOMEMBRANE BOOT DETAIL AT PIPE PENETRATIONS.
5. PROVIDE ONE COMMON MANUAL PUMP REMOVAL WINCH FOR RAISING AND LOWERING THE LEACHATE PUMPS AND ASSOCIATED DISCHARGE PIPING IN THE RISER. WINCH SHALL BE BRAKE (SPUR GEAR) WINCH WITH AUTOMATIC BRAKE; THERN MODEL NO. M4032PB, OR EQUAL. PROVIDE WINCH WITH SUFFICIENT CAPACITY TO HANDLE MINIMUM 180 LF (FOR LANDFILL PUMPS; APPROX. 120 LF FOR EVAPORATION POND LDRS PUMPS) OF 1/8" LIFTING CABLE (STAINLESS STEEL WIRE ROPE). LIFTING CABLE SHALL INCLUDE AND THE WINCH ACCOMMODATE A SWAGE BALL FITTING CABLE END FOR QUICK CONNECT/DISCONNECT. MOUNT WINCH ON STRUT CHANNEL FRAME ATTACHED TO INSIDE OF NORTH WALL. CHANNEL FRAME SHALL SPAN HORIZONTALLY TO ALLOW WINCH TO BE POSITIONED IN LINE WITH THE APPLICABLE RISER PIPE OPENING. FRAME SHALL PROVIDE SUFFICIENT CLEARANCE FOR WINCH HANDLE ROTATION.
6. PROVIDE TWO MANUAL HOSE REELS FOR SEPARATELY HANDLING THE LEACHATE PUMP POWER AND CONTROL CABLES. HOSE REELS SHALL BE HEAVY-DUTY HAND CRANK REELS WITH ADJUSTABLE SPOOL ROTATION DRAG AND SPOOL LOCK PINS. PROVIDE REELCRAFT MODEL NO. C33118LI (GRAINGER NO. 5Z338) OR EQUAL. INSTALL DROP-IN ANCHORS IN FLOOR THAT MATCH HOSE REEL "FEET" BOLT PATTERN FOR BOTH REELS. LEAVE BOLTS IN PLACE TO PREVENT ACCUMULATION OF DIRT, ETC.
7. FOR RISER PIPES, BEND TO MINIMUM RADIUS ALLOWED BY MANUFACTURER OR PROVIDE FITTINGS AS REQUIRED TO MAINTAIN MAXIMUM 4'-6" HEIGHT ABOVE CREST PAD BUILDING FLOOR.
8. PROVIDE ONE PORTABLE PRESSURE GAUGE WITH 0-100 PSI RANGE.
9. PROVIDE HYDRAULIC LIFT TABLE FOR HANDLING LEACHATE PUMPS AT EACH CREST PAD BUILDING. PROVIDE WESCO MODEL NO. LT-10-1836, OR EQUAL.
10. EXTEND SAMPLE LINES SO OPENING IS ABOVE TROUGH.

PROFESSIONAL ENGINEER REGISTERED STATE OF IDAHO LAWRENCE M. FETTKETHER 3755 5/8/02

SUBCONTRACT NO.	S01-588058
REQUESTER:	
DESIGN:	BILL FARMER
DRAWN:	JOSHUA PRETS
PROJECT NO.	
SPEC CODE	
FOR REVIEW/APPROVAL SIGNATURES SEE DAR NO.	DAR
EFFECTIVE DATE:	

INEEL (Idaho National Engineering & Environmental Laboratory) BECHTEL BWXT IDAHO, LLC

CH2MHILL MWH MONTGOMERY WATSON HARZA

INEEL CERCLA DISPOSAL FACILITY (ICDF)

LANDFILL CREST PAD BUILDING MECHANICAL PLAN

SIZE	CAGE CODE	INDEX CODE NUMBER AREA	TYPE	CL	ORIG	DWG-	REV
D		B21	0100	02			0

SCALE: AS SHOWN CPP SHEET P-205

REVISIONS		
REV	DESCRIPTION	EFFECTIVE DATE:
0	APPROVED FOR CONSTRUCTION	14 MAY 2002

HVAC SEQUENCE OF CONTROL

1. AC UNIT WILL OPERATE CONTINUOUSLY WHENEVER THE ROOM TEMPERATURE IS ABOVE 85 DEG F. THE ROOM THERMOSTAT SETPOINT IS 85 DEG. F. THE OUTSIDE AIR TEMPERATURE SENSOR WILL SHUT THE UNIT DOWN WHEN OUTDOOR TEMPERATURE DROPS BELOW 32 DEG. F. THE UNIT CONTROL PANEL HAS AN AUX. SWITCH TO OPEN THE RELIEF DAMPER WHEN THE AC UNIT IS ON.
2. UH WILL BE CONTROLLED BY THE HEATING THERMOSTAT SUPPLIED WITH THE UH. THE THERMOSTAT SETPOINT IS 50 DEG F.

HVAC EQUIPMENT LIST:

UH-1,2 – ELECTRIC UNIT HEATERS – TRANE, MODEL UHEC-053DACA, 5.0 KW, 460V/3PH. ACCESSORIES SHALL INCLUDE WALL MOUNTED THERMOSTAT FOR FREEZE PROTECTION. ELECTRICAL DATA: 6.1 MCA, 15 AMPS FUSE.

LV-1,2 – RELIEF LOUVER, RUSKIN, MODEL ELF375D, 700 CFM. 24"x24". PROVIDE WITH MOTORIZED DAMPER, DAMPER ACTUATOR – BELIMO, MODEL NF120US, 120 VAC, SPRING RETURN, INTERLOCK WITH AC-1,2.

AC-1,2 – WALL MOUNTED AIR CONDITIONER. BARD MODEL CT241RB3Z. 700 CFM @ 0.25" E.S.P. WITH RETURN GRILLE AND 1" WASHABLE FILTER, 20,000 BTUH TOTAL/12,200 BTUH SENSIBLE COOLING CAPACITY @ 120 DEG F. AMBIENT AND 85/72 DEG F DB/WB RETURN AIR. 208V/3 PH, 1/4 HP- BLOWER MOTOR. ELECTRICAL DATA: SINGLE POINT, 3 KW STRIP HEATER, 14 MCA, 20 AMPS FUSE. ACCESSORIES SHALL INCLUDE OVERSIZED CONDENSER, EIFMC-2X ECONOMIZER, MBC-2X SIDE MOUNTING BRACKETS, SGC-2 SUPPLY GRILLE, RFGC-2 RETURN AIR FILTER GRILLE 14x12, BRUSHED ALUMINUM AND LOW AMBIENT CONTROL KIT. PROVIDE MANUFACTURER'S REQUIRED THERMOSTAT AND CONTROL PANEL. TYP. OF 2.

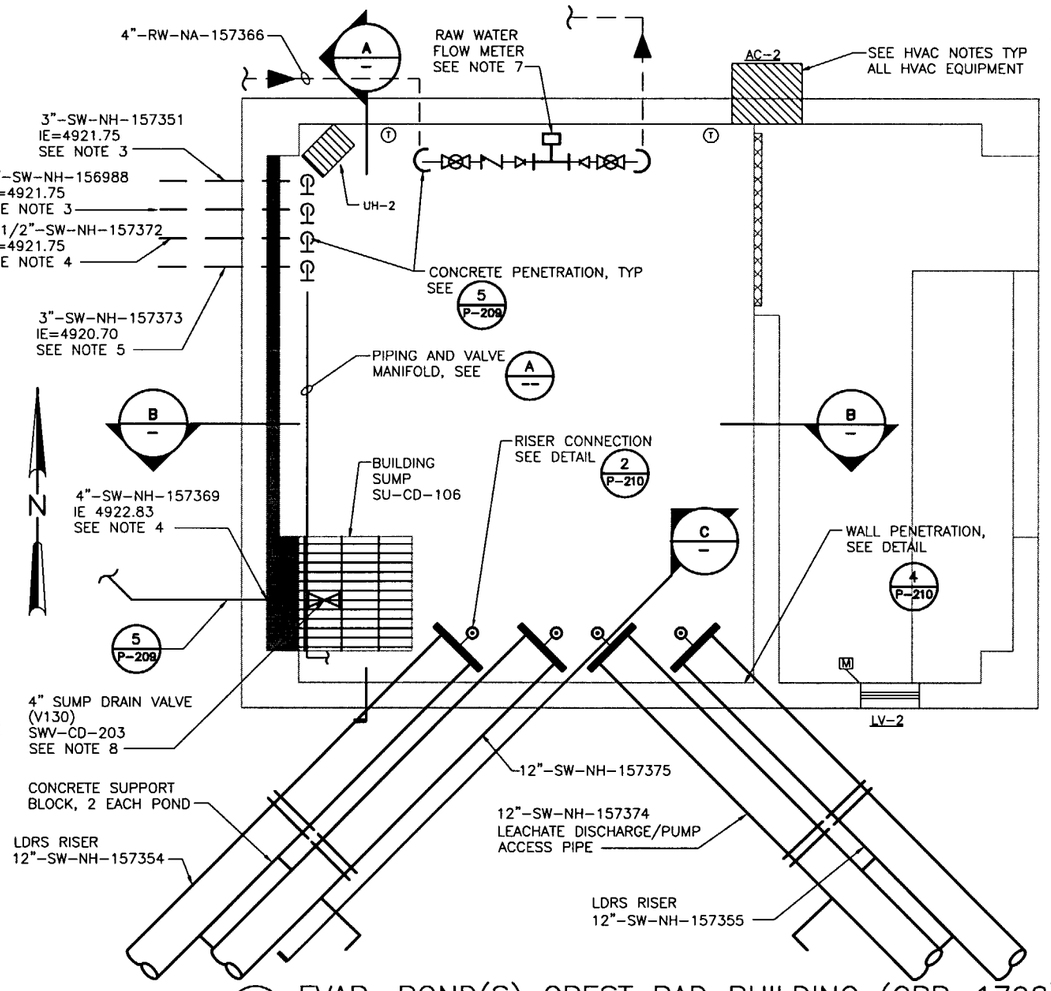

C4 EVAP. POND(S) CREST PAD BUILDING (CPP-1798)
1/2" = 1'-0"

NOTES:

1. PROVIDE ONE COMMON MANUAL PUMP REMOVAL WINCH FOR RAISING AND LOWERING THE LEACHATE PUMPS AND ASSOCIATED DISCHARGE PIPING IN THE RISER. WINCH SHALL BE BRAKE (SPUR GEAR) WINCH WITH AUTOMATIC BRAKE; THERN MODEL NO. M4032PB, OR EQUAL. PROVIDE WINCH WITH SUFFICIENT CAPACITY TO HANDLE MINIMUM 180 LF (FOR LANDFILL PUMPS; APPROX. 120 LF FOR EVAPORATION POND LDRS PUMPS) OR 1/8" LIFTING CABLE (STAINLESS STEEL WIRE ROPE). LIFTING CABLE SHALL INCLUDE AND THE WINCH ACCOMMODATE A SWAGE BALL FITTING CABLE END FOR QUICK CONNECT/DISCONNECT. MOUNT WINCH ON STRUT CHANNEL FRAME ATTACHED TO INSIDE OF NORTH WALL. CHANNEL FRAME SHALL SPAN HORIZONTALLY TO ALLOW WINCH TO BE POSITIONED IN LINE WITH THE APPLICABLE RISER PIPE OPENING. FRAME SHALL PROVIDE SUFFICIENT CLEARANCE FOR WINCH HANDLE ROTATION.
2. PROVIDE TWO MANUAL HOSE REELS FOR SEPARATELY HANDLING THE LEACHATE PUMP POWER AND CONTROL CABLES. HOSE REELS SHALL BE HEAVY-DUTY HAND CRANK REELS WITH ADJUSTABLE SPOOL ROTATION DRAG AND SPOOL LOCK PINS. PROVIDE REELCRAFT MODEL NO. C33118LI (GRAINGER NO. 5Z338) OR EQUAL. INSTALL DROP-IN ANCHORS IN FLOOR THAT MATCH HOSE REEL "FEET" BOLT PATTERN FOR BOTH REELS. LEAVE BOLTS IN PLACE TO PREVENT ACCUMULATION OF DIRT, ETC.
3. SLOPE LEACHATE FORCE MAIN AND SSSTF WASTEWATER LINES BACK TO LEAK DETECTION VAULT AT 1% MINIMUM SLOPE.
4. SLOPE SUMP PUMP DISCHARGE AND ALL DRAINS TO COMBINED SUMP AT 1% MINIMUM SLOPE.
5. SLOPE TRUCK LOADING LINE FROM BOTH ENDS TO LOW POINT ADJACENT TO COMBINED SUMP AT 1% MINIMUM SLOPE.
6. PIPE HEIGHT SHALL BE 4'-0" MAXIMUM ABOVE FLOOR OF EVAPORATION CREST PAD BUILDING TO PIPE CENTERLINE.
7. PROVIDE 1 1/2" FLOW METER (BY LEACHATE PUMP SUPPLIER). MOUNT ON WALL BELOW WINCH SUPPORT FRAME.
8. INSTALL VALVE AS LOW AS POSSIBLE ALLOWING FOR FLANGE CLEARANCE FROM SUMP FLOOR. EXTEND OPERATOR TO GRATING LEVEL WITH HOLE CUT FOR ACCESS TO SQUARE NUT.
9. PROVIDE HYDRAULIC LIFT TABLE FOR HANDLING LEACHATE PUMPS AT EACH CREST PAD BUILDING. PROVIDE WESCO MODEL NO. LT-10-1836, OR EQUAL.
10. PROVIDE ONE PORTABLE TRANSFER PUMP AS SPECIFIED IN SECTION 11312, LEACHATE PUMPS. TRANSFER PUMP SHALL HAVE SUFFICIENT POWER AND CONTROL CABLE LENGTH TO REACH FROM THE BOTTOM OF POND SLOPE, UP THE SLOPE, THROUGH THE DISCHARGE RISER PIPE, AND INTO THE CREST PAD BUILDING FOR CONNECTION AT THE APPLICABLE TERMINAL BLOCK/DISCONNECT SWITCH. THE TRANSFER PUMP DISCHARGE SHALL BE THROUGH FLEXIBLE HOSE (11906 ROYALFLEX, VINYL NITRILE, BY BOSTON INDUSTRIAL PRODUCTS; OR EQUAL) FROM THE BOTTOM OF POND SLOPE, UP THE SLOPE, THROUGH THE DISCHARGE RISER PIPE, AND INTO THE CREST PAD BUILDING FOR CONNECTION TO THE PIPING MANIFOLD ON THE SOUTH WALL. TRANSFER PUMP TO BE LOWERED IN PLACE WITH BOOM TRUCK.
11. PROVIDE "NORMAL" HDPE DISCHARGE PIPE EXTENDED FROM FLANGE CONNECTION TO AN ELEVATION TWO FEET BELOW TOP OF BERM. FOR PONDS TRANSFER, REMOVE DISCHARGE PIPE AT FLANGE AND INSERT TRANSFER PUMP DISCHARGE HOSE AND CABLES THROUGH RISER PIPE INTO CREST PAD BUILDING.
12. SUPPORT PIPING/VALVE MANIFOLD WITH UNISTRUT FRAME ANCHORED TO FLOOR AND ATTACHED TO BLDG STRUCTURAL FRAME.

HVAC GENERAL NOTES

1. BUILDING SPECIFICATIONS, DRAWINGS AND LATEST REVISIONS ON CONTRACT DOCUMENTS FOR MECHANICAL WORK SHALL APPLY TO THIS DRAWING.
2. ALL WORK SHALL COMPLY WITH ALL APPLICABLE CODES AND REGULATIONS.
3. CHECK, VERIFY AND MAKE OPERABLE ALL NEW EQUIPMENT TO COMPLY WITH MANUFACTURER'S SPECIFICATIONS.
4. ALL WALL PENETRATIONS SHALL BE SEALED WATER TIGHT. PROVIDE FLASHING AND COUNTER FLASHING AS REQUIRED.
5. COORDINATE ALL WORK WITH OTHER TRADES AND STRUCTURE.
6. THE MECHANICAL DRAWINGS ARE DIAGRAMMATIC IN CHARACTER AND DO NOT NECESSARILY INDICATE EVERY DETAIL.
7. MECHANICAL SUB-CONTRACTOR SHALL FURNISH STARTERS FOR ALL THREE-PHASE MECHANICAL EQUIPMENT (EXCEPT FOR STARTERS THAT ARE SHOWN TO BE PROVIDED IN MOTOR CONTROL CENTERS). STARTERS SHALL HAVE THREE-LEG CLASS 10 TRIP-TREE OVERLOAD PROTECTION, WITH MANUAL RESET, AND SHALL BE NEMA RATED. STARTERS SHALL BE INSTALLED BY ELECTRICAL CONTRACTOR.

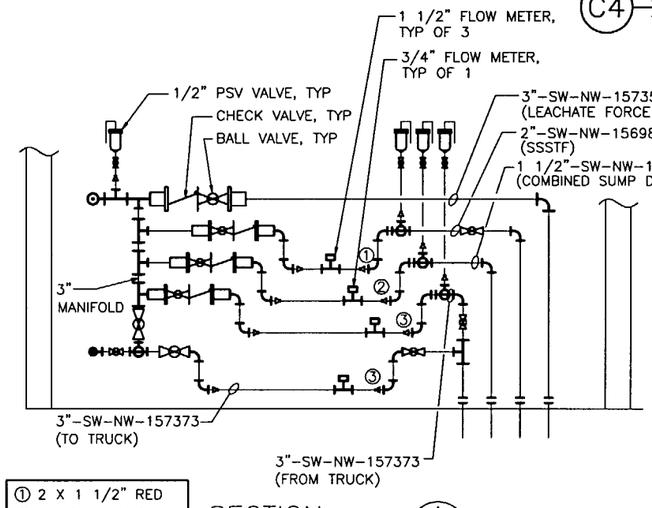

① 2 X 1 1/2" RED
② 1 1/2 X 3/4" RED
③ 3" X 1 1/2" RED

SECTION A
1/2" = 1'-0"

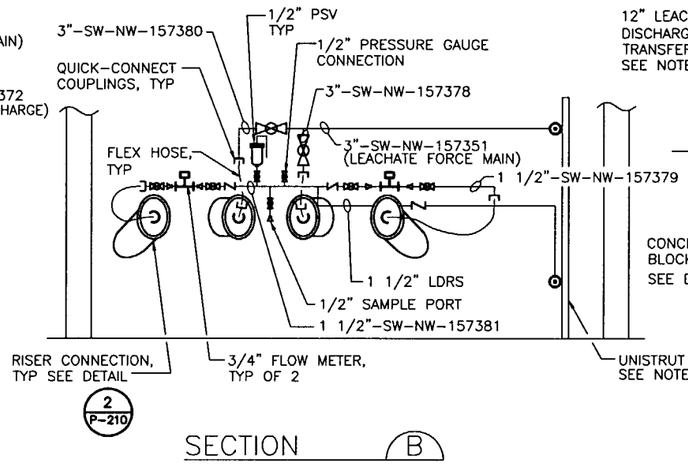

SECTION B
1/2" = 1'-0"

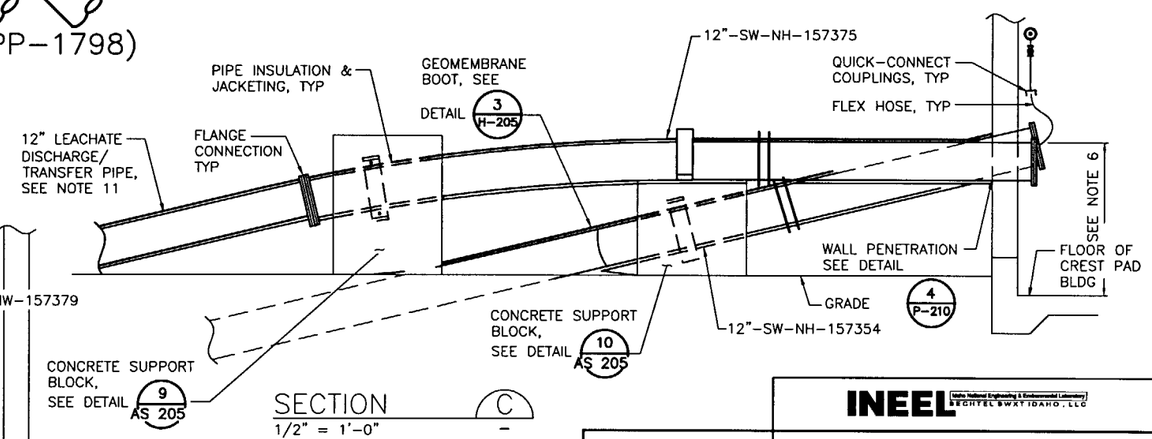

SECTION C
1/2" = 1'-0"

PROFESSIONAL ENGINEER REGISTERED STATE OF IDAHO LAWRENCE M. FETTKETHER 3755

SUBCONTRACT NO.	S01-588058
REQUESTER:	
DESIGN:	BILL FARMER
DRAWN:	JOSHUA PRETS
PROJECT NO.	
SPEC CODE	
FOR REVIEW/APPROVAL SIGNATURES SEE DAR NO.	DAR
EFFECTIVE DATE:	

INEEL (Idaho National Engineering & Environmental Laboratory) BECHTEL BWXT IDAHO, LLC

CH2MHILL MWH MONTGOMERY WATSON HARZA

INEEL CERCLA DISPOSAL FACILITY (ICDF)

EVAP POND(S) CREST PAD BUILDING MECHANICAL PLAN AND SECTIONS

SIZE	CAGE CODE	INDEX CODE NUMBER AREA	TYPE	CL	ORIG	DWG-	REV
D		B21	0100	02			0

SCALE: AS SHOWN CPP SHEET P-206

REVISIONS		
REV	DESCRIPTION	EFFECTIVE DATE:
0	APPROVED FOR CONSTRUCTION	14 MAY 2002

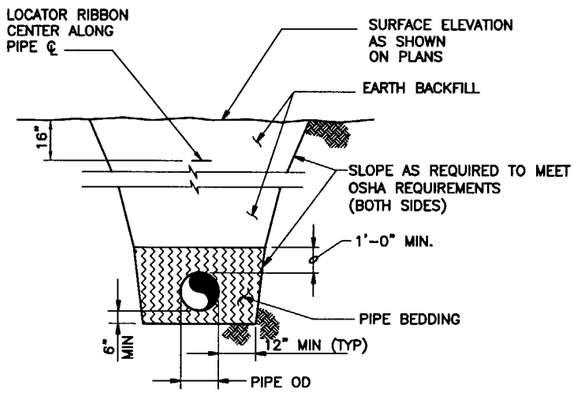

NOTE:

1. MINIMUM COVER OVER PIPE CROWN = 6'-0"
2. MIN. 1.0' HORIZONTAL SEPARATION (PIPE OD) BETWEEN ADJACENT PIPES UNLESS SHOWN OTHERWISE.

1 / P-201, P-202 — PIPE TRENCH
N.T.S.

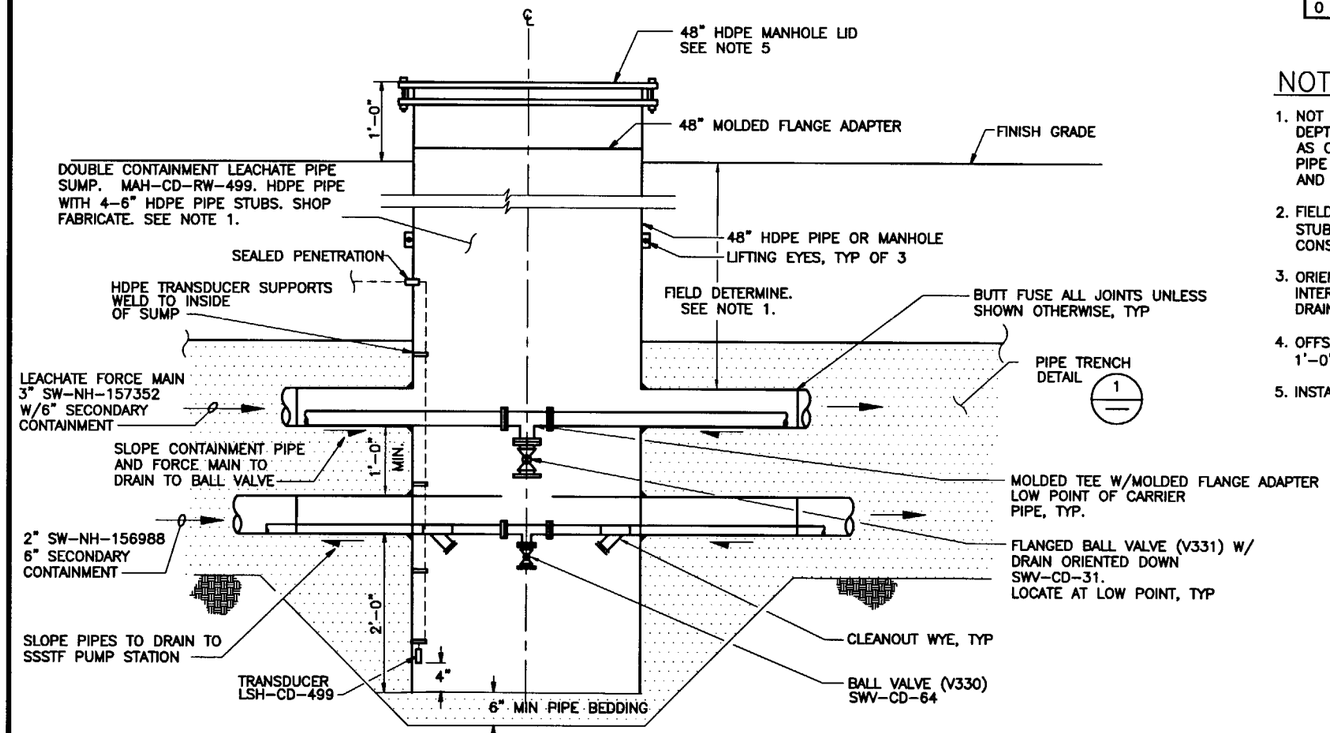

2 / P-202 — DOUBLE CONTAINMENT LEACHATE PIPE SUMP
N.T.S.

NOTES:

1. NOT ALL SUMP DIMENSIONS SHOWN. DETERMINE SUMP DEPTH BASED ON PIPE AND FINISH GRADE ELEVATIONS AS CONSTRUCTED IN FIELD. MAINTAIN PIPE SLOPE AND PIPE COVER REQUIREMENTS SHOWN ON THE DRAWINGS AND AS REQUIRED IN THE SPECS.
2. FIELD DETERMINE ORIENTATIONS AND PIPE INVERTS OF STUBOUTS. COORDINATE 2" SW PIPING W/SSSTF CONSTRUCTION.
3. ORIENT BALL VALVES AND TEES TO MINIMIZE INTERFERENCE. TEES CAN BE OFF-VERTICAL BUT MUST DRAIN.
4. OFFSET LEACHATE FORCE MAIN AND 2" SW FROM 1'-0" FROM CENTERLINE OF LEACHATE PIPE SUMP.
5. INSTALL 4 BOLLARDS AROUND MANHOLE LID.

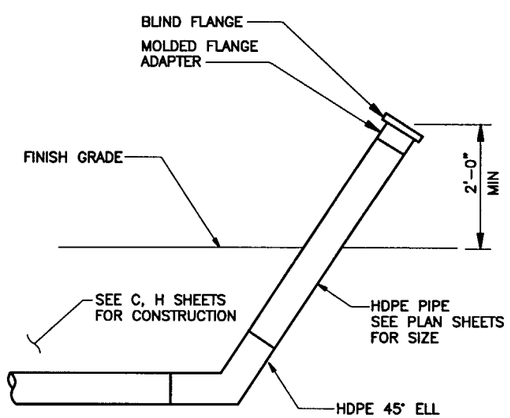

3 / P-202, P-301, P-302 — LEACHATE CLEANOUT
N.T.S.

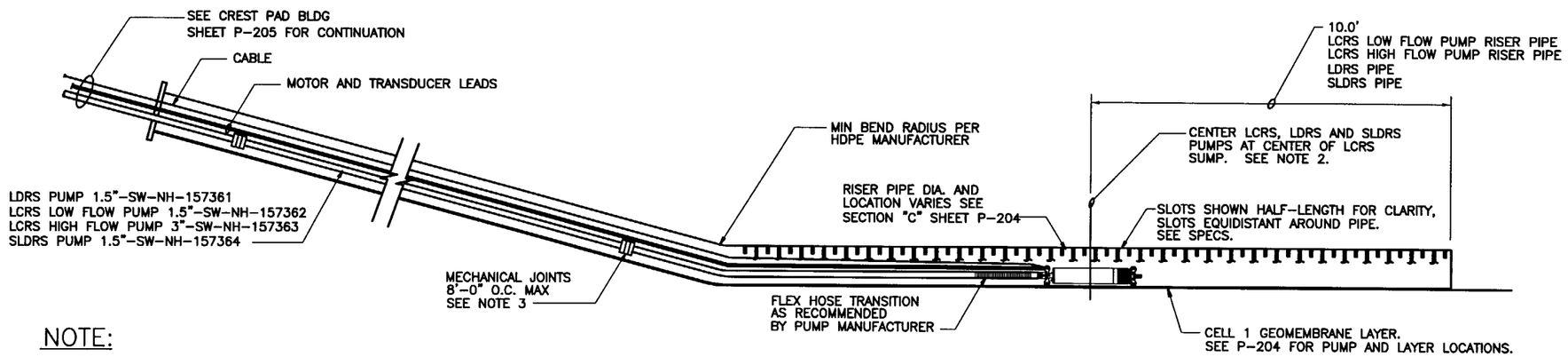

NOTE:

1. CREST PAD BUILDING, ANCHOR TRENCH AND TOP OF BERM AT SIDE SLOPE NOT SHOWN. SEE SHEET P-205.
2. INSTALL PUMP AND PUMP DISCHARGE PIPING AT PIPE TEMP BETWEEEN 50-70°F.
3. PROVIDE FIBER GLASS-FILLED POLYPROPYLENE QUICK-CONNECT CAM COUPLINGS WITH STAINLESS STEEL RINGS, ARMS, AND PINS THREADED ONTO TRANSITION FITTINGS (HDPE X STAINLESS STEEL THREADED NIPPLE) AT EACH JOINT LOCATION. WRAP PLASTIC WIRETIE THROUGH PINS AND AROUND COUPLINGS TO HOLD ARMS CLOSED.

   ALTERNATIVE EQUIPMENT CONNECTION SYSTEMS WILL BE CONSIDERED, SUBJECT TO APPROVAL.

4 / P-204 — TYPICAL RISER PIPE AND SUMP INSTALLATION
N.T.S.

PROFESSIONAL ENGINEER REGISTERED 5755 STATE OF IDAHO LAWRENCE M. FETTKETHER 5/8/02

SUBCONTRACT NO.	S01-588058
REQUESTER:	
DESIGN:	BYRL THOMPSON
DRAWN:	BOB LATTA
PROJECT NO.	
SPEC CODE	
FOR REVIEW/APPROVAL SIGNATURES SEE DAR NO.	DAR
EFFECTIVE DATE:	

INEEL — Idaho National Engineering & Environmental Laboratory — BECHTEL BWXT IDAHO, LLC

CH2MHILL — MWH MONTGOMERY WATSON HARZA

INEEL CERCLA DISPOSAL FACILITY (ICDF)

LEAK DETECTION/LEACHATE COLLECTION SECTIONS AND DETAILS

SIZE	CAGE CODE	INDEX CODE NUMBER (AREA / TYPE / Q / ORIG)	DWG-	REV
D		B21 / 0100 / 02	CPP	0

SCALE: AS SHOWN — SHEET P-207

REVISIONS		
REV	DESCRIPTION	EFFECTIVE DATE:
0	APPROVED FOR CONSTRUCTION	14 MAY 2002

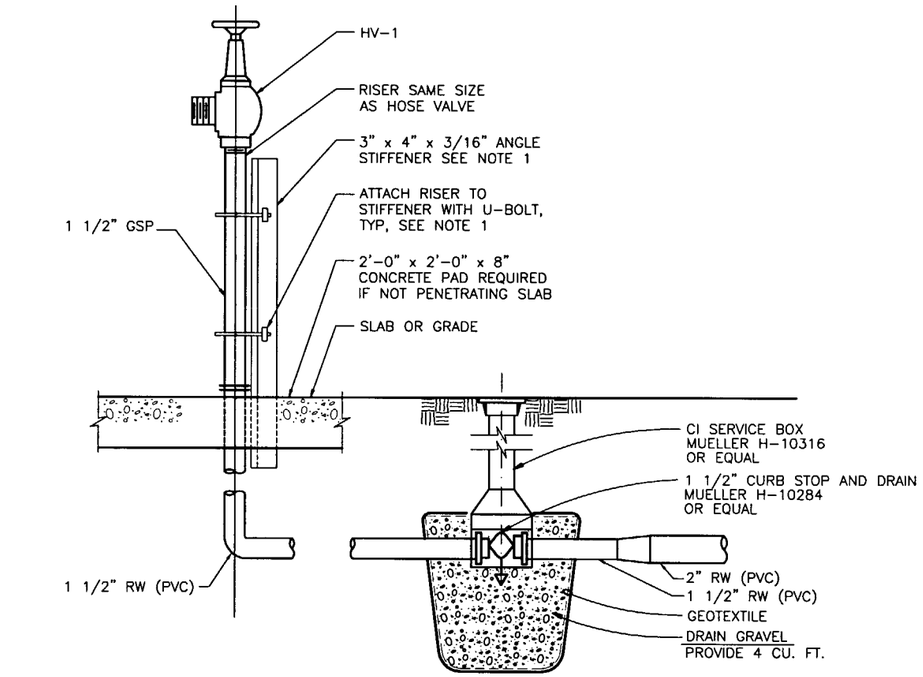

NOTE:

1. ANGLE STIFFENER AND RISER ATTACHMENT HARDWARE SHALL BE GALVANIZED STEEL

1 EXTERIOR HOSE BIBB

AS-203, P-201, P-202, P-203 — NTS

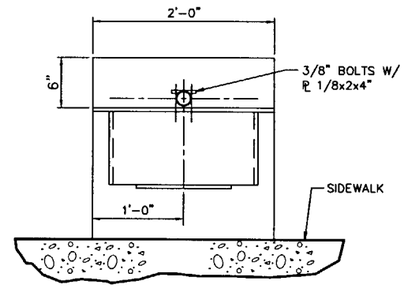

PLAN-POST MOUNT

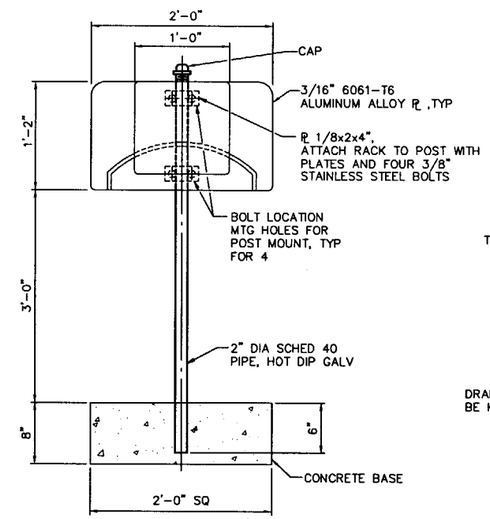

2 HOSE RACK

AS-203, P-203 — NTS

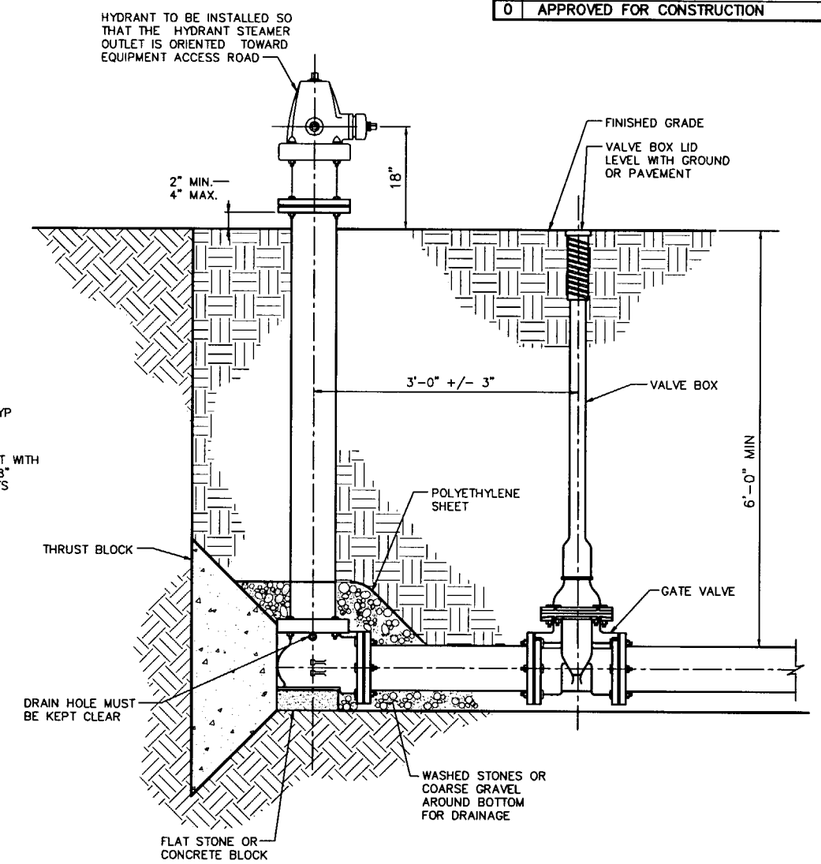

3 FIRE HYDRANT DETAIL

P-202, P-203 — NTS

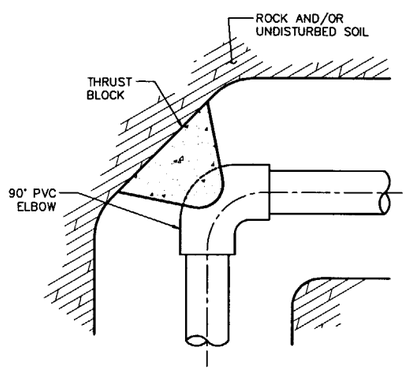

90° ELBOW

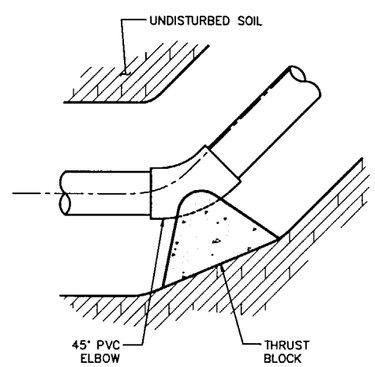

45° ELBOW

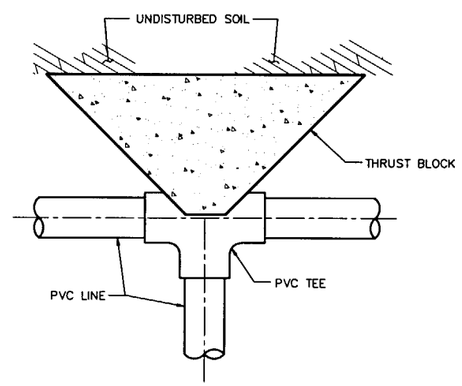

TEE

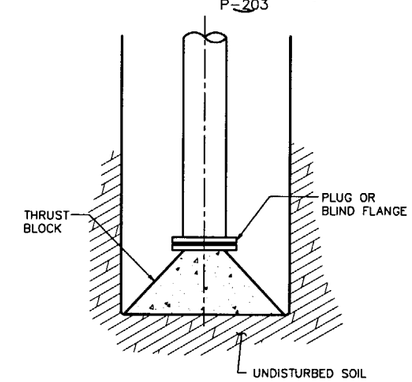

BLIND FLANGE

4 TYPICAL THRUST BLOCK DETAILS

P-202 — NTS

PROFESSIONAL ENGINEER REGISTERED 3755 STATE OF IDAHO LAWRENCE M. FETTKETHER 5/8/02

SUBCONTRACT NO.	S01-588058
REQUESTER:	
DESIGN:	BILL FARMER
DRAWN:	JOSHUA PRETS
PROJECT NO.	
SPEC CODE	
FOR REVIEW/APPROVAL SIGNATURES SEE DAR NO.	DAR
EFFECTIVE DATE:	

INEEL (Idaho National Engineering & Environmental Laboratory) BECHTEL BWXT IDAHO, LLC

CH2MHILL — MWH MONTGOMERY WATSON HARZA

INEEL CERCLA DISPOSAL FACILITY (ICDF)

PIPING DETAILS

SIZE	CAGE CODE	INDEX CODE NUMBER AREA	TYPE	Q	ORG	DWG-	REV
D		B21	0100	02			0

SCALE: AS SHOWN — CPP — SHEET P-208

REVISIONS		
REV	DESCRIPTION	EFFECTIVE DATE:
0	APPROVED FOR CONSTRUCTION	14 MAY 2002

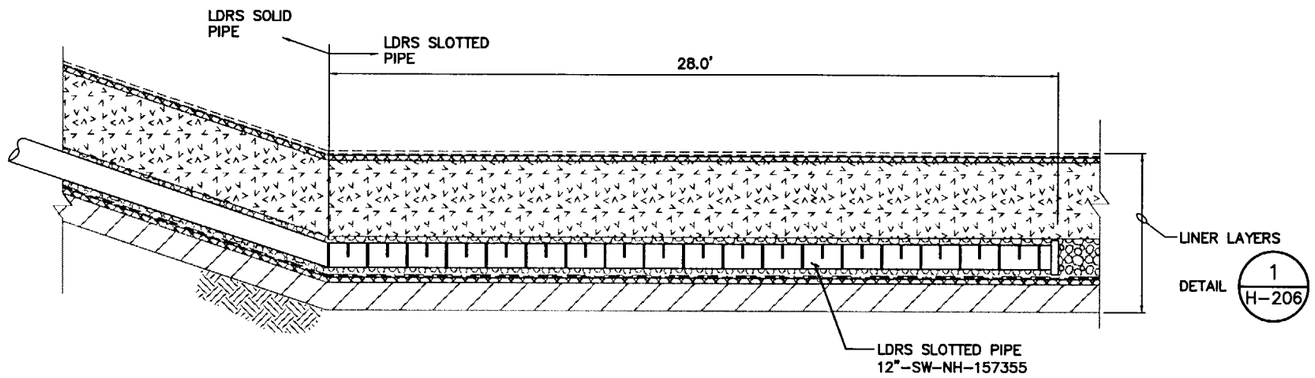

A / P-203 EVAPORATION POND LDRS PIPING AT SUMP
NTS

NOTE:
1. SEE 4 / P-207 FOR PUMP LOCATION AND PIPING, SIM.

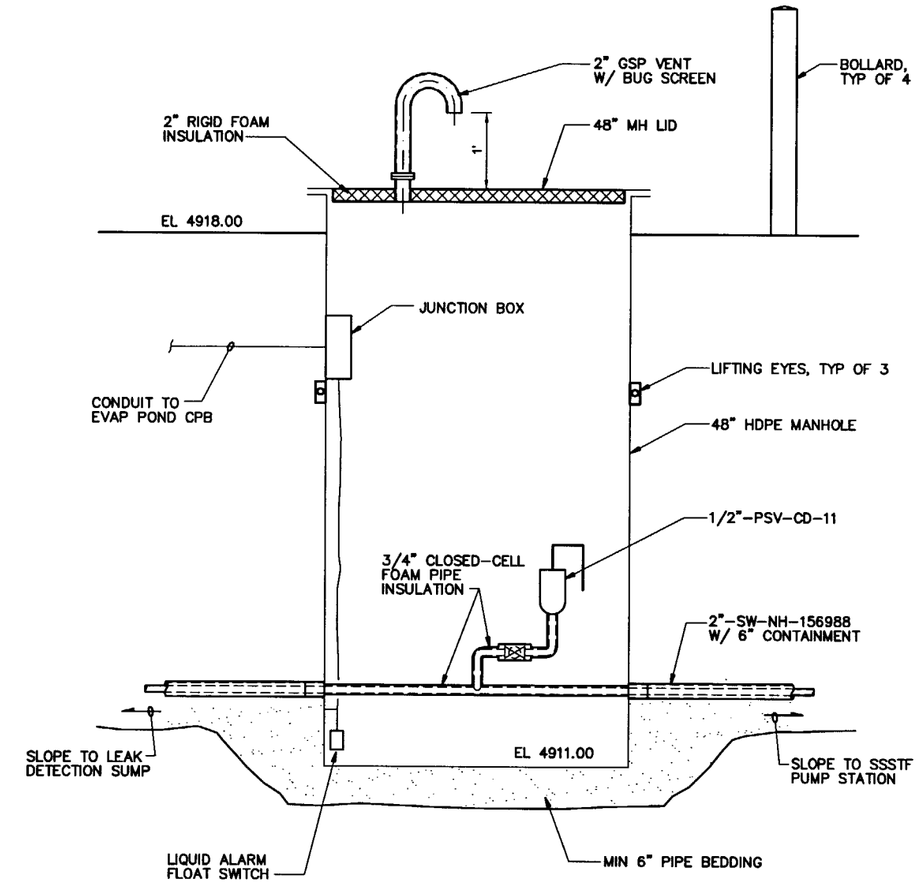

1 / P-201 P-202 AIR RELEASE STATION
NTS

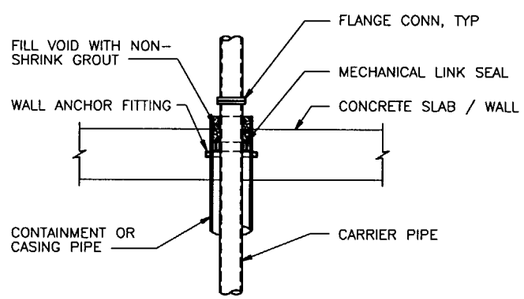

5 / P-205 P-206 P-210 CONCRETE PENETRATION DETAIL
1"=1'-0"

PROFESSIONAL ENGINEER REGISTERED 3755 STATE OF IDAHO LAWRENCE M. FETTKETHER 5/7/02

SUBCONTRACT NO.	S01-588058
REQUESTER:	
DESIGN:	BYRL THOMPSON
DRAWN:	JOSHUA PRETS
PROJECT NO.	
SPEC CODE	
FOR REVIEW/APPROVAL SIGNATURES SEE DAR NO.	DAR
EFFECTIVE DATE:	

INEEL Idaho National Engineering & Environmental Laboratory BECHTEL BWXT IDAHO, LLC

CH2MHILL MWH MONTGOMERY WATSON HARZA

INEEL CERCLA DISPOSAL FACILITY (ICDF)

LEACHATE COLLECTION SYSTEM DETAILS

SIZE	CAGE CODE	INDEX CODE NUMBER AREA	TYPE	CL	ORG	DWG-	REV
D		B21	0100	02			0

SCALE: AS SHOWN CPP SHEET P-209

REVISIONS		
REV	DESCRIPTION	EFFECTIVE DATE:
0	APPROVED FOR CONSTRUCTION	14 MAY 2002

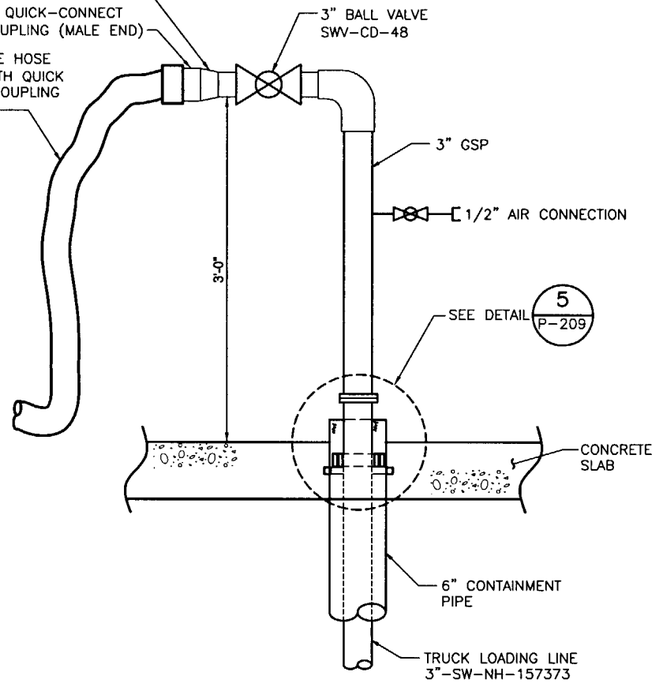

1 P-203 AS-203 TRUCK LOADING CONNECTION DETAIL
NTS

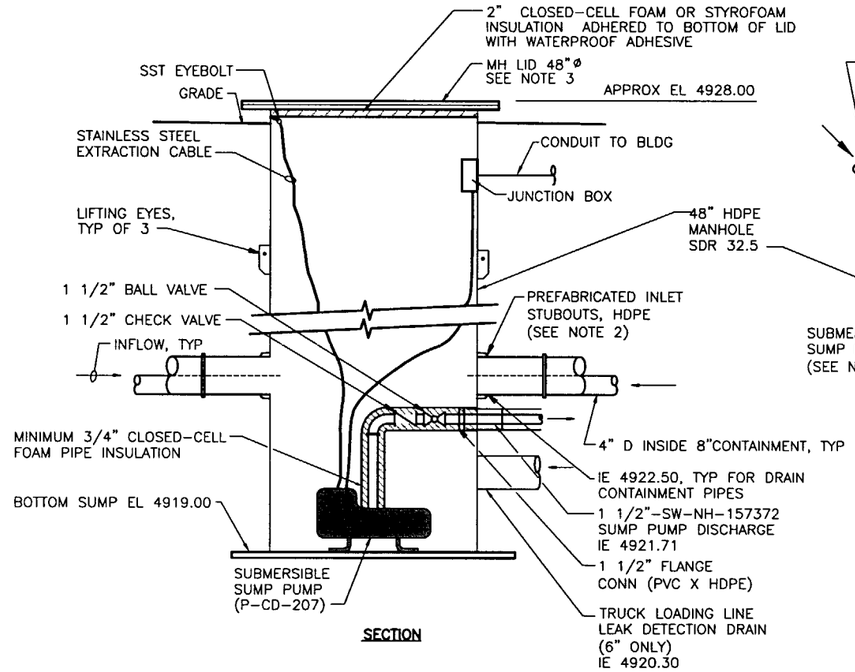

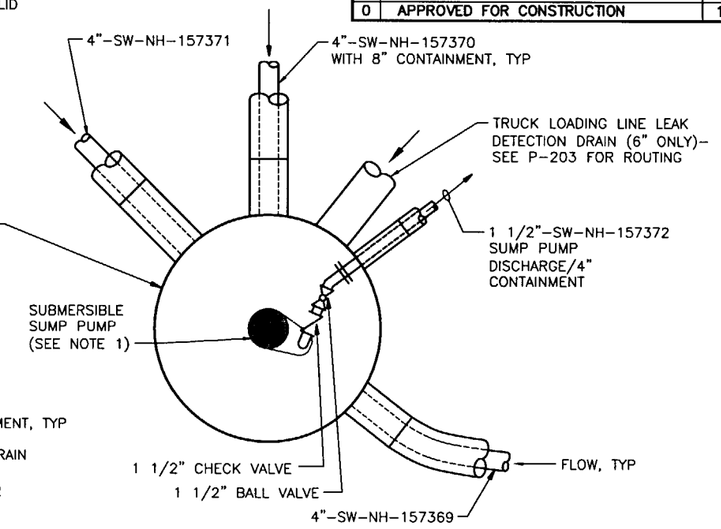

3 P-203 COMBINED SUMP MANHOLE (SU-CD-107)
NTS

NOTES:

COMBINED SUMP MANHOLE

1. PROVIDE 1 HP SUBMERSIBLE SUMP PUMP RATED FOR 50 GPM AT 30 FT TDH. INCLUDE EXPLOSION-PROOF MOTOR AND INTRINSICALLY SAFE COMPONENTS AND WIRING; INTEGRAL FLOAT SWITCH FOR AUTOMATIC START/STOP; HAND/OFF/AUTO CONTROL SWITCH MOUNTED INSIDE BLDG.
2. PROVIDE 3 – 8" AND 1 – 6" INLET CONNECTIONS WITH ORIENTATIONS SHOWN IN PLAN VIEW. PROVIDE 1 – 4" OUTLET CONNECTION WITH ORIENTATION SHOWN IN PLAN VIEW.
3. INSTALL 4 BOLLARDS AROUND MANHOLE LID.

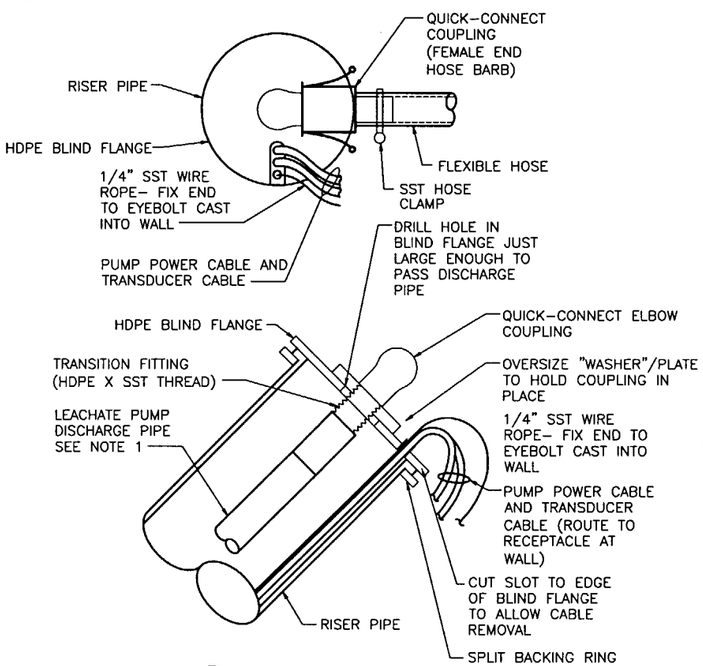

2 P-205 P-206 RISER CONNECTION DETAIL
NTS

NOTES:

1. PROVIDE ONLY SST NIPPLE THROUGH BLIND FLANGE FOR CONNECTIONS OTHER THAN FOR PUMPS (IE, SUMP PUMP DISCHARGE AND LEACHATE RECIRCULATION LINE) AT LANDFILL CPB. PROVIDE SST NIPPLE WITH MALE QUICK-CONNECT COUPLING END THROUGH BLIND FLANGE FOR LEACHATE FORCE MAIN DISCHARGE CONNECTIONS AT EVAP POND CPB.
2. TYPICAL RISER CONNECTIONS FROM PUMP DISCHARGE PIPE TO BLDG PIPING SHALL CONSIST OF QUICK-CONNECT COUPLINGS (FIBER GLASS-FILLED POLYPROPYLENE CONSTRUCTION WITH STAINLESS STEEL RINGS, ARMS & PINS) AND FLEXIBLE HOSE (11906 ROYALFLEX; VINYL NITRILE; BY BOSTON INDUSTRIAL PRODUCTS, OR EQUAL).
3. PROVIDE SNATCH BLOCK FOR FACILITATING RAISING AND LOWERING PUMP ASSEMBLY WITH WINCH. PROVIDE MCKISSICK SNATCH BLOCK "LIGHT CHAMPION" (CROSBY STOCK NO. 109091), OR EQUAL, WITH 3-INCH SHEAVE DIAMETER, SWIVEL HARDWARE, AND SHACKLE RATED FOR 2 METRIC TONS. FABRICATE ANGLE STEEL BRACKET FOR ATTACHING PULLEY SHACKLE TO PIPE FLANGE (WELD L-ANGLE STEEL PERPENDICULAR TO STEEL PIPE FLANGE WITH HOLE TO ACCEPT SHACKLE; BOLT STEEL FLANGE TO BACKING RING).

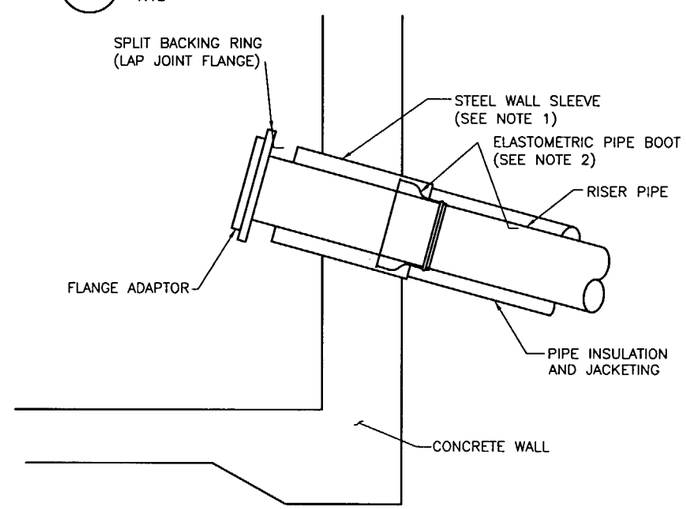

4 P-205 P-206 RISER WALL PENETRATION DETAIL
NTS

NOTES:

1. PROVIDE STEEL PIPE WALL SLEEVE CAST-IN-PLACE. PREPARE SURFACE TO SP10 PRIOR TO COATING WITH 1 COAT EPOXY PRIMER (2.5 MILS DRY FILM THICKNESS (MDFT)) AND 1 COAT POLYURETHANE ENAMEL (3 MDFT). SIZE WALL SLEEVE TO ALLOW PASSAGE OF FLANGE ADAPTER FITTING.
2. PROVIDE FLEXIBLE PIPE-TO-MANHOLE CONNECTOR, KOR-N-SEAL AS MANUFACTURED BY NPC, INC., MILFORD, NH.

PROFESSIONAL ENGINEER REGISTERED 3755 STATE OF IDAHO LAWRENCE M. FETTKETHER 5/8/02

SUBCONTRACT NO.	S01-588058
REQUESTER:	
DESIGN:	BILL FARMER
DRAWN:	JOSHUA PRETS
PROJECT NO.	
SPEC CODE	
FOR REVIEW/APPROVAL SIGNATURES SEE DAR NO.	DAR
EFFECTIVE DATE:	

INEEL Idaho National Engineering & Environmental Laboratory BECHTEL BWXT IDAHO, LLC

CH2MHILL MWH MONTGOMERY WATSON HARZA

INEEL CERCLA DISPOSAL FACILITY (ICDF)

LEACHATE COLLECTION SYSTEM DETAILS

SIZE	CAGE CODE	INDEX CODE NUMBER AREA	TYPE	CL	ORG	DWG-	REV
D		B21	0100	02			0

SCALE: AS SHOWN CPP SHEET P-210

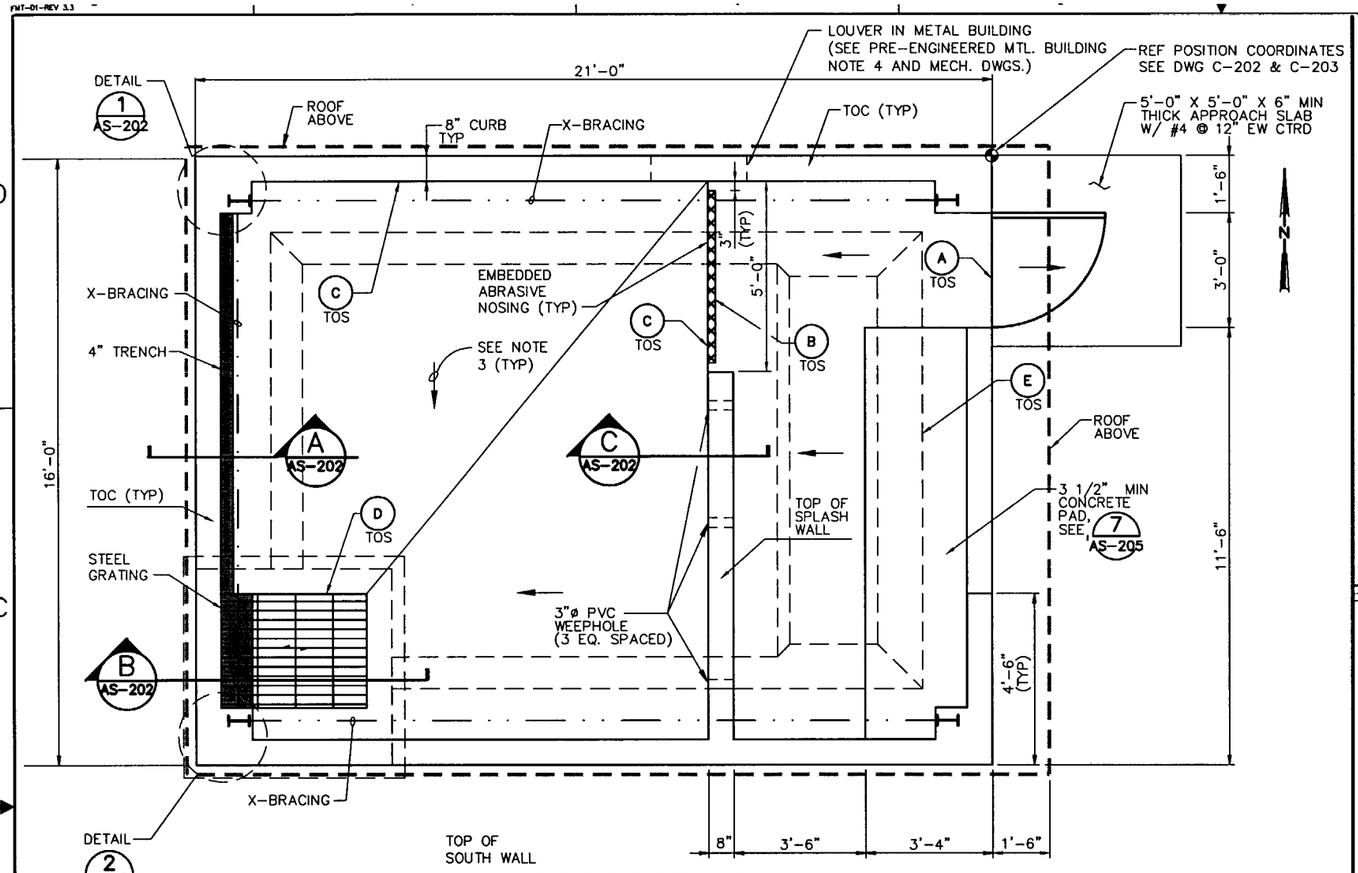

FOUNDATION PLAN

1/2" = 1'-0"

0 1 2 3
1/2" = 1'-0"

REV	DESCRIPTION	EFFECTIVE DATE:
0	APPROVED FOR CONSTRUCTION	14 MAY 2002

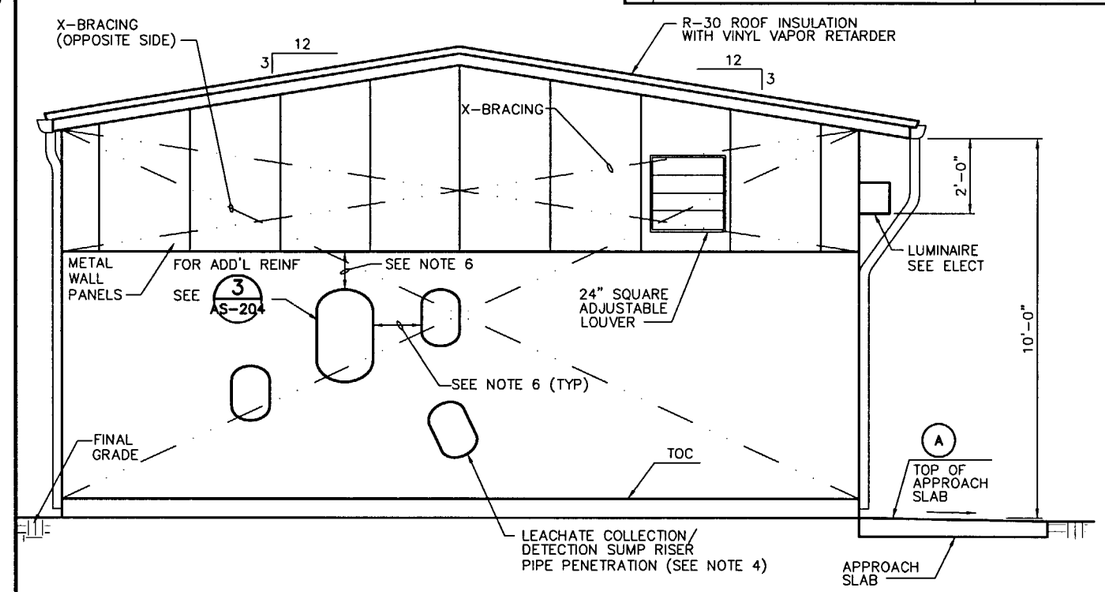

SOUTH ELEVATION

1/2" = 1'-0"

0 1 2 3
1/2" = 1'-0"

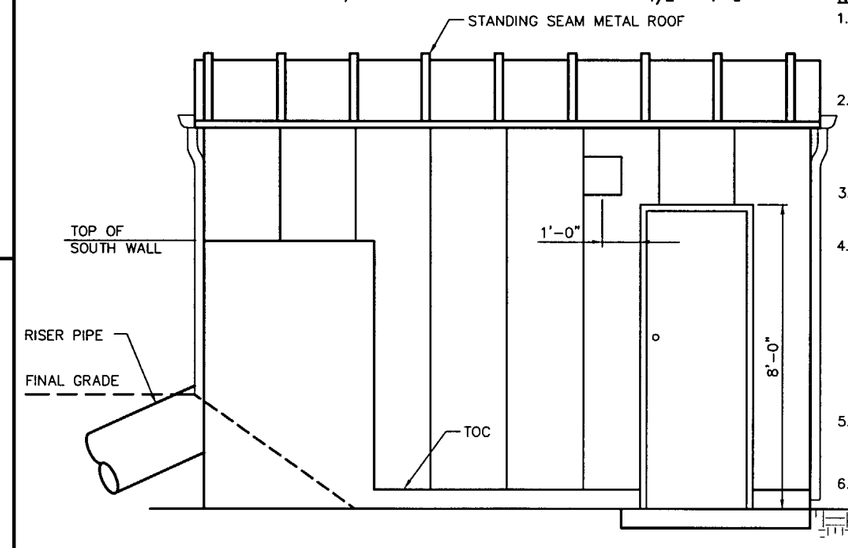

EAST ELEVATION

1/2" = 1'-0"

0 1 2 3
1/2" = 1'-0"

NOTES:

1. FOR REINFORCING STEEL NOTES, SEE 1 AS-204
2. FOR ADDITIONAL REINFORCING REQUIRED AROUND OPENINGS, SEE 3 AS-204
3. MINIMUM SURFACE SLOPE: 1/8":12"
4. RISER PIPE PENETRATION LOCATIONS ARE SHOWN FOR LANDFILL CREST PAD BUILDING. SEE P-205 FOR DETAIL. REFER TO P-206 FOR EVAPORATION POND BUILDING RISER PIPE LOCATIONS. SEE DETAIL 4 P-210 FOR PIPE SLEEVE EMBEDS.
5. PROVIDE EXTERIOR BUILDING LETTERS AS SPECIFIED IN SECTION 10440.
6. MINIMUM DIST = 1 x (PIPE DIAM.)

CREST PAD BUILDING ELEVATIONS

NAME	LANDFILL POND	EVAP. POND
FINAL GRADE	4929'-0"	4928'-0"
Ⓐ	4929'-1"	4928'-1"
Ⓑ	4929'-0"	4928'-0"
Ⓒ	4928'-6"	4927'-6"
Ⓓ	4928'-4"	4927'-4"
Ⓔ	4929'-4 1/2"	4928'-4 1/2"
TOP OF CURB (TOC)	4929'-7"	4928'-7"
TOP OF SPLASH WALL	4936'-1"	4935'-1"
TOP OF SOUTH WALL	4936'-1"	4931'-1"

ABBREVIATIONS:

TOS = TOP OF SLAB
TOC = TOP OF CURB

GENERAL STRUCTURAL NOTES:

DESIGN CODES:

1997 UNIFORM BUILDING CODE
DOE-ID ARCHITECTURAL & ENGINEERING STANDARD, LATEST VERSION

DESIGN LOADS:

1. ROOF SNOW LOAD ..... 30 PSF
2. ROOF LIVE LOAD ..... 20 PSF
3. COLLATERAL LOADS ..... 10 PSF
4. WIND ..... 70 MPH BASIC SPEED
   EXPOSURE C, I=1.15
5. SEISMIC ..... ZONE 3, I=1.25
   PERFORMANCE CATEGORY PC-1, AS STATED IN DOE-ID ARCHITECTURAL & ENGINEERING STANDARD

FOUNDATIONS: ..... 8000 PSF
ALLOWABLE BEARING PRESURE

MATERIALS

A. CONCRETE STRENGTH: MIN 4000 PSI COMPRESSIVE (CLASS 40) @ 28 DAYS
B. REINFORCING STEEL: ASTM 615, GRADE 60
C. ANCHOR BOLTS: DESIGNED BY BID MANUFACTURER

PRE-ENGINEERED METAL BUILDING

1. VERIFY ALL DIMENSIONS PRIOR TO PLACING CONCRETE.
2. MINIMIUM PLAN DIMENSIONS OF BUILDING SHOWN. MINOR ADJUSTMENTS MAY BE REQUIRED BY THE TYPE OF BUILDING SUPPLIED BY CONTRACTOR.
3. WIDTH OF CURB MAY VARY, VERIFY ACTUAL WIDTH WITH BUILDING SUPPLIER.
4. HVAC UNIT TO BE SUPPORTED BY METAL BUILDING WALL. COORDINATE SIZE, LOCATIONS AND OPENINGS (LOUVERS) WITH BUILDING VENDOR.

REGISTERED PROFESSIONAL ENGINEER STATE OF IDAHO KENT B SOELBERG 5-8-02

SUBCONTRACT NO.	S01-588058
REVISER:	
DESIGN:	S. DESPRADEL
DRAWN:	JOSHUA PRETS
PROJECT NO.	
SPEC CODE	
FOR REVIEW/APPROVAL SIGNATURES SEE DIR NO.	DAR
EFFECTIVE DATE:	

INEEL (Idaho National Engineering & Environmental Laboratory) BECHTEL BWXT IDAHO, LLC

CH2MHILL MWH MONTGOMERY WATSON HARZA

INEEL CERCLA DISPOSAL FACILITY (ICDF)

CREST PAD BUILDING
PLAN AND ELEVATIONS

SIZE	CAGE CODE	INDEX CODE NUMBER AREA	TYPE	CL	ORIG	DWG-	REV
D		B21	0100	02			0

SCALE: AS SHOWN CPP SHEET AS-201

REVISIONS		
REV	DESCRIPTION	EFFECTIVE DATE:
0	APPROVED FOR CONSTRUCTION	14 MAY 2002

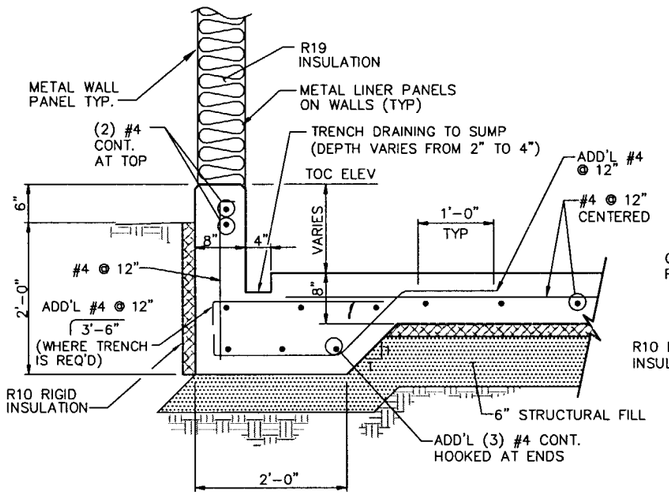

A AS-201 SECTION
1"=1'-0"
Scale In Feet

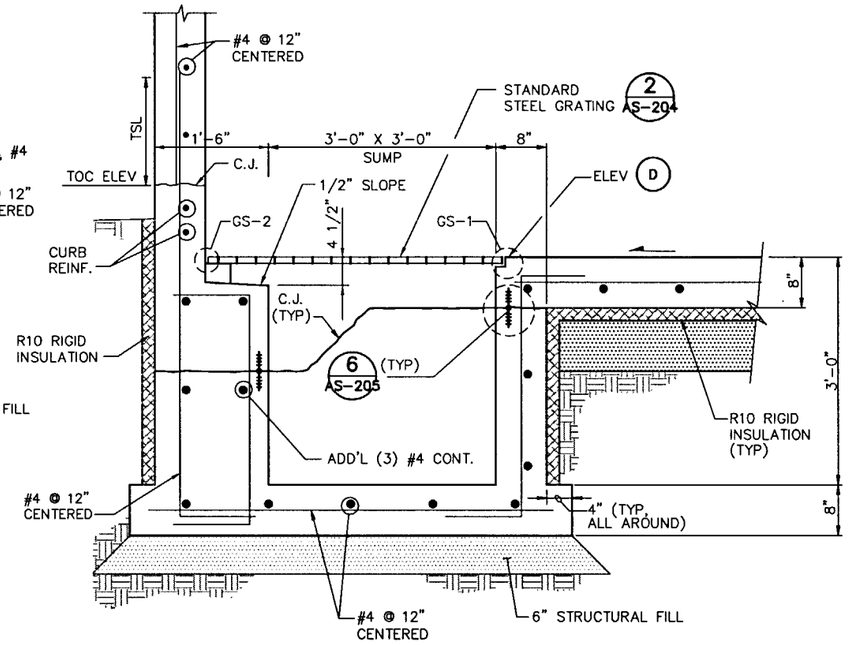

B AS-201 SECTION
1"=1'-0"
Scale In Feet

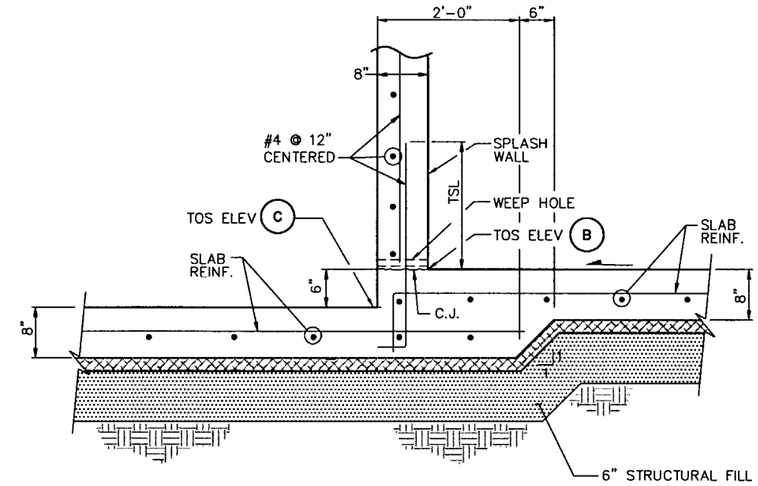

C AS-201 SECTION
1"=1'-0"
Scale In Feet

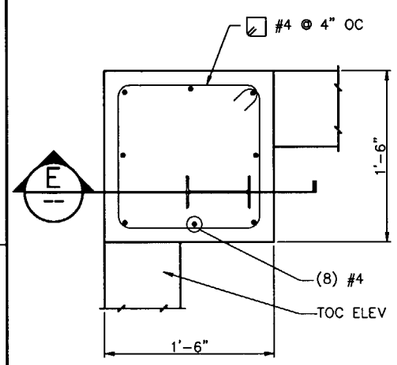

1 AS-201 DETAIL
1 1/2"=1'-0"

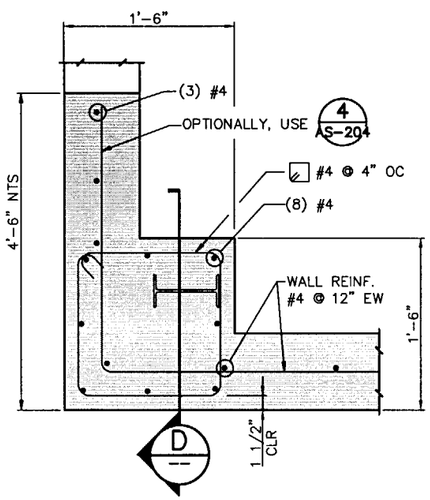

2 AS-201 DETAIL
1 1/2"=1'-0"

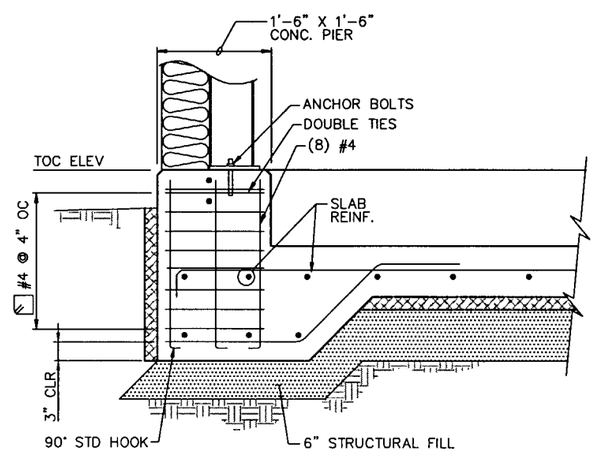

NOTE:
FOR ADD'L INFORMATION SEE SECTION A

E SECTION
1"=1'-0"
Scale In Feet

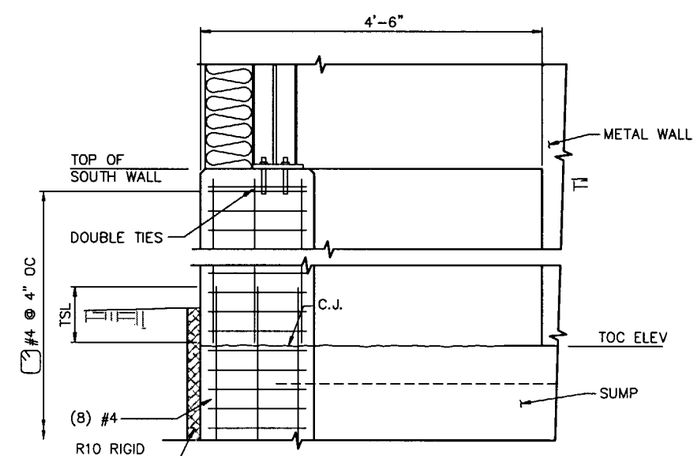

D SECTION
1"=1'-0"
Scale In Feet

NOTE:
FOR TENSION SLPLICE LENGTH (TSL) SEE 4 AS-204

INEEL Idaho National Engineering & Environmental Laboratory BECHTEL BWXT IDAHO, LLC

CH2MHILL MWH MONTGOMERY WATSON HARZA

INEEL CERCLA DISPOSAL FACILITY (ICDF)

CREST PAD BUILDING SECTIONS AND DETAILS

REGISTERED PROFESSIONAL ENGINEER STATE OF IDAHO KENT B SOELBERG 5-8-02

SUBCONTRACT NO.	S01-588058
PROJECTER:	
DESIGN:	S. DESPRADEL
DRAWN:	JOSH PRETS
PROJECT NO.	
SPEC CODE	
FOR REVIEW/APPROVAL SIGNATURES SEE DAR NO.	DAR
EFFECTIVE DATE:	

SIZE	CAGE CODE	INDEX CODE NUMBER AREA	TYPE	CL	ORIG	DWG-	REV
D		B21	0100	02			0

SCALE: AS SHOWN CPP SHEET AS-202

REVISIONS		
REV	DESCRIPTION	EFFECTIVE DATE:
0	APPROVED FOR CONSTRUCTION	14 MAY 2002

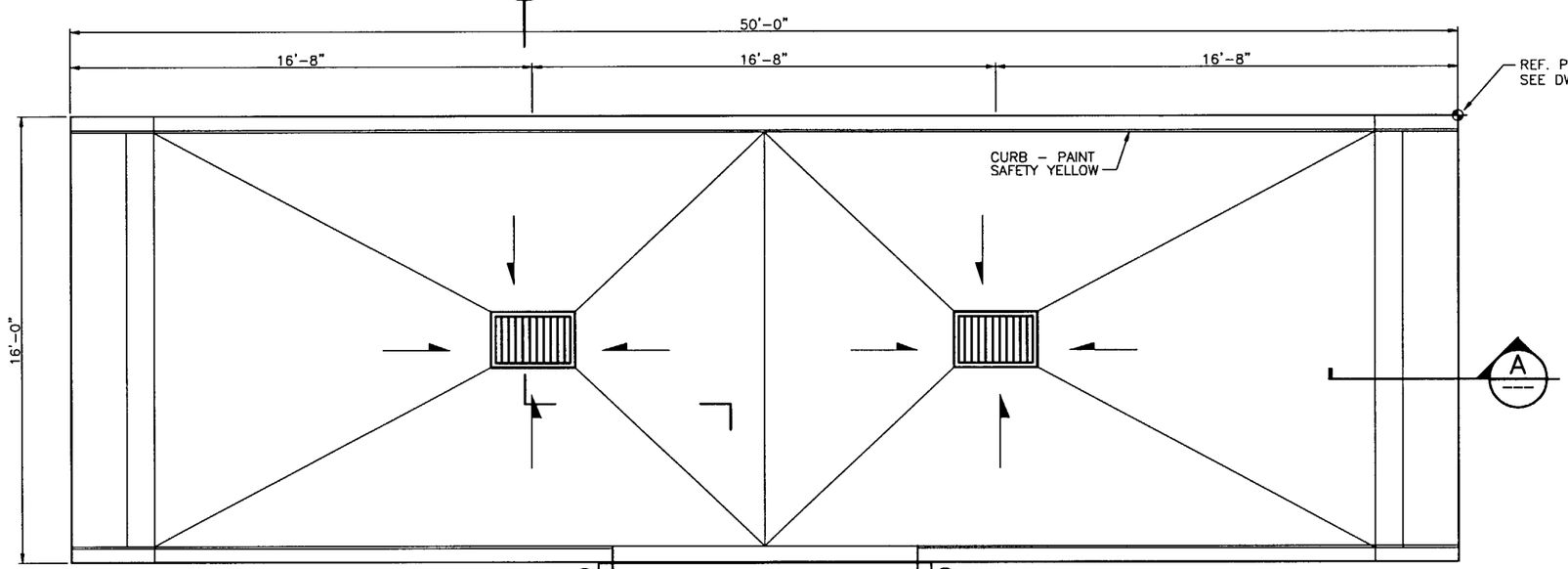

NOTES:

LOADS:

TRAFFIC LOAD: HS15-44 (AASHTO STANDARD CODE)

MATERIALS:

A. CONCRETE STRENGTH: MIN 4500 PSI COMPRESSIVE (CLASS 45) @ 28 DAYS
B. REINFORCING STEEL: ASTM 615, GRADE 60
C. PREMOLDED JOINT FILLER (PJF) SHALL BE BITUMINOUS TYPE (ASTM D994 OR D1751)

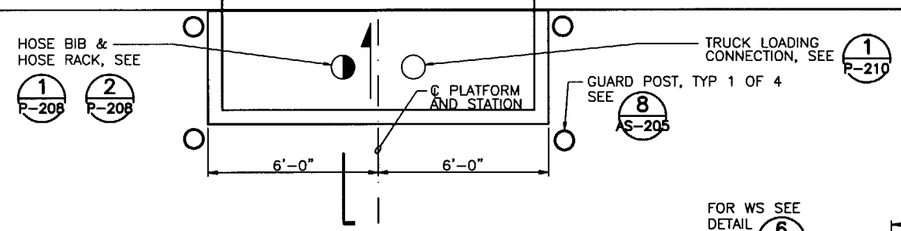

TRUCK LOADING STATION FOUNDATION

3/8" = 1'-0"

0 2 4 6
Scale In Feet

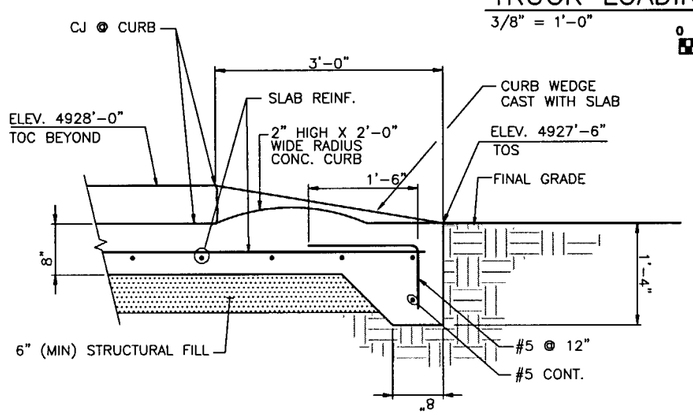

A SECTION

1/2"=1'-0"

0 1 2 3
Scale In Feet

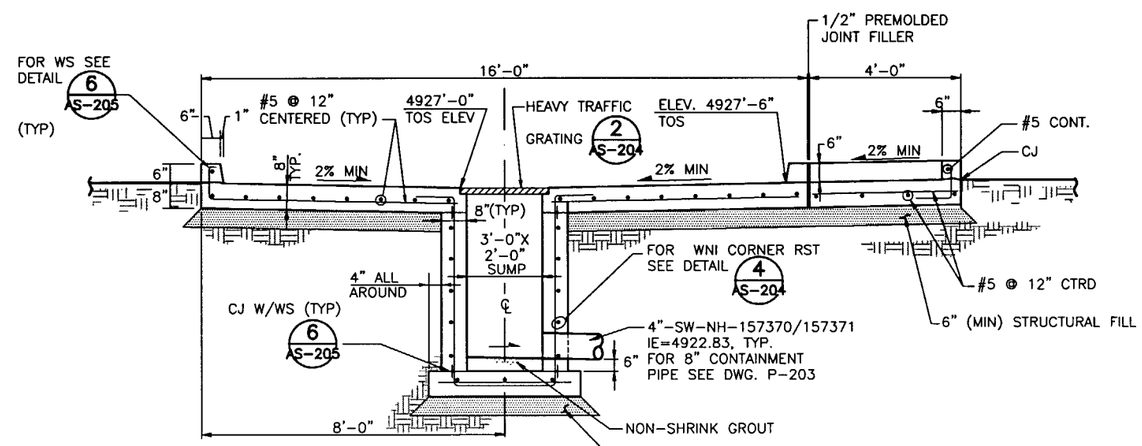

B SECTION

1/2"=1'-0"

0 1 2 3
Scale In Feet

REGISTERED PROFESSIONAL ENGINEER STATE OF IDAHO KENT B SOELBERG 5-8-02

SUBCONTRACT NO.	S01-588058
REQUESTER:	
DESIGN:	S. DESPRADEL
DRAWN:	JOSH PRETS
PROJECT NO.	
SPEC CODE	
FOR REVIEW/APPROVAL SIGNATURES SEE DAR NO.	DAR
EFFECTIVE DATE:	

INEEL — Idaho National Engineering & Environmental Laboratory — BECHTEL BWXT IDAHO, LLC

CH2MHILL — MWH MONTGOMERY WATSON HARZA

INEEL CERCLA DISPOSAL FACILITY (ICDF)

TRUCK LOADING PLAN
SECTIONS AND DETAILS

SIZE	CAGE CODE	INDEX CODE NUMBER AREA	TYPE	CL	ORIG	DWG-	REV
D		B21	0100	02			0

SCALE: AS SHOWN — CPP — SHEET AS-203

REVISIONS		
REV	DESCRIPTION	EFFECTIVE DATE:
0	APPROVED FOR CONSTRUCTION	14 MAY 2002

REINFORCING STEEL:

1. THE MINIMUM REINFORCING FOR ALL CONCRETE WALLS AND SLABS SHALL BE AS FOLLOWS:

WALL THICKNESS	REINF EACH WAY	LOCATION
6"	#4@12"	CENTERED
8"	#5@12"	CENTERED
10"	#4@12"	EACH FACE
12"	#5@12"	EACH FACE

PROVIDE LARGER SIZES AND MORE REINFORCING IN ALL SECTIONS OF CONCRETE WHERE REQUIRED BY THE DETAILS ON THE DRAWINGS OR BY THE SPECIFICATIONS.

2. CLEARANCE FOR REINFORCEMENT BARS, UNLESS SHOWN OTHERWISE, SHALL BE:
   - WHEN PLACED ON GROUND: ——— 3"
   - ALL OTHER CONCRETE SURFACES:
     - #5 BAR OR SMALLER ——— 1 1/2"
     - #6 BAR OR LARGER ——— 2"
3. REFER TO WALL CORNER AND WALL INTERSECTION REINFORCING DETAIL. IN GENERAL, THE WALL CORNER REINFORCING SIZES AND SPACINGS SHALL BE CALLED OUT ON THE PLANS AND REFERENCED TO THESE DETAILS AND THE TYPICAL HORIZONTAL WALL REINFORCING SHALL LAP WITH THE HORIZONTAL REINFORCING.
4. ALL BENDS, UNLESS OTHERWISE SHOWN, SHALL BE A 90 DEGREE STANDARD HOOK AS DEFINED IN LATEST EDITION OF ACI 318.
5. ALL WALL CORNER AND WALL INTERSECTION REINFORCEMENT BARS SHALL BE CONTINUOUS AROUND CORNERS AND THROUGH COLUMNS OR PILASTERS. REINFORCEMENT SHALL BE EXTENDED INTO CONNECTING WALLS AND LAPPED ON THE OPPOSITE FACE OF THE CONNECTING WALLS, AS INDICATED ELSEWHERE ON THIS SHEET.
6. VERTICAL WALL BARS SHALL BE LAPPED WITH DOWELS FROM BASE SLABS AND EXTENDED INTO THE TOP FACE OF ROOF SLABS AND LAPPED WITH TOP SLAB REINFORCEMENT. PROVIDE A MINIMUM OF TWO FULL HEIGHT VERTICAL BARS WITH MATCHING DOWELS AT WALL ENDS, CORNERS AND INTERSECTIONS WITH SIZE TO MATCH TYPICAL VERTICAL REINFORCING STEEL SHOWN OR REQUIRED BY NOTES ABOVE.
7. UNLESS INDICATED OTHERWISE, CONTRACTOR MAY SPLICE CONTINUOUS SLAB OR LONGITUDINAL BEAM BARS AT LOCATIONS OF HIS CHOOSING, EXCEPT THAT TOP BAR SPLICES SHALL BE LOCATED AT MIDSPAN AND BOTTOM BAR SPLICES HALL BE LOCATED AT SUPPORTS. ALL REINFORCEMENT BENDS AND LAPS, UNLESS OTHERWISE NOTED, SHALL SATISFY THE FOLLOWING MINIMUM REQUIREMENT:

CONCRETE DESIGN STRENGTH = 4,000 PSI						GRADE 60 REINFORCING STEEL				
BAR SIZE		#3	#4	#5	#6	#7	#8	#9	#10	#11
LAP SPLICE LENGTH										
SPACING<6"	TOP BAR*	1'-4"	2'-0"	3'-0"	4'-0"	5'-10"	6'-8"	7'-6"	8'-4"	9'-2"
	OTHER BAR	1'-4"	1'-7"	2'-3"	3'-1"	4'-6"	5'-2"	5'-10"	6'-5"	7'-1"
SPACING>6"	TOP BAR*	1'-4"	1'-7"	2'-0"	2'-5"	3'-6"	4'-0"	5'-0"	6'-0"	7'-1"
	OTHER BAR	1'-4"	1'-4"	1'-7"	1'-10"	2'-9"	3'-1"	3'-10"	4'-7"	5'-5"
EMBEDMENT LENGTH										
SPACING<6"	TOP BAR*	1'-0"	1'-7"	2'-3"	3'-1"	4'-6"	5'-2"	5'-10"	6'-5"	7'-1"
	OTHER BAR	1'-0"	1'-2"	1'-9"	2'-5"	3'-6"	4'-0"	4'-6"	5'-0"	5'-5"
SPACING>6"	TOP BAR*	1'-0"	1'-3"	1'-7"	1'-10"	2'-9"	3'-1"	3'-10"	4'-7"	5'-5"
	OTHER BAR	1'-0"	1'-0"	1'-2"	1'-5"	2'-1"	2'-5"	2'-11"	3'-7"	4'-2"

* TOP BARS SHALL BE DEFINED AS ANY HORIZONTAL BARS PLACED SUCH THAT MORE THAN 12" OF FRESH CONCRETE IS CAST IN THE MEMBER BELOW THE BAR IN ANY SINGLE POUR. HORIZONTAL WALL BARS ARE CONSIDERED TOP BARS.

8. CONTINUOUS WATERSTOP, AS SPECIFIED, SHALL BE INSTALLED IN ALL CONSTRUCTION JOINTS IN WALLS OF WATER HOLDING BASINS AND CHANNELS, EXCEPT WHERE INDICATED OTHERWISE.
9. PROVIDE AND INSTALL SELECT GRANULAR MATERIAL AS SPECIFIED UNDER ALL SLABS AND FOOTINGS TO UNDISTURBED EARTH WITH MINIMUM THICKNESS EQUAL TO 6", UNLESS OTHERWISE NOTED.

1 STRUCTURAL NOTES
NTS

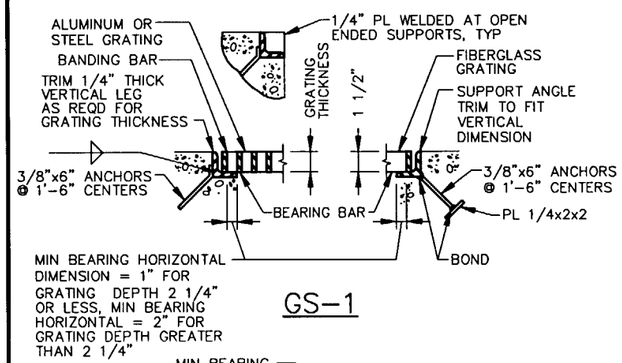

GS-1

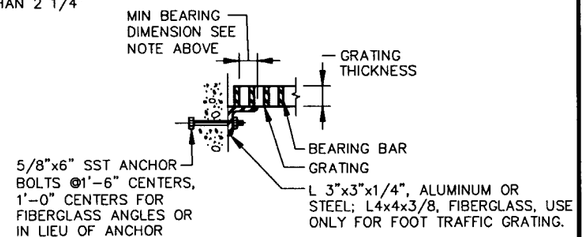

GS-2

VEHICULAR TRAFFIC NOTE:

STEEL GRATING BEARING BARS FOR VEHICULAR TRAFFIC SHALL BE SPACED AT 1 7/8" OC; ALUMINUM GRATING BEARING BARS FOR VEHICULAR TRAFFIC SHALL BE SPACED AT 1 3/16" OC.

GENERAL NOTES:

1. EXTEND GRATING CONTINUOUSLY OVER GATE GUIDES AND GATES.
2. NOTCH GRATING SUPPORTS AT GATES AS REQUIRED.
3. GRATING SPAN ←→ SEE PLAN.
4. WIDTH OF GRATING SECTIONS SHALL NOT EXCEED 3'-0".
5. SHOP DRAWINGS BASED ON FIELD DIMENSIONS SHALL BE SUBMITTED TO THE ENGINEER PRIOR TO FABRICATION.
6. MATERIAL FOR SUPPORTS OF STEEL AND ALUMINUM GRATING TO BE SAME AS GRATING, EXCEPT METAL SUPPORTS THAT ARE TO BE EMBEDDED IN CONCRETE SHALL BE TYPE 316 STAINLESS STEEL.
7. UNLESS NOTED OTHERWISE ON PLANS, GRATING THICKNESS SHALL BE AS TABULATED IN "GRATING THICKNESS TABLE" FOR APPLICABLE TRAFFIC.
8. BEARING BAR THICKNESS FOR GRATING TO BE 3/16" MINIMUM.
9. BAND ALL EDGES WITH 3/16 x DEPTH OF BEARING BAR.
10. PROVIDE MISCELLANEOUS GRATING FASTENERS AS REQUIRED.
11. TYPE OF MATERIAL USED SHALL BE AS SHOWN ON PLANS OR AS SPECIFIED. THIS STANDARD DETAIL INCLUDES 3 TYPES, ALTHOUGH ALL 3 MAY NOT BE INCLUDED IN PROJECT.
12. THE HORIZONTAL CLEARANCE BETWEEN THE GRATING AND GRATING SUPPORTS SHALL NOT BE LESS THAN 1/4" NOR GREATER THAN 1/2" AND AS SPECIFIED.
13. ALL GRATING SECTIONS, WHEN IN PLACE, SHALL ALWAYS BE FIRMLY ANCHORED TO THEIR SUPPORTS AS SPECIFIED.

FOOT TRAFFIC GRATING THICKNESS TABLE			
MAXIMUM SPAN	ALUMINUM	STEEL	FIBERGLASS
3'-6"	1 1/4"	1"	1 1/2"

HEAVY TRAFFIC (HS 20-44)		
MAXIMUM SPAN	STEEL	ALUMINUM
1'-0"	2"x3/16"	DO NOT USE ALUMINUM GRATING
1'-8"	2 1/2"x1/4"	
2'-0"	2 1/2"x3/8" OR 3"x1/4"	
2'-6"	3"x3/8" OR 4"x1/4"	
3'-3"	3 1/2"x3/8"	
4'-0"	4"x3/8"	
5'-0"	4 1/2"x3/8"	

2 STANDARD GRATING
NTS

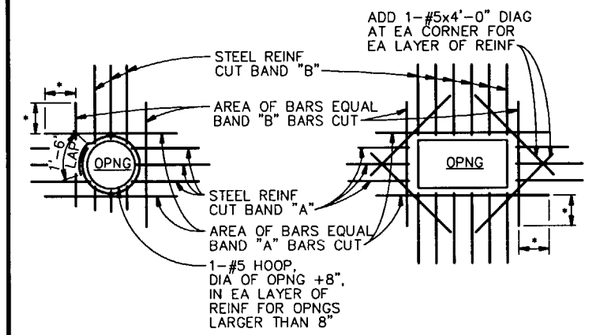

NOTES:

1. * PROVIDE MINIMUM LAP, SEE 1/AS-204
2. TYPICAL FOR ALL OPENINGS IN CONCRETE WALLS AND SLABS UNLESS INDICATED OTHERWISE ON PLANS.
3. DO NOT WELD REINFORCEMENT TO PIPE SLEEVES AND INSERTS.
4. PROVIDE A MINIMUM OF 2 "A" BARS AND 2 "B" BARS EACH SIDE OF OPENING (1 EACH FACE).
5. FOR OPENINGS LARGER THAN 8'-0", REINFORCE SAME AS FOR 8'-0" OPENINGS.
6. SPACE AT 3 BAR DIAMETERS (OR 3" MINIMUM) ON CENTER.

3 OPENING REINFORCING
NTS

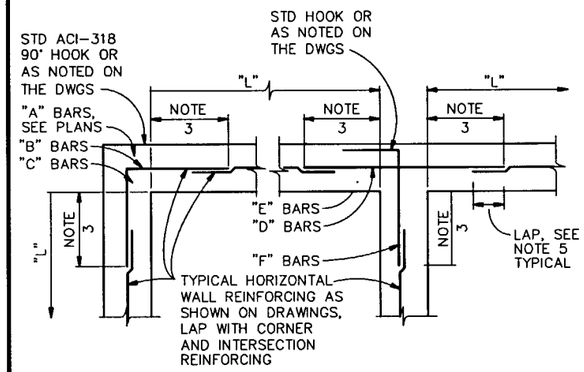

NOTES:

1. TYPICAL HORIZONTAL WALL CORNER AND INTERSECTION REINFORCING LAYOUT IS SHOWN TO AVOID CONGESTION AND PERMIT PROPER PLACEMENT, FOR SIZE AND SPACING SEE PLANS. ALL HORIZONTAL REINFORCING AT CORNERS AND INTERSECTIONS SHALL BE FABRICATED AND INSTALLED WITH SPLICES LOCATED WHERE SHOWN REGARDLESS OF BAR SIZE AND SPACING.
2. WHERE THE CORNER OR INTERSECTION REINFORCING SIZE AND SPACING IS NOT SHOWN, NOTED OR TABULATED ON THE PLANS, THE SIZE AND SPACING SHALL BE THE SAME AS THE WALL HORIZONTAL REINFORCING SHOWN ON THE WALL SECTIONS OR AS NOTED FOR THE REINFORCING BETWEEN THE CORNERS OR INTERSECTIONS.
3. EXCEPT WHERE OTHERWISE SHOWN ON THE DRAWINGS, THE LENGTH INDICATED AS "NOTE 3" SHALL BE THE LESSER OF L/4, 10 FEET, OR 1.0 TIMES THE HEIGHT OF THE WALL, EXCEPT THAT IN NO CASE SHALL IT BE LESS THAN 2 FEET.
4. L = LENGTH OF WALL PARALLEL TO THE BAR LENGTH IN QUESTION.
5. EXCEPT WHERE OTHERWISE SHOWN ON THE DRAWINGS, THE LENGTH INDICATED AS "NOTE 5" SHALL BE EQUAL TO ONE "LAP LENGTH" AS REQUIRED BY THE GENERAL STRUCTURAL NOTES. USE THE LAP LENGTH AS REQUIRED FOR THE SMALLER OF THE TWO REINFORCING BARS BEING SPLICED.
6. UNLESS OTHERWISE NOTED, "B" AND "C" BARS ARE THE SAME SIZE AND SPACING AND "F" BARS ARE THE SAME SIZE AND SPACING.

4 TYPICAL WALL CORNER AND INTERSECTION REINFORCING
NTS

REGISTERED PROFESSIONAL ENGINEER STATE OF IDAHO KENT B SOELBERG 5-8-02

SUBCONTRACT NO.	S01-588058
RECORDER:	
DESIGN:	S. DESPRADEL
DRAWN:	JOSH PRETS
PROJECT NO.	
SPEC CODE	
FOR REVIEW/APPROVAL SIGNATURES SEE DAR NO.	DAR
EFFECTIVE DATE:	

INEEL Idaho National Engineering & Environmental Laboratory BECHTEL BWXT IDAHO, LLC

CH2MHILL MWH MONTGOMERY WATSON HARZA

INEEL CERCLA DISPOSAL FACILITY (ICDF)

STRUCTURAL NOTES AND DETAILS

SIZE	CAGE CODE	INDEX CODE NUMBER AREA	TYPE	CL	ORG	DWG-	REV
D		B21	0100	02			0

SCALE: AS SHOWN CPP SHEET AS-204

REVISIONS		
REV	DESCRIPTION	EFFECTIVE DATE:
0	APPROVED FOR CONSTRUCTION	14 MAY 2002

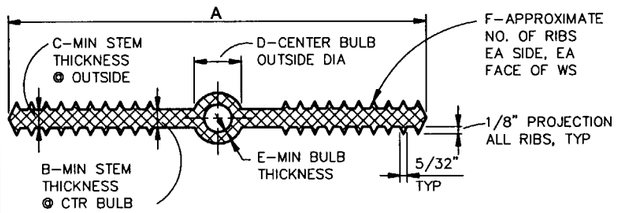

SIZE	A	B	C	D	E	F
6"x3/8"	6"	3/8"	3/8"	7/8"	1/4"	6

5 PLASTIC WATERSTOP
NTS

EQUIPMENT BASE NOTES

1. PAD SIZE SHALL BE MINIMUM INDICATED OR AS SHOWN ON THE PLANS OR AS INDICATED BY THE MANUFACTURER AND APPROVED BY THE ENGINEER.
2. THE SIZE, NUMBER, TYPE, LOCATION, AND THREAD PROJECTION OF THE ANCHOR BOLTS SHALL BE DETERMINED BY THE EQUIPMENT MANUFACTURER, AND SHALL BE AS APPROVED BY THE ENGINEER. ANCHOR BOLTS SHALL BE HELD IN POSITION WITH A ONE PIECE TEMPLATE, MATCHING THE BASE PLATE, WHILE PAD IS BEING POURED.
3. ANCHOR BOLT SLEEVES SHALL BE USED TO PROVIDE THE ANCHOR BOLT A MINIMUM MOVEMENT OF 1/2" IN ALL DIRECTIONS. THE MINIMUM SLEEVE LENGTH SHALL BE 8 TIMES THE BOLT DIAMETER. SLEEVES SHALL BE FILLED WITH NON–SHRINK GROUT.
4. ANCHOR BOLT SLEEVES SHALL HAVE A MINIMUM INTERNAL DIAMETER 1" GREATER THAN BOLT DIAMETER AND A MAXIMUM INTERNAL DIAMETER 3" GREATER THAN ANCHOR BOLT DIAMETER. SLEEVES SHALL BE FILLED WITH NON–SHRINK GROUT.
5. EQUIPMENT BASES SHALL BE INSTALLED LEVEL UNLESS SPECIFIED OTHERWISE.
6. WEDGES OR SHIMS SHALL BE USED TO SUPPORT THE BASE WHILE THE NON–SHRINK GROUT IS PLACED. TEMPORARY LEVELING NUTS SHALL BE BACKED OFF. IF LEFT IN, THE WEDGES OR SHIMS SHALL NOT BE EXPOSED TO VIEW.
7. HEIGHT OF PADS SHALL BE MINIMUM REQUIRED FOR ANCHOR BOLT CLEARANCE TO KEEP ANCHOR BOLT OUT OF SLAB (SEE TABLE BELOW). WHERE EQUIPMENT OR PIPING ELEVATION REQUIRE A PAD HEIGHT LESS THAN THE MINIMUM SHOWN, USE TYPE B WITH BLOCKOUT.

AB DIA * (IN.)	1/2	5/8	3/4	7/8	1	1 1/4
MIN PAD HT (IN.)	7	8 1/2	10	11	12 1/2	15
MIN EMBED (IN.)	4	4 1/2	5	6	7	9
EDGE DIST (IN.)	3	3 3/4	4 1/2	5 1/4	6	7 1/2
SPACING (IN.)	6	7 1/2	9	10 1/2	12	15
TENSION ** (LBS)	950	1500	2250	2550	3250	4000
SHEAR ** (LBS)	1250	2750	3560	4050	4500	5800

* ASSUME A307 QUALITY OR BETTER
** ASSUME f'c = 4000 PSI

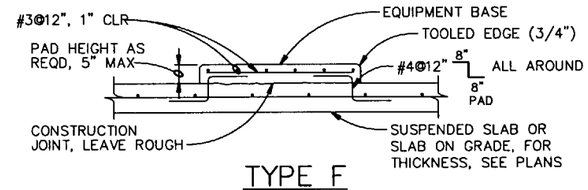

TYPE F

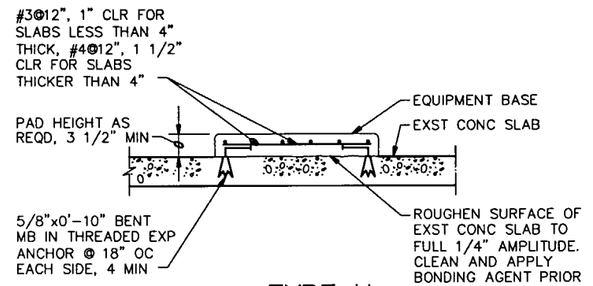

TYPE H

NOTES:

1. BONDING AGENT–TYPE AS RECOMMENDED FOR THIS APPLICATION, AS MANUFACTURED BY W.R. GRACE CO., SIKA CHEMICAL CORPORATION OR ADHESIVE ENGINEERING COMPANY.
2. EXPANSION ANCHORS–SELF DRILLING, SNAP–OFF OR FLUSH TYPE AS MANUFACTURED BY I.T.T. PHILLIPS DRILL DIVISION, OR HILTI HDI DROP–IN ANCHORS, OR EQUAL.
3. EQUIPMENT BASE SHALL BE INSTALLED LEVEL.
4. PAD SIZE SHALL BE AS INDICATED OR SHOWN ON THE PLANS. WHERE SIZE IS NOT INDICATED OR SHOWN, PAD SIZE SHALL BE DETERMINED BY THE EQUIPMENT SUPPLIER.
5. WHEN ANCHORAGE OF EQUIPMENT TO CONCRETE IS REQUIRED, USE SST WEDGE ANCHORS SPECIFIED.

7 EQUIPMENT PAD
NTS

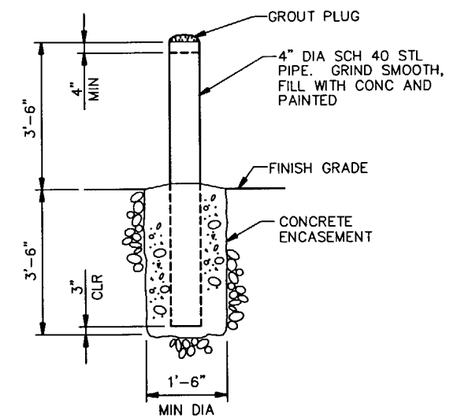

8 EXTERIOR GUARD POST
NTS

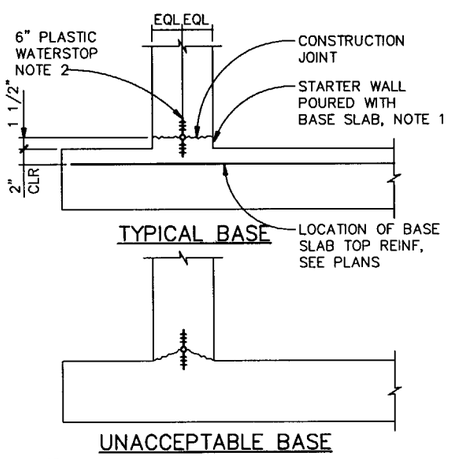

TYPICAL BASE

UNACCEPTABLE BASE

NOTES:

1. STARTER WALL REQUIRED FOR ALL CONSTRUCTION JOINTS WITH WATERSTOPS, UNLESS SPECIFICALLY INDICATED OTHERWISE.
2. SECURE WATERSTOP IN–PLACE AS SPECIFIED.

6 WALL BASE CONSTRUCTION JOINT
NTS

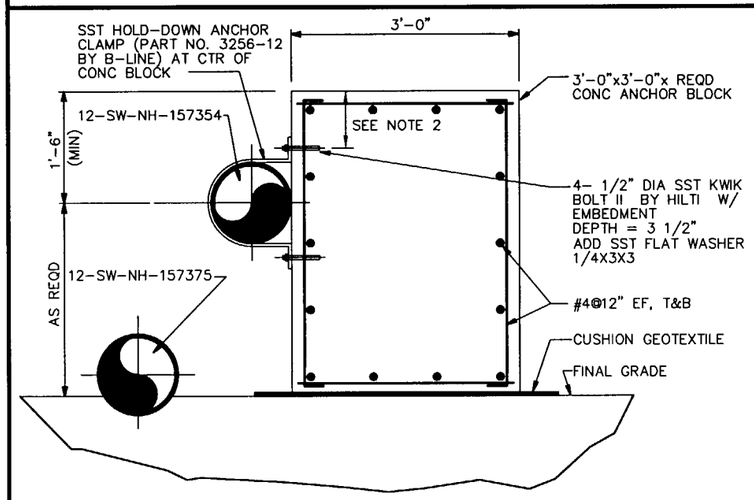

SECTION 9 / P–206
1"=1'–0"

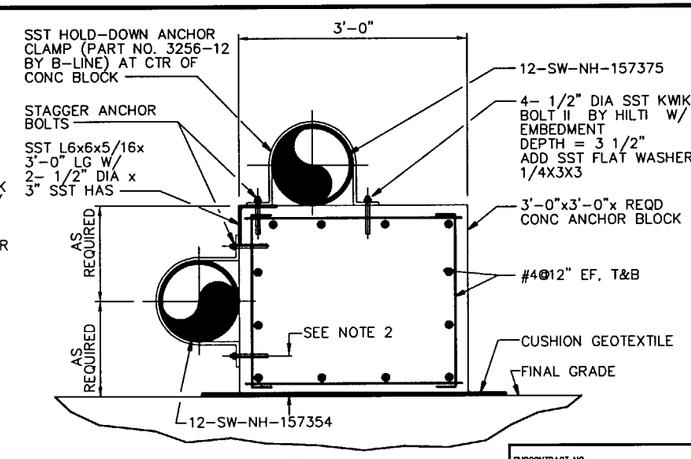

SECTION 10 / P–206
1"=1'–0"

NOTES:

1. HEADED ANCHOR STUDS (HAS) SHALL BE ASTM F593, ANSI TYPE 316, CONDITION CW MANUFACTURERS: NELSON STUD WELDING, FABRISTEEL CO., ELYRIA, OH. STUD WELDING ASSOCIATES INC., ELYRIA, OH.
2. MINIMUM EDGE DISTANCE = 4"

REGISTERED PROFESSIONAL ENGINEER STATE OF IDAHO KENT B SOELBERG 5-8-02

SUBCONTRACT NO.	S01–588058
REQUESTER:	
DESIGN:	S. DESPRADEL
DRAWN:	JOSH PRETS
PROJECT NO.	
SPEC CODE	
FOR REVIEW/APPROVAL SIGNATURES SEE DAR NO.	DAR
EFFECTIVE DATE:	

INEEL (Idaho National Engineering & Environmental Laboratory) BECHTEL BWXT IDAHO, LLC

CH2MHILL MWH MONTGOMERY WATSON HARZA

INEEL CERCLA DISPOSAL FACILITY (ICDF)

STRUCTURAL STANDARD DETAILS

SIZE	CAGE CODE	INDEX CODE NUMBER AREA	TYPE	CL	ORIG	DWG–	REV
D		B21	0100	02			0

SCALE: AS SHOWN CPP SHEET AS–205

FMT-01-REV 3.3

PAGE:

REVISIONS		
REV	DESCRIPTION	EFFECTIVE DATE:
0	APPROVED FOR CONSTRUCTION	14 MAY 2002

NOTES:

1. FOR CONDUIT ROUTING AND CABLE SIZE, SEE SUPPLEMENT #3 CONDUIT AND CABLE SCHEDULE ATTACHED TO SPECIFICATION 16005 ELECTRICAL.
2. PROVIDE AND INSTALL CONDUIT SEALS FOR C086 AND C053 AT EVAPORATION CREST PAD BUILDING ENTRANCE.
3. ROLL INTO 1X4 DUCT BANK:
   [C001, C005, C007, C003] FROM EVAP BUILDING
   [C002, C006, C008, C004] FROM LANDFILL BUILDING.
4. ROLL DUCT BANK FROM EVAP BUILDING UNDER DUCT BANK FROM LANDFILL TO FORM A 2X4 DUCT BANK.
   [C001, C005, C007, C003]
   [C002, C006, C008, C004]

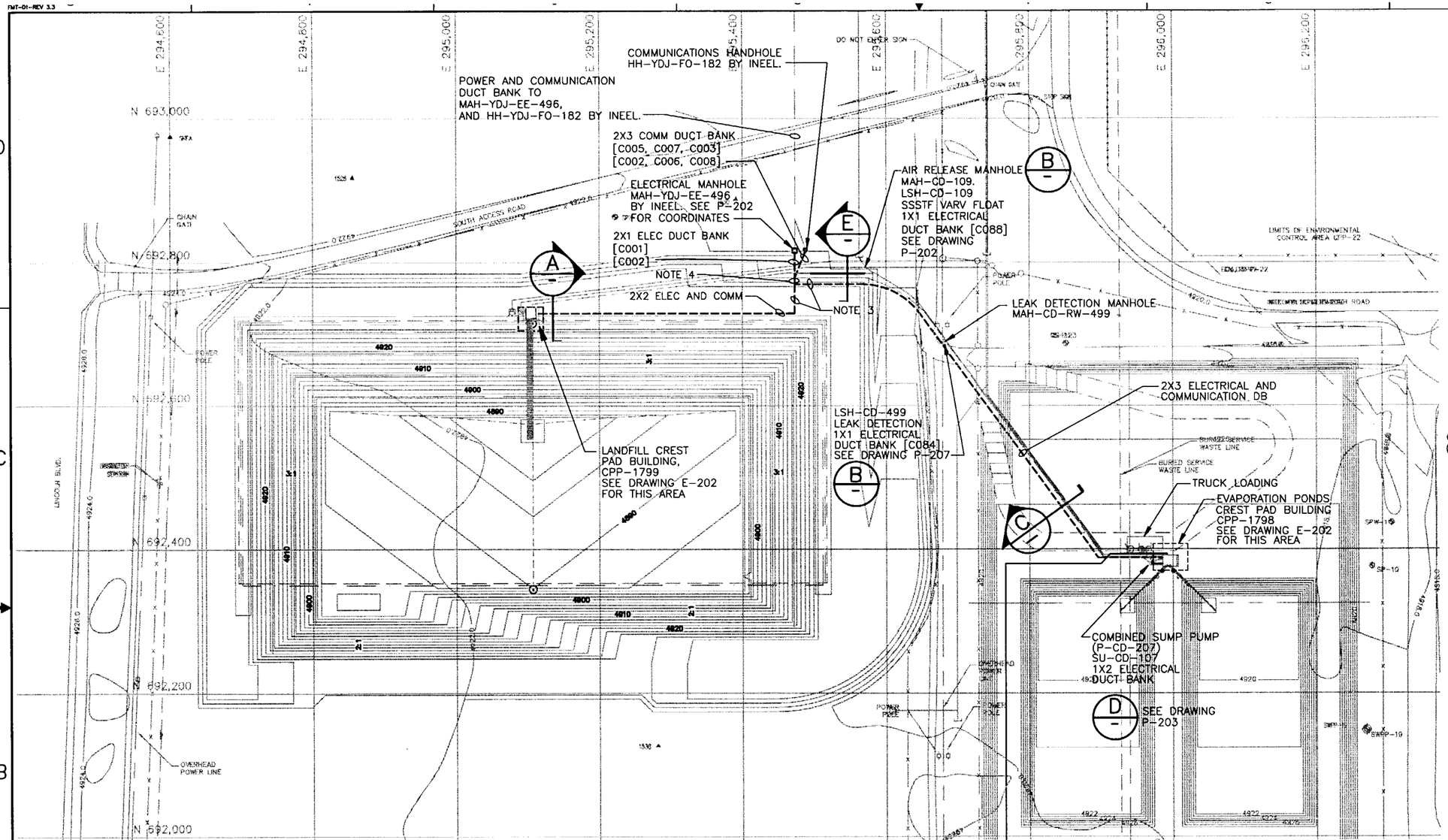

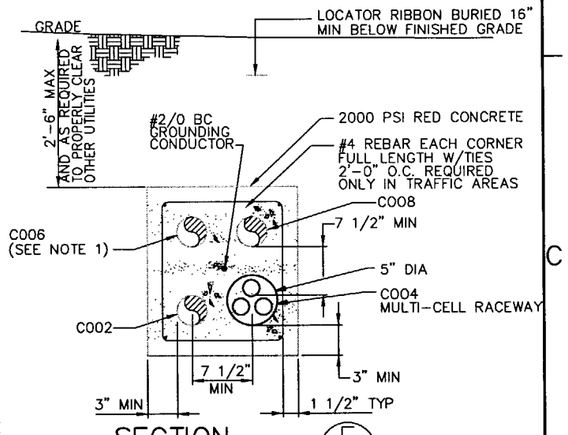

SECTION E
NTS

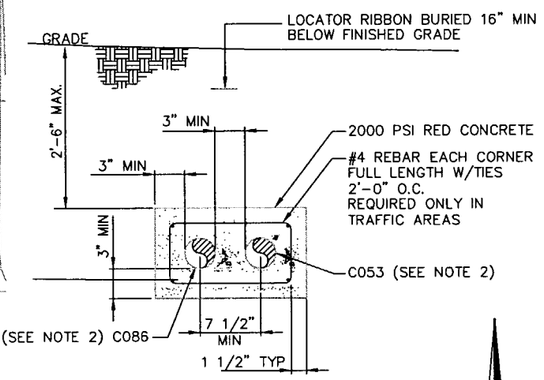

SECTION D
NTS
- , P-203

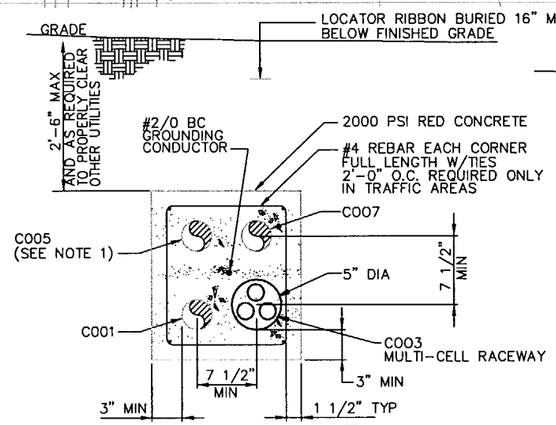

SECTION A
NTS

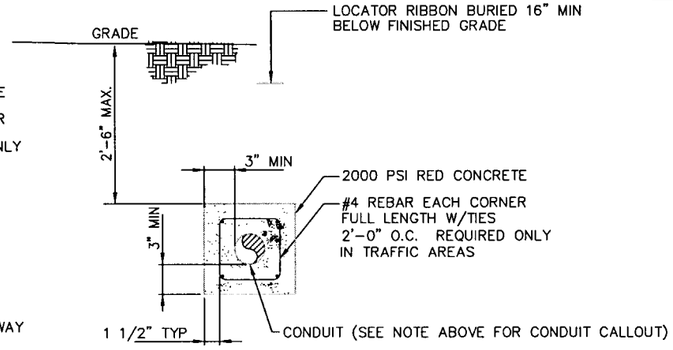

SECTION B
NTS

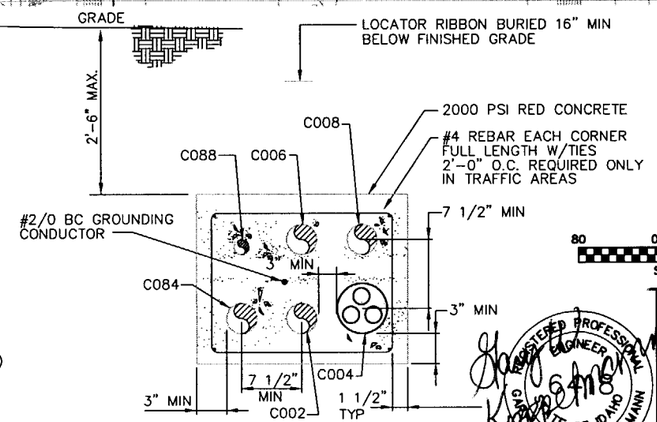

SECTION C
NTS

80 0 80 160
Scale In Feet

REGISTERED PROFESSIONAL ENGINEER STATE OF IDAHO WILLIAM KOPPELMANN 050802

SUBCONTRACT NO.	S01-588058
REQUESTER:	
DESIGN:	L G FOX
DRAWN:	V A MAXEY-SUHR
PROJECT NO.	
SPEC CODE	
FOR REVIEW/APPROVAL SIGNATURES SEE DAR NO.	DAR
EFFECTIVE DATE:	

INEEL Idaho National Engineering & Environmental Laboratory BECHTEL BWXT IDAHO, LLC

CH2MHILL MWH MONTGOMERY WATSON HARZA

INEEL CERCLA DISPOSAL FACILITY (ICDF)

OVERALL ELECTRICAL SITE PLAN

SIZE	CAGE CODE	INDEX CODE NUMBER (AREA / TYPE / CL / ORG)	DWG-	REV
D		B21 / 0200 / 50	CPP	0
SCALE: AS SHOWN			SHEET	E-201

REVISIONS		
REV	DESCRIPTION	EFFECTIVE DATE:
0	APPROVED FOR CONSTRUCTION	14 MAY 2002

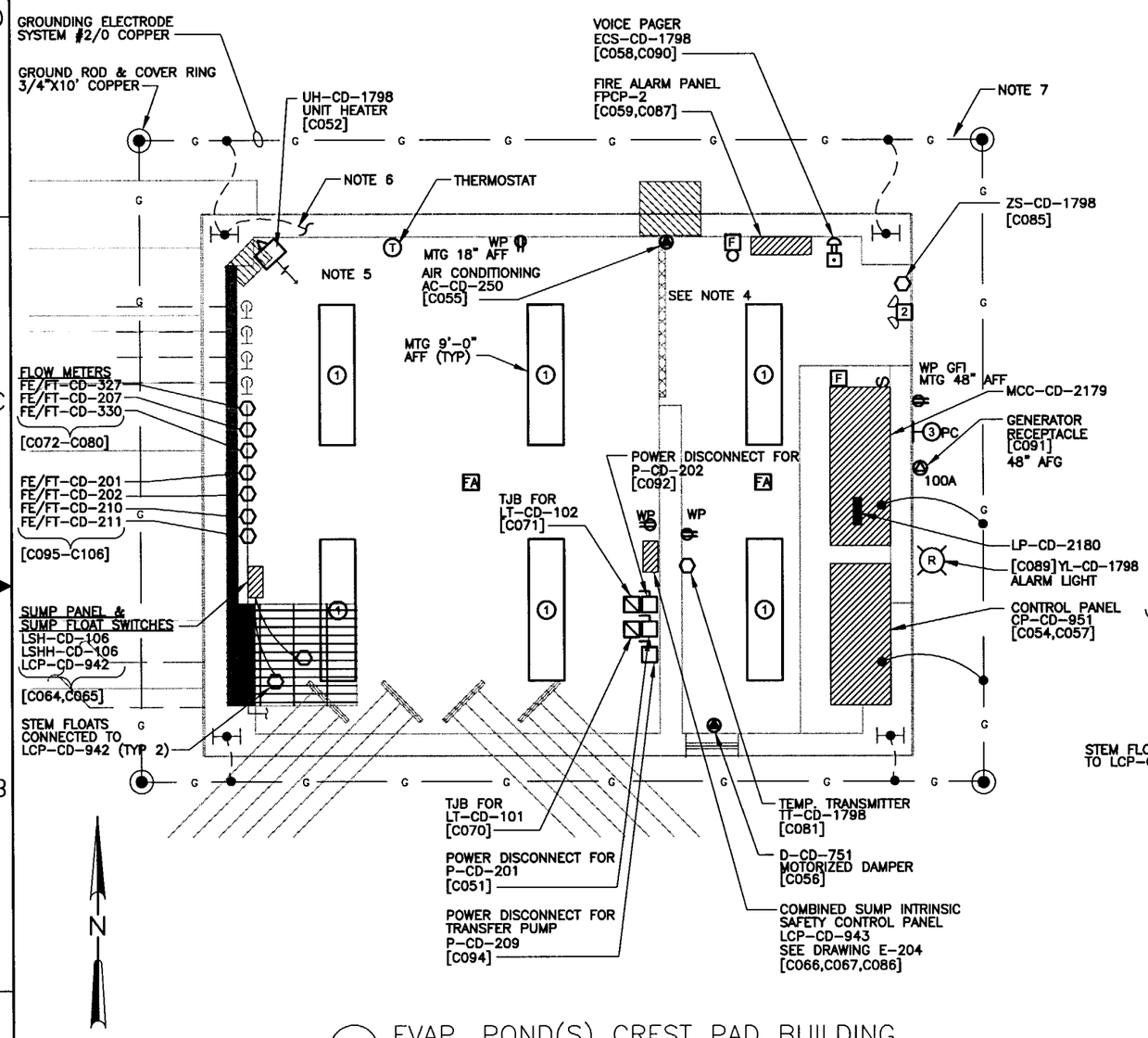

C4 EVAP. POND(S) CREST PAD BUILDING
1/2" = 1'-0"

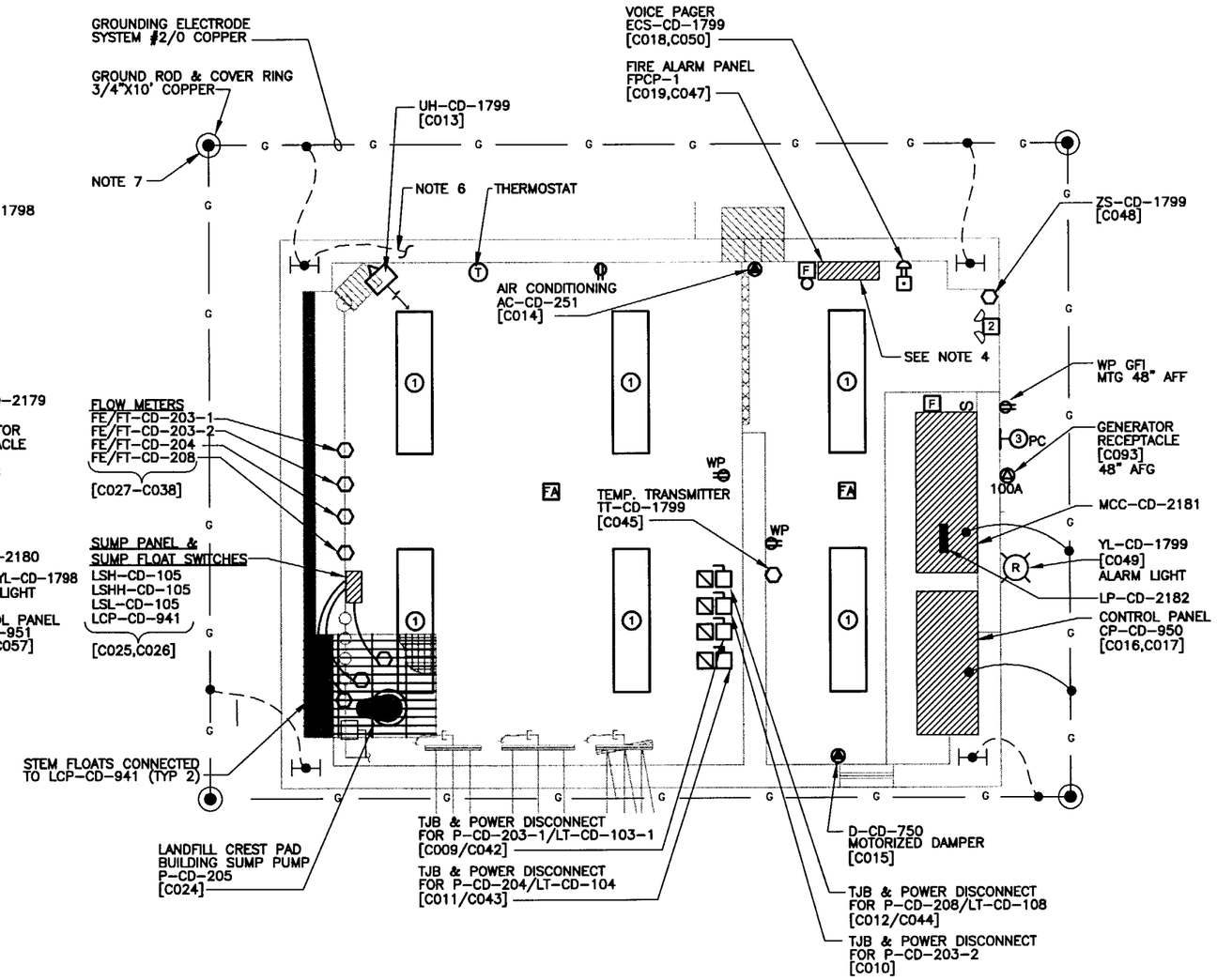

LANDFILL CREST PAD BUILDING
1/2" = 1'-0"

NOTES:

1. FOR CONDUIT ROUTING AND CABLE SIZE, SEE SUPPLEMENT #3 CONDUIT AND CABLE SCHEDULE ATTACHED TO SPECIFICATION 16005 ELECTRICAL.
2. FOR LUMINAIRE INFORMATION, SEE SUPPLEMENT #1 LUMINAIRE SCHEDULE ATTACHED TO SPECIFICATION 16005 ELECTRICAL.
3. FOR EQUIPMENT POWER INFORMATION SEE SUPPLEMENT#2 PANEL SCHEDULE ATTACHED TO SPECIFICATION 16005 ELECTRICAL.
4. FOR FIRE ALARM ROUTING AND CABLING, SEE DRAWING E-204.
5. PROVIDE SUPPORTS FOR PUMP AND INSTRUMENT CABLES USING STRUT SYSTEM BRACKETS AND CHANNELS ATTACHED TO CONCRETE WALLS.
6. COORDINATE W/CONCRETE CONTRACTOR TO INSURE CONTINUITY OF REBAR AND BOND TO GROUNDING SYSTEM TO FORM UNDERGROUND.
7. USE CHEMICAL ENHANSMENT MATERIAL TO OBTAIN SATISFACTORY GROUND.

0 2 4 6
1/2"=1'-0"

REGISTERED PROFESSIONAL ENGINEER 6418 STATE OF IDAHO GARY WILLIAM KOPPELMANN

SUBCONTRACT NO.	S01-588058
REQUESTER:	
DESIGN:	L G FOX
DRAWN:	V A MAXEY-SUHR
PROJECT NO.	
SPEC CODE	
FOR REVIEW/APPROVAL SIGNATURES SEE DAR NO.	DAR
EFFECTIVE DATE:	

INEEL Idaho National Engineering & Environmental Laboratory BECHTEL BWXT IDAHO, LLC

CH2MHILL MWH MONTGOMERY WATSON HARZA

INEEL CERCLA DISPOSAL FACILITY (ICDF)

CREST PAD BUILDINGS
ELECTRICAL POWER AND LIGHTING PLAN

SIZE	CAGE CODE	INDEX CODE NUMBER				DWG-	REV
		AREA	TYPE	CL	ORIG		
D		B21	0100	02			0

SCALE: AS SHOWN CPP SHEET E-202

REVISIONS		
REV	DESCRIPTION	EFFECTIVE DATE:
0	APPROVED FOR CONSTRUCTION	14 MAY 2002

NOTES:

1. INEEL SHALL PROVIDE 480V, 3-PHASE, 3 WIRE FEEDER TO MANHOLE MAH-YDJ-EE-496. CONTRACTOR SHALL PROVIDE FEEDER TAPS AND ROUTE ADDITIONAL POWER CABLES TO RESPECTIVE CREST PAD BUILDING MOTOR CONTROL CENTERS.
2. INEEL SHALL PROVIDE MAIN BREAKER OR FUSED DEVICE IN EXISTING SWITCHGEAR TO ADEQUATELY PROTECT, START AND OPERATE CONNECTED MOTOR LOADS PER NEC 430-62.
3. MOTOR CONTROL CENTER LAYOUT IS FOR GENERAL GUIDANCE ONLY.
4. PROVIDE MOTOR CONTROL FOR 208V, 3 PHASE, 4 WIRE HVAC EQUIPMENT OPERATION. POWER SHALL COME FROM RESPECTIVE LIGHTING PANEL, AFTER MCC INSTALLATION AT CREST PAD BUILDINGS.
5. ALL CIRCUIT BREAKERS ARE 3-POLE UNLESS IDENTIFIED OTHERWISE.
6. INTERLOCK MAIN BREAKER(S) WITH GENERATOR BREAKER(S).
7. PROVIDE AND INSTALL CONDUIT SEALS.

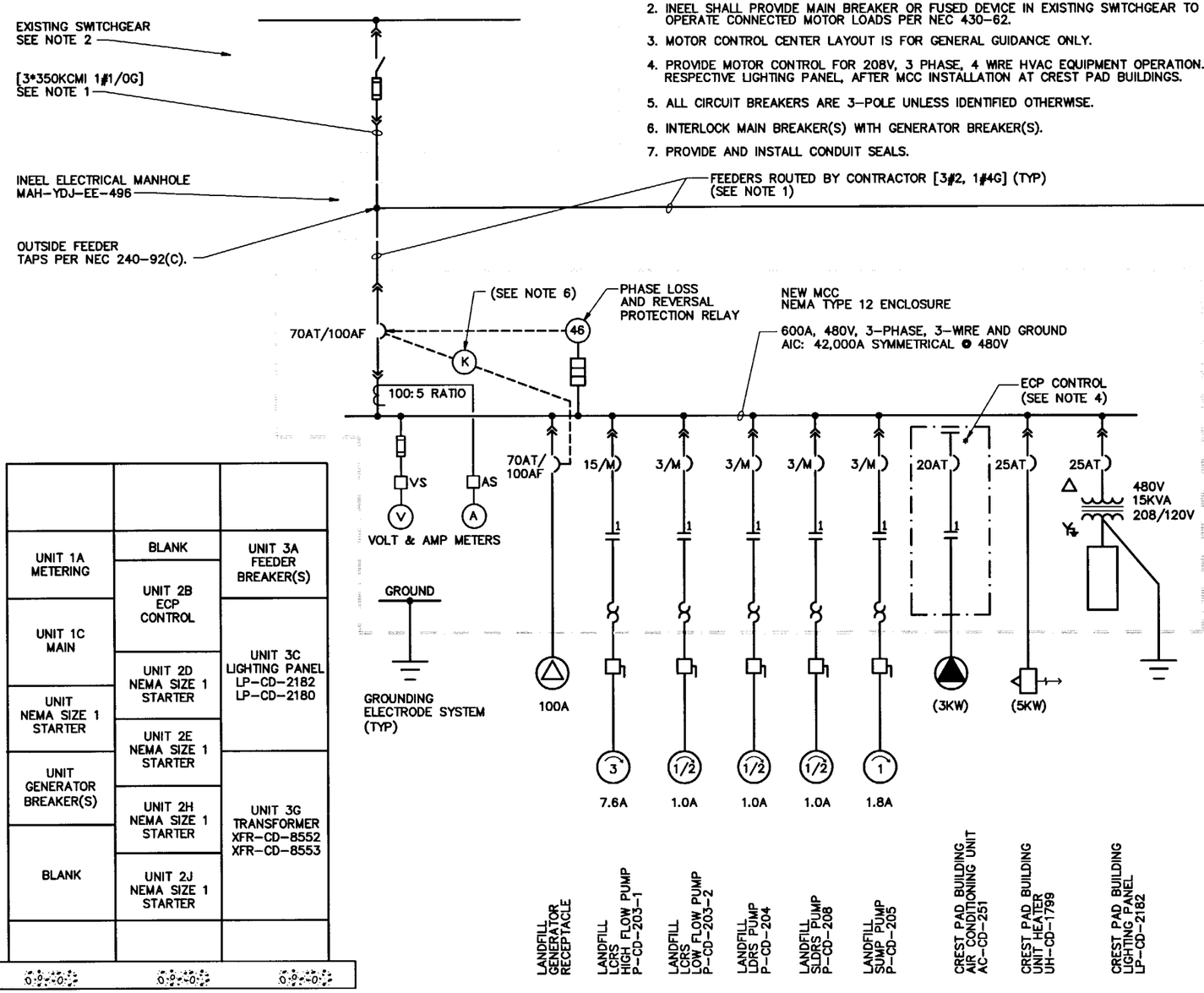

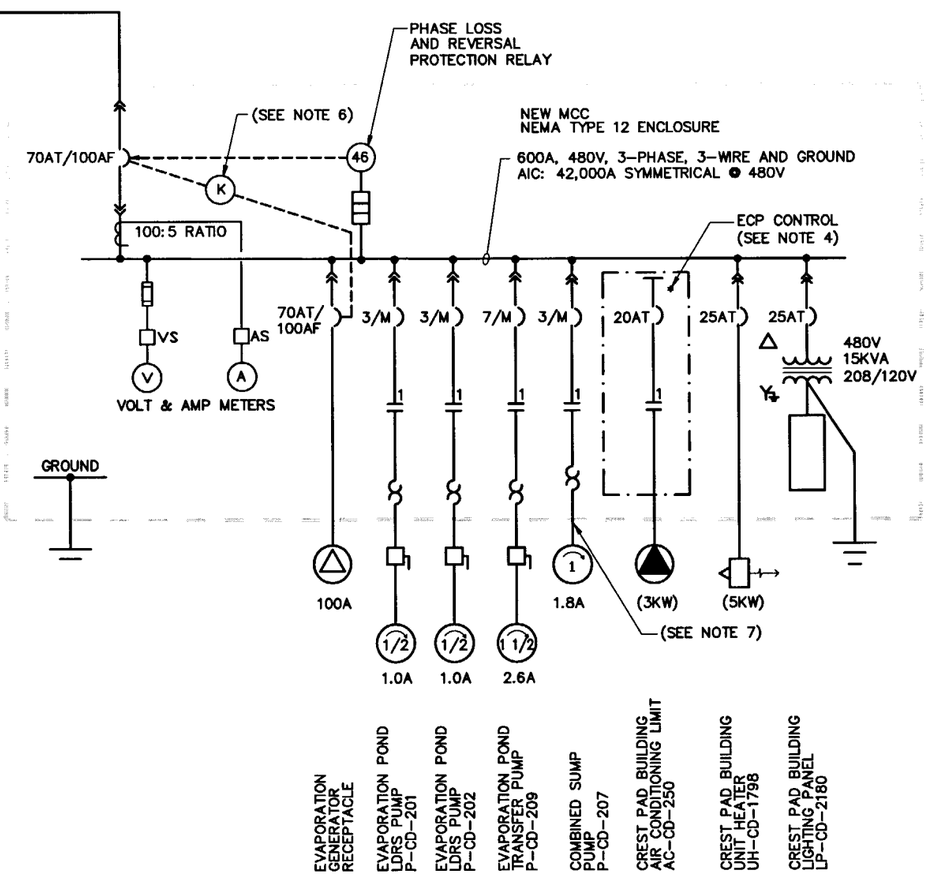

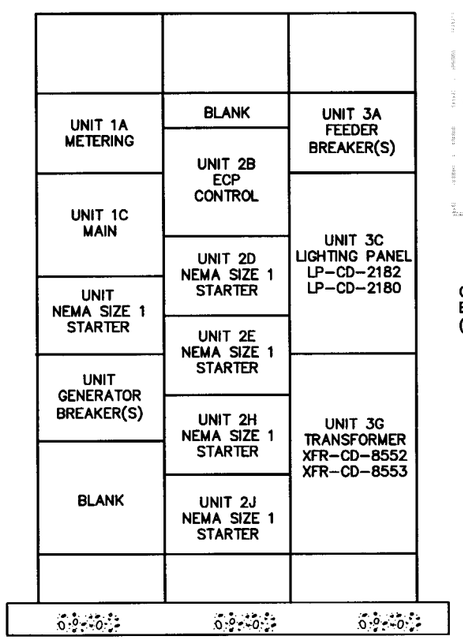

MCC-CD-2179 LAYOUT
MCC-CD-2180 LAYOUT
NTS

LANDFILL
CREST PAD BUILDING ELECTRICAL ONE-LINE DIAGRAM
NTS

EVAPORATION POND(S) CREST PAD BUILDING
ELECTRICAL ONE-LINE DIAGRAM
NTS

SUBCONTRACT NO.	S01-588058
REQUESTER:	
DESIGN:	L G FOX
DRAWN:	V A MAXEY-SUHR
PROJECT NO.	
SPEC CODE	
FOR REVIEW/APPROVAL SIGNATURES SEE DAR NO.	DAR
EFFECTIVE DATE:	

REGISTERED PROFESSIONAL ENGINEER GARY WILLIAM KOPPELMANN STATE OF IDAHO 9318

050802

INEEL Idaho National Engineering & Environmental Laboratory BECHTEL BWXT IDAHO, LLC

CH2MHILL MWH MONTGOMERY WATSON HARZA

INEEL CERCLA DISPOSAL FACILITY (ICDF)

ELECTRICAL ONE-LINE DIAGRAM AND MCC ELEVATIONS

SIZE	CAGE CODE	INDEX CODE NUMBER AREA	TYPE	CL	ORIG	DWG-	REV
D		B21	9999	02			0

SCALE: NONE CPP SHEET E-203

REVISIONS		
REV	DESCRIPTION	EFFECTIVE DATE:
0	APPROVED FOR CONSTRUCTION	14 MAY 2002

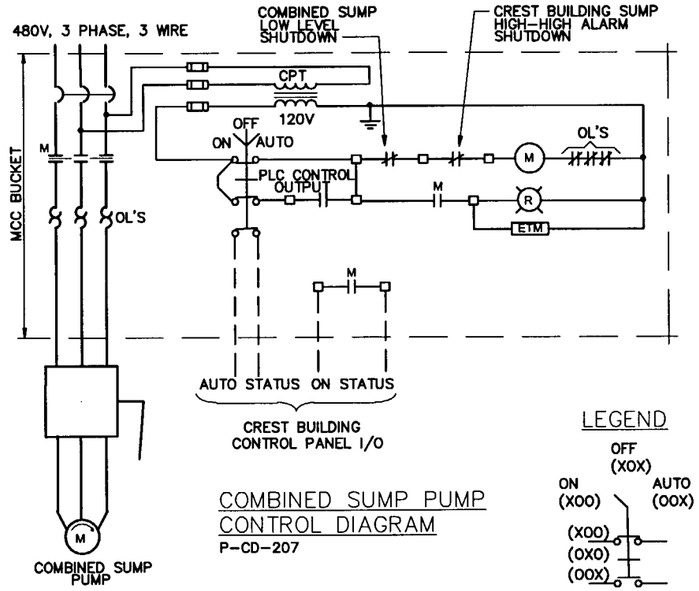

COMBINED SUMP PUMP CONTROL DIAGRAM
P-CD-207

LEGEND

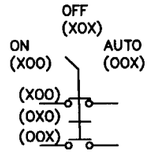

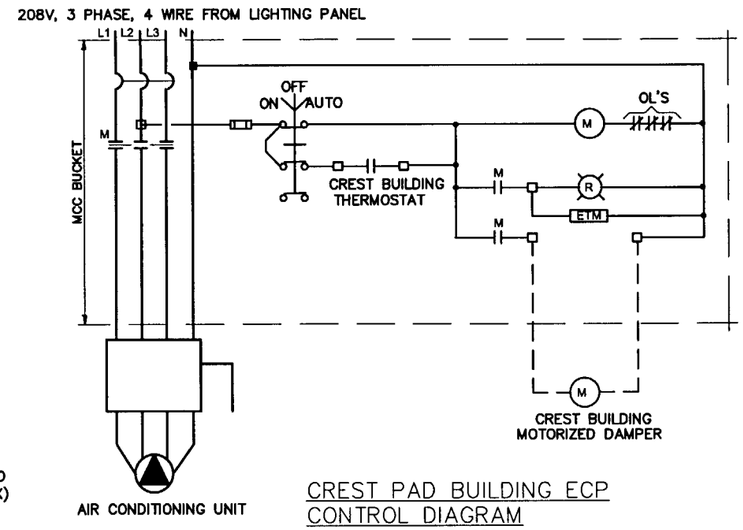

CREST PAD BUILDING ECP CONTROL DIAGRAM
AC-CD-250, AC-CD-251

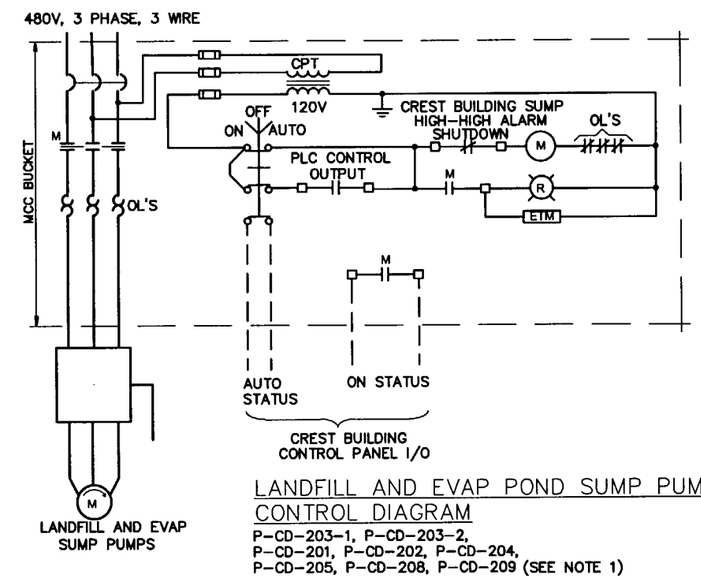

LANDFILL AND EVAP POND SUMP PUMPS CONTROL DIAGRAM
P-CD-203-1, P-CD-203-2,
P-CD-201, P-CD-202, P-CD-204,
P-CD-205, P-CD-208, P-CD-209 (SEE NOTE 1)

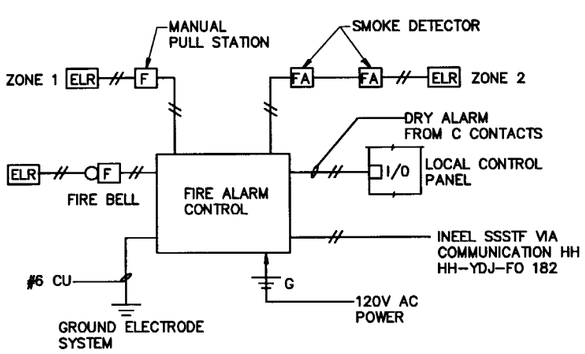

CREST PAD BUILDING FIRE ALARM SYSTEM (TYP 2)
FPCP-1, FPCP-2

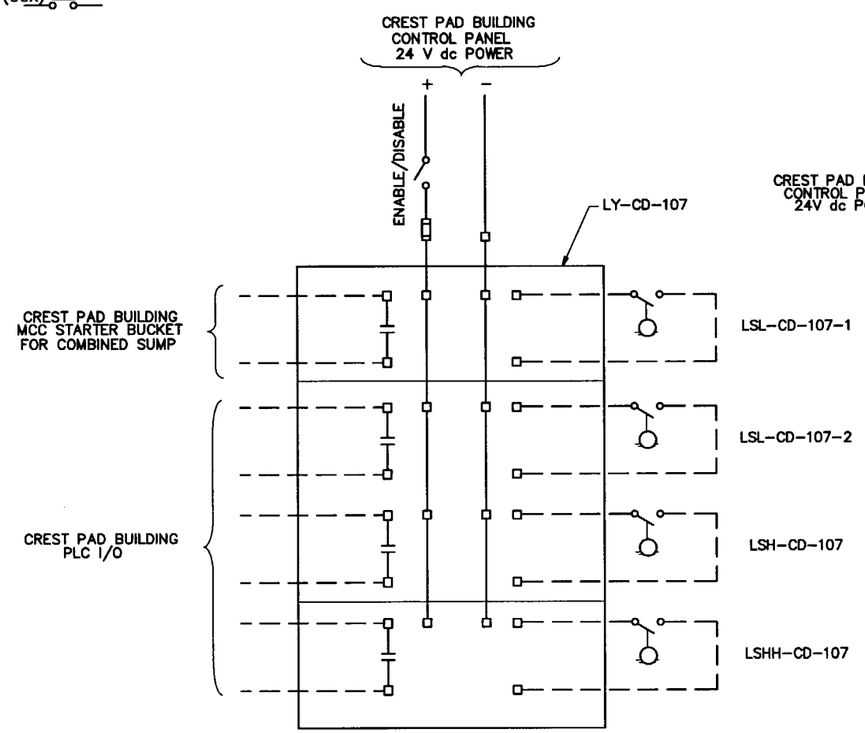

COMBINED SUMP INTRINSIC SAFETY CONTROL DIAGRAM
LCP-CD-943

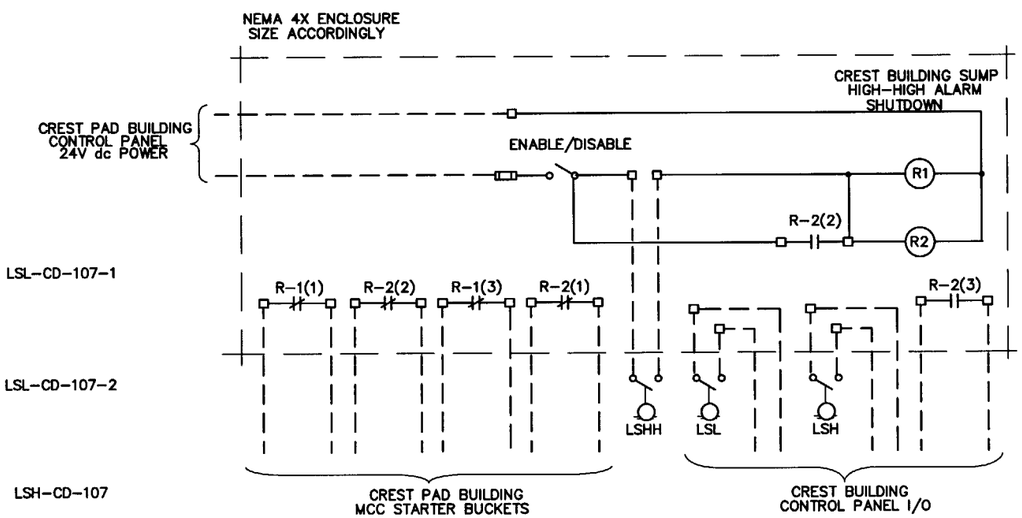

CREST PAD BUILDING SUMPS HIGH LEVEL ALARM CONTROL DIAGRAM
LCP-CD-941, LCP-CD-942
(SEE NOTE 2)

NOTES:

1. NO PLC CONTROL FOR P-CD-209.
2. NO LSL CONNECTION IN LCP-CD-942.

REGISTERED PROFESSIONAL ENGINEER
GARY WILLIAM KOPPELMANN
STATE OF IDAHO
6418
050802

SUBCONTRACT NO.	S01-588058
REQUESTER:	
DESIGN:	L G FOX
DRAWN:	V A MAXEY-SUHR
PROJECT NO.	
SPEC CODE	
FOR REVIEW/APPROVAL SIGNATURES SEE DAR NO.	DAR
EFFECTIVE DATE:	

INEEL Idaho National Engineering & Environmental Laboratory BECHTEL BWXT IDAHO, LLC

CH2MHILL MWH MONTGOMERY WATSON HARZA

INEEL CERCLA DISPOSAL FACILITY (ICDF)

ELECTRICAL CONTROL DIAGRAMS

SIZE	CAGE CODE	INDEX CODE NUMBER AREA	TYPE	CL	ORIG	DWG-	REV
D		B21	9999	02			0

SCALE: NONE CPP SHEET E-204

REVISIONS		
REV	DESCRIPTION	EFFECTIVE DATE:
0	APPROVED FOR CONSTRUCTION	14 MAY 2002

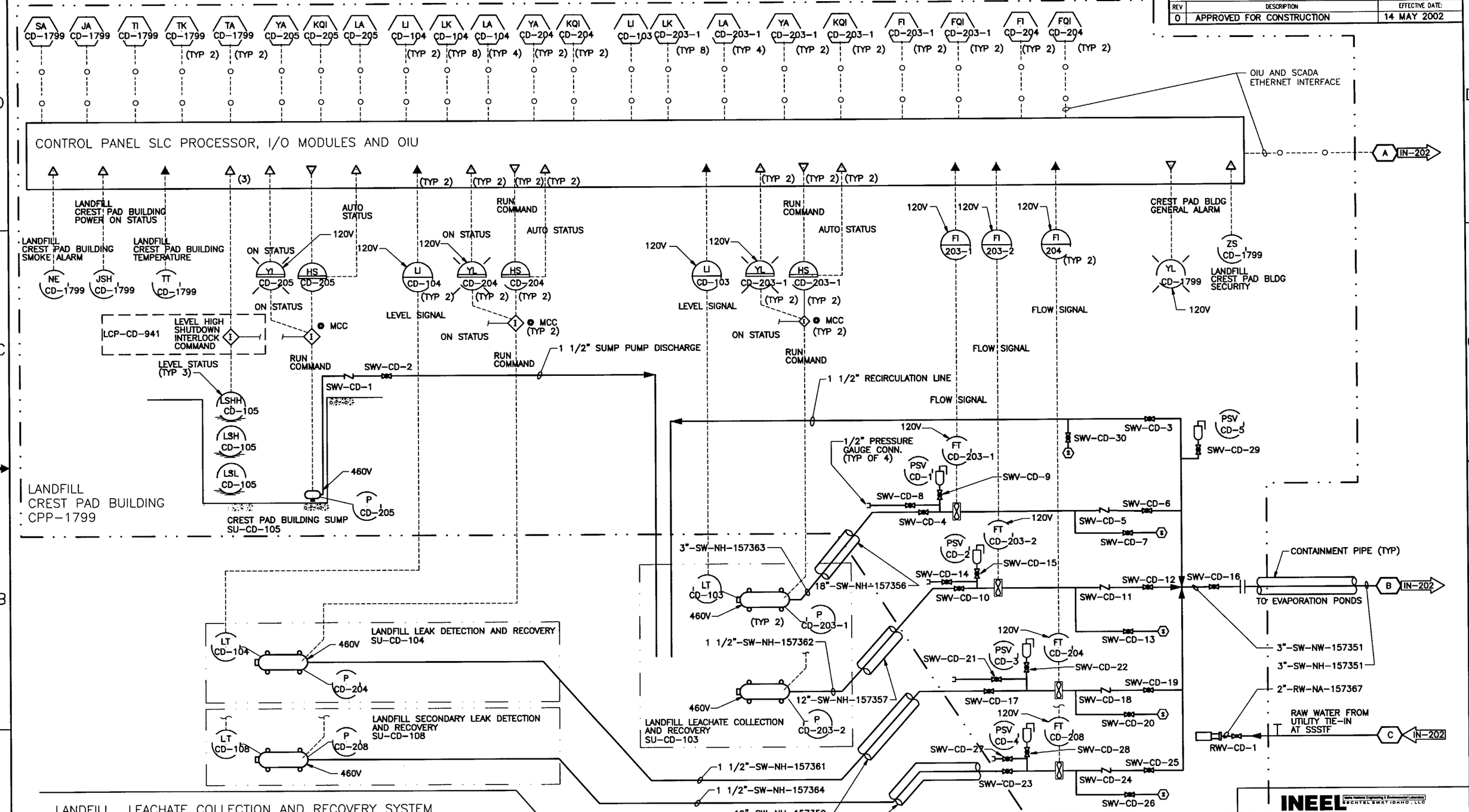

NOTE: SEE SUPPLEMENTS IN SPEC SECTION 13401 PROCESS INSTRUMENTATION CONTROL SYSTEMS (PICS) FOR DESCRIPTION OF INSTRUMENTATION AND PICS EQUIPMENT.

REGISTERED PROFESSIONAL ENGINEER CARY WILLIAM KOPPELMANN STATE OF IDAHO 8478

SUBCONTRACT NO.	S01-588058
REQUESTER:	
DESIGN:	L G FOX
DRAWN:	V A MAXEY-SUHR
PROJECT NO.	
SPEC CODE	
FOR REVIEW/APPROVAL SIGNATURES SEE DAR NO.	DAR
EFFECTIVE DATE:	

INEEL Idaho National Engineering & Environmental Laboratory BECHTEL BWXT IDAHO, LLC

CH2MHILL MWH MONTGOMERY WATSON HARZA

INEEL CERCLA DISPOSAL FACILITY (ICDF)

LANDFILL
PROCESS & INSTRUMENTATION DIAGRAM

SIZE	CAGE CODE	INDEX CODE NUMBER AREA	TYPE	CL	ORIG	DWG-	REV
D		B21	9999	02			0

SCALE: NONE CPP SHEET IN-201

REVISIONS		
REV	DESCRIPTION	EFFECTIVE DATE:
0	APPROVED FOR CONSTRUCTION	14 MAY 2002

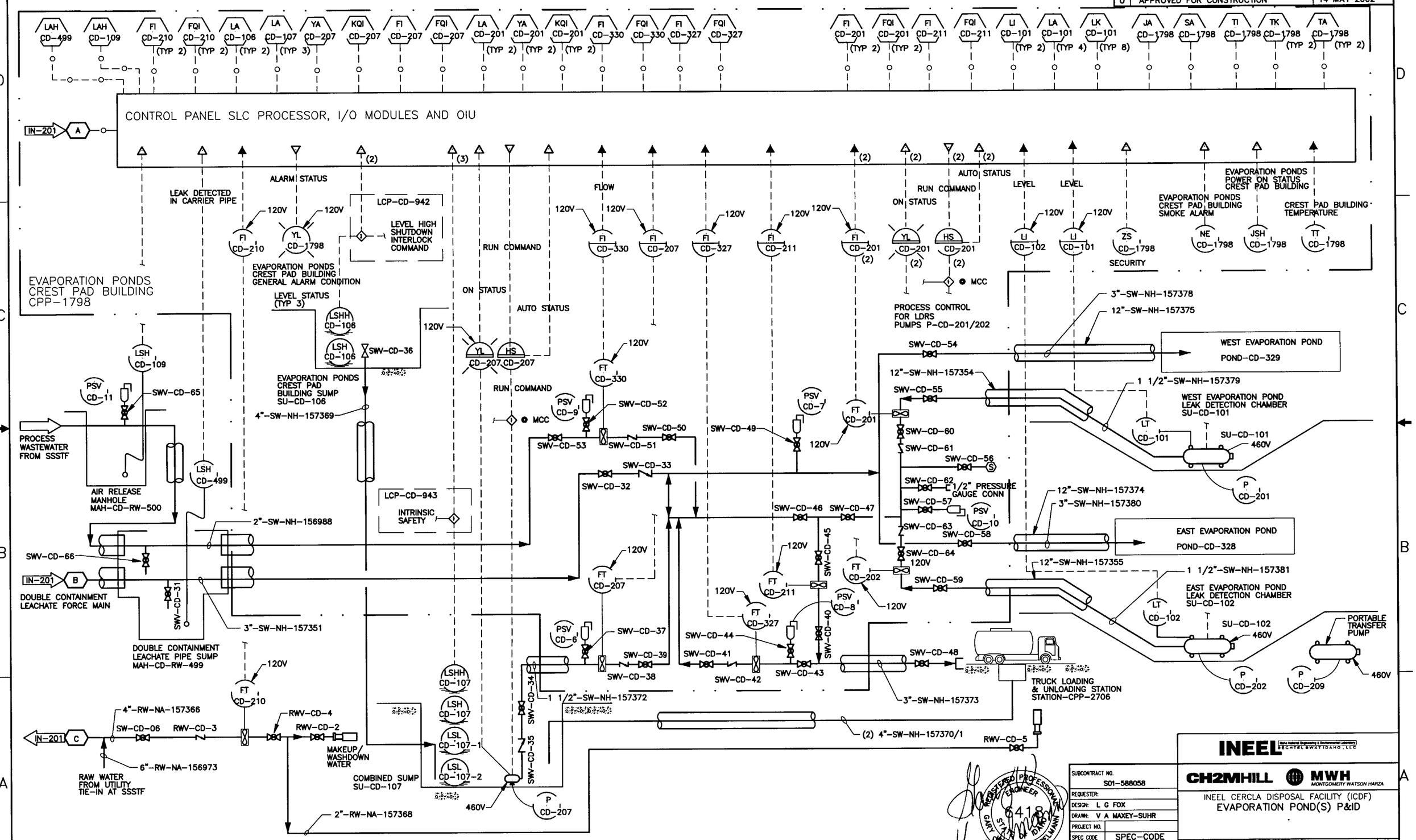

NOTE: SEE SUPPLEMENTS IN SPEC SECTION 13401 PICS FOR DESCRIPTION OF INSTRUMENTATION AND PICS EQUIPMENT.

REGISTERED PROFESSIONAL ENGINEER 6418 STATE OF IDAHO GARY WILLIAM KOPPELMANN 050802

SUBCONTRACT NO.	S01-588058
REQUESTER:	
DESIGN:	L G FOX
DRAWN:	V A MAXEY-SUHR
PROJECT NO.	
SPEC CODE	SPEC-CODE
FOR REVIEW/APPROVAL SIGNATURES SEE DAR NO.	DAR
EFFECTIVE DATE:	

INEEL — Idaho National Engineering & Environmental Laboratory — BECHTEL BWXT IDAHO, LLC

CH2MHILL — MWH MONTGOMERY WATSON HARZA

INEEL CERCLA DISPOSAL FACILITY (ICDF)
EVAPORATION POND(S) P&ID

SIZE	CAGE CODE	INDEX CODE NUMBER AREA	TYPE	CL	ORIG	DWG-	REV
D		B21	0000	00			0

SCALE: CPP SHEET IN-202

REVISIONS		
REV	DESCRIPTION	EFFECTIVE DATE:
0	APPROVED FOR CONSTRUCTION	14 MAY 2002

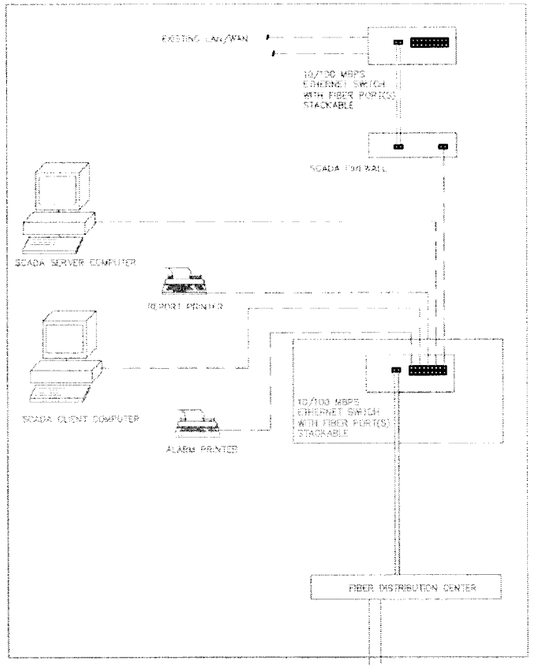

INEEL SCADA DISTRIBUTION

FIBER OPTIC CABLES

NOTES:

1. FIBER OPTIC SWITCH AT INEEL CONNECTS FIBER OUTPUT TO FIBER DISTRIBUTION PANEL (PATCH PANEL). ETHERNET FIBER OPTIC CABLES (MULTI-MODE) ARE ROUTED FROM FIBER DISTRIBUTION PANEL TO INEEL CERCLA DISPOSAL FACILITY SLC-5/05 ETHERNET PROCESSOR LOCATED INSIDE LEACHATE COLLECTION CREST BUILDING.

2. LANDFILL CREST PAD BUILDING SLC5/05 ETHERNET PROCESSOR AND CHASSIS SHALL CONSIST OF THE FOLLOWING MODULES AND COMPONENTS:
   > BLACK BOX MODEL NUMBER LE1401A 8 PORT MODULAR FIBER SWITCH WITH 4 PORT FIBER MODULE PART NUMBER LE1419C AND 4 PORT RJ45 DUAL SPEED MODULE PART NUMBER LE1425C
   > FIBER PATCH PANEL
   > AB MODEL NUMBER PANELVIEW 600 OIU.
   > AB MODEL NUMBER 1746-P2 POWER SUPPLY.
   > AB MODEL NUMBER 1747-A7 7 SLOT CHASSIS.
   > AB MODEL NUMBER 1747-L552 SLC- 5/05 PROCESSOR INSTALLED IN SLOT 0.
   > AB MODEL NUMBER 1746-NI8 ANALOG INPUT MODULE INSTALLED IN SLOT 1.
   > AB MODEL NUMBER 1746-IB16 DISCRETE INPUT MODULE INSTALLED IN SLOT 3.
   > AB MODEL NUMBER 1746-OX8 DISCRETE OUTPUT MODULES INSTALLED IN SLOT 5.
   > AB MODEL NUMBER BLANK MODULES INSTALLED IN SLOT 2, 4, 6.

3. EVAPORATOR POND(S) CREST PAD BUILDING SLC5/05 ETHERNET PROCESSOR AND CHASSIS SHALL CONSIST OF THE FOLLOWING MODULES AND COMPONENTS:
   > BLACK BOX MODEL NUMBER LE1401A 8 PORT MODULAR FIBER SWITCH WITH 4 PORT FIBER MODULE PART NUMBER LE1419C AND 4 PORT RJ45 DUAL SPEED MODULE PART NUMBER LE1425C
   > FIBER PATCH PANEL
   > AB MODEL NUMBER PANELVIEW 600 OIU.
   > AB MODEL NUMBER 1746-P2 POWER SUPPLY.
   > AB MODEL NUMBER 1747-A7 7 SLOT CHASSIS.
   > AB MODEL NUMBER 1747-L552 SLC- 5/05 PROCESSOR INSTALLED IN SLOT 0.
   > AB MODEL NUMBER 1746-NI8 ANALOG INPUT MODULE INSTALLED IN SLOT 1, 2.
   > AB MODEL NUMBER 1746-IB16 DISCRETE INPUT MODULE INSTALLED IN SLOT 3, 4.
   > AB MODEL NUMBER 1746-OX8 DISCRETE OUTPUT MODULES INSTALLED IN SLOT 5.
   > AB MODEL NUMBER BLANK MODULES INSTALLED IN SLOT 6.

4. SSSTF BUILDING SLC5/05 ETHERNET PROCESSOR AND CHASSIS SHALL CONSIST OF THE FOLLOWING MODULES AND COMPONENTS:
   > BLACK BOX MODEL NUMBER LE1401A 8 PORT MODULAR FIBER SWITCH WITH 4 PORT FIBER MODULE PART NUMBER LE1419C AND 4 PORT RJ45 DUAL SPEED MODULE PART NUMBER LE1425C
   > FIBER PATCH PANEL
   > AB MODEL NUMBER PANELVIEW 600 OIU.
   > AB MODEL NUMBER 1746-P2 POWER SUPPLY.
   > AB MODEL NUMBER 1747-A7 7 SLOT CHASSIS.
   > AB MODEL NUMBER 1747-L552 SLC- 5/05 PROCESSOR INSTALLED IN SLOT 0.
   > AB MODEL NUMBER 1746-IA8 DISCRETE INPUT MODULE INSTALLED IN SLOT 1.
   > AB MODEL NUMBER 1746-IA8 DISCRETE INPUT MODULE INSTALLED IN SLOT 2.
   > AB MODEL NUMBER 1746-N2 BLANK MODULE INSTALLED IN SLOT 3.
   > AB MODEL NUMBER 1746-N2 BLANK MODULE INSTALLED IN SLOT 4.
   > AB MODEL NUMBER 1746-N2 BLANK MODULE INSTALLED IN SLOT 5.
   > AB MODEL NUMBER 1746-NI8 ANALOG INPUT MODULES IN SLOT 6.
   > AB MODEL NUMBER 1746-NI8 ANALOG INPUT MODULES IN SLOT 7.

LEGEND

FIBER OPTIC CABLES
RJ-45 CONNECTOR AND 8-WIRE CABLES
FIBER PATCH CHORDS ST-SC

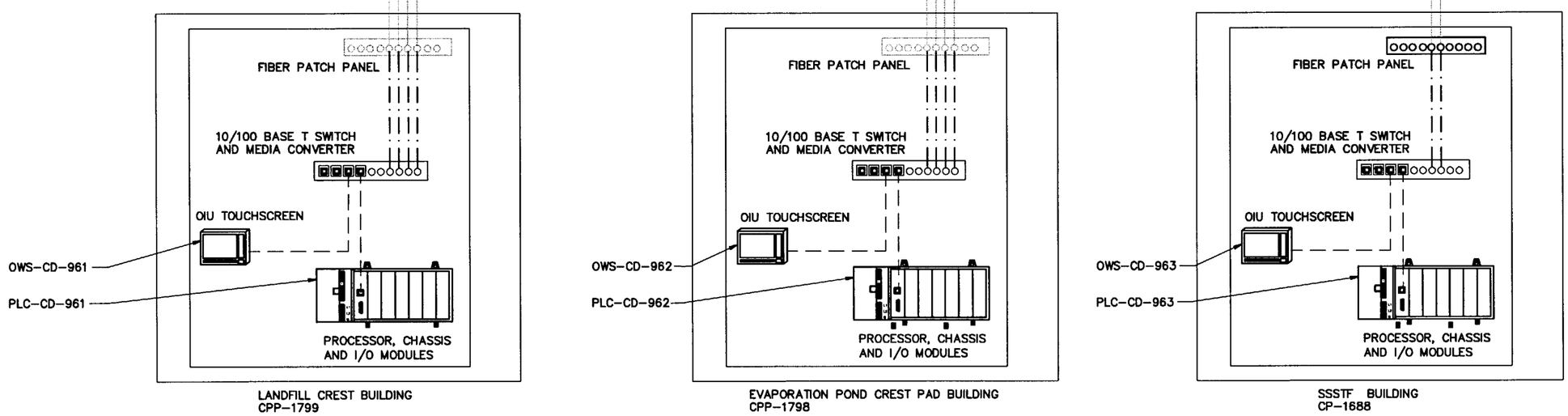

LANDFILL CREST BUILDING
CPP-1799

EVAPORATION POND CREST PAD BUILDING
CPP-1798

SSSTF BUILDING
CP-1688

INEEL CERCLA DISPOSAL PICS BLOCK DIAGRAM

REGISTERED PROFESSIONAL ENGINEER GARY WILLIAM KOPPELMANN 6418 STATE OF IDAHO

SUBCONTRACT NO.	S01-588058
REQUESTER:	
DESIGN:	LG FOX
DRAWN:	V A MAXEY-SUHR
PROJECT NO.	
SPEC CODE	
FOR REVIEW/APPROVAL SIGNATURES SEE DAR NO.	DAR
EFFECTIVE DATE:	

INEEL Idaho National Engineering & Environmental Laboratory BECHTEL BWXT IDAHO, LLC

CH2MHILL MWH MONTGOMERY WATSON HARZA

INEEL CERCLA DISPOSAL FACILITY (ICDF)

PICS BLOCK DIAGRAM

SIZE	CAGE CODE	INDEX CODE NUMBER AREA	TYPE	CL	ORIG	DWG-	REV
D		B21	9999	02			0

SCALE: NONE

CPP SHEET IN-203

REVISIONS		
REV	DESCRIPTION	EFFECTIVE DATE:
0	APPROVED FOR CONSTRUCTION	14 MAY 2002

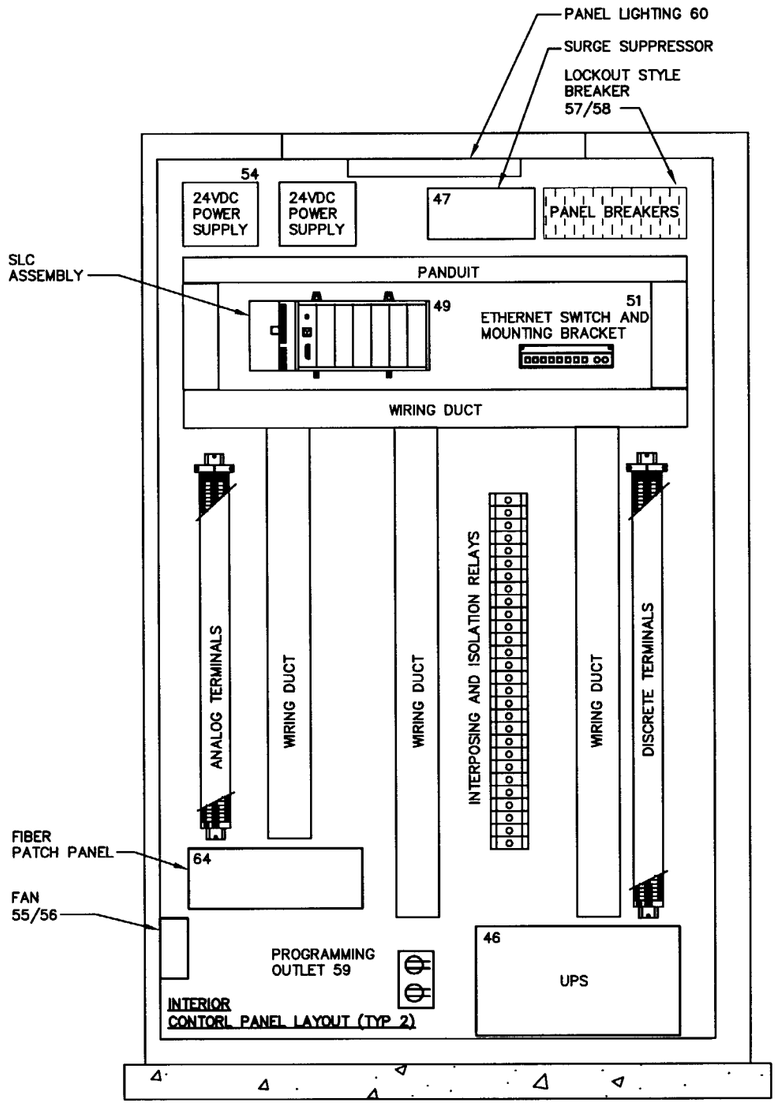

LANDFILL AND EVAPORATION PONDS
CREST PAD BULDING CONTROL PANEL
INTERIOR VIEW

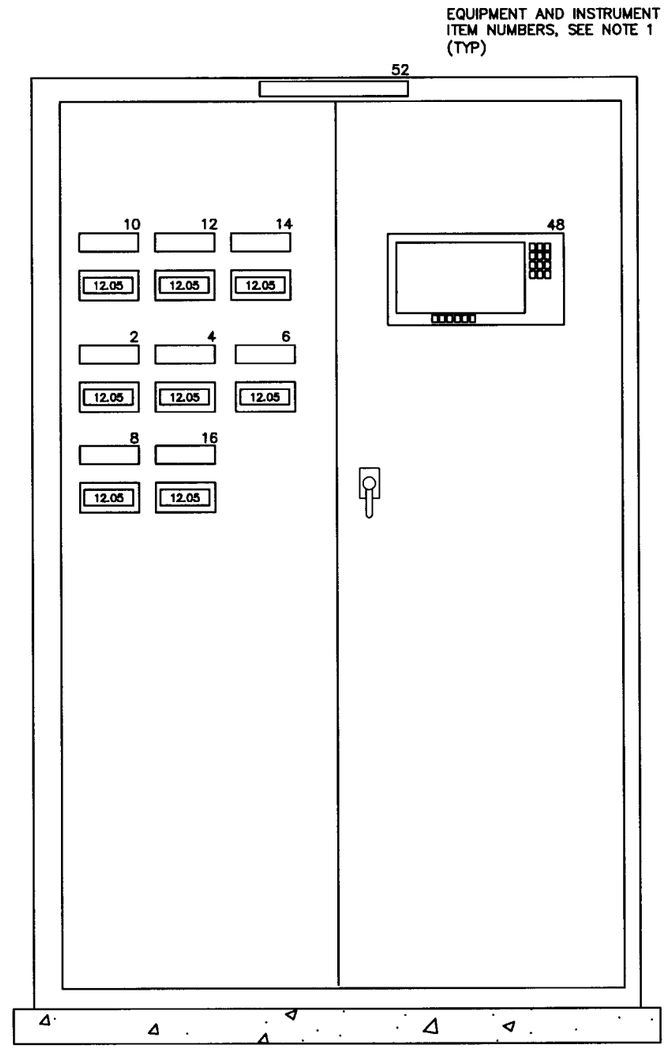

LANDFILL LEACHATE COLLECTION
CREST PAD BUILDING CONTROL PANEL
EXTERIOR VIEW CP-CD-950

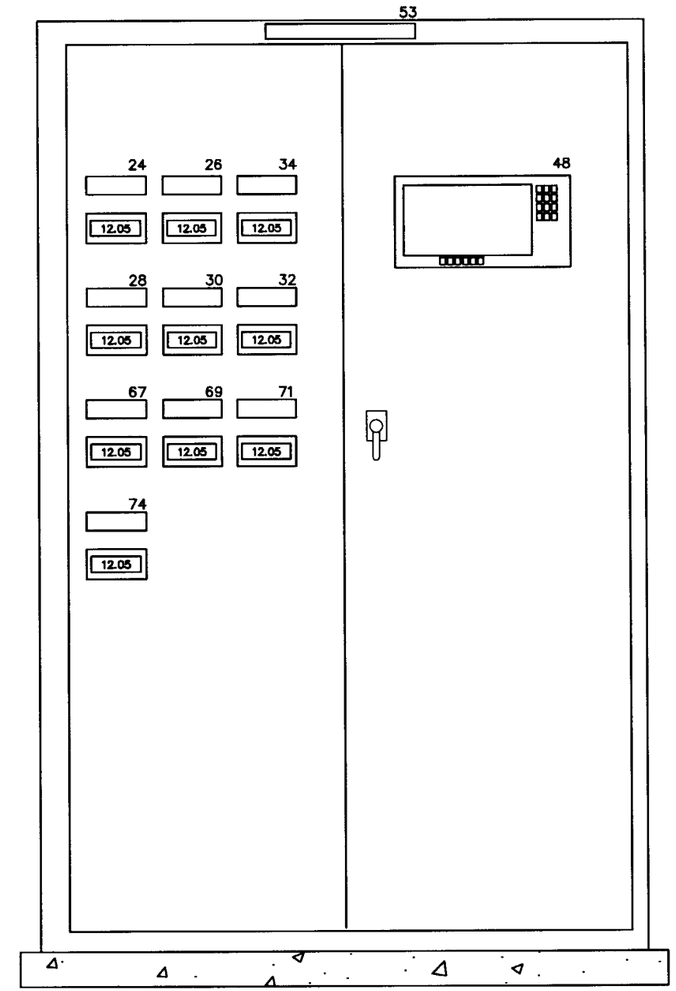

EVAPORATION PONDS
CREST PAD BUILDING CONTROL PANEL
EXTERIOR VIEW CP-CD-951

NOTES:

1. REFERENCE SUPPLEMENT #1 INSTRUMENT LIST ATTACHED TO SPECIFICATION 13401 PICS FOR DESCRIPTION, MANUFACTURER, AND MODEL NUMBERS FOR EACH ITEM.

REGISTERED PROFESSIONAL ENGINEER 6418 STATE OF IDAHO GARY WILLIAM KOPPELMANN

SUBCONTRACT NO.	S01-588058
REQUESTER:	
DESIGN:	L G FOX
DRAWN:	V A MAXEY-SUHR
PROJECT NO.	
SPEC CODE	
FOR REVIEW/APPROVAL SIGNATURES SEE DAR NO.	DAR
EFFECTIVE DATE:	

INEEL Idaho National Engineering & Environmental Laboratory BECHTEL BWXT IDAHO, LLC

CH2MHILL MWH MONTGOMERY WATSON HARZA

INEEL CERCLA DISPOSAL FACILITY (ICDF)

CREST PAD BUILDINGS CONTROL PANEL ELEVATIONS

SIZE	CAGE CODE	INDEX CODE NUMBER				DWG-	REV
		AREA	TYPE	CL	ORIG		
D		B21	9999	02			0
SCALE: NONE						CPP SHEET IN-204	

FMT-01-REV 3.3

PAGE:

REVISIONS		
REV	DESCRIPTION	EFFECTIVE DATE:
0	APPROVED FOR CONSTRUCTION	14 MAY 2002

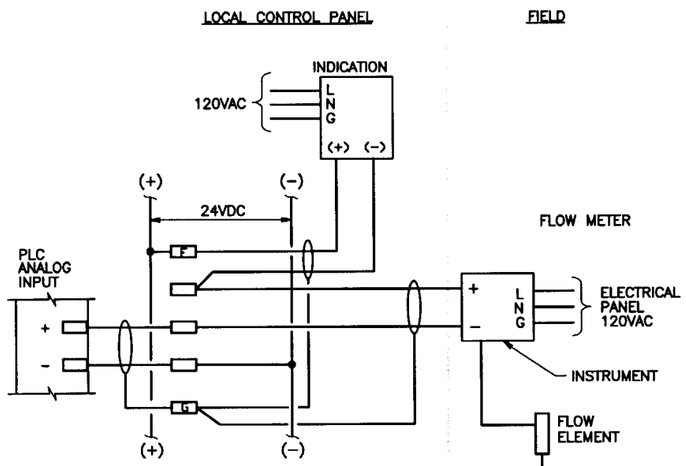

TYPICAL WIRING DIAGRAM NO. 1

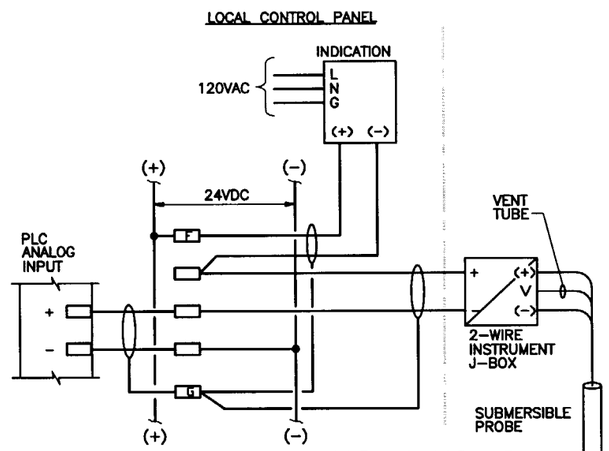

TYPICAL WIRING DIAGRAM NO. 2

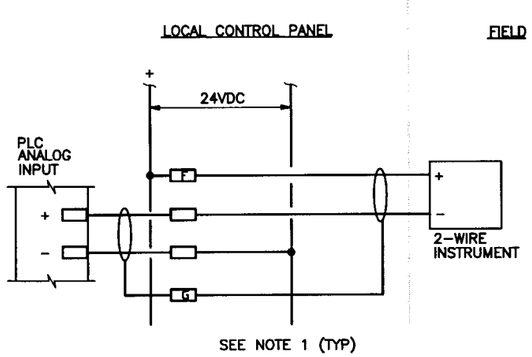

TYPICAL WIRING DIAGRAM NO. 3

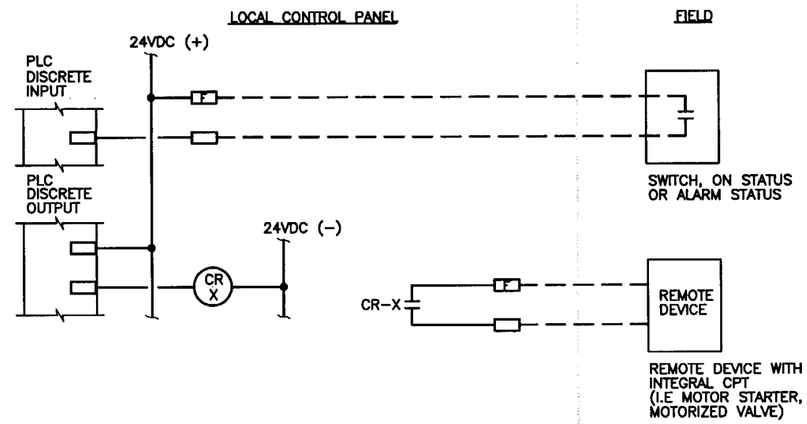

TYPICAL WIRING DIAGRAM NO. 4

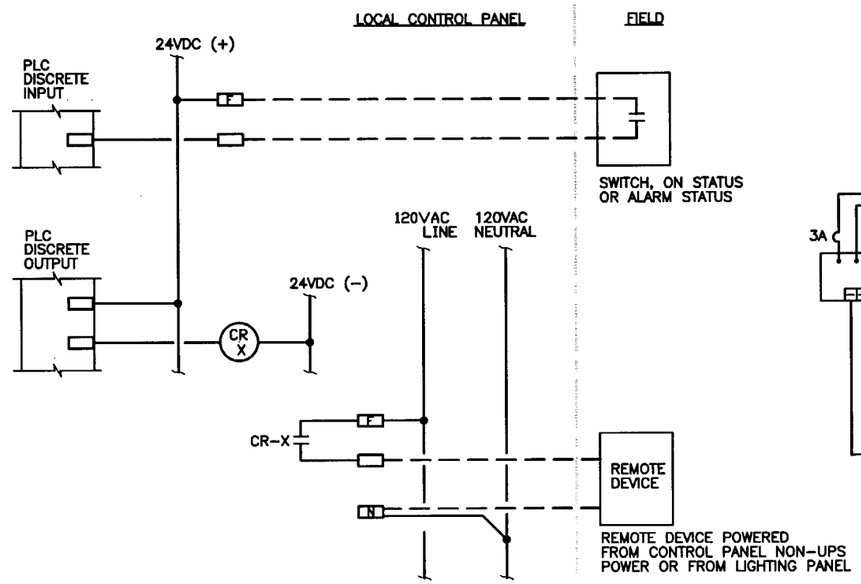

TYPICAL WIRING DIAGRAM NO. 5

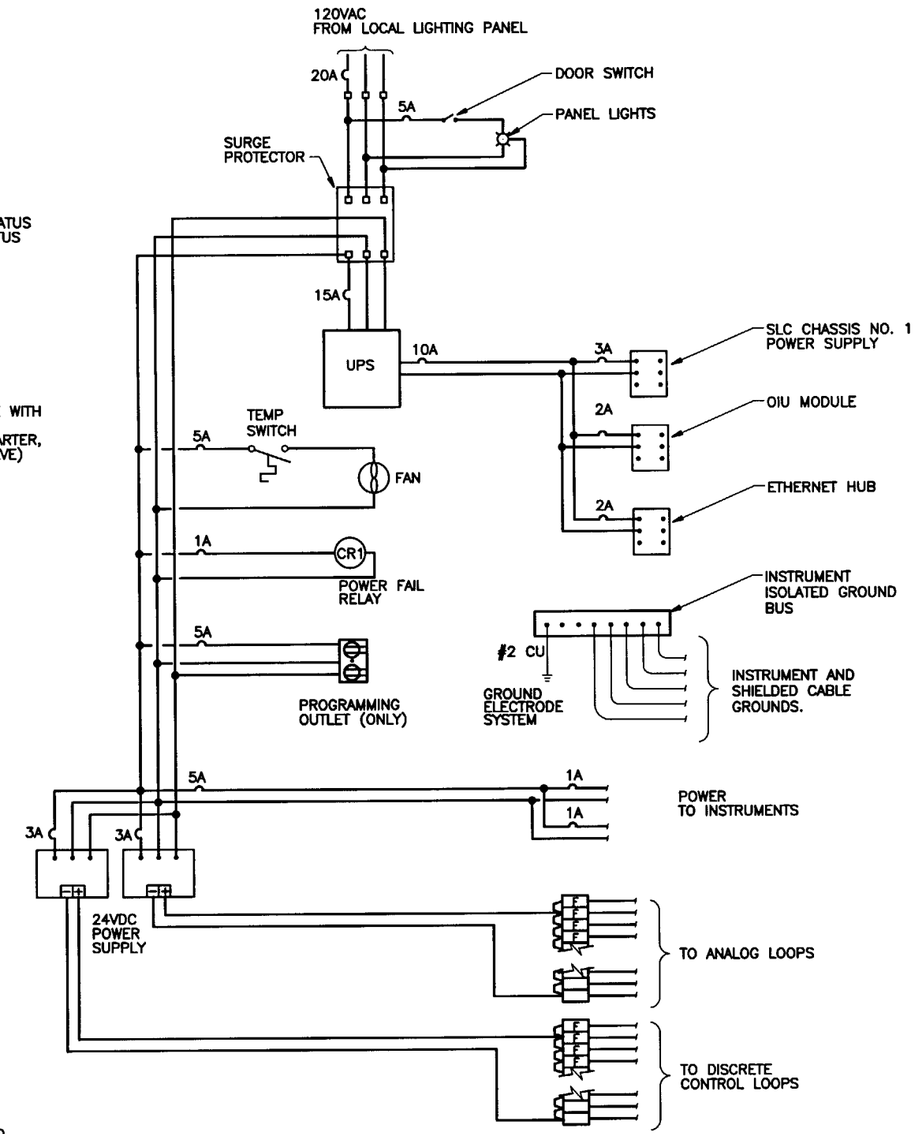

CONTROL PANEL POWER LAYOUT (TYP 2)

NOTES:

1. GROUND TERMINALS FOR ALL INSTRUMENT SHIELDS AND ENCLOSURE GROUNDING SHALL BE BONDED TOGETHER AND TO CONTROL PANELS ISOLATED GROUND BUS.
2. ALL INSTRUMENT CABLES SHALL BE GROUNDED AT PLC END ONLY AND NOT IN INSTRUMENT ENCLOSURES.

LEGEND

F FUSED TERMINAL

G GROUND TERMINAL

REGISTERED PROFESSIONAL ENGINEER 6418 STATE OF IDAHO GARY WILLIAM KOPPELMANN 030502

SUBCONTRACT NO.	S01-588058
REQUESTER:	
DESIGN:	L G FOX
DRAWN:	V A MAXEY-SUHR
PROJECT NO.	
SPEC CODE	
FOR REVIEW/APPROVAL SIGNATURES SEE DAR NO.	DAR
EFFECTIVE DATE:	

INEEL (Idaho National Engineering & Environmental Laboratory) BECHTEL BWXT IDAHO, LLC

CH2MHILL MWH MONTGOMERY WATSON HARZA

INEEL CERCLA DISPOSAL FACILITY (ICDF)

TYPICAL WIRING DIAGRAMS

SIZE	CAGE CODE	INDEX CODE NUMBER				DWG-	REV
		AREA	TYPE	CL	ORG		
D		B21	9999	02			0

SCALE: NONE CPP SHEET IN-205

FMT-D1-REV 3.3

REVISIONS		
REV	DESCRIPTION	EFFECTIVE DATE:
0	APPROVED FOR CONSTRUCTION	14 MAY 2002

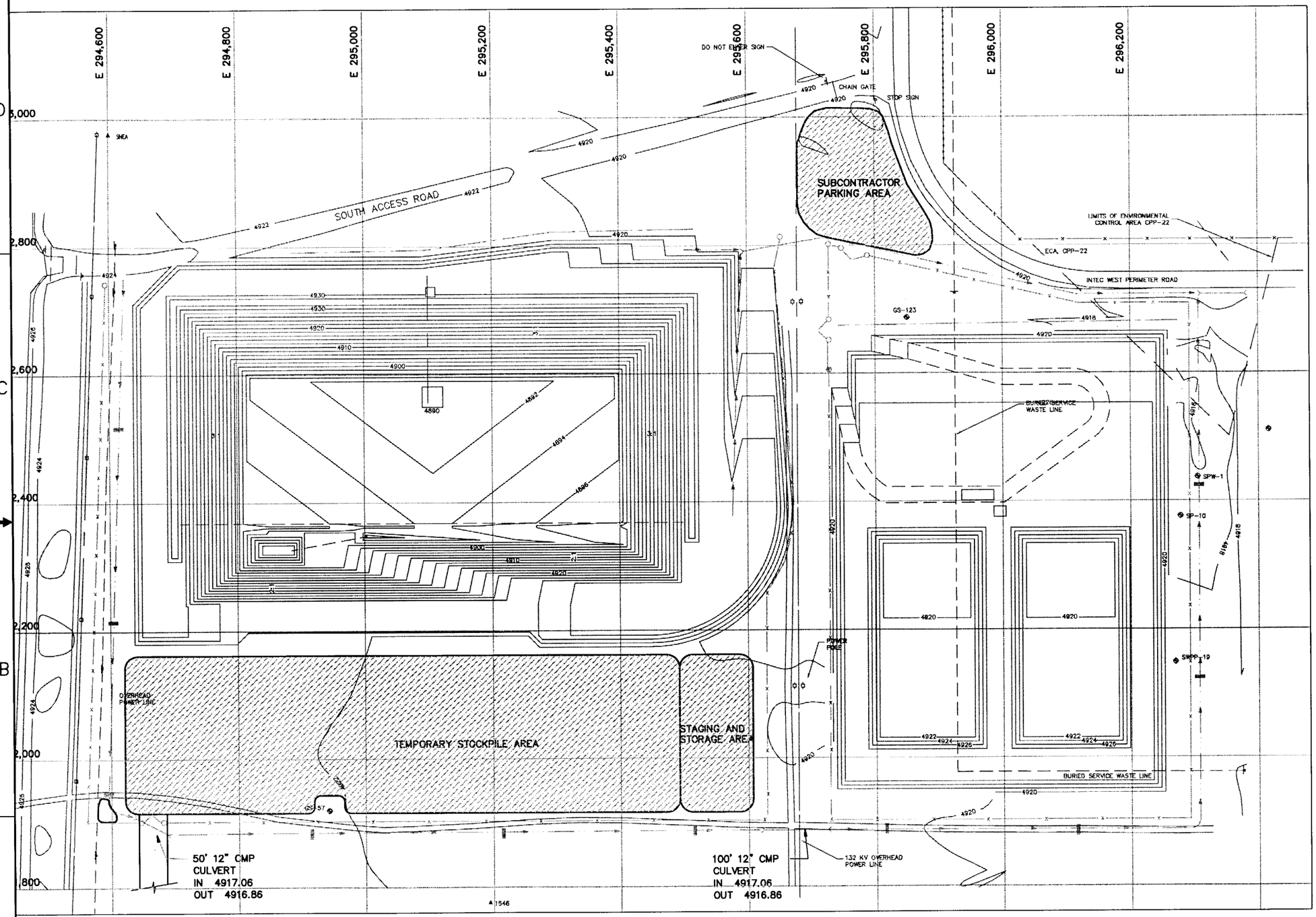

NOTES:

1. TOPSOIL AND SEED DISTURBED AREAS UPON COMPLETION OF FINAL GRADING.
2. SEE SPECIFICATIONS FOR TEMPORARY EROSION CONTROL REQUIREMENTS.

LEGEND:

- TOPSOIL AND SEED
- DRAINAGE DITCH W/FLOW DIRECTION
- STRAW BALE CHECK DAM
- FILTER FENCE

N

SCALE
80' 0 80' 160'
CONTOUR INTERVAL 2FT.

5/7/02

PROFESSIONAL ENGINEER REGISTERED STATE OF IDAHO JAY G. DEHNER

SUBCONTRACT NO.	S01-588058
REQUESTER:	
DESIGN:	J DEHNER
DRAWN:	R MORGAN
PROJECT NO.	
SPEC CODE	
FOR REVIEW/APPROVAL SIGNATURES SEE DAR NO.	DAR
EFFECTIVE DATE:	

INEEL Idaho National Engineering & Environmental Laboratory BECHTEL BWXT IDAHO, LLC

CH2MHILL MWH MONTGOMERY WATSON HARZA

INEEL CERCLA DISPOSAL FACILITY (ICDF)

EROSION CONTROL PLAN

SIZE	CAGE CODE	INDEX CODE NUMBER AREA	TYPE	CL	ORG	DWG-	REV
D		B21	0100	02			

SCALE: AS SHOWN CPP SHEET EC-201

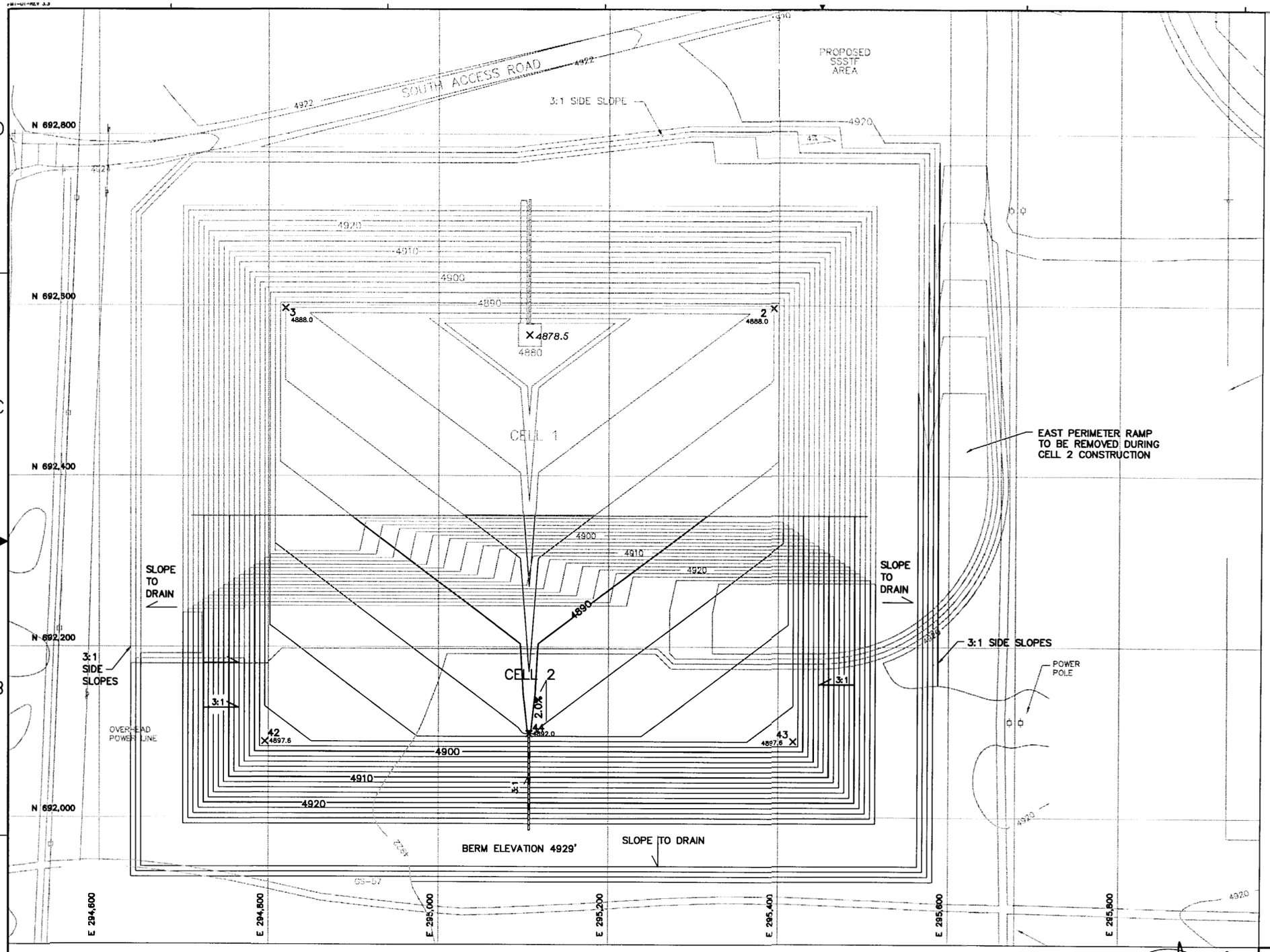

REVISIONS		
REV	DESCRIPTION	EFFECTIVE DATE:
0	APPROVED FOR CONSTRUCTION	14 MAY 2002

NOTES:

1. GRADES SHOWN ARE TOP OF SUBGRADE.

CELL 1&2 SUBGRADE CONTROL POINT LISTING

POINT NO.	NORTHING	EASTING	ELEVATION
1	692565.20	295106.75	4878.5
2	692596.70	295393.71	4888.0
3	692596.70	294819.79	4888.0
42	692088.77	294795.79	4897.6
43	692088.77	295417.71	4897.6
44	692098.04	295106.75	4892.0

PROFESSIONAL ENGINEER REGISTERED STATE OF IDAHO PHILLIP E. CROUSE 9147 5-9-02

SUBCONTRACT NO.	S01-588058
REQUESTER:	
DESIGN:	PHILLIP CROUSE
DRAWN:	JULIE GATES
PROJECT NO.	
SPEC CODE	
FOR REVIEW/APPROVAL SIGNATURES SEE DAR NO.	DAR
EFFECTIVE DATE:	

INEEL Idaho National Engineering & Environmental Laboratory BECHTEL BWXT IDAHO, LLC

CH2MHILL MWH MONTGOMERY WATSON HARZA

INEEL CERCLA DISPOSAL FACILITY (ICDF)

CELL 2
EXCAVATION PLAN

SIZE	CAGE CODE	INDEX CODE NUMBER AREA	TYPE	CI	ORG	DWG-	REV
D		B21	0500	02			

SCALE: AS SHOWN CPP SHEET C-301

FMT-01-REV 3.3

REVISIONS		
REV	DESCRIPTION	EFFECTIVE DATE:
0	APPROVED FOR CONSTRUCTION	14 MAY 2002

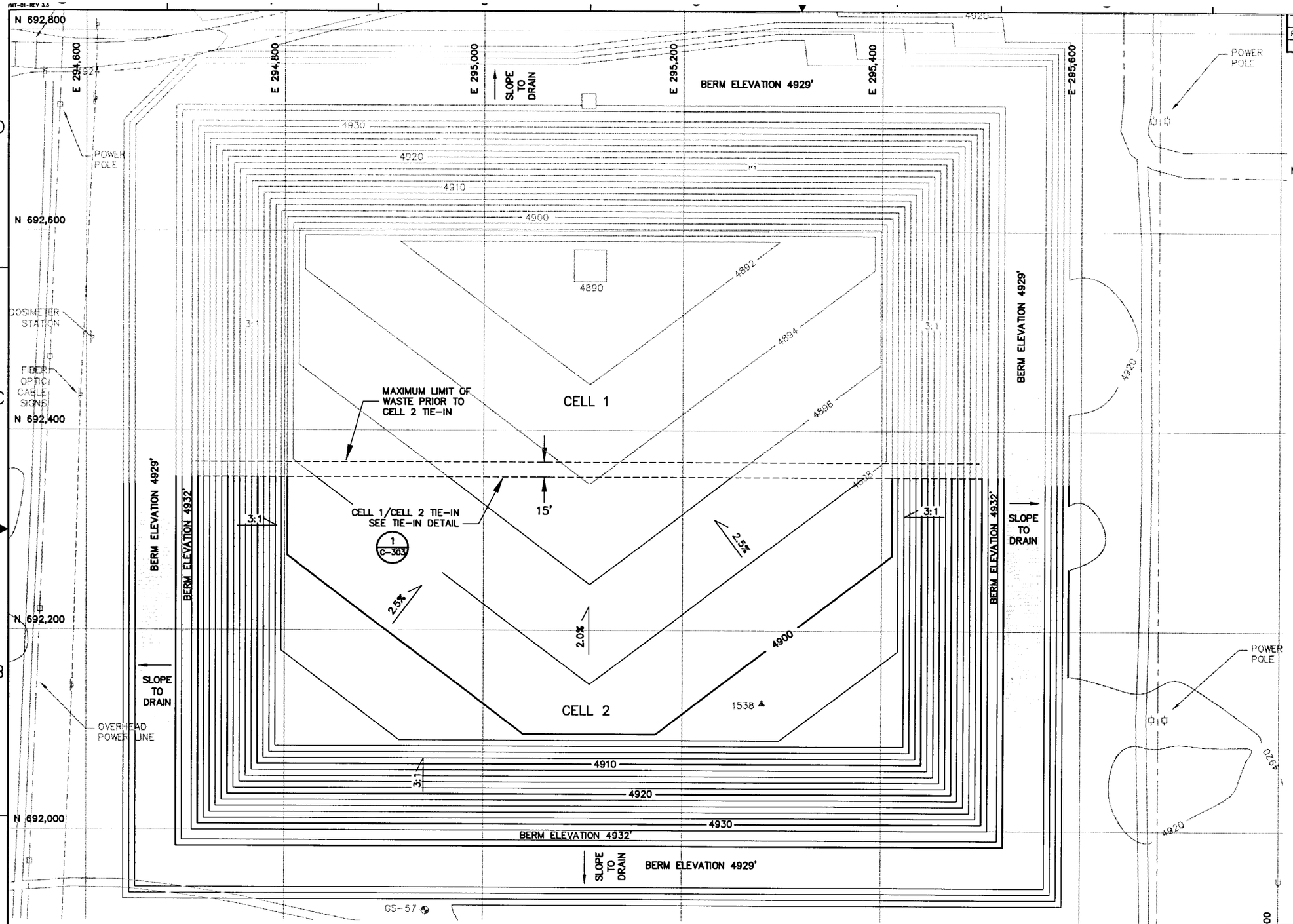

NOTE:
GRADES SHOWN ARE TO TOP OF OPERATIONS LAYER.

SCALE
50' 0 50' 100'
CONTOUR INTERVAL 2FT

PROFESSIONAL ENGINEER REGISTERED 9144 STATE OF IDAHO PHILLIP E. CROUSE

SUBCONTRACT NO.	S01-588058
REQUESTER:	
DESIGN:	PHILLIP CROUSE
DRAWN:	JULIE GATES
PROJECT NO.	
SPEC CODE	
FOR REVIEW/APPROVAL SIGNATURES SEE DAR NO.	DAR
EFFECTIVE DATE:	

INEEL Idaho National Engineering & Environmental Laboratory BECHTEL BWXT IDAHO, LLC

CH2MHILL MWH MONTGOMERY WATSON HARZA

INEEL CERCLA DISPOSAL FACILITY (ICDF)

CELL 2
FINAL GRADING PLAN

SIZE	CAGE CODE	INDEX CODE NUMBER AREA	TYPE	CL	ORG	DWG-	REV
D		B21	0500	02			0

SCALE: AS SHOWN CPP SHEET C-302

REVISIONS		
REV	DESCRIPTION	EFFECTIVE DATE:
0	APPROVED FOR CONSTRUCTION	14 MAY 2002

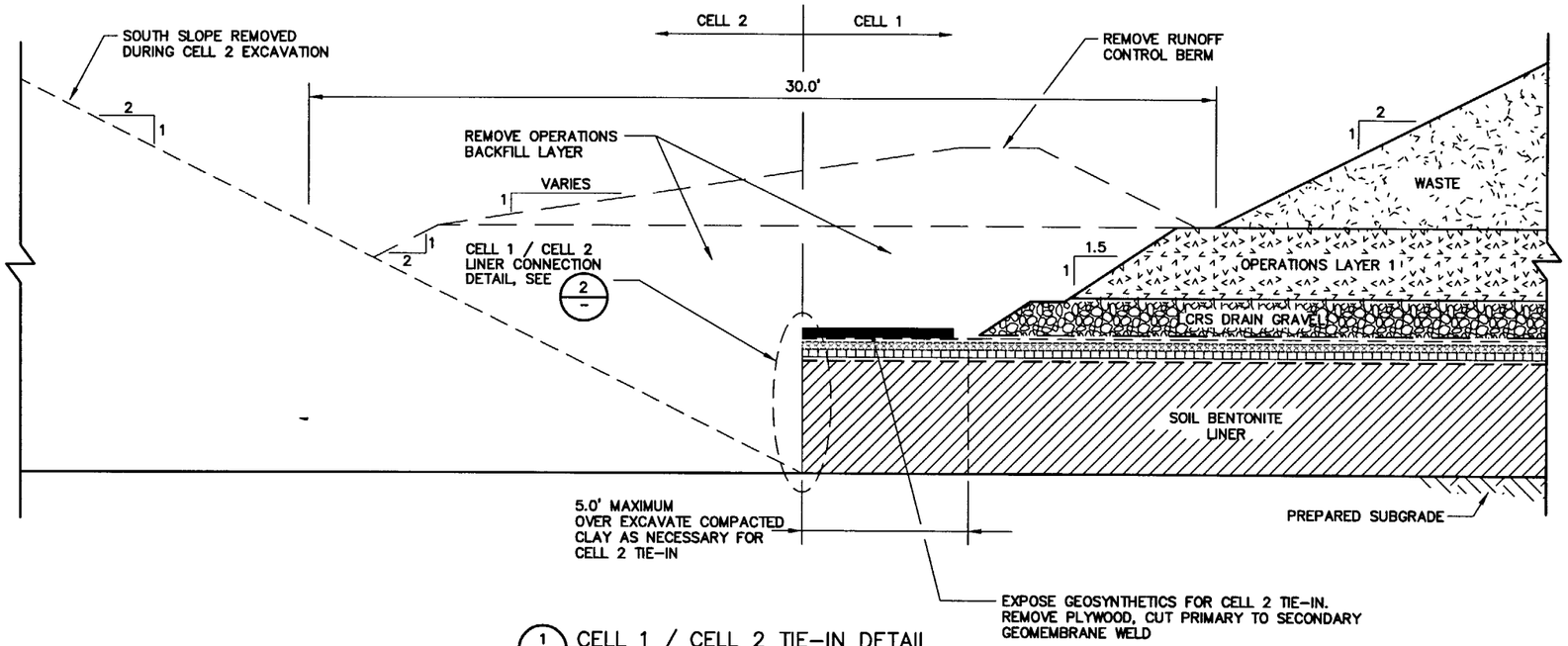

1/C-302 CELL 1 / CELL 2 TIE-IN DETAIL
NTS

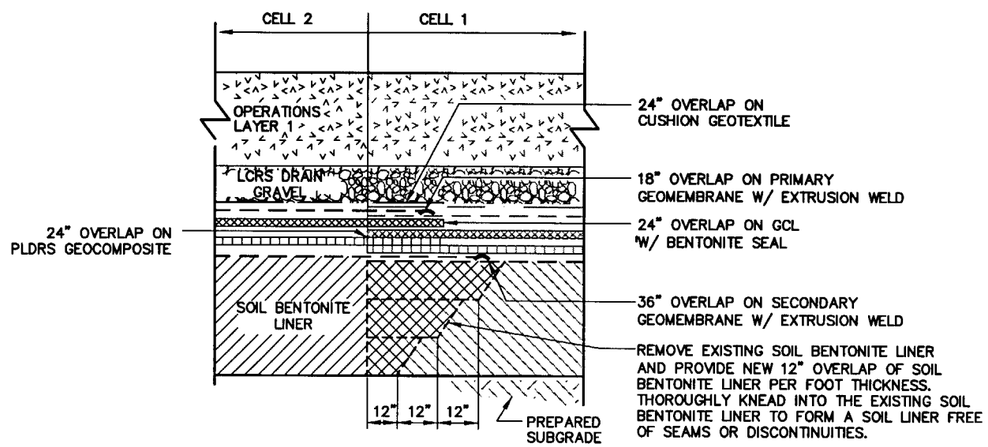

2/- CELL 1 / CELL 2 LINER CONNECTION DETAIL
NTS

PROFESSIONAL ENGINEER REGISTERED STATE OF IDAHO PHILLIP E. CROUSE 9144 5-7-02

SUBCONTRACT NO.	S01-588058
REQUESTER:	
DESIGN:	PHILLIP CROUSE
DRAWN:	NICOLE GONZALEZ
PROJECT NO.	
SPEC CODE	
FOR REVIEW/APPROVAL SIGNATURES SEE DAR NO.	DAR
EFFECTIVE DATE:	

INEEL (Idaho National Engineering & Environmental Laboratory) BECHTEL BWXT IDAHO, LLC

CH2MHILL MWH MONTGOMERY WATSON HARZA

INEEL CERCLA DISPOSAL FACILITY (ICDF)

CELL 2
SECTIONS AND DETAILS

SIZE	CAGE CODE	INDEX CODE NUMBER AREA	TYPE	CL	ORIG	DWG-	REV
D		B21	0100	02			0

SCALE: AS SHOWN | CPP | SHEET C-303

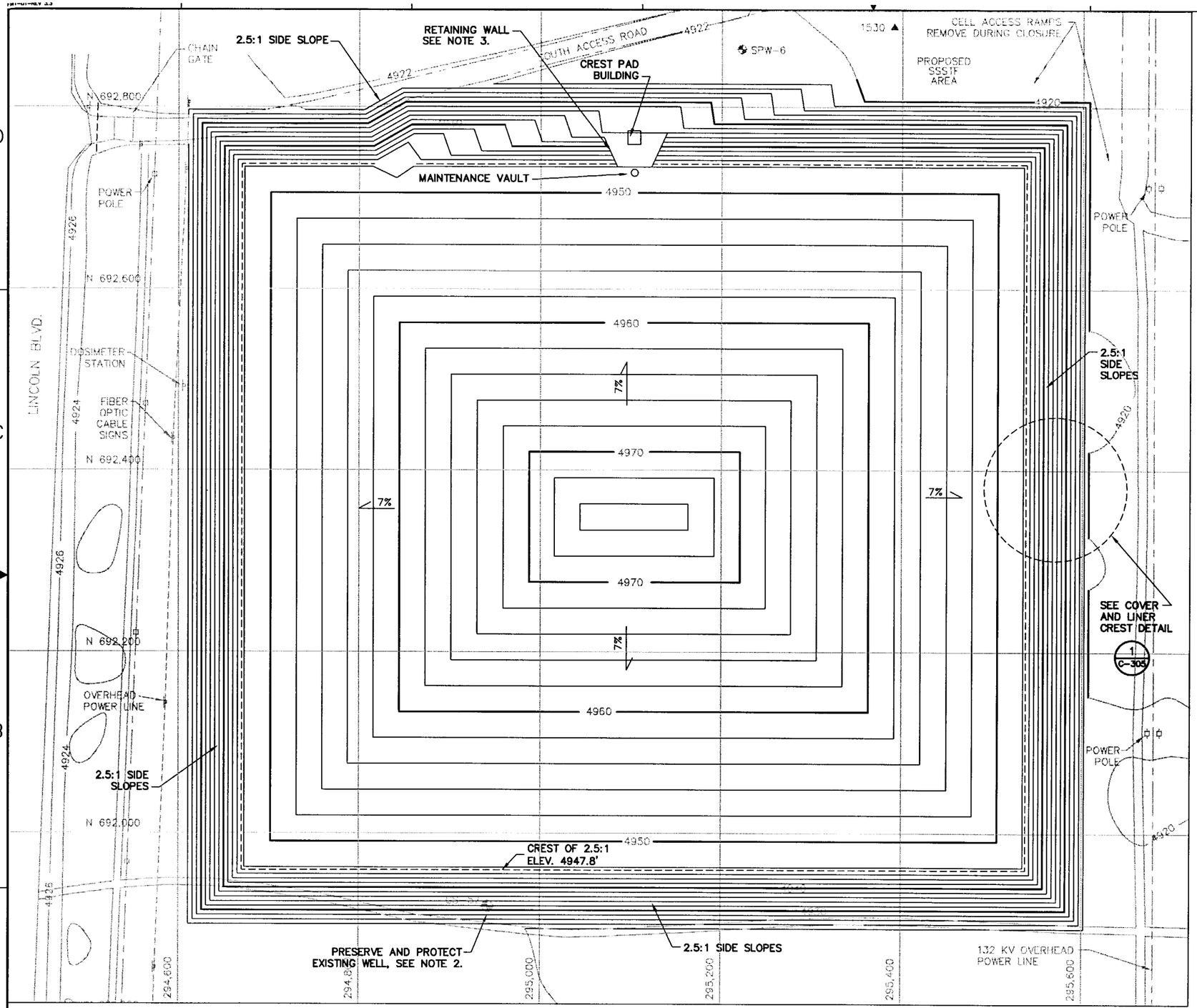

REVISIONS		
REV	DESCRIPTION	EFFECTIVE DATE:
0	APPROVED FOR CONSTRUCTION	14 MAY 2002

NOTES:

1. GRADES SHOWN ARE TOP OF FINAL COVER.
2. WELL USGS-57 IS LOCATED OUTSIDE OF THE CELL 2 PERIMETER EMBANKMENT, BUT FALLS WITHIN THE RIP RAP ARMOR OF THE COVER. EXTEND WELL AND PROTECTIVE CASING THROUGH RIP RAP TO PRESERVE AND PROTECT WELL AND ALLOW CONTINUED ACCESS FOR MONITORING.
3. PROVIDE ROCKERY RETANING WALL TO PROTECT EXISTING LANDFILL CREST PAD BUILDING DURING POST-CLOSURE OPERATION OF LEACHATE COLLECTION SYSTEM. ONCE LRCS OPERATION IS NO LONGER NECESSARY, WALL CAN BE REMOVED AND COVER SECTION CAN BE PLACED. ACCESS TO LEACHATE PIPING WOULD THEN BE PROVIDED BY MANTENANCE VAULT.

N

SCALE

60' 0 60' 120'

CONTOUR INTERVAL 2FT

PROFESSIONAL ENGINEER REGISTERED 9144 STATE OF IDAHO PHILLIP E. CROUSE 5-7-02

SUBCONTRACT NO.	S01-588058
REQUESTER:	
DESIGN:	PHILLIP CROUSE
DRAWN:	JANET BEVER
PROJECT NO.	
SPEC CODE	
FOR REVIEW/APPROVAL SIGNATURES SEE DAR NO.	DAR
EFFECTIVE DATE:	

INEEL Idaho National Engineering & Environmental Laboratory BECHTEL BWXT IDAHO, LLC

CH2MHILL MWH MONTGOMERY WATSON HARZA

INEEL CERCLA DISPOSAL FACILITY (ICDF)

CELL 1 AND CELL 2
FINAL COVER PLAN

SIZE	CAGE CODE	INDEX CODE NUMBER AREA	TYPE	CL	ORG	DWG-	REV
D		B21	0500	02			0

SCALE: AS SHOWN CPP SHEET C-304

REVISIONS		
REV	DESCRIPTION	EFFECTIVE DATE:
0	APPROVED FOR CONSTRUCTION	14 MAY 2002

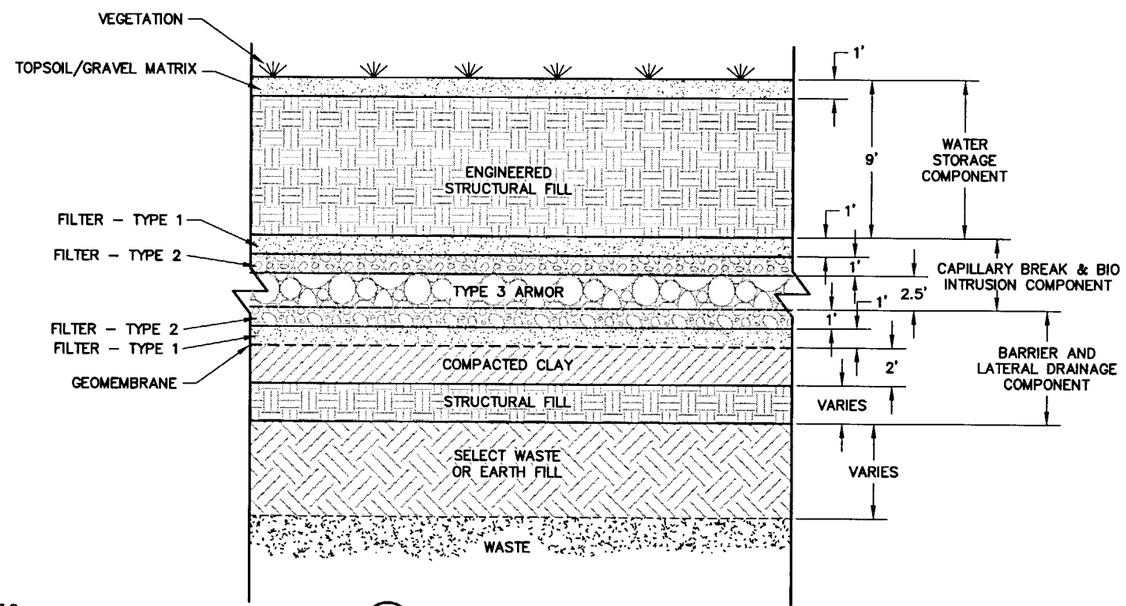

2 C-305 TYPICAL COVER DETAIL

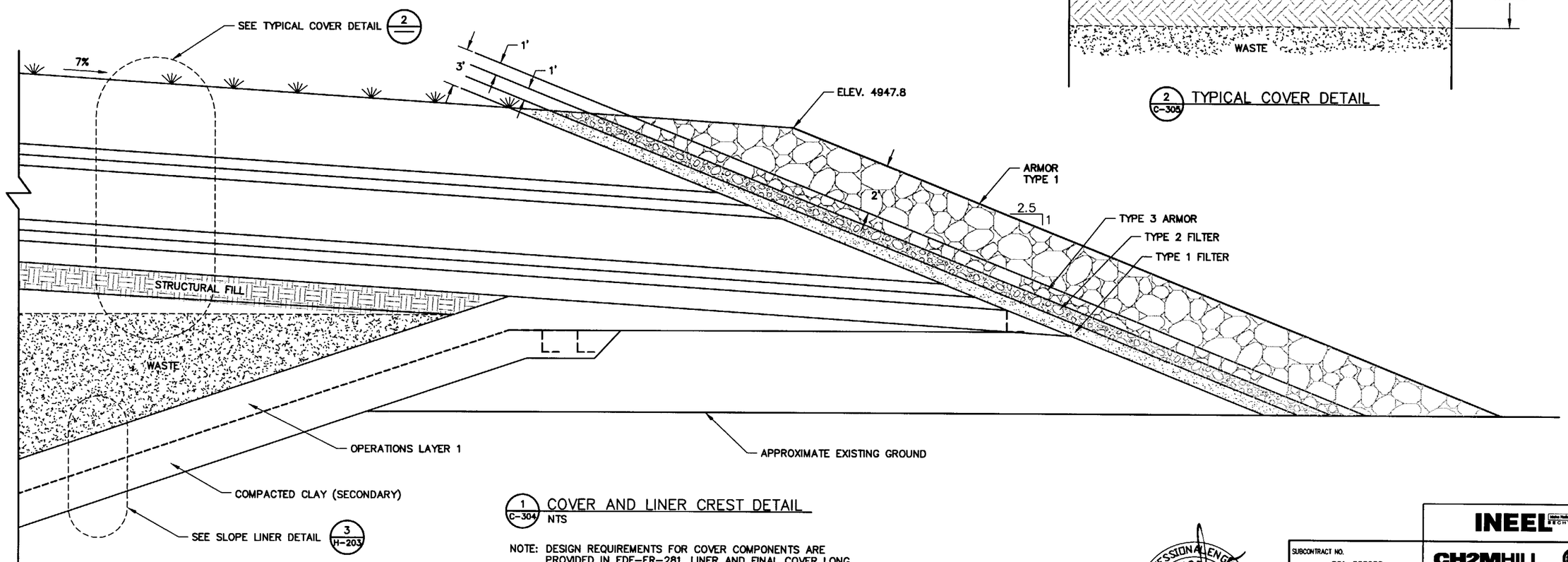

1 C-304 COVER AND LINER CREST DETAIL
NTS

NOTE: DESIGN REQUIREMENTS FOR COVER COMPONENTS ARE PROVIDED IN EDF-ER-281, LINER AND FINAL COVER LONG TERM PERFORMANCE EVALUATION AND FINAL COVER LIFE CYCLE EXPECTATION DESIGN STUDY.

PROFESSIONAL ENGINEER REGISTERED 9144 STATE OF IDAHO PHILLIP E. CROUSE 5-7-02

SUBCONTRACT NO.	S01-588058
REQUESTER:	
DESIGN:	PHILLIP CROUSE
DRAWN:	NICOLE GONZALEZ
PROJECT NO.	
SPEC CODE	
FOR REVIEW/APPROVAL SIGNATURES SEE DAR NO.	DAR
EFFECTIVE DATE:	

INEEL Idaho National Engineering & Environmental Laboratory BECHTEL BWXT IDAHO, LLC

CH2MHILL MWH MONTGOMERY WATSON HARZA

INEEL CERCLA DISPOSAL FACILITY (ICDF)

FINAL COVER
SECTIONS AND DETAILS

SIZE	CAGE CODE	INDEX CODE NUMBER AREA	TYPE	CL	ORIG	DWG-	REV
D		B21	0100	02			0

SCALE: AS SHOWN CPP SHEET C-305

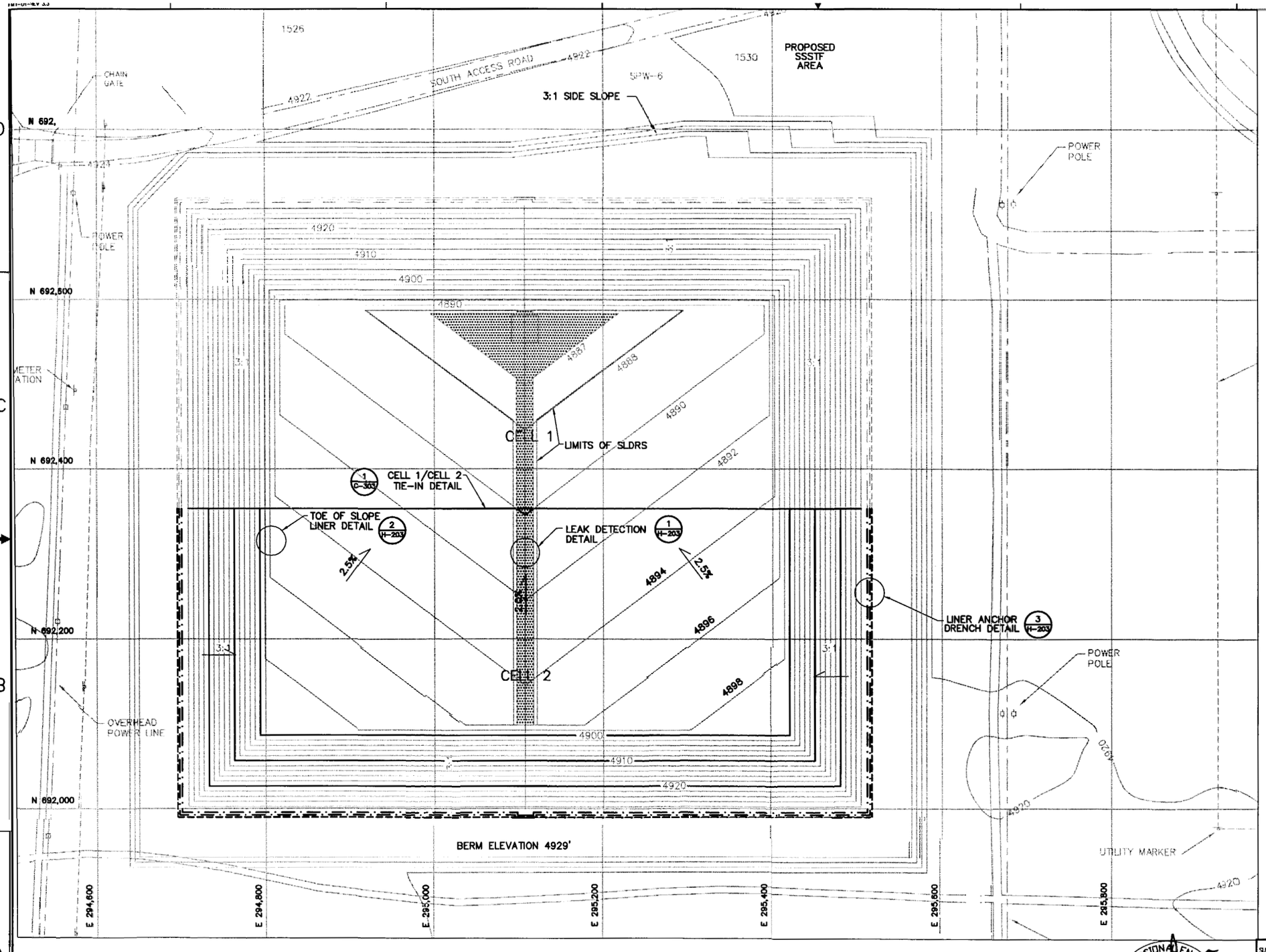

REVISIONS		
REV	DESCRIPTION	EFFECTIVE DATE:
0	APPROVED FOR CONSTRUCTION	14 MAY 2002

NOTES:

1. GRADES SHOWN ARE TOP OF PRIMARY GEOMEMBRANE.

N

SCALE

0' 0 60' 120'

CONTOUR INTERVAL 2FT

PROFESSIONAL ENGINEER REGISTERED 9144 STATE OF IDAHO PHILLIP E. CROUSE

Phillip E. Crouse 5-7-02

SUBCONTRACT NO.	S01-588058
REQUESTER:	
DESIGN:	PHILLIP CROUSE
DRAWN:	JULIE GATES
PROJECT NO.	
SPEC CODE	
FOR REVIEW/APPROVAL SIGNATURES SEE DAR NO.	DAR
EFFECTIVE DATE:	

INEEL (Idaho National Engineering & Environmental Laboratory) BECHTEL BWXT IDAHO, LLC

CH2MHILL MWH MONTGOMERY WATSON HARZA

INEEL CERCLA DISPOSAIL FACILITY (ICDF)

CELL 2
GEOSYNTHETICS LINIER SYSTEM PLAN

SIZE	CAGE CODE	INDEX CODE NUMBER AREA	TYPE	CL	ORIG	DWG-	REV
D		B21	0500	02			0

SCALE: AS SHOWN CPP SHEET H-301

REVISIONS		
REV	DESCRIPTION	EFFECTIVE DATE:
0	APPROVED FOR CONSTRUCTION	14 MAY 2002

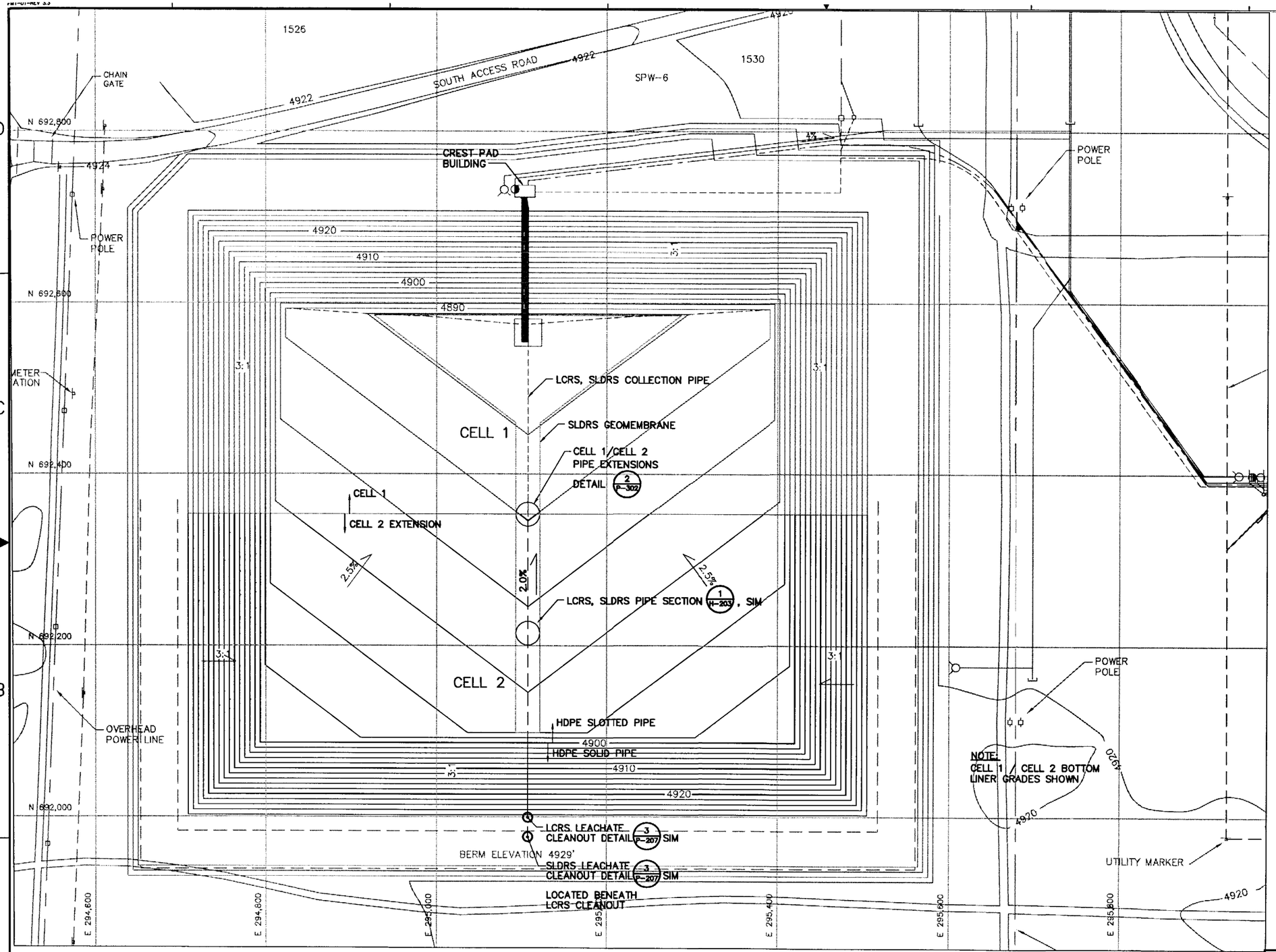

PROFESSIONAL ENGINEER REGISTERED 3755 STATE OF IDAHO LAWRENCE M. FETTRETHER 5/8/02

SUBCONTRACT NO.	S01-588058
REQUESTER:	
DESIGN:	BYRL THOMPSON
DRAWN:	JOSHUA PRETS
PROJECT NO.	
SPEC CODE	
FOR REVIEW/APPROVAL SIGNATURES SEE DAR NO.	DAR
EFFECTIVE DATE:	

INEEL (Idaho National Engineering & Environmental Laboratory) BECHTEL BWXT IDAHO, LLC

CH2MHILL MWH MONTGOMERY WATSON HARZA

INEEL CERCLA DISPOSAL FACILITY (ICDF)

CELL 2
LEACHATE COLLECTION PLAN

SIZE	CAGE CODE	INDEX CODE NUMBER AREA	TYPE	Q	DRG	DWG-	REV
D		B21	0500	02			0

SCALE: AS SHOWN CPP SHEET P-301

REVISIONS		
REV	DESCRIPTION	EFFECTIVE DATE:
0	APPROVED FOR CONSTRUCTION	14 MAY 2002

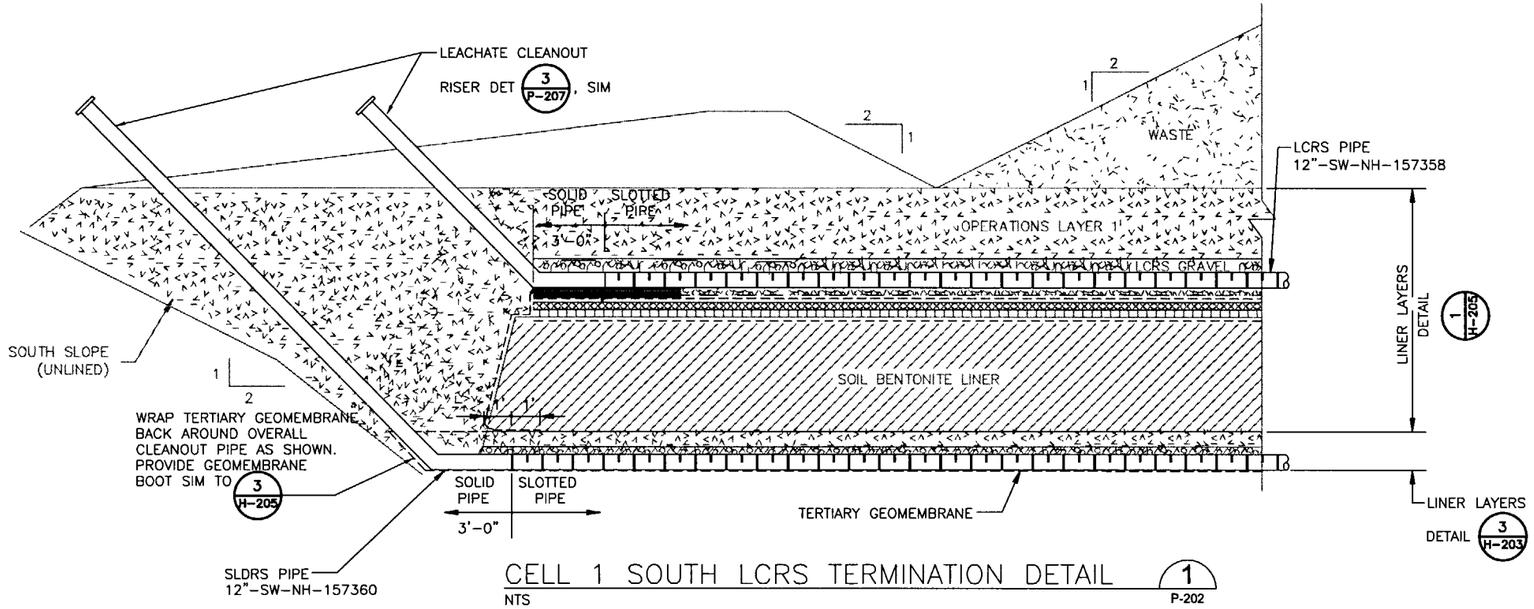

CELL 1 SOUTH LCRS TERMINATION DETAIL 1/P-202
NTS

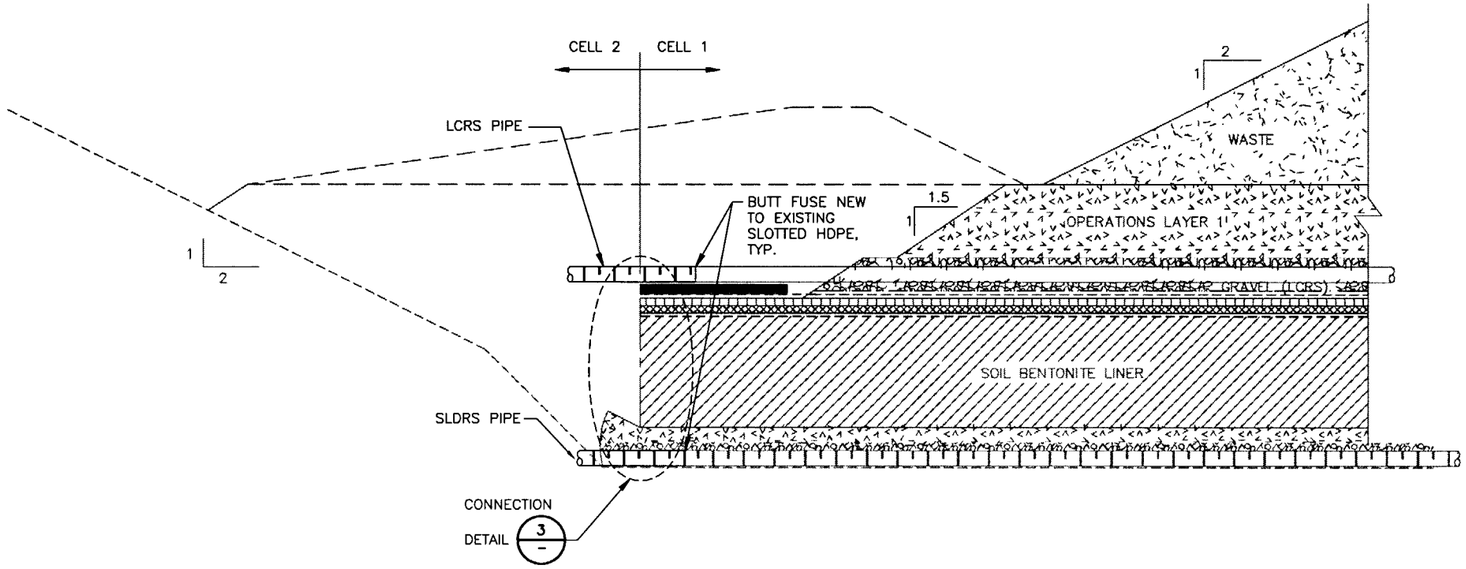

CELL 1 / CELL 2 LCRS TIE-IN DETAIL 2/P-301
NTS

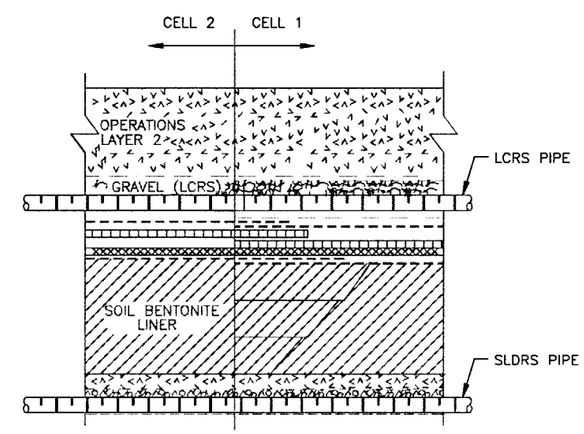

CELL 1 / CELL 2 LCRS CONNECTION DETAIL 3/-
NTS

NOTES:

1. SEE DWG H-205 FOR LINER CONNECTION DETAILS SHOWN SCREENED THIS DWG, TYPICAL.

PROFESSIONAL ENGINEER REGISTERED 3755 STATE OF IDAHO LAWRENCE M. FETTKETHER 5/8/02

SUBCONTRACT NO.	S01-588058
REQUESTER:	
DESIGN:	BYRL THOMPSON
DRAWN:	JOSHUA PRETS
PROJECT NO.	
SPEC CODE	
FOR REVIEW/APPROVAL SIGNATURES SEE DAR NO.	DAR
EFFECTIVE DATE:	

INEEL Idaho National Engineering & Environmental Laboratory BECHTEL BWXT IDAHO, LLC

CH2MHILL MWH MONTGOMERY WATSON HARZA

INEEL CERCLA DISPOSAL FACILITY (ICDF)

CELL 2
SECTIONS AND DETAILS

SIZE	CAGE CODE	INDEX CODE NUMBER AREA	TYPE	CL	ORIG	DWG-	REV
D		B21	0100	02			0

SCALE: AS SHOWN CPP SHEET P-302

Appendix AA

Project Schedule and Assumptions

Appendix AA

Schedule and Assumptions

The schedule on the following page (Figure AA-1) identifies the major activities associated with the INEEL CERCLA Disposal Facility (ICDF) Complex construction and start-up activities forecast for the next 2 years. Beginning in FY 2002, the Staging, Storage, Sizing, and Treatment Facility (SSSTF) and the ICDF projects will be synchronized as one construction project providing a complete facility for the performance of all Comprehensive Environmental Response, Compensation, and Liability Act (CERCLA) activities identified in their respective remedial design/construction (RD/CWP) work plans. Start-up preparations and associated readiness tasks will also be integrated activities to ensure overall operational safety and practical capability.

The scheduling assumptions below define the basic context of the schedule and, as such, any circumstances that change those assumptions will necessarily have to be evaluated to determine the impact to the planned activities.

AA-1. SCHEDULING ASSUMPTIONS

1. The following schedule is based on adequate funding.

2. ICDF Complex operations will begin following completion of the Agency Final Inspection and prior to submittal of the Remedial Action (RA) Report.

3. Work scope is based on Department of Energy (DOE) planning level funds as of October 1, 2001.

4. Schedule is subject to revision upon award of construction subcontracts to align with the subcontractors schedule of values. Also, the schedule may be subject to revision due to weather conditions, other conditions not controllable by DOE, or availability of Agency personnel.

5. All activities are subject to change based upon coordinating an overall complex schedule and incorporating the ability to combine joint work scope.

6. No resource limitations other than the noted funding are anticipated.

7. A Formal Operational Readiness Review (Nuclear Facility) is not required.

8. No extensions, from any parties, to the RD/CWP Work Plans and ICDF Complex RA Work Plan review schedule are included.

9. No schedule contingency is included for interruptions caused by litigation.

10. No schedule contingency is included for interruptions caused by union disagreements or conflicts.

11. The RA Report is a primary deliverable and the submittal date, as stipulated in the FFA/CO, is within 60 days after the final inspection has been completed.

12. A schedule will be provided in the ICDF RA Work Plan that addresses the operational life of the ICDF Complex. This schedule will identify and establish target dates for submittal of RA secondary documents, including the operational O&M Report, ICDF Decontamination and

Decommissioning Plan with landfill and evaporation pond closure plans, and post-closure O&M plan.

ICDF Schedule

ID	Task Name	Duration	Start	Finish
1	**ICDF Remedial Design/Construction Work Plan (RD/CWP)**	**69 days**	**Thu 2/7/02**	**Tue 5/14/02**
2	Comments received from the EPA and IDEQ on Draft ICDF RD/RA WP	0 days	Thu 2/7/02	Thu 2/7/02
3	Resolution of EPA and IDEQ comments on Draft ICDF RD/RA WP	46 days	Thu 2/7/02	Thu 4/11/02
4	Draft Final ICDF RD/CWP submitted to EPA and IDEQ	0 days	Fri 4/12/02	Fri 4/12/02
5	EPA and IDEQ review Draft Final ICDF RD/CWP	12 days	Fri 4/12/02	Mon 4/29/02
6	Resolution of EPA and IDEQ comments on Draft Final ICDF RD/CWP	11 days	Tue 4/30/02	Tue 5/14/02
7	Submit Final ICDF RD/CWP to EPA and IDEQ	0 days	Tue 5/14/02	Tue 5/14/02
8	**ICDF Construction**	**203 days**	**Tue 2/26/02**	**Thu 12/5/02**
9	Mobilize Equipment and Personnel for Screening Operations	9 days	Tue 2/26/02	Fri 3/8/02
10	Screening Operations	40 days	Mon 3/11/02	Fri 5/3/02
11	Mobilize Equipment and Personnel for Phase 2 Construction	9 days	Fri 4/12/02	Wed 4/24/02
12	Install Groundwater Monitoring Wells	100 days	Thu 6/6/02	Wed 10/23/02
13	Install Sediment and Erosion Controls	30 days	Thu 5/2/02	Wed 6/12/02
14	Clear, Grub, and Strip Borrow Area	22 days	Thu 5/16/02	Fri 6/14/02
15	Construct Raw/Fire Water System	35 days	Thu 9/5/02	Wed 10/23/02
16	Construct Electrical Power Supply System	35 days	Thu 9/5/02	Wed 10/23/02
17	Install Site Instrumentation System	38 days	Thu 9/26/02	Mon 11/18/02
18	Construct Side Slope Test Pad	15 days	Thu 4/25/02	Wed 5/15/02
19	ICDF Landfill Vadose Zone Monitoring Construction	32 days	Thu 4/25/02	Fri 6/7/02
20	Place ICDF Landfill Clay Liner	77 days	Thu 5/16/02	Fri 8/30/02
21	Place ICDF Landfill Secondary HDPE Geomembrane	30 days	Mon 7/29/02	Fri 9/6/02
22	Construct ICDF Crest Pad Building	43 days	Mon 8/5/02	Wed 10/2/02
23	Place ICDF PLDRS Geomembrane	30 days	Thu 8/8/02	Wed 9/18/02
24	Place ICDF Landfill Primary GCL	30 days	Mon 8/19/02	Fri 9/27/02
25	Place ICDF Landfill HDPE Primary Geomembrane	31 days	Thu 8/29/02	Thu 10/10/02
26	Place ICDF Landfill Geotextile Cushion	30 days	Fri 9/13/02	Thu 10/24/02
27	Place ICDF Landfill LCRS Drain Gravel	29 days	Fri 9/27/02	Wed 11/6/02
28	Place ICDF Landfill Leachate Collection Piping	29 days	Fri 9/27/02	Wed 11/6/02
29	Place ICDF Landfill Operations Layer	50 days	Fri 9/27/02	Thu 12/5/02
30	ICDF Landfill construction complete	0 days	Thu 12/5/02	Thu 12/5/02
31	Excavate Evaporation Pond (Additional 3 ft)	32 days	Thu 5/16/02	Fri 6/28/02

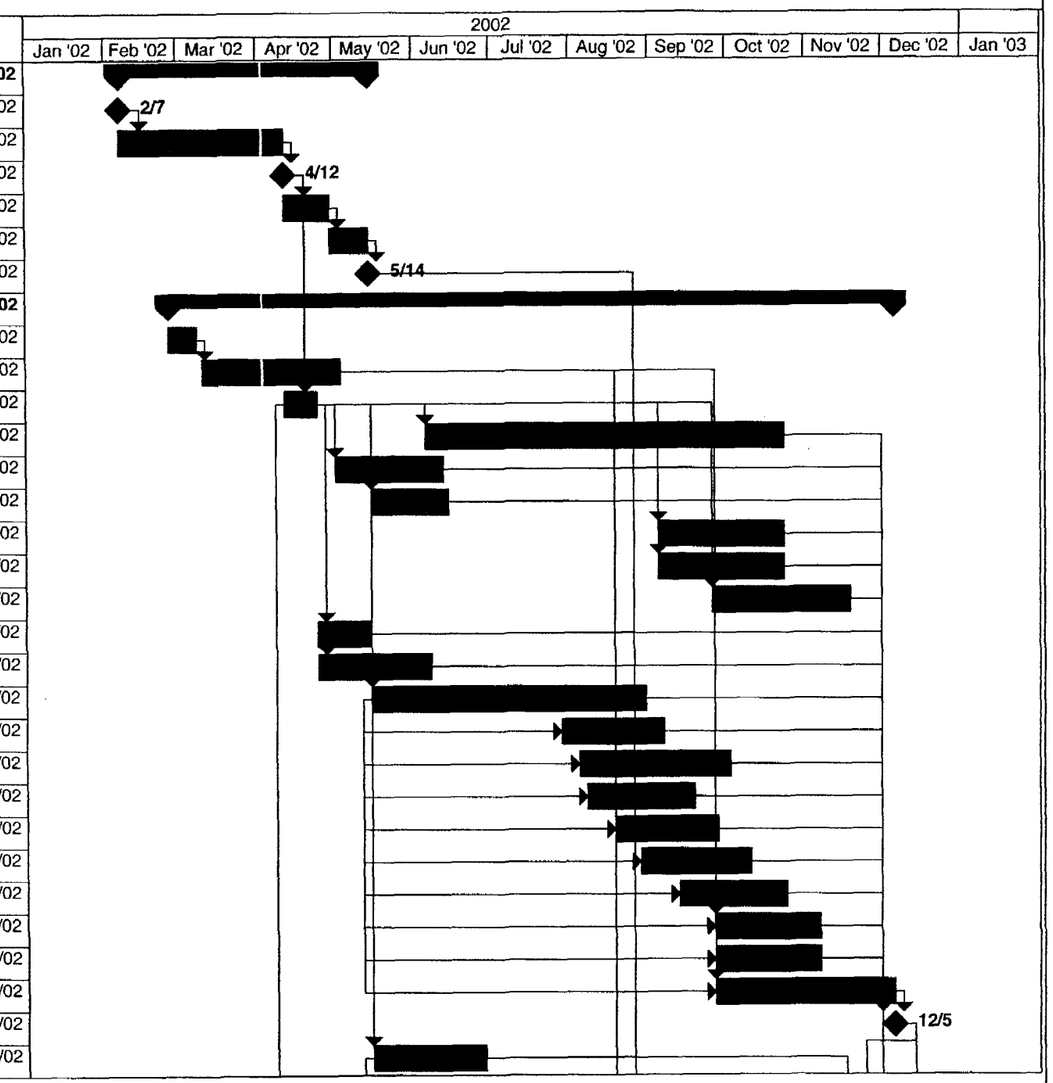

Project: ICDF Schedule
Date: Wed 4/3/02

Task | Progress | Milestone | Summary | Rolled Up Task | Rolled Up Milestone | Rolled Up Progress | Split | External Tasks | Project Summary | Group By Summary

Page 1

Figure AA-1. ICDF schedule.

ICDF Schedule

ID	Task Name	Duration	Start	Finish
32	Place Evaporation Pond Base Soil (Rye Grass Flats)	29 days	Mon 6/3/02	Thu 7/11/02
33	Place Evaporation Pond GCL	25 days	Mon 7/29/02	Fri 8/30/02
34	Place Evaporation Pond Secondary Geomembrane	25 days	Mon 8/5/02	Fri 9/6/02
35	Construct Evaporation Pond Crest Pad Building	43 days	Mon 8/5/02	Wed 10/2/02
36	Place Evaporation Pond Geotextile Cushion	25 days	Mon 8/12/02	Fri 9/13/02
37	Place Evaporation Pond LDRS Drain Gravel/Ops Layer	33 days	Mon 8/19/02	Wed 10/2/02
38	Place Evaporation Pond Leachate Collection Piping	26 days	Thu 9/5/02	Thu 10/10/02
39	Place Evaporation Pond Primary GCL	30 days	Fri 9/13/02	Thu 10/24/02
40	Place Evaporation Pond Primary Geomembrane	30 days	Fri 9/27/02	Thu 11/7/02
41	Place Evaporation Pond Sacrificial Geomembrane	30 days	Fri 10/11/02	Thu 11/21/02
42	Evaporation Pond construction complete	0 days	Thu 11/21/02	Thu 11/21/02
43	Reclaimation of ICDF and RGF	33 days	Tue 10/22/02	Thu 12/5/02
44	Place Surface Course for Roads	25 days	Fri 11/1/02	Thu 12/5/02
45	Construction Complete	0 days	Thu 12/5/02	Thu 12/5/02
46	**Construction Prefinal Inspections**	**25 days**	**Fri 11/22/02**	**Thu 12/26/02**
47	Develop Prefinal Inspection Checklist	10 days	Fri 11/22/02	Thu 12/5/02
48	Conduct Prefinal Inspection Checklist Walkdown	5 days	Fri 12/6/02	Thu 12/12/02
49	Publish Prefinal Inspection Checklist Report	10 days	Fri 12/13/02	Thu 12/26/02
50	**ICDF Complex Remedial Action Work Plan (RA WP)**	**224 days**	**Tue 2/12/02**	**Fri 12/20/02**
51	Develop ICDF Complex RA WP	135 days	Tue 2/12/02	Mon 8/19/02
52	Submit Draft ICDF Complex RA WP to EPA and IDEQ	0 days	Mon 8/19/02	Mon 8/19/02
53	EPA and IDEQ review Draft ICDF Complex RA WP	33 days	Tue 8/20/02	Thu 10/3/02
54	Resolution of EPA and IDEQ comments on Draft ICDF Complex RA WP	33 days	Fri 10/4/02	Tue 11/19/02
55	Submit Draft Final ICDF Complex RA WP to EPA and IDEQ	0 days	Tue 11/19/02	Tue 11/19/02
56	EPA and IDEQ review Draft Final ICDF Complex RA WP	12 days	Wed 11/20/02	Thu 12/5/02
57	Resolution of EPA and IDEQ comments on Draft Final ICDF Complex RA WP	11 days	Fri 12/6/02	Fri 12/20/02
58	Submit Final ICDF Complex RA WP to EPA and IDEQ	0 days	Fri 12/20/02	Fri 12/20/02
59	**ICDF Complex Startup**	**0 days**	**Thu 12/26/02**	**Thu 12/26/02**
60	to be presented in the ICDF Complex RA WP	0 days	Thu 12/26/02	Thu 12/26/02
61	**ICDF Complex Remedial Action Report**	**0 days**	**Thu 12/26/02**	**Thu 12/26/02**
62	to be presented in the ICDF Complex RA WP	0 days	Thu 12/26/02	Thu 12/26/02

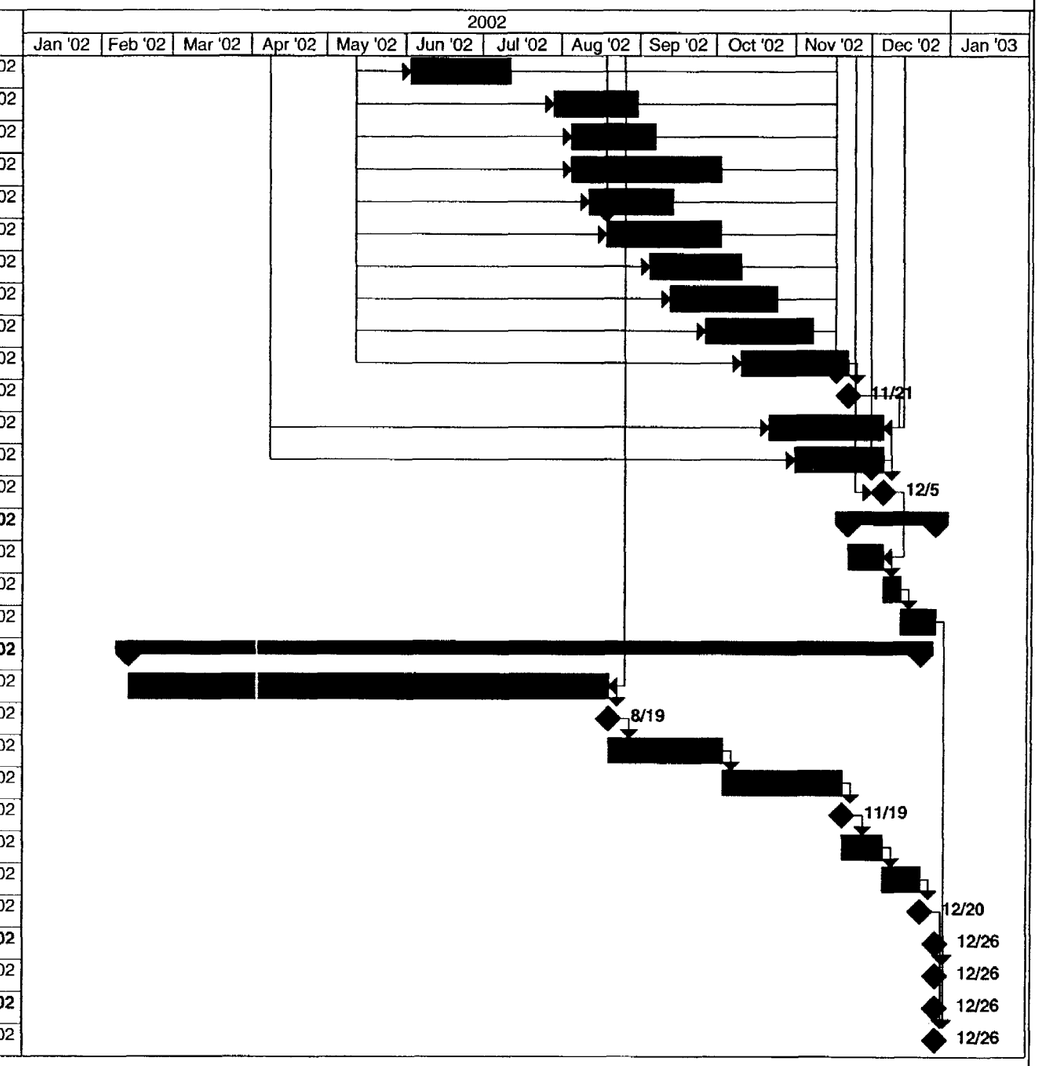

Project: ICDF Schedule
Date: Wed 4/3/02

Task | Progress | Milestone | Summary | Rolled Up Task | Rolled Up Milestone | Rolled Up Progress | Split | External Tasks | Project Summary | Group By Summary

Page 2

Figure AA-1. (continued).

Appendix BB

Detailed Cost Estimate

Appendix BB

Detailed Cost Estimate

To prepare the detailed cost estimate for the INEEL CERCLA Disposal Facility project, the following information is the basis for the cost estimate.

SCOPE OF WORK: Brief description of the proposed project.

The scope of this project is to complete the remaining 2002 work on the ICDF.

BASIS OF THE ESTIMATE: Drawings, Design Report, Engineers' Notes and/or other documentation upon which the estimate is originated.

A. CH2M HILL 90% design drawings and specifications

B. TEREX Earth Moving Handbook

C. Caterpillar Handbook

D. Means Cost Data

E. Richardson Estimating Manual

F. Previous approved for construction (AFC) estimate

ASSUMPTIONS: Conditions statements accepted or supposed true without proof of demonstration. An assumption has a direct impact on total estimated cost.

A. Work to be performed in 2002.

B. Work will be performed by a contractor familiar with construction at the Idaho National Engineering and Environmental Laboratory (INEEL).

C. No hazardous or contaminated material will be encountered.

D. All radiological technicians and environmental, safety, and quality support will be available to support the work.

E. No costs have been included to decontaminate, clean, or replace any equipment.

F. INEEL Site-specific training required by the contract is not included.

G. Costs for Conduct of Operations/Conduct of Maintenance are included.

H. Entire fence will not have to be grounded, only the portion of the fence near the power lines.

I. Roads will be paved with 4 in. of AC over 6 in. of base.

J. No costs have been included for any controls to be run back to the Staging, Storage, Sizing, and Treatment Facility.

K. Evaporation pond structural fill is 1 ft of material from Rye Grass Flats to protect the secondary membrane from the rocks.

L. All pipe inside the crest buildings is carbon steel.

M. All fire protection pipe is PVC.

N. All other pipe is HDPE.

((TINGENCY GUIDELINE IMPLEMENTATION: *The percentage used for contingency as termined by the contingency allowance guidelines can be altered to reflect the type of construction and conditions that may impact the total estimated cost.*

A 6% contingency has been included in the estimate[1]. This is within the acceptable range for an estimate at 90% design where detailed design has been completed and used for the cost estimate. The activities with the largest contingency are as follows:

- Equipment mobilization
- Utility excavation and fill
- Concrete
- Finish painting
- Landfill pipe and pumps
- Evaporation pond crest building piping
- All electrical.

OTHER COMMENTS/CONCERNS SPECIFIC TO THE ESTIMATE:

A. Costs on the detailed cost sheets are direct costs and do not include overhead, profit, or escalation for the construction subcontractor.

B. Each major activities cost has been escalated to the midpoint of that activity on the summary sheets.

C. Ten percent has been added to all work activities to spread direct supervision and quality assurance/quality control costs back into the work.

---

1. Contingency decreases for each stage of a project at which the cleanup estimate is prepared. For the detailed design phase, contingency is typically +/- 10%.

The Table BB-1 summarizes the construction cost estimate for the remainder of construction for ICDF. The estimate construction cost is $6,897,942.

One further cost comparison is provided in this section. A comparison is made between the estimated cost in the Feasibility Study (DOE-ID 1998) to the same cost in the Remedial Design/Construction Work Plan (RD/CWP). The estimated cost for the ICDF project has been reduced by approximately $32 million as detailed in Table BB-2. The cost of on-Site disposal at the ICDF Complex has been significantly reduced from the estimate in the Feasibility Study (FS) Supplement Report (DOE-ID 1998), on which the Operable Unit 3-13 Record of Decision was based. The current estimate for on-Site disposal at the ICDF Complex is $79.6M, which includes design, construction, operation, closure, and long-term monitoring. The most significant scope change is that minimal treatment facilities will be constructed and operated at the ICDF Complex instead of a complex treatment system capable of treating 20,000 yd^3/yr. The complex treatment system was planned to treat a wide variety of wastes using several treatment processes. The minimal treatment facility will use one treatment process.

The estimated costs are summarized for on-Site and off-Site disposal (Hain 2001) as follows. The off-Site disposal cost is estimated to cost $465M and, based upon disposal of 510,000 yd^3, the cost of disposal is $911/$yd^3$. The on-Site disposal cost is $79.6M and, based upon the same volume, the cost of disposal is $156/$yd^3$. On-Site disposal costs are $385.4M less than off-Site disposal while the estimated cost per cubic yard is $755/$yd^3$ less for on-Site disposal. Effective July 1, 2001, Utah began issuing permits and assessing fees to generators for accessing Utah radioactive waste disposal facilities (Rule R313-26). The annual fee for generators who generate more than 1,000 ft^3 is $1,300. If INEEL wastes were shipped to Utah over a 15-year time frame, the off-Site disposal cost would increase $19,500 or $0.04/$yd^3$.

REFERENCES:

DOE-ID, 1998. *Comprehensive RI/FS for the Idaho Chemical Processing Plant OU 3-13 at the INEEL-Part B, FS Supplement Report*, Volume 2, Appendix A, DOE/ID-10619, Revision 2, October 1998.

Hain, 2001, Kathleen Hain, Manager Environmental Restoration Program, Department of Energy, Idaho Operations Office, to, Wayne Pierre, Environmental Cleanup Office, U.S. Environmental Protection Agency, Region X and Dean Nygard, Idaho Department of Environmental Quality, Date, October 3, 2001, Subject, "On-Site Versus Off-Site Soil and Debris Disposal Cost Comparison," Enclosure: *On-site Versus Off-Site Soil and Debris Disposal Comparison for the ICDF Complex*, October 2001.

Rule R313-26, 2001, "Generator Site Access Permit Requirements for Accessing Utah Radioactive Waste Disposal Facilities," Utah Administrative Code, Environmental Quality, September 2001.

Table BB-1. ICDF Phase II construction cost summary.

Description	Direct Cost ($)	Sales Tax ($)	Sub Overhead ($)	Escalation ($)	Contingency ($)	Total Cost ($)
Install sediment & erosion control	9,129	78	4,878	338	1,154	15,577
Clear, grub & strip borrow area	21,744	0	11,587	800	2,730	36,861
Place ICDF structural fill	85,777	1,838	46,687	3,223	11,002	148,527
Place ICDF HDPE geomembrane	155,351	5,466	110,742	6,517	22,246	300,322
Place ICDF composite drainage net	104,335	2,915	73,855	4,347	14,836	200,288
Place evaporation pond clay liner	125,057	2,767	88,023	5,180	17,682	238,709
Revegetation	10,522	240	5,735	396	1,351	18,244
Site cleanup	12,754	0	6,796	469	1,602	21,621
Install monitoring & control systems	6,898	250	3,809	263	1,306	12,526
Subcontractor mobilization	38,192	0	11,294	1,188	10,135	60,809
Place ICDF clay liner	330,788	7,288	232,807	13,701	46,767	631,351
Place ICDF secondary HDPE	155,351	5,466	110,742	6,517	22,246	300,322
Place ICDF composite drainage net	104,335	2,915	73,855	4,347	14,836	200,288
Place ICDF primary clay liner	391,669	640	209,052	14,433	49,263	665,057
Place ICDF leachate drainage gravel	115,392	4,800	64,047	4,422	15,093	203,754
Place leachate collection piping & pumps	46,483	1,042	28,492	1,824	6,227	84,068
Place ICDF landfill operations layer	251,020	2,915	152,020	9,743	33,256	448,954
Construct ICDF crest pad building	89,060	3,111	53,143	3,488	14,670	163,472
Place evaporation pond secondary liner	59,003	2,076	42,062	2,475	8,449	114,065
Place evaporation pond composite drainage net	79,253	2,214	56,101	3,302	11,270	152,140
Construct evaporation pond crest building	44,943	1,279	25,595	1,724	8,649	82,190
Place evaporation pond primary HDPE	118,005	4,152	84,120	4,951	16,898	228,126

Table BB-1. (continued).

Description	Direct Cost ($)	Sales Tax ($)	Sub Overhead ($)	Escalation ($)	Contingency ($)	Total Cost ($)
Construct lechate transfer facility	34,841	743	19,292	1,317	6,602	62,795
Install electrical power systems	82,951	739	45,885	3,110	14,520	147,205
Install raw water system	175,166	1,539	99,381	6,626	22,617	305,329
Place surface course for roads	132,794	1,100	71,349	4,926	16,814	226,983
Install perimeter fence	129,896	3,828	71,258	4,920	16,902	226,804
Install groundwater monitoring wells	1,410,584	0	0	0	190,972	1,601,555
Total ICDF Phase II						**$6,897,942**

Table BB-2. Cost comparison between feasibility study and RD/CWP.

Cost Element	Feasibility Study Estimated Cost (DOE-ID 1998)	RD/CWP Estimated Cost (Hain 2001)
Capital	$91,955,000	$31,627,000
Design	$6,898,000	$8,451,000
Construction	$85,057,000	$23,176,000
Operations total	$11,514,000	$21,486,000
Closure total	NA[a]	$9,969,000
Post-closure total	$8,213,000	$7,995,000
Other cost total[b]	NA[a]	$8,550,000
Total	$111,682,000	$79,627,000
Difference	$32,055,000	

a. N/A = Not included in Feasibility Study cost estimate.

b. Other costs include program management necessary to implement a project at the INEEL for a duration of 100 years.

Project Name:
ICDF Phase II
Project Location: ***INTEC***
Estimate Number: ***2448-D***

DIA CUSTOM GROUPING REPORT 2T

Client: ***D. K. Vernon***
Prepared By: ***J. C. Grenz***
Estimate Type: ***Project Support***

LEVEL	Org/Subcontractor	QTY	Hrs	Crew/Rate	Labor	Const Eqp	Matl	S/C	Other	TOTAL*
- CB6706										
-- **WBS 9102.1.01**										
	DIRT	U.C. per hr	2	CN-LABR	63.16	0	0	0	0	63.16
Labor		120.00	240	$31.58	$7,579	$0	$0	$0	$0	$7,579
	DIRT	U.C. per lf			0	0	0.5	0	0	0.5
Silt Fence		3,000.00	0		$0	$0	$1,500	$0	$0	$1,500
		U.C. per ea			0	0	0.5	0	0	0.5
Straw bales		100.00	0		$0	$0	$50	$0	$0	$50
Subtotal WBS 9102.1.01					$7,579	$0	$1,550	$0	$0	$9,129
Sales Tax					$0	$0	$78	$0	$0	$78
INEEL Org Labor/Subcontractor Overheads					$4,039	$0	$839	$0	$0	$4,878
Escalation					$279	$0	$59	$0	$0	$338
Contingency					$952	$0	$202	$0	$0	$1,154
-- Total WBS 9102.1.01			**240**		**$12,849**	**$0**	**$2,728**	**$0**	**$0**	**$15,577**
Subtotal CB6706					$7,579	$0	$1,550	$0	$0	$9,129
Sales Tax					$0	$0	$78	$0	$0	$78
INEEL Org Labor/Subcontractor Overheads					$4,039	$0	$839	$0	$0	$4,878
Escalation					$279	$0	$59	$0	$0	$338
Contingency					$952	$0	$202	$0	$0	$1,154
- Total CB6706			240		$12,849	$0	$2,728	$0	$0	$15,577

Project Name:
ICDF Phase II
Project Location: ***INTEC***
Estimate Number: ***2448-D***

DIA CUSTOM GROUPING REPORT 2T

Client: ***D. K. Vernon***
Prepared By: ***J. C. Grenz***
Estimate Type: ***Project Support***

LEVEL	Org/Subcontractor	QTY	Hrs	Crew/Rate	Labor	Const Eqp	Matl	S/C	Other	TOTAL*
- CB6707										
-- **WBS 9102.1.02**										
	DIRT	U.C. per ac			199.2	344.4	0	0	0	543.6
Clear & Grub		40.00	0		$7,968	$13,776	$0	$0	$0	$21,744
Subtotal WBS 9102.1.02					$7,968	$13,776	$0	$0	$0	$21,744
Sales Tax					$0	$0	$0	$0	$0	$0
INEEL Org Labor/Subcontractor Overheads					$4,246	$7,341	$0	$0	$0	$11,587
Escalation					$293	$507	$0	$0	$0	$800
Contingency					$1,001	$1,730	$0	$0	$0	$2,730
-- Total WBS 9102.1.02					**$13,508**	**$23,354**	**$0**	**$0**	**$0**	**$36,861**
Subtotal CB6707					$7,968	$13,776	$0	$0	$0	$21,744
Sales Tax					$0	$0	$0	$0	$0	$0
INEEL Org Labor/Subcontractor Overheads					$4,246	$7,341	$0	$0	$0	$11,587
Escalation					$293	$507	$0	$0	$0	$800
Contingency					$1,001	$1,730	$0	$0	$0	$2,730
- Total CB6707					$13,508	$23,354	$0	$0	$0	$36,861

Project Name:
ICDF Phase II
Project Location: ***INTEC***
Estimate Number: ***2448-D***

DIA CUSTOM GROUPING REPORT 2T

Client: ***D. K. Vernon***
Prepared By: ***J. C. Grenz***
Estimate Type: ***Project Support***

LEVEL	Org/Subcontractor	QTY	Hrs	Crew/Rate	Labor	Const Eqp	Matl	S/C	Other	TOTAL*
- CB6709										
-- **WBS 9102.2.10**										
	DIRT	U.C. per hr	1	00E0912	0	65.87	0	0	0	65.87
Grader		80.00	80		$0	$5,270	$0	$0	$0	$5,270
00E0612	DIRT	U.C. per hr	1	00E0612	0	101.35	0	0	0	101.35
Cat 825 Sheepsfoot		80.00	80		$0	$8,108	$0	$0	$0	$8,108
00E2052	DIRT	U.C. per hr	1	00E2052	0	126.77	0	0	0	126.77
10000 gal Water Wagon		80.00	80		$0	$10,142	$0	$0	$0	$10,142
	DIRT	U.C. per hr	4	CN-EQMD	139	0	0	0	0	139
Operator & Grade Checker		80.00	320	$34.75	$11,120	$0	$0	$0	$0	$11,120
	DIRT	U.C. per hr	2	CN-LABR	63.16	0	0	0	0	63.16
Labor		80.00	160	$31.58	$5,053	$0	$0	$0	$0	$5,053
Subtotal WBS 9102.2.10					$16,173	$23,519	$0	$0	$0	$39,692
Sales Tax					$0	$0	$0	$0	$0	$0
INEEL Org Labor/Subcontractor Overheads					$8,618	$12,533	$0	$0	$0	$21,151
Escalation					$595	$865	$0	$0	$0	$1,460
Contingency					$2,031	$2,953	$0	$0	$0	$4,984
-- Total WBS 9102.2.10			**480**		**$27,417**	**$39,871**	**$0**	**$0**	**$0**	**$67,287**
-- **WBS 9102.2.11**										
	DIRT	U.C. per cy			0.66	0.94	15	0	0	16.6
Load and Haul Select Material		2,450.00	0		$1,617	$2,303	$36,750	$0	$0	$40,670

Project Name:
ICDF Phase II
Project Location: ***INTEC***
Estimate Number: ***2448-D***

DIA CUSTOM GROUPING REPORT 2T

Client: ***D. K. Vernon***
Prepared By: ***J. C. Grenz***
Estimate Type: ***Project Support***

LEVEL	Org/Subcontractor	QTY	Hrs	Crew/Rate	Labor	Const Eqp	Matl	S/C	Other	TOTAL*
	DIRT	U.C. per cy			1.01	1.2	0	0	0	2.21
Spread and Compact		2,450.00	0		$2,475	$2,940	$0	$0	$0	$5,415
Subtotal WBS 9102.2.11					$4,092	$5,243	$36,750	$0	$0	$46,085
Sales Tax					$0	$0	$1,838	$0	$0	$1,838
INEEL Org Labor/Subcontractor Overheads					$2,180	$2,794	$20,562	$0	$0	$25,537
Escalation					$151	$193	$1,420	$0	$0	$1,763
Contingency					$514	$658	$4,846	$0	$0	$6,018
-- Total WBS 9102.2.11					**$6,936**	**$8,888**	**$65,415**	**$0**	**$0**	**$81,239**
Subtotal CB6709					$20,264	$28,762	$36,750	$0	$0	$85,777
Sales Tax					$0	$0	$1,838	$0	$0	$1,838
INEEL Org Labor/Subcontractor Overheads					$10,798	$15,327	$20,562	$0	$0	$46,687
Escalation					$746	$1,058	$1,420	$0	$0	$3,223
Contingency					$2,545	$3,612	$4,846	$0	$0	$11,002
- Total CB6709			480		$34,353	$48,759	$65,415	$0	$0	$148,527

Project Name:
ICDF Phase II
Project Location: ***INTEC***
Estimate Number: ***2448-D***

DIA CUSTOM GROUPING REPORT 2T

Client: ***D. K. Vernon***
Prepared By: ***J. C. Grenz***
Estimate Type: ***Project Support***

LEVEL	Org/Subcontractor	QTY	Hrs	Crew/Rate	Labor	Const Eqp	Matl	S/C	Other	TOTAL*
- CB6713										
-- **WBS 9102.1.35**										
LINE		U.C. per sf	0.004	CN-LABR	0.126	0	0.3	0	0	0.426
60 mill HDPE		364,400.00	1,458	$31.58	$46,031	$0	$109,320	$0	$0	$155,351
Subtotal WBS 9102.1.35					$46,031	$0	$109,320	$0	$0	$155,351
Sales Tax					$0	$0	$5,466	$0	$0	$5,466
INEEL Org Labor/Subcontractor Overheads					$31,698	$0	$79,044	$0	$0	$110,742
Escalation					$1,865	$0	$4,652	$0	$0	$6,517
Contingency					$6,368	$0	$15,879	$0	$0	$22,246
-- Total WBS 9102.1.35			**1,458**		**$85,962**	**$0**	**$214,361**	**$0**	**$0**	**$300,323**
Subtotal CB6713					$46,031	$0	$109,320	$0	$0	$155,351
Sales Tax					$0	$0	$5,466	$0	$0	$5,466
INEEL Org Labor/Subcontractor Overheads					$31,698	$0	$79,044	$0	$0	$110,742
Escalation					$1,865	$0	$4,652	$0	$0	$6,517
Contingency					$6,368	$0	$15,879	$0	$0	$22,246
- Total CB6713			1,458		$85,962	$0	$214,361	$0	$0	$300,323

Project Name:
ICDF Phase II
Project Location: ***INTEC***
Estimate Number: ***2448-D***

DIA CUSTOM GROUPING REPORT 2T

Client: ***D. K. Vernon***
Prepared By: ***J. C. Grenz***
Estimate Type: ***Project Support***

LEVEL	Org/Subcontractor	QTY	Hrs	Crew/Rate	Labor	Const Eqp	Matl	S/C	Other	TOTAL*
- CB6715										
-- **WBS 9102.1.40**										
	LINE	U.C. per sf	0.004	CN-LABR	0.126	0	0.16	0	0	0.286
16 oz Geotex		364,400.00	1,458	$31.58	$46,031	$0	$58,304	$0	$0	$104,335
Subtotal WBS 9102.1.40					$46,031	$0	$58,304	$0	$0	$104,335
Sales Tax					$0	$0	$2,915	$0	$0	$2,915
INEEL Org Labor/Subcontractor Overheads					$31,698	$0	$42,157	$0	$0	$73,855
Escalation					$1,865	$0	$2,481	$0	$0	$4,347
Contingency					$6,368	$0	$8,469	$0	$0	$14,836
-- Total WBS 9102.1.40			**1,458**		**$85,962**	**$0**	**$114,326**	**$0**	**$0**	**$200,288**
Subtotal CB6715					$46,031	$0	$58,304	$0	$0	$104,335
Sales Tax					$0	$0	$2,915	$0	$0	$2,915
INEEL Org Labor/Subcontractor Overheads					$31,698	$0	$42,157	$0	$0	$73,855
Escalation					$1,865	$0	$2,481	$0	$0	$4,347
Contingency					$6,368	$0	$8,469	$0	$0	$14,836
- Total CB6715			1,458		$85,962	$0	$114,326	$0	$0	$200,288

Project Name:
ICDF Phase II
Project Location: ***INTEC***
Estimate Number: ***2448-D***

DIA CUSTOM GROUPING REPORT 2T

Client: ***D. K. Vernon***
Prepared By: ***J. C. Grenz***
Estimate Type: ***Project Support***

LEVEL	Org/Subcontractor	QTY	Hrs	Crew/Rate	Labor	Const Eqp	Matl	S/C	Other	TOTAL*
- CB6725										
-- **WBS 9102.2.25**										
	LINE	U.C. per sf	0.015	CN-LABR	0.474	0	0.4	0	0	0.874
Geosynthetic Clay Liner		138,400.00	2,076	$31.58	$65,560	$0	$55,360	$0	$0	$120,920
00E1310	LINE	U.C. per hr	1	00E1310	34.75	68.68	0	0	0	103.43
Grove RT522 20 tn Crane		40.00	40	$34.75	$1,390	$2,747	$0	$0	$0	$4,137
Subtotal WBS 9102.2.25					$66,950	$2,747	$55,360	$0	$0	$125,057
Sales Tax					$0	$0	$2,768	$0	$0	$2,768
INEEL Org Labor/Subcontractor Overheads					$46,103	$1,892	$40,028	$0	$0	$88,023
Escalation					$2,713	$111	$2,356	$0	$0	$5,180
Contingency					$9,261	$380	$8,041	$0	$0	$17,682
-- Total WBS 9102.2.25			**2,076**		**$125,028**	**$5,130**	**$108,553**	**$0**	**$0**	**$238,711**
Subtotal CB6725					$66,950	$2,747	$55,360	$0	$0	$125,057
Sales Tax					$0	$0	$2,768	$0	$0	$2,768
INEEL Org Labor/Subcontractor Overheads					$46,103	$1,892	$40,028	$0	$0	$88,023
Escalation					$2,713	$111	$2,356	$0	$0	$5,180
Contingency					$9,261	$380	$8,041	$0	$0	$17,682
- Total CB6725			2,076		$125,028	$5,130	$108,553	$0	$0	$238,711

Project Name:
ICDF Phase II
Project Location: ***INTEC***
Estimate Number: ***2448-D***

DIA CUSTOM GROUPING REPORT 2T

Client: ***D. K. Vernon***
Prepared By: ***J. C. Grenz***
Estimate Type: ***Project Support***

LEVEL	Org/Subcontractor	QTY	Hrs	Crew/Rate	Labor	Const Eqp	Matl	S/C	Other	TOTAL*
- CB6750										
-- **WBS 9101.2.01**										
	DIRT	U.C. per hr	1	CN-EQMD	34.75	36.78	100	0	0	171.53
Seed Area		40.00	40	$34.75	$1,390	$1,471	$4,000	$0	$0	$6,861
	DIRT	U.C. per hr	1	CN-EQMD	34.75	36.78	20	0	0	91.53
Spread Straw		40.00	40	$34.75	$1,390	$1,471	$800	$0	$0	$3,661
Subtotal WBS 9101.2.01					$2,780	$2,942	$4,800	$0	$0	$10,522
Sales Tax					$0	$0	$240	$0	$0	$240
INEEL Org Labor/Subcontractor Overheads					$1,481	$1,568	$2,686	$0	$0	$5,735
Escalation					$102	$108	$185	$0	$0	$396
Contingency					$349	$369	$633	$0	$0	$1,351
-- Total WBS 9101.2.01			**80**		**$4,713**	**$4,988**	**$8,544**	**$0**	**$0**	**$18,245**
Subtotal CB6750					$2,780	$2,942	$4,800	$0	$0	$10,522
Sales Tax					$0	$0	$240	$0	$0	$240
INEEL Org Labor/Subcontractor Overheads					$1,481	$1,568	$2,686	$0	$0	$5,735
Escalation					$102	$108	$185	$0	$0	$396
Contingency					$349	$369	$633	$0	$0	$1,351
- Total CB6750			80		$4,713	$4,988	$8,544	$0	$0	$18,245

Project Name:
ICDF Phase II
Project Location: ***INTEC***
Estimate Number: ***2448-D***

DIA CUSTOM GROUPING REPORT 2T

Client: ***D. K. Vernon***
Prepared By: ***J. C. Grenz***
Estimate Type: ***Project Support***

LEVEL	Org/Subcontractor	QTY	Hrs	Crew/Rate	Labor	Const Eqp	Matl	S/C	Other	TOTAL*
- CB6751										
-- **WBS 9101.2.02**										
	DIRT	U.C. per hr	1	CN-EQMD	34.75	31.45	0	0	0	66.2
Dump Truck w/ Teamster		40.00	40	$34.75	$1,390	$1,258	$0	$0	$0	$2,648
CN-LABR	DIRT	U.C. per hr	4	CN-LABR	126.32	0	0	0	0	126.32
Laborer		80.00	320	$31.58	$10,106	$0	$0	$0	$0	$10,106
Subtotal	WBS 9101.2.02				$11,496	$1,258	$0	$0	$0	$12,754
Sales Tax					$0	$0	$0	$0	$0	$0
INEEL Org Labor/Subcontractor Overheads					$6,126	$670	$0	$0	$0	$6,796
Escalation					$423	$46	$0	$0	$0	$469
Contingency					$1,444	$158	$0	$0	$0	$1,602
-- Total WBS 9101.2.02			**360**		**$19,488**	**$2,133**	**$0**	**$0**	**$0**	**$21,620**
Subtotal	CB6751				$11,496	$1,258	$0	$0	$0	$12,754
Sales Tax					$0	$0	$0	$0	$0	$0
INEEL Org Labor/Subcontractor Overheads					$6,126	$670	$0	$0	$0	$6,796
Escalation					$423	$46	$0	$0	$0	$469
Contingency					$1,444	$158	$0	$0	$0	$1,602
- Total	CB6751		360		$19,488	$2,133	$0	$0	$0	$21,620

Project Name:
ICDF Phase II
Project Location: ***INTEC***
Estimate Number: ***2448-D***

DIA CUSTOM GROUPING REPORT 2T

Client: ***D. K. Vernon***
Prepared By: ***J. C. Grenz***
Estimate Type: ***Project Support***

LEVEL	Org/Subcontractor	QTY	Hrs	Crew/Rate	Labor	Const Eqp	Matl	S/C	Other	TOTAL*
- CB6755										
-- **WBS 9102.3.06**										
	DIRT	U.C. per hr	1	CN-EQMD	34.75	28.68	0	0	0	63.43
Foundation Excavation		10.00	10	$34.75	$348	$287	$0	$0	$0	$634
Subtotal WBS 9102.3.06					$348	$287	$0	$0	$0	$634
Sales Tax					$0	$0	$0	$0	$0	$0
INEEL Org Labor/Subcontractor Overheads					$185	$153	$0	$0	$0	$338
Escalation					$13	$11	$0	$0	$0	$23
Contingency					$44	$36	$0	$0	$0	$80
-- Total WBS 9102.3.06			**10**		**$589**	**$486**	**$0**	**$0**	**$0**	**$1,075**
-- **WBS 9103.3.03**										
	DIRT	U.C. per ea	40	CN-LABR	1263.2	0	5000	0	0	6263.2
Precast Manhole		1.00	40	$31.58	$1,263	$0	$5,000	$0	$0	$6,263
Subtotal WBS 9103.3.03					$1,263	$0	$5,000	$0	$0	$6,263
Sales Tax					$0	$0	$250	$0	$0	$250
INEEL Org Labor/Subcontractor Overheads					$673	$0	$2,798	$0	$0	$3,471
Escalation					$46	$0	$193	$0	$0	$240
Contingency					$238	$0	$989	$0	$0	$1,227
-- Total WBS 9103.3.03			**40**		**$2,221**	**$0**	**$9,230**	**$0**	**$0**	**$11,450**
Subtotal CB6755					$1,611	$287	$5,000	$0	$0	$6,898
Sales Tax					$0	$0	$250	$0	$0	$250
INEEL Org Labor/Subcontractor Overheads					$858	$153	$2,798	$0	$0	$3,809
Escalation					$59	$11	$193	$0	$0	$263
Contingency					$282	$36	$989	$0	$0	$1,306
- Total CB6755			50		$2,810	$486	$9,230	$0	$0	$12,526

Project Name:
ICDF Phase II
Project Location: ***INTEC***
Estimate Number: ***2448-D***

DIA CUSTOM GROUPING REPORT 2T

Client: ***D. K. Vernon***
Prepared By: ***J. C. Grenz***
Estimate Type: ***Project Support***

LEVEL	Org/Subcontractor	QTY	Hrs	Crew/Rate	Labor	Const Eqp	Matl	S/C	Other	TOTAL*
- CBA6704										
-- **WBS 9102.2.01**										
00E0610	DIRT	U.C. per hr	1	00E0610	0	75.65	0	0	0	75.65
Cat 815 Sheepsfoot		10.00	10		$0	$757	$0	$0	$0	$757
00E0620	DIRT	U.C. per hr	1	00E0620	0	11.82	0	0	0	11.82
Bowmag BW90 Compactor		10.00	10		$0	$118	$0	$0	$0	$118
00E0912	DIRT	U.C. per hr	1	00E0912	0	65.87	0	0	0	65.87
Cat 14 Grader		10.00	10		$0	$659	$0	$0	$0	$659
00E0940	DIRT	U.C. per hr	1	00E0940	0	43.83	0	0	0	43.83
Cat 950 4 cy Loader		10.00	10		$0	$438	$0	$0	$0	$438
00E0962	DIRT	U.C. per hr	1	00E0962	0	86.72	0	0	0	86.72
Cat D7 Dozer		10.00	10		$0	$867	$0	$0	$0	$867
CN-MGR	GEN	U.C. per ls		CN-MGR	0	0	0	0	10000	10000
Manager		1.00	0		$0	$0	$0	$0	$10,000	$10,000
CN-ENG	GEN	U.C. per ls		CN-ENG	0	0	0	0	10000	10000
Engineer		1.00	0		$0	$0	$0	$0	$10,000	$10,000
00E1010	DIRT	U.C. per hr	1	00E1010	0	53.64	0	0	0	53.64
Cat 320 1.25 cy Hoe		10.00	10		$0	$536	$0	$0	$0	$536
00E1310	DIRT	U.C. per hr	1	00E1310	0	68.68	0	0	0	68.68
Grove RT522 20 tn Crane		10.00	10		$0	$687	$0	$0	$0	$687
00E1910	DIRT	U.C. per hr	6	00E1910	0	295.02	0	0	0	295.02
30 tn Bottom Dump Trk.		10.00	60		$0	$2,950	$0	$0	$0	$2,950
00E2010	DIRT	U.C. per hr	4	00E2010	0	125.8	0	0	0	125.8
12 cy End Dump		10.00	40		$0	$1,258	$0	$0	$0	$1,258
00E2050	DIRT	U.C. per hr	1	00E2050	0	31.38	0	0	0	31.38
4000 gal Water Truck		10.00	10		$0	$314	$0	$0	$0	$314
00E2052	DIRT	U.C. per hr	1	00E2052	0	126.77	0	0	0	126.77
10000 gal Water Wagon		10.00	10		$0	$1,268	$0	$0	$0	$1,268
CN-EQMD	DIRT	U.C. per hr	5	CN-EQMD	173.75	0	0	0	0	173.75
Equipment Operators, Medium Equipment		40.00	200	$34.75	$6,950	$0	$0	$0	$0	$6,950

Project Name:
ICDF Phase II
Project Location: ***INTEC***
Estimate Number: ***2448-D***

DIA CUSTOM GROUPING REPORT 2T

Client: ***D. K. Vernon***
Prepared By: ***J. C. Grenz***
Estimate Type: ***Project Support***

LEVEL	Org/Subcontractor	QTY	Hrs	Crew/Rate	Labor	Const Eqp	Matl	S/C	Other	TOTAL*
CN-EQMM	DIRT	U.C. per hr	1	CN-EQMM	34.75	0	0	0	0	34.75
Equipment Operators, Master Mechanics		40.00	40	$34.75	$1,390	$0	$0	$0	$0	$1,390
Subtotal WBS 9102.2.01					$8,340	$9,852	$0	$0	$20,000	$38,192
Sales Tax					$0	$0	$0	$0	$0	$0
INEEL Org Labor/Subcontractor Overheads					$4,444	$5,250	$0	$0	$1,600	$11,294
Escalation					$307	$362	$0	$0	$518	$1,188
Contingency					$2,618	$3,093	$0	$0	$4,424	$10,135
-- Total WBS 9102.2.01			**240**		**$15,709**	**$18,557**	**$0**	**$0**	**$26,542**	**$60,808**
Subtotal CBA6704					$8,340	$9,852	$0	$0	$20,000	$38,192
Sales Tax					$0	$0	$0	$0	$0	$0
INEEL Org Labor/Subcontractor Overheads					$4,444	$5,250	$0	$0	$1,600	$11,294
Escalation					$307	$362	$0	$0	$518	$1,188
Contingency					$2,618	$3,093	$0	$0	$4,424	$10,135
- Total CBA6704			240		$15,709	$18,557	$0	$0	$26,542	$60,808

Project Name:
ICDF Phase II
Project Location: ***INTEC***
Estimate Number: ***2448-D***

DIA CUSTOM GROUPING REPORT 2T

Client: ***D. K. Vernon***
Prepared By: ***J. C. Grenz***
Estimate Type: ***Project Support***

LEVEL	Org/Subcontractor	QTY	Hrs	Crew/Rate	Labor	Const Eqp	Matl	S/C	Other	TOTAL*
- CBA6708										
-- **WBS 9102.1.30**										
	LINE	U.C. per sf	0.015	CN-LABR	0.474	0	0.4	0	0	0.874
Geosynthetic Clay Liner		364,400.00	5,466	$31.58	$172,616	$0	$145,760	$0	$0	$318,376
00E1310	LINE	U.C. per hr	1	00E1310	34.75	68.68	0	0	0	103.43
Grove RT522 20 tn Crane		120.00	120	$34.75	$4,170	$8,242	$0	$0	$0	$12,412
Subtotal WBS 9102.1.30					$176,786	$8,242	$145,760	$0	$0	$330,788
Sales Tax					$0	$0	$7,288	$0	$0	$7,288
INEEL Org Labor/Subcontractor Overheads					$121,739	$5,675	$105,392	$0	$0	$232,807
Escalation					$7,165	$334	$6,203	$0	$0	$13,701
Contingency					$24,455	$1,140	$21,171	$0	$0	$46,767
-- Total WBS 9102.1.30			**5,466**		**$330,145**	**$15,391**	**$285,814**	**$0**	**$0**	**$631,351**
Subtotal CBA6708					$176,786	$8,242	$145,760	$0	$0	$330,788
Sales Tax					$0	$0	$7,288	$0	$0	$7,288
INEEL Org Labor/Subcontractor Overheads					$121,739	$5,675	$105,392	$0	$0	$232,807
Escalation					$7,165	$334	$6,203	$0	$0	$13,701
Contingency					$24,455	$1,140	$21,171	$0	$0	$46,767
- Total CBA6708			5,466		$330,145	$15,391	$285,814	$0	$0	$631,351

Project Name:
ICDF Phase II
Project Location: ***INTEC***
Estimate Number: ***2448-D***

DIA CUSTOM GROUPING REPORT 2T

Client: ***D. K. Vernon***
Prepared By: ***J. C. Grenz***
Estimate Type: ***Project Support***

LEVEL	Org/Subcontractor	QTY	Hrs	Crew/Rate	Labor	Const Eqp	Matl	S/C	Other	TOTAL*
- CBA6709										
-- **WBS 9102.1.20**										
	LINE	U.C. per sf	0.004	CN-LABR	0.126	0	0.3	0	0	0.426
60 mill HDPE		364,400.00	1,458	$31.58	$46,031	$0	$109,320	$0	$0	$155,351
Subtotal WBS 9102.1.20					$46,031	$0	$109,320	$0	$0	$155,351
Sales Tax					$0	$0	$5,466	$0	$0	$5,466
INEEL Org Labor/Subcontractor Overheads					$31,698	$0	$79,044	$0	$0	$110,742
Escalation					$1,865	$0	$4,652	$0	$0	$6,517
Contingency					$6,368	$0	$15,879	$0	$0	$22,246
-- Total WBS 9102.1.20			**1,458**		**$85,962**	**$0**	**$214,361**	**$0**	**$0**	**$300,323**
Subtotal CBA6709					$46,031	$0	$109,320	$0	$0	$155,351
Sales Tax					$0	$0	$5,466	$0	$0	$5,466
INEEL Org Labor/Subcontractor Overheads					$31,698	$0	$79,044	$0	$0	$110,742
Escalation					$1,865	$0	$4,652	$0	$0	$6,517
Contingency					$6,368	$0	$15,879	$0	$0	$22,246
- Total CBA6709			1,458		$85,962	$0	$214,361	$0	$0	$300,323

Project Name:
ICDF Phase II
Project Location: ***INTEC***
Estimate Number: ***2448-D***

DIA CUSTOM GROUPING REPORT 2T

Client: ***D. K. Vernon***
Prepared By: ***J. C. Grenz***
Estimate Type: ***Project Support***

LEVEL	Org/Subcontractor	QTY	Hrs	Crew/Rate	Labor	Const Eqp	Matl	S/C	Other	TOTAL*
- CBA6710										
-- **WBS 9102.1.25**										
	LINE	U.C. per sf	0.004	CN-LABR	0.126	0	0.16	0	0	0.286
16 oz Geotex		364,400.00	1,458	$31.58	$46,031	$0	$58,304	$0	$0	$104,335
Subtotal WBS 9102.1.25					$46,031	$0	$58,304	$0	$0	$104,335
Sales Tax					$0	$0	$2,915	$0	$0	$2,915
INEEL Org Labor/Subcontractor Overheads					$31,698	$0	$42,157	$0	$0	$73,855
Escalation					$1,865	$0	$2,481	$0	$0	$4,347
Contingency					$6,368	$0	$8,469	$0	$0	$14,836
-- Total WBS 9102.1.25			**1,458**		**$85,962**	**$0**	**$114,326**	**$0**	**$0**	**$200,288**
Subtotal CBA6710					$46,031	$0	$58,304	$0	$0	$104,335
Sales Tax					$0	$0	$2,915	$0	$0	$2,915
INEEL Org Labor/Subcontractor Overheads					$31,698	$0	$42,157	$0	$0	$73,855
Escalation					$1,865	$0	$2,481	$0	$0	$4,347
Contingency					$6,368	$0	$8,469	$0	$0	$14,836
- Total CBA6710			1,458		$85,962	$0	$114,326	$0	$0	$200,288

Project Name:
ICDF Phase II
Project Location: ***INTEC***
Estimate Number: ***2448-D***

DIA CUSTOM GROUPING REPORT 2T

Client: ***D. K. Vernon***
Prepared By: ***J. C. Grenz***
Estimate Type: ***Project Support***

LEVEL	Org/Subcontractor	QTY	Hrs	Crew/Rate	Labor	Const Eqp	Matl	S/C	Other	TOTAL*
- CBA6712										
-- **WBS 9102.1.10**										
	DIRT	U.C. per hr	1	00E0912	0	65.87	0	0	0	65.87
Grader		120.00	120		$0	$7,904	$0	$0	$0	$7,904
00E0612	DIRT	U.C. per hr	1	00E0612	0	101.35	0	0	0	101.35
Cat 825 Sheepsfoot		120.00	120		$0	$12,162	$0	$0	$0	$12,162
00E2052	DIRT	U.C. per hr	1	00E2052	0	126.77	0	0	0	126.77
10000 gal Water Wagon		120.00	120		$0	$15,212	$0	$0	$0	$15,212
	DIRT	U.C. per hr	4	CN-EQMD	139	0	0	0	0	139
Operators & Grade Checker		120.00	480	$34.75	$16,680	$0	$0	$0	$0	$16,680
	DIRT	U.C. per hr	2	CN-LABR	63.16	0	0	0	0	63.16
Labor		120.00	240	$31.58	$7,579	$0	$0	$0	$0	$7,579
Subtotal WBS 9102.1.10					$24,259	$35,279	$0	$0	$0	$59,538
Sales Tax					$0	$0	$0	$0	$0	$0
INEEL Org Labor/Subcontractor Overheads					$12,927	$18,799	$0	$0	$0	$31,726
Escalation					$892	$1,298	$0	$0	$0	$2,190
Contingency					$3,046	$4,430	$0	$0	$0	$7,476
-- Total WBS 9102.1.10			**720**		**$41,125**	**$59,806**	**$0**	**$0**	**$0**	**$100,931**
-- **WBS 9102.1.15**										
	DIRT	U.C. per tn			244.26	308.45	82.05	0	0	634.76
Mix 7% Bentonite with Soil		156.00	0		$38,105	$48,118	$12,800	$0	$0	$99,023
Subtotal WBS 9102.1.15					$38,105	$48,118	$12,800	$0	$0	$99,023
Sales Tax					$0	$0	$640	$0	$0	$640
INEEL Org Labor/Subcontractor Overheads					$20,305	$25,641	$7,162	$0	$0	$53,108
Escalation					$1,402	$1,770	$494	$0	$0	$3,666
Contingency					$4,785	$6,042	$1,688	$0	$0	$12,515
-- Total WBS 9102.1.15					**$64,596**	**$81,572**	**$22,784**	**$0**	**$0**	**$168,952**
-- **WBS 9102.1.16**										
	DIRT	U.C. per cy			1.3	1.93	0	0	0	3.23
Load and Haul Clay		40,400.00	0		$52,520	$77,972	$0	$0	$0	$130,492

Project Name:
ICDF Phase II
Project Location: ***INTEC***
Estimate Number: ***2448-D***

DIA CUSTOM GROUPING REPORT 2T

Client: ***D. K. Vernon***
Prepared By: ***J. C. Grenz***
Estimate Type: ***Project Support***

LEVEL	Org/Subcontractor	QTY	Hrs	Crew/Rate	Labor	Const Eqp	Matl	S/C	Other	TOTAL*
	DIRT	U.C. per cy			0.97	1.57	0	0	0	2.54
Spread & Compact Clay		40,400.00	0		$39,188	$63,428	$0	$0	$0	$102,616
Subtotal WBS 9102.1.16					$91,708	$141,400	$0	$0	$0	$233,108
Sales Tax					$0	$0	$0	$0	$0	$0
INEEL Org Labor/Subcontractor Overheads					$48,869	$75,349	$0	$0	$0	$124,218
Escalation					$3,374	$5,202	$0	$0	$0	$8,576
Contingency					$11,516	$17,756	$0	$0	$0	$29,272
-- Total WBS 9102.1.16					**$155,467**	**$239,707**	**$0**	**$0**	**$0**	**$395,174**
Subtotal CBA6712					$154,072	$224,797	$12,800	$0	$0	$391,669
Sales Tax					$0	$0	$640	$0	$0	$640
INEEL Org Labor/Subcontractor Overheads					$82,101	$119,789	$7,162	$0	$0	$209,052
Escalation					$5,668	$8,270	$494	$0	$0	$14,433
Contingency					$19,347	$28,228	$1,688	$0	$0	$49,263
- Total CBA6712			720		$261,188	$381,085	$22,784	$0	$0	$665,057

Project Name:
ICDF Phase II
Project Location: ***INTEC***
Estimate Number: ***2448-D***

DIA CUSTOM GROUPING REPORT 2T

Client: ***D. K. Vernon***
Prepared By: ***J. C. Grenz***
Estimate Type: ***Project Support***

LEVEL	Org/Subcontractor	QTY	Hrs	Crew/Rate	Labor	Const Eqp	Matl	S/C	Other	TOTAL*
- CBA6714										
-- **WBS 9102.1.45**										
	DIRT	U.C. per cy			2.48	0.55	15	0	0	18.03
Spread Drain Rock		6,400.00	0		$15,872	$3,520	$96,000	$0	$0	$115,392
Subtotal WBS 9102.1.45					$15,872	$3,520	$96,000	$0	$0	$115,392
Sales Tax					$0	$0	$4,800	$0	$0	$4,800
INEEL Org Labor/Subcontractor Overheads					$8,458	$1,876	$53,714	$0	$0	$64,047
Escalation					$584	$129	$3,708	$0	$0	$4,422
Contingency					$1,993	$442	$12,658	$0	$0	$15,093
-- Total WBS 9102.1.45					**$26,907**	**$5,967**	**$170,880**	**$0**	**$0**	**$203,754**
Subtotal CBA6714					$15,872	$3,520	$96,000	$0	$0	$115,392
Sales Tax					$0	$0	$4,800	$0	$0	$4,800
INEEL Org Labor/Subcontractor Overheads					$8,458	$1,876	$53,714	$0	$0	$64,047
Escalation					$584	$129	$3,708	$0	$0	$4,422
Contingency					$1,993	$442	$12,658	$0	$0	$15,093
- Total CBA6714					$26,907	$5,967	$170,880	$0	$0	$203,754

Project Name:
ICDF Phase II
Project Location: ***INTEC***
Estimate Number: ***2448-D***

DIA CUSTOM GROUPING REPORT 2T

Client: ***D. K. Vernon***
Prepared By: ***J. C. Grenz***
Estimate Type: ***Project Support***

LEVEL	Org/Subcontractor	QTY	Hrs	Crew/Rate	Labor	Const Eqp	Matl	S/C	Other	TOTAL*
- CBA6716										
-- **WBS 9115.1.01**										
	PIPE	U.C. per lf	0.15	CN-PIPE	5.9	0	4.55	0	0	10.45
8" HDPE		1,200.00	180	$39.33	$7,079	$0	$5,460	$0	$0	$12,539
	PIPE	U.C. per lf	0.25	CN-PIPE	9.833	0	15.65	0	0	25.483
16 HDPE		800.00	200	$39.33	$7,866	$0	$12,520	$0	$0	$20,386
	PIPE	U.C. per ea	3	CN-PIPE	117.99	0	475	0	0	592.99
16" Tee		6.00	18	$39.33	$708	$0	$2,850	$0	$0	$3,558
	PIPE	U.C. per mo			0	5000	0	0	0	5000
HDPE Machine		2.00	0		$0	$10,000	$0	$0	$0	$10,000
Subtotal WBS 9115.1.01					$15,653	$10,000	$20,830	$0	$0	$46,483
Sales Tax					$0	$0	$1,042	$0	$0	$1,042
INEEL Org Labor/Subcontractor Overheads					$9,385	$5,995	$13,112	$0	$0	$28,492
Escalation					$601	$384	$840	$0	$0	$1,824
Contingency					$2,051	$1,310	$2,866	$0	$0	$6,227
-- Total WBS 9115.1.01			**398**		**$27,690**	**$17,689**	**$38,689**	**$0**	**$0**	**$84,069**
Subtotal CBA6716					$15,653	$10,000	$20,830	$0	$0	$46,483
Sales Tax					$0	$0	$1,042	$0	$0	$1,042
INEEL Org Labor/Subcontractor Overheads					$9,385	$5,995	$13,112	$0	$0	$28,492
Escalation					$601	$384	$840	$0	$0	$1,824
Contingency					$2,051	$1,310	$2,866	$0	$0	$6,227
- Total CBA6716			398		$27,690	$17,689	$38,689	$0	$0	$84,069

Project Name:
ICDF Phase II
Project Location: ***INTEC***
Estimate Number: ***2448-D***

DIA CUSTOM GROUPING REPORT 2T

Client: ***D. K. Vernon***
Prepared By: ***J. C. Grenz***
Estimate Type: ***Project Support***

LEVEL	Org/Subcontractor	QTY	Hrs	Crew/Rate	Labor	Const Eqp	Matl	S/C	Other	TOTAL*
- CBA6717										
-- **WBS 9102.1.50**										
	LINE	*U.C. per sf*	*0.004*	CN-LABR	0.126	0	0.16	0	0	0.286
16 oz Geotex		364,400.00	1,458	$31.58	$46,031	$0	$58,304	$0	$0	$104,335
Subtotal WBS 9102.1.50					$46,031	$0	$58,304	$0	$0	$104,335
Sales Tax					$0	$0	$2,915	$0	$0	$2,915
INEEL Org Labor/Subcontractor Overheads					$31,698	$0	$42,157	$0	$0	$73,855
Escalation					$1,865	$0	$2,481	$0	$0	$4,347
Contingency					$6,368	$0	$8,469	$0	$0	$14,836
-- Total WBS 9102.1.50			**1,458**		**$85,962**	**$0**	**$114,326**	**$0**	**$0**	**$200,288**
-- **WBS 9102.1.55**										
	DIRT	U.C. per cy			0.66	0.94	0	0	0	1.6
Load and Haul Material		38,500.00	0		$25,410	$36,190	$0	$0	$0	$61,600
	DIRT	U.C. per cy			1.01	1.2	0	0	0	2.21
Spread and Compact		38,500.00	0		$38,885	$46,200	$0	$0	$0	$85,085
Subtotal WBS 9102.1.55					$64,295	$82,390	$0	$0	$0	$146,685
Sales Tax					$0	$0	$0	$0	$0	$0
INEEL Org Labor/Subcontractor Overheads					$34,261	$43,904	$0	$0	$0	$78,165
Escalation					$2,365	$3,031	$0	$0	$0	$5,396
Contingency					$8,074	$10,346	$0	$0	$0	$18,420
-- Total WBS 9102.1.55					**$108,995**	**$139,671**	**$0**	**$0**	**$0**	**$248,666**
Subtotal CBA6717					$110,326	$82,390	$58,304	$0	$0	$251,020
Sales Tax					$0	$0	$2,915	$0	$0	$2,915
INEEL Org Labor/Subcontractor Overheads					$65,959	$43,904	$42,157	$0	$0	$152,020
Escalation					$4,231	$3,031	$2,481	$0	$0	$9,743
Contingency					$14,441	$10,346	$8,469	$0	$0	$33,256
- Total CBA6717			1,458		$194,957	$139,671	$114,326	$0	$0	$448,954

Project Name:
ICDF Phase II
Project Location: ***INTEC***
Estimate Number: ***2448-D***

DIA CUSTOM GROUPING REPORT 2T

Client: ***D. K. Vernon***
Prepared By: ***J. C. Grenz***
Estimate Type: ***Project Support***

LEVEL	Org/Subcontractor	QTY	Hrs	Crew/Rate	Labor	Const Eqp	Matl	S/C	Other	TOTAL*
- CBA6718										
-- **WBS 9102.1.03**										
	DIRT	U.C. per hr	1	CN-EQMD	34.75	28.68	0	0	0	63.43
Foundation Excavation		10.00	10	$34.75	$348	$287	$0	$0	$0	$634
Subtotal WBS 9102.1.03					$348	$287	$0	$0	$0	$634
Sales Tax					$0	$0	$0	$0	$0	$0
INEEL Org Labor/Subcontractor Overheads					$185	$153	$0	$0	$0	$338
Escalation					$13	$11	$0	$0	$0	$23
Contingency					$44	$36	$0	$0	$0	$80
-- Total WBS 9102.1.03			**10**		**$589**	**$486**	**$0**	**$0**	**$0**	**$1,075**
-- **WBS 9103.1.01**										
	CONC	U.C. per hr	2	CN-LABR	63.16	0	0	0	0	63.16
Fine Grade		10.00	20	$31.58	$632	$0	$0	$0	$0	$632
	CONC	U.C. per sf	0.25	CN-CARP	8.953	1.5	0	0	0	10.453
Form Foundation		205.00	51	$35.81	$1,835	$308	$0	$0	$0	$2,143
	CONC	U.C. per lb	0.03	CN-IRON	1.305	0	0.35	0	0	1.655
Place Rebar		2,300.00	69	$43.50	$3,002	$0	$805	$0	$0	$3,807
	CONC	U.C. per cy	3	CN-LABR	94.74	0	80	0	0	174.74
Place, Finish & Cure Conc		23.00	69	$31.58	$2,179	$0	$1,840	$0	$0	$4,019
Subtotal WBS 9103.1.01					$7,647	$308	$2,645	$0	$0	$10,600
Sales Tax					$0	$0	$132	$0	$0	$132
INEEL Org Labor/Subcontractor Overheads					$4,292	$173	$1,559	$0	$0	$6,024
Escalation					$287	$12	$104	$0	$0	$402
Contingency					$1,467	$59	$533	$0	$0	$2,059
-- Total WBS 9103.1.01			**209**		**$13,693**	**$551**	**$4,973**	**$0**	**$0**	**$19,217**
-- **WBS 9109.1.01**										
	CONC	U.C. per sf	0.025	CN-PORD	0.79	0	0.8	0	0	1.59
special coating		230.00	6	$31.59	$182	$0	$184	$0	$0	$366

Project Name:
ICDF Phase II
Project Location: ***INTEC***
Estimate Number: ***2448-D***

DIA CUSTOM GROUPING REPORT 2T

Client: ***D. K. Vernon***
Prepared By: ***J. C. Grenz***
Estimate Type: ***Project Support***

LEVEL	Org/Subcontractor	QTY	Hrs	Crew/Rate	Labor	Const Eqp	Matl	S/C	Other	TOTAL*
Subtotal WBS 9109.1.01					$182	$0	$184	$0	$0	$366
Sales Tax					$0	$0	$9	$0	$0	$9
INEEL Org Labor/Subcontractor Overheads					$102	$0	$108	$0	$0	$210
Escalation					$7	$0	$7	$0	$0	$14
Contingency					$44	$0	$46	$0	$0	$90
-- Total WBS 9109.1.01			**6**		**$334**	**$0**	**$355**	**$0**	**$0**	**$689**
-- WBS 9113.01										
	STEEL	U.C. per sf	0.4	CN-IRON	17.4	0	30	0	0	47.4
Metal Building		210.00	84	$43.50	$3,654	$0	$6,300	$0	$0	$9,954
Subtotal WBS 9113.01					$3,654	$0	$6,300	$0	$0	$9,954
Sales Tax					$0	$0	$315	$0	$0	$315
INEEL Org Labor/Subcontractor Overheads					$1,947	$0	$3,525	$0	$0	$5,472
Escalation					$134	$0	$243	$0	$0	$378
Contingency					$860	$0	$1,558	$0	$0	$2,418
-- Total WBS 9113.01			**84**		**$6,596**	**$0**	**$11,941**	**$0**	**$0**	**$18,537**
-- WBS 9115.1.02										
	PIPE	U.C. per ea	1	CN-PIPE	39.33	0	15.9	0	0	55.23
4" Pipe/Fittings		150.00	150	$39.33	$5,900	$0	$2,385	$0	$0	$8,285
	PIPE	U.C. per ea	3	CN-PIPE	117.99	0	700	0	0	817.99
4" Ball Valve		4.00	12	$39.33	$472	$0	$2,800	$0	$0	$3,272
	PIPE	U.C. per ea	5	CN-PIPE	196.65	0	1720	0	0	1916.65
4" Flow Meter		3.00	15	$39.33	$590	$0	$5,160	$0	$0	$5,750
	PIPE	U.C. per ea	2	CN-PIPE	78.66	0	500	0	0	578.66
Flow Totalizer		3.00	6	$39.33	$236	$0	$1,500	$0	$0	$1,736
	PIPE	U.C. per ea	8	CN-PIPE	314.64	0	2000	0	0	2314.64
4" Vac Relief Valve		6.00	48	$39.33	$1,888	$0	$12,000	$0	$0	$13,888
	PIPE	U.C. per ea	3	CN-PIPE	117.99	0	400	0	0	517.99
4" Butterfly Valve		1.00	3	$39.33	$118	$0	$400	$0	$0	$518
	PIPE	U.C. per ea	3	CN-PIPE	117.99	0	660	0	0	777.99
4" Check Valve		3.00	9	$39.33	$354	$0	$1,980	$0	$0	$2,334
	PIPE	U.C. per ea	2	CN-PIPE	78.66	0	40	0	0	118.66
1/2" Ball Valve		4.00	8	$39.33	$315	$0	$160	$0	$0	$475

Project Name:
ICDF Phase II
Project Location: ***INTEC***
Estimate Number: ***2448-D***

DIA CUSTOM GROUPING REPORT 2T

Client: ***D. K. Vernon***
Prepared By: ***J. C. Grenz***
Estimate Type: ***Project Support***

LEVEL	Org/Subcontractor	QTY	Hrs	Crew/Rate	Labor	Const Eqp	Matl	S/C	Other	TOTAL*
	PIPE	U.C. per ea	20	CN-PIPE	786.6	0	5000	0	0	5786.6
4" Subersable Pump		3.00	60	$39.33	$2,360	$0	$15,000	$0	$0	$17,360
Subtotal WBS 9115.1.02					$12,232	$0	$41,385	$0	$0	$53,617
Sales Tax					$0	$0	$2,069	$0	$0	$2,069
INEEL Org Labor/Subcontractor Overheads					$7,333	$0	$26,052	$0	$0	$33,385
Escalation					$470	$0	$1,668	$0	$0	$2,138
Contingency					$1,603	$0	$5,694	$0	$0	$7,297
-- Total WBS 9115.1.02			**311**		**$21,637**	**$0**	**$76,868**	**$0**	**$0**	**$98,505**
-- WBS 9116.1.01										
	ELEC	U.C. per Ea	12	CN-ELEC	430.68	0	4500	0	0	4930.68
Motor Control Center, MCC-Tx, 1 section		1.00	12	$35.89	$431	$0	$4,500	$0	$0	$4,931
	ELEC	U.C. per Ea	3	CN-ELEC	107.67	0	780	0	0	887.67
15 kVA Transformer, 480/108-120		1.00	3	$35.89	$108	$0	$780	$0	$0	$888
	ELEC	U.C. per Ea	3	CN-ELEC	107.67	0	750	0	0	857.67
100 amp Lighting panel		1.00	3	$35.89	$108	$0	$750	$0	$0	$858
	ELEC	U.C. per Ea	1	CN-ELEC	35.89	0	300	0	0	335.89
Secondary pump level controller		2.00	2	$35.89	$72	$0	$600	$0	$0	$672
	ELEC	U.C. per Ea	1	CN-ELEC	35.89	0	286	0	0	321.89
30 amp Nema 1 disconnect		3.00	3	$35.89	$108	$0	$858	$0	$0	$966
	ELEC	U.C. per Ea	4	CN-ELEC	143.56	0	2500	0	0	2643.56
Pump control panel		1.00	4	$35.89	$144	$0	$2,500	$0	$0	$2,644
Subtotal WBS 9116.1.01					$969	$0	$9,988	$0	$0	$10,957
Sales Tax					$0	$0	$499	$0	$0	$499
INEEL Org Labor/Subcontractor Overheads					$516	$0	$5,588	$0	$0	$6,105
Escalation					$36	$0	$386	$0	$0	$421
Contingency					$183	$0	$1,975	$0	$0	$2,158
-- Total WBS 9116.1.01			**27**		**$1,704**	**$0**	**$18,437**	**$0**	**$0**	**$20,141**
-- WBS 9116.1.02										
	ELEC	U.C. per Ea	0.75	CN-ELEC	26.918	0	125	0	0	151.918
100 watt HID Wall Pack		1.00	1	$35.89	$27	$0	$125	$0	$0	$152

Project Name:
ICDF Phase II
Project Location: ***INTEC***
Estimate Number: ***2448-D***

DIA CUSTOM GROUPING REPORT 2T

Client: ***D. K. Vernon***
Prepared By: ***J. C. Grenz***
Estimate Type: ***Project Support***

LEVEL	Org/Subcontractor	QTY	Hrs	Crew/Rate	Labor	Const Eqp	Matl	S/C	Other	TOTAL*
Assume interior light, 2 lamp 4' wrap around	ELEC	U.C. per Ea 2.00	0.75 2	CN-ELEC $35.89	26.918 $54	0 $0	75 $150	0 $0	0 $0	101.918 $204
Subtotal WBS 9116.1.02					$81	$0	$275	$0	$0	$356
Sales Tax					$0	$0	$14	$0	$0	$14
INEEL Org Labor/Subcontractor Overheads					$43	$0	$154	$0	$0	$197
Escalation					$3	$0	$11	$0	$0	$14
Contingency					$15	$0	$54	$0	$0	$70
-- Total WBS 9116.1.02			**2**		**$142**	**$0**	**$508**	**$0**	**$0**	**$650**
-- WBS 9116.1.04										
1" conduit with fittings and supports	ELEC	U.C. per Lf 70.00	0.008 1	CN-ELEC $35.89	0.287 $20	0 $0	1.25 $88	0 $0	0 $0	1.537 $108
3/4" conduit with fittings and supports	ELEC	U.C. per Lf 150.00	0.007 1	CN-ELEC $35.89	0.251 $38	0 $0	0.8 $120	0 $0	0 $0	1.051 $158
Control wiring	ELEC	U.C. per Ls 1.00	4 4	CN-ELEC $35.89	143.56 $144	0 $0	150 $150	0 $0	0 $0	293.56 $294
2/c #16 wire	ELEC	U.C. per Lf 100.00	0.01 1	CN-ELEC $35.89	0.359 $36	0 $0	0.2 $20	0 $0	0 $0	0.559 $56
2/c #16 shielded wire	ELEC	U.C. per Lf 150.00	0.01 2	CN-ELEC $35.89	0.359 $54	0 $0	0.25 $38	0 $0	0 $0	0.609 $91
#14 wire	ELEC	U.C. per Lf 250.00	0.007 2	CN-ELEC $35.89	0.251 $63	0 $0	0.05 $13	0 $0	0 $0	0.301 $75
#12 wire	ELEC	U.C. per Lf 750.00	0.008 6	CN-ELEC $35.89	0.287 $215	0 $0	0.06 $45	0 $0	0 $0	0.347 $260
Misc. Junction boxes	ELEC	U.C. per Ls 1.00	4 4	CN-ELEC $35.89	143.56 $144	0 $0	125 $125	0 $0	0 $0	268.56 $269
Conduit and wire labels	ELEC	U.C. per Ls 1.00	1 1	CN-ELEC $35.89	35.89 $36	0 $0	50 $50	0 $0	0 $0	85.89 $86
Subtotal WBS 9116.1.04					$749	$0	$648	$0	$0	$1,396
Sales Tax					$0	$0	$32	$0	$0	$32
INEEL Org Labor/Subcontractor Overheads					$399	$0	$362	$0	$0	$761
Escalation					$28	$0	$25	$0	$0	$53
Contingency					$141	$0	$128	$0	$0	$269
-- Total WBS 9116.1.04			**21**		**$1,316**	**$0**	**$1,195**	**$0**	**$0**	**$2,511**

INEEL
*Note: Total Excludes PF, G&A, and OPC
10/16/2001

Project Name:
ICDF Phase II
Project Location: ***INTEC***
Estimate Number: ***2448-D***

DIA CUSTOM GROUPING REPORT 2T

Client: ***D. K. Vernon***
Prepared By: ***J. C. Grenz***
Estimate Type: ***Project Support***

LEVEL	Org/Subcontractor	QTY	Hrs	Crew/Rate	Labor	Const Eqp	Matl	S/C	Other	TOTAL*
-- WBS 9116.1.05										
	ELEC	U.C. per Ls	8	CN-ELEC	287.12	0	0	0	0	287.12
Testing of systems and equipemnt		1.00	8	$35.89	$287	$0	$0	$0	$0	$287
Subtotal WBS 9116.1.05					$287	$0	$0	$0	$0	$287
Sales Tax					$0	$0	$0	$0	$0	$0
INEEL Org Labor/Subcontractor Overheads					$153	$0	$0	$0	$0	$153
Escalation					$11	$0	$0	$0	$0	$11
Contingency					$54	$0	$0	$0	$0	$54
-- Total WBS 9116.1.05			**8**		**$505**	**$0**	**$0**	**$0**	**$0**	**$505**
-- WBS 91160.1.03										
	ELEC	U.C. per Ea	1	CN-ELEC	35.89	0	575	0	0	610.89
1/2 HP Exhaust fan		1.00	1	$35.89	$36	$0	$575	$0	$0	$611
	ELEC	U.C. per Ea	1.5	CN-ELEC	53.835	0	229	0	0	282.835
3 kW Unit Heater		1.00	2	$35.89	$54	$0	$229	$0	$0	$283
Subtotal WBS 91160.1.03					$90	$0	$804	$0	$0	$894
Sales Tax					$0	$0	$40	$0	$0	$40
INEEL Org Labor/Subcontractor Overheads					$48	$0	$450	$0	$0	$498
Escalation					$3	$0	$31	$0	$0	$34
Contingency					$17	$0	$159	$0	$0	$176
-- Total WBS 91160.1.03			**3**		**$158**	**$0**	**$1,484**	**$0**	**$0**	**$1,642**
Subtotal CBA6718					$26,237	$594	$62,229	$0	$0	$89,060
Sales Tax					$0	$0	$3,111	$0	$0	$3,111
INEEL Org Labor/Subcontractor Overheads					$15,019	$325	$37,799	$0	$0	$53,143
Escalation					$990	$22	$2,475	$0	$0	$3,488
Contingency					$4,427	$95	$10,147	$0	$0	$14,670
- Total CBA6718			681		$46,673	$1,037	$115,761	$0	$0	$163,472

Project Name:
ICDF Phase II
Project Location: ***INTEC***
Estimate Number: ***2448-D***

DIA CUSTOM GROUPING REPORT 2T

Client: ***D. K. Vernon***
Prepared By: ***J. C. Grenz***
Estimate Type: ***Project Support***

LEVEL	Org/Subcontractor	QTY	Hrs	Crew/Rate	Labor	Const Eqp	Matl	S/C	Other	TOTAL*
- CBA6723										
-- **WBS 9102.2.15**										
LINE		U.C. per sf	0.004	CN-LABR	0.126	0	0.3	0	0	0.426
60 mill HDPE		138,400.00	554	$31.58	$17,483	$0	$41,520	$0	$0	$59,003
Subtotal WBS 9102.2.15					$17,483	$0	$41,520	$0	$0	$59,003
Sales Tax					$0	$0	$2,076	$0	$0	$2,076
INEEL Org Labor/Subcontractor Overheads					$12,039	$0	$30,021	$0	$0	$42,060
Escalation					$709	$0	$1,767	$0	$0	$2,475
Contingency					$2,418	$0	$6,031	$0	$0	$8,449
-- Total WBS 9102.2.15			**554**		**$32,649**	**$0**	**$81,415**	**$0**	**$0**	**$114,063**
Subtotal CBA6723					$17,483	$0	$41,520	$0	$0	$59,003
Sales Tax					$0	$0	$2,076	$0	$0	$2,076
INEEL Org Labor/Subcontractor Overheads					$12,039	$0	$30,021	$0	$0	$42,060
Escalation					$709	$0	$1,767	$0	$0	$2,475
Contingency					$2,418	$0	$6,031	$0	$0	$8,449
- Total CBA6723			554		$32,649	$0	$81,415	$0	$0	$114,063

Project Name:
ICDF Phase II
Project Location: ***INTEC***
Estimate Number: ***2448-D***

DIA CUSTOM GROUPING REPORT 2T

Client: ***D. K. Vernon***
Prepared By: ***J. C. Grenz***
Estimate Type: ***Project Support***

LEVEL	Org/Subcontractor	QTY	Hrs	Crew/Rate	Labor	Const Eqp	Matl	S/C	Other	TOTAL*
- CBA6724										
-- **WBS 9102.2.20**										
	LINE	U.C. per sf	0.004	CN-LABR	0.126	0	0.16	0	0	0.286
16 oz Geotex		138,400.00	554	$31.58	$17,483	$0	$22,144	$0	$0	$39,627
Subtotal WBS 9102.2.20					$17,483	$0	$22,144	$0	$0	$39,627
Sales Tax					$0	$0	$1,107	$0	$0	$1,107
INEEL Org Labor/Subcontractor Overheads					$12,039	$0	$16,011	$0	$0	$28,050
Escalation					$709	$0	$942	$0	$0	$1,651
Contingency					$2,418	$0	$3,216	$0	$0	$5,635
-- Total WBS 9102.2.20			**554**		**$32,649**	**$0**	**$43,421**	**$0**	**$0**	**$76,070**
-- **WBS 9102.2.30**										
	LINE	U.C. per sf	0.004	CN-LABR	0.126	0	0.16	0	0	0.286
16 oz Geotex		138,400.00	554	$31.58	$17,483	$0	$22,144	$0	$0	$39,627
Subtotal WBS 9102.2.30					$17,483	$0	$22,144	$0	$0	$39,627
Sales Tax					$0	$0	$1,107	$0	$0	$1,107
INEEL Org Labor/Subcontractor Overheads					$12,039	$0	$16,011	$0	$0	$28,050
Escalation					$709	$0	$942	$0	$0	$1,651
Contingency					$2,418	$0	$3,216	$0	$0	$5,635
-- Total WBS 9102.2.30			**554**		**$32,649**	**$0**	**$43,421**	**$0**	**$0**	**$76,070**
Subtotal CBA6724					$34,965	$0	$44,288	$0	$0	$79,253
Sales Tax					$0	$0	$2,214	$0	$0	$2,214
INEEL Org Labor/Subcontractor Overheads					$24,078	$0	$32,023	$0	$0	$56,101
Escalation					$1,417	$0	$1,885	$0	$0	$3,302
Contingency					$4,837	$0	$6,433	$0	$0	$11,270
- Total CBA6724			1,107		$65,297	$0	$86,842	$0	$0	$152,140

Project Name:
ICDF Phase II
Project Location: ***INTEC***
Estimate Number: ***2448-D***

DIA CUSTOM GROUPING REPORT 2T

Client: ***D. K. Vernon***
Prepared By: ***J. C. Grenz***
Estimate Type: ***Project Support***

LEVEL	Org/Subcontractor	QTY	Hrs	Crew/Rate	Labor	Const Eqp	Matl	S/C	Other	TOTAL*
- CBA6725										
-- **WBS 9102.2.01**										
	DIRT	U.C. per hr	1	CN-EQMD	34.75	28.68	0	0	0	63.43
Foundation Excavation		10.00	10	$34.75	$348	$287	$0	$0	$0	$634
Subtotal WBS 9102.2.01					$348	$287	$0	$0	$0	$634
Sales Tax					$0	$0	$0	$0	$0	$0
INEEL Org Labor/Subcontractor Overheads					$185	$153	$0	$0	$0	$338
Escalation					$13	$11	$0	$0	$0	$23
Contingency					$44	$36	$0	$0	$0	$80
-- Total WBS 9102.2.01			**10**		**$589**	**$486**	**$0**	**$0**	**$0**	**$1,075**
-- **WBS 9103.2.01**										
	CONC	U.C. per hr	2	CN-LABR	63.16	0	0	0	0	63.16
Fine Grade		10.00	20	$31.58	$632	$0	$0	$0	$0	$632
	CONC	U.C. per sf	0.25	CN-CARP	8.953	1.5	0	0	0	10.453
Form Foundation		205.00	51	$35.81	$1,835	$308	$0	$0	$0	$2,143
	CONC	U.C. per lb	0.03	CN-IRON	1.305	0	0.35	0	0	1.655
Place Rebar		2,300.00	69	$43.50	$3,002	$0	$805	$0	$0	$3,807
	CONC	U.C. per cy	3	CN-LABR	94.74	0	80	0	0	174.74
Place, Finish & Cure Conc		23.00	69	$31.58	$2,179	$0	$1,840	$0	$0	$4,019
Subtotal WBS 9103.2.01					$7,647	$308	$2,645	$0	$0	$10,600
Sales Tax					$0	$0	$132	$0	$0	$132
INEEL Org Labor/Subcontractor Overheads					$4,292	$173	$1,559	$0	$0	$6,024
Escalation					$287	$12	$104	$0	$0	$402
Contingency					$1,467	$59	$533	$0	$0	$2,059
-- Total WBS 9103.2.01			**209**		**$13,693**	**$551**	**$4,973**	**$0**	**$0**	**$19,217**
-- **WBS 9109.2.01**										
	CONC	U.C. per sf	0.025	CN-PORD	0.79	0	0.8	0	0	1.59
special coating		230.00	6	$31.59	$182	$0	$184	$0	$0	$366

Project Name:
ICDF Phase II
Project Location: ***INTEC***
Estimate Number: ***2448-D***

DIA CUSTOM GROUPING REPORT 2T

Client: ***D. K. Vernon***
Prepared By: ***J. C. Grenz***
Estimate Type: ***Project Support***

LEVEL	Org/Subcontractor	QTY	Hrs	Crew/Rate	Labor	Const Eqp	Matl	S/C	Other	TOTAL*
Subtotal WBS 9109.2.01					$182	$0	$184	$0	$0	$366
Sales Tax					$0	$0	$9	$0	$0	$9
INEEL Org Labor/Subcontractor Overheads					$102	$0	$108	$0	$0	$210
Escalation					$7	$0	$7	$0	$0	$14
Contingency					$44	$0	$46	$0	$0	$90
-- Total WBS 9109.2.01			**6**		**$334**	**$0**	**$355**	**$0**	**$0**	**$689**
-- WBS 9113.2.01										
	STEEL	U.C. per sf	0.4	CN-IRON	17.4	0	30	0	0	47.4
Metal Building		210.00	84	$43.50	$3,654	$0	$6,300	$0	$0	$9,954
Subtotal WBS 9113.2.01					$3,654	$0	$6,300	$0	$0	$9,954
Sales Tax					$0	$0	$315	$0	$0	$315
INEEL Org Labor/Subcontractor Overheads					$1,947	$0	$3,525	$0	$0	$5,472
Escalation					$134	$0	$243	$0	$0	$378
Contingency					$860	$0	$1,558	$0	$0	$2,418
-- Total WBS 9113.2.01			**84**		**$6,596**	**$0**	**$11,941**	**$0**	**$0**	**$18,537**
-- WBS 9115.2.01										
	PIPE	U.C. per ea	1	CN-PIPE	39.33	0	15.9	0	0	55.23
4" Pipe/Fittings		100.00	100	$39.33	$3,933	$0	$1,590	$0	$0	$5,523
	PIPE	U.C. per ea	3	CN-PIPE	117.99	0	700	0	0	817.99
4" Ball Valve		2.00	6	$39.33	$236	$0	$1,400	$0	$0	$1,636
	PIPE	U.C. per ea	3	CN-PIPE	117.99	0	400	0	0	517.99
4" Butterfly Valve		3.00	9	$39.33	$354	$0	$1,200	$0	$0	$1,554
	PIPE	U.C. per ea	3	CN-PIPE	117.99	0	275	0	0	392.99
2" Butterfly Valve		2.00	6	$39.33	$236	$0	$550	$0	$0	$786
Subtotal WBS 9115.2.01					$4,759	$0	$4,740	$0	$0	$9,499
Sales Tax					$0	$0	$237	$0	$0	$237
INEEL Org Labor/Subcontractor Overheads					$2,853	$0	$2,984	$0	$0	$5,837
Escalation					$183	$0	$191	$0	$0	$374
Contingency					$624	$0	$652	$0	$0	$1,276
-- Total WBS 9115.2.01			**121**		**$8,418**	**$0**	**$8,804**	**$0**	**$0**	**$17,222**
-- WBS 9116.2.01										
	ELEC	U.C. per Ea	12	CN-ELEC	430.68	0	4500	0	0	4930.68
Motor Control Center, MCC-Tx, 1 section		1.00	12	$35.89	$431	$0	$4,500	$0	$0	$4,931

Project Name:
ICDF Phase II
Project Location: ***INTEC***
Estimate Number: ***2448-D***

DIA CUSTOM GROUPING REPORT 2T

Client: ***D. K. Vernon***
Prepared By: ***J. C. Grenz***
Estimate Type: ***Project Support***

LEVEL	Org/Subcontractor	QTY	Hrs	Crew/Rate	Labor	Const Eqp	Matl	S/C	Other	TOTAL*
	ELEC	U.C. per Ea	3	CN-ELEC	107.67	0	780	0	0	887.67
15 kVA Transformer, 480/108-120		1.00	3	$35.89	$108	$0	$780	$0	$0	$888
	ELEC	U.C. per Ea	3	CN-ELEC	107.67	0	750	0	0	857.67
100 amp Lighting panel		1.00	3	$35.89	$108	$0	$750	$0	$0	$858
	ELEC	U.C. per Ea	1	CN-ELEC	35.89	0	300	0	0	335.89
Secondary pump level controller		2.00	2	$35.89	$72	$0	$600	$0	$0	$672
	ELEC	U.C. per Ea	1	CN-ELEC	35.89	0	286	0	0	321.89
30 amp Nema 1 disconnect		3.00	3	$35.89	$108	$0	$858	$0	$0	$966
	ELEC	U.C. per Ea	4	CN-ELEC	143.56	0	2500	0	0	2643.56
Pump control panel		1.00	4	$35.89	$144	$0	$2,500	$0	$0	$2,644
Subtotal WBS 9116.2.01					$969	$0	$9,988	$0	$0	$10,957
Sales Tax					$0	$0	$499	$0	$0	$499
INEEL Org Labor/Subcontractor Overheads					$516	$0	$5,588	$0	$0	$6,105
Escalation					$36	$0	$386	$0	$0	$421
Contingency					$183	$0	$1,975	$0	$0	$2,158
-- Total WBS 9116.2.01			**27**		**$1,704**	**$0**	**$18,437**	**$0**	**$0**	**$20,141**
-- WBS 9116.2.02										
	ELEC	U.C. per Ea	0.75	CN-ELEC	26.918	0	125	0	0	151.918
100 watt HID Wall Pack		1.00	1	$35.89	$27	$0	$125	$0	$0	$152
	ELEC	U.C. per Ea	0.75	CN-ELEC	26.918	0	75	0	0	101.918
Assume interior light, 2 lamp 4' wrap around		2.00	2	$35.89	$54	$0	$150	$0	$0	$204
Subtotal WBS 9116.2.02					$81	$0	$275	$0	$0	$356
Sales Tax					$0	$0	$14	$0	$0	$14
INEEL Org Labor/Subcontractor Overheads					$43	$0	$154	$0	$0	$197
Escalation					$3	$0	$11	$0	$0	$14
Contingency					$15	$0	$54	$0	$0	$70
-- Total WBS 9116.2.02			**2**		**$142**	**$0**	**$508**	**$0**	**$0**	**$650**
-- WBS 9116.2.04										
	ELEC	U.C. per Lf	0.008	CN-ELEC	0.287	0	1.25	0	0	1.537
1" conduit with fittings and supports		70.00	1	$35.89	$20	$0	$88	$0	$0	$108
	ELEC	U.C. per Lf	0.007	CN-ELEC	0.251	0	0.8	0	0	1.051
3/4" conduit with fittings and supports		150.00	1	$35.89	$38	$0	$120	$0	$0	$158
	ELEC	U.C. per Ls	4	CN-ELEC	143.56	0	150	0	0	293.56
Control wiring		1.00	4	$35.89	$144	$0	$150	$0	$0	$294

Project Name:
ICDF Phase II
Project Location: ***INTEC***
Estimate Number: ***2448-D***

DIA CUSTOM GROUPING REPORT 2T

Client: ***D. K. Vernon***
Prepared By: ***J. C. Grenz***
Estimate Type: ***Project Support***

LEVEL	Org/Subcontractor	QTY	Hrs	Crew/Rate	Labor	Const Eqp	Matl	S/C	Other	TOTAL*
	ELEC	U.C. per Lf	0.01	CN-ELEC	0.359	0	0.2	0	0	0.559
2/c #16 wire		100.00	1	$35.89	$36	$0	$20	$0	$0	$56
	ELEC	U.C. per Lf	0.01	CN-ELEC	0.359	0	0.25	0	0	0.609
2/c #16 shielded wire		150.00	2	$35.89	$54	$0	$38	$0	$0	$91
	ELEC	U.C. per Lf	0.007	CN-ELEC	0.251	0	0.05	0	0	0.301
#14 wire		250.00	2	$35.89	$63	$0	$13	$0	$0	$75
	ELEC	U.C. per Lf	0.008	CN-ELEC	0.287	0	0.06	0	0	0.347
#12 wire		750.00	6	$35.89	$215	$0	$45	$0	$0	$260
	ELEC	U.C. per Ls	4	CN-ELEC	143.56	0	125	0	0	268.56
Misc. Junction boxes		1.00	4	$35.89	$144	$0	$125	$0	$0	$269
	ELEC	U.C. per Ls	1	CN-ELEC	35.89	0	50	0	0	85.89
Conduit and wire labels		1.00	1	$35.89	$36	$0	$50	$0	$0	$86
Subtotal WBS 9116.2.04					$749	$0	$648	$0	$0	$1,396
Sales Tax					$0	$0	$32	$0	$0	$32
INEEL Org Labor/Subcontractor Overheads					$399	$0	$362	$0	$0	$761
Escalation					$28	$0	$25	$0	$0	$53
Contingency					$141	$0	$128	$0	$0	$269
-- Total WBS 9116.2.04			**21**		**$1,316**	**$0**	**$1,195**	**$0**	**$0**	**$2,511**
-- WBS 9116.2.05										
	ELEC	U.C. per Ls	8	CN-ELEC	287.12	0	0	0	0	287.12
Testing of systems and equipemnt		1.00	8	$35.89	$287	$0	$0	$0	$0	$287
Subtotal WBS 9116.2.05					$287	$0	$0	$0	$0	$287
Sales Tax					$0	$0	$0	$0	$0	$0
INEEL Org Labor/Subcontractor Overheads					$153	$0	$0	$0	$0	$153
Escalation					$11	$0	$0	$0	$0	$11
Contingency					$54	$0	$0	$0	$0	$54
-- Total WBS 9116.2.05			**8**		**$505**	**$0**	**$0**	**$0**	**$0**	**$505**
-- WBS 91160.2.03										
	ELEC	U.C. per Ea	1	CN-ELEC	35.89	0	575	0	0	610.89
1/2 HP Exhaust fan		1.00	1	$35.89	$36	$0	$575	$0	$0	$611

Project Name:
ICDF Phase II
Project Location: ***INTEC***
Estimate Number: ***2448-D***

DIA CUSTOM GROUPING REPORT 2T

Client: ***D. K. Vernon***
Prepared By: ***J. C. Grenz***
Estimate Type: ***Project Support***

LEVEL	Org/Subcontractor	QTY	Hrs	Crew/Rate	Labor	Const Eqp	Matl	S/C	Other	TOTAL*
	ELEC	U.C. per Ea	1.5	CN-ELEC	53.835	0	229	0	0	282.835
3 kW Unit Heater		1.00	2	$35.89	$54	$0	$229	$0	$0	$283
Subtotal WBS 91160.2.03					$90	$0	$804	$0	$0	$894
Sales Tax					$0	$0	$40	$0	$0	$40
INEEL Org Labor/Subcontractor Overheads					$48	$0	$450	$0	$0	$498
Escalation					$3	$0	$31	$0	$0	$34
Contingency					$17	$0	$159	$0	$0	$176
-- Total WBS 91160.2.03			**3**		**$158**	**$0**	**$1,484**	**$0**	**$0**	**$1,642**
Subtotal CBA6725					$18,765	$594	$25,584	$0	$0	$44,943
Sales Tax					$0	$0	$1,279	$0	$0	$1,279
INEEL Org Labor/Subcontractor Overheads					$10,539	$325	$14,731	$0	$0	$25,595
Escalation					$703	$22	$998	$0	$0	$1,724
Contingency					$3,448	$95	$5,106	$0	$0	$8,649
- Total CBA6725			491		$33,455	$1,037	$47,697	$0	$0	$82,189

Project Name:
ICDF Phase II
Project Location: ***INTEC***
Estimate Number: ***2448-D***

DIA CUSTOM GROUPING REPORT 2T

Client: ***D. K. Vernon***
Prepared By: ***J. C. Grenz***
Estimate Type: ***Project Support***

LEVEL	Org/Subcontractor	QTY	Hrs	Crew/Rate	Labor	Const Eqp	Matl	S/C	Other	TOTAL*
- CBA6726										
-- **WBS 9102.2.35**										
LINE		U.C. per sf	0.004	CN-LABR	0.126	0	0.3	0	0	0.426
60 mill HDPE		138,400.00	554	$31.58	$17,483	$0	$41,520	$0	$0	$59,003
Subtotal WBS 9102.2.35					$17,483	$0	$41,520	$0	$0	$59,003
Sales Tax					$0	$0	$2,076	$0	$0	$2,076
INEEL Org Labor/Subcontractor Overheads					$12,039	$0	$30,021	$0	$0	$42,060
Escalation					$709	$0	$1,767	$0	$0	$2,475
Contingency					$2,418	$0	$6,031	$0	$0	$8,449
-- Total WBS 9102.2.35			**554**		**$32,649**	**$0**	**$81,415**	**$0**	**$0**	**$114,063**
-- **WBS 9102.2.40**										
LINE		U.C. per sf	0.004	CN-LABR	0.126	0	0.3	0	0	0.426
60 mill HDPE		138,400.00	554	$31.58	$17,483	$0	$41,520	$0	$0	$59,003
Subtotal WBS 9102.2.40					$17,483	$0	$41,520	$0	$0	$59,003
Sales Tax					$0	$0	$2,076	$0	$0	$2,076
INEEL Org Labor/Subcontractor Overheads					$12,039	$0	$30,021	$0	$0	$42,060
Escalation					$709	$0	$1,767	$0	$0	$2,475
Contingency					$2,418	$0	$6,031	$0	$0	$8,449
-- Total WBS 9102.2.40			**554**		**$32,649**	**$0**	**$81,415**	**$0**	**$0**	**$114,063**
Subtotal CBA6726					$34,965	$0	$83,040	$0	$0	$118,005
Sales Tax					$0	$0	$4,152	$0	$0	$4,152
INEEL Org Labor/Subcontractor Overheads					$24,078	$0	$60,042	$0	$0	$84,120
Escalation					$1,417	$0	$3,534	$0	$0	$4,951
Contingency					$4,837	$0	$12,061	$0	$0	$16,898
- Total CBA6726			1,107		$65,297	$0	$162,830	$0	$0	$228,127

Project Name:
ICDF Phase II
Project Location: ***INTEC***
Estimate Number: ***2448-D***

DIA CUSTOM GROUPING REPORT 2T

Client: ***D. K. Vernon***
Prepared By: ***J. C. Grenz***
Estimate Type: ***Project Support***

LEVEL	Org/Subcontractor	QTY	Hrs	Crew/Rate	Labor	Const Eqp	Matl	S/C	Other	TOTAL*
- CBA6729										
-- **WBS 9102.3.01**										
	DIRT	U.C. per hr	1	CN-EQMD	34.75	28.68	0	0	0	63.43
Foundation Excavation		15.00	15	$34.75	$521	$430	$0	$0	$0	$951
Subtotal WBS 9102.3.01					$521	$430	$0	$0	$0	$951
Sales Tax					$0	$0	$0	$0	$0	$0
INEEL Org Labor/Subcontractor Overheads					$278	$229	$0	$0	$0	$507
Escalation					$19	$16	$0	$0	$0	$35
Contingency					$65	$54	$0	$0	$0	$119
-- Total WBS 9102.3.01			**15**		**$884**	**$729**	**$0**	**$0**	**$0**	**$1,613**
-- **WBS 9103.3.01**										
	CONC	U.C. per hr	2	CN-LABR	63.16	0	0	0	0	63.16
Fine Grade		15.00	30	$31.58	$947	$0	$0	$0	$0	$947
	CONC	U.C. per sf	0.25	CN-CARP	8.953	1.5	0	0	0	10.453
Form Foundation		325.00	81	$35.81	$2,910	$488	$0	$0	$0	$3,397
	CONC	U.C. per lb	0.15	CN-CARP	5.372	0	3	0	0	8.372
Misc Emb Metal		60.00	9	$35.81	$322	$0	$180	$0	$0	$502
	CONC	U.C. per lb	0.03	CN-IRON	1.305	0	0.35	0	0	1.655
Place Rebar		3,600.00	108	$43.50	$4,698	$0	$1,260	$0	$0	$5,958
	CONC	U.C. per cy	3	CN-LABR	94.74	0	80	0	0	174.74
Place, Finish & Cure Conc		36.00	108	$31.58	$3,411	$0	$2,880	$0	$0	$6,291
	CONC	U.C. per ea			0	0	0	0	400	400
Bollards		4.00	0		$0	$0	$0	$0	$1,600	$1,600
Subtotal WBS 9103.3.01					$12,288	$488	$4,320	$0	$1,600	$18,695
Sales Tax					$0	$0	$216	$0	$0	$216
INEEL Org Labor/Subcontractor Overheads					$6,897	$274	$2,546	$0	$160	$9,876
Escalation					$460	$18	$170	$0	$42	$691
Contingency					$2,357	$94	$870	$0	$216	$3,537
-- Total WBS 9103.3.01			**336**		**$22,002**	**$873**	**$8,122**	**$0**	**$2,019**	**$33,016**
-- **WBS 9105.3.01**										
	STEEL	U.C. per sf	1	CN-IRON	43.5	0	25	0	0	68.5
Trench Grating		8.00	8	$43.50	$348	$0	$200	$0	$0	$548

Project Name:
ICDF Phase II
Project Location: ***INTEC***
Estimate Number: ***2448-D***

DIA CUSTOM GROUPING REPORT 2T

Client: ***D. K. Vernon***
Prepared By: ***J. C. Grenz***
Estimate Type: ***Project Support***

LEVEL	Org/Subcontractor	QTY	Hrs	Crew/Rate	Labor	Const Eqp	Matl	S/C	Other	TOTAL*
	STEEL	U.C. per lb	0.02	CN-IRON	0.87	0	2.5	0	0	3.37
Misc Steel Platform		1,800.00	36	$43.50	$1,566	$0	$4,500	$0	$0	$6,066
Subtotal WBS 9105.3.01					$1,914	$0	$4,700	$0	$0	$6,614
Sales Tax					$0	$0	$235	$0	$0	$235
INEEL Org Labor/Subcontractor Overheads					$1,020	$0	$2,630	$0	$0	$3,650
Escalation					$70	$0	$182	$0	$0	$252
Contingency					$451	$0	$1,162	$0	$0	$1,613
-- Total WBS 9105.3.01			**44**		**$3,455**	**$0**	**$8,908**	**$0**	**$0**	**$12,363**
-- WBS 9109.3.01										
	CONC	U.C. per sf	0.025	CN-PORD	0.79	0	0.8	0	0	1.59
special coating		960.00	24	$31.59	$758	$0	$768	$0	$0	$1,526
Subtotal WBS 9109.3.01					$758	$0	$768	$0	$0	$1,526
Sales Tax					$0	$0	$38	$0	$0	$38
INEEL Org Labor/Subcontractor Overheads					$426	$0	$453	$0	$0	$878
Escalation					$28	$0	$30	$0	$0	$59
Contingency					$182	$0	$193	$0	$0	$375
-- Total WBS 9109.3.01			**24**		**$1,394**	**$0**	**$1,483**	**$0**	**$0**	**$2,877**
-- WBS 9115.3.02										
	PIPE	U.C. per ea	8	CN-PIPE	314.64	0	28	0	0	342.64
8" Flange Adapter		1.00	8	$39.33	$315	$0	$28	$0	$0	$343
	PIPE	U.C. per ea	1	CN-PIPE	39.33	0	15	0	0	54.33
8" Flange Ring		1.00	1	$39.33	$39	$0	$15	$0	$0	$54
	PIPE	U.C. per ea	0.5	CN-PIPE	19.665	0	10	0	0	29.665
4" Flange Adapter		1.00	1	$39.33	$20	$0	$10	$0	$0	$30
	PIPE	U.C. per ea	1	CN-PIPE	39.33	0	15	0	0	54.33
4" Flange Ring		1.00	1	$39.33	$39	$0	$15	$0	$0	$54

Project Name:
ICDF Phase II
Project Location: ***INTEC***
Estimate Number: ***2448-D***

DIA CUSTOM GROUPING REPORT 2T

Client: ***D. K. Vernon***
Prepared By: ***J. C. Grenz***
Estimate Type: ***Project Support***

LEVEL	Org/Subcontractor	QTY	Hrs	Crew/Rate	Labor	Const Eqp	Matl	S/C	Other	TOTAL*
	PIPE	U.C. per ea	40	CN-PIPE	1573.2	0	5000	0	0	6573.2
6" Standpipe		1.00	40	$39.33	$1,573	$0	$5,000	$0	$0	$6,573
Subtotal WBS 9115.3.02					$1,986	$0	$5,068	$0	$0	$7,054
Sales Tax					$0	$0	$253	$0	$0	$253
INEEL Org Labor/Subcontractor Overheads					$1,191	$0	$3,190	$0	$0	$4,381
Escalation					$76	$0	$204	$0	$0	$281
Contingency					$260	$0	$697	$0	$0	$958
-- Total WBS 9115.3.02			**51**		**$3,513**	**$0**	**$9,413**	**$0**	**$0**	**$12,927**
Subtotal CBA6729					$17,467	$918	$14,856	$0	$1,600	$34,841
Sales Tax					$0	$0	$743	$0	$0	$743
INEEL Org Labor/Subcontractor Overheads					$9,811	$503	$8,819	$0	$160	$19,292
Escalation					$655	$34	$586	$0	$42	$1,317
Contingency					$3,316	$148	$2,923	$0	$216	$6,602
- Total CBA6729			470		$31,248	$1,602	$27,926	$0	$2,019	$62,795

Project Name:
ICDF Phase II
Project Location: ***INTEC***
Estimate Number: ***2448-D***

DIA CUSTOM GROUPING REPORT 2T

Client: ***D. K. Vernon***
Prepared By: ***J. C. Grenz***
Estimate Type: ***Project Support***

LEVEL	Org/Subcontractor	QTY	Hrs	Crew/Rate	Labor	Const Eqp	Matl	S/C	Other	TOTAL*
- CBA6731										
-- **WBS 9102.3.02**										
	DIRT	U.C. per cy			1.47	0.94	0	0	0	2.41
Trench Excavation		870.00	0		$1,279	$818	$0	$0	$0	$2,097
	DIRT	U.C. per cy			3.76	1.14	0	0	0	4.9
Trench Backfill		870.00	0		$3,271	$992	$0	$0	$0	$4,263
Subtotal WBS 9102.3.02					$4,550	$1,810	$0	$0	$0	$6,360
Sales Tax					$0	$0	$0	$0	$0	$0
INEEL Org Labor/Subcontractor Overheads					$2,425	$964	$0	$0	$0	$3,389
Escalation					$167	$67	$0	$0	$0	$234
Contingency					$571	$227	$0	$0	$0	$799
-- Total WBS 9102.3.02					**$7,714**	**$3,068**	**$0**	**$0**	**$0**	**$10,781**
-- **WBS 9103.3.02**										
	CONC	U.C. per sf	0.2	CN-CARP	7.162	1.5	0	0	0	8.662
Form Elect Ductbank		2,900.00	580	$35.81	$20,770	$4,350	$0	$0	$0	$25,120
	CONC	U.C. per lb	0.03	CN-IRON	1.305	0	0.35	0	0	1.655
Place Rebar		4,900.00	147	$43.50	$6,395	$0	$1,715	$0	$0	$8,110
	CONC	U.C. per cy	2	CN-LABR	63.16	0	80	0	0	143.16
Place, Finish & Cure Conc		82.00	164	$31.58	$5,179	$0	$6,560	$0	$0	$11,739
Subtotal WBS 9103.3.02					$32,343	$4,350	$8,275	$0	$0	$44,968
Sales Tax					$0	$0	$414	$0	$0	$414
INEEL Org Labor/Subcontractor Overheads					$18,153	$2,441	$4,877	$0	$0	$25,471
Escalation					$1,212	$163	$326	$0	$0	$1,700
Contingency					$6,205	$835	$1,667	$0	$0	$8,706
-- Total WBS 9103.3.02			**891**		**$57,914**	**$7,789**	**$15,558**	**$0**	**$0**	**$81,260**
-- **WBS 9116.3.01**										
	ELEC	U.C. per lf	0.2	CN-ELEC	7.178	0	1	0	0	8.178
Ductbank Conduit & Supports		2,900.00	580	$35.89	$20,816	$0	$2,900	$0	$0	$23,716
	ELEC	U.C. per Lf	0.032	CN-ELEC	1.148	0	0.9	0	0	2.048
3\0 wire, building feeder		3,000.00	96	$35.89	$3,445	$0	$2,700	$0	$0	$6,145
	ELEC	U.C. per Lf	0.016	CN-ELEC	0.574	0	0.5	0	0	1.074
#1 wire, ground		1,000.00	16	$35.89	$574	$0	$500	$0	$0	$1,074

Project Name:
ICDF Phase II
Project Location: ***INTEC***
Estimate Number: ***2448-D***

DIA CUSTOM GROUPING REPORT 2T

Client: ***D. K. Vernon***
Prepared By: ***J. C. Grenz***
Estimate Type: ***Project Support***

LEVEL	Org/Subcontractor	QTY	Hrs	Crew/Rate	Labor	Const Eqp	Matl	S/C	Other	TOTAL*
	ELEC	U.C. per Ls	8	CN-ELEC	287.12	0	400	0	0	687.12
Building Grounding		1.00	8	$35.89	$287	$0	$400	$0	$0	$687
Subtotal WBS 9116.3.01					$25,123	$0	$6,500	$0	$0	$31,623
Sales Tax					$0	$0	$325	$0	$0	$325
INEEL Org Labor/Subcontractor Overheads					$13,387	$0	$3,637	$0	$0	$17,024
Escalation					$924	$0	$251	$0	$0	$1,175
Contingency					$3,943	$0	$1,071	$0	$0	$5,015
-- Total WBS 9116.3.01			**700**		**$43,378**	**$0**	**$11,784**	**$0**	**$0**	**$55,162**
Subtotal CBA6731					$62,017	$6,160	$14,775	$0	$0	$82,951
Sales Tax					$0	$0	$739	$0	$0	$739
INEEL Org Labor/Subcontractor Overheads					$33,965	$3,406	$8,514	$0	$0	$45,885
Escalation					$2,304	$230	$577	$0	$0	$3,110
Contingency					$10,720	$1,062	$2,738	$0	$0	$14,520
- Total CBA6731			1,591		$109,005	$10,857	$27,342	$0	$0	$147,204

Project Name:
ICDF Phase II
Project Location: ***INTEC***
Estimate Number: ***2448-D***

DIA CUSTOM GROUPING REPORT 2T

Client: ***D. K. Vernon***
Prepared By: ***J. C. Grenz***
Estimate Type: ***Project Support***

LEVEL	Org/Subcontractor	QTY	Hrs	Crew/Rate	Labor	Const Eqp	Matl	S/C	Other	TOTAL*
- CBA6733										
-- **WBS 9102.3.03**										
	DIRT	U.C. per cy			1.47	0.94	0	0	0	2.41
Trench Excavation		13,900.00	0		$20,433	$13,066	$0	$0	$0	$33,499
	DIRT	U.C. per cy			3.76	1.14	0	0	0	4.9
Trench Backfill		13,900.00	0		$52,264	$15,846	$0	$0	$0	$68,110
Subtotal WBS 9102.3.03					$72,697	$28,912	$0	$0	$0	$101,609
Sales Tax					$0	$0	$0	$0	$0	$0
INEEL Org Labor/Subcontractor Overheads					$38,739	$15,407	$0	$0	$0	$54,145
Escalation					$2,674	$1,064	$0	$0	$0	$3,738
Contingency					$9,129	$3,631	$0	$0	$0	$12,759
-- Total WBS 9102.3.03					**$123,239**	**$49,013**	**$0**	**$0**	**$0**	**$172,252**
-- WBS 9115.3.01										
	FP	U.C. per lf	0.15	CN-PIPE	5.9	0	7.75	0	0	13.65
8" Firewater Pipe		1,200.00	180	$39.33	$7,079	$0	$9,300	$0	$0	$16,379
	FP	U.C. per lf	10	CN-PIPE	393.3	0	1260	0	0	1653.3
Fire Hydrants		2.00	20	$39.33	$787	$0	$2,520	$0	$0	$3,307
	CONC	U.C. per ea			0	0	0	0	400	400
Bollards		8.00	0		$0	$0	$0	$0	$3,200	$3,200
	FP	U.C. per ea	0.4	CN-PIPE	15.732	0	385	0	0	400.732
12 x 8 Tee		1.00	0	$39.33	$16	$0	$385	$0	$0	$401
	FP	U.C. per ea	0.35	CN-PIPE	13.765	0	85	0	0	98.765
8" Ell		1.00	0	$39.33	$14	$0	$85	$0	$0	$99
	FP	U.C. per ea	0.4	CN-PIPE	15.732	0	95	0	0	110.732
8" Tee		1.00	0	$39.33	$16	$0	$95	$0	$0	$111
	PIPE	U.C. per lf	0.12	CN-PIPE	4.72	0	2.7	0	0	7.42
6" Process/Decon Pipe		1,200.00	144	$39.33	$5,664	$0	$3,240	$0	$0	$8,904
	PIPE	U.C. per 2a	5	CN-PIPE	196.65	0	200	0	0	396.65
Freeze Proof Hydrant		2.00	10	$39.33	$393	$0	$400	$0	$0	$793
	PIPE	U.C. per ea	0.7	CN-PIPE	27.531	0	45	0	0	72.531
4" Flange Adapter		2.00	1	$39.33	$55	$0	$90	$0	$0	$145
	PIPE	U.C. per ea	1	CN-PIPE	39.33	0	15	0	0	54.33
4" Flange Ring		2.00	2	$39.33	$79	$0	$30	$0	$0	$109

Project Name:
ICDF Phase II
Project Location: ***INTEC***
Estimate Number: ***2448-D***

DIA CUSTOM GROUPING REPORT 2T

Client: ***D. K. Vernon***
Prepared By: ***J. C. Grenz***
Estimate Type: ***Project Support***

LEVEL	Org/Subcontractor	QTY	Hrs	Crew/Rate	Labor	Const Eqp	Matl	S/C	Other	TOTAL*
	PIPE	U.C. per lf	0.6	CN-PIPE	23.598	0	67	0	0	90.598
6" Ell		1.00	1	$39.33	$24	$0	$67	$0	$0	$91
	PIPE	U.C. per lf	0.7	CN-PIPE	27.531	0	75	0	0	102.531
6" Tee		1.00	1	$39.33	$28	$0	$75	$0	$0	$103
	PIPE	U.C. per lf	0.12	CN-PIPE	4.72	0	2.8	0	0	7.52
2" w/4" Waste Water from SSSTF		800.00	96	$39.33	$3,776	$0	$2,240	$0	$0	$6,016
	PIPE	U.C. per lf	0.15	CN-PIPE	5.9	0	7.45	0	0	13.35
4" w/ 8" Waste Water From ICDF		1,200.00	180	$39.33	$7,079	$0	$8,940	$0	$0	$16,019
	PIPE	U.C. per ea	10	CN-PIPE	393.3	0	45	0	0	438.3
16" Flange Adapter		6.00	60	$39.33	$2,360	$0	$270	$0	$0	$2,630
	PIPE	U.C. per ea	1	CN-PIPE	39.33	0	180	0	0	219.33
16" Flange Ring		6.00	6	$39.33	$236	$0	$1,080	$0	$0	$1,316
	PIPE	U.C. per ea	0.7	CN-PIPE	27.531	0	50	0	0	77.531
10" Flange Adapter		6.00	4	$39.33	$165	$0	$300	$0	$0	$465
	PIPE	U.C. per ea	1	CN-PIPE	39.33	0	55	0	0	94.33
10" Flange Ring		6.00	6	$39.33	$236	$0	$330	$0	$0	$566
	PIPE	U.C. per ea	8	CN-PIPE	314.64	0	28	0	0	342.64
8" Flange Adapter		16.00	128	$39.33	$5,034	$0	$448	$0	$0	$5,482
	PIPE	U.C. per ea	1	CN-PIPE	39.33	0	15	0	0	54.33
8" Flange Ring		16.00	16	$39.33	$629	$0	$240	$0	$0	$869
	PIPE	U.C. per ea	0.5	CN-PIPE	19.665	0	10	0	0	29.665
4" Flange Adapter		10.00	5	$39.33	$197	$0	$100	$0	$0	$297
	PIPE	U.C. per ea	1	CN-PIPE	39.33	0	15	0	0	54.33
4" Flange Ring		10.00	10	$39.33	$393	$0	$150	$0	$0	$543
	PIPE	U.C. per ea	2	CN-PIPE	78.66	0	124	0	0	202.66
8" Tee		2.00	4	$39.33	$157	$0	$248	$0	$0	$405
	PIPE	U.C. per ea	1.5	CN-PIPE	58.995	0	17	0	0	75.995
4" Tee		1.00	2	$39.33	$59	$0	$17	$0	$0	$76
	PIPE	U.C. per ea	1.5	CN-PIPE	58.995	0	120	0	0	178.995
8" Ell		1.00	2	$39.33	$59	$0	$120	$0	$0	$179
	PIPE	U.C. per ea	1	CN-PIPE	39.33	0	14	0	0	53.33
4" Ell		1.00	1	$39.33	$39	$0	$14	$0	$0	$53

Project Name:
ICDF Phase II
Project Location: ***INTEC***
Estimate Number: ***2448-D***

DIA CUSTOM GROUPING REPORT 2T

Client: ***D. K. Vernon***
Prepared By: ***J. C. Grenz***
Estimate Type: ***Project Support***

LEVEL	Org/Subcontractor	QTY	Hrs	Crew/Rate	Labor	Const Eqp	Matl	S/C	Other	TOTAL*
	PIPE	U.C. per mo			0	5000	0	0	0	5000
HDPE Machine		1.00	0		$0	$5,000	$0	$0	$0	$5,000
Subtotal WBS 9115.3.01					$34,573	$5,000	$30,784	$0	$3,200	$73,557
Sales Tax					$0	$0	$1,539	$0	$0	$1,539
INEEL Org Labor/Subcontractor Overheads					$21,413	$2,998	$20,505	$0	$320	$45,236
Escalation					$1,344	$192	$1,268	$0	$84	$2,888
Contingency					$4,586	$655	$4,328	$0	$288	$9,858
-- Total WBS 9115.3.01			**879**		**$61,916**	**$8,845**	**$58,424**	**$0**	**$3,893**	**$133,077**
Subtotal CBA6733					$107,270	$33,912	$30,784	$0	$3,200	$175,166
Sales Tax					$0	$0	$1,539	$0	$0	$1,539
INEEL Org Labor/Subcontractor Overheads					$60,151	$18,404	$20,505	$0	$320	$99,381
Escalation					$4,018	$1,256	$1,268	$0	$84	$6,626
Contingency					$13,715	$4,286	$4,328	$0	$288	$22,617
- Total CBA6733			879		$185,155	$57,857	$58,424	$0	$3,893	$305,329

Project Name:
ICDF Phase II
Project Location: ***INTEC***
Estimate Number: ***2448-D***

DIA CUSTOM GROUPING REPORT 2T

Client: ***D. K. Vernon***
Prepared By: ***J. C. Grenz***
Estimate Type: ***Project Support***

LEVEL	Org/Subcontractor	QTY	Hrs	Crew/Rate	Labor	Const Eqp	Matl	S/C	Other	TOTAL*
- CBA6734										
-- **WBS 9102.3.04**										
6" Sub Base	DIRT	U.C. per cy 1,100.00	0		0.97 $1,067	1.57 $1,727	20 $22,000	0 $0	0 $0	22.54 $24,794
4" AC	DIRT	U.C. per tn 1,350.00	0		0 $0	0 $0	0 $0	80 $108,000	0 $0	80 $108,000
Subtotal WBS 9102.3.04					$1,067	$1,727	$22,000	$108,000	$0	$132,794
Sales Tax					$0	$0	$1,100	$0	$0	$1,100
INEEL Org Labor/Subcontractor Overheads					$569	$920	$12,309	$57,551	$0	$71,349
Escalation					$39	$64	$850	$3,973	$0	$4,926
Contingency					$134	$217	$2,901	$13,562	$0	$16,814
-- Total WBS 9102.3.04					**$1,809**	**$2,928**	**$39,160**	**$183,086**	**$0**	**$226,982**
Subtotal CBA6734					$1,067	$1,727	$22,000	$108,000	$0	$132,794
Sales Tax					$0	$0	$1,100	$0	$0	$1,100
INEEL Org Labor/Subcontractor Overheads					$569	$920	$12,309	$57,551	$0	$71,349
Escalation					$39	$64	$850	$3,973	$0	$4,926
Contingency					$134	$217	$2,901	$13,562	$0	$16,814
- Total CBA6734					$1,809	$2,928	$39,160	$183,086	$0	$226,982

Project Name:
ICDF Phase II
Project Location: ***INTEC***
Estimate Number: ***2448-D***

DIA CUSTOM GROUPING REPORT 2T

Client: ***D. K. Vernon***
Prepared By: ***J. C. Grenz***
Estimate Type: ***Project Support***

LEVEL	Org/Subcontractor	QTY	Hrs	Crew/Rate	Labor	Const Eqp	Matl	S/C	Other	TOTAL*
- CBA6735										
-- **WBS 9102.3.05**										
	STEEL	U.C. per lf	0.15	CN-IRON	6.525	2.3	13	0	0	21.825
5' high 9 ga Chin Link Fence		5,600.00	840	$43.50	$36,540	$12,880	$72,800	$0	$0	$122,220
	STEEL	U.C. per lf	1	CN-IRON	43.5	15	83	0	0	141.5
18' Slide Gate		18.00	18	$43.50	$783	$270	$1,494	$0	$0	$2,547
	STEEL	U.C. per ea	12	CN-IRON	522	200	350	0	0	1072
20' Double Swing Gate		1.00	12	$43.50	$522	$200	$350	$0	$0	$1,072
	STEEL	U.C. per ea	4	CN-IRON	174	55	100	0	0	329
4' Swing Gate		2.00	8	$43.50	$348	$110	$200	$0	$0	$658
Subtotal WBS 9102.3.05					$38,193	$13,460	$74,844	$0	$0	$126,497
Sales Tax					$0	$0	$3,742	$0	$0	$3,742
INEEL Org Labor/Subcontractor Overheads					$20,352	$7,173	$41,877	$0	$0	$69,401
Escalation					$1,405	$495	$2,891	$0	$0	$4,791
Contingency					$4,796	$1,690	$9,868	$0	$0	$16,355
-- Total WBS 9102.3.05			**878**		**$64,746**	**$22,818**	**$133,222**	**$0**	**$0**	**$220,787**
-- **WBS 9116.3.02**										
	ELEC	U.C. per ea	10	CN-ELEC	358.9	0	600	0	0	958.9
Motor Operator		1.00	10	$35.89	$359	$0	$600	$0	$0	$959
	ELEC	U.C. per lf	0.012	CN-ELEC	0.431	0.25	0	0	0	0.681
Trenching		800.00	10	$35.89	$345	$200	$0	$0	$0	$545
	ELEC	U.C. per lf	0.002	CN-ELEC	0.072	0	0.9	0	0	0.972
Ground Wire		800.00	2	$35.89	$57	$0	$720	$0	$0	$777

Project Name:
ICDF Phase II
Project Location: ***INTEC***
Estimate Number: ***2448-D***

DIA CUSTOM GROUPING REPORT 2T

Client: ***D. K. Vernon***
Prepared By: ***J. C. Grenz***
Estimate Type: ***Project Support***

LEVEL	Org/Subcontractor	QTY	Hrs	Crew/Rate	Labor	Const Eqp	Matl	S/C	Other	TOTAL*
	ELEC	U.C. per ea								
Cadwelds		80.00	0.25	CN-ELEC	8.973	0	5	0	0	13.973
			20	$35.89	$718	$0	$400	$0	$0	$1,118
Subtotal WBS 9116.3.02					$1,479	$200	$1,720	$0	$0	$3,399
Sales Tax					$0	$0	$86	$0	$0	$86
INEEL Org Labor/Subcontractor Overheads					$788	$107	$962	$0	$0	$1,857
Escalation					$54	$7	$66	$0	$0	$128
Contingency					$232	$31	$283	$0	$0	$547
-- Total WBS 9116.3.02			**41**		**$2,553**	**$345**	**$3,118**	**$0**	**$0**	**$6,017**
Subtotal CBA6735					$39,672	$13,660	$76,564	$0	$0	$129,896
Sales Tax					$0	$0	$3,828	$0	$0	$3,828
INEEL Org Labor/Subcontractor Overheads					$21,140	$7,279	$42,839	$0	$0	$71,258
Escalation					$1,459	$503	$2,958	$0	$0	$4,920
Contingency					$5,028	$1,722	$10,152	$0	$0	$16,902
- Total CBA6735			919		$67,299	$23,163	$136,341	$0	$0	$226,803
Subtotal **TEC (TOTAL ESTIMATED COST)**					$1,143,730	$446,138	$1,188,041	$108,000	$24,800	$2,910,708
Sales Tax					$0	$0	$59,402	$0	$0	$59,402
INEEL Org Labor/Subcontractor Overheads					$703,918	$240,602	$798,454	$57,551	$2,080	$1,802,606
Escalation					$44,344	$16,482	$49,102	$3,973	$645	$114,545
Contingency					$159,089	$58,468	$173,075	$13,562	$4,928	$409,123
Total **TEC (TOTAL ESTIMATED COST)**			25,196		$2,051,081	$761,690	$2,268,074	$183,086	$32,453	$5,296,384

Appendix CC

Technical and Functional Requirements—WAG 3 INEEL CERCLA Disposal Facility Landfill and Evaporation Pond

TFR-71

TO VIEW APPENDIX CC SEE:

DOCUMENT ID NUMBER – TFR-71, REV.02

Appendix DD

Technical and Functional Requirements for the INEEL CERCLA Disposal Facility Control and Integrated Waste Tracking System

TFR-2520

TO VIEW APPENDIX DD SEE:

DOCUMENT ID NUMBER – TFR-2520, REV.0

Appendix EE

Comment Resolution Forms for the Draft Final Remedial Design/Construction Work Plan

ICDF 90% DRAFT FINAL DESIGN PACKAGE

DRAFT FINAL DOCUMENT REVIEW, COMMENT, RESOLUTION LIST – EPA[a]

DOCUMENT TITLE: General Comment

Item	Section/ Figure/ Appendix	Page	Comment	Resolution
A.	General	General	It is important that the RAWP address the issue of how the long term performance of the landfill cover will be monitored over time to insure the continued achievement of the assumed 0.0001m/yr specification?	This comment is applicable to and will be addressed in the Remedial Action Work Plan (RAWP).
B.	General	General	Although, the revisions to the Screening Level Ecological Risk Assessment correspond with past comments, there still appears to be a units conversion error in the calculation of soil exposure point concentrations. The soil contaminant concentrations used in the ecological risk assessment have not been revised. It appears as if a units conversion error in the calculation of the soil contaminant concentrations increased the contaminant concentrations by three orders of magnitude. (JS)	The soil exposure point calculations, with their associated tables and unit conversions were reexamined. The values are correct however, there was some confusion in the text and in the table headings (a mass instead of curies was indicated) and a conversion factor of a 1000 to convert kg to mg was inadvertently excluded. These have been corrected.
C.	General	General	Although, DOE/ID-10848 — ICDF Remedial Design/ Construction Work Plan, indicates that several engineering design files were 'finalized' as part of 30% and 60% design efforts, only summaries are provided for the conclusions from these EDFs. These previously completed documents should have been provided as part of the 90% review since they are still subject to revision prior to the finalization of the RD/RAWP.	The 30% and 60% design documents have been provided to the Agencies and comments incorporated. If no outstanding comments remain, the document was not included in the draft or draft final submittal. The final ICDF RD/CWP will include all pertinent documents.
D.**	General	General	Although, EDF-ER-270 (60% June 28, 2001 Document) — *ICDF Storm Water Drainage Calculations,* was not included with the 90% Draft Final design submission, an evaluation of the effect that a 500 year flood would have on water flow into the active ICDF, prior to closure, is required. <u>Suggestion:</u> Based upon an analysis presented in the 90% Appendix K of EDF-ER-281, it appears that the 500 year flood water will reach elevation 4925 at the location of the ICDF. The ICDF berm is at elevation 4929 during the active phase allowing a 4 foot resistance to wave action.	The evaluation has been performed in the Draft Final EDF-ER-281. This EDF looked at a hypothetical flood elevation of 4925 and its effect on the final cover of the ICDF. As noted in the EDF, the calculated 500 year flood plain by the Bureau of Reclamation is below the 100-year flood plain elevation of 4,917 feet which was calculated by the USGS. The text will be expanded to discuss how elevation 4,925 compares with the calculated floodplains and describe how the additional 8 feet of depth is well above the projected 500-year flood plain level.

a. Items with ** indicate comments of particular concern.

ICDF 90% DRAFT FINAL DESIGN PACKAGE

DRAFT FINAL DOCUMENT REVIEW, COMMENT, RESOLUTION LIST – EPA[a]

DOCUMENT TITLE: General Comment

Item	Section/ Figure/ Appendix	Page	Comment	Resolution
E.**	General	General	Although the study, *EDF-ER-273 (60% June 28, 2001 Document) — ICDF Permeable Reactive Barrier Decision Analysis*, evaluated whether I-129 sorption properties could be increased by use of commonly available materials serving as a reactive barrier, it did not evaluate the possibility of sorbing I-129 on Granular Silver Impregnated Activated Carbon (GSIAC), located in the sump area of the landfill. Based on limited literature information, SIAC could serve the dual role of decreasing I-129 leachate migration to groundwater in the event of a liner failure and minimize the mass of I-129 in solution that is transferred to the evaporation pond and subsequently released into the atmosphere. Although such an attenuating zone is not required to meet minimum protectiveness standards for the safe operation of the ICDF complex, it does provide an added margin of safety during the landfill operational phase, in keeping with ALARA principles and the Agencies' promise to design, construct, operate, close and post closure maintain the ICDF Complex safely. <u>Suggestion</u>: The use of an GSIAC/soil for the bottom of the sump area can achieve necessary hydraulic conductivity by setting the mean grain diameter so that 'D_{10}' in Hazen's formula is >0.1mm. Necessary compressive strength can be achieved through the use of a 6" thick permeable geogrid mattress (see Robert Koerner's "Designing with Geosynthetics' or equivalent text). The effectiveness of SIAC can be determined through a modest cost bench-scale treatability study (TS) which evaluates: 1) whether I-129 would be sorbed or precipitated out of solution within the leachate detention times expected within the sump; and 2) the effect	This issue has not been resolved to the satisfaction of EPA. It is DOE's position that the need for the PRB has not been identified in any of the design documents. Using conservative assumptions for all calculations, the landfill can safely operate within the limits of the OU 3-13 ROD and the National Contingency Plan. Operational limits will be developed during the RAWP that will provide further protection of human health and the environment. Until a technical need for the PRB is identified, DOE does not support further discussion on the implementation of the PRB.

a. Items with ** indicate comments of particular concern.

ICDF 90% DRAFT FINAL DESIGN PACKAGE

DRAFT FINAL DOCUMENT REVIEW, COMMENT, RESOLUTION LIST – EPA[a]

DOCUMENT TITLE: General Comment				
Item	**Section/ Figure/ Appendix**	**Page**	**Comment**	**Resolution**
			that other cations, anions and possibly organics have on the effectiveness of the SIAC during the landfill operational phase. Table 2-2 in EDF-ER-274 could serve as a reference for simulating leachate quality. Concerns about possible clogging of leachate collection pipes can be eliminated by the use of a gravel only filter zone in the pipe intake area.	

a. Items with ** indicate comments of particular concern.

ICDF 90% DRAFT FINAL DESIGN PACKAGE

DRAFT FINAL DOCUMENT REVIEW, COMMENT, RESOLUTION LIST – EPA[a]

DOCUMENT TITLE: EDF-ER-271, Evaporation Pond Sizing				
Item	**Section/ Figure/ Appendix**	**Page**	**Comment**	**Resolution**
1.**	Section 2, #3	2-1	The pond grading should be a minimum of 2% to the low point. Suggestion: It is difficult given the scale on Dwg C- 205 to determine if the 2% slope is accounted for in the design.	Text will be changed to state the pond grading will be performed to establish a minimum installed slope of 1 percent in accordance with the minimum slope identified in 40 CFR 264.221(c)(2)i.

a. Items with ** indicate comments of particular concern.

ICDF 90% DRAFT FINAL DESIGN PACKAGE

DRAFT FINAL DOCUMENT REVIEW, COMMENT, RESOLUTION LIST – EPA[a]

DOCUMENT TITLE: EDF-ER-274, ICDF Leachate/Contaminant Reduction Time Study (Appendix A)				
Item	**Section/ Figure/ Appendix**	**Page**	**Comment**	**Resolution**
2.	General	General	The text did not discuss the sensitivity of the results to variation in parameter concentration. For example, some contaminant mass is emitted to the atmosphere through transfer to the evaporation pond and from landfill operations. Also, the data is limited in that organics were not accounted for as they are presumed to represent <1% of the total mass fraction. Suggestion: The RAWP should address monitoring the leachate characteristics to track contaminant and concentration trends over time in order to verify that the contaminants in the landfill are hydrolyzing at the rates and ratios assumed by the modeling. The actual leachate characteristic and trends should be tracked to verify the predictions regarding the leachate characteristics. (JR)	The RAWP will address the monitoring of leachate and will present how concentration trends will be tracked over time.
3.	Section 4.1.4	4-4	Although they may not represent a >1% mass fraction, a number of organic contaminants are present in the waste that represent a significant theoretical leachate concentration, e.g., see Table A-16, benzene @ 9ppm, TCE @ 1ppm, acetone @10ppm.	The comment should refer to Table A-6. No response required. Comment noted.

a. Items with ** indicate comments of particular concern.

ICDF 90% DRAFT FINAL DESIGN PACKAGE

DRAFT FINAL DOCUMENT REVIEW, COMMENT, RESOLUTION LIST – EPA[a]

DOCUMENT TITLE: EDF-ER-275, ICDF Fate and Transport Modeling Results and Summary Report (Appendix B)				
Item	**Section/ Figure/ Appendix**	**Page**	**Comment**	**Resolution**
4.**	Section 2.1.3, 1st para	2-4	The text states that the fate and transport modeling assumes "... no influence from the wastewater disposal ponds or the Big Lost River." In previous comments made on successive stages of the ICDF design we have challenged this assumption stating that the Big Lost River, when it flows, will very likely influence the vadose zone moisture content. As part of the sensitivity discussion, the text should indicate that the predicted contaminant travel time to the Snake River Plan Aquifer may be reduced. (JR) <u>Suggestion</u>: The accuracy of predicted contaminant travel times to the Snake River Plain Aquifer without consideration of the influence of the Big Lost River on moisture content in the vadose zone is still a matter of potential concern. The degree to which the contaminants will be diluted is an additional area of uncertainty that relies solely on modeling rather without supporting data.	The text already states that the predicted travel time to the SRPA may be reduced. DOE agrees that any influence from the Big Lost River will reduce travel times. However, any influence based on modeling from the Big Lost River will also reduce concentrations.
5.	Section 2.1.3, 1st para	2-4	Although the text states that in modeling performed in 2000 by Martian the influence of the Big Lost River would result in decreased contaminant concentrations due to dilution. It is unclear of the significance of this statement in terms of regulatory or health based criteria being exceeded as there are no actual data for model calibration.	Introducing additional water in the vadose zone has to reduce contaminant concentrations and correspondingly reduce health-based risks.

a. Items with ** indicate comments of particular concern.

ICDF 90% DRAFT FINAL DESIGN PACKAGE

DRAFT FINAL DOCUMENT REVIEW, COMMENT, RESOLUTION LIST – EPA[a]

DOCUMENT TITLE: EDF-ER-275, ICDF Fate and Transport Modeling Results and Summary Report (Appendix B)				
Item	**Section/ Figure/ Appendix**	**Page**	**Comment**	**Resolution**
6.**	Section 3	3-1	The conclusion section should be changed so that it compares an ineffective cover, e.g., 0.01m/yr, against the design cover given the fact that the ineffective cover would result in an unacceptable MCL exceedance for I-129. <u>Suggestion</u>: The sensitivity analysis in Table 2-7 points out the importance of maintaining a 0.001m/yr recharge rate as the theoretical I-129 concentration at the 0.01m/yr would exceed the drinking water MCL for I-129.	On page 3-1, the phrase "if no barrier existed" will be deleted.

a. Items with ** indicate comments of particular concern.

ICDF 90% DRAFT FINAL DESIGN PACKAGE

DRAFT FINAL DOCUMENT REVIEW, COMMENT, RESOLUTION LIST – EPA[a]

DOCUMENT TITLE: EDF-ER-277, ICDF Waste Soil Design Ratio Calculations (Appendix I)				
Item	**Section/ Figure/ Appendix**	**Page**	**Comment**	**Resolution**
7.	Section 3	3-1	The assumptions and calculations do not support the presented conclusion. Table 3-1 presents debris type, total landfill volume and total debris volume. These Table 3-1 column headings can be justified. The remaining columns require an assumption that each debris type is the only debris placed into the landfill. This is not a realistic assumption to justify the conclusion of a stable waste fill. Table 3-1 requires revision to integrate the various debris types. More discussion is required on how the soil achieves a stable waste fill. (RH) (EPA #43). The resolution of this comment (EPA #43) is acceptable if this language is incorporated into the EDF text.	Comment will be incorporated. The table was not meant to summarize or justify a stable waste fill, but the placement diagrams demonstrate access by compaction equipment and significant volumes of soil around containers based on maintaining a stable waste fill. The main intent of this table was to summarize the expected soil to debris ratios calculated and compare with the volumes anticipated for disposal at the landfill. The text will be changed to clarify this intent.

a. Items with ** indicate comments of particular concern.

ICDF 90% DRAFT FINAL DESIGN PACKAGE

DRAFT FINAL DOCUMENT REVIEW, COMMENT, RESOLUTION LIST – EPA[a]

DOCUMENT TITLE: EDF-ER-278, Liner/Leachate Compatibility Study				
Item	**Section/ Figure/ Appendix**	**Page**	**Comment**	**Resolution**
8.	Section 1.4, 1st para	1-2	The compatibility of the landfill liner with leachate is a concern throughout the life of the landfill post- closure care period which far exceeds the 30 years mentioned.	Text will be changed to differentiate between the leachate compatibility of the synthetic liner systems and the natural clay. The natural clay liner system is expected to last for thousands of years while the synthetic systems may last for hundreds of years. Clarification will be provided in the text to indicate no compatibility issues with the liners for extended periods of times.
9.	Section 1.5, 4th para	1-4	It is unclear what the assumption of a 4cm maximum depth of leachate is based on, especially in the sump area?	The 4 cm was calculated as the maximum head on the liner system outside the sump area. Based on the evaporation pond depth of 36 cm, even the maximum 12-in. head on the liner would be acceptable.
10.**	Section 1.6, 1st para	1-5	The designed absorbed dose from Sr-90 alone is 0.062 rads/hr. Further, the design life for the landfill liner is not 15 years. It could be argued that the design life is 1,000 years and the design life for the pond is 45 years. <u>Suggestion</u>: A 45 year design requirement would subject the liner to 35.5 krads and 1,000 years would equate to 788 krads.	The design life for the synthetic layers will be revised to indicate expected life may be well beyond the minimum 45 years. Also the clay liner is not susceptible to degradation based on radiation and therefore will last for greater than 1,000 years. Based on radiation absorbed dose, the HDPE liner is not expected to be degraded below acceptable levels for mechanical properties.
11.	Section 3.1, Table 3-1	3-1	Please correct the design inventory dose for radionuclides to 800,000 rads due to 1,000 year vs. 15 year design basis.	Synthetic liner systems have a minimum design life of 45 years and the clay liner system is not susceptible to degradation from radiation. Text will be clarified to indicate potential life of liner systems is well beyond the minimum of 45 years. Based on radiation absorbed dose, the HDPE liner is not expected to be degraded below acceptable levels for mechanical properties.

a. Items with ** indicate comments of particular concern.

ICDF 90% DRAFT FINAL DESIGN PACKAGE

DRAFT FINAL DOCUMENT REVIEW, COMMENT, RESOLUTION LIST – EPA[a]

DOCUMENT TITLE: EDF-ER-279, ICDF Hydrologic Modeling of Final Cover (Appendix M)				
Item	**Section/ Figure/ Appendix**	**Page**	**Comment**	**Resolution**
12.**	Section 3.2, 2nd para	3-3	The selection of a poor stand of grass along with the SCS run-off curve number of 79 tends to increase the amount of water run-off from the landfill cap. These assumptions maybe realistic, but the range of alternatives should have been modeled since this is a facility constructed to design specifications. For example, what happens if the grass stand is good and more infiltration occurs? (RH)	The text will be clarified by adding sentences as follows: The runoff from the cover system was modeled to promote infiltration. However if a good stand of grass is established it would decrease the infiltration due to increased evapotranspiration.
13.	Section 2, Figure 2-1	2-1	Does the note that appears just above the figure refer to the soil bentonite liner or if the word "layer" is correct, please indicate which layer is being referred to. (JR)	The note will be clarified to refer to the specific layers that are referred to. Horizons E and F refer to the entire layer and are the locations where percolation was determined.
14.	Section 3.3.1, 1st para	3-3	The original comment on the draft document questioned how the filter type 2 well graded sediment will be kept from migrating into the bio intrusion layer resulting in a reduction of the function of the capillary break. The text does not mention the use of a geomembrane although that was mentioned when the comment was discussed in the Seattle comment resolution meeting. The text should specify the use of a geomembrane and direct the reader to Section 4 of EDF 281 where the expected effective life of these materials are discussed. (JR)	The filter layers have been designed using standard geotechnical filter criteria to prevent any migration. No geomembranes were specified because they are not required. The reference to EDF 281 where the filter calculations have been presented will be included in the text.
15.	Section 3.3.2, Table 3-3	3-5	The SBL value should be corrected to reflect design minimum, given that the Test Pad permeability results did not demonstrate that the required 1×10^{-7} cm/s permeability will be achieved.	The regulations specify the cap must be less permeable than the bottom liner system and therefore this value was selected to meet this requirement. The future selection of the cap barrier material will be required to meet this maximum hydraulic conductivity. A new test pad will be required to demonstrate that Boutwell tests or other larger scale permeability tests will meet this minimum hydraulic conductivity.

a. Items with ** indicate comments of particular concern.

ICDF 90% DRAFT FINAL DESIGN PACKAGE

DRAFT FINAL DOCUMENT REVIEW, COMMENT, RESOLUTION LIST – EPA[a]

DOCUMENT TITLE: EDF-ER-279, ICDF Hydrologic Modeling of Final Cover (Appendix M)				
Item	**Section/ Figure/ Appendix**	**Page**	**Comment**	**Resolution**
16.	Section 4.3	4-5	The section discusses a single burrow as representing 0.005mm/yr infiltration and states that the total infiltration from burrowing animals is 0.015mm/yr representing only 3 burrows on the landfill. Given the pocket mouse frequency is 2.9 burrows per 100m transect it is unclear the basis for this assumption? Suggestion: It would appear that a more appropriate number burrows for Cells 1 & 2 of the landfill is 16+ resulting in a net infiltration of ~0.1mm/yr.	Comment incorporated by clarifying that the additional infiltration due to 16+ pocket mouse burrows would be 0.16 mm/yr through the water storage layer. Adding this to the infiltration due to natural infiltration totals 0.62 mm/yr which still produces less than 0.1 mm/yr infiltration through the clay cap barrier layer.

a. Items with ** indicate comments of particular concern.

ICDF 90% DRAFT FINAL DESIGN PACKAGE

DRAFT FINAL DOCUMENT REVIEW, COMMENT, RESOLUTION LIST – EPA[a]

DOCUMENT TITLE: EDF-ER-280, Landfill Leachate Collection System				
Item	**Section/ Figure/ Appendix**	**Page**	**Comment**	**Resolution**
17.	Section 1	1-1	The design criteria of maintaining runoff for a leachate collection system is unclear.	This text will be changed to state: "The leachate collection system has been designed to handle the runoff from a 25-year, 24-hour storm."
18.	Section 1	1-1	The landfill system sump should have sufficient aerial extent to allow accumulation of multiple day normal precipitation without exceeding the 1ft leachate heigth limitation.	The sump capacity currently provides storage for approximately 9,260 gallons assuming a porosity of 0.33. This will be included in the text.
19.	Section 1	1-1	According to Dwg C-202, the minimum slope to the drainage is 2% and it should starte that here. A 1% slope is inadequate for drainage.	Text will be revised to state the minimum slope is 2%.
20.	Section 2.4	2-2	Providing D_{10} data in Appendix A would assist in determining whether screened native soils are acceptable based on the particle size distributions, for meeting the 10^{-2} cm/s requirement for the drainage layer.	The data is provided on page A-31 of Appendix A.4. The D_{10} for the gradation will also be identified.
21.**	Section 3.2.1.2	3-3	Although an ALR is given for the surface impoundment, nothing is said for the landfill. Based on reference EPA 1992b, the ALR for the landfill detection system should be less than 100 gpad.	The specific calculation for the ALR for the landfill is contained in the Leachate Generation Study, EDF-ER-269. A calculation identifying the gpad based on the ALR calculation will be included.

a. Items with ** indicate comments of particular concern.

ICDF 90% DRAFT FINAL DESIGN PACKAGE

DRAFT FINAL DOCUMENT REVIEW, COMMENT, RESOLUTION LIST – EPA[a]

DOCUMENT TITLE: EDF-ER-281, Liner and Final Cover Long-Term Performance Evaluation (Appendix J)				
Item	**Section/ Figure/ Appendix**	**Page**	**Comment**	**Resolution**
22.**	Appendix B		The analysis for puncture resistance of a geotextile was recalculated based upon previous comments. The reference method is of most use when the geotextile serves as a structural component between layers. Professor Koerner in the cited reference also provides an analysis method on page 535 about puncture protection for a geomembrane. Based on our calculations the geotextile cushion on the FML and the puncture resistance is too low. (RH)	CH2M Hill has performed the calculations cited in Professor Koerner's book and determined the 12-oz cushion geotextile is adequate. Additional calculations will be included in the revised EDF.
23.	Section 5.2, 4th para	5-1	The text states that "The ICDF will lie within alluvial, aeolian and lacustrine sediments deposited over millions of years ago by the Big Lost River." However, the text states further that the ICDF landfill is outside the river flood plain, but that the sediments were deposited over millions of years ago by the Big Lost River. The ICDF excavation exposed sediments that, based on field observation, are the result of depositional processes associated with the Big Lost River. Glacial activity is believed to have occurred in the area as recently as tens of thousands of years ago, but the event the text refers to as occurring millions of years ago is not clear. Additional information, editing or references are needed to support the apparently contradictory statements in this section of the text. (JR)	Text will be changed to clarify the following points: 1. Existing Big Lost River floodplain is the 100-year floodplain. 2. The text concerning the geologic history.

a. Items with ** indicate comments of particular concern.

ICDF 90% DRAFT FINAL DESIGN PACKAGE

DRAFT FINAL DOCUMENT REVIEW, COMMENT, RESOLUTION LIST – EPA[a]

DOCUMENT TITLE: EDF-ER-290, ICDF NESHAP Modeling (Appendix O)				
Item	**Section/ Figure/ Appendix**	**Page**	**Comment**	**Resolution**
24.			While author's note says to be included with 90% Draft Final design submission, no submission was included in 90% draft final? We assume that DOE has not changed this document from the 8/31/01 submission?	The author's note says the document will be provided in the Final. There have been no changes to this document.

a. Items with ** indicate comments of particular concern.

ICDF 90% DRAFT FINAL DESIGN PACKAGE

DRAFT FINAL DOCUMENT REVIEW, COMMENT, RESOLUTION LIST – EPA[a]

DOCUMENT TITLE: EDF-ER-311, Screening Level Ecological Risk Assessment for the ICDF Complex (Appendix R)				
Item	**Section/ Figure/ Appendix**	**Page**	**Comment**	**Resolution**
25.	Section 1.1.1	6	The section of the ecological risk assessment describing how the soil exposure point concentrations were calculated has been expanded to include the density of landfill material (1500 kg/m^3). The description of how the soil contaminant concentrations are calculated was enhanced to provide the equations used. However, there still appears to be an error in units conversion which results in the organic and inorganic contaminant concentrations being three orders of magnitude higher? (JS)	The soil exposure point calculations, with their associated tables and unit conversions were reexamined. The values are correct however, there was some confusion in the text and in the table headings (a mass instead of curies was indicated) and a conversion factor of a 1000 to convert kg to mg was inadvertently excluded. These have been corrected.

a. Items with ** indicate comments of particular concern.

ICDF 90% DRAFT FINAL DESIGN PACKAGE

DRAFT FINAL DOCUMENT REVIEW, COMMENT, RESOLUTION LIST – EPA[a]

DOCUMENT TITLE: DOE/ID-10851, ICDF CQA Plan for the INEEL CERCLA Disposal Facility (Appendix X)				
Item	**Section/ Figure/ Appendix**	**Page**	**Comment**	**Resolution**
26.	Section 2.1.2.10	1-7	The CQA certifying officer should be given the authority to recommend a work stoppage and/or possible remedial actions to DOE and the Regulating Agencies. (WF)	The organization chart will be modified to say: "The CQA certifying officer has the authority and responsibility to stop work and recommend remedial actions to the regulatory Agencies." In addition, the text will be clarified to indicate the independence of the CQA certifying officer.
27.	Section 2.1.2.10	1-7	The text states that the CQA certifying officer should be an independent third-party, however the organization chart shows the position responsible to the field representative of the ICDF project manager. This will not allow the CQA certifying officer to be independent, and will not give the authority to recommend a work stoppage. (WF)	The organization is mandated by contractual agreements. The CQA certifying officer does have the authority to stop work as described in the response to Comment 26.
28.**	General		This document requires revision to include procedures for performing aspects of Phase I over given the results of the test pad field and laboratory permeability results. A major purpose of the test pad is to demonstrate that the minimum liner requirements can be achieved based on field measurements.	The recommended additional test pad construction and testing will be included in the final document. The additional test pad will be started as soon as possible to minimize schedule delays.

a. Items with ** indicate comments of particular concern.

ICDF 90% DRAFT FINAL DESIGN PACKAGE

DRAFT FINAL DOCUMENT REVIEW, COMMENT, RESOLUTION LIST – EPA[a]

DOCUMENT TITLE: DOE/ID-10865, Waste Acceptance Criteria for ICDF Landfill (Appendix P)				
Item	**Section/ Figure/ Appendix**	**Page**	**Comment**	**Resolution**
29.	Section 4.1.3, Table 4-2		In the resolution to comment #36 in the 90% document the text states that "DOE will supply a discussion and comparison table of the conservatism used to develop the [WAC] limits." Where is this information in the Draft Final document? (AP)	This information is included in Appendix F of DOEID-10865.
30.	Appendix A, 2nd bullet	A-4	It is unclear how background is being accounted for here. As we have stated repeatedly, risk-based concentrations, e.g., MCLs are not alowed to be exceeded. This includes MCLs exceeded due to an incremental increase above background. This bullet appears to imply that if the incremental increase were below background, the contaminant release could go as high as 10X?	Agree with concept. The existing background concentrations in the SRPA will be reviewed to evaluate if any modifications are required to the allowable waste concentrations.
31.**	General		The known inventory of wastes destined for the ICDF landfill relies on CWID data that, as has been discussed in previous reviews, is limited in its analytical accuracy and the number of samples collected to characterize the extent of contamination. The potential inaccuracy of the CWID data is an additional reason to consider the use of a safety factor in determining the WAC limits, rather than 'maximize' WAC limits. (JR) <u>Suggestion</u>: The Waste Acceptance QA program will provide an opportunity to assess the accuracy of the design inventory.	The waste acceptance process will track the actual waste to be disposed in the ICDF landfill. This information will be used to ensure that all wastes are within the WAC and operational limits identified in the RAWP.

a. Items with ** indicate comments of particular concern.

ICDF 90% DRAFT FINAL DESIGN PACKAGE

DRAFT FINAL DOCUMENT REVIEW, COMMENT, RESOLUTION LIST – EPA[a]

DOCUMENT TITLE: DOE/ID-10866, WAC for ICDF Evaporation Pond (Appendix Q)				
Item	**Section/ Figure/ Appendix**	**Page**	**Comment**	**Resolution**
32.	Section 4	4-1	Only Table 4-1 was located. Table 4-2 is referenced but not published? (RH)	The reference to Table 4-2 will be changed to Table 4-1.

a. Items with ** indicate comments of particular concern.

ICDF 90% DRAFT FINAL DESIGN PACKAGE

DRAFT FINAL DOCUMENT REVIEW, COMMENT, RESOLUTION LIST – EPA[a]

DOCUMENT TITLE: DOE/ID-10878, ICDF Drawings (Appendix Z)				
Item	**Section/ Figure/ Appendix**	**Page**	**Comment**	**Resolution**
33.	Drwg. C-201		Please explain the potential CERCLA storage area, Note 9. The side slope test pad area must include area on both the bottom and side slope of the landfill. Other comments about the test pad are included under the test pad report. (RH)	The CSA is an area where waste containers are temporarily placed for accumulation of wastes and awaiting characterization and/or disposal. Note 9 indicates this area will be field located based on activities being performed in the field. The horizontal component of the test pad will be included in the CQA Plan, Section 02666 of the technical specifications, and shown on the drawings in the final document.
34.**	Drwg. P-207		Will the leachate cleanout pipe provide opportunity for manual readings of leachate level in sump?	Each leachate cleanout pipe will provide access for manual readings of leachate levels.
35.	Drwg. P-209		Detail "A" does not illustrate LCRS piping nor could this piping be found at any detail other than Detail "C4" on Drawing P-206. (RH)	No LCRS piping is required or will be provided in the evaporation pond. No hard piping is provided for removal of liquids from the evaporation pond. This operation will be included in the RAWP.
36.	Drwg. P-210		On Detail "1", what is the purpose of the ½" air connection and is the valve designed to prevent accidental discharges? (RH)	The purpose of the air connection is to purge the pipe prior to any potential maintenance operations. The air valve will be a standard air connection and the only potential for leakage is during connection of an air hose. The containment slab will collect any drips or discharges during this operation.

a. Items with ** indicate comments of particular concern.

ICDF 90% DRAFT FINAL DESIGN PACKAGE

DRAFT FINAL DOCUMENT REVIEW, COMMENT, RESOLUTION LIST – EPA[a]

DOCUMENT TITLE: DOE/ID-10955, ICDF Complex Groundwater Monitoring Plan (Appendix S)				
Item	**Section/ Figure/ Appendix**	**Page**	**Comment**	**Resolution**
37.**	Section 3.2.2	3-2	Determining if concentration increases are related to decreased perched water levels or releases from the ICDF complex, will be difficult to substantiate. The presumption will be that statistical increases in detection monitoring wells are associated with a release from the ICDF Complex.	See response to DEQ Comment #47. In addition, the initial perched water wells network is used to gain information on the baseline. An acceptable statistical approach will be determined in the detection monitoring evaluation criteria for the perched groundwater.
38.	Section 3.2.4	3-3	This section is missing the likely corrective measures that will be taken if a release is identified in the perched water and SRPA monitoring program. Please include the corrective measures in this section, as they are an important part of the DQO seven step process as previously discussed. (AP)	Corrective measures are outside the scope of this Groundwater Monitoring Plan which is required to meet the substantive requirements of RCRA detection monitoring. Corrective measures will be provided upon confirmation of a leak as required by the regulations.
39.	Section 3.3, Item 8	3-4	This section states that "Techniques to evaluate ICDF Complex perched water and SRPA data will be outlined in the ICDF Complex RAWP." Please indicate why the reviewer(s) will be given only one chance to review, documentation in the RAWP, on these techniques. (AP)	The RAWP is the primary document. As such, it will go through all the reviews outlined in the FFA/CO for primary documents.
40.	Table 3-1	3-10	This table indicates that leachate sampling will include two radionuclides (Sr-90 and Tc-99) for years one and beyond ICDF Complex Operations. Why were these two radionuclides chosen and not a longer list? Please explain. (AP)	These indicator parameters were agreed upon by the EPA, IDEQ, and DOE based on prevalence in waste (Sr-90) and low distribution coefficient (Tc-99). The indicator contaminants may be adjusted up or down based upon the results from the baseline sampling. A larger set of radionuclides will be analyzed during baseline sampling and every 2.5 years thereafter.
41.**	Table 4-5	4-4	This table indicated that QA/QC samples will be collected at a frequency of one per 20 samples for groundwater samples. However, 20 samples most likely will not be collected at each groundwater sampling event. Therefore, in order for this critical data to be defensible and useful, QA/QC samples should be collected at a frequency of one sample per 20 samples or once per sample day, whichever is more frequent. Please correct the text in order to maintain known quality for this project. (AP)	Field blanks will be collected at a frequency of 1 per 20 samples or 1 per 4 sampling days (whichever results in a greater number of QA/QC samples) per scheduled sampling event (baseline, semiannual, etc.). In addition, the text will be clarified to indicate that if less than 20 samples are collected, 1 QC sample will be collected. If 21 to 40 samples are collected, 2 QC samples will be collected.

a. Items with ** indicate comments of particular concern.

ICDF 90% DRAFT FINAL DESIGN PACKAGE

DRAFT FINAL DOCUMENT REVIEW, COMMENT, RESOLUTION LIST – EPA[a]

DOCUMENT TITLE: DOE/ID-10955, ICDF Complex Groundwater Monitoring Plan (Appendix S)				
Item	**Section/ Figure/ Appendix**	**Page**	**Comment**	**Resolution**
42.	Figure 2-6	2-9	Although the data presented is useful, it would be more compelling if daily readings were recorded and analyzed to assess the correlation, if any, between perched water wells and peak river flows.	Although daily readings are available for the river, water levels in the perched water wells were not recorded daily. Actual data were provided to the EPA and IDEQ as previously requested. Correlation coefficients were extremely low, meaning that the Big Lost River (BLR) is not a direct influence on the perched water. The water elevations monitoring frequency will be addressed in the RAWP.
43.	Section 4.4	4-4	This section includes corrective measures, however it is only three sentences long. Please include detailed corrective measures that will be taken if discrepancies arise in the field and during the laboratory analysis. For example, if the laboratory calibration is out of control, then all associated samples will be re-analyzed. (AP)	Section 4.3.1 of the QAPjP (Revision 7) discusses corrective action. Additional corrective actions will be identified in the RAWP.
44.**	Section 3.7, Figure 3-2	3-7	This figure indicates an annular space of less than two diameters of the of the intermediate casing size. Water well industry standards, and many state well construction regulations specify two casing diameters to insure an adequate annular seal. (JR)	The figure will be modified. This design is in compliance with State of Idaho regulations, which specifies two nominal casing sizes (not two casing diameters) will be used for permanent casing. There are more than two nominal casing sizes between the 6 inch casing and the temporary intermediate casing. This design allows more than adequate annular space for a 1" or 1 ¼" tremie pipe. The figure is a conceptual design and may be altered due to field conditions but the well will meet State of Idaho regulations.

a. Items with ** indicate comments of particular concern.

ICDF 90% DRAFT FINAL DESIGN PACKAGE

DRAFT FINAL DOCUMENT REVIEW, COMMENT, RESOLUTION LIST – EPA[a]

DOCUMENT TITLE: DOE/ID-10955, ICDF Complex Groundwater Monitoring Plan (Appendix S)				
Item	**Section/ Figure/ Appendix**	**Page**	**Comment**	**Resolution**
45.**	Section 3.7, 2nd para	3-8	The text states that "If no saturated zones are encountered...the three completion intervals that are most likely to encounter water in the future from a possible source." The statement should clarify that the completion intervals will be selected at depths that are likely to develop water as a result of downward infiltration from any of several potential surface water sources. The Big Lost River, for instance, is known to infiltrate the vadose zone and result in shallow perched water adjacent to the river and a greater depths farther away from the river. Correlated depths of corresponding lithologies should be compiled during the drilling activities and considered in the selection the monitoring well completion intervals if no saturated zones are encountered. (JR)	The last sentence of the comment will be included in the GWMP to better define how the completion zones will be determined if no water is encountered.
46.	Section 1.2, Last para	1-4	According to the text it suggests that compliance with contaminant MCLs extends only to the 2095 date. Please modify the sentence so that protection of SRPA is perpetual and not limited to 2095. (JR)	The text will be changed.
47.	Section 5.3, 1st para	3-2	The text states that "...a purge rate that will maintain a constant stagnant water level.." A constant or steady water level elevation while pumping a well is generally referred to as a dynamic pumping level. Please amend the text for clarity as the term stagnant has other implications in reference to purging wells. (JR)	The term "stagnant" will be removed. The text will be reworded to clarify that this section refers to low flow purging technology.
48.	Section 3.7, Figure 3-3	3-9	This figure indicates PVC casing will be used to construct the monitoring wells. Due the depth of the deepest monitoring zones, however, and the height of the cement grout column that will produce heat and pressure on the PVC while constructing these wells, steel casing should be used. (JR)	The heat of hydration and effects upon PVC well casing are well understood. This will not be an issue if the grout lift per pour is limited to within acceptable ranges.

a. Items with ** indicate comments of particular concern.

ICDF 90% DRAFT FINAL DESIGN PACKAGE

DRAFT FINAL DOCUMENT REVIEW, COMMENT, RESOLUTION LIST – EPA[a]

DOCUMENT TITLE: DOE/ID-10955, ICDF Complex Groundwater Monitoring Plan (Appendix S)				
Item	**Section/ Figure/ Appendix**	**Page**	**Comment**	**Resolution**
49.	Section 5.3, 2nd para	5-1	The text states that "This purge volume will be different for each well within the monitoring network due to differing lengths of discharge tubing." The tube length will depend on either the water level or the screen depth and will actually dictate the purge time as well as the tube length. (JR)	This will be reworded to be more clear.
50.	Section 5.3, 3rd para	5-1	The text refers to a static water level during purging and sampling, which in the case of low capacity wells may not be possible. In most cases as the wells are purged and the water level will initially decline from static and then attain a stead pumping or dynamic water level as noted previously. Please amend the text using the correct term. (JR)	Text will be changed to clarify that a constant water level will be ensured when using low flow purging technologies.

a. Items with ** indicate comments of particular concern.

ICDF 90% DRAFT FINAL DESIGN PACKAGE

DRAFT FINAL DOCUMENT REVIEW, COMMENT, RESOLUTION LIST – EPA[a]

DOCUMENT TITLE: SPC-1476, Technical Spec for the ICDF (Appendix Y)				
Item	**Section/ Figure/ Appendix**	**Page**	**Comment**	**Resolution**
51.	Section 02371, Section 2, Line 1	2 of 5	The 12 ounce geotextile has been revisited by the design engineer in EDF-ER-281 and EPA comments are provided for that analysis. <u>Suggestion</u>: Page 147 in "Designing with Geosynthetics" discusses how the reduction factor is a modification of the data uncertainty compared to a factor of safety. Although not presented to its final conclusion, the global factor of safety for the EDF-ER-281 analysis is slightly less than 2.0, which is acceptable for this calculation, not the 4.0 presented in the resolution of EPA comment #74. (RH)	See response to Comment #22.
52.**	Section 02315, Section 2, Line 35	2 of 6	The drain gravel allows 5% passing the #10 sieve and the operations layer allows 5% passing the 200 sieve. Considering the largest particle size allowed is 2" for both, should the drain gravel be more restrictive, say 2% passing the # 10 sieve? The Drain sand allows a maximum particle size of 1" with a maximum of 10% passing the #200 sieve. This appears to be a wide range of particle sizes to be allowed for a material described as sand. (RH)	The drain gravel with 5% passing the No. 200 sieve meets the hydraulic conductivity requirements and also meets the filter criteria. The 2% passing the 200 sieve is considered excessively restrictive without improving the hydraulic conductivity. The sand is only used for pipe bedding and additional maximum particle size requirements for specific pipe materials is further defined in the technical specifications, Section 02320.

a. Items with ** indicate comments of particular concern.

ICDF 90% DRAFT FINAL DESIGN PACKAGE

DRAFT FINAL DOCUMENT REVIEW, COMMENT, RESOLUTION LIST – EPA[a]

DOCUMENT TITLE: TFR-71, T&FRs-WAG 3 ICDF and Evaporation Pond (Appendix CC)				
Item	**Section/ Figure/ Appendix**	**Page**	**Comment**	**Resolution**
53.	Section 1.7, Item L	6	This section states, "Waste arriving at the ICDF will be limited to one waste profile per container." Please include in the text DOE's previous response, which was, "The Waste Profile will be based on the waste stream. There may be more than one container per profile but if the waste content changes a new Waste Profile will be required. Mixing waste streams within containers will not be allowed." (AP)	Comment noted. No change to the document. This will be addressed in the RAWP.

a. Items with ** indicate comments of particular concern.

ICDF 90% DRAFT FINAL DESIGN PACKAGE

DRAFT FINAL DOCUMENT REVIEW, COMMENT, RESOLUTION LIST – EPA[a]

DOCUMENT TITLE: EDF-2899, ICDF Test Pad Construction Report (Appendix U)				
Item	**Section/ Figure/ Appendix**	**Page**	**Comment**	**Resolution**
54.**	Section 2.2.2, Mixing	3	State the methodology used to determine that the spreader was not able to distribute the bentonite evenly. The field construction report for August 17, 2001 states that there were two methods for calculating bentonite spread rates: sacks used versus amounts sampled and calculated, and also that the contractor decided that more bentonite was required. Summary calculations that predict the range of bentonite actually used should be provided. At a minimum the total weight of bentonite used, and the amount of borrow soil treated should be quantified. (WF)	QA and QC personnel did calculations that predict the range of bentonite to be used. These calculations will be included in the Final Test Pad Report.
55.	Section 2.2.2, Mixing	3	The field calculations are very difficult to understand. As stated previously, at a minimum, the total weight of bentonite used, and the amount of borrow soil treated should be quantified. (WF)	Field calculations will be revised and summarized for clearer understanding and will be included in the Final Test Pad Report. Field calculations will include total weight of soil and total weight of bentonite.

a. Items with ** indicate comments of particular concern.

ICDF 90% DRAFT FINAL DESIGN PACKAGE

DRAFT FINAL DOCUMENT REVIEW, COMMENT, RESOLUTION LIST – EPA[a]

DOCUMENT TITLE: EDF-2899, ICDF Test Pad Construction Report (Appendix U)

Item	Section/ Figure/ Appendix	Page	Comment	Resolution
56.	Section 4.5, Field In-place moisture Density	7	Our previous comments on the 90% RD included two graphs as an attachment. The graph of rapid vs oven- dry moisture contents shows that a correction factor of about 0.5 percent, which is shown as the dashed line, should be subtracted from the rapid moisture contents to reduce systematic errors. The graph of rapid versus sand cone wet densities shows a large scatter. This scatter implies that operator error with one or both of the tests is too large to determine a correction factor. If the three data points in the lower right corner of the graph are eliminated as outliers, the graph shows that a correction factor of about 2 pcf, which again is shown by the dashed line, should be subtracted from the rapid wet densities to reduce systematic errors. Both graphs show a thinner line that would correspond to the condition that required no correction for systematic errors. (WF) <u>Suggestion</u>: The EPA Technical Guidance Document, Quality Assurance and Quality Control for Waste Containment Facilities Technical Guidance Document, Quality Assurance and Quality Control for Waste Containment Facilities - EPA/600/R-93/182, September 1993, includes a method to minimize systematic errors with the rapid moisture content (ASTM D3017) and total density (ASTM D2922) measurements. The method includes two graphs: one plots the rapid moisture contents against oven-dry moisture contents (ASTM D2216), and the other plots rapid total densities against the densities determined by the sand cone (ASTM D1556).	These graphs will be prepared for the additional test pad for during the production clay placement operations to evaluate correlation between rapid versus oven-dry moisture content.

a. Items with ** indicate comments of particular concern.

ICDF 90% DRAFT FINAL DESIGN PACKAGE

DRAFT FINAL DOCUMENT REVIEW, COMMENT, RESOLUTION LIST – EPA[a]

DOCUMENT TITLE: EDF-2899, ICDF Test Pad Construction Report (Appendix U)

Item	Section/ Figure/ Appendix	Page	Comment	Resolution
57.**	Section 4.5, Field In-place moisture Density	7	Moisture content: A graph plotting the nuclear gauge moisture content against the oven-dried moisture content should be prepared using the fifteen tests from the test pad. This graph should accumulate more data points as testing continues through cell construction. The test pad tests show that gauge corrections range from +0.3 to -2.4 percent with an average of -0.7 percent. The EPA Technical Guidance Document, Quality Assurance and Quality Control for Waste Containment Facilities includes this method to minimize systematic errors with the nuclear gauge moisture content. (WF)	A graph plotting the nuclear gauge moisture content against the oven-dried moisture content will be prepared for the additional test pad and for the production SBL operations.
58.	Section 4.5, Wet density:	7	The sand cones performed at the test pad had a large scatter, +6.3 to -3.6 pounds per cubic foot as compared to the nuclear gauge. The large concrete reference block is a reasonable solution to reducing this large scatter of results for wet density. (WF)	Comment acknowledged.
59.**	Section 4.5, Field In-place moisture Density	7	Page 12, §4.7 Field Permeability- Boutwell Permeameter. Eight of the 12 field permeabilities measured with the single stage Boutwell permeameters were higher than the acceptable limit of 1.0×10^{-7} cm/sec. This failure rate of well over 50 percent implies that additional field permeability testing is required. (WF) <u>Suggestion</u>: Two stage tests, that can be used to evaluate the horizontal permeability, would probably be particularly useful.	Additional field permeability testing will be performed as part of the Phase 2 test pad.

a. Items with ** indicate comments of particular concern.

ICDF 90% DRAFT FINAL DESIGN PACKAGE

DRAFT FINAL DOCUMENT REVIEW, COMMENT, RESOLUTION LIST – EPA[a]

DOCUMENT TITLE: EDF-2899, ICDF Test Pad Construction Report (Appendix U)

Item	Section/ Figure/ Appendix	Page	Comment	Resolution
60.**	Section 5.2, Clay Material Testing, Figure 1	13-14	Figure 1 contains plotting errors. The errors include showing only 9 of the 11 failing tests, and incorrectly plotting the water contents and dry densities for 6 of the passing tests. The 11 failing tests conflicts with the 6 failures stated in the text on the top of page 14. An explanation for this conflict is required. The failure rate of 11 in 40 tests for the laboratory testing combined with the very high failure rate for the field testing leads us to conclude that the test pad did not produce an acceptable clay liner. Further, Figure 1 shows irregularities in predicting permeability using water content and dry density for densities below 104 pounds per cubic foot. Because the mixing of bentonite into a borrow material that had consistent soil types should have produced a particularly uniform material, predicting permeabilities from a graph such as Figure 1 should be possible. An explanation for the irregularities is that the roller did not remove void spaces that can occur at clod interfaces, lift interfaces, shear surfaces, and dessication cracks. A reduced loose lift thickness that corresponds to the depth of the penetrating feet on the roller could be part of the solution to this problem. (WF)	The figure will be revised to correctly plot the water contents and dry densities.
61.**	Section 4.7, Field Permeability-Boutwell Permeameter	12	The rationale for not performing a two stage test should be stated. The two stage test is particularly useful because it can evaluate the horizontal permeability for the material. The horizontal permeability can be as much as ten times higher than the vertical permeability. (WF)	The first stage of the Boutwell test is a conservative estimate of the vertical hydraulic conductivity.

a. Items with ** indicate comments of particular concern.

ICDF 90% DRAFT FINAL DESIGN PACKAGE

DRAFT FINAL DOCUMENT REVIEW, COMMENT, RESOLUTION LIST – EPA[a]

DOCUMENT TITLE: EDF-2899, ICDF Test Pad Construction Report (Appendix U)				
Item	**Section/ Figure/ Appendix**	**Page**	**Comment**	**Resolution**
62.	Section 5.2, Clay Material Testing	13	The window of acceptable dry density and moisture contents shown in Figure 1 will probably have to be expanded for working on the 3H:1V slope. The reduced compaction energies that result from working on a slope will lower the range of field densities. The window should be expanded along the wet limb of the compaction curve. An additional standard Proctor test should be added because the highest moisture content typically permitted for a compacted clay liner is about three or four percent wet of the standard Proctor optimum. (WF) (*See previously attached graph* to draft 90% comments -EPA #73).	The acceptable moisture-density window has been expanded in the draft final document and will be confirmed during the Phase 2 test pad.

a. Items with ** indicate comments of particular concern.

ICDF 90% DRAFT FINAL DESIGN PACKAGE

DRAFT FINAL DOCUMENT REVIEW, COMMENT, RESOLUTION LIST – EPA[a]

DOCUMENT TITLE: EDF-ER-286, Waste Placement Plan				
Item	**Section/ Figure/ Appendix**	**Page**	**Comment**	**Resolution**
63.	Section 2.2	2-1	The possibility of placing overpacked drums in the landfill should be included.	The potential for overpacked drums will be included in this document. The typical overpack will not comply with the maximum voids criteria in the WAC. Therefore, the overpack will be grouted or the overpack will be crushed during disposal.
64.**	Section 3.1.3	3-2	The grid sizing for the 'as placed map' should be 25' x 25' x 5'.	The text for the grid spacing will be footnoted indicating the grid size is still under discussion and will be addressed in the RAWP.
65.**	Section 3.3.7	3-21	The specific compaction requirements will be clearly specified in the RAWP/O&M Plan submission for Agencies' review and comment.	Comment noted. The RAWP will clearly specify compaction requirements.

a. Items with ** indicate comments of particular concern.

ICDF 90% DRAFT FINAL DESIGN PACKAGE

DRAFT FINAL DOCUMENT REVIEW, COMMENT, RESOLUTION LIST – EPA[a]

DOCUMENT TITLE: EDF-ER-315, IDAPA Air Compliance				
Item	**Section/ Figure/ Appendix**	**Page**	**Comment**	**Resolution**
66.	Section 2.1.2	2-10	Is the point of compliance the INEEL site boundary or that location on INEEL where the general public has access?	The point of compliance for this EDF is the site boundary. For developing operational limits in the RAWP, the site boundary will be used for annual compliance and the public road for daily compliance.

a. Items with ** indicate comments of particular concern.

ICDF 90% DRAFT FINAL DESIGN PACKAGE

DRAFT FINAL DOCUMENT REVIEW, COMMENT, RESOLUTION LIST – EPA[a]

DOCUMENT TITLE: DOE/ID-10866, WAC for the ICDF Evaporation Pond				
Item	**Section/ Figure/ Appendix**	**Page**	**Comment**	**Resolution**
67.**	Section 4.1.1, 2nd para	4-1	Protection of the public, which includes non DOE radiation workers, is based on NCP short-term risk concerns in addition to NESHAPs modeling. Risks cannot exceed a cummulative carcinogenic risk of 1×10^{-4}. If the risks were limited to radiological dose, this would equate to 15 mrem/yr.	It is agreed that risks cannot exceed a cumulative carcinogenic risk of 1×10^{-4}.

a. Items with ** indicate comments of particular concern.

ICDF 90% DRAFT FINAL DESIGN PACKAGE

DRAFT FINAL DOCUMENT REVIEW, COMMENT, RESOLUTION LIST – EPA[a]

DOCUMENT TITLE: Appendix AA, Project Schedule and Assumptions				
Item	**Section/ Figure/ Appendix**	**Page**	**Comment**	**Resolution**
68.	Schedule, Item 7		Allowance for a 15 day document finalization should have been assumed.	If additional time for editing is needed, the Agencies will be notified of the request for additional time.
69.	Schedule, Item 11		Screening operations are scheduled to close prior to finalization of the RD/CWP which may lead to additional screening concerns.	Screening operations are included in the excavation and test pad scope of work so they can be completed independently of the ICDF RD/CP.
70.**	Schedule, Item 47		The Prefinal inspection checklist should be a component of the RA Work Plan submission.	The preliminary prefinal inspection checklist will be included in the RAWP.
71.**	Schedule, Item 47		Given the winter months and potential for snow, the Pre Final Inspection should be conducted in the Spring or a duration of >2weeks allowed to adjust to weather concerns.	The ICDF construction prefinal inspection will occur as scheduled unless adverse weather conditions inhibit the ability to conduct the inspection. At a minimum, the operations prefinal inspection may also include components of the construction prefinal inspection.
72.**	Schedule, Item 50		The RA Work Plan also includes the O&M Plan which is separate and distinct based on the FFA/CO.	This comment is applicable to and will be addressed in the RAWP.

a. Items with ** indicate comments of particular concern.

ICDF 90% DRAFT FINAL DESIGN PACKAGE

DRAFT FINAL DOCUMENT REVIEW, COMMENT, RESOLUTION LIST – EPA[a]

DOCUMENT TITLE: Appendix BB, Detailed Cost Estimate				
Item	**Section/ Figure/ Appendix**	**Page**	**Comment**	**Resolution**
73.**		BB-5	Given the reference for on and off-site cost comparisons, it does not appear that a contingency for payment of state transportation taxes, e.g., Utah, Iowa, etc. is included in the estimate for off-site shipments. A summary level cost estimate should be prepared for off- site shipment and disposal costs for selected waste groupings, e.g., no RCRA LDR, Debris, low level rad, etc. to allow the ROD criterion that those waste streams whose off-site unit costs are less than the on-site unit cost would be disposed of off-site.	The on-Site and off-Site cost comparisons will be updated to include State of Utah transportation taxes in the off-Site cost.

a. Items with ** indicate comments of particular concern.

ICDF 90% DRAFT FINAL DESIGN PACKAGE

DRAFT FINAL DOCUMENT REVIEW, COMMENT, RESOLUTION LIST – EPA[a]

DOCUMENT TITLE: Appendix EE, Comment Resolution on the Draft 90%				
Item	**Section/ Figure/ Appendix**	**Page**	**Comment**	**Resolution**
74.	General		Although we disagree with some of the proposed resolutions, our concerns remain with the contents of the superceeding document which we have evaluated herein.	Comment noted.

a. Items with ** indicate comments of particular concern.

ICDF 90% DRAFT FINAL DESIGN PACKAGE

DRAFT FINAL DOCUMENT REVIEW, COMMENT, RESOLUTION LIST – IDEQ

DOCUMENT TITLE: Comments on Responses to IDEQ Comments on Draft ICDF RD/RA WP Submittal

Item	Section/ Figure/ Appendix	Page	Comment	Resolution
1	Comments # 4, 13-17, and 61		These comments regarding closure of the various ICDF units covered in the RD/CWP have not been adequately addressed. The Agencies discussed the items needed for resolution of these comments on a March 7, 2002 conference call. However, the draft final document was not modified to incorporate these discussions. Specific concerns are reiterated below: a) Section 5.14 should describe the closure requirements that will be met for each of the various units covered under this RD/RA Work Plan. This includes the landfill, the evaporation pond CAMU, and the associated tank units (i.e., Truck unloading Station, Crest Pad Building Sump, and Decontamination Lift Station). For clarity, this section should be divided into sub-sections addressing each of these units. b) For the landfill, the text in paragraph 2 of Section 5.14 should be expanded to describe the performance standards that will be met for the closure and post-closure care period. As discussed, this could be done efficiently in a list or outline format. c) The text in Section 5.14 relating to the evaporation pond CAMU must be revised. As stated in the March 7, 2002 and previous discussions, the two closure options are clean closure or landfill closure. The text as written attempts to define "risk-based clean closure" as a third option. This is not a viable third option, but rather a potential end-point of a clean closure after the required closure activities have been performed. Section 5.14 includes a proposal to apply an industrial land-use scenario for "risk-based" clean closure standards. As	Section 5.14 of the RD/C WP discusses closure elements of the ICDF and will be moved to the RAWP. Agency comments regarding this section will be incorporated into the RAWP. It is the goal of the project to close all ICDF units under "clean closure", with the exception of the landfill cell. The ability to close the non-landfill ICDF units under "clean closure" will be a function of its operating history.

ICDF 90% DRAFT FINAL DESIGN PACKAGE

DRAFT FINAL DOCUMENT REVIEW, COMMENT, RESOLUTION LIST – IDEQ

DOCUMENT TITLE: Comments on Responses to IDEQ Comments on Draft ICDF RD/RA WP Submittal

Item	Section/ Figure/ Appendix	Page	Comment	Resolution
			stated on March 7, the IDEQ will not agree a priori to this high level proposal. Clean closure will require that all the wastes and liners are removed and properly disposed. Once that is done, both sampling and operational records will be used to determine if there were any releases. Attempts must be made to remove the releases. If there is any residual contamination remaining after attempts to remove the releases, at that time, the IDEQ may choose to apply an industrial land-use scenario to the residuals. d) Section 5.14 does not identify what will be done, and the performance standards that will be met for closure of the evaporation pond CAMU. If it is desired that the work plan describe a potential clean closure and a potential dirty closure approach, the requirements and performance standards for each option should be presented and described in general in this section. Note that the substantive requirements of 40 CFR Subpart G, 40 CFR 264.228, and 40 CFR 264.552(e)(4) are the applicable ARARs. e) As discussed on March 7, the RD/CWP must describe the proposed closure approach for the tank units covered by this plan (i.e., Truck unloading Station, Crest Pad Building Sump, and Decontamination Lift Station). The text should describe how these units will be closed to meet the substantive requirements of 40 CFR 264.197.	

ICDF 90% DRAFT FINAL DESIGN PACKAGE

DRAFT FINAL DOCUMENT REVIEW, COMMENT, RESOLUTION LIST – IDEQ

DOCUMENT TITLE: Comments on Responses to IDEQ Comments on Draft ICDF RD/RA WP Submittal

Item	Section/ Figure/ Appendix	Page	Comment	Resolution
2	Comment # 55		The comment requests that the plan identify, in accordance with 40 CFR 264.223 and 40 CFR 264.304, the response actions that will be performed if liquids in the PLDRS exceed the action leakage. The first sentence of the response states that *"please note that 264.223 and 264.304 are not ARARs in Table 12-3 of the ROD."* Note that the Action-Specific ARARs section of the OU 3-13 ROD (Section 12.2.3.1, Page 12-21 states that , *"an evaporation pond will be constructed and designated as a corrective action management unit (CAMU) in accordance with the substantive requirements of IDAPA 16.01.05.008 (40 CRF 264.552 and 40 CFR Subpart K and CC) for purposes of . . ."* and *"The ICDF Complex will be operated, closed, and post-closed in accordance with the substantive requirements of IDAPA 16.01.05.008 (40 CFR 264 Subparts G, F, and N)."* Therefore, 40 CFR 264.223 and 40 CFR 264.304 are applicable ARARs for this remedial action.	Subpart K is listed in the declaration of the ROD as an applicable, relevant and appropriate requirement (ARAR). DOE will meet the substantial requirements of Subpart K. Action leakage rates have been calculated (see EDF-ER-269 and EDF-ER-280) will be used to determine leaks for any units. Response action plans will be developed in the RAWP.
3	Comment #s 77 and 192		This comment regarding the aqueous waste types that are eligible for discharge to the evaporation pond CAMU was not resolved by the response. It is repeatedly stated throughout this document that any aqueous CERCLA waste from within the INEEL that meets the evaporation pond WAC can be accepted into the evaporation pond. As we have stated in previous written comments (e.g., comment #123 on the draft SSSTF RD/RA WP submitted to the USDOE on October 29, 2002), the IDEQ disagrees with this assertion. The OU 3-13 ROD did not state that the evaporation pond will be used for any aqueous waste generated from CERCLA actions on the INEEL. The ROD specified that the evaporation pond will be designed and operated to treat ICDF leachate and other aqueous waste wastes generated during operations of the ICDF complex. Other CERCLA aqueous wastes that are not generated as	A conference call was held on May 3, 2002, to further understand the issues associated with this comment and develop a resolution that all three agencies (IDEQ, DOE, and EPA) could agree upon. The agreement was to add a "Prohibition" to the ICDF evaporation pond (EP) Waste Acceptance Criteria (WAC) preventing the acceptance of waste into the EP not associated with ICDF operations (waste streams from SSSTF operations and ICDF landfill leachate) or WAG 3/ICDF Complex groundwater monitoring activities. To accomplish this prohibition, two new sections will be added to Section 5.1 specifying the waste streams that are not acceptable to the ICDF EP. Also, the remaining sections of the ICDF EP WAC will be revised accordingly. The specific changes to the ICDF EP WAC are as follows. ABSTRACT, paragraph 2, page iii, will be revised as follows:

ICDF 90% DRAFT FINAL DESIGN PACKAGE

DRAFT FINAL DOCUMENT REVIEW, COMMENT, RESOLUTION LIST – IDEQ

DOCUMENT TITLE: Comments on Responses to IDEQ Comments on Draft ICDF RD/RA WP Submittal

Item	Section/ Figure/ Appendix	Page	Comment	Resolution
			part of the operation of the ICDF complex are not eligible for discharge to the evaporation pond. This includes as-generated wastes from process waste tank systems/basins or wastes generated at a result of implementing remedial or removal actions on process waste tank systems/basins. These wastes are not eligible for discharge to the evaporation pond CAMU, regardless of whether their contaminant concentrations meet the evaporation pond WAC.	The evaporation pond is designated as a Corrective Action Management Unit in accordance with the substantive requirements of IDAPA 58.01.05.008 (40 CFR 264.552). The evaporation pond is designed to meet 40 CFR 264 Subpart K and CC for the purposes of managing INEEL CERCLA Disposal Facility landfill leachate, other aqueous wastes including well purge/development water and from operations of the INEEL CERCLA Disposal Facility Complex (Operable Unit 3-13 Record of Decision). Section 1, paragraph 4, page 1-1, will be revised as follows: ICDF evaporation pond will accept ICDF landfill leachate, aqueous waste streams from ICDF Complex operations, and aqueous waste from WAG 3 and ICDF Complex groundwater monitoring (e.g., purge, sampling, well development, and decontamination water). The ICDF evaporation pond is designated as a RCRA Corrective Action Management Unit (CAMU) in the OU 3-13 ROD. The ICDF evaporation pond is designed and constructed to accept leachate from the ICDF landfill. Section 1, bulleted item 3, page 1-2, will be revised as follows: The last sentence (sentence 5) will be removed from this paragraph. Section 1.2, paragraph 1, page 1-2, will be revised as follows:

ICDF 90% DRAFT FINAL DESIGN PACKAGE

DRAFT FINAL DOCUMENT REVIEW, COMMENT, RESOLUTION LIST – IDEQ

DOCUMENT TITLE: Comments on Responses to IDEQ Comments on Draft ICDF RD/RA WP Submittal

Item	Section/ Figure/ Appendix	Page	Comment	Resolution
				Sentence 1 will be changed to "The ICDF evaporation pond is a CAMU designated to accept ICDF landfill leachate." Sentence 3 will be deleted from this paragraph. Section 1.2, bulleted items, page 1-4, will be revised as follows: Bulleted item 2 will be changed to "Aqueous waste generated in the ICDF Complex." Bulleted item 3 will be deleted. Section 1.2.1, bulleted item 4, page 1-4, will be revised as follows: Title will be changed to "Aqueous waste from WAG 3 and ICDF Complex groundwater monitoring". The last sentence (sentence 5) will be deleted from this bulleted item. Section 2, paragraph 1, page 2-1, will be revised as follows: Sentences 2, 3, and 4 will be deleted from this paragraph. Table 2-1, page 2-1, will be revised as provided on attached sheet. This table was made to be consistent with the acceptable waste streams discussed above. Two new sections (5.1.1 and 5.1.2) will be added to the ICDF evaporation pond WAC as follows and the remaining

ICDF 90% DRAFT FINAL DESIGN PACKAGE

DRAFT FINAL DOCUMENT REVIEW, COMMENT, RESOLUTION LIST – IDEQ

DOCUMENT TITLE: Comments on Responses to IDEQ Comments on Draft ICDF RD/RA WP Submittal

Item	Section/ Figure/ Appendix	Page	Comment	Resolution
				subsections in 5.1 renumbered accordingly: **5.1.1 Non-WAG 3 or ICDF Complex Groundwater Monitoring** Aqueous wastes generated from groundwater monitoring activities other than WAG 3 or ICDF Complex groundwater monitoring activities is prohibited from disposal in the ICDF evaporation pond. **5.1.2 Non-ICDF Complex Aqueous Waste Streams** Other aqueous waste streams not associated with operation of the ICDF Complex (e.g., ICDF landfill leachate, storm water, decontamination, secondary waste from treatment, etc.) are prohibited from disposal in the ICDF evaporation pond. In the main text of the RD/CWP, revise bulleted item 1 on page 2-6 as follows: Limit disposed waste to the ICDF landfill and evaporation pond to waste that is acceptable under the ICDF landfill Waste Acceptance Criteria (DOE/ID-10865) and ICDF evaporation pond Waste Acceptance Criteria (DOE/ID-10866).
4	Comment # 89		Specification 02666 does not reflect the equipment or the methods described in this comment response. Please modify the specification to correspond to the face-to-face comment resolution on this matter, as written in this comment response.	Section 02666 of the Technical Specifications will be revised under Article "Processing Using the In-Place Mixing Method" to tailor the discussion to anticipated construction mixing methods.
5	Comment # 90		Comment Resolution List contained in the Draft Final ICDF RD/CWP, Specification 02666, page 9 of 10, does not reflect the agreed to face-to-face comment resolution on this	Section 02666 of the Technical Specifications will be revised under Article "Maintenance" to define rapid deployment of the geomembrane as "within 12 hours after lift placement" as

ICDF 90% DRAFT FINAL DESIGN PACKAGE

DRAFT FINAL DOCUMENT REVIEW, COMMENT, RESOLUTION LIST – IDEQ

DOCUMENT TITLE: Comments on Responses to IDEQ Comments on Draft ICDF RD/RA WP Submittal

Item	Section/ Figure/ Appendix	Page	Comment	Resolution
			matter or the verbiage in the response to this comment. The specification states "In the event that the geomembrane liner cannot be installed rapidly after the final soil bentonite liner lift, the final lift of soil bentonite liner shall be constructed 4 to 6 inches thicker than required and cut to final grade immediately before geomembrane deployment.". Prior to this statement, the specification discusses keeping the CCL hydrated, and that cracks greater than 1 inch deep or ¼ inch wide require repair. The test pad results clearly indicate that desiccation results in unacceptable permeability results for this soil material and compaction methods/energy. Given the fact that the efforts made to keep the test pad hydrated to prevent desiccation were not successful, It is evident that desiccation is unavoidable in the climate conditions president at the INEEL. The face-to-face agreement was based on constructing the entire CCL 4 to 6 inches thicker than final grade, maintaining hydration of this CCL surface to the maximum extent possible, and then cutting back the CCL immediately prior to geomembrane deployment. The DOE comment response concurs with this agreement. The specification must be therefore be worded accordingly.	the maximum time limit for placement of the 4 to 6 inch overbuild section, if the SBL can be kept moist.
6	Comment # 91		EDF – 2899 still contains comments relative to proprietary information, as shown on hydraulic conductivity reports performed by Vector Engineering, Inc. A more thorough inspection of this EDF is needed to ensure that all these proprietary statements are removed, as per the DOE comment response.	The document will be revised to remove discussion of proprietary information.
7	Comment # 95		This comment response states "*A maximum exposure time that the HDPE geomembrane may be exposed to UV radiation will not be added as we do not believe that this is an issue within the time frame of construction.*". This response fails to address the IDEQ concern. Please cite the manufacturer's recommendation for the maximum time	The manufacturer's recommended exposure time limit for the HDPE geomembrane for protection against degradation in excess of 30% of its original strength will be cited in the text.

ICDF 90% DRAFT FINAL DESIGN PACKAGE

DRAFT FINAL DOCUMENT REVIEW, COMMENT, RESOLUTION LIST – IDEQ

DOCUMENT TITLE: Comments on Responses to IDEQ Comments on Draft ICDF RD/RA WP Submittal

Item	Section/ Figure/ Appendix	Page	Comment	Resolution
			allowable for HDPE exposure to UV radiation prior to experiencing product degradation. It is also stated that the evaporation pond HDPE membrane is exposed for the entire design life. It should be noted that this is true only for the "sacrificial" HDPE membrane.	
8	Comment # 97		This comment states that QA testing will be more intensive in areas where the CAT 815 is used during liner construction. Please clarify where this requirement is stated in the specifications or in the QA requirements.	Text will be added to DOE/ID-10851 under Section 4.2, "Soil Bentonite Liner," that addresses the need for more frequent testing in areas of nonstandard SBL placement and compaction method. Each lift, no matter how thin, will be tested for density and moisture.
9	Comment #115		IDEQ identified in Comment #115 that the potential to emit rather than the design inventory must be used to demonstrate compliance with IDAPA 58.01.01.585 and .586. EDF-ER-315, using the design inventory concentrations, concludes that only benzo(a)pyrene must have operational controls. However, the screening presented in Appendix B of EDF-ER-315 indicates there may be as many as eighty (80) Toxic Air Pollutants for which the WAC concentrations would have to be operationally controlled to ensure compliance with the .585 and .586 standards. Therefore, the compliance demonstration does not reflect the maximum potential to emit as derived from the waste acceptance criteria. IDEQ will not concur with the RD/CWP unless the USDOE either: • Retains the current compliance model and limits the WAC concentrations to the concentrations found in the compliance demonstration for all TAP compounds except benzo(a)pyrene (for which the RAWP shall provide operational limits); or,	The title of the document will be changed to "IDAPA Preliminary Air Screening Results." The RAWP will include the IDAPA 58.01.01.585/.586 compliance document. The procedure for developing the operational limits is outlined on pages 4-1 and 4-2 of the EDF. EDF-ER-315 will be added to Table 4-1 of the WAC. The summary will state that emissions will be controlled by operational limits. The operational limits will be developed and presented in the RAWP.

ICDF 90% DRAFT FINAL DESIGN PACKAGE

DRAFT FINAL DOCUMENT REVIEW, COMMENT, RESOLUTION LIST – IDEQ

DOCUMENT TITLE: Comments on Responses to IDEQ Comments on Draft ICDF RD/RA WP Submittal

Item	Section/ Figure/ Appendix	Page	Comment	Resolution
			• Revises the compliance demonstration using the WAC concentrations and IDEQ-approved emission/dispersion models. The WAC text must stipulate that for any TAP compound for which the WAC concentration is predicted to result in an exceedance of the TAP standard, the emissions for that compound will be controlled by operational procedures. Further, the text must state that these procedures will be specified in the Remedial Action Work Plan.	
10	Comment #s 128 and 149		These comments regarding the proposed use of in-cell staging within the landfill was not resolved by the response. The IDEQ and the USEPA have both rejected the in-cell staging concept as it has been proposed in this document. The response challenges a regulatory call made by both regulatory Agencies. This response must be modified. Further, Section 3.3.6 of Appendix T still proposes the use of in-cell staging. This concept is not approved and must be deleted from this document.	The sentence in Section 3.3.6 of Appendix T has been deleted. No change will be made to the responses in the Draft Final, as these responses have precedence over previous responses.
11	Comment # 138		This comment states that the density testing description which includes the one per day of compaction minimum statement will be removed. It is evident upon inspection that this has not been fully incorporated into this document. Please revise the document accordingly.	The text of DOE/ID 10851 will be modified to remove the one per day of compaction minimum requirement under Tables II-1 and II-4 of the Plan.
12	Comment # 153		This comment states that bird control for the evaporation ponds will be addressed. Please indicate where in this document this control is described.	This comment will be addressed in the RAWP.
13	Comment # 176		a) The referenced text states, "*Wastes from within the AOC may trigger placement by being treated (e.g., neutralization, solidification using reagents) or being placed in a permitted RCRA facility prior to disposal to the ICDF landfill.*" The second half of this sentence requires clarification. The IDEQ has repeatedly stated	a) The document will be revised. b) This will be addressed in the RAWP, including the definition of "containerized".

ICDF 90% DRAFT FINAL DESIGN PACKAGE

DRAFT FINAL DOCUMENT REVIEW, COMMENT, RESOLUTION LIST – IDEQ

DOCUMENT TITLE: Comments on Responses to IDEQ Comments on Draft ICDF RD/RA WP Submittal

Item	Section/ Figure/ Appendix	Page	Comment	Resolution
			that placement is triggered when wastes are managed in such a manner as to constitute a RCRA storage unit as defined in 40 CFR 260.10, even if the storage unit is located within the AOC. Placement is triggered by RCRA compliant storage, not by whether or not a unit is permitted. Therefore, the text must be modified. b) Additionally, we have reviewed the proposal regarding remediation waste staging piles presented in the response to this comment and have the following comments/clarifications: <u>Design Standards, Fourth Bullet</u>: Since this unit will operate for a long timeframe prior to closure (including over many winters), the unit should not be located on bare soils. <u>Design Standard, Sixth Bullet:</u> Any wastes in staging piles over the winter shutdown must be containerized to minimize releases. The IDEQ has determined this is a necessary requirement for protectiveness, since the unit will operate for a long timeframe prior to closure. <u>Operational Conditions, Fourth Bullet</u>: The IDEQ has determined that the two year time limitation applies to the waste and to the cleanup site using the staging pile. That is, no particular waste can remain in the 40 CFR 554 unit for longer than two years. In addition, the staging pile must not receive wastes from any given cleanup site for more than a two year duration. <u>Operational Conditions, Eighth Bullet</u>: Note that the IDEQ will consider requests for extension to the above-	

ICDF 90% DRAFT FINAL DESIGN PACKAGE

DRAFT FINAL DOCUMENT REVIEW, COMMENT, RESOLUTION LIST – IDEQ

DOCUMENT TITLE: Comments on Responses to IDEQ Comments on Draft ICDF RD/RA WP Submittal

Item	Section/ Figure/ Appendix	Page	Comment	Resolution
			described two year timeframes in accordance with 40 CFR 264.554 (h) (i), which specifies the potential for a single, 180 day extension.	
14	Comment # 177		The proposal to operate the ICDF to keep the impact to the off-site maximally exposed individual (MEI) at less than 10 mrem/year and targeted to be less than 1 mrem/year is a significant deviation from EDF-ER-290, NESHAP Modeling for the ICDF Complex. EDF-ER-290 must be revised to address the radionuclide emissions sources responsible for the 20-fold (or larger) increase in dose to the off-site MEI. Further, any other document that used the same input assumptions as EDF-ER-290 must also be revised to reflect the impacts of the increased emissions. Most significantly, this will impact the Screening Level Ecological Risk Assessment (SLERA) and Human Health Assessment assumptions. The SLERA will need to be revisited incorporating the increased radionuclide emissions associated with this twenty-fold increase dose to the off-site MEI. DOE must show that operating the ICDF with radionuclide emissions based on the NESHAP off-site dose limit will be protective of the environment.	The NESHAPs, SLERA, and Risk Assessment documents were all prepared using the ICDF Design Inventory (EDF-ER-264). Although each of these documents use different assumptions and methods of analysis, DOE will ensure that each of these aspects are addressed in the ICDF RAWP so that ICDF operations are protective of human health and the environment.
15	Comment #s 178 and 179		These comments are not resolved by the responses and document changes. Compliance with the groundwater RAO's and liner compatibility are not the only factors that must be considered. The waste tracking section must address compliance with the RAOs and applicable ARARs (e.g., NESHAPs, TAPs).	See response to IDEQ Comment #9. The RAWP will include the IDAPA 58.01.01.585/.586 compliance document.
16	Comment # 181		Wastes should be checked at the ICDF for the presence of free liquids prior to disposal. This is especially important for wastes such as drill cuttings, as has been demonstrated recently with the Group 4 wastes in storage at the SSA.	The procedure for verification of free liquids will be addressed in the RAWP. DOE recognizes and will comply with the prohibition of free liquids in the landfill.

ICDF 90% DRAFT FINAL DESIGN PACKAGE

DRAFT FINAL DOCUMENT REVIEW, COMMENT, RESOLUTION LIST – IDEQ

DOCUMENT TITLE: Comments on Responses to IDEQ Comments on Draft ICDF RD/RA WP Submittal

Item	Section/ Figure/ Appendix	Page	Comment	Resolution
17	Comment # 191		a) The air emission standards for surface impoundments (IDAPA 58.01.05.008 [40 CFR 264 Subpart CC]) are identified as an ARAR. Compliance mechanism is the organic limits in the Evaporation Pond WAC not a CERCLA exemption. b) The volatile organic concentration limit of 500 ppm in the Landfill WAC does not assure the leachate will contain less than 500 ppm VOC. Repeating the EDF-ER-274 calculations using the WAC limits, rather than the design inventory, appears to result in a maximum VOC concentration in excess of the Subpart CC standard. Disposal of waste with VOC concentrations an order of magnitude above the design inventory should trigger more frequent monitoring of the VOC concentration in the leachate to assure 40 CFR 264 Subpart CC compliance.	a) This will be corrected in the table. b) The comment is correct. Five chemicals will exceed maximum leachate concentrations based on the landfill WAC. These five chemicals are benzene, acetone, trichloroethene, xylene, and di-chlorobenzene. The landfill WAC limits for these five chemicals will be reduced to ensure the leachate concentrations will not exceed the EP WAC limits.
18	Comment # 193		The IDEQ provided the requested clarification during the February 2002 meeting in Idaho Falls. The reference is 58 *FR* 8666.	Comment noted.
19	Comment # 197		See Draft Final Comment #13.	See response to Draft Final Comment #13.
20	Comment # 206		This comment response states that "It was recommended and agreed that a redundant strip of HDPE be placed on the slope underneath the influent pipe discharge." for the evaporation ponds. Please indicate where in the specification or construction work plan that this requirement is stated.	A note will be added to Drawing P-203 indicating the following: "An HDPE splash pad will be placed on the slope underneath the influent pipe discharge to the evaporation ponds."

ICDF 90% DRAFT FINAL DESIGN PACKAGE

DRAFT FINAL DOCUMENT REVIEW, COMMENT, RESOLUTION LIST – IDEQ

DOCUMENT TITLE: Draft Final ICDF RD/CWP

Item	Section/ Figure/ Appendix	Page	Comment	Resolution
21	General		Please describe what measures are in place, and what requirements are documented, in the specifications or work plan to ensure freeze–thaw protection is provided for the landfill and the evaporation ponds during construction. This is particularly important if construction of the liners is delayed for any reason. It should be emphasized that available literature on this topic predicts an approximate 2 order of magnitude increase in permeability for a CCL that has undergone very few freeze-thaw cycles.	A 3-ft operations layer will be placed over all liner sections (geosynthetic and SBL layers) constructed prior to winter shutdown. If construction is expected to occur during periods of potential soil freezing, e.g., past November 1, a decision will be made by October 1 to deal with the situation.
22	Section 1.4, Work Plan Organization	1-11	The descriptions of Appendix N and O are not correct. Appendix N looks at Toxic Air Pollutants while Appendix O examines radionuclide emissions. TAP exposures are not expressed in mrem/yr. Correct/clarify the purpose of these appendices.	The text of Appendix N will be revised to remove in mrem/yr. Title of Appendix N will be revised as discussed in Comment 9. Units will be changed to $\mu g/m^3$. Change text in Appendix O, page 1-11, second bullet, to add "radioactive prior to air emissions".

ICDF 90% DRAFT FINAL DESIGN PACKAGE

DRAFT FINAL DOCUMENT REVIEW, COMMENT, RESOLUTION LIST – IDEQ

DOCUMENT TITLE: Draft Final ICDF RD/CWP, EDF-ER-274				
Item	**Section/ Figure/ Appendix**	**Page**	**Comment**	**Resolution**
23	Section 5, 1st para, last sentence	5-1	The referenced text states, "*The leachate generated during the post closure period will be managed appropriately and in accordance with the operational requirements.*" This statement is very vague, and needs some clarification. The discussion should convey that as long as the landfill is generating leachate, it will be collected and managed in a manner that is protective of human health and the environment, and in accordance with all ARARs.	The text will be revised to read "As long as the landfill is generating leachate, it will be managed in a manner that is protective of human health and the environment, and in accordance with all ARARs."

ICDF 90% DRAFT FINAL DESIGN PACKAGE

DRAFT FINAL DOCUMENT REVIEW, COMMENT, RESOLUTION LIST – IDEQ

DOCUMENT TITLE: Draft Final ICDF RD/CWP, EDF-ER-275				
Item	**Section/ Figure/ Appendix**	**Page**	**Comment**	**Resolution**
24	Section 2.1.2, Table 2-1	2-3	The table is missing values for the recharge rates used in the simulations. Please correct.	The text of the EDF will be revised to add the recharge rate used in the simulations.
25	Appendix B, Section B3.4.3, Items 2 & 3	2-3	Both items state that Figures B-3 and B–4 show lines representing 15 pCi/L and 4 mrem/year but neither figure shows these lines because of the scale. Please revise the text to reflect this fact.	The text of the EDF will be revised to indicate that the 15 pCi/L and the 4 mrem/yr lines are not shown due to the scale on the figures.

ICDF 90% DRAFT FINAL DESIGN PACKAGE

DRAFT FINAL DOCUMENT REVIEW, COMMENT, RESOLUTION LIST – IDEQ

DOCUMENT TITLE: Draft Final RD/CWP, Appendix C, EDF-ER-278				
Item	**Section/ Figure/ Appendix**	**Page**	**Comment**	**Resolution**
26	Section 1.4, 2nd para	1-3	The expected leachate concentrations are based on the Facility Design Inventory, which is a limited collection of data. However, there is no discussion of the uncertainty associated with modeling to simulate leachate generation based on the design inventory versus actual leachate generated from wastes received. There should be an acknowledgement that the actual leachate concentrations may be significantly greater than the expected leachate concentrations based on actual waste loading.	As part of the 5-year review process, actual data will be compared with the model predictions. This will be outlined in the RAWP section dealing with 5-year reviews. Also see response to Comment #17.

ICDF 90% DRAFT FINAL DESIGN PACKAGE

DRAFT FINAL DOCUMENT REVIEW, COMMENT, RESOLUTION LIST – IDEQ

DOCUMENT TITLE: Draft Final RD/CWP, EDF-ER-281, Appendix J				
Item	**Section/ Figure/ Appendix**	**Page**	**Comment**	**Resolution**
27	Section 3.1.3.2, Figure 3-3	3-5	This figure shows the projected extent of a 500 year flood plain by the U.S. Bureau of Reclamation for the INEEL. It is interesting to note the significant differences between this projection and the two current 100 year flood plain maps prepared by the U.S. Geological Survey and the U.S. DOE. The 100 year flood plain projections show significant portions of INTEC falling within the 100 year flood plain and the U.S. Geological Survey shows the limit of the 100 year flood plain lying near the northern edge of the ICDF. It is not clear how there can be this much disparity between the 100 year and 500 year flood plain projections. An explanation should be provided to address this disparity.	The text of the EDF will be revised to provide the different flood levels predicted by the different studies, and indicate that these levels do not impinge on the facility. Further, the text will be clarified to indicate that a conservative flood elevation approximately 8 feet higher than the highest of these predictions was used to assess cover performance. The historical basis of flood elevation determinations will be cited in the text.

ICDF 90% DRAFT FINAL DESIGN PACKAGE

DRAFT FINAL DOCUMENT REVIEW, COMMENT, RESOLUTION LIST – IDEQ

DOCUMENT TITLE: Draft Final RD/CWP, EDF-ER-281, Appendix J

Item	Section/ Figure/ Appendix	Page	Comment	Resolution
28	Section 3.2.2, 2nd para, 4th sentence		A significant release in the tertiary monitoring system shall not be required to determine a statistically significant detection in the ground water monitoring wells at ICDF.	This issue will be addressed in the RAWP during development of the detection monitoring evaluation criteria.
29	Section 3.7.3	3-11	Sandberry bluegrass in the third bullet appears to be misspelled. It is assumed the correct name is Sandberg's bluegrass. Please correct.	The text will be revised to correct the name.
30	Section 5.2, 4th para	5-1	The paragraph states "The ICDF Complex is situated outside the Big Lost River floodplain." The statement should be qualified to clarify what criterion is inclusive in this statement because the gradation of the sediments present beneath the ICDF indicate the past occurrence of high energy stream flows in this location suggestive of flood type depositional environments.	The historical basis of flood elevation determinations will be cited in the text. The 100-year flood plain will be referenced.

ICDF 90% DRAFT FINAL DESIGN PACKAGE

DRAFT FINAL DOCUMENT REVIEW, COMMENT, RESOLUTION LIST – IDEQ

DOCUMENT TITLE: Draft Final RD/CWP, Appendix K, EDF-ER-280				
Item	**Section/ Figure/ Appendix**	**Page**	**Comment**	**Resolution**
31	Section 3.2.1.1, last para	3-3	There appears to be a typographical error in the second sentence. The sentence should read: "The head on the liner is defined as one foot per 40 CFR 264.222."	The text will be corrected as noted.

ICDF 90% DRAFT FINAL DESIGN PACKAGE

DRAFT FINAL DOCUMENT REVIEW, COMMENT, RESOLUTION LIST – IDEQ

DOCUMENT TITLE: Draft Final RD/CWP, EDF-ER-279, Appendix M				
Item	**Section/ Figure/ Appendix**	**Page**	**Comment**	**Resolution**
32	Section 4.2, 1st para	4-3	The paragraph states "A higher flux at the downslope region and a lower flux at the downslope region could occur due to lateral movement of moisture along the interface between the water storage layer and underlying gravel layers." This sentence requires editing as it is not feasible to have a "higher" and "lower flux" at the same location at the same time. Please modify this sentence.	The text of the EDF will be revised to correct this statement to read "A higher flux at the downslope region and a lower flux at the upslope region could occur…"
33	Sub-Appendix E, Section E.1	E-4	The text refers to Figure 2-5 but it is not clear what Figure 2-5 is intended because said figure cannot be located in this EDF. Please provide the correct figure number or cite the correct EDF for Figure 2-5.	The text will be corrected to reflect Figure E-1 as the cited figure.
34	Sub-Appendix E, Section E.2, 4th para	E-4 &E-5	a) The paragraph refers to Table E-2 but this table is not provided. Please correct the reference or provide the correct table. b) The paragraph states that "four times average precipitation scenario resulted in breakthrough of the water storage layer….." but this statement is not consistent with Table E-1 that notes "Negative values indicate upward flow." The statement is consistent with Figure E-2. Please correct as needed. c) It is not clear what the fourth sentence is trying to state. Please clarify the intent of the sentence. Also, if the intent is to describe a mass balance error at this node or nodes, please so state and indicate the magnitude of the error. d) Note #3 on Table E-1 states "Shaded cells indicated the year of quasi-steady state conditions." The table does not include any shaded cells. Either delete the note or add the shaded cells to the table.	a.) The text will be corrected to Table E-1. b.) The table will be fixed and coordinated with the footnote. c.) The intent of the sentence will be clarified in the text. The intent is to indicate a large mass balance error at this node for this condition. The magnitude of the error is not needed as this breakthrough value is not used in computations and is shown as an approximate line on Figure E-2. d.) The shading will be clarified on the table.

ICDF 90% DRAFT FINAL DESIGN PACKAGE

DRAFT FINAL DOCUMENT REVIEW, COMMENT, RESOLUTION LIST – IDEQ

DOCUMENT TITLE: Draft Final RD/CWP, EDF-ER-279, Appendix M

Item	Section/ Figure/ Appendix	Page	Comment	Resolution
35	Sub-Appendix E, Section E.4, Assumption #5	E-26	Assumption #5 states "The cover must be saturated for breakthrough to occur." The statement could be misinterpreted to indicate the entire cover has to become saturated for breakthrough to occur which is not the case. The assumption is that a saturated condition must develop at the capillary break and that the saturated condition would not cause breakthrough until the length is approximated by the distance calculated using the equation noted. Please state the assumption more clearly.	The text of the EDF will be clarified to reflect that saturation of the water storage layer above the capillary break must occur for breakthrough to occur, and that the saturated condition would not cause breakthrough until the length is approximated by the distance calculated in the equation.

ICDF 90% DRAFT FINAL DESIGN PACKAGE

DRAFT FINAL DOCUMENT REVIEW, COMMENT, RESOLUTION LIST – IDEQ

DOCUMENT TITLE: Draft Final RD/CWP, Appendix P, DOEID-10865				
Item	**Section/ Figure/ Appendix**	**Page**	**Comment**	**Resolution**
36	Section 1.1	1-4	Another purpose of the WAC, as depicted in Figure 4-1, is to determine and address all ARAR-based criteria, and constituent-based regulatory limits. The Idaho Toxic Air Pollutant regulations, which were identified as ARARs for this remedy, establish constituent-specific regulatory limits for operations based offsite impacts. As stated in Comment #9, the compliance demonstration for the TAP was conducted on the design inventory, which are several orders of magnitude below the Table 5-2 WAC limits. Sub-Appendix B of Appendix N shows that there are as many as 80 compounds for which the WAC concentrations would have to be operationally controlled to ensure compliance with the .585 and .586 standards. To address the TAP constituent-specific regulatory limits, the WAC text must stipulate that for any TAP compound for which the WAC concentration is predicted to result in an exceedance of the TAP standard, the emissions for that compound will be controlled by operational procedures. Further, the text must state that these procedures will be specified in the Remedial Action Work Plan.	The text of Section 3.3.6 of EDF-ER-286 will be revised to eliminate the staging of soft debris in the cell prior to disposal. The procedure for developing the operational limits is outlined on pages 4-1 and 4-2 of the EDF. A reference to EDF-ER-315 will be added to Table 4-1 of the WAC. The summary will state that emissions will be controlled by operational limits. The operational limits for those controls will be in the ICDF RAWP. The title of the document will be changed to "IDAPA Preliminary Air Screening Results." The RAWP will include the IDAPA 58.01.01.585/.586 compliance document.
37	Section 4.1.3, 3rd para	4-2	The last sentence of this paragraph is very vague: *"To the extent possible, incompatible wastes will not be placed close to each other in the landfill."* Please note that the RA Work Plan must include specific operational procedures that will ensure that incompatible wastes are not landfilled to demonstrate compliance with 40 CFR 264.313.	This will be addressed in the RAWP.
38	Section 5.1.10, Organic Waste >500 ppm	5-2	IDEQ believes this section should be labeled volatile organic wastes. Limiting the volatile organic constituents to less than 500 ppm would be consistent with Table 5-1 on page 5-3.	The document will be revised per the comment.

ICDF 90% DRAFT FINAL DESIGN PACKAGE

DRAFT FINAL DOCUMENT REVIEW, COMMENT, RESOLUTION LIST – IDEQ

DOCUMENT TITLE: Draft Final RD/CWP, Appendix P, DOEID-10865				
Item	**Section/ Figure/ Appendix**	**Page**	**Comment**	**Resolution**
39	Table 5-1	5-3	The reference is incorrect. The correct reference for wastes containing >500 ppm volatile organics should read 40 CFR §264.1082(c)(1).	The document will be revised.

ICDF 90% DRAFT FINAL DESIGN PACKAGE

DRAFT FINAL DOCUMENT REVIEW, COMMENT, RESOLUTION LIST – IDEQ

DOCUMENT TITLE: Draft Final RD/CWP, Appendix Q, DOE/ID-10866				
Item	**Section/ Figure/ Appendix**	**Page**	**Comment**	**Resolution**
40	Section 4.1.2, 3rd para	4-1	The text references a Table 4-2 yet only Table 4-1 is provided. Please provide Table 4-2.	The reference to Table 4-2 will be changed to 4-1.
41	Section 4.3, 2nd para, Item No. 1	4-6	The second sentence of item # 1 states: *"Routine sampling frequencies and parameters will be developed for the facility as part of the ICDF Complex."* Identify in the text specifically where and when this will be presented to the regulatory Agencies.	The ICDF RAWP will have a section discussing environmental compliance, including sampling parameters and frequencies. "RAWP" will be added to the end of the second sentence.

ICDF 90% DRAFT FINAL DESIGN PACKAGE

DRAFT FINAL DOCUMENT REVIEW, COMMENT, RESOLUTION LIST – IDEQ

DOCUMENT TITLE: Draft Final RD/CWP, Screening Level Ecological Risk Assessment, (Draft Final Title II), Appendix R, EDF-ER-311				
Item	**Section/ Figure/ Appendix**	**Page**	**Comment**	**Resolution**
42	General		The incorporated exposure parameter modifications have eliminated some of the over-conservatism in the original SLERA, so the assessment should more accurately reflect likely exposures to ecological receptors at this facility. One of the critical assumptions is that human activity will discourage use of the area by ecological receptors. It will be necessary to monitor the site carefully during operations to ensure that this assumption is valid. It will also be important to perform this monitoring during non-operational periods. The SLERA results indicate that ecological risk during the operational period should be acceptable. Long-term risk, during and following the institutional control period, will also have to be assessed, based on a set of appropriate assumptions.	Comment noted. The issue of monitoring ecological receptors will be addressed in the RAWP. There should be no long-term risk to ecological receptors from ICDF since post operation; a cap (including a bio-barrier) will be placed on the landfill (which eliminates the pathway to the contaminants). Closure of the ICDF evaporation pond will be completed following the operational period of the pond. The closure goal for the evaporation pond is clean closure.
43	Section 1.1.2.4, "Fauna"	21	There is some redundancy in this and the following section. Section 1.1.2.4 begins with a discussion of T/E species, and references Table 5, but then discusses functional group methodology, species likely to be present in the assessment area, and the food web model. Section 1.1.2.5 then discusses T/E species again, and references Table 5 again. The document would be clearer if the T/E discussion were dropped from Section 1.1.2.4.	Comment accepted. The first two sentences of Section 1.1.2.4 will be deleted and replaced with the following "For the initial assessment species were grouped using a functional grouping approach as discussed in detail in VanHorn Hampton and Morris (1995)." This statement, which occurs later in this section, will be deleted.

ICDF 90% DRAFT FINAL DESIGN PACKAGE

DRAFT FINAL DOCUMENT REVIEW, COMMENT, RESOLUTION LIST – IDEQ

DOCUMENT TITLE: Draft Final RD/CWP, Screening Level Ecological Risk Assessment, (Draft Final Title II), Appendix R, EDF-ER-311

Item	Section/ Figure/ Appendix	Page	Comment	Resolution
44	Section 4, "Hazard Quotient Analysis"	68	The rationale for not evaluating plant receptors is based on the assumption that the area will be kept vegetation-free. Will this condition be maintained in the post-operational, institutional control period? The implications of plant growth following the operational period should be discussed.	Comment accepted. A statement to the similar to the following will be added in this section: Plants were not assessed within this ERA because all vegetation will be removed from the site and growth during the operational period will be hindered. Specifically, during operation of the landfill, the area where deposition of contaminated soil is occurring will be kept clear of vegetation. Erosion control will be maintained using plants; however, the areas vegetated will be on the sides of the landfill and should not have contact with contaminated soil. Post-operationally, the ICDF landfill will be capped with a robust state-of-the-practice cover with a middle section designed to eliminate biointrusion (burrowing animals) and a capillary break to eliminate root intrusion (EDR-ER-279 (60%)).
45	Section 7, 2nd para	76	It is stated that plants will be discouraged from growing in the ICDF area except for erosion control. Please discuss the use of plants for erosion control, including any potential impacts on ecological receptors associated with these plants.	Comment accepted. The following sentence will be added after the statement about the use of plants for erosion control: "Erosion control will be maintained using plants; however, the areas vegetated will be on the sides of the landfill and should not have contact with contaminated soil."
46	Section 7, paragraphs 2 through 4, and Table 19	77	The findings of Cieminski (1993) should be useful in the maintenance of conditions that will discourage use of the pond by wildlife. Also, while maintenance of bare shoreline will discourage pond use by a number species, monitoring efforts will need to ensure that this condition does not prove to be attractive to sandpipers and other shorebirds, or to Brewer's blackbirds.	Comment noted. Monitoring ecological receptors will be addressed in the RAWP.

ICDF 90% DRAFT FINAL DESIGN PACKAGE

DRAFT FINAL DOCUMENT REVIEW, COMMENT, RESOLUTION LIST – IDEQ

DOCUMENT TITLE: Draft Final RD/CWP, DOE/ID-10955, Appendix S				
Item	**Section/ Figure/ Appendix**	**Page**	**Comment**	**Resolution**
47	General		It is repeatedly referenced throughout this appendix, that standard statistical techniques may not be appropriate for the perched water, that increases in concentration may result from water levels dropping, and that a plan for evaluating the detection monitoring data will be part of the RAWP. At this time, it is purely speculation what will be observed in the perched monitoring wells. Therefore, it will not be possible to pre-ordain in the RAWP how the data will be evaluated to determine whether a potential positive detection results from a source other than the ICDF complex. Sampling data must first be collected and reviewed before the Agencies establish detection monitoring criteria.	For the perched groundwater, the RAWP will describe the general approach for evaluation of the detection monitoring criteria. The final approach will be determined following evaluation of the baseline data. Upon receipt of QA/QC data, a submission to the Agencies will be provided that describes the approach for detection monitoring data evaluation. This specific approach for the perched groundwater will be a modification to the RAWP when sufficient data are available. The SRPA detection monitoring approach shall be provided in the RAWP. The criteria will be developed prior to placing waste in the landfill.
48	Section 1.2.3, 1st para, 1st sentence		a) This section applies to both the SRPA wells and the perched water wells. Please modify the text. b) Notification should occur within seven days.	a) The text was revised to "If evidence of increased contamination in the perched groundwater or SRPA is determined based upon evaluation of the detection monitoring data,…" b) DOE will provide both validated and unvalidated data in accordance with section 19 of the FFA/CO.
	Section 1.2.3, 2nd bullet		Delete "baseline" from this sentence. The requirements to initially re-sample per 40 CFR 264.98 (g) (3) do not hinge on this condition. Additionally, the process to demonstrate that the exceedance results from a source other than the ICDF will require Agency concurrence on a separate demonstration which makes that case.	For the SRPA, the term baseline will be defined to indicate the upgradient well(s) and the downgradient wells prior to landfill operation. For this project, where the preexisting water quality is contaminated, the baseline concentrations will be considered background for the purposes of the substantive RCRA requirements. We will add a discussion that baseline concentrations will be established as "background", which is different from uncontaminated concentrations upgradient of INEEL facilities. Then the term background can be used as requested. The DOE will make the demonstration that evidence of contamination is from ICDF or a source other than ICDF in accordance with 40 CFR 264.98 (g)(6) and submit this to the Agencies.

ICDF 90% DRAFT FINAL DESIGN PACKAGE

DRAFT FINAL DOCUMENT REVIEW, COMMENT, RESOLUTION LIST – IDEQ

DOCUMENT TITLE: Draft Final RD/CWP, DOE/ID-10955, Appendix S

Item	Section/ Figure/ Appendix	Page	Comment	Resolution
50	Section 1.2.3, bullet 2	1-6	The partial sentence at the top of the page should read "then CFR 264.99 requirements are triggered." Please correct this citation.	Agree. Text will be modified as suggested.
51	Section 1.2.3, 2nd para	1-6	The references to 40 CFR § 264.98(4) are incorrect. There is a 40 CFR § 264.98(a)(4) and a 40 CFR § 264.98(g)(4). The reference to 40 CFR § 264.98(5) is also incorrect, it should read …264.98(g)(5).	Agree. References will be corrected to 264.98(g)(4) and (g)(5).
52	Section 1.2.3, 2nd para	1-6	Supporting historical data in the proximity of the ICDF for increased constituent concentrations due to water level declines should be submitted to the Agencies as soon as possible to verify these concentration increases.	See response to Comment #47 from IDEQ.
53	Section 2.2.3, 1st para, 2nd sentence and 3rd para, 5th sentence	2-15	IDEQ stated in the February 7, 2002 comments on the draft ICDF RD/RA work plan (Comment # 211), the first referenced paragraph quotes selected excerpts from the TEGD. However, although not quoted in the RD/RA WP, the TEGD (Section 1.4, Page 35) also states that *"Quality or use of groundwater are not factors in the definition. Even through a saturated zone may not be presently in use, or may contain water not suitable for human consumption, it may deserve protection because contaminating it may threaten human health or the environment."* Because this is a perched zone over the SRPA, a sole source aquifer, the upper perched zone meets the definition of the uppermost aquifer. Modify the referenced sentence in the third paragraph.	The sentence will be modified. DOE does not agree that the perched water meets the definition of an aquifer but agrees with monitoring perched water to be compliant with RCRA detection monitoring. Fifth sentence, third paragraph, remove "Although" and "is not an aquifer, it"
54	Section 2.2.3, paragraphs 1-3	2-15	These paragraphs attempt to make the case that only the regional aquifer is of concern and the only ground water that needs to be monitored is in the regional aquifer. Perched aquifers do occur at the site when surface water sources supply enough water and the hydrostratigraphy is conducive to develop perching. Monitoring these perched aquifers is needed to be protective of the ground water resources of the state per Idaho rule (see definition of ground water, IDAPA 58.01.11.008), to comply with the substantive requirements	DOE does not agree that the perched water is an aquifer but agrees with monitoring perched water to be protective, and provide early warning as part of the RCRA detection monitoring network. No change to text.

ICDF 90% DRAFT FINAL DESIGN PACKAGE

DRAFT FINAL DOCUMENT REVIEW, COMMENT, RESOLUTION LIST – IDEQ

DOCUMENT TITLE: Draft Final RD/CWP, DOE/ID-10955, Appendix S

Item	Section/ Figure/ Appendix	Page	Comment	Resolution
			of 40 CFR 264.97, and to provide an early warning of potential contamination that can impact the regional aquifer underlying the perched aquifers(s) before that regional aquifer is impacted.	
55	Section 2.2.4, 1st para	2-16	IDEQ does not agree with the statement that a fundamental aspect of this monitoring strategy will be to analyze leachate samples from ICDF. A statistically significant "detection criteria" will be established using background data. If this criteria is exceeded it shall be considered a "hit" unless the operator can prove the detection was not caused by one of the regulated units in accordance with 40 CFR § 264.98(g)(6). The detection criteria will not be established until data are available and have been reviewed from the new ICDF monitoring wells.	The word "fundamental" has been deleted. The last sentence does not belong in this paragraph and will be deleted.
56	Section 2.2.5, 2nd para, 2nd & 3rd sentence		The IDEQ does not agree that sharp increases in concentration are expected in the new ICDF complex perched water monitoring wells. References to WAG 2 wells do not necessarily apply to ICDF wells, and a similarity between the perched water systems at WAG's 2 and 3 cannot be established without data.	Perched water wells at TRA and INTEC are completed in similar geologic environments with similar contaminants. Knowledge learned from declining perched water levels due to shutting off some surface water pathways and increasing concentrations at WAG-2 is useful in determining possible similar outcomes at WAG-3. For clarity, the text will be changed from "are expected" to "may occur". The 3rd sentence will be modified to end after the word "groundwater".
57	Section 3.2.2, 2nd para	3-2	The next to last sentence in this paragraph incorrectly ties a detection in the tertiary monitoring system to confirmation sampling in "any downgradient groundwater monitoring well…." Confirmation sampling should occur regardless of whether or not detections are found in the tertiary monitoring system. The tertiary monitoring system only underlies a portion of the landfill cells so only leakage from the cells along the sump would be detected. A catastrophic	We agree that confirmation sampling should occur regardless of whether or not detections are found in the tertiary system. Confirmatory sampling can include more than just the well that had a hit. The text will be modified.

ICDF 90% DRAFT FINAL DESIGN PACKAGE

DRAFT FINAL DOCUMENT REVIEW, COMMENT, RESOLUTION LIST – IDEQ

DOCUMENT TITLE: Draft Final RD/CWP, DOE/ID-10955, Appendix S

Item	Section/ Figure/ Appendix	Page	Comment	Resolution
			failure of the cells' liners outside the bounds of the tertiary system will not be captured in the tertiary leachate, nor would a release from the evaporation ponds be detected in the ICDF landfill's tertiary monitoring system. Perched aquifer wells may not provide adequate water for resampling and a contingency approach should be developed to accommodate this problem.	
58	Section 3.3, Item 6	3-3	Item 6 should be broadened to encompass both declining perched aquifer water levels as well as rising water levels. Both conditions could affect the water quality data.	Comment accepted. Text modified.
59	Section 3.4, 2nd para	3-4	Replacement perched aquifer wells, or Snake River Plain Aquifer wells, would be considered should the well fail because of a collapsed screen or casing, dropped and non-recoverable equipment in the well, or other similar occurrences.	The following text will be added: "If the well's integrity is compromised prior to going dry, the well will be fixed or replaced."
60	Section 3.6, 3rd para	3-5	It is recommended that this paragraph and the two bullet items be deleted. This topic is better addressed in the ICDF Complex RAWP where it can be more fully developed.	This text will be deleted.
61	Section 3.7, 2nd para	3-5	A caliper log also should be considered as a minimum requirement along with the stated neutron and gamma gamma logs. Please add the caliper log to this statement.	USGS typically runs caliper logs. Text will be modified to indicate that geophysical logs will be used to determine optimum well completion. If hole stability is an issue, it may not be possible to conduct a full suite of geophysical logs.
62	Section 3.7, Figure 3-2	3-7	The conceptual design for the Snake River Plain aquifer wells only allows for a one nominal diameter difference between intermediate carbon steel casings. A more typical industry approach is to allow two nominal diameter differences to facilitate annular sealing when the wells or casings are not straight. Please consider allowing for two nominal diameter differences; it is recognized that a greater cost may be incurred because of the larger hole diameters that are needed.	Two nominal casing sizes will be used for all permanent casing. This design allows more than adequate annular space for a 1" or 1¼" tremie pipe.
63	Section 3.7, 2nd para	3-8	A caliper log also should be considered as a minimum requirement along with the stated neutron and gamma	USGS typically runs caliper logs. Text will be modified to indicate that geophysical logs will be used to determine

ICDF 90% DRAFT FINAL DESIGN PACKAGE

DRAFT FINAL DOCUMENT REVIEW, COMMENT, RESOLUTION LIST – IDEQ

DOCUMENT TITLE: Draft Final RD/CWP, DOE/ID-10955, Appendix S

Item	Section/ Figure/ Appendix	Page	Comment	Resolution
			gamma logs. Please add the caliper log to this statement.	optimum well completion. If hole stability is an issue, it may not be possible to conduct a full suite of geophysical logs.
64	Section 3.7, Figure 3-3	3-9	Consideration should be given to using stainless steel screen and riser for the deepest perched aquifer installation. The greater material strength may be worth the cost because of the greater stresses that may be imposed on the deep well installation.	Schedule 80 PVC is adequate for the 400 ft depth.
65	Section 3.7, Figures 3-4 & -5	3-11, 3-12	It is not clear on these figures what constitutes the "tertiary leak detection system". Please provide clearer figures with labels identifying the "tertiary leak detection system" and its components.	The tertiary system will be labeled on the figure.
66	Section 4.1.1, Table 4-2 with Figure 3-1	4-1 & -2 to Page 3-6	**a)** The rationale for well PW-15 requires modification. Although the adjacent well PW-6 is the shallow component well for this pair, it is not the sole depth interval that could be influenced by the Big Lost River when it flows. In fact, it is more likely that the deeper completions will see an influence from the Big Lost River than will the shallow completion. Please add this rationale to the medium and deep completions for well PW-15. **b)** The rationale for the deep completion for well PW-18 is the same as for the medium depth. Please add the rationale. **c)** The rationale for well PW-19 to the west of cells 1 and 2 is the same for all three depths. Monitor for possible intermittent flows of the Big Lost River and determine if percolation pond influence extends west of the ICDF. Please modify the rationales. **d)** The rationale for well PW-20 is the same for all three depths and includes determining if the percolation pond influence extends south of the ICDF. Please modify the	The rationales were supposed to refer to all depths, but inadvertently were formatted to appear otherwise. The table has been reformatted to indicate that the rationales apply to all depths.

ICDF 90% DRAFT FINAL DESIGN PACKAGE

DRAFT FINAL DOCUMENT REVIEW, COMMENT, RESOLUTION LIST – IDEQ

DOCUMENT TITLE: Draft Final RD/CWP, DOE/ID-10955, Appendix S

Item	Section/ Figure/ Appendix	Page	Comment	Resolution
			rationale.	
67	Ssection 4.3.1, Table 4-4	4-3	Please verify that the detection limit for I-129 is only 1 pCi/L using LSC. Information provided on another project cites a detection limit of 0.1 pCi/L for the same method.	Ultra-low-level Liquid Scintillation Spectrometry run by Acculabs was capable of getting down to 0.1 pCi/L. Standard LSC gets down to 1 pCi/L. Acculabs has declared bankruptcy. TRA uses high efficiency LEPS to reach 0.1 pCi/L. Eight liters of water are needed to get down to 0.1 pCi/L. Therefore, it may be difficult to collect sufficient water from the perched wells to achieve the 0.1 pCi/l. If insufficient water is available, a smaller sample volume will be collected to achieve the lowest possible detection limit for the perched water wells. 0.1 pCi/L will be used as the detection limit for baseline sampling. Text will be modified.
68	Section 4.3.2, Table 4-5	4-3 & -4	The description for collecting duplicate samples should be modified to include one duplicate sample per 20 samples collected except where both perched aquifer and Snake River Plain Aquifer wells are sampled during the same sampling event. In that case, a duplicate sample from each type (perched aquifer and regional aquifer) should be collected even if the number of duplicate samples exceeds the one per 20 criterion. The additional duplicate sampling may be removed in the future if the data so warrant after discussions between the agencies.	Perched water and SRPA water are the same media and one duplicate will be collected per 20 samples. No change to text. Will collect both the filtered vs unfiltered water samples for metals samples only. If insufficient water is available, only the unfiltered sample for metals will be collected for baseline purposes only. An additional duplicate water sample will be collected from the unfiltered perched water sample. The notation concerning the duplicate sample collection frequency will be clarified to indicate that a minimum of 1 duplicate sample will be collected for every 20 samples per sample event.
69	Section 5.3	5-1 & 5-2	**a)** This section should be split into two short subsections on purging. The first subsection should cover purging by pumping. The discussion about purging by bailing should form the second subsection and follow the same bullet format as the first. **b)** The first bullet should be modified to reflect the fact that the water level should continue to decline without recharge during pumping but the intent is to minimize	Text was inadvertently left out which will clarify a) and b). The text will indicate that a minimum period of 15 hours will be used.

ICDF 90% DRAFT FINAL DESIGN PACKAGE

DRAFT FINAL DOCUMENT REVIEW, COMMENT, RESOLUTION LIST – IDEQ

DOCUMENT TITLE: Draft Final RD/CWP, DOE/ID-10955, Appendix S				
Item	**Section/ Figure/ Appendix**	**Page**	**Comment**	**Resolution**
			drawdown during pumping. **c)** The purging by bailing subsection should present the option of returning within 24 to 36 hours to sample the well if the well was bailed dry during purging. The perched aquifers are expected to be low yield and sampling procedures may have to be modified after some experience has been gained.	
70	Section 7.1.5	7-2	A "completeness goal of 60% for the downgradient wells" is too low. The completeness goal should be 80%, which equates to missing one of the 5 down gradient monitoring wells during a sampling event. Please modify this goal.	Text will be modified.
71	Appendix A		This appendix, although brief, is a useful addition to the overall report. Inclusion of this appendix is appreciated.	Thank you. No response required.

ICDF 90% DRAFT FINAL DESIGN PACKAGE

DRAFT FINAL DOCUMENT REVIEW, COMMENT, RESOLUTION LIST – IDEQ

DOCUMENT TITLE: Draft Final ICDF RD/CWP, Appendix W, DOE/ID-10958				
Item	**Section/ Figure/ Appendix**	**Page**	**Comment**	**Resolution**
72	Section 4.3.2, 2nd para	4-3	The second sentence states: *"The container will be held in a CSA pending a HWD."* A specific timeframe should be defined for completing a Hazardous Waste Determination.	The language will be changed to read "The HWD must be conducted within 6 months of staging the container within the CSA."

ICDF 90% DRAFT FINAL DESIGN PACKAGE

DRAFT FINAL DOCUMENT REVIEW, COMMENT, RESOLUTION LIST – IDEQ

DOCUMENT TITLE: Draft Final ICDF RD/CWP, Appendix X, DOE/ID-10851

Item	Section/ Figure/ Appendix	Page	Comment	Resolution
73	Table II-5	II-18	This QA table indicates that 3% and outliers are allowed to fail the density requirements for the CCL. Section 4.2.1.2 of DOE/ID – 10851 states that any in-place density requirements which fail require two adjacent passing tests to satisfy requirements. This appears inconsistent, please clarify. Also, please clarify what is meant by outliers, and why additional testing is not required to ensure "outliers" do not indicate actual areas of substandard liner construction.	Text change will be made as follows to this document: "The 3% allowable failing tests are planned to cover mistakes that are made and discovered after the CCL is covered. This could include math errors, etc." "Outliers" will be deleted and will be included in the 3% allowable failing tests." Adjacent testing based on a failing test will be within 3 ft.

ICDF 90% DRAFT FINAL DESIGN PACKAGE

DRAFT FINAL DOCUMENT REVIEW, COMMENT, RESOLUTION LIST – IDEQ

Table 2-1. Summary of acceptable types of wastes for the ICDF evaporation pond WAC.

Waste Type Accepted at the ICDF	Content Accepted
ICDF leachate	All ICDF leachate is acceptable. LDRs do not apply, because the ICDF evaporation pond is a CAMU for the ICDF leachate.
ICDF Complex operations waste	Aqueous waste from ICDF Complex operations must meet the applicable hazardous and radioactive ICDF evaporation pond WAC.
WAG 3 and ICDF Complex groundwater monitoring waste	Groundwater monitoring waste (e.g., purge, development, sampling, and decontamination water) will be accepted at the ICDF evaporation pond if it meets the hazardous and radiological evaporation pond WAC.

Appendix FF

Permeable Reactive Barrier Decision Analysis

EDF-ER-273

TO VIEW APPENDIX FF SEE:

DOCUMENT ID NUMBER – EDF-ER-273, REV.02

Appendix GG

Leachate Generation Study

EDF-ER-269

TO VIEW APPENDIX GG SEE:

DOCUMENT ID NUMBER – EDF-ER-269, REV.01