ANL-7529

EMD

ANL-7529

Argonne National Laboratory

DYNAMIC ANALYSIS OF LIQUID-METAL-COOLED FAST POWER REACTORS

by

J. A. DeShong, Jr.

The facilities of Argonne National Laboratory are owned by the United States Government. Under the terms of a contract (W-31-109-Eng-38) between the U. S. Atomic Energy Commission, Argonne Universities Association and The University of Chicago, the University employs the staff and operates the Laboratory in accordance with policies and programs formulated, approved and reviewed by the Association.

MEMBERS OF ARGONNE UNIVERSITIES ASSOCIATION

The University of Arizona
Carnegie-Mellon University
Case Western Reserve University
The University of Chicago
University of Cincinnati
Illinois Institute of Technology
University of Illinois
Indiana University
Iowa State University
The University of Iowa
Kansas State University
The University of Kansas
Loyola University
Marquette University
Michigan State University
The University of Michigan
University of Minnesota
University of Missouri
Northwestern University
University of Notre Dame
The Ohio State University
Ohio University
The Pennsylvania State University
Purdue University
Saint Louis University
Southern Illinois University
University of Texas
Washington University
Wayne State University
The University of Wisconsin

LEGAL NOTICE

This report was prepared as an account of Government sponsored work. Neither the United States, nor the Commission, nor any person acting on behalf of the Commission:

A. Makes any warranty or representation, expressed or implied, with respect to the accuracy, completeness, or usefulness of the information contained in this report, or that the use of any information, apparatus, method, or process disclosed in this report may not infringe privately owned rights; or

B. Assumes any liabilities with respect to the use of, or for damages resulting from the use of any information, apparatus, method, or process disclosed in this report.

As used in the above, "person acting on behalf of the Commission" includes any employee or contractor of the Commission, or employee of such contractor, to the extent that such employee or contractor of the Commission, or employee of such contractor prepares, disseminates, or provides access to, any information pursuant to his employment or contract with the Commission, or his employment with such contractor.

Printed in the United States of America
Available from
Clearinghouse for Federal Scientific and Technical Information
National Bureau of Standards, U. S. Department of Commerce
Springfield, Virginia 22151
Price: Printed Copy $3.00; Microfiche $0.65

ANL-7529
Reactor Technology

ARGONNE NATIONAL LABORATORY
9700 South Cass Avenue
Argonne, Illinois 60439

DYNAMIC ANALYSIS OF LIQUID-METAL-COOLED FAST POWER REACTORS

by

J. A. DeShong, Jr.

Reactor Physics Division

January 1969

TABLE OF CONTENTS

	Page
ABSTRACT	7
I. INTRODUCTION	7
II. LINEAR REACTOR CORE DYNAMICS	8
A. Heat Transfer of Core Fuel Element	8
B. Coolant Void Effect	9
C. Fuel Axial-expansion Effect	10
D. Axial Expansion of Control Rod and Subassembly	10
III. THERMOMECHANICAL DISTORTION AND MOVEMENT OF THE CORE FUEL ELEMENTS	13
A. BOW III Computer Program for Determination of Equilibrium Reactivity	14
B. Heat-transfer Dynamics of Reflector Subassemblies	15
C. Calculation of Structure Dynamic Reactivity	17
IV. SYSTEM BLOCK DIAGRAM OF CORE DYNAMICS	20
A. EBR-II System Diagram	20
B. Calculated Reactivity Time Response to a Reactor Rod Drop	21
V. SUMMARY AND CONCLUSIONS	21
APPENDIXES	
A. Dynamic Heat-transfer Calculations	23
1. Fuel Subassembly; Rows 1-6	23
2. Blanket Subassembly; Row 9	26
3. Blanket Subassembly; Rows 10-15	27
4. Control Rod Section L_1	28
5. Plenum Effect	28
6. Control Rod Section L_2	29
7. Control Rod Section L_3	29
8. Control Rod Section L_4	30

TABLE OF CONTENTS

Page

B. BOW III Thermomechanical Structure Analysis 32

1. Theoretical Bending of Subassemblies due to Combined Nozzle, Button, and Top Loading 32
2. BOW III Computer Program 35
3. Calculation of Input Quantities 38
4. BOW III Sample Run 40

C. Reflector Heat-transfer Dynamics 60

1. Reflector Subassembly; Row 7 60
2. Reflector Subassembly; Row 8 63

D. PROFILE Temperature Calculations 65

E. DYNAMIC Reactivity Calculations 77

ACKNOWLEDGMENT 89

REFERENCES 90

LIST OF FIGURES

No.	Title	Page
1.	Cross Section of Fuel Element	8
2.	Heat-flow Diagram for Fuel Element	9
3.	Control-rod Suspension	11
4.	Cross Section of Control Drive Rod at L_3	12
5.	Cross Section of Control Drive Rod at L_4	12
6.	Heat-flow Diagram for the Control Drive Rod	13
7.	Equilibrium Feedback Reactivity of Structure	15
8.	Cross Section of Reflector Subassembly	15
9.	Heat-flow Diagram for Reflector Subassembly	16
10.	Power Variation with Time for a Rod-drop Experiment	17
11.	Dynamic Change in Row Differential Temperature Profiles	19
12.	System Block Diagram of EBR-II Core Dynamics	20
13.	Calculated Reactivity Variation with Time for a Rod-drop Experiment	21
B.1.	Subassembly as a Loaded Beam	32
B.2.	Subassembly M/EI Diagram and Radial Displacement	33
B.3.	Rotation of Subassembly in Spherical Pivot Support	34
B.4.	BOW III Module	38
D.1.	PROFILE Input Function	65

LIST OF TABLES

No.	Title	Page
I.	Physical Properties of Type 304 Stainless Steel, Liquid Sodium, and Uranium	23
II.	BOW III Bending Modes	33
III.	BOW III FORTRAN Quantities	36
IV.	Reactivity Evaluation of Sample Output	40
V.	PROFILE FORTRAN Quantities	66
VI.	C(t) for Rows 6-10	67
VII.	DYNAMIC FORTRAN Quantities	77

DYNAMIC ANALYSIS OF LIQUID-METAL-COOLED FAST POWER REACTORS

by

J. A. DeShong, Jr.

ABSTRACT

The small-signal dynamic behavior of liquid-metal-cooled fast power reactors is analyzed by means of feedback control theory.

Transfer functions to calculate dynamic feedback reactivity generated by fuel expansion, sodium void effect, and thermal motion of control rods are developed, as well as a computer program to calculate dynamic feedback reactivity produced by thermomechanical distortion and movement of the core fuel elements. A theoretical block diagram of the EBR-II reactor system is constructed from these elements.

I. INTRODUCTION

The dynamic behavior of liquid-metal-cooled fast reactors is sensitive to many factors that influence reactivity, such as sodium void effect, axial thermal expansion of fuel, heat transfer from fuel to coolant, Doppler effect in large cores, and the radial movement and distortion of fuel subassemblies due to thermal gradients in the core. This report describes the results of a study made of a specific reactor for the purpose of developing a theoretical description of the reactor core dynamics.

The following sections develop in dynamic form the linear components of feedback reactivity by using heat-transport considerations. The linear treatment is suitable for everything but the structural distortion, where the structural component movements all interact on each other in a complex way. The latter case is attacked by numerical analysis using a computer program, BOW III, developed to analyze a specific reactor core structure as an example. Static heat-transfer calculations were made by Cushman to develop radial differential temperature profiles of the fuel subassembly.[1] These profiles are used as input to the BOW III program to calculate the static power-reactivity coefficient, which is defined as the reactivity generated by structural movement due to a specific change of reactor operating power from one equilibrium value to another.

The dynamic reactivity change due to structural motion is obtained by making heat-transfer calculations to determine dynamic radial and axial temperature response to a rod-drop reactor power-time function. The calculated dynamic temperatures are used to obtain the differential temperature profiles at specified times over the time range of interest. These profiles then are inputed to the BOW III program to determine the structural positions at the specified times. The dynamic motion of the structure in response to a rapid change in reactor power could also be influenced by mechanical inertia, spring constants, and damping. However, for the chosen example, the motions and therefore the inertial forces are small, while the spring constants expressed in force per unit distance are very large. Therefore the mechanical movements are assumed to follow the temperature changes with no time lag.

All the foregoing work is combined to develop a system block diagram to represent the theoretical core dynamics of the EBR-II reactor.

II. LINEAR REACTOR CORE DYNAMICS

A. Heat Transfer of Core Fuel Element

The individual fuel element is taken as a right circular cylinder, divided into two annular regions of equal volume, shown as ① and ② in Fig. 1, which is a cross section of the cylinder. These are surrounded by another annular region of coolant, shown as ③. Then D_2, the outside diameter of the inner volume, is 0.707 times D_4, which is the outside diameter of the outer volume. The heat capacity of each volume can be lumped at $D_1 = 0.5D_4$ for the inner volume and $D_3 = 0.866D_4$ for the outer volume. The heat generated in each volume is taken as originating at these same diameters. R_1, then, is the reciprocal conductivity from the inner to the outer volume, and R_2 is the reciprocal conductivity from the outer volume to the coolant surface, including any film effect. R_3 is the reciprocal conductivity from the fuel-element surface radially to the center of mass of the coolant. These are reciprocal conductivities evaluated using the fuel-element length (L).

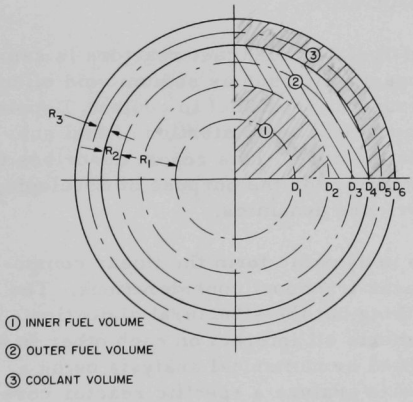

Fig. 1. Cross Section of Fuel Element

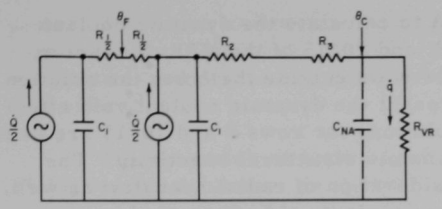

Fig. 2. Heat-flow Diagram for Fuel Element

Figure 2 shows the above quantities assembled into a heat-flow diagram. The lumped heat capacity of each half-volume is designated C_1, and the heat generation rate in each half-volume as $\dot{Q}/2$ calories per second. The coolant heat capacity is represented by C_{Na}, and the heat deposition rate into the coolant by $\dot{q}$. The heat transport rate out of the core, as a result of coolant flow, determines R_{VR}. All of these are evaluated based on the fuel-element length, L. Average fuel temperature over length L is θ_F; average coolant temperature over L is θ_C. In this study, heat transport time in the coolant is negligibly small compared to the basic fuel-assembly time constant, since flow velocities are high. The above temperatures, therefore, are those at the core centerline.

B. Coolant Void Effect

The dynamic void reactivity produced by the thermal expansion of the liquid-metal coolant can be expressed in the Laplace transform as

$$\text{Laplace}[F(K\theta_c/\dot{Q})] = \rho_c K_c \times \text{Laplace}[F(\theta_c/\dot{Q})],$$

where ρ_c is the reactivity change per unit density change, and K_c is the coolant density change per unit coolant temperature change. The transform quantity on the right of the above equation is the solution to the heat-flow diagram of Fig. 2. If C_{Na} is small and can be neglected as in the case considered here, the solution is a quadratic expression of the form

$$\frac{\dot{q}(s)}{\dot{Q}(s)} = \frac{1 + \frac{sR_1C_1}{2}}{1 + s(R_1 + 2R_4)\,C_1 + s^2R_1R_4C_1^2},$$

where

$$R_4 = R_2 + R_3 + R_{VR}.$$

Then,

$$\theta_c = \dot{q}R_{VR},$$

and

$$\text{Laplace}[F(K\theta_c/\dot{Q})] = \frac{\rho_c K_c R_{VR}\left(1 + \frac{sR_1C_1}{2}\right)}{1 + s(R_1 + 2R_4)\,C_1 + s^2R_1R_4C_1^2}.$$

This expression is used in Appendix A to calculate the dynamic coolant temperature response for rows 1-6, 9, and 10-15 of the EBR-II reactor. Since the value of ρ_c is very small for rows outside the core, the solution for core rows 1-6 was chosen to represent the dynamic coolant void effect in Section IV.A of this report. The solutions for rows 9 and 10-15 are used later in Section III.B to develop the dynamic structural reactivity. The solutions of rows 7 and 8 require consideration of radial heat flow as well, but, since rows 7 and 8 have only minor coolant void effect, their solution will be given in Section III.B, where they have a large influence on the structural reactivity component.

C. Fuel Axial-expansion Effect

The fuel axial-expansion effect is considerable with metallic fuel such as that used in EBR-II and similar reactors. The dynamic fuel expansion can be expressed in Laplace transform as

$$\text{Laplace}[F(K\theta_F/\dot{Q})] = \rho_F K_F \times \text{Laplace}[F(\theta_F/\dot{Q})],$$

where ρ_F is the reactivity change per unit change in core length, K_F is the thermal-expansion coefficient of the fuel, and θ_F is the average fuel temperature, defined as the temperature in the fuel at 0.707 of the fuel outside diameter.

The transform quantity on the right above can be shown to be

$$\frac{\theta_F(s)}{\dot{Q}(s)} = \frac{4R_4 + R_1}{4} \cdot \frac{1 + sC_1 \dfrac{2R_1R_4}{4R_4 + R_1}}{1 + s(R_1 + 2R_4)\, C_1 + s^2 R_1 R_4 C_1^2}.$$

Then,

$$\text{Laplace}[F(K\theta_F/\dot{Q})] = \rho_F K_F \cdot \frac{4R_4 + R_1}{4} \cdot \frac{1 + sC_1 \dfrac{2R_1R_4}{4R_4 + R_1}}{1 + s(R_1 + 2R_4)\, C_1 + s^2 R_1 R_4 C_1^2}.$$

The above expression is used in Appendix A to calculate the dynamic fuel expansion response for rows 1-6. This solution appears as the fuel axial expansion in Section IV.A.

D. Axial Expansion of Control Rod and Subassembly

A reactor whose control subassemblies are suspended from above and immersed in the coolant can generate feedback reactivity due to axial thermal expansion of the rods as the coolant temperature changes with

power. In certain cases, the amount of such reactivity plays a significant part in the total feedback. Such is the case with the EBR-II reactor, where the control-rod drives are calibrated at equilibrium powers to correct for this effect.[2]

The dynamics of such expansion, which forms an important part of the system dynamics, is determined by dividing the length of the rod and the subassembly into sections, each of which possesses characteristic dynamic heat-flow properties. Calculations of the properties of each section are then used in combination to represent the way in which the total drive length, and thereby the feedback reactivity, varies with reactor power.

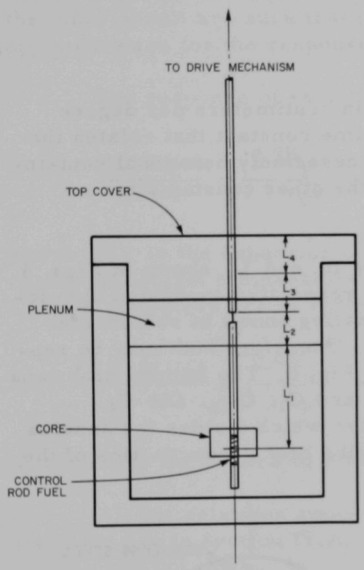

Fig. 3. Control-rod Suspension

The EBR-II control rod and subassembly can be divided into four sections, which possess distinctly different dynamic heat-transfer characteristics. The sections are shown as L_1 through L_4 in Fig. 3, which is a sketch of the control-rod suspension.[3]

The first section (L_1) will expand or contract in a way governed by its coolant temperature (θ_c) and by the transport time required for a coolant temperature change to travel the length of the section. The relation of coolant temperature and power can be taken from Section II.A above, and a single time-constant equivalent assumed for the transport lag. The transform of feedback reactivity divided by power change for section L_1 then is

$$\frac{(\delta K/K)(s)}{\Delta P(s)} = \frac{2K_L\left(1 + \frac{sR_1C_1}{2}\right)}{1 + s(R_1 + 2R_3)\,C_1 + s^2R_1R_3C_1^2} \cdot \frac{C_{L_1}W}{1 + \tau_T s},$$

where $2K_L$ is the equilibrium change in fuel subassembly coolant temperature with power, in units of degrees centigrade per megawatt; C_{L1} is the expansion of section L_1, in units of centimeters per degree change in coolant temperature; W is feedback reactivity in units of $\delta K/K$ per centimeter of fuel movement; and τ_T is 0.63 times the transport time of the coolant through L_1. The remaining R's and C's are those defined in Section II.A.

All the remaining sections (L_2, L_3, and L_4) respond to plenum coolant temperature, which in EBR-II is delayed with respect to the fuel subassembly coolant temperature by the coolant holdup time of the upper plenum shown in Fig. 3. If a simple lag represents the holdup time, the transform of plenum temperature divided by power change is

$$\frac{\Delta\theta_P(s)}{\Delta P(s)} = \frac{K_p}{1 + \tau_p s},$$

where K_p is the equilibrium change in plenum coolant temperature with power, in units of degrees centigrade per megawatt, and τ_p is 0.63 times the plenum coolant holdup time. This assumes that core coolant transport can be neglected as short compared to plenum holdup time, and that blanket coolant transport time can be neglected because of the small amount of heat it supplies to the plenum. Now that the plenum temperature response is available, the response of control rod section L_2 to power is

$$\frac{(\Delta K/K)(s)}{\Delta P(s)} = \frac{K_p}{1 + \tau_p s} \cdot \frac{C_{L2} W}{1 + \tau_{L2} s},$$

where C_{L2} is the expansion of section L_2, in centimeters per degree change in coolant temperature, τ_{L2} is the time constant that relates the internal temperature of the 0.1-cm-thick subassembly hexagonal containment shell to the coolant temperature, and the other constants are as previously defined.

The radial heat transfers of sections L_3 and L_4 shown in Figs. 4 and 5 must be calculated to determine their respective expansion characteristics. Both sections have similar alternating annuli of sodium and stainless steel, but of differing thicknesses. Therefore both may be represented by the radial heat-flow diagram in Fig. 6. The lumped heat capacities of the annuli from inner to outermost are C_1, C_{Na}, and C_2, respectively. Each is lumped at the diameter which divides the annulus into two equal volumes. The reciprocals of the heat conductivities of the

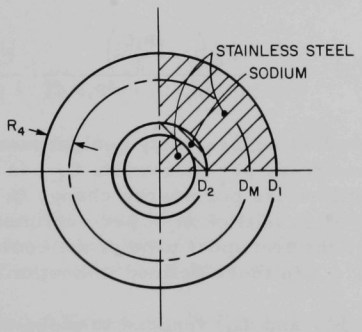

Fig. 4. Cross Section of Control Drive Rod at L_3

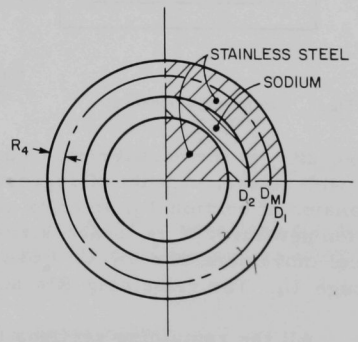

Fig. 5. Cross Section of Control Drive Rod at L_4

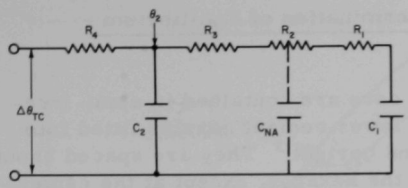

Fig. 6. Heat-flow Diagram for the Control Drive Rod

portions of annuli between these points of lumped heat capacity are designated R_1, R_2, R_3, and R_4 (proceeding from inner to outer annuli). The plenum coolant traverses an annulus between the reactor top cover hole and the drive rod that passes through this hole. The quantity $\Delta\theta_{TC}$, which represents the temperature of the coolant in this annulus, is assumed to be identical to $\Delta\theta_p$ but about 10% lower because of heat loss to the surrounding cover. Also, the practical magnitudes of the heat conductivities and capacities of the inner annuli are such that only R_4 and C_2 are needed to obtain a good approximation for the responses of sections L_3 and L_4.

The response of section L_3 to power is

$$\frac{(\delta K/K)(s)}{\Delta P(s)} = \frac{0.9K_p}{1 + \tau_p s} \cdot \frac{C_{L_3}W}{1 + \tau_{L_3}s},$$

where C_{L_3} is the expansion of section L_3, in centimeters per degree change of coolant temperature, τ_{L_3} is R_4 times C_2 evaluated for section L_3, and the others are as defined above. Similarly,

$$\frac{(\delta K/K)(s)}{\Delta P(s)} = \frac{0.9K_p}{1 + \tau_p s} \cdot \frac{C_{L_4}W}{1 + \tau_{L_4}s},$$

with similar definitions to those above but relating to section L_4.

All the relations appearing in this section are evaluated in Appendix A for use in Section IV.A.

III. THERMOMECHANICAL DISTORTION AND MOVEMENT OF THE CORE FUEL ELEMENTS

This section is specialized in the sense that any structural treatment must necessarily relate to a specific design, in this case, the EBR-II reactor core design. The effect of the small core is to make reactivity sensitive to fuel subassembly movements as small as one-thousandth of an inch. Small thermomechanical motions of the subassemblies are therefore important to the reactor dynamics and must be calculated to determine the structural feedback reactivity component.

A. BOW III Computer Program for Determination of Equilibrium Reactivity

The fuel elements of the EBR-II core are contained in semi-free-standing hexagonal subassemblies, with lower coolant nozzles fitted into holes in two grid plates so that they stand upright.[3] They are spaced about 1/32 in. from each other on all sides of the hexagon, except at the center. At the center, buttons are embossed to reduce spacing to 2 mils to limit movement, but still allow the subassemblies to "flower" outward at the top in response to radial thermal gradients that develop due to heat transfer as reactor power increases. Many combinations of subassemblies such as core and inner and outer blanket types are possible, but the chief interest is in the combination used in reactor run No. 26, where considerable positive structural feedback was observed. This run and its loading are described and analyzed in Refs. 2 and 4, where the bowing problem is discussed in detail.

Bump[5] later developed a method of numerical analysis, known as the BOW II computer program, to compute the structural distortion of the subassemblies by treating them as loaded flexible structural beams. The output of this program, which used approximations for the beam formulas, showed positive reactivities corresponding roughly to the amount of positive reactivity that could be postulated from reactor measurements from which other known reactivity effects were subtracted. To make dynamic analysis possible, I calculated the actual beam formulas representing the various modes of bending in the subassemblies and incorporated them into a new program known as BOW III. The bending modes and the formulas are given in Appendix B along with the method used to calculate the formulas. The FORTRAN description of BOW III appears in the same appendix. The input required for the program includes data about the subassembly mechanical properties and the equilibrium radial differential temperatures of the subassembly evaluated for 10 axial positions along each subassembly. References 1 and 2 describe the method of determining the differential temperatures.

The output of BOW III is a listing of the equilibrium radial locations of each subassembly at 10 axial positions. The core is influenced chiefly by positions 4, 5, and 6, which represent the bottom, center, and top of the core. The weighted position shift of each row of subassemblies is determined from BOW III data, and then the reactivity worth of the shift evaluated by using constants developed for rows 6, 7, 8, and 9. This evaluation assumes that the structure from row 6 to the core center shrank or expanded radially in proportion to the row 6 movement. Thus the entire core reactivity change is evaluated in terms of row 6. The effects of rows 7, 8, and 9 on reactivity are calculated using the respective constants for each row; rows further out have greatly reduced effect and are neglected.

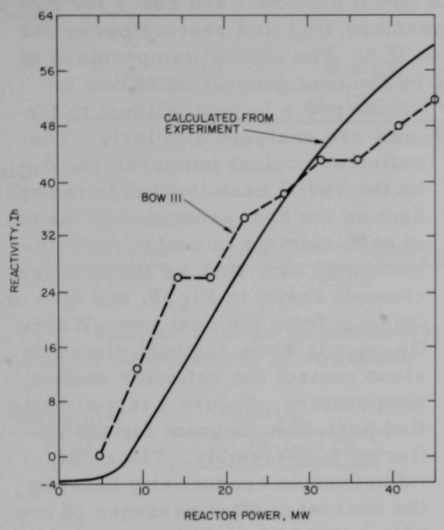

Fig. 7. Equilibrium Feedback Reactivity of Structure

Appendix B gives the constants for rows 6, 7, 8, and 9, in inhours per mil, together with the differential temperature profiles and subassembly mechanical properties used as input to BOW III to calculate the equilibrium reactivity curve shown in Fig. 7. Also shown in Fig. 7 is an experimental curve taken from Ref. 6. Convergence difficulties cause the lack of smoothness in the calculated curve, although in general the two curves are in good agreement.

B. Heat-transfer Dynamics of Reflector Subassemblies

The stainless steel reflector subassemblies in rows 7 and 8 receive an appreciable amount of heat due to radial heat transfer from row 6 to row 7 and from row 9 to row 8. This transfer of heat must be taken into consideration, and therefore rows 7 and 8 cannot be treated as the other rows were in Section II.A.

An approximate treatment is used, which includes a number of assumptions and is based on the results of equilibrium calculations contained in Ref. 1. The subassemblies of both rows 7 and 8 contain 19 solid stainless steel rods, which are 1.25 cm in outside diameter and 140 cm long, centered about the core axial centerline. Figure 8 shows a subassembly cross section. In this figure, Q_{Radial} is the heat flow between rows 6 and 7 or between rows 9 and 8. Zero heat flow is assumed between rows 7 and 8. The individual axial coolant passages act as effective heat barriers in the radial direction. Therefore the temperature of the subassembly hexagonal can on the radial heat-input side will assume a temperature between that of its own immediately adjacent coolant, θ_{7Cin}, and that of the coolant in the adjacent subassembly hexagonal

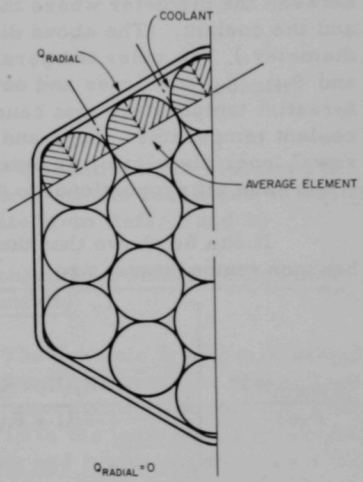

Fig. 8. Cross Section of Reflector Subassembly

can. The adjacent subassembly can is row 6 for row 7 and row 9 for row 8. The relation between the coolant temperature (θ_C) and reactor power for rows 6 and 9 was determined in Section II.A. The coolant temperature of row 6 is controlled almost completely by the heat generation in row 6. Therefore the radial heat flow to row 7 from row 6 is proportional to the coolant temperature of row 6. Rows 9 and 8 are analyzed similarly. The reflector coolant temperature, θ_{7Cin}, on the radial heat-input side is dependent on the heat generated in the half of each element in contact with the hexagonal can, such as the average element shown in Fig. 8, and also on Q_{Radial} from the next row. Where Q_{Radial} is zero, the half-elements alone control the reflector coolant temperature. Figure 9 is a simplified heat-flow diagram for the reflector subassembly. The chief influences on conductivity between the nearest coolant passages of two adjacent subassemblies are the hexagonal cans themselves. Then the total reciprocal conductivity of two hexagonal thicknesses in series is $2R_1$. R_{VR} is the effective reciprocal conductivity due to heat removal by coolant flow. The reciprocal heat conductivity of one half-element facing an outer coolant passage is twice that of a full element, or $2R_2$, where R_2 is the value calculated for heat flow between the diameter where the full element heat capacity (C_1) is lumped and the coolant. (The above diameter is 0.707 times the element outside diameter.) The outer temperature of the row 6 hex is $\theta_{6Hexout}$; θ_{7Hexin} and $\theta_{7Hexout}$ are inner and outer temperatures of the row 7 hex. The differential temperature that causes the bowing is designated ΔT_7. The row 6 coolant temperature (θ_6C) and the heats generated internally in half of a row 7 inner element or an outer element (designated Q_0 and Q_{00}, respectively) are all proportional to the reactor power (P).

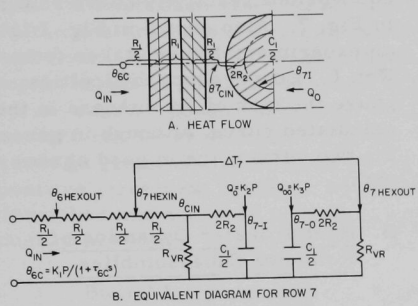

Fig. 9. Heat-flow Diagram for Reflector Subassembly

It can be shown that the Laplace transforms of the inner and outer hexagon temperatures are

$$\frac{\theta_{7Hexin}(s)}{P(s)} = \left[K_1 - \frac{1.5R_1(K_1 - K_2R_{VR})}{2R_1 + R_{VR}} \cdot \frac{1 + \dfrac{sC_1(2R_2 + R_{VR})}{2\left(1 - \dfrac{K_2R_{VR}}{K_1}\right)}}{1 + \dfrac{sC_1(2R_2 + R_{VR} - R_{VR}^2)}{2}} \right] \cdot \frac{1}{1 + \tau_{6C}s}$$

and

$$\frac{\theta_{7}\mathrm{Hexout}(s)}{P(s)} = \frac{K_3 R_{VR}}{1 + \dfrac{sC_1(R_{VR} + 2R_2)}{2}}.$$

Then,

$$\frac{\Delta T_7(s)}{P(s)} = \frac{\theta_{7}\mathrm{Hexin}(s) - \theta_{7}\mathrm{Hexout}(s)}{P(s)}.$$

Similarly it can be shown that the transforms for the inner and outer hexagon temperatures of row 8 are

$$\frac{\theta_{8}\mathrm{Hexin}(s)}{P(s)} = \frac{K_6 R_{VR}}{1 + \dfrac{sC_1(R_{VR} + 2R_2)}{2}},$$

$$\frac{\theta_{8}\mathrm{Hexout}(s)}{P(s)} = \left[K_4 - \frac{1.5R_1(K_4 - K_5 R_{VR})}{2R_1 + R_{VR}} \cdot \frac{1 + \dfrac{sC_1(2R_2 + R_{VR})}{2\left(1 - \dfrac{K_5 R_{VR}}{K_4}\right)}}{1 + \dfrac{sC_1(2R_2 + R_{VR} - R_{VR}^2)}{2}} \right] \cdot \frac{1}{1 + \tau_9 C s},$$

and

$$\frac{\Delta T_8(s)}{P(s)} = \frac{\theta_{8}\mathrm{Hexin}(s) - \theta_{8}\mathrm{Hexout}(s)}{P(s)}.$$

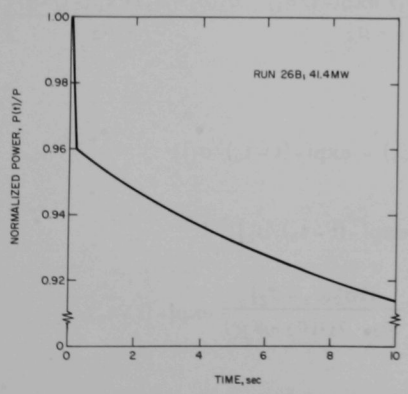

Fig. 10. Power Variation with Time for a Rod-drop Experiment

The above equations are evaluated in Appendix C for the conditions of Run 26, using data from Refs. 1 and 2.

C. Calculation of Structure Dynamic Reactivity

The dynamic feedback reactivity is calculated by inputing a rod-drop reactor power-time function[7] like that in Fig. 10 to the individual row dynamic equations and evaluating them as a function of time. Each row time function that results will have a specific value at a given time, which may be used to multiply the starting power differential profile (T_Δ) for the row to obtain the

new profile at the given time. The general form then is

$$(T\Delta)_{[t]} = (P/45)\left((T\Delta)_{[P=45MW,t=0]}\right)[1+C(t)],$$

where P is the starting power in megawatts, and C(t) is a function that describes the time behavior of a particular row. When the rod-drop reactor power-time function is represented by a ramp plus an exponential, as in Fig. D.1, C(t) has two general forms, which can be used to describe all rows. These are:

1. Rows 1-6 and 9-15

For $t \leq t_0$,

$$C(t) = \left(\frac{\Delta P}{P}\right)_{t_0} \frac{\sigma_1}{t_0}\left[\exp(-t/\sigma_1) + \frac{t}{\sigma_1} - 1\right].$$

For $t > t_0$,

$$C(t) = K_B + \left(\frac{\Delta P}{P}\right)_{t_0} \frac{\sigma_1}{t_0}\left\{\exp(-t/\sigma_1) - \exp[-(t-t_0)/\sigma_1]\right\}$$

$$+ K\,\frac{\tau_K \exp[-(t-t_0)/\tau_K] - (\sigma_1)\exp[-(t-t_0)/\sigma_1]}{\sigma_1 - \tau_K}.$$

2. Rows 7 and 8

For $t \leq t_0$,

$$C(t) = \frac{(\Delta P/P)_{t_0}}{t_0}\left\{(t - \sigma_1 - \sigma_2 + \sigma_3) + \frac{\sigma_1(\sigma_1 - \sigma_3)\exp(-t/\sigma_1)}{\sigma_1 - \sigma_2} - \frac{\sigma_2(\sigma_2 - \sigma_3)\exp(-t/\sigma_2)}{\sigma_1 - \sigma_2}\right\}.$$

For $t > t_0$,

$$C(t) = K_B + (\Delta P/P)_{t_0}\frac{\sigma_1(\sigma_1 - \sigma_3)}{t_0(\sigma_1 - \sigma_2)}\{\exp(-t/\sigma_1) - \exp[-(t-t_0)/\sigma_1]\}$$

$$+ (\Delta P/P)_{t_0}\frac{\sigma_2(\sigma_2 - \sigma_3)}{t_0(\sigma_2 - \sigma_1)}\{\exp(-t/\sigma_2) - \exp[-(t-t_0)/\sigma_2]\}$$

$$+ \frac{K\sigma_1(\sigma_3 - \sigma_1)}{(\sigma_1 - \sigma_2)(\sigma_1 - \tau_K)}\exp[-(t-t_0)/\sigma_1] + \frac{K\sigma_2(\sigma_3 - \sigma_2)}{(\sigma_2 - \sigma_1)(\sigma_2 - \tau_K)}\exp[-(t-t_0)/\sigma_2]$$

$$+ \frac{K\tau_K(\sigma_3 - \tau_K)}{(\tau_K - \sigma_1)(\tau_K - \sigma_2)}\exp[-(t-t_0)/\tau_K].$$

Values for the constants in the above functions are obtained from Appendix D, and C(t) is then evaluated by means of a computer program, PROFILE, whose output consists of decks of temperature profiles in BOW III format (see Appendix D). These are then inputed to BOW III to obtain the dynamic reactivity response to the specified $\Delta P/P$ time function. Initial calculations have shown large fluctuations, which are caused by convergence difficulties in the BOW III program. A new BOW IV program is being developed to eliminate these problems.

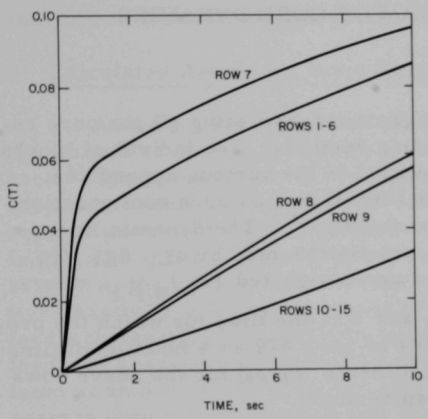

Fig. 11. Dynamic Change in Row Differential Temperature Profiles

The above C(t)'s can be used to estimate the structure feedback reactivity. The C(t)'s plotted in Fig. 11 are for Run 26B (see Table VI in Appendix D) as calculated by PROFILE. The equilibrium starting value for all rows is 1.0, so that the profile differential temperatures for row 7, for example, would all be multiplied by 1.097 at 10 sec. The reactivity worths of rows 6 and 7 dominate rows 8 and 9, and row 6 tends to follow the row 7 position. Therefore, if rows 6 and 7 are assumed to move inward with a position change similar to the temperature changes shown in Fig. 11 for row 7, the reactivity change can be estimated. Figure 7 indicates that the calculated BOW III curve changes about 54 Ih from 0 to 45 MW. This is about 1.2 Ih/MW or 3.7×10^{-3} \$/MW. Then the positive structure reactivity change for the rod-drop can be estimated as

$$(\Delta k/k)_t = (3.7 \times 10^{-3})(41.4 \text{ MW})[C(t)],$$

$$(\Delta k/k)_{1sec} = 3.7 \times 10^{-3} \times 41.4 \times -5.77 \times 10^{-2} = -9.0 \times 10^{-3},$$

$$(\Delta k/k)_{3sec} = 3.7 \times 10^{-3} \times 41.4 \times -7.00 \times 10^{-2} = -10.8 \times 10^{-3},$$

and

$$(\Delta k/k)_{10sec} = 3.7 \times 10^{-3} \times 41.4 \times -9.71 \times 10^{-2} = -15.0 \times 10^{-3}.$$

If the above values are added to those in Fig. 13, the total reactivity feedback is

$$(\Delta k/k)_{1sec} = +3.7 \times 10^{-3} \text{ \$},$$

$$(\Delta k/k)_{3sec} = +5.5 \times 10^{-3} \text{ \$},$$

and

$$(\Delta k/k)_{10sec} = +10.3 \times 10^{-3}\ \$.$$

The corresponding experimental values were $+5.1 \times 10^{-3}$, $+6.25 \times 10^{-3}$, and $+9.2 \times 10^{-3}$ \$, respectively. The agreement is fortuitously good and indicates that the method is sound.

IV. SYSTEM BLOCK DIAGRAM OF CORE DYNAMICS

A. EBR-II System Diagram

Figure 12 is a system block diagram incorporating all the core reactivity feedbacks treated in the preceding sections. The individual blocks are shown in the simplified forms developed in the various appendixes, where each block was evaluated for the EBR-II Run 26 core configuration. P(s) is the EBR-II zero-power transfer function.[8,9] The dynamic linear expansions of the control-rod sections are represented by d_{L1}, d_{L2}, d_{L3}, and d_{L4}. The row temperature profiles are designated $(T_\Delta)_{N,P,t}$, where N is the row, P is the starting power, and t is the time for which the profile was calculated. The button positions of rows 6-9 as a function of time are shown as d_6-d_9. The reactivity coefficients (ρ_6-ρ_9) for the above rows are expressed in reactivity per unit displacement.

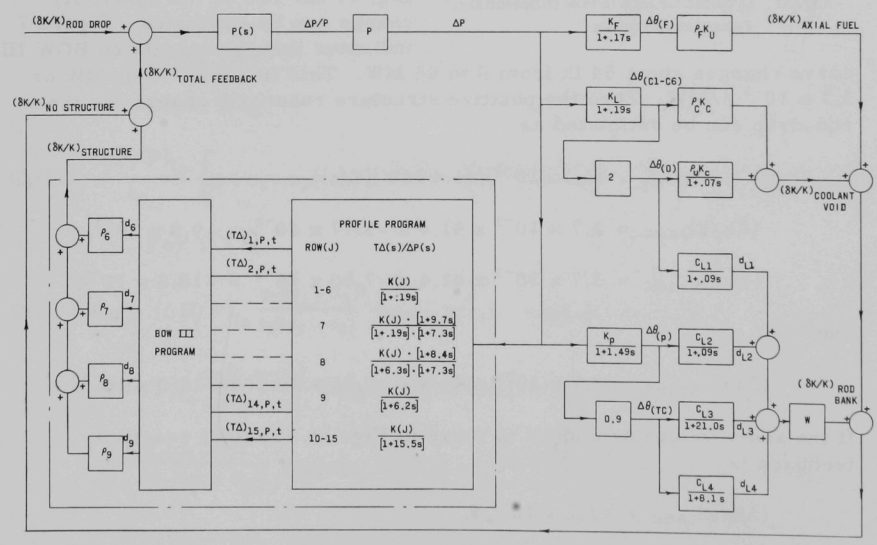

Fig. 12. System Block Diagram of EBR-II Core Dynamics

All elements on Fig. 12 are shown in the linearized transfer function form described in Ref. 9, except for the core structure component, which is the nonlinear element shown within the dot-dash lines. The core component could be shown in approximate transfer function form by the use of artificial time constants and coefficients which would not be directly related to physical heat-transfer phenomena. However, every set of reactor test conditions would lead to a new set of arbitrary constants and coefficients that would not be particularly useful for analytic purposes. Therefore, it is left as a nonlinear element, and the time domain is used for analysis in the following sections.

B. Calculated Reactivity Time Response to a Reactor Rod Drop

As mentioned in Section III, the EBR-II reactor experimental run No. 26 was of special interest because of the large positive structure feedback.[2] Therefore, from here on, the analysis is based on a specific rod-drop experiment done at 41.4 MW during run No. 26. The variation in reactor power with time which occurred during this experiment is shown in Fig. D.1. The continued falloff in reactor power after the fast ramp insertion of the control rod, as shown in Fig. D.1, will persist until the negative reactivity inserted by means of the rod is just compensated by the feedback reactivity regained by reduction in power. The total dynamic feedback reactivity generated by the remaining parts of Fig. 12 was calculated as in Section III.C for the structure by inputing the above rod-drop reactor power-time function into the point marked $\Delta P/P$ after opening the loop by removing P(s), the zero-power function. Time functions were calculated for each part by inverse Laplace transformation using the DYNAMIC computer program described in Appendix E. The power reactivity coefficients used for sodium expansion and for axial fuel expansion were those derived for Run 26B by Persiani et al.[6] Figure 13 is a plot of the individual functions and their sum.

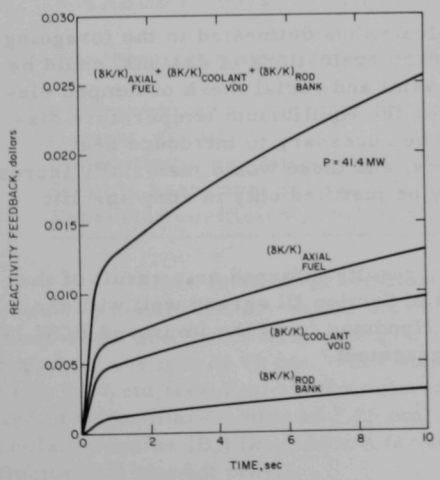

Fig. 13. Calculated Reactivity Variation with Time for a Rod-drop Experiment

V. SUMMARY AND CONCLUSIONS

The direct systems approach used in the preceding sections of this report has led to a theoretical description of the power behavior of a small liquid-metal-cooled fast breeder reactor. Although a detailed analysis of a particular reactor

(EBR-II) was made using the theory, it is emphasized that the time domain approach is a very powerful tool for the analysis of any reactor and that the methods described here have general application. These methods are particularly useful for determining the theoretical performance of preliminary reactor designs before construction. This would apply especially to a reactor whose cores are constructed of large numbers of long, slender fuel elements, which are loaded vertically into the core and which interact on each other as a result of the core axial and radial thermal gradients.

The analysis of the EBR-II reactor points up the need to consider carefully the thermal gradients in a core and the resulting thermomechanical core-movement effects on reactivity. The BOW III program permits a systematic evaluation of the effects of thermal and mechanical parameter variations on core reactivity, where the calculated final core subassembly positions are accurate to about 1 mil. This is not sufficient resolution for determining core thermomechanical dynamics, and, in fact, about another factor of ten improvement to 0.1 mil is required. An approach to this problem has been instituted in the BOW IV program presently being developed. In this program, the entire group of core subassemblies is considered as a large three-dimensional interacting array of springs with gradual increase in the number of subassemblies treated as a group as power is raised. This is unlike BOW III, where each subassembly is treated individually as if imprisoned between the subassemblies directly adjacent to it. Interaction information from more distant subassemblies is required, and BOW IV will provide this. The added information entering into the calculation should provide the desired position resolution.

The dynamic heat-transfer calculations delineated in the foregoing sections, while sufficient for preliminary evaluations of designs, could be based on a much more finely divided axial and radial mesh of lumped elements of the type used by Cushman[1] for the equilibrium temperature distributions used for BOW III. It would be necessary to introduce heat capacities and axial heat flow dynamics, and these would materially increase the labor required and would probably be justified only in very specific design cases.

The overall dynamic reactivity results inferred as a result of the calculated row 7 movement at the end of Section III agreed well with the experimental measurements made by Hyndman,[7] and the improved BOW IV program should lead to even better agreement.

APPENDIX A

Dynamic Heat-transfer Calculations

1. Fuel Subassembly; Rows 1-6

a. Dynamic Coolant Response

Since the heat generation rate ($\dot{Q}$) is proportional to reactor power (P), the expression for reactor coolant temperature on p. 9 can be rewritten as

$$\frac{\Delta\theta_c(s)}{\Delta P(s)} = \frac{K_L\left(1 + \frac{sR_1C_1}{2}\right)}{1 + s(R_1 + 2R_4)\,C_1 + s^2R_1R_4C_1^2},$$

where (as before)

$$R_4 = R_2 + R_3 + R_{VR}.$$

The various reciprocal heat conductivities (R's) and heat capacities (C's) can be calculated from the physical properties of the materials used. In all the examples given, liquid sodium (~700°F), Type 304 stainless steel (~700°F), or uranium are the main constituents. Their physical properties are listed in Table I.

TABLE I. Physical Properties of Type 304 Stainless Steel, Liquid Sodium, and Uranium

	304 SS	Sodium	Uranium
Density, g/cm^3	7.7	0.97	19.0
Conductivity, cal-cm/sec-cm^2-°C	0.048	0.174	0.082
Specific heat capacity, cal/g°C	0.115	0.305	0.038
Expansion coefficient, cm/cm°C	1.8×10^{-5}	-	-

Since internal generation of heat in the core subassemblies in rows 1-6 occurs chiefly within the core length of 36 cm, the calculations for these rows are based on this length, but the calculations for rows 9-15 are based on a length of 70 cm.[1] The outer diameter of the fuel pin (D_4) is taken to be 0.37 cm (see Fig. 1); the outer diameter of the stainless steel reflector and uranium blanket pins is 1.25 cm. The outside diameter of the effective coolant annulus (D_6) is ~0.54 cm for the fuel pin and ~1.33 cm for the reflector and blanket pins.

The heat capacity (C_1) of the equal inner and outer volumes (see Fig. 1) is

$$C_1 = \text{volume x density x specific heat capacity.}$$

For rows 1-6,

$$C_1 = \pi\left(\frac{0.707 \times 0.37}{2}\right)^2 \times 36 \times 19.0 \times 0.038 = 1.40 \text{ cal/°C.}$$

Since the heat capacities are lumped at diameters D_1 and D_3, the reciprocal heat conductivity (R_1) between these points is calculated using the mean cylindrical area and the radial distance between the two diameters. The reciprocal conductivity between D_3 and D_1 is

$$R_1 = \frac{\log_e (D_3/D_1)}{2\pi \times \text{conductivity} \times \text{length}}.$$

For rows 1-6,

$$R_1 = \frac{\log_e (0.866/0.50)}{2\pi \times 0.082 \times 36} = 0.0282\text{°C/cal-sec}^{-1}.$$

Similarly, for R_2,

$$R_2 = \frac{\log_e (1/0.866)}{2\pi \times 0.082 \times 36} = 0.0078\text{°C/cal-sec}^{-1}.$$

Then, for R_3, for a clad pin of the type used in EBR-II, the film and cladding total temperature drop can be approximated at power by making $R_3 = (R_1/2) + R_2$, or

$$R_3 = 0.0282/2 + 0.0078 = 0.0219\text{°C/cal-sec}^{-1}.$$

The core coolant temperature (θ_c) is taken as the average temperature or one-half the core outlet temperature, so that R_{VR} is compatible with the previously calculated R's, which are all mean values.

Then, for R_{VR},

$$Q_{Element} = (509 \text{ kW}/91)(238.9 \text{ cal-sec}^{-1}/\text{kW}) = 1342 \text{ cal-sec}^{-1};$$

$$R_{VR} = (T_{out}/2)/Q_{Element}$$

$$= [134/(2 \times 1.8)]/1342 = 0.026\text{°C/cal-sec}^{-1} \text{ (see Ref. 1).}$$

The coolant heat capacity (C_{Na}) is calculated in the same way that C_1 was treated.

For rows 1-6,

$$C_{Na} = (65/500) \times 36 \times 0.97 \times 0.305 = 1.38 \text{ cal/°C}.$$

The time constant represented by

$$\tau = \frac{R_{VR}(R_2 + R_3)}{R_{VR} + R_2 + R_3} C_{Na} = 0.019$$

is so small that it was possible to neglect C_{Na} in deriving the expression for $\Delta\theta_c(s)/\Delta P(s)$ given on p. 23. The evaluation of this expression for rows 1-6 is

$$\frac{\Delta\theta_c(s)}{\Delta P(s)} = \frac{K_L[1 + s(0.0282 \times 1.4/2)]}{1 + s(0.0282 + 0.1114)\ 1.4 + s^2(0.0202 \times 0.0557)(1.4)^2}$$

$$= \frac{K_L(1 + 0.02s)}{1 + 0.195s + 0.0032s^2}.$$

The denominator may be factored to give, for the average coolant in the core,

$$\frac{\Delta\theta_c(s)}{\Delta P(s)} = \frac{K_L(1 + 0.02s)}{(1 + 0.173s)(1 + 0.018s)}$$

$$\approx \frac{K_L}{1 + 0.17s}.$$

b. Dynamic Coolant Void Response

The above expression for $\Delta\theta_c(s)/\Delta P(s)$ may be applied to the sodium expansion effect in the core, which is one-half the total effect. The remaining one-half of the effect comes from the coolant volume between the core and the upper plenum. The transport time through this region is

$$t_u = \frac{25.5 \times 2.54 \text{ cm}}{500 \text{ cm/sec}} = 0.13 \text{ sec, or } \tau_u \approx 0.07 \text{ sec.}$$

Then, as a first approximation, for the coolant directly above the core,

$$\frac{\Delta\theta_u(s)}{\Delta P(s)} \approx \frac{2K_L}{(1 + 0.19s)(1 + 0.07s)}.$$

c. Dynamic Fuel Expansion Response

The fuel expansion effect, which is largely due to rows 1-6, will be considered next before proceeding to the outer rows.

The expression for reactor average fuel temperature on p. 12 can be rewritten as

$$\frac{\Delta\theta_F(s)}{\Delta P(s)} = K_L \frac{4R_4 + R_1}{4R_{VR}} \cdot \frac{1 + sC_1 \dfrac{2R_1R_4}{4R_4 + R_1}}{1 + s(R_1 + 2R_4)\, C_1 + s^2 R_1 R_4 C_1^2}.$$

Substituting the values derived above and noting that the right-hand denominator is like that for $\Delta\theta_c(s)$, we obtain, for the average fuel in the core,

$$\frac{\Delta\theta_F(s)}{\Delta P(s)} = \frac{0.0639}{0.026} \cdot \frac{(1+0.014s)\, K_L}{(1+0.173s)(1+0.018s)}$$

$$\approx \frac{2.4K_L}{1 + 0.17s}.$$

2. Blanket Subassembly; Row 9

a. Dynamic Coolant Response

The response of row 9 may be obtained in the same way as for a fuel pin. The main differences are in dimensions. The length of the elements in rows 7-15 requires use of a length of 70 cm to calculate the heat transfer in place of the core length of 36 cm used above for the fuel subassemblies. The results are

$$C_1 = \pi \times \left(\frac{0.707 \times 1.25}{2}\right)^2 \times 70 \times 19.0 \times 0.038 = 30.9 \text{ cal/°C},$$

$$R_1 = \frac{\log_e (0.866/0.5)}{2\pi \times 0.082 \times 70} = 0.0145\text{°C/cal-sec}^{-1},$$

$$R_2 = \frac{\log_e (1.0/0.866)}{2\pi \times 0.082 \times 70} = 0.0039\text{°C/cal-sec}^{-1},$$

$$R_3 = 0.0145/2 + 0.0039 = 0.0112\text{°C/cal-sec}^{-1},$$

$$Q_{Element} = (36 \text{ kW}/19)(238.9 \text{ cal-sec}^{-1}/\text{kW}) = 452 \text{ cal-sec}^{-1},$$

$$\text{Average } T_{Out} = (125+145)/(2 \times 1.8) = 75\text{°C},$$

$$R_{VR} = (T_{Out}/2) \div Q_{Element} = 75/(2 \times 452) = 0.083°C/cal\text{-}sec^{-1},$$

and

$$C_{Na} = (19.1/130) \times 70 \times 0.97 \times 0.305 = 3.04 \text{ cal}/°C.$$

Again neglecting C_{Na}, we obtain

$$\frac{\Delta\theta_c(s)}{\Delta P(s)} = \frac{(R_{VR}\dot{Q}_9/45)[1 + s(0.0145 \times 30.9/2)]}{1 + s(0.0145+0.1962)(30.9) + s^2(0.0145 \times 0.0981)(30.9)^2}$$

$$= \frac{(R_{VR}\dot{Q}_9/45)(1+0.224s)}{1 + 6.53s + 1.36s^2},$$

where $(\dot{Q}_9)$ is the cal/sec output of a row 9 subassembly for a reactor equilibrium power of 45 MW. The denominator may be factored to give

$$\frac{\Delta\theta_c(s)}{\Delta P(s)} = \frac{(R_{VR}\dot{Q}_9/45)(1+0.224s)}{(1+6.2s)(1+0.22s)}$$

$$\approx \frac{R_{VR}\dot{Q}_9/45}{1 + 6.2s}.$$

This equation will be used later for row 8 structural effects, depending on heat transfer between rows 8 and 9. It will also be used for the row 9 structural effect.

3. Blanket Subassembly; Rows 10-15

a. Dynamic Coolant Response

The response of rows 10-15 is like that of row 9, except that R_{VR} is altered because the flow is reduced from 6 to 2.5 gpm, giving

$$R_{VR} = (6/2.5)(0.083) = 0.210°C/cal\text{-}sec^{-1},$$

and

$$\frac{\Delta\theta_c(s)}{\Delta P(s)} = \frac{(R_{VR}\dot{Q}_J/45)(1+0.224s)}{1 + s(0.0145+0.449)\ 30.9 + s^2(0.0145 \times 0.224)(30.9)^2}$$

$$= \frac{(R_{VR}\dot{Q}_J/45)(1+0.224s)}{1 + 14.4s + 3.11s^2}.$$

The denominator, when factored, gives

$$\frac{\Delta\theta_c(s)}{\Delta P(s)} = \frac{(R_{VR}\dot{Q}_J/45)(1+0.224s)}{(1+15.5s)(1+0.219s)}$$

$$\approx \frac{R_{VR}\dot{Q}_J/45}{1+15.5s}.$$

4. Control Rod Section L_1

The expression for $(\delta K/K)(s)/\Delta P(s)$ for Section L_1 shown on p. 11 may be written directly using the fuel subassembly dynamics already calculated:

8 Ib/in x 14 = 112

$$\tau_T = 0.63 \times 71 \text{ cm}/500 \text{ cm-sec}^{-1} = 0.09 \text{ sec}$$

$$\frac{(\delta K/K)(s)}{\Delta P(s)} = \frac{2K_L}{1+0.19s} \cdot \frac{C_{L_1}W}{1+0.09s},$$

where $(\delta K/K)(s) = \left[\frac{2K_L(.19)}{\left(\frac{1}{.19}\right)+s}\right]\left[\frac{C_1 W(.09)}{\frac{1}{.09}+s}\right]\Delta P(s)$

$$2K_L = (225°F \times 5/9)/62.5 \text{ MW} = 2.0°C/\text{MW}, \quad (1.34)$$

$$W = (\Delta K/K)/d = \frac{8 \text{ Ih/in.} \times 12 \text{ rods}}{2.54 \times 430 \text{ Ih}/0.01(\delta K/K)} \text{ (see Ref. 2)}$$

$$= 8.8 \times 10^{-4}(\delta K/K)/\text{cm} = 0.118 \text{ \$/cm},$$

.098 \$/cm for 10 control rods

and

$$C_{L_1} = \text{Length} \times \text{expansion coefficient} = L_1\alpha$$

$$= 128 \text{ cm} \times 1.8 \times 10^{-5} \text{ cm/cm°C} = 2.3 \times 10^{-3} \text{ cm/°C}.$$

5. Plenum Effect

The plenum holdup time is approximately 2.37 sec, and $\tau_p = 0.63 \times 2.37 = 1.49$ sec. Then,

$$\frac{\Delta\theta_p(s)}{\Delta P(s)} = \frac{K_p}{1+1.49s}.$$

6. Control Rod Section L_2

The quantity τ_{L2} is the time constant associated with the 0.1-cm-thick hexagonal subassembly containment shell when heated from the outside by plenum sodium with the temperature of the inner side assumed constant. It may be determined by evaluating C_s and R_s using an area of 1 cm^2. Thus,

$$C_s = \text{volume} \times \text{density} \times \text{specific heat capacity}$$

$$= 1 \times 1 \times 0.1 \times 7.7 \times 0.115 = 0.089 \text{ cal/°C},$$

$$R_s = \frac{\text{thickness}/2}{\text{conductivity} \times \text{area}}$$

$$= \frac{0.1/2}{0.048 \times 1 \times 1} = 1.04\text{°C/cal-sec}^{-1},$$

and

$$\tau_{L2} = R_s C_s = 0.089 \times 1.04 = 0.093 \text{ sec.}$$

Then,

$$\frac{(\Delta K/K)(s)}{\Delta P(s)} = \frac{K_p}{1 + 1.49s} \cdot \frac{C_{L2} W}{1 + 0.093s},$$

where

$$K_p = (183\text{°F} \times 5/9)/62.5 \text{ MW} = 1.63\text{°C/MW (see Ref. 2)},$$

and

$$C_{L2} = L_2 \alpha = 46 \text{ cm} \times 1.8 \times 10^{-5} \text{ cm/cm°C}$$

$$= 8.3 \times 10^{-4} \text{ cm/°C}.$$

7. Control Rod Section L_3

Trial calculations of the magnitudes of the inner annuli heat conductivities and capacities for Section L_3 shown in Fig. 4 showed that only R_4 and C_2 need be considered. The outer and inner diameters of the outermost stainless steel annulus are 6.35 and 2.54 cm, respectively. Hence,

$$C_2 = (\pi/4)(D_1^2 - D_2^2) \times L_3 \times 7.7 \times 0.115$$

$$= (\pi/4)(6.35^2 - 2.54^2) \times 50.8 \times 7.7 \times 0.115 = \cancel{1179} \text{ cal/°C}.$$

C_2 may be lumped at the mean diameter D_M of the annulus; thus,

$$D_M = \sqrt{\frac{D_1^2 + D_2^2}{2}} = 4.83 \text{ cm},$$

$$R_4 = \frac{\log_e (D_1/D_M)}{2\pi \times 0.048 \times L_3}$$

$$= \frac{\log_e (6.35/4.83)}{2\pi \times 0.048 \times 50.8} = 0.0178°\text{C/cal-sec}^{-1},$$

and

$$\tau_{L3} = R_4 C_2 = 1179 \times 0.0178 = 21.0 \text{ sec}.$$

Then,

$$\frac{(\delta K/K)(s)}{\Delta P(s)} = \frac{0.9K_p}{1 + 1.49s} \cdot \frac{C_{L3}W}{1 + 21.0s},$$

where

$$C_{L3} = L_3\alpha = 50.8 \times 1.8 \times 10^{-5}$$

$$= 9.14 \times 10^{-4} \text{ cm/°C}.$$

8. Control Rod Section L_4

Again as in Section 7 of this appendix, only R_4 and C_2 need be considered. The outer and inner diameters of the outermost stainless steel annulus are 6.35 and 4.45 cm, respectively.

$$C_2 = (\pi/4)(D_1^2 - D_2^2) \times L_4 \times 7.7 \times 0.115$$

$$= (\pi/4)(6.35^2 - 4.45^2) \times 50.8 \times 7.7 \times 0.115$$

$$= 725 \text{ cal/°C}$$

C_2 may be lumped at the mean diameter of the annulus, which is

$$D_M = \sqrt{\frac{D_1^2 + D_2^2}{2}} = 5.48 \text{ cm},$$

to give

$$R_4 = \frac{\log_e (6.35/5.48)}{2\pi \times 0.048 \times 50.8} = 0.0112°C/cal\text{-}sec^{-1}$$

(0.009617)

and

$$\tau_{L4} = R_4 C_2 = 725 \times 0.0112 = \cancel{8.1}\ sec.$$

6.972

Then,

$$\frac{(\delta K/K)(s)}{\Delta P(s)} = \frac{0.9K_p}{1 + 1.49s} \cdot \frac{C_{L4}W}{1 + 8.1s},$$

where

$$C_{L4} = L_4\alpha = 50.8 \times 1.8 \times 10^{-5}$$

$$= 9.14 \times 10^{-4}\ cm/°C.$$

APPENDIX B

BOW III Thermomechanical Structure Analysis

1. Theoretical Bending of Subassemblies due to Combined Nozzle, Button, and Top Loading

The structural bending of the subassemblies can be determined by treating them as lightly loaded flexible structural beams. The method by which a subassembly is supported is shown schematically at the left in Fig. B.1. Briefly, the subassembly nozzle is inserted into two grid plates containing axially aligned holes, which support the subassembly in a vertical position. Coolant hydraulic forces thrust downward to hold the subassembly against a spherical pivot support in the upper grid plate. Clearance of the nozzle in the lower plate permits some off-vertical motion, which is limited by contact between adjacent subassemblies at the buttons or at the top. The thermal bowing of the subassemblies due to radial temperature gradients, as explained in Ref. 2, causes mechanical interferences at the lower grid plate, the button, and the top levels. The subassemblies interact and flex as beams until the interference is resolved by the deflection and the balanced forces between subassemblies. The subassembly is depicted as a loaded beam at the right in Fig. B.1. The nozzle is either free or loaded radially inward or outward. The button and the top may be loaded radially either inward or outward, as shown.

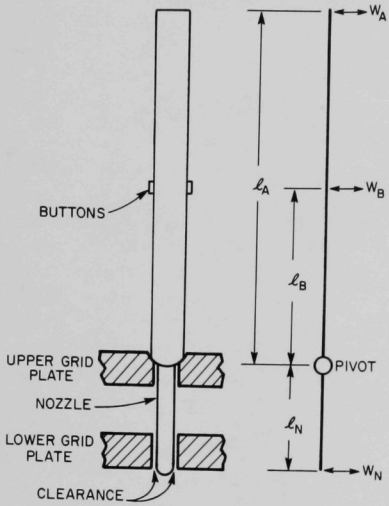

Fig. B.1. Subassembly as a Loaded Beam

Several different modes of bending can take place because of the different ways that the subassembly can be loaded. I have worked out solutions for radial button displacement in terms of top and button loads for a number of the modes that cannot make use of formulas available in the literature.[10]

Table II lists the various modes with the direction of their radial loading indicated by L or R, where L is a force directed radially outward against the subassembly and R is a force directed inward. There is no contact and therefore no force where 0 appears in the table. Interchange

of L's and R's will reverse the direction of bending but not the characteristic mode shape, which is simply a mirror image along the axis.

TABLE II. BOW III Bending Modes

Mode	Force Direction		
	Nozzle	Button	Top
II Top	R	0	R
II	R	R	0
III	R	R	R
IIIA	R	L	R
IV	0	L	R
V	L	L	R

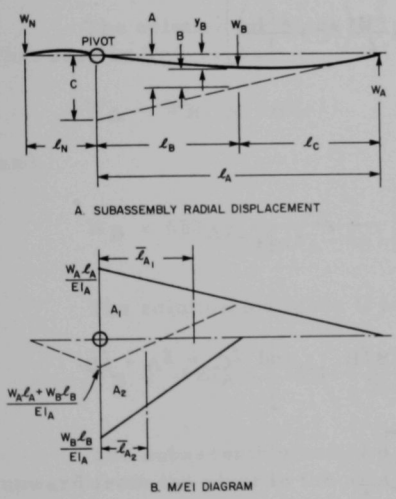

Fig. B.2. Subassembly M/EI Diagram and Radial Displacement

The solution for Mode V is worked out below. The method is general and can be applied to any flexible-beam problems of a similar nature. Figure B.2 shows the radial displacement profile for a subassembly with Mode V loading, along with the corresponding M/EI diagram. In the displacement diagram, forces directed upward are taken as positive and displacement downward is also taken as positive.

The relation between y_B and the constants of the M/EI diagram can be obtained by noting from the figure that

$$y_B = A - B = (\ell_C C/\ell_A) - B.$$

The values of B and C may be obtained by using the Second Area Moment Proposition.[11]

$$A = \frac{1}{EI_A} \cdot \frac{\ell_C}{\ell_A}(A_1 \bar{\ell}_{A_1} + A_2 \bar{\ell}_{A_2})$$

$$= \frac{1}{EI_A} \cdot \frac{\ell_C}{\ell_A}\left(W_A \ell_A \frac{\ell_A}{2} \cdot \frac{\ell_A}{3} + W_B \ell_B \frac{\ell_B}{2} \cdot \frac{\ell_B}{3}\right).$$

Similarly,

$$B = \frac{1}{EI_A}\left(W_A \ell_C \frac{\ell_C}{2} \cdot \frac{\ell_C}{3}\right).$$

Combining the above equations, we obtain

$$y_B = \frac{1}{EI_A}\left(W_A \frac{\ell_C \ell_A^3 - \ell_C^3 \ell_A}{6\ell_A} + W_B \frac{\ell_B^3 \ell_C}{6\ell_A}\right).$$

It is necessary to apply the Second Area Moment Proposition again to determine the relation between W_A and W_B in the above expression. Thus, from Fig. B.3 it can be seen that

$$F = \frac{1}{EI_A}\left(A_1 \bar{\ell}_{A_1} + A_2 \bar{\ell}_{A_2}\right)$$

$$= \frac{1}{EI_A}\left[W_A \ell_A \frac{\ell_A}{2} \cdot \frac{2\ell_A}{3} + W_B \ell_B \frac{\ell_B}{2}\left(\ell_C + \frac{2\ell_B}{3}\right)\right]$$

and

$$D = -\frac{1}{EI_N} A_3 \bar{\ell}_{A_3}$$

$$= -\frac{1}{EI_N} W_N \ell_N \frac{\ell_N}{2} \cdot \frac{2\ell_N}{3}.$$

Also,

$$D = \frac{\ell_N}{\ell_A} F, \quad W_N \ell_N = W_A \ell_A + W_B \ell_B, \quad \text{and } \ell_C = \ell_A - \ell_B.$$

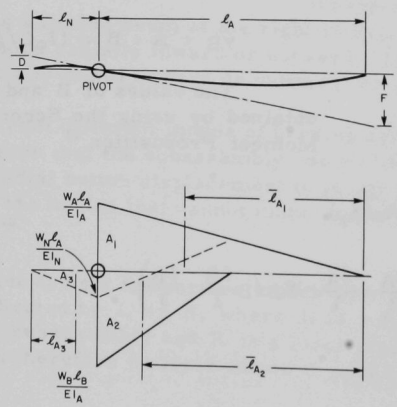

Fig. B.3

Rotation of Subassembly in Spherical Pivot Support

Substituting and solving, we obtain

$$W_A = W_B \frac{\ell_B}{\ell_A}\left[\frac{\ell_B^2 - 3\ell_B\ell_A + 2\ell_A^2}{2\ell_A^2\left(1+\frac{I_A\ell_N}{I_N\ell_A}\right)} - 1\right]$$

and

$$W_B = 6EI_A y_b \frac{\ell_A}{\ell_B^2(\ell_A - \ell_B)}\left[(2\ell_A - \ell_B)\frac{\ell_B^2 - 3\ell_B\ell_A + 2\ell_A^2}{2\ell_A^2\left(1+\frac{I_A\ell_N}{I_N\ell_A}\right)} + \ell_B\right]^{-1}.$$

Similar calculations for Modes III and IIIA result in the same solutions as those for Mode V above.

The solution for Mode IV, written in a slightly different form from that used in Ref. 11, is

$$W_A = W_B(\ell_A/\ell_B)(-1)$$

and

$$W_B = 6EI_A y_b \frac{\ell_A}{\ell_B^2(\ell_A - \ell_B)}\left[(2\ell_A - \ell_B)(-1) + \ell_B\right]^{-1}.$$

The solution for Mode II in the same form is

$$W_B = -6EI_A y_b\left[2\ell^3\left(1+\frac{I_A\ell_N}{I_N\ell_B}\right)\right]^{-1}.$$

The subassembly radial deflection (y_x) at any position (x) measured upward from the pivot in the axial direction is

$$y_x = \frac{1}{6EI_A}\left\{W_A\left[(\ell_A - x)\,\ell_A^2 - (\ell_A - x)^3\right] + W_B\left[(\ell_A - x)\frac{\ell_B^3}{\ell_A} - (\ell_B - x)^3\right]\right\}.$$

The above equation can be evaluated for a specific mode by substituting the relations for W_B and W_A developed earlier for that mode.

2. BOW III Computer Program

The FORTRAN description of the above program is given later in this appendix. It is similar to the BOW II program developed by Bump,[5] but incorporates the exact relations for the various bending modes as derived

in Part 1 of this appendix and includes an important mode ignored in BOW II. Also, D. Kucera has added stabilization to produce calculated output positions accurate to about 1 mil. Improvement to about 0.1 mil is necessary for BOW III to be useful in computing accurate dynamic movement of the subassemblies. A new approach conceiving of the subassembly array as a large group of coupled springs is under development by Kucera. This program will be known as BOW IV.

BOW III output includes an input listing as well as the output for chosen iterations. Each quantity printed is identified by its name within the code, and Table III relates program names with physical quantities.

TABLE III. BOW III FORTRAN Quantities

A. Input Quantities

MI	Number of equally spaced vertical nodes on each subassembly
MJ	Number of radial rows of subassembly
LI	Node number corresponding to button level
QQ	Initial fractional power
QD	Fractional-power increment
QT	Final fractional power
TL	Height of each subassembly (in.)
YFL1	Inmost allowed radial position for top of central subassembly
DELY	Maximum position change permitted by one iteration, at top
DL	Maximum position change permitted by one iteration, at button level
B8	Radial distance between vertical-assembly nozzle and grid-plate obstructions, inward or outward (in.)
B9	Length of nozzle (in.)
ALPHA	Coefficient of thermal expansion of buttons (in./in. °F)
D	Distance across flats of a subassembly (in.)
YR	Distance from outmost row centerline L to ring, at top level (in.)
D1	D1(1)
B1	Initial lean slope for all rows
B2	Free-swing distance at top level due to B8 clearance at nozzle
B3	B4(1) + 1
B4	B4(1)
DELT(I,J)	Full-power temperature differential across row J at node I level (°F at 45 MW)
YP(J)	Centerline radial position of row J
B4(J)	$I_A \ell_N / I_N \ell_A$ for row J
B5(J)	$3EI_A F(J)/\ell_A^3$ for row J

TABLE III (Contd.)

B6(J)	Input as $3EI_AF(J)$, printed as $\frac{3EI_AF(J)}{\ell_B^2(\ell_A - \ell_B)^2}$ for row J
D1(J)	Material thickness between centerlines of rows J and J + 1, at top level
DD1(J)	Initial material thickness between centerlines of rows J and J + 1, at button level
F(J)	The number of subassemblies in row J
T(J)	Full-power temperature difference between pivot and top level, for row J (°F at 45 MW)
F1(J)	Single-button squashing factor for row J (in./lb)

B. Output Quantities

YT(I,J)	Thermal deflection at node I of row J, for the power level whose iteration values follow
M	Iteration number
Q	Fractional power
Y(I,J)	Radial position of node I of row J
MODE(J)	Most severe beam-bending formula-type required to fit row J into its constraint positions
ZF(J)	Effective maximum motion at top-level for row J
YFR(J)	Top-level constraint location on outside of row J
YFL(J)	Top-level constraint location on inside of row J
ZL(J)	Effective maximum motion at button level for row J
YFLR(J)	Button-level constraint location on outside of row J
YFLL(J)	Button-level constraint location on inside of row J
PL(J)	Load exerted on top level of row J from inside
PR(J)	Load exerted on top level of row J from outside
WL(J)	Load exerted on button level of row J from inside
WR(J)	Load exerted on button level of row J from outside
DD(J)	Button-level material thickness between row J and row J + 1 centerlines at fractional power Q

Some of the input quantities in this table are illustrated in Fig. B.4 with the radial scale greatly enlarged for clarity. Thus, ℓ_A is typically 65 in., and B8 is 4×10^{-3} in. The method of summing DD1(J) and D1(J) between rows J and J + 1 is shown.

All doubly dimensioned arrays are printed so that row number increases with downward motion through each column and node number increases with rightward motion across each column. Thus, values for the top nodes of each row appear in the outermost column.

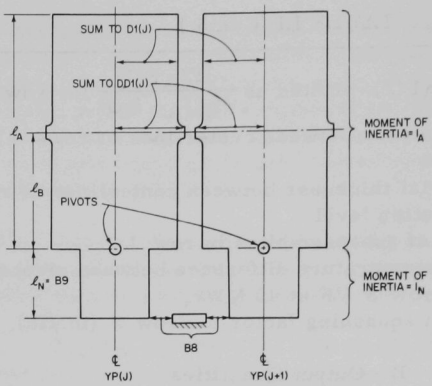

Fig. B.4

BOW III Module

3. Calculation of Input Quantities

a. Button Stiffness

The button stiffness can be obtained by assuming a concentrated load on a long, flat, rectangular plate with fixed edges.

Then,

$$\Delta_b = 0.00725\ Pa^2/D \text{ (see Ref. 12)},$$

where

Δ_b = deflection at load (in.),

P = load (lb),

a = width of flat = 1.30 in.,

D = flexural rigidity = 130 lb-in. (see Ref. 12),

and

$E = 24.25 \times 10^6$ lb/in.^{2} for 304 SS.

Therefore,

$$\Delta_b/P = 0.00725 \times 1.3^2/130 = 1 \times 10^{-4} \text{ mil/lb}.$$

Because of the hexagonal configuration of buttons, the effective stiffness per button per subassembly is 1.5 times as much as the actual stiffness.

Thus,

$$(\Delta_b/P)_{eff} = 1 \times 10^{-4}/1.5 = 0.7 \times 10^{-5} \text{ mil/lb},$$

and

$$F_1(J) = 2(\Delta_b/P)_{eff} = 1.4 \times 10^{-4} \text{ mil/lb}.$$

The above value was used for rows 1-6. Rows 7-15 were assigned a value one-tenth that of $F_1(J)$, or 1.4×10^{-5} mil/lb, because the hexagonal can is supported immediately under the button by the rigid elements contained in the can, and therefore its flexure is greatly reduced.

b. Moment-of-inertia Calculations for Nozzles and Upper Parts of Subassemblies

The nozzles for rows 1-6 are all similar. Their moment of inertia is[13]

$$I_{N,(1-6)} = 0.049(D^4 - d^4) = 0.049(1.683^4 - 1.433^4) = 0.187 \text{ in.}^4.$$

The nozzles for rows 7-15 are similar, and their moment of inertia is

$$I_{N,(7-15)} = 0.049(1.468^4 - 1.068^4) = 0.164 \text{ in.}^4.$$

The hexagonal cans for rows 1-6 and 9-15 will determine the moment of inertia of the portion of the subassembly between the pivot and the top. The hexagon can be calculated, since it has a thin wall, by assigning it an average outside diameter of 2.450 in. The wall thickness of 0.040 in. leads to an inside diameter of 2.370 in.

Then

$$I_{A,(1-6,9-15)} = 0.049(2.450^4 - 2.370^4) = 0.218 \text{ in.}^4.$$

For the stainless steel reflector rows 7 and 8 used in Run 26, the stiffness of the upper part of the subassembly above the pivot is increased by the 19 full-length 0.493-in.-diam rods contained in each subassembly. (Such is not the case in rows 9-15, where the elements are made up of stacked short lengths, which are free to flex.)

Then,

$$I_{A,(7-8)} = 0.049(2.450^4 - 2.370^4) + 19[0.049(0.493^4)]$$

$$= 0.275 \text{ in.}^4 \quad \text{(elements free to slip);}$$

$$I_{A,(7-8)} = 0.22 + 5 \times 0.049(0.493)^4 + (8 \times \pi \times 0.493^2/4)(0.493 \times 0.866)^2$$

$$+ (6 \times \pi \times 0.493^2/4)(0.493 \times 0.866 \times 2)^2$$

$$= 1.35 \quad \text{(elements unable to slip).}$$

Since some slippage may occur, the following average value was assumed:

$$I_{A,(7-8)} = 0.77 \quad \text{(partial slippage).}$$

Such partial slippage could account for the apparent hysteresis in the EBR-II feedback reactivity, which assumes two values depending upon the direction of power change.

The remaining inputs are combinations of moments of inertia, lengths, numbers of subassemblies per row, and mechanical properties of the materials, all of which are specified in the sample run. The differential temperature profiles for run No. 26B calculated by R. Cushman are used for the input (DELT).

4. BOW III Sample Run

The printed output included on pages 41-59 is that for the computer run that produced the curve plotted in Fig. 7. The data for the curve appear in the last column of Table IV, which is the sum of the reactivity changes in inhours due to rows 6-9. The row displacement from its zero-power position at the button level is represented by d_6, d_7, etc., in mils. It is obtained from the printed output by subtracting Y (in column 5) for a subassembly row from that row's YP. The reactivity due to the row displacement is obtained by multiplying d by the row reactivity constant (ρ), which has the units of inhours/mil. The calculated values for ρ_6, ρ_7, ρ_8, and ρ_9 are -1.806, -0.989, -0.500, and -0.289, respectively, for the EBR-II run No. 26B configuration. As power is increased from zero to 45 MW, rows 6 and 7 move steadily toward the core center and rows 8 and 9 move away from the center. The combined effect is to increase reactivity as power is increased, yielding positive feedback.

TABLE IV. Reactivity Evaluation of Sample Output

Q, P/45 MW	Row 6		Row 7		Row 8		Row 9		Total, Ih
	d_6	$\rho_6 d_6$	d_7	$\rho_7 d_7$	d_8	$\rho_8 d_8$	d_9	$\rho_9 d_9$	
0.1	0.09	-0.16	0.46	0.45	0.6	-3.0	0.45	-0.13	-0.14
0.2	5.52	9.97	7.68	7.60	7.42	-3.71	5.08	-1.47	12.25
0.3	11.5	20.77	13.53	13.38	11.30	-5.65	9.04	-2.61	25.89
0.4	14.4	25.54	13.61	13.46	17.88	-8.92	15.66	-4.53	25.55
0.5	17.25	31.15	19.25	19.04	20.95	-10.48	18.85	-5.45	34.26
0.6	19.68	35.54	21.72	21.48	25.73	-12.87	23.71	-6.85	37.30
0.7	22.42	40.49	24.53	24.26	28.66	-14.33	26.73	-7.72	42.70
0.8	24.18	43.67	26.30	26.01	34.82	-17.41	32.97	-9.53	42.74
0.9	26.32	49.53	28.56	28.25	37.02	-18.51	35.25	-10.19	47.08
1.0	28.35	51.20	30.75	30.41	38.45	-19.23	36.76	-10.62	51.76

```
      PROGRAM BOW III
      DIMENSION DELT(20,20),YP(20),B1(20),D1(20),B3(20),B4(20),B5(20),
     1 B6(20),Y(20,20),YI(20,20),YT(20,20),YFR(20),YFL(20),PL(20),
     2 PR(20),XDELT(20,20),YY(20),AY(20,20),DD1(20),WR(20),WL(20),
     3 F(20),DD(20),T(20),F1(20),A6(20),A7(20),YFLL(20),YFLR(20),
     4 YZ(20),MA(30),YPT(20,20),B35(20),XX(20),APL(20),APR(20),
     5 AWL(20),AWR(20),PLB(20),PRB(20),WLB(20),WRB(20),B3L(20),B4L(20),
     6 B7(20),B36(20),B35L(20),GL(20),HL(20),PRP(20),PLP(20),ZF(20),
     7 ZL(20),MODE(20),B37(20),B38(20),B39(20),B40(20)
      TYPE DOUBLE B3,B4,B5,B6,Y,YFR,YFL,PL,PR,YY,AY,WR,WL,DD,A6,A7,
     1 YFLL,YFLR,YZ,B35,XX,APL,APR,AWL,AWR,PLB,PRB,WLB,WRB,B3L,B4L,B7,
     2 B36,B35L,GL,HL,PRP,PLP,ZF,ZL,B37,B38,B39,B40,B5L,CL,P,C1,C2,C3,
     3 C4,PD,DS,DM,DNOZ,PP,C3M,WB,WA,C2M,YW,C4M
      READ1000,MI,MJ,LI,QQ,QD,QT,TL,YFL1,DELY
      READ 5041,MT,DL,B8,B9,B11
 5041 FORMAT(1I6,7E10.4)
      READ 5040,(MA(N),N=1,MT)
 5040 FORMAT(20I4)
       READ 2000,ALPHA
      READ2000,((DELT (I,J),I=1,MI),J=1,MJ)
       READ 2000,D
      READ2000,(YP(J),J=1,MJ)
       READ 2000,YR
      READ2000,(D1(J),J=1,MJ)
      READ2000,(B1(J),J=1,MJ)
       READ 2000,B2
      READ2000,(B4(J),J=1,MJ)
      READ2000,(B5(J),J=1,MJ)
      READ2000,(B6(J),J=1,MJ)
      READ2000,(DD1(J),J=1,MJ)
      READ2000,(F(J),J=1,MJ)
      READ2000,(T(J),J=1,MJ)
      READ2000,(F1(J),J=1,MJ)
 1000 FORMAT(3I6 ,6E10.4)
 2000 FORMAT(8E10.4)
      PRINT5000
 5000 FORMAT(6X,2HMI,6X,2HMJ,6X,2HLI,6X,2HQQ,10X,2HQD,10X,2HQT,10X,2HTL,
     18 X,4HYFL1,8 X,4HDELY,10X,2HDL)
      PRINT 5010,MI,MJ,LI,QQ,QD,QT,TL,YFL1,DELY,DL
 5010 FORMAT(3I8,8E12.4)
      PRINT 5042,B8,B9
 5042 FORMAT(6H B8,B9,6X,9E12.4)
      MK=MJ-1
      XMI=MI
      DELX=TL/XMI
      XLI=LI
      A4=XLI*DELX
      A42=A4**2
      A2=TL-A4
      A5=A2**2
       E2=TL/(A42*A5)
      A10=3.*XMI-XLI
      A15=XMI-XLI
      A11=3.*(XMI**2)*A15
      A12=(DELX/XMI)**3/12.
      A17=2.*(XMI**3)
```

```
      A18=A12*(XLI**2)
       A20=2.*XMI-XLI
      DO240 I=1,MI
      XI=I
      XX(I)=(1.5*(XMI/XI)-.5)*((XI/XMI)**2)
      A1=XI*DELX
      A3=TL-A1
      A32=A3**2
      A8=2.*TL
      A6(I)=   A1*(A8*A3-A5-A32)/(2.*A42*A2)
      GL(I)=((XI/XLI)**2)*(1.5*(XLI/XI)-.5)
      HL(I)=(XI-XLI)/XLI
       B38(I)=XI*(XMI-XI)*(2.*XMI-XI)
       IF(I.GT.LI) GO TO 239
       B39(I)=XI*(XI**2-3.*XLI*XI+XLI**2*(3.-XLI/XMI))
       GO TO 240
  239  B39(I)=XLI**3*(XMI-XI)/XMI
240   A7(I)=   A3*(A8*A2-A5-A32)/(2.*A4*A5)
      DO71 J=1,MJ
      B3(J)=B4(J)+1.
      B35(J)=B5(J)/B3(J)
      B4L(J)=B4(J)*XMI/XLI
      B3L(J)=B4L(J)+1.
      B5L=B5(J)*((XMI/XLI)**3)
      B35L(J)=B5L/B3L(J)
      B6(J)=B6(J)*E2
       B37(J)=A20*A15*.5/(B3(J)*XMI**2) -1.
       B36(J)=2.*B6(J)*A15/(A20*B37(J)+XLI)
       B37(J)=B37(J)*XLI/XMI
   71  B40(J)=XLI*A15*(B37(J)*A20+XLI**2/XMI)
      PRINT5001
5001  FORMAT(5X,5HALPHA,7X,1HD,11X,2HYR,10X,2HD1,10X,2HB1,10X,2HB2,10X,
     12HB3,10X,2HB4)
      PRINT5011,ALPHA      ,D      ,YR    ,D1(1),B1(1),B2    ,B3(1),B4(1)
5011  FORMAT(10E12.4)
      PRINT 5002,((DELT(I,J),I=1,MI),J=1,MJ)
5002  FORMAT(5H DELT,5X,10E11.4)
      PRINT 5003,(YP(J),J=1,MJ)
5003  FORMAT(3H YP,7X,10E11.4)
      PRINT 5039,(B4(J),J=1,MJ)
5039  FORMAT (3H B4,7X,10E11.4)
      PRINT 5004,(B5(J),J=1,MJ)
5004  FORMAT(3H B5,7X,10E11.4)
      PRINT 5025,(B6(J),J=1,MJ)
5025  FORMAT(3H B6,7X,10E11.4)
      PRINT5035,(D1(J),J=1,MJ)
5035  FORMAT(3H D1,7X,10E11.4)
      PRINT 5027,(DD1(J),J=1,MJ)
5027  FORMAT(4H DD1,6X,10E11.4)
      PRINT 5028,(F(J),J=1,MJ)
5028  FORMAT(2H F,8X,10E11.4)
      PRINT 5029,(T(J),J=1,MJ)
5029  FORMAT(2H T,8X,10E11.4)
      PRINT 5030,(F1(J),J=1,MJ)
5030  FORMAT(3H F1,7X,10E11.4)
      DO80 J=1,MJ
```

```
      DO8C I=1,MI
      XI=I
80    YI(I,J)=YP(J)+B1(J)*DELX*XI
      C=QC
      GOTC 60
1     ASSIGN 304 TC MM
      GOTC 305
304   Q=Q+QD
      IF(C-QT)60,6C,61
61    STOP
6C    DO50 J=1,MJ
       ZF(J)=DELY
       ZL(J)=DL
       DD(J)=DD1(J)*(1.+ALPHA*T(J)*Q)
      DO5C I=1,MI
50    XDELT(I,J)=Q*DELT(I,J)
      M=M-M
      K=1
       DO 15 J=1,MJ
      SUM=0.
      SUM2=0.
       DO 15 I=1,MI
       TERM=ALPHA*XDELT(I,J)*DELX/D
      SUM=SUM+TERM
      TERM2=(SUM-TERM/2.)*DELX
      SUM2=SUM2+TERM2
   15 YT(I,J)=SUM2
      DO635 J=1,MJ
      DO635 I=1,MI
635   YPT(I,J)=YI(I,J)+YT(I,J)
      PRINT 5043,((YT(I,J),I=1,MI),J=1,MJ)
5043  FORMAT (3H YT,7X,10E11.4)
      DO19 J=1,MK
19    YFR(J)=YP(J+1)-D1(J)
      YFR(MJ)=YP(MJ)+YR     +Q*B11
      DO18 J=2,MJ
18    YFL(J)=YP (J-1)+D1(J-1)
      YFL(1)=YFL1
      DO551 J=1,MK
551   YFLR(J)=YP(J+1)-DD1(J)
      YFLR(MJ)=YP(MJ)+1.
      DO552 J=2,MJ
552   YFLL(J)=YP(J-1)+DD1(J-1)
      YFLL(1)=0.
125   M=M+1
      IF(M-MA(MT))103,103,304
C
C        FIT TOP-LEVEL CONSTRAINTS
C
  103 DO 607 J=1,MJ
      MSC=0
      PR(J)=PL(J)=0.
      IF(YFR(J).LT.YFL(J)) GO TO 612
      IF(YPT(MI,J).GE.YFL(J)) GO TO 6C9
      CL=YFL(J)-YPT(MI,J)
      GO TO 613
```

```
  609  IF(YPT(MI,J).GT.YFR(J)) GO TO 611
       DO 610 I=1,MI
  610  AY(I,J)=YPT(I,J)
       GO TO 618
  611  CL=YFR(J)-YPT(MI,J)
       GO TO 613
  612  CL=.5*(YFL(J)+YFR(J))-YPT(MI,J)
       MSQ=1
  613  SGN=1.
       IF(CL.LT.0.) SGN=-1.
       B2S=B2-SGN*TL*B1(J)
C
C        MODE 1
C
       C1=CL $ ASSIGN 618 TO M1
       IF(ABSF(CL).LE.B2S) GO TO 614
       C1=SGN*B2S $ ASSIGN 616 TO M1
  614  DO 615 I=1,MI
       XI=I
  615  AY(I,J)=YPT(I,J)+C1*XI/XMI
       C2=CL-C1
       GO TO M1
C
C        MODE 2
C
  616  DO 617 I=1,MI
       XI=I
  617  AY(I,J)=AY(I,J)+C2*(B4(J)+XX(I))*XI/(XMI*B3(J))
       P=-C2*B35(J)
       IF(SGN.LT.0.) PR(J)=P
       IF(SGN.GT.0.) PL(J)=P
  618  PLP(J)=PL(J)
       PRP(J)=PR(J)
C
C        SQUASHING
C
       IF(MSQ.EQ.0) GO TO 607
       PD=(YFL(J)-YFR(J))*F(J)/F1(J)
       PL(J)=PL(J)-PD
       PR(J)=PR(J)+PD
  607  CONTINUE
      DO241 J=1,MJ
      WL(J)=0.
241   WR(J)=0.
C
C        SUPERIMPOSE BUTTON-LEVEL CONSTRAINTS
C
       DO 900 J=1,MJ
       MODE(J)=0 $ MSQ=0
       IF(YFLR(J).LT.YFLL(J)) GO TO 902
       IF(AY(LI,J).GE.YFLL(J)) GO TO 901
       CL=YFLL(J)-AY(LI,J)
       GO TO 903
  901  IF(AY(LI,J).LE.YFLR(J)) GO TO 900
       CL=YFLR(J)-AY(LI,J)
       GO TO 903
```

```
  902  CL=.5*(YFLL(J)+YFLR(J))-AY(LI,J)
       MSC=1
  903  YFF=YFR(J) $ SGN=1.
       IF(CL.GT.0.) GO TO 904
        YFF=YFL(J) $ SGN=-1.
C        CHOOSE INITIAL MODE
  904  IF(YFR(J).LT.YFL(J)) YFF=AY(MI,J)
       IF(PLP(J).NE.PRP(J)) GO TO 908
C
C        MODE 1
C
       MODE(J)=1
       DS=A4/B9*(SGN*B8+B9*(4.*AY(1,J)-AY(2,J)-3.*YP(J))/(2.*DELX))
       DM=A4/TL*(YFF-AY(MI,J))
       IF(ABSF(DM).LT.ABSF(DS)) GO TO 905
C        1 TO 2
       C1=DS
       ASSIGN 916 TO M1
       GO TO 906
C        1 TO 4
  905  C1=DM
       DNCZ=-B9*(DS-DM)/A4
       ASSIGN 922 TO M1
  906  IF(ABSF(C1).LT.ABSF(CL)) GO TO 912
       C1=CL $ ASSIGN 931 TO M1
  912  DO 907 I=1,MI
       XI=I
  907  AY(I,J)=AY(I,J)+C1*XI/XLI
       CL=CL-C1
       GO TO M1
C
C        MODES 3 AND 3A
C
  908  IF(PLP(J).EQ.0.) GO TO 909
       PP=PLP(J)
       IF(CL) 911,900,910
  909  PP=PRP(J)
       IF(CL) 910,900,911
C        MODE 3
  910  MODE(J)=3
       C3M=-PP/(B36(J)*B37(J))
       IF(ABSF(C3M).GE.ABSF(CL)) GO TO 914
       C3=C3M
       ASSIGN 916 TO M3
       GO TO 915
C        MODE 3A
  911  MODE(J)=30
       C3M=-PP/(B36(J)*(B37(J)+XLI/XMI))
       IF(ABSF(C3M).GE.ABSF(CL)) GO TO 914
       C3=C3M
       ASSIGN 922 TO M3
       DNCZ=-SGN*2.*B8
       GO TO 915
C        MODES 3,3A
  914  C3=CL
       ASSIGN 931 TO M3
```

```
  915  DO 932 I=1,MI
  932  AY(I,J)=AY(I,J)+C3*(B37(J)*B38(I)+B39(I))/B40(J)
       WB=C3*B36(J)
       WA=WB*B37(J)
       IF(CL.LT.0.) WR(J)=WB
       IF(CL.GT.0.) WL(J)=WB
       IF(PP.LT.0.) PL(J)=PL(J)+WA
       IF(PP.GT.0.) PR(J)=PR(J)+WA
       CL=CL-C3
       GO TO M3
C
C        MODE 2
C
  916  MODE(J)=2
       C2M=(YFF-AY(MI,J))/(1.+HL(MI)*(1.5+B4L(J))/B3L(J))
       IF(ABSF(C2M).GE.ABSF(CL)) GO TO 917
       C2=C2M
       ASSIGN 929 TO M2
       GO TO 918
  917  C2=CL
       ASSIGN 931 TO M2
  918  DO 919 I=1,MI
       XI=I
       IF(I.GT.LI) GO TO 920
       YW=C2*(B4L(J)+GL(I))*XI/(XLI*B3L(J))
       GO TO 919
  920  YW=C2*(1.+(1.5+B4L(J))*HL(I)/B3L(J))
  919  AY(I,J)=AY(I,J)+YW
       WB=-B35L(J)*C2
       IF(CL.LT.0.) WR(J)=WR(J)+WB
       IF(CL.GT.0.) WL(J)=WL(J)+WB
       CL=CL-C2
       GO TO M2
C
C        MODE 4
C
  922  MODE(J)=4
       C4M=-DNOZ*2.*XLI*A2/(B9*A20)
       IF(ABSF(C4M).GE.ABSF(CL)) GO TO 923
       C4=C4M
       ASSIGN 929 TO M4
       GO TO 924
  923  C4=CL
       ASSIGN 931 TO M4
  924  DO 926 I=1,MI
       IF(I.GT.LI) GO TO 925
       YW=C4*A6(I)
       GO TO 926
  925  YW=C4*A7(I)
  926  AY(I,J)=AY(I,J)+YW
       WB=-C4*B6(J)
       WA=-WB*XLI/XMI
       IF(CL.LT.0.) GO TO 927
       WL(J)=WL(J)+WB
       PR(J)=PR(J)+WA
       GO TO 928
```

```
  927  WR(J)=WR(J)+WB
       PL(J)=PL(J)+WA
  928  CL=CL-C4
C
C        MCDE 5
C
  929  MCDE(J)=5
       WB=CL*B36(J)
       WA=WB*B37(J)
       DO 933 I=1,MI
  933  AY(I,J)=AY(I,J)+CL*(B37(J)*B38(I)+B39(I))/B40(J)
       IF(CL.LT.C.) GC TO 930
       WL(J)=WL(J)+WB
       PR(J)=PR(J)+WA
       GO TO 931
  930  WR(J)=WR(J)+WB
       PL(J)=PL(J)+WA
C
C        BUTTON-LEVEL SQUASHING
C
  931  IF(MSC.EQ.C) GC TO 900
       MCDE(J)=-MCDE(J)
       CM=YFLR(J)-YFLL(J)
       WL(J)=WL(J)+CM*(F(J)-3.)/F1(J)
       WR(J)=WR(J)-CM*(F(J)+3.)/F1(J)
  900  CONTINUE
       DO572 N=1,MT
       IF(M-MA(N))572,320,572
 572   CONTINUE
       GOTC 3C3
 320   ASSIGN 303 TC MM
 305   PRINT 5023,M,Q
 5023  FORMAT(4H M,Q,1I6,1E12.4)
       PRINT 5005,((AY(I,J),I=1,MI),J=1,MJ)
 5005  FORMAT(2H Y,8X,10F11.5)
       PRINT 5006,(MODE(I),I=1,MJ)
 5006  FORMAT(5H MCDE20I4)
       PRINT 5024,(ZF(J),J=1,MJ)
 5024  FORMAT(* ZF*7X,10E11.4)
       PRINT 5008,(YFR(J),J=1,MJ)
 5008  FORMAT(4H YFR,6X,10F11.5)
       PRINT 5009,(YFL(J),J=1,MJ)
 5009  FORMAT(4H YFL,6X,10F11.5)
       PRINT 5026,(ZL(J),J=1,MJ)
 5026  FORMAT(* ZL*7X,10E11.4)
       PRINT5036,(YFLR(J),J=1,MJ)
 5036  FORMAT(5H YFLR,5X,10F11.5)
       PRINT 5037,(YFLL(J),J=1,MJ)
 5037  FORMAT(5H YFLL,5X,10F11.5)
 306   PRINT 5021,(PL(J),J=1,MJ)
 5021  FORMAT(3H PL,7X,10E11.4)
       PRINT 5022,(PR(J),J=1,MJ)
 5022  FORMAT(3H PR,7X,10E11.4)
       PRINT 5032,(WL(J),J=1,MJ)
 5032  FORMAT(3H,WL,7X,10E11.4)
       PRINT 5031,(WR(J),J=1,MJ)
```

```
5031  FORMAT(3H WR,7X,10E11.4)
      PRINT 5033,(CD(J),J=1,MJ)
5033  FORMAT(3H DC,7X,10E11.4)
      GOTC MM
  303  DC 107 J=1,MJ
       IF(ABSF(AY(LI,J)-Y(LI,J)).GT.1.E-5) GO TO 119
  107  CONTINUE
       GO TC 1
  119  IF(K.GT.1) GO TO 131
       DO 132 J=1,MJ
      PLB(J)=PL(J)
      PRB(J)=PR(J)
132   YY(J)=AY(MI,J)
       GO TO 133
  131  DO 102 J=1,MJ
       PLB(J)=(PL(J)+APL(J))/2.
       PRB(J)=(PR(J)+APR(J))/2.
  102  YY(J)=(Y(MI,J)+AY(MI,J))/2.
133   DO 701 J=2,MJ
      PMAX=(-PLB(J)+PRB(J))/2.
       IF(PMAX.EQ.C.) PMAX=.1
       P=PRB(J)+PLB(J+1)
       IF(J.EQ.MJ) P=C.
       DEL=(PLB(J)+PRB(J-1)+P)/PMAX
       IF(DEL.EQ.C.) GO TO 701
       FAC=1.
       IF(DEL/ZF(J).LT.0.) FAC=-.8
       ZF(J)=FAC*ZF(J)
       DELF=ZF(J)
       DELA=ABSF(DEL)
       IF(DELA.LT.1.) DELF=DELA*DELF
      YY(J)=YY(J)+DELF
7C1   CCNTINUE
  750  IF(YY(MJ).GT.YFR(MJ)) YY(MJ)=YFR(MJ)
      DO1CO J=1,MK
1CO   YFR(J)=YY(J+1)-D1(J)
      DO1C1 J=2,MJ
1C1   YFL(J)=YY(J-1)+D1(J-1)
       IF(K.GT.1) GC TO 559
      DO56C J=1,MJ
      WLB(J)=WL(J)
      WRB(J)=WR(J)
56C   YZ(J)=AY(LI,J)
       GO TO 561
  559  DO 562 J=1,MJ
       WLB(J)=(WL(J)+AWL(J))/2.
       WRB(J)=(WR(J)+AWR(J))/2.
  562  YZ(J)=(Y(LI,J)+AY(LI,J))/2.
561   DO 8C1 J=2,MJ
      WMAX=(-WLB(J)+WRB(J))/2.
       IF(WMAX.EQ.C.) WMAX=.1
       W=WRB(J)+WLB(J+1)
       IF(J.EQ.MJ) W=C.
       DEL=(WLB(J)+WRB(J-1)+W)/WMAX
       IF(DEL.EQ.C.) GO TC 801
       FAC=1.
```

```
      IF(DEL/ZL(J).LT.0.) FAC=-.8
      ZL(J)=FAC*ZL(J)
      DELF=ZL(J)
      DELA=ABSF(DEL)
      IF(DELA.LT.1.) DELF=DELA*DELF
     YZ(J)=YZ(J)+DELF
8C1  CONTINUE
  832 IF(YZ(MJ).GT.YFLR(MJ)) YZ(MJ)=YFLR(MJ)
      DD(1)=DD1(1)*(1.+ALPHA*Q*T(1))+WLB(2)*F1(1)/6.
     DO547 J=1,MK
547  YFLR(J)=YZ(J+1)-DD(J)
     DO548 J=2,MJ
548  YFLL(J)=YZ(J-1)+DD(J-1)
     K=2
      IF(YFR(1).LT.YFL(1)) YFR(1)=YFL(1)
      IF(YFLR(1).LT.YFLL(1)) YFLR(1)=YFLL(1)
      IF(YFL(MJ).GT.YFR(MJ)) YFL(MJ)=YFR(MJ)
      IF(YFLL(MJ).GT.YFLR(MJ)) YFLL(MJ)=YFLR(MJ)
     DO110 J=1,MJ
     APL(J)=PL(J)
     APR(J)=PR(J)
     AWL(J)=WL(J)
     AWR(J)=WR(J)
     DO110 I=1,MI
110  Y(I,J)=AY(I,J)
     GOTO 125
     END
```

```
      MI       MJ       LI       QQ          QD          QT          TL         YFL1        DELY          DL
      10       15        5  1.0000-001  1.0000-001  1.1000+000  6.5000+001 -0.0000+000  3.0000-003  2.0000-003
B8,B9          4.0000-003  2.0000+001
    ALPHA        C          YR          D1          B1          B2          B3          B4
 1.0000-005  2.4600+000  9.5000-002  2.1910+000 -0.0000+000  1.3000-002  1.2400+000  2.4000-001
DELT      -0.0000+000-0.0000+000-0.0000+000-0.0000+000-0.0000+000-0.0000+000-0.0000+000-0.0000+000-0.0000+000-0.0000+000
DELT      -0.0000+000-0.0000+000-0.0000+000-0.0000+000 9.0000+000 2.3000+001 1.7000+001-0.0000+000-0.0000+000-0.0000+000
DELT      -0.0000+000-0.0000+000-0.0000+000-0.0000+000 1.0000+001 2.5000+001 1.9000+001-0.0000+000-0.0000+000-0.0000+000
DELT      -0.0000+000-0.0000+000-0.0000+000-0.0000+000 1.2000+001 2.9000+001 2.2000+001-0.0000+000-0.0000+000-0.0000+000
DELT      -0.0000+000-0.0000+000-0.0000+000-0.0000+000 1.2000+001 2.9000+001 2.2000+001-0.0000+000-0.0000+000-0.0000+000
DELT      -0.0000+000-0.0000+000-0.0000+000-0.0000+000 1.0000+001 2.4000+001 1.8000+001-0.0000+000-0.0000+000-0.0000+000
DELT      -0.0000+000-0.0000+000-0.0000+000 4.0000+000 2.0000+001 4.8000+001 7.4000+001 9.0000+001 9.2000+001 9.5000+001
DELT      -0.0000+000-0.0000+000-0.0000+000-0.0000+000-1.5000+001-3.5000+001-5.3000+001-6.6000+001-6.6000+001-6.6000+001
DELT      -0.0000+000-0.0000+000 3.0000+000 9.0000+000 1.0000+001 7.0000+000-3.0000+000-1.4000+001-1.8000+001-1.8000+001
DELT      -0.0000+000-0.0000+000 4.0000+000 9.0000+000 3.0000+001 5.8000+001 7.2000+001 7.4000+001 7.6000+001 7.8000+001
DELT      -0.0000+000-0.0000+000 3.0000+000 5.0000+000 2.0000+001 4.4000+001 5.2000+001 4.5000+001 3.8000+001 3.2000+001
DELT      -0.0000+000-0.0000+000-0.0000+000-0.0000+000 8.0000+000 2.0000+001 2.5000+001 2.3000+001 2.0000+001 1.8000+001
DELT      -0.0000+000-0.0000+000-0.0000+000-0.0000+000-0.0000+000-0.0000+000-0.0000+000-0.0000+000-0.0000+000-0.0000+000
DELT      -0.0000+000-0.0000+000-0.0000+000-0.0000+000-0.0000+000-0.0000+000-0.0000+000-0.0000+000-0.0000+000-0.0000+000
DELT      -0.0000+000-0.0000+000-0.0000+000-0.0000+000-0.0000+000-0.0000+000-0.0000+000-0.0000+000-0.0000+000-0.0000+000
YP        -0.0000+000 2.2200+000 4.2600+000 6.3600+000 8.4600+000 1.0570+001 1.2680+001 1.4780+001 1.6890+001 1.8990+001
YP         2.1100+001 2.3220+001 2.5340+001 2.7450+001 2.9550+001
B4         2.4000-001 2.4000-001 2.4000-001 2.4000-001 2.4000-001 2.4000-001 1.4000+000 1.4000+000 4.2000-001 4.2000-001
B4         4.2000-001 4.2000-001 4.2000-001 4.2000-001 4.2000-001
B5         6.0500+001 3.6300+002 7.2600+002 1.0900+003 1.4520+003 1.8170+003 7.2970+003 8.5130+003 2.9030+003 3.2650+003
B5         3.6300+003 3.9950+003 4.3600+003 4.7100+003 5.4500+003
B6         9.7005+002 5.8261+003 1.1652+004 1.7478+004 2.3305+004 2.9131+004 1.1711+005 1.3662+005 4.6609+004 5.2435+004
B6         5.8261+004 6.4087+004 6.9914+004 7.5740+004 8.7392+004
D1         2.1910+000 2.0140+000 2.0730+000 2.0730+000 2.0830+000 2.0830+000 2.0730+000 2.0830+000 2.0730+000 2.0830+000
D1         2.0930+000 2.0930+000 2.0830+000 2.0730+000-0.0000+000
DD1        2.2175+000 2.0375+000 2.0975+000 2.0975+000 2.1075+000 2.1075+000 2.0975+000 2.1075+000 2.0975+000 2.1075+000
DD1        2.1175+000 2.1175+000 2.1075+000 2.0975+000-0.0000+000
F          1.0000+000 6.0000+000 1.2000+001 1.8000+001 2.4000+001 3.0000+001 3.6000+001 4.2000+001 4.8000+001 5.4000+001
F          6.0000+001 6.6000+001 7.2000+001 7.8000+001 9.0000+001
T          7.9000+001 7.9000+001 8.1000+001 9.5000+001 9.4000+001 7.9000+001 6.2000+001 3.7000+001 6.7000+001 5.0000+001
T         -0.0000+000-0.0000+000-0.0000+000-0.0000+000-0.0000+000-0.0000+000
F1         1.4400-004 1.4400-004 1.4400-004 1.4400-004 1.4400-004 1.4400-004 1.4400-005 1.4400-005 1.4400-005 1.4400-005
F1         1.4400-005 1.4400-005 1.4400-005 1.4400-005 1.4400-005
YT         0.0000+000 0.0000+000 0.0000+000 0.0000+000 0.0000+000 0.0000+000 0.0000+000 0.0000+000 0.0000+000 0.0000+000
YT         0.0000+000 0.0000+000 0.0000+000 0.0000+000 7.7287-005 4.2937-004 1.1249-003 1.9665-003 2.8081-003 3.6496-003
YT         0.0000+000 0.0000+000 0.0000+000 0.0000+000 8.5874-005 4.7231-004 1.2366-003 2.1640-003 3.0915-003 4.0189-003
YT         0.0000+000 0.0000+000 0.0000+000 0.0000+000 1.0305-004 5.5818-004 1.4513-003 2.5333-003 3.6153-003 4.6973-003
YT         0.0000+000 0.0000+000 0.0000+000 0.0000+000 1.0305-004 5.5818-004 1.4513-003 2.5333-003 3.6153-003 4.6973-003
YT         0.0000+000 0.0000+000 0.0000+000 0.0000+000 8.5874-005 4.6372-004 1.2022-003 2.0953-003 2.9884-003 3.8815-003
YT         0.0000+000 0.0000+000 0.0000+000 3.4350-005 2.7480-004 1.0992-003 2.9712-003 6.2516-003 1.1095-002 1.7544-002
YT         0.0000+000 0.0000+000 0.0000+000 0.0000+000-1.2881-004-6.8699-004-2.0009-003-4.3366-003-7.8059-003-1.2409-002
YT         0.0000+000 0.0000+000 2.5762-005 1.5457-004 4.4654-004 8.8450-004 1.3568-003 1.6831-003 1.7347-003 1.4770-003
YT         0.0000+000 0.0000+000 3.4350-005 1.8034-004 6.6123-004 1.8978-003 4.2508-003 7.8575-003 1.2752-002 1.8970-002
YT         0.0000+000 0.0000+000 2.5762-005 1.2022-004 4.2937-004 1.2881-003 2.9712-003 5.4873-003 8.7162-003 1.2546-002
YT         0.0000+000 0.0000+000 0.0000+000 0.0000+000 6.8699-005 3.7785-004 1.0734-003 2.1812-003 3.6582-003 5.4616-003
YT         0.0000+000 0.0000+000 0.0000+000 0.0000+000 0.0000+000 0.0000+000 0.0000+000 0.0000+000 0.0000+000 0.0000+000
YT         0.0000+000 0.0000+000 0.0000+000 0.0000+000 0.0000+000 0.0000+000 0.0000+000 0.0000+000 0.0000+000 0.0000+000
M,Q    14  1.0000-001
Y            0.00000    0.00000    0.00000    0.00000    0.00000    0.00000    0.00000    0.00000    0.00000    0.00000
Y            2.22000    2.22000    2.22000    2.22000    2.22008    2.22043    2.22112    2.22197    2.22281    2.22365
Y            4.26000    4.26000    4.26000    4.26000    4.26009    4.26047    4.26124    4.26216    4.26309    4.26402
Y            6.36000    6.36000    6.36000    6.36000    6.36010    6.36056    6.36145    6.36253    6.36362    6.36470
Y            8.46000    8.46000    8.46000    8.46000    8.46010    8.46056    8.46145    8.46253    8.46362    8.46470
Y           10.57000   10.57000   10.57000   10.57000   10.57009   10.57046   10.57120   10.57210   10.57299   10.57388
Y           12.67985   12.67971   12.67956   12.67945   12.67954   12.68022   12.68195   12.68508   12.68978   12.69608
```

Y	14.78015	14.78029	14.78044	14.78058	14.78060	14.78019	14.77902	14.77683	14.77351	14.76905	
Y	16.89000	16.89000	16.89003	16.89015	16.89045	16.89088	16.89136	16.89168	16.89173	16.89148	
Y	18.99000	18.99000	18.99003	18.99018	18.99066	18.99190	18.99425	18.99786	19.00275	19.00897	
Y	21.10000	21.10000	21.10003	21.10012	21.10043	21.10129	21.10297	21.10549	21.10872	21.11255	
Y	23.22000	23.22000	23.22000	23.22000	23.22007	23.22038	23.22107	23.22218	23.22366	23.22546	
Y	25.34000	25.34000	25.34000	25.34000	25.34000	25.34000	25.34000	25.34000	25.34000	25.34000	
Y	27.45000	27.45000	27.45000	27.45000	27.45000	27.45000	27.45000	27.45000	27.45000	27.45000	
Y	29.55000	29.55000	29.55000	29.55000	29.55000	29.55000	29.55000	29.55000	29.55000	29.55000	
MODE	0 0 0 0	0 0 0	0 0 0	0 0 0	0 0 0						
ZF	3.0000-003	3.0000-003	3.0000-003	3.0000-003	3.0000-003	3.0000-003	3.0000-003	3.0000-003	3.0000-003	3.0000-003	
ZF	3.0000-003	3.0000-003	3.0000-003	3.0000-003	3.0000-003						
YFR	0.03265	2.25002	4.29170	6.39170	8.49088	10.61305	12.69608	14.80848	16.93597	19.02955	
YFR	21.13246	23.24700	25.36700	27.47700	29.64500						
YFL	-0.00000	2.19100	4.23765	6.33702	8.43770	10.54770	12.65688	14.76905	16.85208	18.96448	
YFL	21.09197	23.20555	25.31846	27.42300	29.52300						
ZL	2.0000-003	2.0000-003	2.0000-003	2.0000-003	2.0000-003	2.0000-003	2.0000-003	2.0000-003	2.0000-003	2.0000-003	
ZL	2.0000-003	2.0000-003	2.0000-003	2.0000-003	2.0000-003						
YFLR	0.00240	2.22242	4.26243	6.36240	8.46239	10.57186	12.68299	14.78287	16.89302	18.99282	
YFLR	21.10257	23.22250	25.34250	27.45250	30.55000						
YFLL	0.00000	2.21768	4.25774	6.35776	8.45780	10.56780	12.67775	14.77716	16.88820	18.98809	
YFLL	21.09827	23.21793	25.33757	27.44750	29.54750						
PL	0.0000+000	0.0000+000	0.0000+000	0.0000+000	0.0000+000	0.0000+000	0.0000+000	0.0000+000	0.0000+000	0.0000+000	
PL	0.0000+000	0.0000+000	0.0000+000	0.0000+000	0.0000+000						
PR	0.0000+000	0.0000+000	0.0000+000	0.0000+000	0.0000+000	0.0000+000	0.0000+000	0.0000+000	0.0000+000	0.0000+000	
PR	0.0000+000	0.0000+000	0.0000+000	0.0000+000	0.0000+000						
WL	0.0000+000	0.0000+000	0.0000+000	0.0000+000	0.0000+000	0.0000+000	0.0000+000	0.0000+000	0.0000+000	0.0000+000	
WL	0.0000+000	0.0000+000	0.0000+000	0.0000+000	0.0000+000						
WR	0.0000+000	0.0000+000	0.0000+000	0.0000+000	0.0000+000	0.0000+000	0.0000+000	0.0000+000	0.0000+000	0.0000+000	
WR	0.0000+000	0.0000+000	0.0000+000	0.0000+000	0.0000+000						
DD	2.2177+000	2.0377+000	2.0977+000	2.0977+000	2.1077+000	2.1077+000	2.0976+000	2.1076+000	2.0976+000	2.1076+000	
DD	2.1175+000	2.1175+000	2.1075+000	2.0975+000	-0.0000+000						
YT	0.0000+000	0.0000+000	0.0000+000	0.0000+000	0.0000+000	0.0000+000	0.0000+000	0.0000+000	0.0000+000	0.0000+000	
YT	0.0000+000	0.0000+000	0.0000+000	0.0000+000	1.5457-004	8.5874-004	2.2499-003	3.9330-003	5.6162-003	7.2993-003	
YT	0.0000+000	0.0000+000	0.0003+000	0.0000+000	1.7175-004	9.4461-004	2.4732-003	4.3280-003	6.1829-003	8.0378-003	
YT	0.0000+000	0.0000+000	0.0000+000	0.0000+000	2.0610-004	1.1164-003	2.9025-003	5.0666-003	7.2306-003	9.3946-003	
YT	0.0000+000	0.0000+000	0.0000+000	0.0000+000	2.0610-004	1.1164-003	2.9025-003	5.0666-003	7.2306-003	9.3946-003	
YT	0.0000+000	0.0000+000	0.0000+000	0.0000+000	1.7175-004	9.2744-004	2.4045-003	4.1907-003	5.9768-003	7.7630-003	
YT	0.0000+000	0.0000+000	0.0000+000	6.8699-005	5.4959-004	2.1984-003	5.9425-003	1.2503-002	2.2190-002	3.5088-002	
YT	0.0000+000	0.0000+000	0.0000+000	0.0000+000	-2.5762-004	-1.3740-003	-4.0017-003	-8.6733-003	-1.5612-002	-2.4818-002	
YT	0.0000+000	0.0000+000	5.1524-005	3.0915-004	8.9309-004	1.7690-003	2.7136-003	3.3663-003	3.4693-003	2.9541-003	
YT	0.0000+000	0.0000+000	6.8699-005	3.6067-004	1.3225-003	3.7956-003	8.5015-003	1.5715-002	2.5505-002	3.7939-002	
YT	0.0000+000	0.0000+000	5.1524-005	2.4045-004	8.5874-004	2.5762-003	5.9425-003	1.0975-002	1.7432-002	2.5092-002	
YT	0.0000+000	0.0000+000	0.0000+000	0.0000+000	1.3740-004	7.5569-004	2.1468-003	4.3624-003	7.3165-003	1.0923-002	
YT	0.0000+000	0.0000+000	0.0000+000	0.0000+000	0.0000+000	0.0000+000	0.0000+000	0.0000+000	0.0000+000	0.0000+000	
YT	0.0000+000	0.0000+000	0.0000+000	0.0000+000	0.0000+000	0.0000+000	0.0000+000	0.0000+000	0.0000+000	0.0000+000	
YT	0.0000+000	0.0000+000	0.0000+000	0.0000+000	0.0000+000	0.0000+000	0.0000+000	0.0000+000	0.0000+000	0.0000+000	
M.Q	81 2.0000-001										
Y	0.00000	0.00000	0.00000	0.00000	0.00000	0.00000	0.00000	0.00000	0.00000	0.00000	
Y	2.22000	2.22000	2.22000	2.22000	2.22015	2.22086	2.22225	2.22393	2.22562	2.22730	
Y	4.26000	4.26000	4.26000	4.26000	4.26017	4.26094	4.26247	4.26433	4.26618	4.26804	
Y	6.35970	6.35939	6.35909	6.35879	6.35869	6.35929	6.36078	6.36264	6.36450	6.36636	
Y	8.45928	8.45855	8.45783	8.45710	8.45659	8.45677	8.45784	8.45928	8.46072	8.46216	
Y	10.56886	10.56772	10.56659	10.56545	10.56448	10.56410	10.56444	10.56509	10.56574	10.56638	
Y	12.67844	12.67683	12.67517	12.67355	12.67232	12.67222	12.67420	12.67898	12.68688	12.69798	
Y	14.78148	14.78299	14.78453	14.78610	14.78742	14.78791	14.78690	14.78385	14.77855	14.77098	
Y	16.89084	16.89167	16.89256	16.89366	16.89508	16.89679	16.89857	16.90006	16.90100	16.90133	
Y	18.99035	18.99070	18.99112	18.99176	18.99307	18.99590	19.00095	19.00852	19.01866	19.03144	
Y	21.10000	21.10000	21.10005	21.10024	21.10086	21.10258	21.10594	21.11097	21.11743	21.12509	
Y	23.22000	23.22000	23.22000	23.22000	23.22014	23.22076	23.22215	23.22436	23.22732	23.23092	
Y	25.34000	25.34000	25.34000	25.34000	25.34000	25.34000	25.34000	25.34000	25.34000	25.34000	
Y	27.45000	27.45000	27.45000	27.45000	27.45000	27.45000	27.45000	27.45000	27.45000	27.45000	
Y	29.55000	29.55000	29.55000	29.55000	29.55000	29.55000	29.55000	29.55000	29.55000	29.55000	

```
MODE   0   0   0   1   1  -1   0   0   1   1   0   0   0   0   0
ZF        3.0000-003 3.0000-003 3.0000-003 3.0000-003 3.0000-003 3.0000-003 5.8028-006 5.8028-006 3.0000-003 3.0000-003
ZF        3.0000-003 3.0000-003 3.0000-003 3.0000-003 3.0000-003
YFR          0.03630    2.25404    4.29334    6.38916    8.48339   10.61498   12.69798   14.81832   16.95821   19.04209
YFR         21.13792   23.24700   25.36700   27.47700   29.64500
YFL         -0.00000    2.19100    4.24130    6.34104    8.43934   10.54516   12.64939   14.77098   16.85398   18.97432
YFL         21.11421   23.21809   25.32392   27.42300   29.52300
ZL        2.0000-003 2.0000-003-1.6000-003-1.0240-003-1.1806-005-1.9807-006-1.9807-006 6.0446-006 2.1475-004 1.2800-003
ZL        2.0000-003 2.0000-003 2.0000-003 2.0000-003 2.0000-003
YFLR         0.00230    2.22235    4.26084    6.35869    8.45659   10.56448   12.68966   14.78764   16.89518   18.99315
YFLR        21.10264   23.22250   25.34250   27.45250   30.55000
YFLL         0.00000    2.21785    4.25798    6.35801    8.45658   10.56448   12.67232   14.77007   16.89508   18.99307
YFLL        21.10067   23.21836   25.33764   27.44750   29.54750
PL        0.0000+000 0.0000+000 0.0000+000 0.0000+000 0.0000+000 0.0000+000 0.0000+000-9.9277+000 0.0000+000 0.0000+000
PL        0.0000+000 0.0000+000 0.0000+000 0.0000+000 0.0000+000
PR        0.0000+000 0.0000+000 0.0000+000 0.0000+000 0.0000+000 0.0000+000 1.2486+001 0.0000+000 0.0000+000 0.0000+000
PR        0.0000+000 0.0000+000 0.0000+000 0.0000+000 0.0000+000
WL        0.0000+000 0.0000+000 0.0000+000 0.0000+000 0.0000+000-2.5122-001 0.0000+000 0.0000+000 0.0000+000 0.0000+000
WL        0.0000+000 0.0000+000 0.0000+000 0.0000+000 0.0000+000
WR        0.0000+000 0.0000+000 0.0000+000 0.0000+000 0.0000+000 3.0705-001 0.0000+000 0.0000+000 0.0000+000 0.0000+000
WR        0.0000+000 0.0000+000 0.0000+000 0.0000+000 0.0000+000
DD        2.2179+000 2.0378+000 2.0978+000 2.0979+000 2.1079+000 2.1078+000 2.0978+000 2.1077+000 2.0978+000 2.1077+000
DD        2.1175+000 2.1175+000 2.1075+000 2.0975+000-0.0000+000
YT        0.0000+000 0.0000+000 0.0000+000 0.0000+000 0.0000+000 0.0000+000 0.0000+000 0.0000+000 0.0000+000 0.0000+000
YT        0.0000+000 0.0000+000 0.0000+000 0.0000+000 2.3186-004 1.2881-003 3.3748-003 5.8995-003 8.4242-003 1.0949-002
YT        0.0000+000 0.0000+000 0.0000+000 0.0000+000 2.5762-004 1.4169-003 3.7098-003 6.4921-003 9.2744-003 1.2057-002
YT        0.0000+000 0.0000+000 0.0000+000 0.0000+000 3.0915-004 1.6745-003 4.3538-003 7.5998-003 1.0846-002 1.4092-002
YT        0.0000+000 0.0000+000 0.0000+000 0.0000+000 3.0915-004 1.6745-003 4.3538-003 7.5998-003 1.0846-002 1.4092-002
YT        0.0000+000 0.0000+000 0.0000+000 0.0000+000 2.5762-004 1.3912-003 3.6067-003 6.2860-003 8.9652-003 1.1645-002
YT        0.0000+000 0.0000+000 0.0000+000 1.0305-004 8.2439-004 3.2976-003 8.9137-003 1.8755-002 3.3285-002 5.2632-002
YT        0.0000+000 0.0000+000 0.0000+000 0.0000+000-3.8643-004-2.0610-003-6.0026-003-1.3010-002-2.3418-002-3.7226-002
YT        0.0000+000 0.0000+000 7.7287-005 4.6372-004 1.3396-003 2.6535-003 4.0704-003 5.0494-003 5.2040-003 4.4311-003
YT        0.0000+000 0.0000+000 1.0305-004 5.4101-004 1.9837-003 5.6934-003 1.2752-002 2.3572-002 3.8257-002 5.6909-002
YT        0.0000+000 0.0000+000 7.7287-005 3.6067-004 1.2881-003 3.8643-003 8.9137-003 1.6462-002 2.6149-002 3.7639-002
YT        0.0000+000 0.0000+000 0.0000+000 0.0000+000 2.0610-004 1.1335-003 3.2203-003 6.5436-003 1.0975-002 1.6385-002
YT        0.0000+000 0.0000+000 0.0000+000 0.0000+000 0.0000+000 0.0000+000 0.0000+000 0.0000+000 0.0000+000 0.0000+000
YT        0.0000+000 0.0000+000 0.0000+000 0.0000+000 0.0000+000 0.0000+000 0.0000+000 0.0000+000 0.0000+000 0.0000+000
YT        0.0000+000 0.0000+000 0.0000+000 0.0000+000 0.0000+000 0.0000+000 0.0000+000 0.0000+000 0.0000+000 0.0000+000
M,C   130  3.0000-001
Y            0.00000    0.00000    0.00000    0.00000    0.00000    0.00000    0.00000    0.00000    0.00000    0.00000
Y            2.21943    2.21887    2.21830    2.21774    2.21740    2.21789    2.21941    2.22137    2.22333    2.22529
Y            4.25896    4.25793    4.25689    4.25585    4.25507    4.25520    4.25645    4.25820    4.25994    4.26169
Y            6.35860    6.35713    6.35562    6.35407    6.35282    6.35262    6.35373    6.35542    6.35710    6.35878
Y            8.45830    8.45645    8.45448    8.45243    8.45065    8.44992    8.45050    8.45165    8.45280    8.45396
Y           10.56816   10.56598   10.56354   10.56093   10.55850   10.55692   10.55643   10.55640   10.55637   10.55635
Y           12.67762   12.67502   12.67217   12.66916   12.66647   12.66524   12.66691   12.67262   12.68290   12.69793
Y           14.78198   14.78411   14.78642   14.78894   14.79130   14.79261   14.79186   14.78820   14.78124   14.77093
Y           16.89145   16.89295   16.89459   16.89656   16.89904   16.90196   16.90498   16.90756   16.90932   16.91016
Y           18.99099   18.99199   18.99308   18.99452   18.99695   19.00166   19.00971   19.02152   19.03720   19.05685
Y           21.10069   21.10139   21.10216   21.10314   21.10476   21.10803   21.11377   21.12202   21.13240   21.14458
Y           23.22045   23.22089   23.22134   23.22178   23.22244   23.22381   23.22634   23.23011   23.23499   23.24085
Y           25.34000   25.34000   25.34000   25.34000   25.34000   25.34000   25.34000   25.34000   25.34000   25.34000
Y           27.45000   27.45000   27.45000   27.45000   27.45000   27.45000   27.45000   27.45000   27.45000   27.45000
Y           29.55000   29.55000   29.55000   29.55000   29.55000   29.55000   29.55000   29.55000   29.55000   29.55000
MODE   0  -1  -1  -2  -2  -2  30  30  -2   1   1   1   0   0   0
ZF        3.0000-003 3.0000-003 3.0000-003 3.0000-003 3.0000-003 3.0000-003 2.0616-004 2.0616-004 3.0000-003 3.0000-003
ZF        3.0000-003 3.0000-003 3.0000-003 3.0000-003 3.0000-003
YFR          0.03428    2.24768    4.28577    6.38095    8.47333   10.61493   12.69793   14.82718   16.98379   19.06166
YFR         21.14755   23.24719   25.36700   27.47700   29.64500
YFL         -0.00000    2.19100    4.23928    6.33468    8.43177   10.53695   12.63933   14.77093   16.85393   18.98318
YFL         21.13979   23.23766   25.33355   27.42319   29.52300
ZL        2.0000-003-1.7180-004 3.6029-005 8.7961-005 3.6029-005-4.1943-004-6.5536-004 9.4447-006-1.8447-005 5.6295-005
```

```
ZL        1.3744-004 2.0000-003 2.0000-003 2.0000-003 2.0000-003
YFLR        0.00000    2.21709    4.25481    6.35255    8.45038  10.55825  12.69343  14.79130  16.89902  18.99712
YFLR       21.10479   23.22259   25.34250   27.45250   30.55000
YFLL        0.00000    2.21771    4.25534    6.35308    8.45092  10.55875  12.66647  14.76414  16.89905  18.99695
YFLL       21.10476   23.22244   25.33979   27.44759   29.54750
PL        0.0000+000 0.0000+000 0.0000+000 0.0000+000 0.0000+000 0.0000+000 0.0000+000-1.4496+002 0.0000+000 0.0000+000
PL        0.0000+000 0.0000+000 0.0000+000 0.0000+000 0.0000+000
PR        0.0000+000 0.0000+000 0.0000+000 0.0000+000 0.0000+000 0.0000+000 1.4994+002 0.0000+000 0.0000+000 0.0000+000
PR        0.0000+000 0.0000+000 0.0000+000 0.0000+000 0.0000+000
WL        0.0000+000-1.2961+001-3.2909+001-5.5123+001-7.8836+001-9.3532+001-1.9902+002 0.0000+000-1.1619+002 0.0000+000
WL        0.0000+000 0.0000+000 0.0000+000 0.0000+000 0.0000+000
WR        0.0000+000 3.8882+001 5.4849+001 8.3005+001 1.2021+002 1.6598+002 0.0000+000 2.1616+002 1.1453+002 0.0000+000
WR        0.0000+000 0.0000+000 0.0000+000 0.0000+000 0.0000+000
CD        2.1277+000 2.0380+000 2.0980+000 2.0981+000 2.1081+000 2.1080+000 2.0979+000 2.1077+000 2.0979+000 2.1078+000
DD        2.1175+000 2.1175+000 2.1075+000 2.0975+000-0.0000+000
YT        0.0000+000 0.0000+000 0.0000+000 0.0000+000 0.0000+000 0.0000+000 0.0000+000 0.0000+000 0.0000+000 0.0000+000
YT        0.0000+000 0.0000+000 0.0000+000 0.0000+000 3.0915-004 1.7175-003 4.4998-003 7.8661-003 1.1232-002 1.4599-002
YT        0.0000+000 0.0000+000 0.0000+000 0.0000+000 3.4350-004 1.8892-003 4.9463-003 8.6561-003 1.2366-002 1.6076-002
YT        0.0000+000 0.0000+000 0.0000+000 0.0000+000 4.1220-004 2.2327-003 5.8051-003 1.0133-002 1.4461-002 1.8789-002
YT        0.0000+000 0.0000+000 0.0000+000 0.0000+000 4.1220-004 2.2327-003 5.8051-003 1.0133-002 1.4461-002 1.8789-002
YT        0.0000+000 0.0000+000 0.0000+000 0.0000+000 3.4350-004 1.8549-003 4.8089-003 8.3813-003 1.1954-002 1.5526-002
YT        0.0000+000 0.0000+000 0.0000+000 0.0000+000 1.3740-004 1.0992-003 4.3967-003 1.1885-002 2.5007-002 4.4380-002 7.0176-002
YT        0.0000+000 0.0000+000 0.0000+000 0.0000+000-5.1524-004-2.7480-003-8.0035-003-1.7347-002-3.1224-002-4.9635-002
YT        0.0000+000 0.0000+000 0.0000+000 1.0305-004 6.1829-004 1.7862-003 3.5380-003 5.4272-003 6.7325-003 6.9386-003 5.9081-003
YT        0.0000+000 0.0000+000 0.0000+000 1.3740-004 7.2134-004 2.6449-003 7.5913-003 1.7003-002 3.1430-002 5.1009-002 7.5878-002
YT        0.0000+000 0.0000+000 0.0000+000 1.0305-004 4.8089-004 1.7175-003 5.1524-003 1.1885-002 2.1949-002 3.4865-002 5.0185-002
YT        0.0000+000 0.0000+000 0.0000+000 0.0000+000 2.7480-004 1.5114-003 4.2937-003 8.7248-003 1.4633-002 2.1846-002
YT        0.0000+000 0.0000+000 0.0000+000 0.0000+000 0.0000+000 0.0000+000 0.0000+000 0.0000+000 0.0000+000 0.0000+000
YT        0.0000+000 0.0000+000 0.0000+000 0.0000+000 0.0000+000 0.0000+000 0.0000+000 0.0000+000 0.0000+000 0.0000+000
YT        0.0000+000 0.0000+000 0.0000+000 0.0000+000 0.0000+000 0.0000+000 0.0000+000 0.0000+000 0.0000+000 0.0000+000
M,Q   312  4.0000-001
Y           0.00000    0.00000    0.00000    0.00000    0.00000    0.00000    0.00000    0.00000    0.00000    0.00000
Y           2.21919    2.21839    2.21758    2.21677    2.21627    2.21687    2.21885    2.22141    2.22397    2.22653
Y           4.25866    4.25729    4.25590    4.25450    4.25344    4.25358    4.25523    4.25753    4.25983    4.26213
Y           6.35838    6.35656    6.35459    6.35252    6.35081    6.35050    6.35194    6.35414    6.35634    6.35854
Y           8.45757    8.45514    8.45271    8.45028    8.44826    8.44765    8.44879    8.45069    8.45259    8.45448
Y          10.56788   10.56524   10.56222   10.55893   10.55586   10.55394   10.55346   10.55359   10.55373   10.55387
Y          12.67736   12.67440   12.67103   12.66731   12.66387   12.66216   12.66415   12.67138   12.68462   12.70416
Y          14.78288   14.78612   14.78974   14.79381   14.79784   14.80066   14.80088   14.79733   14.78946   14.77716
Y          16.89220   16.89478   16.89775   16.90133   16.90566   16.91059   16.91565   16.92013   16.92352   16.92566
Y          18.99196   18.99415   18.99662   18.99954   19.00370   19.01070   19.02199   19.03817   19.05942   19.08591
Y          21.10177   21.10372   21.10588   21.10834   21.11161   21.11697   21.12552   21.13733   21.15194   21.16894
Y          23.22158   23.22330   23.22513   23.22707   23.22938   23.23272   23.23766   23.24430   23.25245   23.26191
Y          25.34138   25.34279   25.34424   25.34571   25.34721   25.34873   25.35027   25.35182   25.35337   25.35494
Y          27.45094   27.45189   27.45283   27.45377   27.45471   27.45566   27.45660   27.45754   27.45849   27.45943
Y          29.55084   29.55168   29.55252   29.55336   29.55420   29.55504   29.55588   29.55672   29.55756   29.55840
MODE   0  -1  -2  -2  -1  -2  30  30  -2  -5   5   0   0   1   1
ZF        3.0000-003 3.0000-003 3.0000-003 3.0000-003 3.0000-003-2.4000-003 5.0332-004 5.0332-004 3.0000-003 6.6902-008
ZF        6.2308-007 1.3194-004-2.1923-008 3.0000-003 3.0000-003
YFR         0.03552    2.24812    4.28553    6.38147    8.47086   10.62116   12.70416   14.84263   17.01289   19.08591
YFR        21.16894   23.26191   25.37640   27.48339   29.64500
YFL        -0.00000    2.19100    4.24052    6.33512    8.43153   10.53747   12.63686   14.77716   16.86016   18.99863
YFL        21.16889   23.26191   25.35494   27.43791   29.53240
ZL        2.0000-003-6.5536-004 1.3744-004 1.3744-004 1.3744-004-1.6000-003-1.6000-003 8.7961-005 5.6295-005-1.8093-011
ZL        1.4757-005 1.7014-007 1.4757-005 2.0000-003 2.0000-003
YFLR        0.00000    2.21531    4.25263    6.34999    8.44741   10.55515   12.69986   14.79784   16.90563   19.00368
YFLR       21.11187   23.22971   25.34920   27.45569   30.55000
YFLL        0.00000    2.21724    4.25425    6.35163    8.44911   10.55658   12.66387   14.76133   16.90570   19.00372
YFLL       21.11161   23.22910   25.34687   27.45471   29.55420
PL        0.0000+000 0.0000+000 0.0000+000 0.0000+000 0.0000+000 0.0000+000 0.0000+000-3.0035+002 0.0000+000 0.0000+000
PL        0.0000+000-2.2839+001-5.9416+000 0.0000+000 0.0000+000
PR        0.0000+000 0.0000+000 0.0000+000 0.0000+000 0.0000+000 0.0000+000 3.0675+002 0.0000+000 0.0000+000 4.6609+001
```

```
PR        3.0586+001 2.9571+000 0.0000+000 0.0000+000 0.0000+000
WL        0.0000+000-4.0126+001-1.0089+002-1.7155+002-2.4788+002-2.6775+002-4.8914+002 0.0000+000-3.1573+002-2.9370+002
WL       -1.2307+002 0.0000+000 0.0000+000 0.0000+000 0.0000+000
WR        0.0000+000 1.2038+002 1.6973+002 2.5844+002 3.1870+002 4.0563+002 0.0000+000 4.2781+002 2.5233+002 1.3755+002
WR        0.0000+000 0.0000+000 0.0000+000 0.0000+000 0.0000+000
DD        2.2172+000 2.0381+000 2.0982+000 2.0983+000 2.1083+000 2.1082+000 2.0980+000 2.1078+000 2.0981+000 2.1079+000
DD        2.1175+000 2.1175+000 2.1075+000 2.0975+000-0.0000+000
YT        0.0000+000 0.0000+000 0.0000+000 0.0000+000 0.0000+000 0.0000+000 0.0000+000 0.0000+000 0.0000+000 0.0000+000
YT        0.0000+000 0.0000+000 0.0000+000 0.0000+000 3.8643-004 2.1468-003 5.6247-003 9.8326-003 1.4040-002 1.8248-002
YT        0.0000+000 0.0000+000 0.0000+000 0.0000+000 4.2937-004 2.3615-003 6.1829-003 1.0820-002 1.5457-002 2.0095-002
YT        0.0000+000 0.0000+000 0.0000+000 0.0000+000 5.1524-004 2.7909-003 7.2564-003 1.2666-002 1.8076-002 2.3487-002
YT        0.0000+000 0.0000+000 0.0000+000 0.0000+000 5.1524-004 2.7909-003 7.2564-003 1.2666-002 1.8076-002 2.3487-002
YT        0.0000+000 0.0000+000 0.0000+000 0.0000+000 4.2937-004 2.3186-003 6.0112-003 1.0477-002 1.4942-002 1.9408-002
YT        0.0000+000 0.0000+000 0.0000+000 1.7175-004 1.3740-003 5.4959-003 1.4856-002 3.1258-002 5.5475-002 8.7720-002
YT        0.0000+000 0.0000+000 0.0000+000 0.0000+000-6.4405-004-3.4350-003-1.0004-002-2.1683-002-3.9030-002-6.2044-002
YT        0.0000+000 0.0000+000 1.2881-004 7.7287-004 2.2327-003 4.4225-003 6.7840-003 8.4157-003 8.6733-003 7.3852-003
YT        0.0000+000 0.0000+000 1.7175-004 9.0168-004 3.3061-003 9.4891-003 2.1254-002 3.9287-002 6.3761-002 9.4848-002
YT        0.0000+000 0.0000+000 1.2881-004 6.0112-004 2.1468-003 6.4405-003 1.4856-002 2.7437-002 4.3581-002 6.2731-002
YT        0.0000+000 0.0000+000 0.0000+000 0.0000+000 3.4350-004 1.8892-003 5.3671-003 1.0906-002 1.8291-002 2.7308-002
YT        0.0000+000 0.0000+000 0.0000+000 0.0000+000 0.0000+000 0.0000+000 0.0000+000 0.0000+000 0.0000+000 0.0000+000
YT        0.0000+000 0.0000+000 0.0000+000 0.0000+000 0.0000+000 0.0000+000 0.0000+000 0.0000+000 0.0000+000 0.0000+000
YT        0.0000+000 0.0000+000 0.0000+000 0.0000+000 0.0000+000 0.0000+000 0.0000+000 0.0000+000 0.0000+000 0.0000+000
M.Q   316  5.0000-001
Y            0.00000    0.00000    0.00000    0.00000    0.00000    0.00000    0.00000    0.00000    0.00000    0.00000
Y           2.21893    2.21786    2.21679    2.21573    2.21504    2.21573    2.21814    2.22128    2.22442    2.22756
Y           4.25847    4.25679    4.25500    4.25313    4.25166    4.25168    4.25360    4.25633    4.25906    4.26179
Y           6.35760    6.35521    6.35281    6.35042    6.34854    6.34842    6.35049    6.35350    6.35652    6.35953
Y           8.45782    8.45509    8.45195    8.44852    8.44548    8.44417    8.44505    8.44688    8.44870    8.45053
Y          10.56755   10.56438   10.56066   10.55658   10.55275   10.55035   10.54975   10.54992   10.55010   10.55027
Y          12.67715   12.67384   12.66989   12.66530   12.66075   12.65803   12.65963   12.66757   12.68286   12.70596
Y          14.78312   14.78671   14.79090   14.79582   14.80095   14.80486   14.80578   14.80218   14.79330   14.77896
Y          16.89253   16.89559   16.89917   16.90354   16.90885   16.91491   16.92114   16.92665   16.93078   16.93336
Y          18.99262   18.99562   18.99886   19.00238   19.00697   19.01448   19.02683   19.04488   19.06900   19.09954
Y          21.10231   21.10495   21.10786   21.11103   21.11500   21.12128   21.13128   21.14516   21.16240   21.18255
Y          23.22191   23.22410   23.22655   23.22923   23.23245   23.23703   23.24366   23.25246   23.26317   23.27554
Y          25.34186   25.34399   25.34638   25.34902   25.35189   25.35497   25.35821   25.36159   25.36505   25.36855
Y          27.45177   27.45361   27.45551   27.45744   27.45939   27.46134   27.46329   27.46524   27.46719   27.46914
Y          29.55135   29.55272   29.55410   29.55549   29.55689   29.55829   29.55969   29.56109   29.56249   29.56388
MODE   0  -1  -2  -1  -2  -2  30  30  -2  -5   5   0  30  -2   2
ZF        3.0000-003 3.0000-003 3.0000-003 3.0000-003 3.0000-003-6.2915-004 7.8643-004 7.8643-004 3.0000-003 1.4167-005
ZF        2.3768-006 8.4442-005-7.7884-007 3.0000-003 3.0000-003
YFR          0.03656    2.24778    4.28568    6.37752    8.46726   10.62296   12.70596   14.85035   17.02654   19.09954
YFR         21.18255   23.27554   25.38612   27.49088   29.64500
YFL         -0.00000    2.19100    4.24156    6.33478    8.43168   10.53352   12.63326   14.77896   16.86196   19.00635
YFL         21.18254   23.27554   25.36855   27.45154   29.54212
ZL        2.0000-003-6.5536-004 2.1475-004 7.4829-009 2.1475-004-1.6000-003-1.6000-003 1.3744-004-3.0949-006-8.1130-007
ZL        1.5846-006 2.1475-004 1.2554-009 1.3744-004-1.2677-006
YFLR         0.00000    2.21338    4.25018    6.34704    8.44393   10.55147   12.70288   14.80095   16.90877   19.00689
YFLR        21.11518   23.23439   25.35189   27.45939   30.55000
YFLL         0.00000    2.21671    4.25313    6.35003    8.44703   10.55403   12.66075   14.75795   16.90892   19.00704
YFLL        21.11500   23.23242   25.35018   27.45939   29.55689
PL        0.0000+000 0.0000+000 0.0000+000 0.0000+000 0.0000+000 0.0000+000 0.0000+000-5.5835+002 0.0000+000 0.0000+000
PL        0.0000+000-5.7314+001-6.1949+001 0.0000+000 0.0000+000
PR        0.0000+000 0.0000+000 0.0000+000 0.0000+000-4.1359-025 0.0000+000 5.6433+002 0.0000+000 0.0000+000 2.0499+002
PR        1.1903+002 1.4463+001 0.0000+000 0.0000+000 0.0000+000
WL        0.0000+000-6.9433+001-1.8424+002-3.1113+002-4.5261+002-4.7994+002-9.8624+002 0.0000+000-6.0212+002-1.1059+003
WL       -3.7088+002 0.0000+000 0.0000+000-3.1683+001-9.2260+000
WR        0.0000+000 2.0830+002 3.1598+002 4.3558+002 6.4894+002 6.9639+002 0.0000+000 9.1992+002 5.3771+002 6.0149+002
WR        0.0000+000 0.0000+000 3.8582+001 4.3801+000 0.0000+000
DD        2.2167+000 2.0383+000 2.0983+000 2.0985+000 2.1085+000 2.1083+000 2.0982+000 2.1079+000 2.0982+000 2.1080+000
DD        2.1175+000 2.1175+000 2.1075+000 2.0975+000-0.0000+000
YT        0.0000+000 0.0000+000 0.0000+000 0.0000+000 0.0000+000 0.0000+000 0.0000+000 0.0000+000 0.0000+000 0.0000+000
```

```
YT        0.0000+000 0.0000+000 0.0000+000 0.0000+000 4.6372-004 2.5762-003 6.7497-003 1.1799-002 1.6848-002 2.1898-002
YT        0.0000+000 0.0000+000 0.0000+000 0.0000+000 5.1524-004 2.8338-003 7.4195-003 1.2984-002 1.8549-002 2.4113-002
YT        0.0000+000 0.0000+000 0.0000+000 0.0000+000 6.1829-004 3.3491-003 8.7076-003 1.5200-002 2.1692-002 2.8184-002
YT        0.0000+000 0.0000+000 0.0000+000 0.0000+000 6.1829-004 3.3491-003 8.7076-003 1.5200-002 2.1692-002 2.8184-002
YT        0.0000+000 0.0000+000 0.0000+000 0.0000+000 5.1524-004 2.7823-003 7.2134-003 1.2572-002 1.7930-002 2.3289-002
YT        0.0000+000 0.0000+000 0.0000+000 0.0000+000 2.0610-004 1.6488-003 6.5951-003 1.7827-002 3.7510-002 6.6570-002 1.0526-001
YT        0.0000+000 0.0000+000 0.0000+000 0.0000+000-7.7287-004-4.1220-003-1.2005-002-2.6020-002-4.6836-002-7.4453-002
YT        0.0000+000 0.0000+000 0.0000+000 1.5457-004 9.2744-004 2.6793-003 5.3070-003 8.1409-003 1.0099-002 1.0408-002 8.8622-003
YT        0.0000+000 0.0000+000 2.0610-004 1.0820-003 3.9674-003 1.1387-002 2.5505-002 4.7145-002 7.6514-002 1.1382-001
YT        0.0000+000 0.0000+000 1.5457-004 7.2134-004 2.5762-003 7.7287-003 1.7827-002 3.2924-002 5.2297-002 7.5277-002
YT        0.0000+000 0.0000+000 0.0000+000 0.0000+000 4.1220-004 2.2671-003 6.4405-003 1.3087-002 2.1949-002 3.2770-002
YT        0.0000+000 0.0000+000 0.0000+000 0.0000+000 0.0000+000 0.0000+000 0.0000+000 0.0000+000 0.0000+000 0.0000+000
YT        0.0000+000 0.0000+000 0.0000+000 0.0000+000 0.0000+000 0.0000+000 0.0000+000 0.0000+000 0.0000+000 0.0000+000
YT        0.0000+000 0.0000+000 0.0000+000 0.0000+000 0.0000+000 0.0000+000 0.0000+000 0.0000+000 0.0000+000 0.0000+000
YT        0.0000+000 0.0000+000 0.0000+000 0.0000+000 0.0000+000 0.0000+000 0.0000+000 0.0000+000 0.0000+000 0.0000+000
M,C   50C  6.000C-001
Y           0.00000    0.00000    0.00000    0.00000    0.00000    0.00000    0.00000    0.00000    0.00000    0.00000
Y           2.21871    2.21742    2.21614    2.21485    2.21403    2.21485    2.21774    2.22150    2.22526    2.22902
Y           4.25831    4.25637    4.25425    4.25200    4.25021    4.25021    4.25248    4.25572    4.25897    4.26221
Y           6.35721    6.35443    6.35164    6.34886    6.34669    6.34664    6.34921    6.35292    6.35662    6.36033
Y           8.45758    8.45446    8.45080    8.44680    8.44323    8.44175    8.44290    8.44517    8.44745    8.44973
Y          10.56729   10.56370   10.55944   10.55473   10.55032   10.54762   10.54709   10.54748   10.54788   10.54827
Y          12.67701   12.67343   12.66902   12.66371   12.65828   12.65483   12.65637   12.66539   12.68314   12.71020
Y          14.78366   14.78796   14.79308   14.79920   14.80573   14.81097   14.81277   14.80926   14.79949   14.78320
Y          16.89307   16.89690   16.90145   16.90700   16.91371   16.92134   16.92917   16.93612   16.94143   16.94488
Y          18.99358   18.99778   19.00221   19.00669   19.01195   19.02006   19.03339   19.05313   19.07986   19.11415
Y          21.10312   21.10684   21.11089   21.11514   21.12004   21.12731   21.13871   21.15448   21.17411   21.19715
Y          23.22258   23.22571   23.22926   23.23310   23.23750   23.24338   23.25161   23.26231   23.27524   23.29013
Y          25.34210   25.34465   25.34771   25.35130   25.35549   25.36027   25.36555   25.37121   25.37711   25.38315
Y          27.45209   27.45451   27.45719   27.46004   27.46297   27.46592   27.46886   27.47181   27.47475   27.47770
Y          29.55184   29.55385   29.55599   29.55822   29.56049   29.56276   29.56504   29.56732   29.56959   29.57187
MODE   0  -1  -2  -1  -2  -2  30  30  -2  -5  -5   3  30  -2   2
ZF        3.0000-003 3.0000-003 3.0000-003 3.0000-003 2.3768-006-6.2915-004 7.8643-004 7.8643-004 3.0000-003 2.2136-005
ZF        3.4588-005 1.3194-004-1.1334-005-2.4000-003 3.0000-003
YFR          0.03802    2.24821    4.28732    6.37672    8.46526   10.62720   12.71020   14.86184   17.04114   19.11415
YFR         21.19715   23.29011   25.39468   27.49884   29.64500
YFL         -0.00000    2.19100    4.24302    6.33521    8.43332   10.53272   12.63126   14.78320   16.86620   19.01784
YFL         21.19714   23.29015   25.38315   27.46611   29.55068
ZL        2.0000-003-6.5536-004 2.1475-004-2.6844-004 3.3554-004-1.6000-003-1.6000-003 3.3554-004-7.5558-006-7.5558-006
ZL       -4.5036-005 3.6029-005 7.4829-009 5.6295-005-1.9807-006
YFLR         0.00000    2.21176    4.24816    6.34463    8.44109   10.54862   12.70759   14.80573   16.91359   19.01187
YFLR        21.12002   23.23797   25.35549   27.46297   30.55000
YFLL         0.00000    2.21629    4.25226    6.34875    8.44538   10.55202   12.65828   14.75540   16.91384   19.01204
YFLL        21.12006   23.23750   25.35502   27.46297   29.56049
PL        0.0000+000 0.0000+000 0.0000+000 0.0000+000 0.0000+000 0.0000+000 0.0000+000-7.7691+002 0.0000+000 0.0000+000
PL        0.0000+000-1.7238+002-1.8231+002 0.0000+000 0.0000+000
PR        0.0000+000 0.0000+000 0.0000+000 0.0000+000 0.0000+000 0.0000+000 7.8972+002 0.0000+000 0.0000+000 4.0446+002
PR        2.5073+002 1.6720+002 0.0000+000 0.0000+000 0.0000+000
WL        0.0000+000-9.4249+001-2.5587+002-4.2873+002-6.2517+002-6.3666+002-1.4246+003 0.0000+000-9.7187+002-1.6878+003
WL       -9.0607+002-1.7219+002 0.0000+000-1.4286+002-7.8335+001
WR        0.0000+000 2.8275+002 4.4140+002 6.0022+002 8.8924+002 9.1265+002 0.0000+000 1.2980+003 8.9355+002 6.7656+002
WR        1.8021+002 0.0000+000 2.4390+002 1.1176+001 0.0000+000
DD        2.2163+000 2.0385+000 2.0985+000 2.0987+000 2.1087+000 2.1085+000 2.0983+000 2.1080+000 2.0983+000 2.1081+000
DD        2.1175+000 2.1175+000 2.1075+000 2.0975+000-0.0000+000
YT        0.0000+000 0.0000+000 0.0000+000 0.0000+000 0.0000+000 0.0000+000 0.0000+000 0.0000+000 0.0000+000 0.0000+000
YT        0.0000+000 0.0000+000 0.0000+000 0.0000+000 5.4101-004 3.0056-003 7.8746-003 1.3766-002 1.9657-002 2.5548-002
YT        0.0000+000 0.0000+000 0.0000+000 0.0000+000 6.0112-004 3.3061-003 8.6561-003 1.5148-002 2.1640-002 2.8132-002
YT        0.0000+000 0.0000+000 0.0000+000 0.0000+000 7.2134-004 3.9073-003 1.0159-002 1.7733-002 2.5307-002 3.2881-002
YT        0.0000+000 0.0000+000 0.0000+000 0.0000+000 7.2134-004 3.9073-003 1.0159-002 1.7733-002 2.5307-002 3.2881-002
YT        0.0000+000 0.0000+000 0.0000+000 0.0000+000 6.0112-004 3.2460-003 8.4157-003 1.4667-002 2.0919-002 2.7171-002
YT        0.0000+000 0.0000+000 0.0000+000 0.0000+000 2.4045-004 1.9236-003 7.6943-003 2.0799-002 4.3761-002 7.7664-002 1.2281-001
YT        0.0000+000 0.0000+000 0.0000+000 0.0000+000-9.0168-004-4.8089-003-1.4006-002-3.0356-002-5.4642-002-8.6862-002
YT        0.0000+000 0.0000+000 1.8034-004 1.0820-003 3.1258-003 6.1915-003 9.4977-003 1.1782-002 1.2143-002 1.0339-002
```

```
YT        0.0000+000 0.0000+000 2.4045-004 1.2623-003 4.6286-003 1.3285-002 2.9755-002 5.5002-002 8.9266-002 1.3279-001
YT        0.0000+000 0.0000+000 1.8034-004 8.4157-004 3.0056-003 9.0168-003 2.0799-002 3.8411-002 6.1013-002 8.7823-002
YT        0.0000+000 0.0000+000 0.0000+000 0.0000+000 4.8089-004 2.6449-003 7.5140-003 1.5268-002 2.5608-002 3.8231-002
YT        0.0000+000 0.0000+000 0.0000+000 0.0000+000 0.0000+000 0.0000+000 0.0000+000 0.0000+000 0.0000+000 0.0000+000
YT        0.0000+000 0.0000+000 0.0000+000 0.0000+000 0.0000+000 0.0000+000 0.0000+000 0.0000+000 0.0000+000 0.0000+000
YT        0.0000+000 0.0000+000 0.0000+000 0.0000+000 0.0000+000 0.0000+000 0.0000+000 0.0000+000 0.0000+000 0.0000+000
M,C   500  7.0000-001
Y           0.00000    0.00000    0.00000    0.00000    0.00000    0.00000    0.00000    0.00000    0.00000    0.00000
Y           2.21859    2.21710    2.21556    2.21399    2.21294    2.21381    2.21708    2.22138    2.22567    2.22997
Y           4.25778    4.25545    4.25303    4.25055    4.24865    4.24884    4.25168    4.25566    4.25964    4.26362
Y           6.35772    6.35481    6.35144    6.34776    6.34464    6.34397    6.34636    6.35007    6.35378    6.35749
Y           8.45732    8.45376    8.44954    8.44489    8.44074    8.43902    8.44036    8.44303    8.44569    8.44836
Y          10.56700   10.56293   10.55806   10.55265   10.54758   10.54450   10.54395   10.54448   10.54501   10.54554
Y          12.67687   12.67303   12.66811   12.66198   12.65547   12.65100   12.65211   12.66177   12.68149   12.71202
Y          14.78385   14.78847   14.79411   14.80105   14.80866   14.81500   14.81753   14.81401   14.80330   14.78502
Y          16.89338   16.89766   16.90278   16.90907   16.91673   16.92544   16.93440   16.94233   16.94834   16.95219
Y          18.99417   18.99912   19.00426   19.00933   19.01508   19.02385   19.03846   19.06035   19.09026   19.12893
Y          21.10358   21.10791   21.11264   21.11758   21.12323   21.13156   21.14463   21.16275   21.18535   21.21189
Y          23.22290   23.22650   23.23069   23.23531   23.24071   23.24797   23.25806   23.27114   23.28686   23.30490
Y          25.34262   25.34597   25.35006   25.35492   25.36059   25.36705   25.37418   25.38180   25.38975   25.39787
Y          27.45271   27.45602   27.45979   27.46385   27.46807   27.47232   27.47657   27.48081   27.48506   27.48931
Y          29.55312   29.55624   29.55935   29.56247   29.56559   29.56871   29.57183   29.57495   29.57806   29.58118
MODE   0  -2  -2  -2  -2  -2  30  30  -2  -5  -5   3  30  -2   1
ZF        3.0000-003 3.0000-003 3.0000-003 3.0000-003 4.2817-008-1.5360-003 7.8643-004 7.8643-004 3.0000-003 3.4588-005
ZF        8.4442-005 8.4442-005 3.4588-005-2.4000-003 3.0000-003
YFR          0.03896    2.24911    4.28448    6.37535    8.46253   10.62902   12.71202   14.86914   17.05591   19.12893
YFR         21.21187   23.30487   25.40627   27.50815   29.64500
YFL         -0.00000    2.19100    4.24396    6.33611    8.43048   10.53135   12.62853   14.78502   16.86802   19.02514
YFL         21.21191   23.30493   25.39787   27.48087   29.56227
ZL        2.0000-003-6.5536-004 3.3554-004 8.1920-004 2.1475-004-1.6000-003-1.6000-003 5.2429-004-3.0949-006-7.0369-005
ZL       -7.5558-006 2.3058-005 1.0889-007 8.7961-005 8.0347-010
YFLR         0.00000    2.21004    4.24598    6.34193    8.43792   10.54545   12.71047   14.80866   16.91653   19.01497
YFLR        21.12321   23.24307   25.36059   27.46807   30.55000
YFLL         0.00000    2.21583    4.25132    6.34736    8.44356   10.54971   12.65547   14.75252   16.91692   19.01519
YFLL        21.12325   23.24071   25.35821   27.46807   29.56559
PL        0.0000+000 0.0000+000 0.0000+000 0.0000+000 0.0000+000 0.0000+000 0.0000+000-1.0489+003 0.0000+000 0.0000+000
PL       -1.6486+002-3.4745+002-2.4091+002-6.6174-024 0.0000+000
PR        0.0000+000 0.0000+000 0.0000+000 0.0000+000 0.0000+000 0.0000+000 1.0668+003 0.0000+000 0.0000+000 5.4213+002
PR        4.7916+002 3.0505+002 0.0000+000 0.0000+000 0.0000+000
WL        0.0000+000-1.2059+002-3.3361+002-5.6586+002-8.2318+002-7.9885+002-1.9680+003 0.0000+000-1.4408+003-2.1928+003
WL       -1.1056+003-1.4221+002 0.0000+000-2.3733+002 0.0000+000
WR        0.0000+000 3.6394+002 5.6306+002 8.4863+002 1.1642+003 1.1386+003 0.0000+000 1.8232+003 1.3883+003 8.5216+002
WR        1.9290+002 0.0000+000 2.8026+002 1.8574-001 0.0000+000
DD        2.2158+000 2.0386+000 2.0987+000 2.0989+000 2.1089+000 2.1087+000 2.0984+000 2.1080+000 2.0985+000 2.1082+000
DD        2.1175+000 2.1175+000 2.1075+000 2.0975+000-0.0000+000
YT        0.0000+000 0.0000+000 0.0000+000 0.0000+000 0.0000+000 0.0000+000 0.0000+000 0.0000+000 0.0000+000 0.0000+000
YT        0.0000+000 0.0000+000 0.0000+000 0.0000+000 6.1829-004 3.4350-003 8.9996-003 1.5732-002 2.2465-002 2.9197-002
YT        0.0000+000 0.0000+000 0.0000+000 0.0000+000 6.8699-004 3.7785-003 9.8927-003 1.7312-002 2.4732-002 3.2151-002
YT        0.0000+000 0.0000+000 0.0000+000 0.0000+000 8.2439-004 4.4654-003 1.1610-002 2.0266-002 2.8922-002 3.7578-002
YT        0.0000+000 0.0000+000 0.0000+000 0.0000+000 8.2439-004 4.4654-003 1.1610-002 2.0266-002 2.8922-002 3.7578-002
YT        0.0000+000 0.0000+000 0.0000+000 0.0000+000 6.8699-004 3.7098-003 9.6179-003 1.6763-002 2.3907-002 3.1052-002
YT        0.0000+000 0.0000+000 0.0000+000 2.7480-004 2.1984-003 8.7935-003 2.3770-002 5.0013-002 8.8759-002 1.4035-001
YT        0.0000+000 0.0000+000 0.0000+000 0.0000+000-1.0305-003-5.4959-003-1.6007-002-3.4693-002-6.2448-002-9.9270-002
YT        0.0000+000 0.0000+000 2.0610-004 1.2366-003 3.5724-003 7.0760-003 1.0854-002 1.3465-002 1.3877-002 1.1816-002
YT        0.0000+000 0.0000+000 2.7480-004 1.4427-003 5.2898-003 1.5183-002 3.4006-002 6.2860-002 1.0202-001 1.5176-001
YT        0.0000+000 0.0000+000 2.0610-004 9.6179-004 3.4350-003 1.0305-002 2.3770-002 4.3899-002 6.9730-002 1.0037-001
YT        0.0000+000 0.0000+000 0.0000+000 0.0000+000 5.4959-004 3.0228-003 8.5874-003 1.7450-002 2.9266-002 4.3693-002
YT        0.0000+000 0.0000+000 0.0000+000 0.0000+000 0.0000+000 0.0000+000 0.0000+000 0.0000+000 0.0000+000 0.0000+000
YT        0.0000+000 0.0000+000 0.0000+000 0.0000+000 0.0000+000 0.0000+000 0.0000+000 0.0000+000 0.0000+000 0.0000+000
YT        0.0000+000 0.0000+000 0.0000+000 0.0000+000 0.0000+000 0.0000+000 0.0000+000 0.0000+000 0.0000+000 0.0000+000
M,C   500  8.0000-001
Y           0.00000    0.00000    0.00000    0.00000    0.00000    0.00000    0.00000    0.00000    0.00000    0.00000
```

```
Y          2.21849   2.21684   2.21510   2.21328   2.21206   2.21302   2.21673   2.22161   2.22649   2.23137
Y          4.25736   4.25471   4.25205   4.24939   4.24741   4.24784   4.25129   4.25605   4.26081   4.26556
Y          6.35755   6.35439   6.35067   6.34660   6.34317   6.34253   6.34539   6.34976   6.35413   6.35850
Y          8.45713   8.45327   8.44866   8.44356   8.43903   8.43728   8.43903   8.44229   8.44555   8.44881
Y         10.56681  10.56244  10.55717  10.55130  10.54582  10.54263  10.54232  10.54326  10.54419  10.54512
Y         12.67681  12.67281  12.66756  12.66088  12.65370  12.64874  12.65008  12.66112  12.68362  12.71844
Y         14.78466  14.79026  14.79713  14.80555  14.81482  14.82271  14.82630  14.82302  14.81155  14.79144
Y         16.89409  16.89937  16.90575  16.91356  16.92297  16.93360  16.94450  16.95423  16.96177  16.96683
Y         18.99531  19.00170  19.00833  19.01468  19.02141  19.03107  19.04692  19.07075  19.10352  19.14618
Y         21.10458  21.11022  21.11640  21.12272  21.12963  21.13925  21.15397  21.17424  21.19947  21.22913
Y         23.22373  23.22851  23.23406  23.24014  23.24703  23.25589  23.26784  23.28309  23.30129  23.32211
Y         25.34284  25.34660  25.35139  25.35731  25.36449  25.37296  25.38253  25.39292  25.40385  25.41506
Y         27.45318  27.45716  27.46175  27.46675  27.47194  27.47717  27.48241  27.48764  27.49288  27.49811
Y         29.55288  29.55643  29.56049  29.56488  29.56945  29.57405  29.57864  29.58323  29.58783  29.59242
MODE   0  -2  -2  -2  -2  -2  30  30  -2  -5  -5  -3 -30  -2   2
ZF        3.0000-003 3.0000-003 3.0000-003 3.0000-003 3.1594-010-2.7670-005 7.8643-004 7.8643-004 3.0000-003 1.3194-004
ZF        1.3194-004 2.2136-005 5.4043-005 1.1224-008-2.4000-003
YFR          0.04037   2.25156   4.28549   6.37580   8.46210  10.63544  12.71844  14.88377  17.07320  19.14618
YFR         21.22907  23.32204  25.41505  27.51697  29.64500
YFL         -0.00000   2.19100   4.24537   6.33856   8.43149  10.53180  12.62810  14.79144  16.87444  19.03977
YFL         21.22920  23.32218  25.41507  27.49804  29.57105
ZL        2.0000-003-1.0240-003 1.3744-004 8.1920-004 3.3554-004-1.6000-003-1.6000-003 5.2429-004-2.1268-007-2.1268-007
ZL       -3.0949-006 5.6295-005 4.1538-007 3.6029-005-2.4520-009
YFLR         0.00000   2.20863   4.24433   6.34006   8.43578  10.54340  12.71651  14.81482  16.92276  19.02125
YFLR        21.12952  23.24696  25.36445  27.47193  30.55000
YFLL         0.00000   2.21548   4.25050   6.34628   8.44228  10.54824  12.65370  14.75077  16.92318  19.02157
YFLL        21.12973  23.24710  25.36452  27.47196  29.56945
PL        0.0000+000 0.0000+000 0.0000+000 0.0000+000 0.0000+000 0.0000+000 0.0000+000-1.2404+003 0.0000+000 0.0000+000
PL       -5.2682+002-6.1253+002-4.7969+002-1.3235-023 0.0000+000
PR        0.0000+000 0.0000+000 0.0000+000 0.0000+000 0.0000+000 0.0000+000 1.2710+003 0.0000+000 0.0000+000 7.4757+002
PR        9.7963+002 6.1237+002 8.2556+001 0.0000+000 0.0000+000
WL        0.0000+000-1.4260+002-3.8555+002-6.4740+002-9.4798+002-9.0820+002-2.3721+003 0.0000+000-1.5932+003-3.0883+003
WL       -2.1549+003-9.4327+002-3.4367+002-5.0507+002-3.0691+002
WR        0.0000+000 4.3185+002 6.4303+002 9.7208+002 1.3389+003 1.2904+003 0.0000+000 2.1186+003 1.4781+003 1.2410+003
WR        9.0055+002 6.5325+002 9.3499+002 2.0365+002 0.0000+000
DD        2.2155+000 2.0388+000 2.0989+000 2.0991+000 2.1091+000 2.1088+000 2.0985+000 2.1081+000 2.0986+000 2.1083+000
DD        2.1175+000 2.1175+000 2.1075+000 2.0975+000-0.0000+000
YT        0.0000+000 0.0000+000 0.0000+000 0.0000+000 0.0000+000 0.0000+000 0.0000+000 0.0000+000 0.0000+000 0.0000+000
YT        0.0000+000 0.0000+000 0.0000+000 0.0000+000 6.9558-004 3.8643-003 1.0125-002 1.7699-002 2.5273-002 3.2847-002
YT        0.0000+000 0.0000+000 0.0000+000 0.0000+000 7.7287-004 4.2508-003 1.1129-002 1.9476-002 2.7823-002 3.6170-002
YT        0.0000+000 0.0000+000 0.0000+000 0.0000+000 9.2744-004 5.0236-003 1.3061-002 2.2800-002 3.2538-002 4.2276-002
YT        0.0000+000 0.0000+000 0.0000+000 0.0000+000 9.2744-004 5.0236-003 1.3061-002 2.2800-002 3.2538-002 4.2276-002
YT        0.0000+000 0.0000+000 0.0000+000 0.0000+000 7.7287-004 4.1735-003 1.0820-002 1.8858-002 2.6896-002 3.4934-002
YT        0.0000+000 0.0000+000 0.0000+000 3.0915-004 2.4732-003 9.8927-003 2.6741-002 5.6265-002 9.9854-002 1.5790-001
YT        0.0000+000 0.0000+000 0.0000+000 0.0000+000-1.1593-003-6.1829-003-1.8008-002-3.9030-002-7.0254-002-1.1168-001
YT        0.0000+000 0.0000+000 2.3186-004 1.3912-003 4.0189-003 7.9605-003 1.2211-002 1.5148-002 1.5612-002 1.3293-002
YT        0.0000+000 0.0000+000 3.0915-004 1.6230-003 5.9511-003 1.7080-002 3.8257-002 7.0717-002 1.1477-001 1.7073-001
YT        0.0000+000 0.0000+000 2.3186-004 1.0820-003 3.8643-003 1.1593-002 2.6741-002 4.9386-002 7.8446-002 1.1292-001
YT        0.0000+000 0.0000+000 0.0000+000 0.0000+000 6.1829-004 3.4006-003 9.6608-003 1.9631-002 3.2924-002 4.9154-002
YT        0.0000+000 0.0000+000 0.0000+000 0.0000+000 0.0000+000 0.0000+000 0.0000+000 0.0000+000 0.0000+000 0.0000+000
YT        0.0000+000 0.0000+000 0.0000+000 0.0000+000 0.0000+000 0.0000+000 0.0000+000 0.0000+000 0.0000+000 0.0000+000
YT        0.0000+000 0.0000+000 0.0000+000 0.0000+000 0.0000+000 0.0000+000 0.0000+000 0.0000+000 0.0000+000 0.0000+000
M,Q    500  9.0000-001
Y            0.00000   0.00000   0.00000   0.00000   0.00000   0.00000   0.00000   0.00000   0.00000   0.00000
Y            2.21840   2.21660   2.21466   2.21263   2.21124   2.21232   2.21649   2.22197   2.22745   2.23294
Y            4.25710   4.25420   4.25130   4.24840   4.24627   4.24684   4.25082   4.25627   4.26171   4.26716
Y            6.35739   6.35394   6.34987   6.34539   6.34163   6.34100   6.34431   6.34932   6.35433   6.35934
Y            8.45691   8.45270   8.44764   8.44202   8.43704   8.43518   8.43727   8.44105   8.44483   8.44861
Y           10.56659  10.56183  10.55608  10.54966  10.54368  10.54027  10.54011  10.54134  10.54257  10.54379
Y           12.67682  12.67271  12.66709  12.65968  12.65144  12.64540  12.64617  12.65765  12.68190  12.71994
Y           14.78468  14.79042  14.79763  14.80675  14.81702  14.82600  14.83037  14.82718  14.81489  14.79294
Y           16.89431  16.89991  16.90671  16.91509  16.92525  16.93678  16.94863  16.95915  16.96721  16.97248
```

```
Y          18.99557   19.00260   19.00993   19.01681   19.02379   19.03358   19.04991   19.07490   19.10974   19.15560
Y          21.10507   21.11131   21.11808   21.12487   21.13211   21.14215   21.15772   21.17937   21.20648   21.23853
Y          23.22408   23.22933   23.23543   23.24207   23.24954   23.25913   23.27212   23.28875   23.30866   23.33149
Y          25.34309   25.34723   25.35256   25.35920   25.36727   25.37682   25.38762   25.39936   25.41173   25.42440
Y          27.45343   27.45781   27.46295   27.46866   27.47474   27.48105   27.48750   27.49407   27.50071   27.50739
Y          29.55322   29.55726   29.56192   29.56699   29.57227   29.57758   29.58289   29.58820   29.59351   29.59882
MODE   0  -2  -1  -2  -2  -2  30  30  -2  -5  -5   5  30  -3   2
ZF        3.0000-003 3.0000-003 3.0000-003 5.4043-005 4.2817-008-1.0555-004 7.8643-004 7.8643-004 3.0000-003 1.3194-004
ZF        2.0616-004 5.4043-005 8.4442-005 2.2136-005-2.4000-003
YFR          0.04193    2.25315    4.28638    6.37560    8.46078   10.63694   12.71994   14.88943   17.08261   19.15560
YFR         21.23845   23.33139   25.42435   27.52577   29.64500
YFL         -0.00000    2.19100    4.24693    6.34015    8.43238   10.53160   12.62678   14.79294   16.87594   19.04543
YFL         21.23861   23.33160   25.42445   27.50739   29.58035
ZL        2.0000-003-6.5536-004 1.3744-004 5.2429-004 5.2429-004-1.6000-003-1.6000-003 8.1920-004-1.8447-005-4.5036-005
ZL       -1.0995-004 5.6295-005 6.4904-007 2.1475-004-8.1130-007
YFLR         0.00000    2.20732    4.24260    6.33795    8.43316   10.54084   12.71867   14.81702   16.92496   19.02359
YFLR        21.13204   23.24974   25.36727   27.47474   30.55000
YFLL         0.00000    2.21516    4.24994    6.34530    8.44092   10.54653   12.65144   14.74851   16.92555   19.02398
YFLL        21.13217   23.24954   25.36704   27.47474   29.57227
PL        0.0000+000 0.0000+000 0.0000+000 0.0000+000 0.0000+000 0.0000+000 0.0000+000-1.5562+003 0.0000+000 0.0000+000
PL       -6.7363+002-9.3760+002-9.4799+002-5.9103+001 0.0000+000
PR        0.0000+000 0.0000+000 0.0000+000 8.2718-025-3.3087-024 0.0000+000 1.5934+003 0.0000+000 0.0000+000 9.5632+002
PR        1.2485+003 9.6547+002 4.9414+002 0.0000+000 0.0000+000
WL        0.0000+000-1.6323+002-4.5852+002-7.6571+002-1.1318+003-1.0668+003-3.0205+003 0.0000+000-2.1470+003-3.9317+003
WL       -2.1544+003-4.5300+002 0.0000+000-2.4715+002-3.7363+002
WR        0.0000+000 4.9548+002 7.6420+002 1.1474+003 1.5917+003 1.5062+003 0.0000+000 2.7503+003 2.0795+003 1.5447+003
WR        5.5756+002 0.0000+000 6.3761+002 8.2144+000 0.0000+000
DD        2.2152+000 2.0389+000 2.0990+000 2.0993+000 2.1093+000 2.1090+000 2.0987+000 2.1082+000 2.0988+000 2.1084+000
DD        2.1175+000 2.1175+000 2.1075+000 2.0975+000-0.0000+000
YT        0.0000+000 0.0000+000 0.0000+000 0.0000+000 0.0000+000 0.0000+000 0.0000+000 0.0000+000 0.0000+000 0.0000+000
YT        0.0000+000 0.0000+000 0.0000+000 0.0000+000 7.7287-004 4.2937-003 1.1249-002 1.9665-002 2.8081-002 3.6496-002
YT        0.0000+000 0.0000+000 0.0000+000 0.0000+000 8.5874-004 4.7231-003 1.2366-002 2.1640-002 3.0915-002 4.0189-002
YT        0.0000+000 0.0000+000 0.0000+000 0.0000+000 1.0305-003 5.5818-003 1.4513-002 2.5333-002 3.6153-002 4.6973-002
YT        0.0000+000 0.0000+000 0.0000+000 0.0000+000 1.0305-003 5.5818-003 1.4513-002 2.5333-002 3.6153-002 4.6973-002
YT        0.0000+000 0.0000+000 0.0000+000 0.0000+000 8.5874-004 4.6372-003 1.2022-002 2.0953-002 2.9884-002 3.8815-002
YT        0.0000+000 0.0000+000 0.0000+000 3.4350-004 2.7480-003 1.0992-002 2.9712-002 6.2516-002 1.1095-001 1.7544-001
YT        0.0000+000 0.0000+000 0.0000+000 0.0000+000-1.2881-003-6.8699-003-2.0009-002-4.3366-002-7.8059-002-1.2409-001
YT        0.0000+000 0.0000+000 2.5762-004 1.5457-003 4.4654-003 8.8450-003 1.3568-002 1.6831-002 1.7347-002 1.4770-002
YT        0.0000+000 0.0000+000 3.4350-004 1.8034-003 6.6123-003 1.8978-002 4.2508-002 7.8575-002 1.2752-001 1.8970-001
YT        0.0000+000 0.0000+000 2.5762-004 1.2022-003 4.2937-003 1.2881-002 2.9712-002 5.4873-002 8.7162-002 1.2546-001
YT        0.0000+000 0.0000+000 0.0000+000 0.0000+000 6.8699-004 3.7785-003 1.0734-002 2.1812-002 3.6582-002 5.4616-002
YT        0.0000+000 0.0000+000 0.0000+000 0.0000+000 0.0000+000 0.0000+000 0.0000+000 0.0000+000 0.0000+000 0.0000+000
YT        0.0000+000 0.0000+000 0.0000+000 0.0000+000 0.0000+000 0.0000+000 0.0000+000 0.0000+000 0.0000+000 0.0000+000
YT        0.0000+000 0.0000+000 0.0000+000 0.0000+000 0.0000+000 0.0000+000 0.0000+000 0.0000+000 0.0000+000 0.0000+000
M,C   500  1.0000+000
Y           0.00000    0.00000    0.00000    0.00000    0.00000    0.00000    0.00000    0.00000    0.00000    0.00000
Y           2.21814    2.21614    2.21404    2.21187    2.21045    2.21176    2.21651    2.22272    2.22893    2.23514
Y           4.25686    4.25371    4.25057    4.24743    4.24514    4.24586    4.25036    4.25649    4.26262    4.26875
Y           6.35722    6.35350    6.34908    6.34419    6.34009    6.33948    6.34325    6.34890    6.35456    6.36021
Y           8.45670    8.45215    8.44665    8.44052    8.43510    8.43315    8.43558    8.43990    8.44421    8.44853
Y          10.56637   10.56126   10.55505   10.54810   10.54165   10.53805   10.53806   10.53961   10.54116   10.54272
Y          12.67687   12.67269   12.66672   12.65858   12.64925   12.64206   12.64216   12.65396   12.67980   12.72091
Y          14.78453   14.79022   14.79762   14.80728   14.81845   14.82849   14.83366   14.83063   14.81760   14.79391
Y          16.89444   16.90022   16.90728   16.91603   16.92676   16.93899   16.95158   16.96270   16.97107   16.97636
Y          18.99668   19.00462   19.01244   19.01919   19.02539   19.03399   19.04925   19.07366   19.10871   19.15586
Y          21.10567   21.11259   21.11988   21.12681   21.13372   21.14309   21.15804   21.17932   21.20640   21.23883
Y          23.22452   23.23030   23.23687   23.24373   23.25110   23.26033   23.27289   23.28919   23.30891   23.33177
Y          25.34332   25.34777   25.35341   25.36031   25.36854   25.37810   25.38878   25.40029   25.41236   25.42471
Y          27.45366   27.45834   27.46379   27.46975   27.47599   27.48230   27.48863   27.49497   27.50132   27.50767
Y          29.55337   29.55762   29.56254   29.56791   29.57349   29.57912   29.58474   29.59036   29.59599   29.60161
MODE   0  -2  -1  -2  -2  -2  30  30  -2  -5  -5  -5  -5 -30  -3   2
ZF        3.0000-003 3.0000-003 3.0000-003 7.1836-009-3.1901-007-1.5360-003 1.2288-003 1.2288-003 3.0000-003 8.4442-005
```

ZF	8.4442-005	1.3154-004	2.2136-005	3.4588-005	-2.4000-003					
YFR	0.04392	2.25476	4.28721	6.37554	8.45970	10.63791	12.72091	14.89331	17.08289	19.15586
YFR	21.23877	23.33167	25.42465	27.52856	29.64500					
YFL	-0.00000	2.19100	4.24892	6.34176	8.43321	10.53154	12.62570	14.79391	16.87691	19.04931
YFL	21.23889	23.33186	25.42477	27.50767	29.58065					
ZL	2.0000-003	-4.1943-004	2.1475-004	8.1920-004	5.2429-004	-1.6000-003	-1.6000-003	8.1920-004	-2.2836-008	-7.0369-005
ZL	-8.7112-008	2.3058-005	1.0141-006	5.6295-005	-1.9807-006					
YFLR	0.00000	2.20604	4.24090	6.33583	8.43061	10.53848	12.72004	14.81845	16.92639	19.02514
YFLR	21.13358	23.25102	25.36849	27.47597	30.55000					
YFLL	0.00000	2.21485	4.24938	6.34435	8.43959	10.54481	12.64925	14.74645	16.92712	19.02564
YFLL	21.13385	23.25119	25.36858	27.47602	29.57349					
PL	0.0000+000	0.0000+000	0.0000+000	0.0000+000	0.0000+000	0.0000+000	0.0000+000	-1.9109+003	0.0000+000	0.0000+000
PL	-4.7526+002	-8.4875+002	-1.0099+003	-7.2204+000	0.0000+000					
PR	0.0000+000	0.0000+000	0.0000+000	-1.6544-024	0.0000+000	0.0000+000	1.9359+003	0.0000+000	0.0000+000	1.2297+003
PR	1.2832+003	1.0241+003	6.0444+002	0.0000+000	0.0000+000					
WL	0.0000+000	-1.8352+002	-5.3001+002	-8.8695+002	-1.3102+003	-1.1859+003	-3.7130+003	0.0000+000	-2.6061+003	-4.8813+003
WL	-3.2582+003	-1.5870+003	-4.1804+002	-6.2289+002	-4.0276+002					
WR	0.0000+000	5.5468+002	8.8335+002	1.3268+003	1.8371+003	1.6725+003	0.0000+000	3.4785+003	2.5847+003	1.9784+003
WR	1.1714+003	8.4652+002	9.5798+002	2.5898+002	0.0000+000					
CD	2.2149+000	2.0391+000	2.0992+000	2.0995+000	2.1095+000	2.1092+000	2.0988+000	2.1083+000	2.0989+000	2.1086+000
CD	2.1175+000	2.1175+000	2.1075+000	2.0975+000	-0.0000+000					

APPENDIX C

Reflector Heat-transfer Dynamics

1. Reflector Subassembly; Row 7

From Section III.B, the relation between row 7 differential temperature $\Delta T_7(s)$ and power $P(s)$ is

$$\frac{\Delta T_7(s)}{P(s)} = \frac{\theta_7 \mathrm{Hexin}(s) - \theta_7 \mathrm{Hexout}(s)}{P(s)}.$$

It is convenient to evaluate the above expression by evaluating the numerator terms separately and then combining them.

From Section III.B,

$$\frac{\theta_7 \mathrm{Hexin}(s)}{P(s)} = \frac{1}{1 + \tau_6 C s}\left\{K_1 - \frac{1.5R_1(K_1 - K_2R_{VR})}{2R_1 + R_{VR}} \frac{1 + sC_1(2R_2 + R_{VR})/[2(1 - K_2R_{VR}/K_1)]}{1 + sC_1(2R_2 + R_{VR} - R_{VR}^2)/2}\right\},$$

where the C's, R's, and K's are defined in Fig. 9.

The calculations will be based on a unit vertical slice of the subassembly, which is one element wide, as shown in Fig. 9A. The length again will be taken as 70 cm, as for the row 9 calculation in Appendix A. Since the element discharges approximately half its heat to the hexagon side and half towards the subassembly interior, one-half the element helps to determine the hexagon temperature.

Then,

$$C_1/2 = \frac{\pi}{2}(1.25/2)^2 \times 70 \times 7.7 \times 0.115 = 38 \text{ cal/°C},$$

$$R_1/2 = R_{hex}/2 + R_{film},$$

and

$$R_{hex}/2 = \frac{0.1/2}{0.048 \times 1.25 \times 70} = 0.012.$$

Assume $r_{film} \approx 0.008$. Then,

$$\frac{R_1}{2} \approx 0.012 + 0.008 = 0.020°\mathrm{C/cal\text{-}sec^{-1}}$$

and

$$2R_2 = \frac{2 \log_e [1.25/(0.707 \times 1.25)]}{2\pi \times 0.048 \times 70} = 0.026°C/\text{cal-sec}^{-1}.$$

From the row 9 calculation in Appendix A, one full element has $R_{VR} = 0.083$. The value for one-half element then is

$$R_{VR} = 2 \times 0.083 = 0.166°C/\text{cal-sec}^{-1}.$$

The radial constants are considered to be lumped at the average axial condition, which is taken as approximately half the outlet condition.

Then,

$$\theta_7 Cin = (168/2)(5/9) = 46.7°C \quad \text{(see Ref. 1, Fig. 5)}$$

and

$$Q(R_{VR}) = 46.7/0.166 = 281 \text{ cal/sec}.$$

The heat input per sodium channel in row 7 (six channels on the side of the subassembly in contact with row 6) is

$$Q_{in} = Q_{total}/6 \approx 3 \text{ kW} \times 238.9/6 \approx 119.4 \text{ cal/sec},$$

where Q_{total} is the radial heat flow from row 6 to row 7 per subassembly.

Then,

$$Q_0 = K_2 \times 45 = Q(R_{VR}) - Q_{in}$$

and

$$K_2 = (281 - 119)/45 = 3.60 \text{ cal/MW-sec}.$$

Similarly, for a row 7 average half-element facing row 8,

$$\theta_7 Hexout = (60/2)(5/9) = 16.7°C,$$

where 60°F is the average of the row 7 outer and row 8 inner channel temperatures of 81 and 43°F, respectively, explained in Ref. 1. Then,

$$Q_{00} = K_3 \times 45 = \frac{\theta_7 Hexout}{R_{VR}} = 100 \text{ cal/sec}$$

and

$$K_3 = \frac{16.7}{0.166 \times 45} = 2.20 \text{ cal/MW-sec.}$$

(We may treat row 7 outer and row 8 inner channels separately because a check of heat flow between these points indicates a flow of about 14 cal/sec, which is small compared to the value of Q_{00} above and the value for row 8, which will be seen in Section 2 of this appendix.)

Also,

$$\theta_{6C} = Q_{in} \times 2R_1 + \theta_{7Cin} = K_1 P,$$

$$K_1 = \frac{119.4 \times 2 \times 0.04 + 46.7}{45} = 1.24,$$

and

$$\theta_{6C} = \frac{1.24P}{1 + 0.19s},$$

where $\tau_{6C} = 0.19$ sec as in Appendix A, but with added transport time of 0.02 sec. To evaluate,

$$\frac{\theta_{7Hexin}(s)}{P(s)} = \left\{1.24 - \frac{0.156(1 + 14.1s)}{1 + 6.3s}\right\} \frac{1}{1 + \tau_{6C}s} = \frac{1.08(1+5.1s)}{(1+6.3s)(1+0.19s)}.$$

From Section III.B,

$$\frac{\theta_{7Hexout}(s)}{P(s)} = \frac{K_3 R_{VR}}{1 + \frac{sC_1(R_{VR} + 2R_2)}{2}},$$

To evaluate,

$$\frac{\theta_{7Hexout}(s)}{P(s)} = \frac{2.2 \times 0.166}{1 + 38s(0.166 + 0.026)} = \frac{0.365}{1 + 7.3s}.$$

Then,

$$\frac{\Delta T_7(s)}{P(s)} = \frac{1}{1 + 0.19s}\left\{\frac{1.08(1+5.1s)}{1 + 6.3s} - \frac{0.365}{1 + 7.3s}\right\}$$

Rewriting results in

$$\frac{\Delta T_7(s)}{P(s)} = \frac{0.72}{1 + 0.19s} \cdot \frac{(1+5.8s)(1+9.7s)}{(1+6.3s)(1+7.3s)}.$$

Also, to a good approximation,

$$\frac{\Delta T_7(s)}{P(s)} = \frac{0.72(1+9.7s)}{(1+0.19s)(1+7.3s)}.$$

2. Reflector Subassembly; Row 8

The calculations for row 8 are made in the same way as for row 7, noting that the heat source for row 8 is row 9, but for row 7 the source is row 6, and also noting that the R's and C's are identical to those above for row 7.

As before, the average temperature between rows 7 and 8 is

$$\theta_8 Hexin = (60/2)(5/9) = 16.7°C,$$

$$Q_{00} = K_6 \times 45 = \theta_8 Hexin/R_{VR} = 100 \text{ cal/sec},$$

$$K_6 = 16.7/(45 \times 0.166) = 2.22 \text{ cal/MW-sec},$$

$$\theta_8 Cout = (110/2)(5/9) = 30.6°C,$$

and

$$Q_{(R_{VR})} = 30.6/0.166 = 184 \text{ cal/sec}.$$

The input per sodium channel in row 8 (six channels on side of subassembly in contact with row 9) is

$$Q_{in} = Q_{total}/6 \approx 3 \text{ kW} \times 238.9/6 \approx 119.4 \text{ cal/sec}.$$

Then,

$$Q_0 = K_5 P = Q_{(R_{VR})} - Q_{in},$$

$$K_5 = (184 - 119)/45 = 1.44 \text{ cal/MW-sec},$$

$$\theta_9 C = Q_{in} \times 2R_1 + \theta_8 Cout = K_4 P,$$

and

$$K_4 = (119.4 \times 2 \times 0.04 + 30.6)/45$$

$$= 0.89 \text{ cal/MW-sec.}$$

From Section III.B,

$$\frac{\theta_{8Hexout}(s)}{P(s)} = \frac{1}{1 + \tau_{9C} s}\left\{K_4 - \frac{1.5R_1(K_4 - K_5R_{VR})}{2R_1 + R_{VR}} \frac{1 + sC_1(2R_2 + R_{VR})/[2(1 - K_5R_{VR}/K_4)]}{1 + sC_1(2R_2 + R_{VR} - R_{VR}^2)/2}\right\}.$$

To evaluate,

$$\frac{\theta_{8Hexout}(s)}{P(s)} = \frac{1}{1 + 6.2s}\left[0.89 - \frac{0.159(1 + 10.0s)}{1 + 6.3s}\right]$$

$$= \frac{0.73(1 + 5.5s)}{(1 + 6.3s)(1 + 6.2s)} \approx \frac{0.73}{1 + 6.3s}.$$

From Section III.B,

$$\frac{\theta_{8Hexin}(s)}{P(s)} = \frac{K_6R_{VR}}{1 + \frac{sC_1(R_{VR} + 2R_2)}{2}} = \frac{2.22 \times 0.166}{1 + 38s(0.166 + 0.026)} = \frac{0.37}{1 + 7.3s}.$$

From Section III.B,

$$\frac{\Delta T_8(s)}{P(s)} = \frac{\theta_{8Hexin}(s) - \theta_{8Hexout}(s)}{P(s)} = -\left(\frac{0.73}{1 + 6.3s} - \frac{0.37}{1 + 7.3s}\right)$$

$$= -\frac{0.36(1 + 8.4s)}{(1 + 7.3s)(1 + 6.3s)}.$$

The above results are in a form suitable for display in the log-log frequency domain. However, the time domain is more useful for computing temperature profiles with the PROFILE program. Therefore they are transformed into the time domain in Appendix D, which describes PROFILE.

APPENDIX D

PROFILE Temperature Calculations

The computer program PROFILE calculates the row dynamic temperature-time function C(t) using a specified rod-drop reactor power-time function as the input. An input like that in Fig. D.1 may be represented by an initial ramp with an exponential following the end of the ramp. The Laplace transform of such an input has the form

$$\frac{\Delta P}{P}(s) = \frac{\left(\frac{\Delta P}{P}\right)_{t_0}}{s^2}, \qquad t \le t_0;$$

$$\frac{\Delta P}{P}(s) = \frac{\left(\frac{\Delta P}{P}\right)_{t_0} \Big/ t_0}{s^2} - \exp(-t_0 s)\left[\frac{\left(\frac{\Delta P}{P}\right)_{t_0} \Big/ t_0}{s^2} - \frac{K}{\tau_K} \cdot \frac{1}{s\left(s + \frac{1}{\tau_K}\right)}\right], \qquad t > t_0.$$

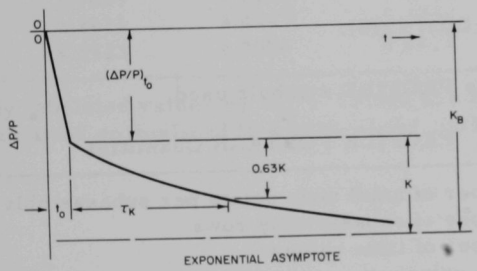

Fig. D.1
PROFILE Input Function

The function C(t) resulting when the above input is applied to a row transfer function will have two basic forms as shown in Section III.C. Slightly rearranged, these forms are

1. $$C(t) = C_0[t - \sigma_1 + \sigma_1 \exp(-t/\sigma_1)], \qquad t \le t_0;$$

$$C(t) = K_B + C_0\sigma_1[\exp(-t/\sigma_1) - \exp(-t'/\sigma_1)]$$

$$+ K\,\frac{\tau_K \exp(-t'/\tau_K) - \sigma_1 \exp(-t'/\sigma_1)}{\sigma_1 - \tau_K}, \qquad t > t_0$$

2. $$C(t) = C_0\left[t - \sigma_1 - \sigma_2 + \sigma_3 + \frac{\sigma_1(\sigma_1 - \sigma_3)\exp(-t/\sigma_1) - \sigma_2(\sigma_2 - \sigma_3)\exp(-t/\sigma_2)}{\sigma_1 - \sigma_2}\right],$$

$$t \le t_0$$

$$C(t) = K_B + C_0 \frac{\sigma_1(\sigma_1 - \sigma_3)[\exp(-t/\sigma_1) - \exp(-t'/\sigma_1)] - \sigma_2(\sigma_2 - \sigma_3)[\exp(-t/\sigma_2) - \exp(-t'/\sigma_2)]}{\sigma_1 - \sigma_2}$$

$$+ K\left[\frac{\sigma_1(\sigma_3 - \sigma_1)}{(\sigma_1 - \sigma_2)(\sigma_1 - \tau_K)} \exp(-t'/\sigma_1) + \frac{\sigma_2(\sigma_3 - \sigma_2)}{(\sigma_2 - \sigma_1)(\sigma_2 - \tau_K)} \exp(-t'/\sigma_2)\right.$$

$$\left. + \frac{\tau_K(\sigma_3 - \tau_K)}{(\tau_K - \sigma_1)(\tau_K - \sigma_2)} \exp(-t'/\tau_K)\right], \quad t > t_0.$$

Note that $t' = t - t_0$ in the above expressions. Also, the Type 2 row transfer function was

$$F(s) = \frac{1 + \sigma_3 s}{(1 + \sigma_1 s)(1 + \sigma_2 s)}.$$

The program then calculates temperature values for specified times and punches decks of cards for use with BOW III. Thus

$$T_\Delta(t) = (P/P_0)[1 + C(t)]\, T_\Delta(0).$$

Table V defines the PROFILE symbols used.

TABLE V. PROFILE FORTRAN Quantities

MI	Number of axial node points per subassembly
MJ	Number of subassembly rows
LT	Number of time values
T(I)	Time values, t
TO	t_0, time duration of input ramp
CO	C_0, slope of input ramp
AK	K, asymptotic value of input exponential
TK	τ_K, time constant of input exponential
P	P, starting power
PO	P_0, base power, = 45 MW
DPP	$(\Delta P/P)_{t_0}$, end value of ramp
NT(I)	Function-type, row I
S(I,J)	σ_1, σ_2, σ_3, row I time constants (see F(s) above)
DT(I,J)	Temperature difference across node I of row J for 45-MW equilibrium conditions, $T_\Delta(0)$

The following pages list the FORTRAN for PROFILE and the output for a typical run, in this case, the 41.4-MW rod drop made during reactor run 26B. The input quantities used appear in the INPUT REVIEW that follows the FORTRAN. Table VI gives C(t) values for rows 6-10, normalized to a base whose initial value is 1.0.

TABLE VI. C(t)[a] for Rows 6-10

Time	Row 6	7	8	9	10
0	0	0	0	0	0
0.1	0.4138	0.5492	0.0165	0.0149	0.0060
0.2	1.4194	1.8815	0.0656	0.0594	0.0239
0.4	3.2019	4.2257	0.2160	0.1965	0.0845
0.6	3.9126	5.1388	0.3587	0.3262	0.1383
0.8	4.2439	5.5443	0.5010	0.4559	0.1931
1.0	4.4415	5.7708	0.6429	0.5854	0.2488
2.0	5.0862	6.4428	1.3436	1.2296	0.5397
3.0	5.6492	7.0049	2.0263	1.8635	0.8485
4.0	6.1709	7.5132	2.6865	2.4826	1.1171
5.0	6.6546	7.9735	3.3213	3.0831	1.5048
6.0	7.1029	8.3907	3.9286	3.6625	1.8462
7.0	7.5186	8.7690	4.5073	4.2189	2.1929
8.0	7.9039	9.1126	5.0566	4.7511	2.5425
9.0	8.2611	9.4247	5.5765	5.2585	2.8931
10.0	8.5923	9.7086	6.0672	5.7407	3.2430

[a]Multiply tabulated values by 10^{-2}. Values are negative and represent the time variation normalized to a base whose initial value is 1.0.

```
*       PROGRAM PROFILE
        DIMENSION S(3,15),T(20),NT(15),C(15),DT(10,15),DT1(10,15)
       PAUSE
        READ 100,MI,MJ,LT
  100   FORMAT(12I6)
        READ 110,(T(I),I=1,LT)
  110   FORMAT(6E12.5)
        READ 130,T0,C0,AK,TK,P,P0,DPP
       AKB=(DPP*AK)
        DO 1 I=1,MJ
    1   READ 120,NT(I),(S(J,I),J=1,3)
  120   FORMAT(I6,3E12.6)
        READ 130,((DT(I,J),I=1,MI),J=1,MJ)
  130   FORMAT(8E10.4)
        PRINT 200
  200   FORMAT(13H1INPUT REVIEW//6X,1HP13X,2HT012X,2HC012X,1HK11X,
      1 6HTAU(K))
        PRINT 201,P,T0,C0,AK,TK
  201   FORMAT(1X,5(E12.6,2X))
        PRINT 202
  202   FORMAT(//7H NUMBER2X,4HTYPE6X,2HS112X,2HS212X,2HS3/)
        PRINT 203,(I,NT(I),(S(J,I),J=1,3),I=1,MJ)
  203   FORMAT(I5,I7,3(2X,E12.6))
        PRINT 204
  204   FORMAT(/28H1INITIAL TEMPERATURE PROFILE//)
        PRINT 205,((DT(I,J),I=1,MI),J=1,MJ)
  205   FORMAT(10(1X,E11.5))
        DO 2 I=1,LT
        T1=T(I)
        T2=T1-T0
        DO 3 J=1,MJ
        E11=EXPF(-T1/S(1,J))
        E12=EXPF(-T2/S(1,J))
        E21=EXPF(-T1/S(2,J))
        E22=EXPF(-T2/S(2,J))
        IF(T2) 50,50,52
   50   G=0.
        E=0.
        F0=T1-S(1,J)-S(2,J)+S(3,J)
        F1=S(1,J)*E11
        IF(NT(J)-1) 55,55,51
   51 F1=(F1*(S(1,J)-S(3,J))-S(2,J)*(S(2,J)-S(3,J))*E21)/(S(1,J)-S(2,J))
        GO TO 55
   52   F0=0.
       E=AKB
        F1=S(1,J)*(E11-E12)
        IF(NT(J)-1) 53,53,54
   53   G=(TK*EXPF(-T2/TK)-S(1,J)*E12)/(S(1,J)-TK)
        GO TO 55
   54   F1=(F1*(S(1,J)-S(3,J))-S(2,J)*(S(2,J)-S(3,J))*(E21-E22))/
      1 (S(1,J)-S(2,J))
        G=S(1,J)*(S(3,J)-S(1,J))*E12/((S(1,J)-S(2,J))*(S(1,J)-TK))
      1 +S(2,J)*(S(3,J)-S(2,J))*E22/((S(2,J)-S(1,J))*(S(2,J)-TK))
      2 +TK*(S(3,J)-TK)*EXPF(-T2/TK)/((TK-S(1,J))*(TK-S(2,J)))
   55 C(J)=E+(C0*(F0+F1)+AK*G)
        DO 3 K=1,MI
    3   DT1(K,J)=DT(K,J)*P*(1.+C(J))/P0
        PRINT 210,T1
  210   FORMAT(6H1TIME=F7.2//)
        PUNCH 215,T1
  215   FORMAT(9H*** TIME=F7.2)
        PRINT 205,((DT1(K,J),K=1,MI),J=1,MJ)
        PUNCH 130,((DT1(K,J),K=1,MI),J=1,MJ)
    2   CONTINUE
        END
```

MEMORY MAP

INTEGER VARIABLES

IDENT	LEVEL	OBJECT CODE LOCATION	UP SUBROUTINE
K	1	1 5244	1 2400
J	1	1 5470	1 2406
I	1	1 5526	1 2426
LT	1	1 5533	NOT USED
MJ	1	1 5535	NOT USED
MI	1	1 5537	NOT USED
IC	0	1 7775	1 2442

FLOATING POINT VARIABLES

IDENT	LEVEL	OBJECT CODE LOCATION
F1	1	1 5246
F0	1	1 5251
E	1	1 5254
G	1	1 5262
E22	1	1 5265
E21	1	1 5272
E12	1	1 5275
E11	1	1 5300
T2	1	1 5303
T1	1	1 5306
AKB	1	1 5472
DPP	1	1 5475
P0	1	1 5500
P	1	1 5503
TK	1	1 5506
AK	1	1 5511
C0	1	1 5514
T0	1	1 5517

INTEGER ARRAYS

IDENT	LEVEL	OBJECT CODE LOCATION	DIMENSION	DIM1	DIM2
NT	1	1 7422	1		

FLOATING POINT ARRAYS

IDENT	LEVEL	OBJECT CODE LOCATION	DIMENSION	DIM1	DIM2
DT1	1	1 5541	2	10	
DT	1	1 6443	2	10	
C	1	1 7345	1		
T	1	1 7460	1		
S	1	1 7554	2	3	

CONSTANTS

VALUE	OBJECT CODE LOCATION
0.10000000 E 01	1 5241
0.0	1 5257
2	1 5270
10	1 7763
20	1 7765
15	1 7767
3	1 7771
1	1 7773

STATEMENT NUMBERS

IDENT	LEVEL	OBJECT CODE LOCATION
54	1	1 1657
53	1	1 1627
51	1	1 1535
55	1	1 2027
52	1	1 1572
50	1	1 1466
3	1	1 2066
2	1	1 2312
1	1	1 0775
0	1	1 0650

FORMAT STATEMENTS

IDENT	LEVEL	OBJECT CODE LOCATION
215	1	1 5220
210	1	1 5231
205	1	1 5311
204	1	1 5320
203	1	1 5342
202	1	1 5354
201	1	1 5403
200	1	1 5413
120	1	1 5462
130	1	1 5456
110	1	1 5522
100	1	1 5530

LIBRARY FUNCTIONS

IDENT	LEVEL	OBJECT CODE LOCATION
(P5230		0 6740
(16120		0 7150
(R405I		0 7230
INPUT		1 0001
EXPF		1 0505

ERASABLE STORAGE 1 2453 TO 1 5220

INPUT REVIEW

P	T0	C0	K	TAU(K)
.414000E 02	.220000E 00	-.186000E 00	-.870000E-01	.132000E 02

NUMBER	TYPE	S1	S2	S3
1	1	.190000E 00	.000000E 00	.000000E 00
2	1	.190000E 00	.000000E 00	.000000E 00
3	1	.190000E 00	.000000E 00	.000000E 00
4	1	.190000E 00	.000000E 00	.000000E 00
5	1	.190000E 00	.000000E 00	.000000E 00
6	1	.190000E 00	.000000E 00	.000000E 00
7	3	.190000E 00	.730000E 01	.970000E 01
8	3	.630000E 01	.730000E 01	.820000E 01
9	1	.620000E 01	.000000E 00	.000000E 00
10	1	.155000E 02	.000000E 00	.000000E 00
11	1	.155000E 02	.000000E 00	.000000E 00
12	1	.155000E 02	.000000E 00	.000000E 00
13	1	.155000E 02	.000000E 00	.000000E 00
14	1	.155000E 02	.000000E 00	.000000E 00
15	1	.155000E 02	.000000E 00	.000000E 00

INITIAL TEMPERATURE PROFILE

1	2	3	4	5	6	7	8	9	10
.00000E 00	.00000E 00	.00000E 00	.00000E 00	.00000E 00	.00000E 00	.00000E 00	.00000E 00	.00000E 00	.00000E 00
.00000E 00	.00000E 00	.00000E 00	.00000E 00	.90000E 01	.23000E 02	.17000E 02	.00000E 00	.00000E 00	.00000E 00
.00000E 00	.00000E 00	.00000E 00	.00000E 00	.10000E 02	.25000E 02	.19000E 02	.00000E 00	.00000E 00	.00000E 00
.00000E 00	.00000E 00	.00000E 00	.00000E 00	.12000E 02	.29000E 02	.22000E 02	.00000E 00	.00000E 00	.00000E 00
.00000E 00	.00000E 00	.00000E 00	.00000E 00	.12000E 02	.29000E 02	.22000E 02	.00000E 00	.00000E 00	.00000E 00
.00000E 00	.00000E 00	.00000E 00	.00000E 00	.10000E 02	.24000E 02	.18000E 02	.00000E 00	.00000E 00	.00000E 00
.00000E 00	.00000E 00	.00000E 00	.40000E 01	.20000E 02	.48000E 02	.74000E 02	.90000E 02	.92000E 02	.95000E 02
.00000E 00	.00000E 00	.00000E 00	.00000E 00	-.15000E 02	-.35000E 02	-.53000E 02	-.66000E 02	-.66000E 02	-.66000E 02
.00000E 00	.00000E 00	.30000E 01	.90000E 01	.10000E 02	.70000E 01	-.30000E 01	-.14000E 02	-.18000E 02	-.18000E 02
.00000E 00	.00000E 00	.40000E 01	.90000E 01	.30000E 02	.58000E 02	.72000E 02	.74000E 02	.76000E 02	.78000E 02
.00000E 00	.00000E 00	.30000E 01	.50000E 01	.20000E 02	.44000E 02	.52000E 02	.45000E 02	.38000E 02	.32000E 02
.00000E 00	.00000E 00	.00000E 00	.00000E 00	.80000E 01	.20000E 02	.25000E 02	.23000E 02	.20000E 02	.18000E 02
.00000E 00	.00000E 00	.00000E 00	.00000E 00	.00000E 00	.00000E 00	.00000E 00	.00000E 00	.00000E 00	.00000E 00
.00000E 00	.00000E 00	.00000E 00	.00000E 00	.00000E 00	.00000E 00	.00000E 00	.00000E 00	.00000E 00	.00000E 00
.00000E 00	.00000E 00	.00000E 00	.00000E 00	.00000E 00	.00000E 00	.00000E 00	.00000E 00	.00000E 00	.00000E 00

TIME= .00

.00000E 00	.00000E 00	.00000E 00	.00000E 00	.00000E 00	.00000E 00	.00000E 00	.00000E 00	.00000E 00	.00000E 00
.00000E 00	.00000E 00	.00000E 00	.00000E 00	.82800E 01	.21160E 02	.15640E 02	.00000E 00	.00000E 00	.00000E 00
.00000E 00	.00000E 00	.00000E 00	.00000E 00	.92000E 01	.22999E 02	.17480E 02	.00000E 00	.00000E 00	.00000E 00
.00000E 00	.00000E 00	.00000E 00	.00000E 00	.11040E 02	.26679E 02	.20240E 02	.00000E 00	.00000E 00	.00000E 00
.00000E 00	.00000E 00	.00000E 00	.00000E 00	.11040E 02	.26679E 02	.20240E 02	.00000E 00	.00000E 00	.00000E 00
.00000E 00	.00000E 00	.00000E 00	.00000E 00	.92000E 01	.22080E 02	.16560E 02	.00000E 00	.00000E 00	.00000E 00
.00000E 00	.00000E 00	.00000E 00	.36799E 01	.18399E 02	.44159E 02	.68080E 02	.82799E 02	.84639E 02	.87399E 02
.00000E 00	.00000E 00	.00000E 00	.00000E 00	-.13800E 02	-.32200E 02	-.48760E 02	-.60720E 02	-.60720E 02	-.60720E 02
.00000E 00	.00000E 00	.27600E 01	.82800E 01	.92000E 01	.64400E 01	-.27600E 01	-.12880E 02	-.16560E 02	-.16560E 02
.00000E 00	.00000E 00	.36800E 01	.82800E 01	.27600E 02	.53360E 02	.66240E 02	.68080E 02	.69920E 02	.71760E 02
.00000E 00	.00000E 00	.27600E 01	.46000E 01	.18400E 02	.40480E 02	.47840E 02	.41400E 02	.34960E 02	.29440E 02
.00000E 00	.00000E 00	.00000E 00	.00000E 00	.73600E 01	.18400E 02	.22999E 02	.21160E 02	.18400E 02	.16560E 02
.00000E 00	.00000E 00	.00000E 00	.00000E 00	.00000E 00	.00000E 00	.00000E 00	.00000E 00	.00000E 00	.00000E 00
.00000E 00	.00000E 00	.00000E 00	.00000E 00	.00000E 00	.00000E 00	.00000E 00	.00000E 00	.00000E 00	.00000E 00
.00000E 00	.00000E 00	.00000E 00	.00000E 00	.00000E 00	.00000E 00	.00000E 00	.00000E 00	.00000E 00	.00000E 00

TIME= .10

.00000E 00	.00000E 00	.00000E 00	.00000E 00	.00000E 00	.00000E 00	.00000E 00	.00000E 00	.00000E 00	.00000E 00
.00000E 00	.00000E 00	.00000E 00	.00000E 00	.82457E 01	.21072E 02	.15575E 02	.00000E 00	.00000E 00	.00000E 00
.00000E 00	.00000E 00	.00000E 00	.00000E 00	.91619E 01	.22904E 02	.17407E 02	.00000E 00	.00000E 00	.00000E 00
.00000E 00	.00000E 00	.00000E 00	.00000E 00	.10994E 02	.26569E 02	.20156E 02	.00000E 00	.00000E 00	.00000E 00
.00000E 00	.00000E 00	.00000E 00	.00000E 00	.10994E 02	.26569E 02	.20156E 02	.00000E 00	.00000E 00	.00000E 00
.00000E 00	.00000E 00	.00000E 00	.00000E 00	.91619E 01	.21988E 02	.16491E 02	.00000E 00	.00000E 00	.00000E 00
.00000E 00	.00000E 00	.00000E 00	.36597E 01	.18298E 02	.43917E 02	.67706E 02	.82345E 02	.84175E 02	.86919E 02
.00000E 00	.00000E 00	.00000E 00	.00000E 00	-.13797E 02	-.32194E 02	-.48751E 02	-.60709E 02	-.60709E 02	-.60709E 02
.00000E 00	.00000E 00	.27595E 01	.82787E 01	.91986E 01	.64390E 01	-.27595E 01	-.12878E 02	-.16557E 02	-.16557E 02
.00000E 00	.00000E 00	.36797E 01	.82795E 01	.27598E 02	.53356E 02	.66236E 02	.68075E 02	.69915E 02	.71755E 02
.00000E 00	.00000E 00	.27598E 01	.45997E 01	.18398E 02	.40477E 02	.47837E 02	.41397E 02	.34957E 02	.29438E 02
.00000E 00	.00000E 00	.00000E 00	.00000E 00	.73595E 01	.18398E 02	.22998E 02	.21158E 02	.18398E 02	.16559E 02
.00000E 00	.00000E 00	.00000E 00	.00000E 00	.00000E 00	.00000E 00	.00000E 00	.00000E 00	.00000E 00	.00000E 00
.00000E 00	.00000E 00	.00000E 00	.00000E 00	.00000E 00	.00000E 00	.00000E 00	.00000E 00	.00000E 00	.00000E 00
.00000E 00	.00000E 00	.00000E 00	.00000E 00	.00000E 00	.00000E 00	.00000E 00	.00000E 00	.00000E 00	.00000E 00

TIME= .20

.00000E 00	.00000E 00	.00000E 00	.00000E 00	.00000E 00	.00000E 00	.00000E 00	.00000E 00	.00000E 00	.00000E 00
.00000E 00	.00000E 00	.00000E 00	.00000E 00	.81624E 01	.20859E 02	.15418E 02	.00000E 00	.00000E 00	.00000E 00
.00000E 00	.00000E 00	.00000E 00	.00000E 00	.90694E 01	.22673E 02	.17231E 02	.00000E 00	.00000E 00	.00000E 00
.00000E 00	.00000E 00	.00000E 00	.00000E 00	.10883E 02	.26301E 02	.19952E 02	.00000E 00	.00000E 00	.00000E 00
.00000E 00	.00000E 00	.00000E 00	.00000E 00	.10883E 02	.26301E 02	.19952E 02	.00000E 00	.00000E 00	.00000E 00
.00000E 00	.00000E 00	.00000E 00	.00000E 00	.90694E 01	.21766E 02	.16324E 02	.00000E 00	.00000E 00	.00000E 00
.00000E 00	.00000E 00	.00000E 00	.36107E 01	.18053E 02	.43329E 02	.66799E 02	.81242E 02	.83047E 02	.85755E 02
.00000E 00	.00000E 00	.00000E 00	.00000E 00	-.13790E 02	-.32178E 02	-.48728E 02	-.60680E 02	-.60680E 02	-.60680E 02
.00000E 00	.00000E 00	.27583E 01	.82750E 01	.91945E 01	.64361E 01	-.27583E 01	-.12872E 02	-.16550E 02	-.16550E 02
.00000E 00	.00000E 00	.36791E 01	.82780E 01	.27593E 02	.53347E 02	.66224E 02	.68063E 02	.69903E 02	.71742E 02
.00000E 00	.00000E 00	.27593E 01	.45989E 01	.18395E 02	.40470E 02	.47828E 02	.41390E 02	.34951E 02	.29432E 02
.00000E 00	.00000E 00	.00000E 00	.00000E 00	.73582E 01	.18395E 02	.22994E 02	.21154E 02	.18395E 02	.16556E 02
.00000E 00	.00000E 00	.00000E 00	.00000E 00	.00000E 00	.00000E 00	.00000E 00	.00000E 00	.00000E 00	.00000E 00
.00000E 00	.00000E 00	.00000E 00	.00000E 00	.00000E 00	.00000E 00	.00000E 00	.00000E 00	.00000E 00	.00000E 00
.00000E 00	.00000E 00	.00000E 00	.00000E 00	.00000E 00	.00000E 00	.00000E 00	.00000E 00	.00000E 00	.00000E 00

TIME= .40

.00000E 00	.00000E 00	.00000E 00	.00000E 00	.00000E 00	.00000E 00	.00000E 00	.00000E 00	.00000E 00	.00000E 00
.00000E 00	.00000E 00	.00000E 00	.00000E 00	.80148E 01	.20482E 02	.15139E 02	.00000E 00	.00000E 00	.00000E 00
.00000E 00	.00000E 00	.00000E 00	.00000E 00	.89054E 01	.22263E 02	.16920E 02	.00000E 00	.00000E 00	.00000E 00
.00000E 00	.00000E 00	.00000E 00	.00000E 00	.10686E 02	.25825E 02	.19591E 02	.00000E 00	.00000E 00	.00000E 00
.00000E 00	.00000E 00	.00000E 00	.00000E 00	.10686E 02	.25825E 02	.19591E 02	.00000E 00	.00000E 00	.00000E 00
.00000E 00	.00000E 00	.00000E 00	.00000E 00	.89054E 01	.21373E 02	.16029E 02	.00000E 00	.00000E 00	.00000E 00
.00000E 00	.00000E 00	.00000E 00	.35244E 01	.17622E 02	.42293E 02	.65203E 02	.79301E 02	.81063E 02	.83706E 02
.00000E 00	.00000E 00	.00000E 00	.00000E 00	-.13770E 02	-.32130E 02	-.48654E 02	-.60588E 02	-.60588E 02	-.60588E 02
.00000E 00	.00000E 00	.27545E 01	.82637E 01	.91819E 01	.64273E 01	-.27545E 01	-.12854E 02	-.16527E 02	-.16527E 02
.00000E 00	.00000E 00	.36768E 01	.82730E 01	.27576E 02	.53314E 02	.66184E 02	.68022E 02	.69860E 02	.71699E 02
.00000E 00	.00000E 00	.27576E 01	.45961E 01	.18384E 02	.40445E 02	.47799E 02	.41365E 02	.34930E 02	.29415E 02
.00000E 00	.00000E 00	.00000E 00	.00000E 00	.73537E 01	.18384E 02	.22980E 02	.21142E 02	.18384E 02	.16546E 02
.00000E 00	.00000E 00	.00000E 00	.00000E 00	.00000E 00	.00000E 00	.00000E 00	.00000E 00	.00000E 00	.00000E 00
.00000E 00	.00000E 00	.00000E 00	.00000E 00	.00000E 00	.00000E 00	.00000E 00	.00000E 00	.00000E 00	.00000E 00
.00000E 00	.00000E 00	.00000E 00	.00000E 00	.00000E 00	.00000E 00	.00000E 00	.00000E 00	.00000E 00	.00000E 00

TIME= .60

.00000E 00	.00000E 00	.00000E 00	.00000E 00	.00000E 00	.00000E 00	.00000E 00	.00000E 00	.00000E 00	.00000E 00
.00000E 00	.00000E 00	.00000E 00	.00000E 00	.79560E 01	.20332E 02	.15028E 02	.00000E 00	.00000E 00	.00000E 00
.00000E 00	.00000E 00	.00000E 00	.00000E 00	.88400E 01	.22100E 02	.16796E 02	.00000E 00	.00000E 00	.00000E 00
.00000E 00	.00000E 00	.00000E 00	.00000E 00	.10608E 02	.25636E 02	.19448E 02	.00000E 00	.00000E 00	.00000E 00
.00000E 00	.00000E 00	.00000E 00	.00000E 00	.10608E 02	.25636E 02	.19448E 02	.00000E 00	.00000E 00	.00000E 00
.00000E 00	.00000E 00	.00000E 00	.00000E 00	.88400E 01	.21216E 02	.15912E 02	.00000E 00	.00000E 00	.00000E 00
.00000E 00	.00000E 00	.00000E 00	.34908E 01	.17454E 02	.41890E 02	.64581E 02	.78545E 02	.80290E 02	.82908E 02
.00000E 00	.00000E 00	.00000E 00	.00000E 00	-.13750E 02	-.32084E 02	-.48585E 02	-.60502E 02	-.60502E 02	-.60502E 02
.00000E 00	.00000E 00	.27509E 01	.82529E 01	.91699E 01	.64189E 01	-.27509E 01	-.12837E 02	-.16505E 02	-.16505E 02
.00000E 00	.00000E 00	.36749E 01	.82685E 01	.27561E 02	.53286E 02	.66148E 02	.67985E 02	.69823E 02	.71660E 02
.00000E 00	.00000E 00	.27561E 01	.45936E 01	.18374E 02	.40424E 02	.47773E 02	.41342E 02	.34911E 02	.29399E 02
.00000E 00	.00000E 00	.00000E 00	.00000E 00	.73498E 01	.18374E 02	.22968E 02	.21130E 02	.18374E 02	.16537E 02
.00000E 00	.00000E 00	.00000E 00	.00000E 00	.00000E 00	.00000E 00	.00000E 00	.00000E 00	.00000E 00	.00000E 00
.00000E 00	.00000E 00	.00000E 00	.00000E 00	.00000E 00	.00000E 00	.00000E 00	.00000E 00	.00000E 00	.00000E 00
.00000E 00	.00000E 00	.00000E 00	.00000E 00	.00000E 00	.00000E 00	.00000E 00	.00000E 00	.00000E 00	.00000E 00

TIME= ,80

,00000E 00	,00000E 00	,00000E 00	,00000E 00	,00000E 00	,00000E 00	,00000E 00	,00000E 00	,00000E 00	,00000E 00	,00000E 00
,00000E 00	,00000E 00	,00000E 00	,00000E 00	,79286E 01	,20261E 02	,14976E 02	,00000E 00	,00000E 00	,00000E 00	,00000E 00
,00000E 00	,00000E 00	,00000E 00	,00000E 00	,88095E 01	,22023E 02	,16738E 02	,00000E 00	,00000E 00	,00000E 00	,00000E 00
,00000E 00	,00000E 00	,00000E 00	,00000E 00	,10571E 02	,25547E 02	,19381E 02	,00000E 00	,00000E 00	,00000E 00	,00000E 00
,00000E 00	,00000E 00	,00000E 00	,00000E 00	,10571E 02	,25547E 02	,19381E 02	,00000E 00	,00000E 00	,00000E 00	,00000E 00
,00000E 00	,00000E 00	,00000E 00	,00000E 00	,88095E 01	,21142E 02	,15857E 02	,00000E 00	,00000E 00	,00000E 00	,00000E 00
,00000E 00	,00000E 00	,00000E 00	,34759E 01	,17379E 02	,41711E 02	,64305E 02	,78209E 02	,79947E 02	,82554E 02	
,00000E 00	,00000E 00	,00000E 00	,00000E 00	-,13730E 02	-,32038E 02	-,48515E 02	-,60415E 02	-,60415E 02	-,60415E 02	
,00000E 00	,00000E 00	,27474E 01	,82422E 01	,91580E 01	,64106E 01	-,27474E 01	-,12821E 02	-,16484E 02	-,16484E 02	
,00000E 00	,00000E 00	,36728E 01	,82640E 01	,27546E 02	,53256E 02	,66112E 02	,67948E 02	,69784E 02	,71621E 02	
,00000E 00	,00000E 00	,27546E 01	,45911E 01	,18364E 02	,40401E 02	,47747E 02	,41320E 02	,34892E 02	,29383E 02	
,00000E 00	,00000E 00	,00000E 00	,00000E 00	,73457E 01	,18364E 02	,22955E 02	,21119E 02	,18364E 02	,16528E 02	
,00000E 00	,00000E 00	,00000E 00	,00000E 00	,00000E 00	,00000E 00	,00000E 00	,00000E 00	,00000E 00	,00000E 00	
,00000E 00	,00000E 00	,00000E 00	,00000E 00	,00000E 00	,00000E 00	,00000E 00	,00000E 00	,00000E 00	,00000E 00	
,00000E 00	,00000E 00	,00000E 00	,00000E 00	,00000E 00	,00000E 00	,00000E 00	,00000E 00	,00000E 00	,00000E 00	

TIME= 1,00

,00000E 00	,00000E 00	,00000E 00	,00000E 00	,00000E 00	,00000E 00	,00000E 00	,00000E 00	,00000E 00	,00000E 00	,00000E 00
,00000E 00	,00000E 00	,00000E 00	,00000E 00	,79122E 01	,20220E 02	,14945E 02	,00000E 00	,00000E 00	,00000E 00	,00000E 00
,00000E 00	,00000E 00	,00000E 00	,00000E 00	,87913E 01	,21978E 02	,16703E 02	,00000E 00	,00000E 00	,00000E 00	,00000E 00
,00000E 00	,00000E 00	,00000E 00	,00000E 00	,10549E 02	,25494E 02	,19341E 02	,00000E 00	,00000E 00	,00000E 00	,00000E 00
,00000E 00	,00000E 00	,00000E 00	,00000E 00	,10549E 02	,25494E 02	,19341E 02	,00000E 00	,00000E 00	,00000E 00	,00000E 00
,00000E 00	,00000E 00	,00000E 00	,00000E 00	,87913E 01	,21099E 02	,15824E 02	,00000E 00	,00000E 00	,00000E 00	,00000E 00
,00000E 00	,00000E 00	,00000E 00	,34676E 01	,17338E 02	,41611E 02	,64151E 02	,78021E 02	,79755E 02	,82356E 02	
,00000E 00	,00000E 00	,00000E 00	,00000E 00	-,13711E 02	-,31992E 02	-,48446E 02	-,60329E 02	-,60329E 02	-,60329E 02	
,00000E 00	,00000E 00	,27438E 01	,82315E 01	,91461E 01	,64022E 01	-,27438E 01	-,12804E 02	-,16463E 02	-,16463E 02	
,00000E 00	,00000E 00	,36708E 01	,82594E 01	,27531E 02	,53227E 02	,66075E 02	,67910E 02	,69746E 02	,71581E 02	
,00000E 00	,00000E 00	,27531E 01	,45885E 01	,18354E 02	,40379E 02	,47720E 02	,41297E 02	,34873E 02	,29366E 02	
,00000E 00	,00000E 00	,00000E 00	,00000E 00	,73416E 01	,18354E 02	,22942E 02	,21107E 02	,18354E 02	,16518E 02	
,00000E 00	,00000E 00	,00000E 00	,00000E 00	,00000E 00	,00000E 00	,00000E 00	,00000E 00	,00000E 00	,00000E 00	
,00000E 00	,00000E 00	,00000E 00	,00000E 00	,00000E 00	,00000E 00	,00000E 00	,00000E 00	,00000E 00	,00000E 00	
,00000E 00	,00000E 00	,00000E 00	,00000E 00	,00000E 00	,00000E 00	,00000E 00	,00000E 00	,00000E 00	,00000E 00	

TIME= 2,00

,00000E 00	,00000E 00	,00000E 00	,00000E 00	,00000E 00	,00000E 00	,00000E 00	,00000E 00	,00000E 00	,00000E 00	,00000E 00
,00000E 00	,00000E 00	,00000E 00	,00000E 00	,78588E 01	,20083E 02	,14844E 02	,00000E 00	,00000E 00	,00000E 00	,00000E 00
,00000E 00	,00000E 00	,00000E 00	,00000E 00	,87320E 01	,21830E 02	,16590E 02	,00000E 00	,00000E 00	,00000E 00	,00000E 00
,00000E 00	,00000E 00	,00000E 00	,00000E 00	,10478E 02	,25322E 02	,19210E 02	,00000E 00	,00000E 00	,00000E 00	,00000E 00
,00000E 00	,00000E 00	,00000E 00	,00000E 00	,10478E 02	,25322E 02	,19210E 02	,00000E 00	,00000E 00	,00000E 00	,00000E 00
,00000E 00	,00000E 00	,00000E 00	,00000E 00	,87320E 01	,20956E 02	,15717E 02	,00000E 00	,00000E 00	,00000E 00	,00000E 00
,00000E 00	,00000E 00	,00000E 00	,34429E 01	,17214E 02	,41314E 02	,63693E 02	,77465E 02	,79186E 02	,81768E 02	
,00000E 00	,00000E 00	,00000E 00	,00000E 00	-,13614E 02	-,31767E 02	-,48104E 02	-,59904E 02	-,59904E 02	-,59904E 02	
,00000E 00	,00000E 00	,27260E 01	,81781E 01	,90868E 01	,63608E 01	-,27260E 01	-,12721E 02	-,16356E 02	-,16356E 02	
,00000E 00	,00000E 00	,36601E 01	,82353E 01	,27451E 02	,53072E 02	,65882E 02	,67712E 02	,69542E 02	,71372E 02	
,00000E 00	,00000E 00	,27451E 01	,45751E 01	,18300E 02	,40261E 02	,47581E 02	,41176E 02	,34771E 02	,29281E 02	
,00000E 00	,00000E 00	,00000E 00	,00000E 00	,73202E 01	,18300E 02	,22875E 02	,21045E 02	,18300E 02	,16470E 02	
,00000E 00	,00000E 00	,00000E 00	,00000E 00	,00000E 00	,00000E 00	,00000E 00	,00000E 00	,00000E 00	,00000E 00	
,00000E 00	,00000E 00	,00000E 00	,00000E 00	,00000E 00	,00000E 00	,00000E 00	,00000E 00	,00000E 00	,00000E 00	
,00000E 00	,00000E 00	,00000E 00	,00000E 00	,00000E 00	,00000E 00	,00000E 00	,00000E 00	,00000E 00	,00000E 00	

TIME= 3.00

.00000E 00	.00000E 00	.00000E 00	.00000E 00	.00000E 00	.00000E 00	.00000E 00	.00000E 00	.00000E 00	.00000E 00
.00000E 00	.00000E 00	.00000E 00	.00000E 00	.78122E 01	.19964E 02	.14756E 02	.00000E 00	.00000E 00	.00000E 00
.00000E 00	.00000E 00	.00000E 00	.00000E 00	.86802E 01	.21700E 02	.16492E 02	.00000E 00	.00000E 00	.00000E 00
.00000E 00	.00000E 00	.00000E 00	.00000E 00	.10416E 02	.25172E 02	.19096E 02	.00000E 00	.00000E 00	.00000E 00
.00000E 00	.00000E 00	.00000E 00	.00000E 00	.10416E 02	.25172E 02	.19096E 02	.00000E 00	.00000E 00	.00000E 00
.00000E 00	.00000E 00	.00000E 00	.00000E 00	.86802E 01	.20832E 02	.15624E 02	.00000E 00	.00000E 00	.00000E 00
.00000E 00	.00000E 00	.00000E 00	.34222E 01	.17111E 02	.41066E 02	.63311E 02	.76999E 02	.78710E 02	.81277E 02
.00000E 00	.00000E 00	.00000E 00	.00000E 00	-.13520E 02	-.31547E 02	-.47771E 02	-.59489E 02	-.59489E 02	-.59489E 02
.00000E 00	.00000E 00	.27085E 01	.81256E 01	.90285E 01	.63199E 01	-.27085E 01	-.12639E 02	-.16251E 02	-.16251E 02
.00000E 00	.00000E 00	.36487E 01	.82097E 01	.27365E 02	.52907E 02	.65677E 02	.67502E 02	.69326E 02	.71151E 02
.00000E 00	.00000E 00	.27365E 01	.45609E 01	.18243E 02	.40136E 02	.47434E 02	.41048E 02	.34663E 02	.29190E 02
.00000E 00	.00000E 00	.00000E 00	.00000E 00	.72975E 01	.18243E 02	.22804E 02	.20980E 02	.18243E 02	.16419E 02
.00000E 00	.00000E 00	.00000E 00	.00000E 00	.00000E 00	.00000E 00	.00000E 00	.00000E 00	.00000E 00	.00000E 00
.00000E 00	.00000E 00	.00000E 00	.00000E 00	.00000E 00	.00000E 00	.00000E 00	.00000E 00	.00000E 00	.00000E 00
.00000E 00	.00000E 00	.00000E 00	.00000E 00	.00000E 00	.00000E 00	.00000E 00	.00000E 00	.00000E 00	.00000E 00

TIME= 4.00

.00000E 00	.00000E 00	.00000E 00	.00000E 00	.00000E 00	.00000E 00	.00000E 00	.00000E 00	.00000E 00	.00000E 00
.00000E 00	.00000E 00	.00000E 00	.00000E 00	.77690E 01	.19854E 02	.14674E 02	.00000E 00	.00000E 00	.00000E 00
.00000E 00	.00000E 00	.00000E 00	.00000E 00	.86322E 01	.21580E 02	.16401E 02	.00000E 00	.00000E 00	.00000E 00
.00000E 00	.00000E 00	.00000E 00	.00000E 00	.10358E 02	.25033E 02	.18990E 02	.00000E 00	.00000E 00	.00000E 00
.00000E 00	.00000E 00	.00000E 00	.00000E 00	.10358E 02	.25033E 02	.18990E 02	.00000E 00	.00000E 00	.00000E 00
.00000E 00	.00000E 00	.00000E 00	.00000E 00	.86322E 01	.20717E 02	.15538E 02	.00000E 00	.00000E 00	.00000E 00
.00000E 00	.00000E 00	.00000E 00	.34035E 01	.17017E 02	.40842E 02	.62964E 02	.76579E 02	.78280E 02	.80833E 02
.00000E 00	.00000E 00	.00000E 00	.00000E 00	-.13429E 02	-.31334E 02	-.47450E 02	-.59088E 02	-.59088E 02	-.59088E 02
.00000E 00	.00000E 00	.26914E 01	.80744E 01	.89715E 01	.62801E 01	-.26914E 01	-.12560E 02	-.16148E 02	-.16148E 02
.00000E 00	.00000E 00	.36368E 01	.81830E 01	.27276E 02	.52735E 02	.65464E 02	.67282E 02	.69101E 02	.70919E 02
.00000E 00	.00000E 00	.27276E 01	.45461E 01	.18184E 02	.40005E 02	.47279E 02	.40915E 02	.34550E 02	.29095E 02
.00000E 00	.00000E 00	.00000E 00	.00000E 00	.72737E 01	.18184E 02	.22730E 02	.20912E 02	.18184E 02	.16366E 02
.00000E 00	.00000E 00	.00000E 00	.00000E 00	.00000E 00	.00000E 00	.00000E 00	.00000E 00	.00000E 00	.00000E 00
.00000E 00	.00000E 00	.00000E 00	.00000E 00	.00000E 00	.00000E 00	.00000E 00	.00000E 00	.00000E 00	.00000E 00
.00000E 00	.00000E 00	.00000E 00	.00000E 00	.00000E 00	.00000E 00	.00000E 00	.00000E 00	.00000E 00	.00000E 00

TIME= 5.00

.00000E 00	.00000E 00	.00000E 00	.00000E 00	.00000E 00	.00000E 00	.00000E 00	.00000E 00	.00000E 00	.00000E 00
.00000E 00	.00000E 00	.00000E 00	.00000E 00	.77289E 01	.19751E 02	.14599E 02	.00000E 00	.00000E 00	.00000E 00
.00000E 00	.00000E 00	.00000E 00	.00000E 00	.85877E 01	.21469E 02	.16316E 02	.00000E 00	.00000E 00	.00000E 00
.00000E 00	.00000E 00	.00000E 00	.00000E 00	.10305E 02	.24904E 02	.18893E 02	.00000E 00	.00000E 00	.00000E 00
.00000E 00	.00000E 00	.00000E 00	.00000E 00	.10305E 02	.24904E 02	.18893E 02	.00000E 00	.00000E 00	.00000E 00
.00000E 00	.00000E 00	.00000E 00	.00000E 00	.85877E 01	.20610E 02	.15457E 02	.00000E 00	.00000E 00	.00000E 00
.00000E 00	.00000E 00	.00000E 00	.33865E 01	.16932E 02	.40638E 02	.62651E 02	.76197E 02	.77891E 02	.80431E 02
.00000E 00	.00000E 00	.00000E 00	.00000E 00	-.13341E 02	-.31130E 02	-.47140E 02	-.58703E 02	-.58703E 02	-.58703E 02
.00000E 00	.00000E 00	.26749E 01	.80247E 01	.89163E 01	.62414E 01	-.26749E 01	-.12482E 02	-.16049E 02	-.16049E 02
.00000E 00	.00000E 00	.36246E 01	.81553E 01	.27184E 02	.52557E 02	.65243E 02	.67055E 02	.68867E 02	.70680E 02
.00000E 00	.00000E 00	.27184E 01	.45307E 01	.18123E 02	.39870E 02	.47120E 02	.40776E 02	.34433E 02	.28996E 02
.00000E 00	.00000E 00	.00000E 00	.00000E 00	.72492E 01	.18123E 02	.22653E 02	.20841E 02	.18123E 02	.16310E 02
.00000E 00	.00000E 00	.00000E 00	.00000E 00	.00000E 00	.00000E 00	.00000E 00	.00000E 00	.00000E 00	.00000E 00
.00000E 00	.00000E 00	.00000E 00	.00000E 00	.00000E 00	.00000E 00	.00000E 00	.00000E 00	.00000E 00	.00000E 00
.00000E 00	.00000E 00	.00000E 00	.00000E 00	.00000E 00	.00000E 00	.00000E 00	.00000E 00	.00000E 00	.00000E 00

TIME= 6.00

.00000E 00	.00000E 00	.00000E 00	.00000E 00	.00000E 00	.00000E 00	.00000E 00	.00000E 00	.00000E 00	.00000E 00	.00000E 00
.00000E 00	.00000E 00	.00000E 00	.00000E 00	.76918E 01	.19657E 02	.14529E 02	.00000E 00	.00000E 00	.00000E 00	.00000E 00
.00000E 00	.00000E 00	.00000E 00	.00000E 00	.85465E 01	.21366E 02	.16238E 02	.00000E 00	.00000E 00	.00000E 00	.00000E 00
.00000E 00	.00000E 00	.00000E 00	.00000E 00	.10255E 02	.24784E 02	.18802E 02	.00000E 00	.00000E 00	.00000E 00	.00000E 00
.00000E 00	.00000E 00	.00000E 00	.00000E 00	.10255E 02	.24784E 02	.18802E 02	.00000E 00	.00000E 00	.00000E 00	.00000E 00
.00000E 00	.00000E 00	.00000E 00	.00000E 00	.85465E 01	.20511E 02	.15383E 02	.00000E 00	.00000E 00	.00000E 00	.00000E 00
.00000E 00	.00000E 00	.00000E 00	.33712E 01	.16856E 02	.40454E 02	.62367E 02	.75852E 02	.77538E 02	.80066E 02	
.00000E 00	.00000E 00	.00000E 00	.00000E 00	-.13257E 02	-.30934E 02	-.46844E 02	-.58334E 02	-.58334E 02	-.58334E 02	
.00000E 00	.00000E 00	.26589E 01	.79767E 01	.88630E 01	.62041E 01	-.26589E 01	-.12408E 02	-.15953E 02	-.15953E 02	
.00000E 00	.00000E 00	.36120E 01	.81271E 01	.27090E 02	.52374E 02	.65017E 02	.66823E 02	.68629E 02	.70435E 02	
.00000E 00	.00000E 00	.27090E 01	.45150E 01	.18060E 02	.39732E 02	.46956E 02	.40635E 02	.34314E 02	.28896E 02	
.00000E 00	.00000E 00	.00000E 00	.00000E 00	.72241E 01	.18060E 02	.22575E 02	.20769E 02	.18060E 02	.16254E 02	
.00000E 00	.00000E 00	.00000E 00	.00000E 00	.00000E 00	.00000E 00	.00000E 00	.00000E 00	.00000E 00	.00000E 00	
.00000E 00	.00000E 00	.00000E 00	.00000E 00	.00000E 00	.00000E 00	.00000E 00	.00000E 00	.00000E 00	.00000E 00	
.00000E 00	.00000E 00	.00000E 00	.00000E 00	.00000E 00	.00000E 00	.00000E 00	.00000E 00	.00000E 00	.00000E 00	

TIME= 7.00

.00000E 00	.00000E 00	.00000E 00	.00000E 00	.00000E 00	.00000E 00	.00000E 00	.00000E 00	.00000E 00	.00000E 00	.00000E 00
.00000E 00	.00000E 00	.00000E 00	.00000E 00	.76574E 01	.19569E 02	.14464E 02	.00000E 00	.00000E 00	.00000E 00	.00000E 00
.00000E 00	.00000E 00	.00000E 00	.00000E 00	.85082E 01	.21270E 02	.16165E 02	.00000E 00	.00000E 00	.00000E 00	.00000E 00
.00000E 00	.00000E 00	.00000E 00	.00000E 00	.10209E 02	.24674E 02	.18718E 02	.00000E 00	.00000E 00	.00000E 00	.00000E 00
.00000E 00	.00000E 00	.00000E 00	.00000E 00	.10209E 02	.24674E 02	.18718E 02	.00000E 00	.00000E 00	.00000E 00	.00000E 00
.00000E 00	.00000E 00	.00000E 00	.00000E 00	.85082E 01	.20419E 02	.15314E 02	.00000E 00	.00000E 00	.00000E 00	.00000E 00
.00000E 00	.00000E 00	.00000E 00	.33572E 01	.16786E 02	.40287E 02	.62109E 02	.75539E 02	.77217E 02	.79735E 02	
.00000E 00	.00000E 00	.00000E 00	.00000E 00	-.13177E 02	-.30748E 02	-.46562E 02	-.57983E 02	-.57983E 02	-.57983E 02	
.00000E 00	.00000E 00	.26435E 01	.79304E 01	.88118E 01	.61683E 01	-.26435E 01	-.12336E 02	-.15861E 02	-.15861E 02	
.00000E 00	.00000E 00	.35993E 01	.80984E 01	.26994E 02	.52189E 02	.64787E 02	.66587E 02	.68386E 02	.70186E 02	
.00000E 00	.00000E 00	.26994E 01	.44991E 01	.17996E 02	.39592E 02	.46790E 02	.40492E 02	.34193E 02	.28794E 02	
.00000E 00	.00000E 00	.00000E 00	.00000E 00	.71986E 01	.17996E 02	.22495E 02	.20695E 02	.17996E 02	.16196E 02	
.00000E 00	.00000E 00	.00000E 00	.00000E 00	.00000E 00	.00000E 00	.00000E 00	.00000E 00	.00000E 00	.00000E 00	
.00000E 00	.00000E 00	.00000E 00	.00000E 00	.00000E 00	.00000E 00	.00000E 00	.00000E 00	.00000E 00	.00000E 00	
.00000E 00	.00000E 00	.00000E 00	.00000E 00	.00000E 00	.00000E 00	.00000E 00	.00000E 00	.00000E 00	.00000E 00	

TIME= 8.00

.00000E 00	.00000E 00	.00000E 00	.00000E 00	.00000E 00	.00000E 00	.00000E 00	.00000E 00	.00000E 00	.00000E 00	.00000E 00
.00000E 00	.00000E 00	.00000E 00	.00000E 00	.76255E 01	.19487E 02	.14403E 02	.00000E 00	.00000E 00	.00000E 00	.00000E 00
.00000E 00	.00000E 00	.00000E 00	.00000E 00	.84728E 01	.21182E 02	.16098E 02	.00000E 00	.00000E 00	.00000E 00	.00000E 00
.00000E 00	.00000E 00	.00000E 00	.00000E 00	.10167E 02	.24571E 02	.18640E 02	.00000E 00	.00000E 00	.00000E 00	.00000E 00
.00000E 00	.00000E 00	.00000E 00	.00000E 00	.10167E 02	.24571E 02	.18640E 02	.00000E 00	.00000E 00	.00000E 00	.00000E 00
.00000E 00	.00000E 00	.00000E 00	.00000E 00	.84728E 01	.20334E 02	.15251E 02	.00000E 00	.00000E 00	.00000E 00	.00000E 00
.00000E 00	.00000E 00	.00000E 00	.33446E 01	.16723E 02	.40135E 02	.61876E 02	.75254E 02	.76927E 02	.79435E 02	
.00000E 00	.00000E 00	.00000E 00	.00000E 00	-.13102E 02	-.30571E 02	-.46294E 02	-.57649E 02	-.57649E 02	-.57649E 02	
.00000E 00	.00000E 00	.26288E 01	.78866E 01	.87628E 01	.61340E 01	-.26288E 01	-.12268E 02	-.15773E 02	-.15773E 02	
.00000E 00	.00000E 00	.35864E 01	.80694E 01	.26898E 02	.52003E 02	.64555E 02	.66349E 02	.68142E 02	.69935E 02	
.00000E 00	.00000E 00	.26898E 01	.44830E 01	.17932E 02	.39450E 02	.46623E 02	.40347E 02	.34071E 02	.28691E 02	
.00000E 00	.00000E 00	.00000E 00	.00000E 00	.71728E 01	.17932E 02	.22415E 02	.20621E 02	.17932E 02	.16138E 02	
.00000E 00	.00000E 00	.00000E 00	.00000E 00	.00000E 00	.00000E 00	.00000E 00	.00000E 00	.00000E 00	.00000E 00	
.00000E 00	.00000E 00	.00000E 00	.00000E 00	.00000E 00	.00000E 00	.00000E 00	.00000E 00	.00000E 00	.00000E 00	
.00000E 00	.00000E 00	.00000E 00	.00000E 00	.00000E 00	.00000E 00	.00000E 00	.00000E 00	.00000E 00	.00000E 00	

TIME= 9.00

.00000E 00	.00000E 00	.00000E 00	.00000E 00	.00000E 00	.00000E 00	.00000E 00	.00000E 00	.00000E 00	.00000E 00
.00000E 00	.00000E 00	.00000E 00	.00000E 00	.75959E 01	.19411E 02	.14347E 02	.00000E 00	.00000E 00	.00000E 00
.00000E 00	.00000E 00	.00000E 00	.00000E 00	.84399E 01	.21099E 02	.16035E 02	.00000E 00	.00000E 00	.00000E 00
.00000E 00	.00000E 00	.00000E 00	.00000E 00	.10127E 02	.24475E 02	.18567E 02	.00000E 00	.00000E 00	.00000E 00
.00000E 00	.00000E 00	.00000E 00	.00000E 00	.10127E 02	.24475E 02	.18567E 02	.00000E 00	.00000E 00	.00000E 00
.00000E 00	.00000E 00	.00000E 00	.00000E 00	.84399E 01	.20255E 02	.15191E 02	.00000E 00	.00000E 00	.00000E 00
.00000E 00	.00000E 00	.00000E 00	.33331E 01	.16665E 02	.39998E 02	.61663E 02	.74996E 02	.76662E 02	.79162E 02
.00000E 00	.00000E 00	.00000E 00	.00000E 00	-.13030E 02	-.30404E 02	-.46040E 02	-.57333E 02	-.57333E 02	-.57333E 02
.00000E 00	.00000E 00	.26148E 01	.78445E 01	.87162E 01	.61013E 01	-.26148E 01	-.12202E 02	-.15689E 02	-.15689E 02
.00000E 00	.00000E 00	.35735E 01	.80404E 01	.26801E 02	.51816E 02	.64323E 02	.66110E 02	.67897E 02	.69683E 02
.00000E 00	.00000E 00	.26801E 01	.44669E 01	.17867E 02	.39308E 02	.46455E 02	.40202E 02	.33948E 02	.28588E 02
.00000E 00	.00000E 00	.00000E 00	.00000E 00	.71470E 01	.17867E 02	.22334E 02	.20547E 02	.17867E 02	.16080E 02
.00000E 00	.00000E 00	.00000E 00	.00000E 00	.00000E 00	.00000E 00	.00000E 00	.00000E 00	.00000E 00	.00000E 00
.00000E 00	.00000E 00	.00000E 00	.00000E 00	.00000E 00	.00000E 00	.00000E 00	.00000E 00	.00000E 00	.00000E 00
.00000E 00	.00000E 00	.00000E 00	.00000E 00	.00000E 00	.00000E 00	.00000E 00	.00000E 00	.00000E 00	.00000E 00

TIME= 10.00

.00000E 00	.00000E 00	.00000E 00	.00000E 00	.00000E 00	.00000E 00	.00000E 00	.00000E 00	.00000E 00	.00000E 00
.00000E 00	.00000E 00	.00000E 00	.00000E 00	.75685E 01	.19341E 02	.14296E 02	.00000E 00	.00000E 00	.00000E 00
.00000E 00	.00000E 00	.00000E 00	.00000E 00	.84095E 01	.21023E 02	.15978E 02	.00000E 00	.00000E 00	.00000E 00
.00000E 00	.00000E 00	.00000E 00	.00000E 00	.10091E 02	.24387E 02	.18500E 02	.00000E 00	.00000E 00	.00000E 00
.00000E 00	.00000E 00	.00000E 00	.00000E 00	.10091E 02	.24387E 02	.18500E 02	.00000E 00	.00000E 00	.00000E 00
.00000E 00	.00000E 00	.00000E 00	.00000E 00	.84095E 01	.20182E 02	.15137E 02	.00000E 00	.00000E 00	.00000E 00
.00000E 00	.00000E 00	.00000E 00	.33227E 01	.16613E 02	.39872E 02	.61470E 02	.74761E 02	.76422E 02	.78914E 02
.00000E 00	.00000E 00	.00000E 00	.00000E 00	-.12962E 02	-.30246E 02	-.45801E 02	-.57035E 02	-.57035E 02	-.57035E 02
.00000E 00	.00000E 00	.26015E 01	.78046E 01	.86718E 01	.60702E 01	-.26015E 01	-.12140E 02	-.15609E 02	-.15609E 02
.00000E 00	.00000E 00	.35606E 01	.80114E 01	.26704E 02	.51629E 02	.64091E 02	.65872E 02	.67652E 02	.69432E 02
.00000E 00	.00000E 00	.26704E 01	.44508E 01	.17803E 02	.39167E 02	.46288E 02	.40057E 02	.33826E 02	.28485E 02
.00000E 00	.00000E 00	.00000E 00	.00000E 00	.71213E 01	.17803E 02	.22254E 02	.20473E 02	.17803E 02	.16022E 02
.00000E 00	.00000E 00	.00000E 00	.00000E 00	.00000E 00	.00000E 00	.00000E 00	.00000E 00	.00000E 00	.00000E 00
.00000E 00	.00000E 00	.00000E 00	.00000E 00	.00000E 00	.00000E 00	.00000E 00	.00000E 00	.00000E 00	.00000E 00
.00000E 00	.00000E 00	.00000E 00	.00000E 00	.00000E 00	.00000E 00	.00000E 00	.00000E 00	.00000E 00	.00000E 00

APPENDIX E

DYNAMIC Reactivity Calculations

The computer program DYNAMIC calculates the reactivity time function C(t) of each component on Fig. 12 with up to two denominator roots in the transfer function of the component and using a specified rod-drop reactor power-time function as the input. An input like that in Fig. D.1, which was used in Appendix D, is also used here. The function C(t) resulting when the Laplace-transformed input is applied to the component transfer function has two basic forms depending upon whether there are one or two denominator roots in the transfer function. These forms are:

Form 1

$$C(t) = PCC_0[t - \sigma_1 + \sigma_1 \exp(-t/\sigma_1)], \qquad t < t_0;$$

$$C(t) = PC\left\{C_0 + \sigma_1[\exp(-t/\sigma_1) - \exp(-t'/\sigma_1)] + K\left[1 + \frac{\tau_K \exp(-t'/\tau_k - \sigma_1 \exp(-t'/\sigma_1)}{\sigma_1 - \tau_k}\right]\right\}, \qquad t \geq t_0.$$

Form 2

$$C(t) = PCC_0\left(t - \sigma_1 - \sigma_2 + \frac{\sigma_2^2 \exp(-t/\sigma_2) - \sigma_1^2 \exp(-t/\sigma_1)}{\sigma_2 - \sigma_1}\right), \qquad t < t_0;$$

$$C(t) = PC\left\{C_0\left[t_0 + \frac{\sigma_2^2[\exp(-t/\sigma_2) - \exp(-t'/\sigma_2)] - \sigma_1^2[\exp(-t/\sigma_1) - \exp(-t'/\sigma_1)]}{\sigma_2 - \sigma_1}\right] + K\left[1 - \frac{\tau_K^2 \exp(-t'/\tau_K)}{(\tau_K - \sigma_1)(\tau_K - \sigma_2)} - \frac{\sigma_1^2 \exp(-t'/\sigma_1)}{(\sigma_1 - \sigma_2)(\sigma_1 - \tau_K)} - \frac{\sigma_2^2 \exp(-t'/\sigma_2)}{(\sigma_1 - \sigma_2)(\sigma_2 - \tau_K)}\right]\right\}, \qquad t \geq t_0.$$

Note that $t' = t - t_0$ in the above expressions.

Table VII lists DYNAMIC FORTRAN quantities.

TABLE VII. DYNAMIC FORTRAN Quantities

NC	Number of components to be evaluated	AK	K, asymptotic value of input exponential
NS	Number of component subtotals to be calculated	TK	τ_K, time constant of input exponential
LT	Number of time values	P	P, starting power
NS1(I)	Initial number of components in subtotal I	BCD(J,I)	18-character BCD identifier for component I
NS2(I)	Final number of components in subtotal I	NT(I)	Function type for component I
T(I)	Time values	S(J,I)	σ_1, σ_2 component I time constants
TO	t_0, time duration of input ramp	C(I)	C component I multiplier in $/MW
CO	C_0, slope of input ramp		

The following pages list the FORTRAN for DYNAMIC and the output for a typical run, in this case the 41.4-MW rod drop made during reactor run 26B. The input quantities used appear in the INPUT REVIEW which follows the FORTRAN. The various outputs in dollars versus time are plotted in Fig. 13.

```
* PROGRAM DYNAMIC
      DIMENSION S(2,10),T(20),SUM(20),BCD(3,10),NS1(5),NS2(5),NT(10),
     1 C(10),DK(10)
      READ 100,NC,NS,LT,(NS1(I),NS2(I),I=1,NS)
  100 FORMAT(12I6)
      READ 110,(T(I),I=1,LT)
      READ 110,T0,C0,AK,TK,P
  110 FORMAT(6E12.5)
      DO 1 I=1,NC
    1 READ 120,(BCD(J,I),J=1,3),NT(I),(S(J,I),J=1,2),C(I)
  120 FORMAT(3A6,I6,3E12.6)
      PRINT 200
  200 FORMAT(13H1INPUT REVIEW//6X,1HP13X,2HT012X,2HC012X,1HK11X,
     1 6HTAU(K))
      PRINT 201,P,T0,C0,AK,TK
  201 FORMAT(1X,5(E12.6,2X))
      PRINT 202
  202 FORMAT(//7H NUMBER7X,5HTITLE8X,4HTYPE6X,2HS110X,2HS215X,2HC /)
      PRINT 203,(I,(BCD(J,I),J=1,3),NT(I),(S(J,I),J=1,2),C(I),I=1,NC)
  203 FORMAT(3X,I2,3X,3A6,2X,I2,2(2X,E12.6),5X,E12.6)
      DO 2 I=1,LT
      T1=T(I)
      T2=T1-T0
      SUM(I)=0.
      DO 3 J=1,NC
      E11=EXPF(-T1/S(1,J))
      E12=EXPF(-T2/S(1,J))
      E21=EXPF(-T1/S(2,J))
      E22=EXPF(-T2/S(2,J))
      IF(T2) 50,50,52
   50 G=0.
      F0=T1-S(1,J)-S(2,J)
      F1=S(1,J)*E11
      IF(NT(J)-1) 55,55,51
   51 F1=(-S(1,J)*F1+S(2,J)**2*E21)/(S(2,J)-S(1,J))
      GO TO 55
   52 F0=T0
      F1=S(1,J)*(E11-E12)
      IF(NT(J)-1) 53,53,54
   53 G=1.+(TK*EXPF(-T2/TK)-S(1,J)*E12)/(S(1,J)-TK)
      GO TO 55
   54 F1=(-S(1,J)*F1+S(2,J)**2*(E21-E22))/(S(2,J)-S(1,J))
      G=1.-TK**2*EXPF(-T2/TK)/((TK-S(1,J))*(TK-S(2,J)))
     1 -S(1,J)**2*E12/((S(1,J)-S(2,J))*(S(1,J)-TK)) -S(2,J)**2*E22/
     2 ((S(2,J)-S(1,J))*(S(2,J)-TK))
   55 DK(J)=C(J)*(C0*(F0+F1)+AK*G)*P
    3 SUM(I)=SUM(I)+DK(J)
      PRINT 210,T1
  210 FORMAT(6H1TIME=F7.2//)
      PRINT 220,(J,(BCD(K,J),K=1,3),DK(J),J=1,NC)
  220 FORMAT(14H COMPONENT NO.I2,5X,3A6,E12.6,8H DOLLARS)
      PRINT 230,SUM(I)
  230 FORMAT(/15X,15HCOMBINED EFFECT5X,E12.6,8H DOLLARS)
      IF(NS) 2,2,56
   56 PRINT 240
  240 FORMAT(///10H SUBTOTALS/)
      DO 4 J=1,NS
      N1=NS1(J)
      N2=NS2(J)
      SM=0.
      DO 5 K=N1,N2
    5 SM=SM+DK(K)
    4 PRINT 250,N1,N2,SM
  250 FORMAT(5X,10HCOMPONENTSI2,3H TOI2,5X,E12.6,8H DOLLARS)
    2 CONTINUE
      PRINT 260
  260 FORMAT(18H1REVIEW OF RESULTS//)
      PRINT 270,(T(I),SUM(I),I=1,LT)
  270 FORMAT(10X,2HT=E12.6,5X,E12.6,8H DOLLARS)
      END
```

INPUT REVIEW

P	T0	C0	K	TAU(K)
.414000E 02	.220000E 00	-.186000E 00	-.870000E-01	.132000E 02

NUMBER	TITLE	TYPE	S1	S2	C
1	AXIAL FUEL EXP.	1	.170000E 00	.000000E 00	.365000E-02
2	CORE NA EXP.	1	.190000E 00	.000000E 00	.135000E-02
3	ABOVE-CORE NA EXP.	2	.190000E 00	.700000E-01	.135000E-02
4	ROD-BANK EXP., L1	2	.190000E 00	.900000E-01	.540000E-03
5	ROD-BANK EXP., L2	2	.149000E 01	.930000E-01	.160000E-03
6	ROD-BANK EXP., L3	2	.149000E 01	.210000E 02	.160000E-03
7	ROD-BANK EXP., L4	2	.149000E 01	.810000E 01	.160000E-03

TIME= .10

COMPONENT NO. 1	AXIAL FUEL EXP.	-.685856E-03 DOLLARS
COMPONENT NO. 2	CORE NA EXP.	-.231277E-03 DOLLARS
COMPONENT NO. 3	ABOVE-CORE NA EXP.	-.825386E-04 DOLLARS
COMPONENT NO. 4	ROD-BANK EXP., L1	-.274693E-04 DOLLARS
COMPONENT NO. 5	ROD-BANK EXP., L2	-.113584E-05 DOLLARS
COMPONENT NO. 6	ROD-BANK EXP., L3	-.587493E-08 DOLLARS
COMPONENT NO. 7	ROD-BANK EXP., L4	-.164498E-07 DOLLARS

COMBINED EFFECT -.102829E-02 DOLLARS

SUBTOTALS

COMPONENTS 2 TO 3	-.313815E-03 DOLLARS
COMPONENTS 4 TO 7	-.286275E-04 DOLLARS

TIME= .20

COMPONENT NO. 1	AXIAL FUEL EXP.	-.231659E-02 DOLLARS
COMPONENT NO. 2	CORE NA EXP.	-.793319E-03 DOLLARS
COMPONENT NO. 3	ABOVE-CORE NA EXP.	-.443381E-03 DOLLARS
COMPONENT NO. 4	ROD-BANK EXP., L1	-.154759E-03 DOLLARS
COMPONENT NO. 5	ROD-BANK EXP., L2	-.721110E-05 DOLLARS
COMPONENT NO. 6	ROD-BANK EXP., L3	-.502307E-07 DOLLARS
COMPONENT NO. 7	ROD-BANK EXP., L4	-.130717E-06 DOLLARS

COMBINED EFFECT -.371544E-02 DOLLARS

SUBTOTALS

COMPONENTS 2 TO 3	-.123670E-02 DOLLARS
COMPONENTS 4 TO 7	-.162151E-03 DOLLARS

TIME= .40

COMPONENT NO. 1	AXIAL FUEL EXP.	-.504876E-02 DOLLARS
COMPONENT NO. 2	CORE NA EXP.	-.178507E-02 DOLLARS
COMPONENT NO. 3	ABOVE-CORE NA EXP.	-.149866E-02 DOLLARS
COMPONENT NO. 4	ROD-BANK EXP., L1	-.561477E-03 DOLLARS
COMPONENT NO. 5	ROD-BANK EXP., L2	-.340613E-04 DOLLARS
COMPONENT NO. 6	ROD-BANK EXP., L3	-.355643E-06 DOLLARS
COMPONENT NO. 7	ROD-BANK EXP., L4	-.914782E-06 DOLLARS

COMBINED EFFECT -.892931E-02 DOLLARS

SUBTOTALS

COMPONENTS 2 TO 3	-.328373E-02 DOLLARS
COMPONENTS 4 TO 7	-.596809E-03 DOLLARS

TIME= .60

COMPONENT NO. 1	AXIAL FUEL EXP.	-.603721E-02 DOLLARS
COMPONENT NO. 2	CORE NA EXP.	-.218228E-02 DOLLARS
COMPONENT NO. 3	ABOVE-CORE NA EXP.	-.205710E-02 DOLLARS
COMPONENT NO. 4	ROD-BANK EXP., L1	-.801544E-03 DOLLARS
COMPONENT NO. 5	ROD-BANK EXP., L2	-.641313E-04 DOLLARS
COMPONENT NO. 6	ROD-BANK EXP., L3	-.950763E-06 DOLLARS
COMPONENT NO. 7	ROD-BANK EXP., L4	-.243467E-05 DOLLARS

COMBINED EFFECT -.111456E-01 DOLLARS

SUBTOTALS

COMPONENTS 2 TO 3 -.423938E-02 DOLLARS
COMPONENTS 4 TO 7 -.869061E-03 DOLLARS

TIME= .80

COMPONENT NO. 1	AXIAL FUEL EXP.	-.647568E-02 DOLLARS
COMPONENT NO. 2	CORE NA EXP.	-.236745E-02 DOLLARS
COMPONENT NO. 3	ABOVE-CORE NA EXP.	-.230701E-02 DOLLARS
COMPONENT NO. 4	ROD-BANK EXP., L1	-.912658E-03 DOLLARS
COMPONENT NO. 5	ROD-BANK EXP., L2	-.921391E-04 DOLLARS
COMPONENT NO. 6	ROD-BANK EXP., L3	-.180825E-05 DOLLARS
COMPONENT NO. 7	ROD-BANK EXP., L4	-.460526E-05 DOLLARS

COMBINED EFFECT -.121613E-01 DOLLARS

SUBTOTALS

COMPONENTS 2 TO 3 -.467446E-02 DOLLARS
COMPONENTS 4 TO 7 -.101121E-02 DOLLARS

TIME= 1.00

COMPONENT NO. 1	AXIAL FUEL EXP.	-.674254E-02 DOLLARS
COMPONENT NO. 2	CORE NA EXP.	-.247792E-02 DOLLARS
COMPONENT NO. 3	ABOVE-CORE NA EXP.	-.244078E-02 DOLLARS
COMPONENT NO. 4	ROD-BANK EXP., L1	-.970831E-03 DOLLARS
COMPONENT NO. 5	ROD-BANK EXP., L2	-.117760E-03 DOLLARS
COMPONENT NO. 6	ROD-BANK EXP., L3	-.290059E-05 DOLLARS
COMPONENT NO. 7	ROD-BANK EXP., L4	-.734888E-05 DOLLARS

COMBINED EFFECT -.127600E-01 DOLLARS

SUBTOTALS

COMPONENTS 2 TO 3	-.491871E-02 DOLLARS
COMPONENTS 4 TO 7	-.109884E-02 DOLLARS

TIME= 2.00

COMPONENT NO. 1	AXIAL FUEL EXP.	-.769190E-02 DOLLARS
COMPONENT NO. 2	CORE NA EXP.	-.283825E-02 DOLLARS
COMPONENT NO. 3	ABOVE-CORE NA EXP.	-.281521E-02 DOLLARS
COMPONENT NO. 4	ROD-BANK EXP., L1	-.112342E-02 DOLLARS
COMPONENT NO. 5	ROD-BANK EXP., L2	-.217944E-03 DOLLARS
COMPONENT NO. 6	ROD-BANK EXP., L3	-.111780E-04 DOLLARS
COMPONENT NO. 7	ROD-BANK EXP., L4	-.275755E-04 DOLLARS

COMBINED EFFECT -.147255E-01 DOLLARS

SUBTOTALS

COMPONENTS 2 TO 3	-.565347E-02 DOLLARS
COMPONENTS 4 TO 7	-.138012E-02 DOLLARS

TIME= 3.00

COMPONENT NO. 1	AXIAL FUEL EXP.	-.854109E-02 DOLLARS
COMPONENT NO. 2	CORE NA EXP.	-.315290E-02 DOLLARS
COMPONENT NO. 3	ABOVE-CORE NA EXP.	-.313159E-02 DOLLARS
COMPONENT NO. 4	ROD-BANK EXP., L1	-.125018E-02 DOLLARS
COMPONENT NO. 5	ROD-BANK EXP., L2	-.287864E-03 DOLLARS
COMPONENT NO. 6	ROD-BANK EXP., L3	-.228192E-04 DOLLARS
COMPONENT NO. 7	ROD-BANK EXP., L4	-.547931E-04 DOLLARS

COMBINED EFFECT -.164412E-01 DOLLARS

SUBTOTALS

COMPONENTS 2 TO 3	-.628449E-02 DOLLARS
COMPONENTS 4 TO 7	-.161566E-02 DOLLARS

TIME= 4.00

COMPONENT NO. 1	AXIAL FUEL EXP.	-.932824E-02 DOLLARS
COMPONENT NO. 2	CORE NA EXP.	-.344448E-02 DOLLARS
COMPONENT NO. 3	ABOVE-CORE NA EXP.	-.342473E-02 DOLLARS
COMPONENT NO. 4	ROD-BANK EXP., L1	-.136762E-02 DOLLARS
COMPONENT NO. 5	ROD-BANK EXP., L2	-.340950E-03 DOLLARS
COMPONENT NO. 6	ROD-BANK EXP., L3	-.366669E-04 DOLLARS
COMPONENT NO. 7	ROD-BANK EXP., L4	-.857018E-04 DOLLARS

COMBINED EFFECT -.180284E-01 DOLLARS

SUBTOTALS

COMPONENTS 2 TO 3	-.686921E-02 DOLLARS
COMPONENTS 4 TO 7	-.183093E-02 DOLLARS

TIME= 5.00

COMPONENT NO. 1	AXIAL FUEL EXP.	-.100579E-01 DOLLARS
COMPONENT NO. 2	CORE NA EXP.	-.371479E-02 DOLLARS
COMPONENT NO. 3	ABOVE-CORE NA EXP.	-.369648E-02 DOLLARS
COMPONENT NO. 4	ROD-BANK EXP., L1	-.147648E-02 DOLLARS
COMPONENT NO. 5	ROD-BANK EXP., L2	-.384166E-03 DOLLARS
COMPONENT NO. 6	ROD-BANK EXP., L3	-.520455E-04 DOLLARS
COMPONENT NO. 7	ROD-BANK EXP., L4	-.118447E-03 DOLLARS

COMBINED EFFECT -.195003E-01 DOLLARS

SUBTOTALS

COMPONENTS 2 TO 3	-.741128E-02 DOLLARS
COMPONENTS 4 TO 7	-.203114E-02 DOLLARS

TIME= 6.00

COMPONENT NO. 1	AXIAL FUEL EXP.	-.107344E-01 DOLLARS
COMPONENT NO. 2	CORE NA EXP.	-.396538E-02 DOLLARS
COMPONENT NO. 3	ABOVE-CORE NA EXP.	-.394841E-02 DOLLARS
COMPONENT NO. 4	ROD-BANK EXP., L1	-.157741E-02 DOLLARS
COMPONENT NO. 5	ROD-BANK EXP., L2	-.421164E-03 DOLLARS
COMPONENT NO. 6	ROD-BANK EXP., L3	-.685374E-04 DOLLARS
COMPONENT NO. 7	ROD-BANK EXP., L4	-.151948E-03 DOLLARS

COMBINED EFFECT -.208672E-01 DOLLARS

SUBTOTALS

COMPONENTS 2 TO 3	-.791379E-02 DOLLARS
COMPONENTS 4 TO 7	-.221906E-02 DOLLARS

TIME= 7.00

COMPONENT NO. 1	AXIAL FUEL EXP.	-.113615E-01 DOLLARS
COMPONENT NO. 2	CORE NA EXP.	-.419769E-02 DOLLARS
COMPONENT NO. 3	ABOVE-CORE NA EXP.	-.418195E-02 DOLLARS
COMPONENT NO. 4	ROD-BANK EXP., L1	-.167097E-02 DOLLARS
COMPONENT NO. 5	ROD-BANK EXP., L2	-.453895E-03 DOLLARS
COMPONENT NO. 6	ROD-BANK EXP., L3	-.858577E-04 DOLLARS
COMPONENT NO. 7	ROD-BANK EXP., L4	-.185542E-03 DOLLARS

COMBINED EFFECT -.221374E-01 DOLLARS

SUBTOTALS

COMPONENTS 2 TO 3	-.837964E-02 DOLLARS
COMPONENTS 4 TO 7	-.239626E-02 DOLLARS

TIME= 8.00

COMPONENT NO. 1	AXIAL FUEL EXP.	-.119429E-01 DOLLARS
COMPONENT NO. 2	CORE NA EXP.	-.441304E-02 DOLLARS
COMPONENT NO. 3	ABOVE-CORE NA EXP.	-.439846E-02 DOLLARS
COMPONENT NO. 4	ROD-BANK EXP., L1	-.175770E-02 DOLLARS
COMPONENT NO. 5	ROD-BANK EXP., L2	-.483438E-03 DOLLARS
COMPONENT NO. 6	ROD-BANK EXP., L3	-.103804E-03 DOLLARS
COMPONENT NO. 7	ROD-BANK EXP., L4	-.218806E-03 DOLLARS

COMBINED EFFECT -.233181E-01 DOLLARS

SUBTOTALS

COMPONENTS 2 TO 3	-.881151E-02 DOLLARS
COMPONENTS 4 TO 7	-.256375E-02 DOLLARS

TIME= 9.00

COMPONENT NO. 1	AXIAL FUEL EXP.	-.124818E-01 DOLLARS
COMPONENT NO. 2	CORE NA EXP.	-.461269E-02 DOLLARS
COMPONENT NO. 3	ABOVE-CORE NA EXP.	-.459917E-02 DOLLARS
COMPONENT NO. 4	ROD-BANK EXP., L1	-.183811E-02 DOLLARS
COMPONENT NO. 5	ROD-BANK EXP., L2	-.510416E-03 DOLLARS
COMPONENT NO. 6	ROD-BANK EXP., L3	-.122216E-03 DOLLARS
COMPONENT NO. 7	ROD-BANK EXP., L4	-.251453E-03 DOLLARS

COMBINED EFFECT -.244159E-01 DOLLARS

SUBTOTALS

COMPONENTS 2 TO 3	-.921186E-02 DOLLARS
COMPONENTS 4 TO 7	-.272219E-02 DOLLARS

TIME= 10.00

COMPONENT NO. 1	AXIAL FUEL EXP.	-.129815E-01 DOLLARS
COMPONENT NO. 2	CORE NA EXP.	-.479777E-02 DOLLARS
COMPONENT NO. 3	ABOVE-CORE NA EXP.	-.478523E-02 DOLLARS
COMPONENT NO. 4	ROD-BANK EXP., L1	-.191265E-02 DOLLARS
COMPONENT NO. 5	ROD-BANK EXP., L2	-.535216E-03 DOLLARS
COMPONENT NO. 6	ROD-BANK EXP., L3	-.140964E-03 DOLLARS
COMPONENT NO. 7	ROD-BANK EXP., L4	-.283286E-03 DOLLARS

COMBINED EFFECT -.254366E-01 DOLLARS

SUBTOTALS

COMPONENTS 2 TO 3	-.958301E-02 DOLLARS
COMPONENTS 4 TO 7	-.287211E-02 DOLLARS

REVIEW OF RESULTS

T= .100000E 00	-.102829E-02	DOLLARS
T= .200000E 00	-.371544E-02	DOLLARS
T= .400000E 00	-.892931E-02	DOLLARS
T= .600000E 00	-.111456E-01	DOLLARS
T= .800000E 00	-.121613E-01	DOLLARS
T= .100000E 01	-.127600E-01	DOLLARS
T= .200000E 01	-.147255E-01	DOLLARS
T= .300000E 01	-.164412E-01	DOLLARS
T= .400000E 01	-.180284E-01	DOLLARS
T= .500000E 01	-.195003E-01	DOLLARS
T= .600000E 01	-.208672E-01	DOLLARS
T= .700000E 01	-.221374E-01	DOLLARS
T= .800000E 01	-.233181E-01	DOLLARS
T= .900000E 01	-.244159E-01	DOLLARS
T= .100000E 02	-.254366E-01	DOLLARS

ACKNOWLEDGMENT

I wish to thank T. R. Bump for discussions of his BOW II program and D. A. Kucera for the programming of BOW III, PROFILE, and DYNAMIC.

REFERENCES

1. R. A. Cushman, *The Effect of Radial Heat Transfer on the Temperature Distribution in EBR-II Stainless-Steel Reflector Subassemblies*, Trans. Am. Nucl. Soc. *10*, 661 (1967).

2. T. R. Bump, *Effect of Reactor Temperatures on Bowing of EBR-II Subassemblies*, Trans. Am. Nucl. Soc. *10*, 661 (1967).

   R. R. Smith, P. J. Persiani, D. A. Meneley, J. T. Madell, J. K. Long, F. S. Kirn, R. W. Hyndman, R. A. Cushman, T. R. Bump, J. C. Beitel, and D. A. Kucera, *EBR-II Run 25 and 26A Interim Report*, ANL internal memorandum (1968).

3. L. J. Koch, W. B. Loewenstein, and H. O. Monson, *Addendum to Hazard Summary Report, Experimental Breeder Reactor-II (EBR-II)*, ANL-5719 (Addendum) (June 1962).

4. P. J. Persiani, T. R. Bump, R. A. Cushman, J. Long, and D. Kucera, *Analysis of the Variation in the EBR-II Power Coefficient Due to Blanket Change*, Trans. Am. Nucl. Soc. *11*, 282 (1968).

5. T. R. Bump, *Bow II: A Code for Calculating Deflections of Closely Spaced Parallel Beams, Each with Limited-pivot Support at One End, Possible Beam Interactions at Other End and at One Intermediate Position, and Arbitrary Temperature Distribution*, ANL-7528 (to be published).

6. P. J. Persiani, J. Kallfelz, F. Kirn, J. K. Long, and R. Smith, *EBR-II Power Coefficient Variations During Operational Run 26*, Trans. Am. Nucl. Soc. *11*, 281 (1968).

7. R. Hyndman, private communication, ANL Idaho Division (Rod-drop Power Time Curve).

8. J. A. DeShong, Jr., *Power Transfer Functions of the EBWR Obtained Using A Sinusoidal Reactivity Driving Function*, ANL-5798 (Jan 1958).

9. J. A. DeShong, Jr. and W. C. Lipinski, *Analyses of Experimental Power-reactivity Feedback Transfer Functions for a Natural Circulation Boiling Water Reactor*, ANL-5850 (July 1958).

10. R. J. Roark, *Formulas for Stress and Strain*, McGraw-Hill (1965), Table III, p. 104.

11. P. Laurson and W. Cox, *Properties and Mechanics of Materials*, John Wiley and Sons (1931), p. 255.

12. S. Timoshenko, *Theory of Plates and Shells*, 2nd Edition, McGraw-Hill (1959), p. 206.
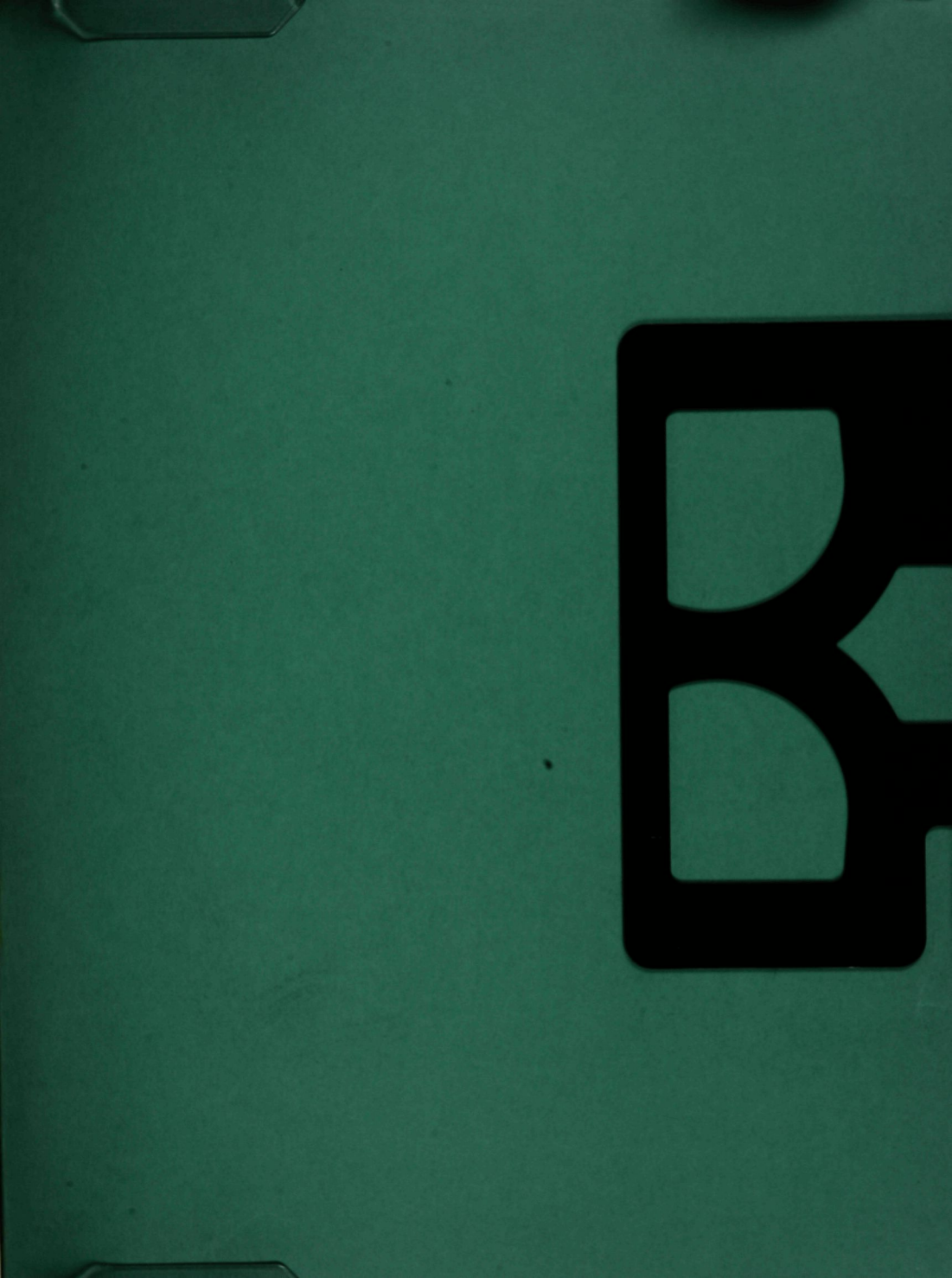
13. F. Jones and E. Oberg, *Machinery's Handbook*, The Industrial Press, New York (1937), p. 346.