ANL-7555

ANL-7555

Argonne National Laboratory

NUMERICAL ALGORITHMS TO DETERMINE THE STRUCTURAL BEHAVIOR OF A CYLINDRICAL INVOLUTE FUEL PLATE UNDER STEADY-STATE LOADING

by

D. B. Taylor and A. H. Marchertas

The facilities of Argonne National Laboratory are owned by the United States Government. Under the terms of a contract (W-31-109-Eng-38) between the U. S. Atomic Energy Commission, Argonne Universities Association and The University of Chicago, the University employs the staff and operates the Laboratory in accordance with policies and programs formulated, approved and reviewed by the Association.

MEMBERS OF ARGONNE UNIVERSITIES ASSOCIATION

The University of Arizona
Carnegie-Mellon University
Case Western Reserve University
The University of Chicago
University of Cincinnati
Illinois Institute of Technology
University of Illinois
Indiana University
Iowa State University
The University of Iowa
Kansas State University
The University of Kansas
Loyola University
Marquette University
Michigan State University
The University of Michigan
University of Minnesota
University of Missouri
Northwestern University
University of Notre Dame
The Ohio State University
Ohio University
The Pennsylvania State University
Purdue University
Saint Louis University
Southern Illinois University
University of Texas
Washington University
Wayne State University
The University of Wisconsin

LEGAL NOTICE

This report was prepared as an account of Government sponsored work. Neither the United States, nor the Commission, nor any person acting on behalf of the Commission:

A. Makes any warranty or representation, expressed or implied, with respect to the accuracy, completeness, or usefulness of the information contained in this report, or that the use of any information, apparatus, method, or process disclosed in this report may not infringe privately owned rights; or

B. Assumes any liabilities with respect to the use of, or for damages resulting from the use of any information, apparatus, method, or process disclosed in this report.

As used in the above, "person acting on behalf of the Commission" includes any employee or contractor of the Commission, or employee of such contractor, to the extent that such employee or contractor of the Commission, or employee of such contractor prepares, disseminates, or provides access to, any information pursuant to his employment or contract with the Commission, or his employment with such contractor.

Printed in the United States of America
Available from
Clearinghouse for Federal Scientific and Technical Information
National Bureau of Standards, U. S. Department of Commerce
Springfield, Virginia 22151
Price: Printed Copy $3.00; Microfiche $0.65

ANL-7555
Physics

ARGONNE NATIONAL LABORATORY
9700 South Cass Avenue
Argonne, Illinois 60439

NUMERICAL ALGORITHMS TO DETERMINE THE STRUCTURAL BEHAVIOR OF A CYLINDRICAL INVOLUTE FUEL PLATE UNDER STEADY-STATE LOADING

by

D. B. Taylor
Applied Mathematics Division

and

A. H. Marchertas
Reactor Analysis and Safety Division

February 1970

TABLE OF CONTENTS

	Page
ABSTRACT	5
I. INTRODUCTION	5
II. ANALYTIC DEVELOPMENT	7
A. The Problem Defined	7
B. The Method Used	7
C. Derivation of the Differential Equations Describing Deformation	8
D. Boundary Conditions	18
E. Methods of Solution	22
III. FINAL REMARKS	25
APPENDIXES	
A. Variational Methods	26
B. Derivation of Difference Equations by a Variational Approach	27
C. Solution of Elliptic P.D.E.'s Using a Finite-element Approach	34
REFERENCES	41

LIST OF FIGURES

No.	Title	Page
1.	Core Assembly of AARR	6
2.	Fuel and Burnable-poison Distribution in the As-built Element for AARR	6
3.	Geometrical Definitions	7
4.	The Stresses on a Layer Parallel to the Middle Surface	10
5.	Resultant Forces and Moments on an Element	11
6.	Plan of the Plate in (sy)-space	18
7.	Load Condition on y = 0	18
8.	Resolution of M_{ys} on y = 0	19

TABLE

No.	Title	Page
I.	Modes of Vibration of Beams	23

NUMERICAL ALGORITHMS TO DETERMINE THE STRUCTURAL BEHAVIOR OF A CYLINDRICAL INVOLUTE FUEL PLATE UNDER STEADY-STATE LOADING

by

D. B. Taylor* and A. H. Marchertas

ABSTRACT

Differential equations are derived describing the structural characteristics of a thin, cylindrical involute shell. The shell considered is of homogeneous construction and uniform in thickness, and is subject to a steady-state loading consisting of transverse pressure and internal thermal gradients. These are assumed to vary throughout the entire surface of the shell--in case of the temperature, also across the shell thickness. Boundary conditions are as follows: free involute ends of the shell; axial sides which are pinned, fixed, or what has been referred to as "rotated." In their final form, a total of three partial differential equations are deduced in terms of tangential, axial, and transverse displacements. These equations are not solved, but possible methods of numerical solutions are discussed.

I. INTRODUCTION

The work contained in this report was initiated in connection with the safety of the Argonne Advanced Research Reactor (AARR). The latest version of the AARR reactor core consisted of two concentric fuel elements, each comprising a multitude of involute plates, as shown in Fig. 1. The cross section of the individual plates is illustrated in Fig. 2. The design of the structure required that the fuel plates sustain safely all possible variations of pressure and temperature during reactor operation.

The loads could be of numerous types: internal nonuniform expansion due to reactivity variation of the fuel along the plate and pressure variation within the cooling channel, just to mention two. These and other variables are interdependent and of transient nature during reactor operation. It should be evident that not all of the variables could be included in the study of mathematical models at once; it is more efficient to progress in steps by examining each relevant variable on its own merits.

*Now at Edinburgh Regional Computing Centre, Edinburgh, Scotland.

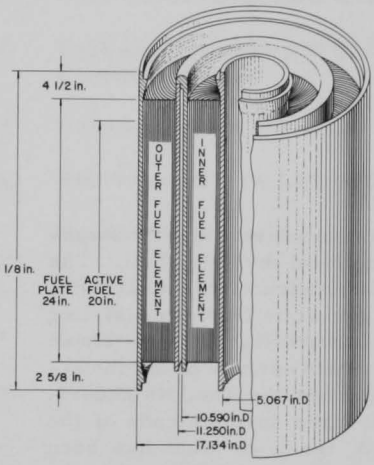

Fig. 1. Core Assembly of AARR

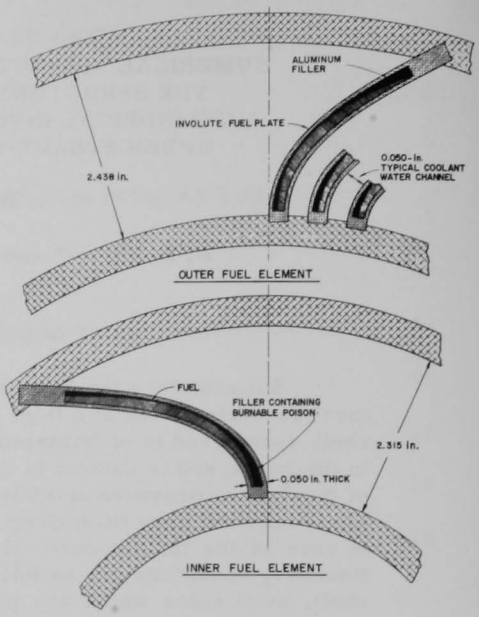

Fig. 2. Fuel and Burnable-poison Distribution in the As-built Element for AARR

Since the involute plates or shells have not as yet been extensively studied, it became necessary to deal with this problem from the beginning. First, the involute plate of homogeneous construction was assumed; loading was taken to be applied statically and to change only along the length of the involute. This one-variable treatment of the plate is described in Ref. 1. The present analysis, which may be called the second step of the treatment, considers the same plate but with load variation both along the involute and the axial direction. Thus, the corresponding response of the plate is a two-variable affair. Other complications to the actual fuel-plate problem, such as nonhomogeneity of the plate, transient input conditions, and buckling considerations, have not been considered.

Termination of the AARR project brought an end to the overall treatment of the fuel plate; even the numerical solution of the herein-derived differential equations for the two-variable involute plate could not be completed. The deduction of the differential equations adapted to the involute plate and appropriate boundary conditions, which had been obtained for that purpose, are outlined in this report. Possible methods for numerical evaluation are also suggested.

II. ANALYTIC DEVELOPMENT

A. The Problem Defined

The object is to analyze the two-variable deformation and strength susceptibility of a thin involute plate (or shell) which is subjected to internal temperature variations and transverse pressure changes. The shell is assumed to be homogeneous and uniform in thickness. All loads are of a steady-state nature.

A cross section of the involute configuration, with its geometrical relationships, is illustrated in Fig. 3. The inside boundary of the plate, also being the geometric evolute, is of circular shape; the concentric outside boundary of the involute is also circular.

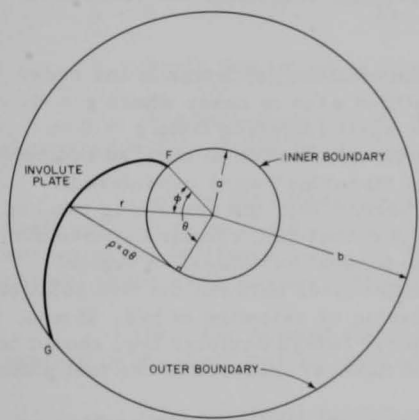

Fig. 3. Geometrical Definitions

Ends of the involute shells are free, while their sides are intermittently welded to the concentric solid cylinders (details not shown in Fig. 1). This boundary condition at the sides of the shell cannot be mathematically represented without expending a lot of time and effort, if at all. An alternative is to seek solutions of problems with greatly simplified boundary conditions and then to bracket the actual results. Thus, the sides of the shell are assumed to be pinned, completely fixed, or allowed to rotate with respect to the center of the core. The last boundary condition is one in which the shells are fixed to the cylinders in the usual sense, but the cylinders themselves are free to rotate with respect to the center of the core. The answer to the actual problem would then be bracketed by the solutions of the above boundary conditions. Consequently, as far as this report is concerned, solution of the involute-shell problem with the above three boundary conditions at the sides will be sought.

B. The Method Used

Thin shell theories which have been usefully applied in the field of design are those based on the assumptions proposed by Kirchhoff.[2] These assumptions extend the beam theory to that of plates and shells, thus complementing the plate theory with physical meaning. Although the theories found in recent technical literature are based on the identical assumptions, most of them show variations in their final expressions. The wide variety

of results in shell equations is due to the variations of different approximations in deriving the strain-displacement relations. Most of these variations, however, as noted by Koiter,[3] are of such an order ($\sim h/\rho$, where h is shell thickness and ρ the radius of curvature) as not to affect materially the final numerical solution. As shown by Koiter, the additional terms can be added or subtracted from the equations at will, thus providing a means for possible simplification of the solution.

It had also been shown by Novozhilov[4] that the original Kirchhoff assumptions introduce errors of the order h/ρ. Consequently, since Kirchhoff's assumptions are used as the basis of the thin-shell theory, the ratio h/ρ can be neglected when compared with unity in the derivation of strain-displacement relations. This, naturally, simplifies the solution to a great extent.

It has also been illustrated that the omission of terms of the order of h/ρ, as compared to unity, may be justified even in cases where $\rho \simeq 0$. An example of such a case is the involute shell extending from $\rho = 0$ to some practical finite value. A one-variable illustration of such an example is given in Ref. 1, where five independent "theories" were considered: three of them had neglected h/ρ in their derivations; the remaining two had not. All of them had been adapted to the one-variable, cylindrical involute shell and were solved explicitly for the dependent variables. A typical numerical example failed to show any differences between the five solutions which could be directly attributed to omission or retention of h/ρ. It was, therefore, suggested that the simplest theory (which neglects h/ρ) should be considered for further and more involved flexural analyses of the fuel plate.

The same viewpoint is applied here to the two-variable problem of the cylindrical involute plate: deformations are assumed to be small and the terms h/ρ, when compared to unity, are neglected. A relatively simple and consistent presentation of the thin-shell theory is given by Koiter, Novozhilov, and some others. Since Novozhilov's material is collected in one book,[4] his reference will be used alone, for purposes of convenience.

C. Derivation of the Differential Equations Describing Deformation

1. Shell Geometry

The plates occupy an annular region of finite length. A cross section with the centerline of one plate is shown in Fig. 3. Coordinates y and s are defined by distance across the surface of the plate, y in the axial direction and s along an involute. The arc length s may be expressed in terms of θ, the generating parameter of the involute, which in the undeformed state has radius of curvature $\rho = a\theta$; thus,

$$s = \int_0^{\theta} a\xi \, d\xi = \tfrac{1}{2} a\theta^2. \tag{1}$$

Hence, the radius of curvature is given by

$$\rho = (2as)^{1/2}. \tag{2}$$

The involute may also be described in terms of r, the distance of a point on the involute from the center of the generating circle, and φ, which is defined in Fig. 3. Geometrical analysis yields

$$\left.\begin{aligned} r &= a(\theta^2+1)^{1/2} \\ \varphi &= \theta - \cos^{-1}[(\theta^2+1)^{-1/2}] \end{aligned}\right\}. \tag{3}$$

2. Basic Assumptions and Notation

The thin-shell approximation as proposed by Novozhilov[4] and discussed in Sec. B will be used in the following form:

(a) In the determination of the deformations of the fibers of a shell parallel to its middle surface and also in the computation of the strain energy of the deformed shell, the deformation due to shearing stresses normal to the shell and the strain normal to the shell may be ignored.

(b) The normal stresses acting on planes parallel to the middle surface of the shell may be ignored in comparison with other stresses.

The equations written here are obtained from those given in Ref. 4. The stress and strain notation and the coordinate orientation is that used by Timoshenko,[5]* with (y,s) replacing (x,y).

3. Forces and Moments on a Surface Element

Figure 4 shows a surface element separated by four cuts perpendicular to the middle surface along the curves $s = s_p$, $s = s_p + \Delta s$, $y = y_p$, and $y = y_p + \Delta y$. Also shown is a layer of the shell of thickness dz at even distance z from the middle surface.

Six stresses act on the edges of the layer: σ_s and σ_y are normal stresses, σ_{sy} and σ_{ys} are the shear stresses acting parallel to the middle

*Note: The notation of Novozhilov (subscript N where necessary) is related to that used here as follows: $\alpha_1 = s$, $\alpha_2 = y$, $z_N = -z$, $A_1 = A_2 = 1$, $\omega = \psi$, $R_1 = \rho$; $R_2 = \infty$; $N_1 = -Q_s$; $N_2 = -Q_y$; $T_1 = N_s$; $T_2 = N_y$, $T_{12} = N_{sy}$, $T_{21} = N_{ys}$, $M_1 = -M_s$, $M_2 = -M_y$, $M_{12} = -M_{sy}$, $M_{21} = M_{ys}$.

surface, and σ_{sz} and σ_{yz} are the shear stresses acting normal to the middle surface. The stresses σ'_s, σ'_y, etc., act in the opposite direction to σ_s, σ_y, etc., where $\sigma'_s = \sigma_s + (\partial\sigma_s/\partial s)\Delta s$, etc.

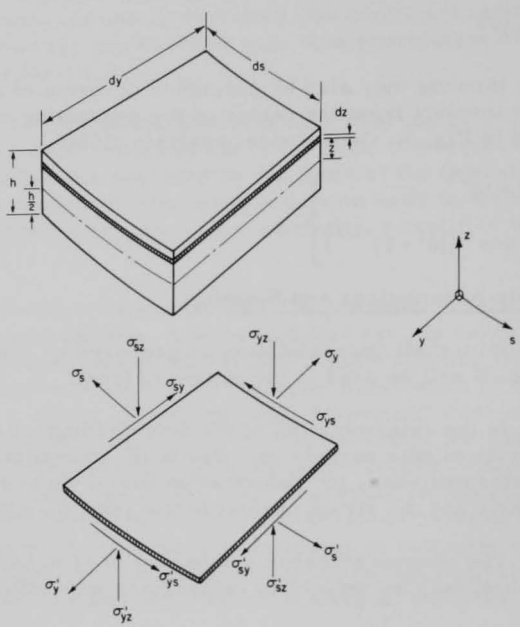

Fig. 4. The Stresses on a Layer Parallel to the Middle Surface

The resultant membrane and shear forces per unit length are obtained by integration over the plate thickness:

$$\left.\begin{aligned} N_s &= \int_{-h/2}^{h/2} \sigma_s \, dz; \quad & N_y &= \int_{-h/2}^{h/2} \sigma_y \left(1 - \frac{z}{\rho}\right) dz \\ N_{sy} &= \int_{-h/2}^{h/2} \sigma_{sy} \, dz; \quad & N_{ys} &= \int_{-h/2}^{h/2} \sigma_{ys} \left(1 - \frac{z}{\rho}\right) dz \\ Q_s &= \int_{-h/2}^{h/2} \sigma_{sz} \, dz; \quad & Q_y &= \int_{-h/2}^{h/2} \sigma_{yz} \left(1 - \frac{z}{\rho}\right) dz \end{aligned}\right\} . \tag{4}$$

The resultant bending and twisting moments about the y and s axes also must be considered:

$$\left.\begin{aligned} M_s &= \int_{-h/2}^{h/2} \sigma_s z\, dz; \quad M_y = \int_{-h/2}^{h/2} \sigma_y z\left(1 - \frac{z}{\rho}\right) dz \\ M_{sy} &= \int_{-h/2}^{h/2} \sigma_{sy} z\, dz; \quad M_{ys} = -\int_{-h/2}^{h/2} \sigma_{ys} z\left(1 - \frac{z}{\rho}\right) dz \end{aligned}\right\}. \tag{5}$$

The orientation of these resultant forces and moments are shown in Fig. 5, in which $N_s' = N_s + (\partial N_s/\partial s)\Delta s$, etc.

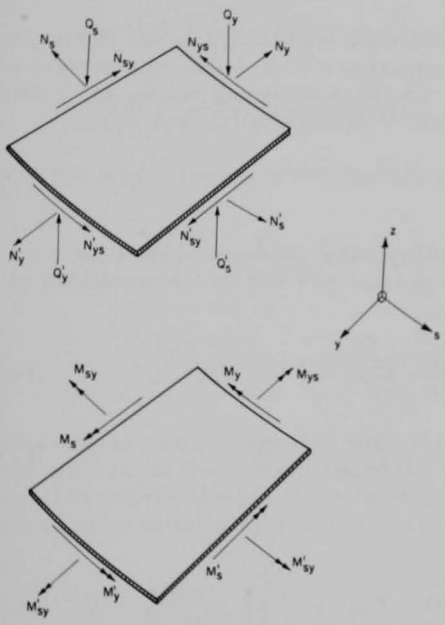

Fig. 5. Resultant Forces and Moments on an Element

When products of displacements and their derivatives are neglected, consideration of the equilibrium of an element of the shell leads to the equations

$$\left.\begin{aligned} &\frac{\partial Q_s}{\partial s} + \frac{\partial Q_y}{\partial y} + \frac{N_s}{\rho} + p = 0; \\ &\frac{\partial N_s}{\partial s} + \frac{N_{ys}}{\partial y} - \frac{Q_s}{\rho} = 0; \\ &\frac{\partial N_{sy}}{\partial s} + \frac{\partial N_y}{\partial y} = 0; \\ &\frac{\partial M_s}{\partial s} - \frac{\partial M_{ys}}{\partial y} - Q_s = 0; \\ &\frac{\partial M_y}{\partial y} + \frac{\partial M_{sy}}{\partial s} - Q_y = 0; \\ &M_{sy} - \rho(N_{sy} - N_{ys}) = 0. \end{aligned}\right\} \tag{6}$$

Substitution from Eqs. (4) and (5) into the last of Eqs. (6) gives

$$M_{sy} - \rho(N_{sy} - N_{ys}) = \int_{-h/2}^{h/2} (z - \rho)(\sigma_{sy} - \sigma_{ys})\, dz = 0. \tag{7}$$

It follows that the assumption that displacements are small is sufficient to establish that $\sigma_{sy} = \sigma_{ys}$, i.e., the stress tensor for a layer is symmetric.

Now let u, v, and w be the displacements of the surface in the s, y, and z directions. The Lamé coefficients for the chosen s,y coordinate system are both 1. Novozhilov gives a derivation of the relationship between the strains and shear deformation on a shallow layer parallel to the middle surface, such as in Fig. 4, in terms of five parameters of the middle surface. His results are as follows:

$$\epsilon_s(z) = \frac{\rho}{\rho - z}(\epsilon_s - z\varkappa_s);$$

$$\epsilon_y(z) = \epsilon_y - z\varkappa_y;$$

$$\Psi(z) = \frac{\rho}{\rho - z}\left[\psi - 2\left(1 - \frac{z}{2\rho}\right) z\tau\right], \tag{8}$$

where ϵ_s and ϵ_y are strains on the middle surface, and ψ is the change in shear on this surface. Corresponding functions of z relate to a surface at distance z from the middle surface. The parameters $\varkappa_s$ and $\varkappa_y$ are related to the changes in curvature in the s and y directions ($\varkappa_s'$ and $\varkappa_y'$) by

$$\varkappa_s' = \varkappa_s - \frac{\epsilon_s}{\rho}; \quad \varkappa_y' = \varkappa_y. \tag{9}$$

The parameter τ is the twist about either axis. Novozhilov derives the following relationships between these parameters and the deformations of the middle surface:

$$\epsilon_s = \frac{\partial u}{\partial s} - \frac{w}{\rho}; \quad \epsilon_y = \frac{\partial v}{\partial y}; \quad \psi = \frac{\partial v}{\partial s} + \frac{\partial u}{\partial y}; \tag{10}$$

$$\varkappa_s = \frac{\partial^2 w}{\partial s^2} + \frac{\partial}{\partial s}\left(\frac{u}{p}\right); \quad \varkappa_y = \frac{\partial^2 w}{\partial y^2}; \quad \tau = \frac{\partial^2 w}{\partial s \partial y} + \frac{1}{\rho}\frac{\partial u}{\partial y}. \tag{11}$$

Accordingly,

$$\varkappa_s' = \frac{\partial^2 w}{\partial s^2} - \frac{ua}{\rho^3} + \frac{w}{\rho^2}.$$

4. Evaluation of Strain Energy

We now write down the stress-strain relationships for a heated isotropic shell. The deformations will be given on a surface parallel to the middle surface of the shell and at distance z from the middle surface. The temperature of the shell, T, is function of s, y, and z. The relationships are

$$\left.\begin{aligned}
\epsilon_s(z) &= \frac{1}{E}\sigma_s(z) - \frac{\nu}{E}\sigma_y(z) + \alpha T; \\
\epsilon_y(z) &= \frac{1}{E}\sigma_y(z) - \frac{\nu}{E}\sigma_s(z) + \alpha T; \\
\Psi(z) &= \frac{2(1+\nu)}{E}\sigma_{ys}(z),
\end{aligned}\right\} \tag{12}$$

where ν is the Poisson ratio, E is Young's modulus, and α is the coefficient of linear thermal expansion, which are assumed to be independent of temperature (see, for example, Langhaar, Miller, and Boresi[6]). These equations can be solved for the stresses:

$$\left.\begin{aligned}
\sigma_s(z) &= \frac{E}{(1-\nu^2)}\left[\epsilon_s(z) + \nu\epsilon_y(z) - (1+\nu)\,\alpha T\right]; \\
\sigma_y(z) &= \frac{E}{(1-\nu^2)}\left[\epsilon_y(z) + \nu\epsilon_s(z) - (1+\nu)\,\alpha T\right].
\end{aligned}\right\} \tag{13}$$

Now the strain energy of the shell is given (Ref. 6) by

$$U = \iiint\left\{\frac{E}{2(1-\nu^2)}\left[\epsilon_s^2(z) + \epsilon_y^2(z) + \nu\epsilon_y(z)\epsilon_s(z)\right] + \frac{E}{4(1+\nu)}\Psi^2(z)\right.$$

$$\left. - \frac{E\alpha T}{1-\nu}\left[\epsilon_s(z) + \epsilon_y(z)\right]\right\}\left(1 - \frac{z}{\rho}\right) dz\,ds\,dy. \tag{14}$$

This energy integral ignores normal stress and shear strains in accordance with part (a) of the initial hypothesis. When Eqs. (8) are introduced into Eq. (14) and the integration with respect to z is carried out, then, if h/ρ is ignored in comparison with unity,

$$U = \frac{Eh}{2(1-\nu^2)}\iint\left[(\epsilon_s + \epsilon_y)^2 - 2(1-\nu)\left(\epsilon_s\epsilon_y - \frac{\Psi^2}{4}\right)\right] ds\,dy$$

$$+ \frac{Eh^3}{24(1-\nu^2)}\iint\left[(\kappa_s + \kappa_y)^2 - 2(1-\nu)(\kappa_s\kappa_y - \tau^2)\right] ds\,dy$$

$$- \frac{E\alpha}{1-\nu}\iint\left[(\epsilon_s + \epsilon_y)\int_{-h/2}^{h/2} T\,dz - (\kappa_s + \kappa_y)\int_{-h/2}^{h/2} zT\,dz\right] ds\,dy. \tag{15}$$

5. Evaluation of Resultant Forces and Moments Using Virtual Work

The relationship between the forces and moments and the strains on the middle surface may now be obtained. The variational change in the strain energy may be expressed in the form

$$\delta U = \iiint_{-h/2}^{h/2} [\sigma_y(z)\delta\epsilon_y(z) + \sigma_s(z)\delta\epsilon_s(z) + \sigma_{sy}(z)\delta\psi(z)]\left(1 - \frac{z}{\rho}\right) dz dy ds. \quad (16)$$

This is the work done by incremental strains. Introduction of Eqs. (8) yields

$$\delta U = \iiint_{-h/2}^{h/2} \left\{ \sigma_y(z)(\delta\epsilon_y - z\delta\varkappa_y)\left(1 - \frac{z}{\rho}\right) + \sigma_s(z)(\delta\epsilon_s - z\delta\varkappa_s) \right.$$

$$\left. + \sigma_{ys}(z)\left[\delta\psi_s - z\delta\tau_s + \left(1 - \frac{z}{\rho}\right)(\delta\psi_y - z\delta\tau_y)\right]\right\} dz dy ds. \quad (17)$$

If Eqs. (4) and (5) are used to eliminate the integral with respect to z,

$$\delta U = \iint (N_s\delta\epsilon_s + N_y\delta\epsilon_y - M_y\delta\varkappa_y - M_s\delta\varkappa_s + S\delta\psi + 2H\delta\tau)\, ds dy, \quad (18)$$

where

$$H = \tfrac{1}{2}(M_{ys} - M_{sy}); \quad S = N_{ys} + \frac{M_{sy}}{\rho} = N_{sy}. \quad (19)$$

The variables N_s, N_y, M_y, M_s, S, and H are sufficient to describe the equilibrium of the shell. It will be seen that any boundary condition on the shell can also be expressed in terms of these variables.

When the coefficients in Eq. (18) are compared with those obtained when the variational increase is computed by direct differentiation of Eq. (15), the following relationships are found:

$$\left.\begin{aligned} N_s &= \frac{Eh}{(1-\nu^2)}(\epsilon_s + \nu\epsilon_y) - \frac{E\alpha}{1-\nu}\int_{-h/2}^{h/2} T\, dz; \\ N_y &= \frac{Eh}{(1-\nu^2)}(\epsilon_y + \nu\epsilon_s) - \frac{E\alpha}{1-\nu}\int_{-h/2}^{h/2} T\, dz; \end{aligned}\right\} \quad (20)$$

(Contd.)

$$\left.\begin{aligned}
N_{sy} &= S = \frac{Eh}{2(1-\nu)}\psi; \\
M_s &= \frac{Eh^3}{12(1-\nu^2)}(\varkappa_s + \nu\varkappa_y) - \frac{E\alpha}{1-\nu}\int_{-h/2}^{h/2} zT\,dz; \\
M_y &= -\frac{Eh^3}{12(1-\nu^2)}(\varkappa_y + \nu\varkappa_s) - \frac{E\alpha}{1-\nu}\int_{-h/2}^{h/2} zT\,dz; \\
H &= \frac{Eh^3}{12(1+\nu)}\tau.
\end{aligned}\right\} \quad \text{(Contd.)} \quad (20)$$

Since

$$M_{sy} + M_{ys} = \frac{1}{\rho}\int_{-h/2}^{h/2} z^2\sigma_{ys}\,dz \approx \frac{Eh^3}{48(1+\nu)}\frac{\psi}{\rho},$$

the error introduced by putting

$$M_{ys} = -M_{sy} = H \tag{21}$$

is small if h/ρ is small.

Equations for the displacements u, v, and w may now be obtained. Substitution from Eqs. (10) and (11) into Eq. (20) and use of Eqs. (19) and (21) yield

$$\left.\begin{aligned}
N_s &= \frac{12D}{h^2}\left(\frac{\partial u}{\partial s} - \frac{w}{\rho} + \nu\frac{\partial v}{\partial y}\right) - T^*; \\
N_y &= \frac{12D}{h^2}\left[\nu\left(\frac{\partial u}{\partial s} - \frac{w}{\rho}\right) + \frac{\partial v}{\partial y}\right] - T^*; \\
M_s &= -D\left[\frac{\partial^2 w}{\partial s^2} + \frac{\partial}{\partial s}\left(\frac{u}{\rho}\right) + \nu\frac{\partial^2 w}{\partial y^2}\right] - T^{**}; \\
M_y &= -D\left\{\nu\left[\frac{\partial^2 w}{\partial s^2} + \frac{\partial}{\partial s}\left(\frac{u}{\rho}\right)\right] + \frac{\partial^2 w}{\partial y^2}\right\} - T^{**}; \\
N_{sy} &= \frac{6D(1-\nu)}{h^2}\left(\frac{\partial v}{\partial s} + \frac{\partial u}{\partial y}\right);
\end{aligned}\right\} \quad (22) \quad \text{(Contd.)}$$

$$\left.\begin{aligned} N_{ys} &= N_{sy} + \frac{D(1-\nu)}{\rho}\left(\frac{\partial^2 w}{\partial s \partial y} + \frac{1}{\rho}\frac{\partial u}{\partial y}\right); \\ M_{ys} &= -M_{sy} = D(1-\nu)\left(\frac{\partial^2 w}{\partial s \partial y} + \frac{1}{\rho}\frac{\partial u}{\partial y}\right), \end{aligned}\right\} \quad \begin{matrix}\text{(Contd.)} \\ (22)\end{matrix}$$

where

$$T^* = \frac{E\alpha}{1-\nu}\int_{-h/2}^{h/2} T\, dz;$$

$$T^{**} = \frac{E\alpha}{1-\nu}\int_{-h/2}^{h/2} zT\, dz;$$

$$D = \frac{Eh^3}{12(1-\nu^2)}.$$

6. Derivation of the Differential Equations for the Displacements

By eliminating shear loads Q_s and Q_y from Eqs. (6), the number of differential equations can be reduced to three:

$$\left.\begin{aligned} &\frac{\partial N_{sy}}{\partial s} + \frac{\partial N_y}{\partial y} = 0; \\ &\frac{\partial N_s}{\partial s} + \frac{\partial N_{ys}}{\partial y} - \frac{1}{\rho}\frac{\partial M_s}{\partial s} + \frac{1}{\rho}\frac{\partial M_{ys}}{\partial y} = 0; \\ &\frac{\partial^2 M_s}{\partial s^2} - \frac{\partial^2 M_{ys}}{\partial s \partial y} + \frac{\partial^2 M_y}{\partial y^2} + \frac{\partial^2 M_{sy}}{\partial s \partial y} + \frac{N_s}{\rho} + p = 0, \end{aligned}\right\} \quad (23)$$

where the last of Eqs. (6) has been neglected. Equations (22) and (23) comprise 11 equations with 11 unknowns. Three equations for u, v, and w can be obtained by substitution of Eqs. (22) into Eqs. (23), giving

$$\left.\begin{aligned} &\frac{\partial^2 v}{\partial y^2} + \frac{(1-\nu)}{2}\frac{\partial^2 v}{\partial s^2} + \frac{(1+\nu)}{2}\frac{\partial^2 u}{\partial s \partial y} - \frac{\nu}{\rho}\frac{\partial w}{\partial y} = \frac{\alpha(1+\nu)}{h}\int_{-h/2}^{h/2}\frac{\partial T}{\partial y}\, dz; \\ &\frac{\partial^2 u}{\partial s^2} + \frac{(1-\nu)}{2}\frac{\partial^2 u}{\partial y^2} + \frac{(1+\nu)}{2}\frac{\partial^2 v}{\partial s \partial y} - \frac{\partial}{\partial s}\left(\frac{w}{\rho}\right) \end{aligned}\right\} \quad \begin{matrix}(24) \\ \text{(Contd.)}\end{matrix}$$

$$+ \frac{h^2}{12\rho}\left[\frac{\partial^3 w}{\partial s^3} + (2-\nu)\frac{\partial^3 w}{\partial s\,\partial y^2} + \frac{\partial^2}{\partial s^2}\left(\frac{u}{\rho}\right) + 2(1-\nu)\frac{\partial^2}{\partial y^2}\left(\frac{u}{\rho}\right)\right]$$

$$= \frac{\alpha(1+\nu)}{h}\int_{-h/2}^{h/2}\frac{\partial T}{\partial s}\left(1-\frac{z}{\rho}\right)dz;$$

$$\frac{\partial u}{\partial s} - \frac{w}{\rho} + \nu\frac{\partial v}{\partial y}$$

$$- \frac{\rho h^2}{12}\left[\frac{\partial^4 w}{\partial s^4} + \frac{\partial^4 w}{\partial y^4} + 2\frac{\partial^4 w}{\partial s^2\partial y^2} + (2-\nu)\frac{\partial^3}{\partial s\,\partial y^2}\left(\frac{u}{\rho}\right) + \frac{\partial^3}{\partial s^3}\left(\frac{u}{\rho}\right)\right]$$

$$= \frac{\alpha(1+\nu)}{h}\int_{-h/2}^{h/2}(T + \rho z\nabla^2 T)\,dz - \frac{h^2\rho}{12D}\,p. \qquad \text{(Contd.) (24)}$$

7. Direct Evaluation of the Displacement Equations from the Energy Integral

An alternative derivation of these equations can be obtained by substituting from Eqs. (10) and (11) into (15), and using variational methods. The substitution yields

$$U = \frac{6D}{h^2}\iint\left\{\left(\frac{\partial u}{\partial s} - \frac{w}{\rho} + \frac{\partial v}{\partial y}\right)^2 - 2(1-\nu)\left[\left(\frac{\partial v}{\partial y}\right)\left(\frac{\partial u}{\partial s} - \frac{w}{\rho}\right) - \frac{1}{4}\left(\frac{\partial v}{\partial s} + \frac{\partial u}{\partial y}\right)^2\right]\right\}dsdy$$

$$+ \frac{D}{2}\iint\left(\left[\frac{\partial^2 w}{\partial s^2} + \frac{\partial}{\partial s}\left(\frac{u}{\rho}\right) + \frac{\partial^2 w}{\partial y^2}\right]^2 - 2(1-\nu)\left\{\left[\frac{\partial^2 w}{\partial s^2} + \frac{\partial}{\partial s}\left(\frac{u}{\rho}\right)\right]\left(\frac{\partial^2 w}{\partial y^2}\right)\right.\right.$$

$$\left.\left. - \left(\frac{\partial^2 w}{\partial s\,\partial y} + \frac{1}{\rho}\frac{\partial u}{\partial y}\right)^2\right\}\right)dsdy$$

$$- \frac{E\alpha}{1-\nu}\iint\left\{\left(\frac{\partial u}{\partial s} - \frac{w}{\rho} + \frac{\partial v}{\partial y}\right)\int_{-h/2}^{h/2}T\,dz - \left[\frac{\partial^2 w}{\partial s^2} + \frac{\partial}{\partial s}\left(\frac{u}{\rho}\right) + \frac{\partial^2 w}{\partial y^2}\right]\int zT\,dz\right\}dsdy. \qquad (25)$$

To this must be added the work done by the external force p, namely $\iint wp\,dsdy$, to obtain the total energy V of the system. Now equilibrium occurs when V has a minimum, that is, when the variational derivatives of V with respect to u, v, and w vanish. The evaluation of such a derivative is achieved as follows (see Appendix A):

If

$$V[u] = \iint F\left(s, y, u, \frac{\partial u}{\partial s}, \frac{\partial u}{\partial y}, \frac{\partial^2 u}{\partial s^2}, \frac{\partial^2 u}{\partial s \partial y}, \frac{\partial^2 u}{\partial y^2}\right) ds dy,$$

then $\delta V/\delta u = 0$ implies that

$$\frac{\partial F}{\partial u} - \frac{\partial}{\partial s}\left[\frac{\partial F}{\partial\left(\frac{\partial u}{\partial s}\right)}\right] - \frac{\partial}{\partial y}\left[\frac{\partial F}{\partial\left(\frac{\partial u}{\partial y}\right)}\right] + \frac{\partial^2}{\partial s^2}\left[\frac{\partial F}{\partial\left(\frac{\partial^2 u}{\partial s^2}\right)}\right] + \frac{\partial^2}{\partial s \partial y}\left[\frac{\partial F}{\partial\left(\frac{\partial^2 u}{\partial s \partial y}\right)}\right]$$

$$+ \frac{\partial^2}{\partial y^2}\left[\frac{\partial F}{\partial\left(\frac{\partial^2 u}{\partial y^2}\right)}\right] = 0. \tag{26}$$

When $V = V[u, v, w]$, the variational derivatives with respect to v and w are similarly defined. The equations $\delta V/\delta v = 0$, $\delta V/\delta u = 0$, and $\delta V/\delta w = 0$ lead to Eqs. (24). In this manner, Eqs. (24) are obtained without reference to the average stresses and moments.

D. Boundary Conditions

A plate of the plan shown in Fig. 6 will be considered.

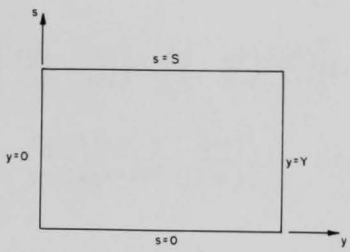

Fig. 6
Plan of the Plate in (sy)-space

1. Conditions on the Ends of the Plate

The plate will be left free on $y = 0$ and $y = Y$. The forces and moments acting on the edge $y = 0$ are N_y, N_{ys}, Q_y, M_y, and M_{ys}. These are shown in Fig. 7.

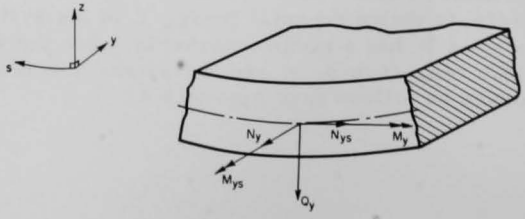

Fig. 7
Load Condition on $y = 0$

Conditions which represent a free edge will now be derived. The force N_y alone is able to produce extension in the y direction, so that if the edge is free, $N_y = 0$. Similarly, M_y alone can produce rotation about the x axis, so that $M_y = 0$. The moment M_{ys} can be represented by forces in the z or s direction. If we refer to Fig. 8, the couples acting on adjacent edge increments with centers C_1 and C_2 of equal length Δs may be replaced by forces. To a first approximation, the distance between C_1 and C_2 is Δs. Thus, if M_{ys} is the couple, per unit length, acting at C_1, then $(M_{ys} + (\partial M_{ys}/\partial s)\Delta s)$ acts at C_2. These couples are now represented by pairs of forces of equal strength having parallel lines of action and acting in opposition. Forces of magnitude $M_{ys}/\Delta s$ act normal to the tangent at C_1, and forces of magnitude $M_{ys}/\Delta s + \partial M_{ys}/\partial s$ act normal to the tangent at C_2.

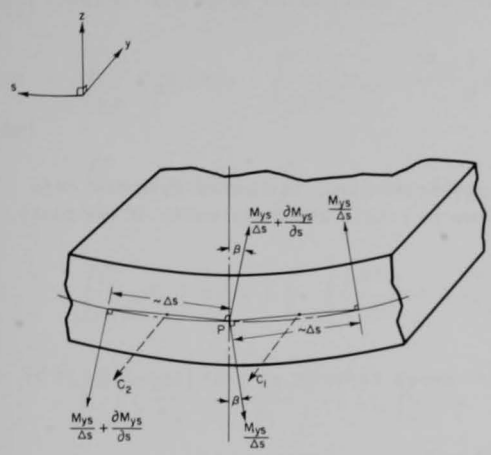

Fig. 8. Resolution of M_{ys} on $y = 0$

The forces are now resolved at P, between the increments. The force per unit length in the z direction is $(\partial M_{ys}/\partial s) \cos \beta$. Thus, if no forces act on the edge of the plate (β being small), $Q_y - \partial M_{ys}/\partial s = 0$. The force at P in the negative s direction is

$$\left(\frac{2M_{ys}}{\Delta s} + \frac{\partial M_{ys}}{\partial s}\right) \sin \beta \doteq \frac{2M_{ys}}{\Delta s} = \frac{M_{ys}}{\rho}, \tag{27}$$

so that the force per unit length is M_{ys}/ρ; hence, on a free edge, $N_{ys} + M_{ys}/\rho = 0$. Collecting all the conditions on a free edge at $y = 0$,

$$N_y = M_y = Q_y - \frac{\partial M_{ys}}{\partial s} = N_{ys} + \frac{M_{ys}}{\rho} = 0. \tag{28}$$

The same conditions will hold on $y = Y$.

2. Conditions on the Sides of the Plate

Several types of boundary conditions will be considered on $s = 0$ and $s = S$.

(1) On fixed edges,

$$u = v = w = \frac{\partial w}{\partial s} = 0. \tag{29}$$

(2) On pinned edges,

$$u = v = w = M_s = 0. \tag{30}$$

(3) A rotated edge may occur, i.e., the outer cylinder onto which the plate is fixed may be free to rotate about its axis. If the plate is fixed to the cylinder, then

$$v = \frac{\partial w}{\partial s} = 0.$$

The edge of the plate is not free to move radially so that (see Fig. 3) by geometric reasoning

$$u \cos(\theta - \varphi) - w \sin(\theta - \varphi) = 0.$$

Using Eq. (3) this can be simplified to give

$$u - w\theta|_S = 0$$

on $s = S$. In equilibrium the force component in the tangential direction will vanish, so that by similar reasoning

$$Q_s - N_s\theta|_S = 0.$$

Collecting these conditions, on $s = S$, we find

$$v = \frac{\partial w}{\partial s} = u - w\theta|_S = Q_s - N_s\theta|_S = 0. \tag{31}$$

The conditions in Eqs. (28) through (31) are readily expressed in terms of u, v, and w alone using Eq. (22). It emerges that conditions on $s = 0$ can be obtained by setting $S = 0$ in the above.

3. Variational Derivation

It is instructive to derive the boundary conditions from variational considerations. Equilibrium occurs when the energy integral has an extremum, that is, when its first variation vanishes. For arbitrary increment functions $h(s,y)$, $k(s,y)$, and $\ell(s,y)$ of u, v, and w, the components of δV

must individually vanish. Equation (A3) of Appendix A is now applied to a region R^*, which is bounded by Γ^*, made up only of lines parallel to the s and y axes. The first variation of V is thus given by

$$\delta V = \iint_{R^*} E_u h \, ds dy + \int_{\Gamma^*} \left[\left(N_{ys} + \frac{M_{ys}}{\rho} \right) h \, ds - \left(N_s - \frac{M_s}{\rho} \right) h \, dy \right]$$

$$+ \iint_{R^*} E_v k \, ds dy + \int_{\Gamma^*} \left(N_y k \, ds - N_{sy} k \, dy \right)$$

$$+ \iint_{R^*} E_w \ell \, ds dy + \int_{\Gamma^*} \left[\left(\frac{\partial M_y}{\partial y} + 2 \frac{\partial M_{sy}}{\partial s} \right) \ell - M_y \frac{\partial \ell}{\partial y} \right] ds$$

$$- \int_{\Gamma^*} \left[\left(\frac{\partial M_s}{\partial s} - 2 \frac{\partial M_{sy}}{\partial y} \right) \ell + M_s \frac{\partial \ell}{\partial s} \right] dy, \tag{31}$$

where $E_v = 0$, $E_u = 0$, or $E_w = 0$ give Eqs. (24). If δV vanishes, then not only must the integrals over R^* vanish for all h, k, and ℓ, but also the continuous integrals on Γ^*. The values of h, k, and ℓ, and the normal derivative of ℓ might vanish, giving clamped boundaries, or the natural boundary conditions might hold:

(1) On s = constant:

$$\left.\begin{array}{ll} \text{(i)} & N_s = \dfrac{M_s}{\rho} \\ \text{(ii)} & N_{sy} = 0 \\ \text{(iii)} & \dfrac{\partial M_s}{\partial s} - 2 \dfrac{\partial M_{sy}}{\partial y} = 0 \\ \text{(iv)} & M_s = 0 \end{array}\right\} \equiv \left\{ \begin{array}{l} M_s = N_s = 0 \\ N_{sy} = 0 \\ Q_s + \dfrac{\partial M_{sy}}{\partial y} = 0 \end{array} \right\} \tag{32}$$

(2) On y = constant:

$$\left.\begin{array}{ll} \text{(i)} & N_{ys} + \dfrac{M_{ys}}{\rho} = 0 \\ \text{(ii)} & N_y = 0 \\ \text{(iii)} & \dfrac{\partial M_y}{\partial y} + 2 \dfrac{\partial M_{sy}}{\partial s} = 0 \\ \text{(iv)} & M_y = 0 \end{array}\right\} \equiv \left\{ \begin{array}{l} M_y = N_y = 0 \\ N_{ys} + \dfrac{M_{ys}}{\rho} = 0 \\ Q_y - \dfrac{\partial M_{ys}}{\partial s} = 0 \end{array} \right\} \tag{33}$$

That these are precisely the free edge conditions can be seen by using Eqs. (6) and (23).

E. Methods of Solution

Three methods of solution will be discussed. First, a general finite-difference approach, then a Rayleigh-Ritz approach, and, finally, a discrete-element approach.

1. A Finite-difference Scheme

A finite-difference solution of the problem may be obtained by solving difference equations derived by replacing the derivatives in Eqs. (24) by central differences and the integrals by a quadrature formula. The boundary conditions must likewise be connected to linear constraints on values of u, v, and w at points of a finite-difference grid. The solution is obtained by solving a system of linear equations which has a band matrix. This approach has been used successfully for three-dimensional and plate problems.[7,8]

In Appendix B, details which allow finite-difference equations to be derived directly from the energy integral are given. If we use the definitions given in Appendix B, the energy integral in Eqs. (25) with the addition of the term $\iint wp\, dsdy$ can be approximated by the finite sum

$$
\begin{aligned}
V_{NM} = \left(\frac{S}{N}\right)\left(\frac{Y}{M}\right)\sum_{i=0}^{N}\sum_{j=0}^{M}\alpha_{ij}\Bigg[&\frac{6D}{h^2}\left\{\left(\bar{\Delta}_s u_{ij} - \frac{w_{ij}}{\rho_i} + \bar{\Delta}_y v_{ij}\right)^2 - 2(1-\nu)\left[\bar{\Delta}_y v_{ij}\left(\bar{\Delta}_s u_{ij} - \frac{w_{ij}}{\rho_i}\right) - \frac{1}{4}(\bar{\Delta}_s v_{ij} + \bar{\Delta}_y u_{ij})^2\right]\right\} \\
&+ \frac{D}{2}\left(\left[\Delta_s^2 w_{ij} + \bar{\Delta}_s\left(\frac{u_{ij}}{\rho_i}\right) + \Delta_y^2 w_{ij}\right]^2 - 2(1-\nu)\left\{\left[\Delta_s^2 w_{ij} + \bar{\Delta}_s\left(\frac{u_{ij}}{\rho_i}\right)\right]\left(\Delta_y^2 w_{ij}\right) - \left(\bar{\Delta}_s\bar{\Delta}_y w_{ij} + \frac{\bar{\Delta}_y u_{ij}}{\rho_i}\right)^2\right\}\right) \\
&- \frac{E\alpha}{1-\nu}\left\{\left(\bar{\Delta}_s u_{ij} - \frac{w_{ij}}{\rho_i} + \bar{\Delta}_y v_{ij}\right)T_{ij}^{*} - \left[\Delta_s^2 w_{ij} + \bar{\Delta}_s\left(\frac{u_{ij}}{\rho_i}\right) + \Delta_y^2 w_{ij}\right]T_{ij}^{**}\right\} + w_{ij}p_{ij}\Bigg],
\end{aligned}
\tag{34}
$$

where T_{ij}^{*}, T_{ij}^{**}, and p_{ij} are the values of T^*, T^{**}, and p at mesh points. The α_{ij} are defined in Appendix B.

The equations

$$
\frac{\partial V_{NM}}{\partial u_{ij}} = 0; \quad \frac{\partial V_{NM}}{\partial v_{ij}} = 0; \quad \frac{\partial V_{NM}}{\partial w_{ij}} = 0 \tag{35}
$$

will yield difference equations for an unsupported shell. The constraints representing fixed or tied boundaries must be imposed in the manner discussed in Appendix B. The derived difference equation may then be solved by overrelaxation, direct, or other methods.

This approach does not take advantage of the smoothness of the expected solutions. The matrix involved is not readily inverted. Iterative procedures are known to be very slow. Furthermore, error analyses which give bounds for errors are not available.

2. A Rayleigh-Ritz Approach

Details of this technique are given by Courant and Hilbert.[9] In the present context, u, v, and w are expressed as weighted sums of functions, each of which satisfies the boundary conditions. The weights which minimize the energy of the system are required. Equations relating these values can be obtained by differentiating the energy integral with respect to each weighting factor.

The functions used to represent u, v, and w could be general double Fourier series, but a reduction of the number of terms necessary can be achieved if products of beam functions are used. These functions are listed in Table I, which is reproduced from the work of Goldenveiser.[10]

TABLE I. Modes of Vibration of Beams

No.	Boundary Conditions for $x = 0$	Boundary Conditions for $x = \ell$	Corresponding Supported Beams	Analytic Expressions for the Function ϕ	Eigenvalues of the Parameter k: k_1	k_2	k_3	k_4	$k_{n\ldots}(n > 4)$	$\frac{4}{\ell}\int_0^\ell \phi_i^2\,dx$
1	$\phi = 0$, $\phi'' = 0$	$\phi = 0$, $\phi'' = 0$		$\sin kx$	$\frac{\pi}{\ell}$	$\frac{2\pi}{\ell}$	$\frac{3\pi}{\ell}$	$\frac{4\pi}{\ell}$	$\frac{n\pi}{\ell}$	$2[u_i'(0)]^2 = -2u_i'(\ell)u_i''(\ell)$
2	$\phi = 0$, $\phi' = 0$	$\phi = 0$, $\phi' = 0$		$\sin kx - \mathrm{sh}\,kx - \frac{\sin k\ell - \mathrm{sh}\,k\ell}{\cos k\ell - \mathrm{ch}\,k\ell}(\cos kx - \mathrm{ch}\,kx)$	$4.7300\frac{1}{\ell}$	$7.8532\frac{1}{\ell}$	$10.9956\frac{1}{\ell}$	$14.1372\frac{1}{\ell}$	$\frac{2n+1}{2}\frac{\pi}{\ell}$	$[u_i''(0)]^2$
3	$\phi'' = 0$, $\phi''' = 0$	$\phi'' = 0$, $\phi''' = 0$		$\sin kx + \mathrm{sh}\,kx - \frac{\sin k - \mathrm{sh}\,k}{\cos k - \mathrm{ch}\,k}(\cos kx + \mathrm{ch}\,kx)$	$4.7300\frac{1}{\ell}$	$7.8532\frac{1}{\ell}$	$10.9956\frac{1}{\ell}$	$14.1372\frac{1}{\ell}$	$\frac{2n+1}{2}\frac{\pi}{\ell}$	$[u_i(0)]^2$
4	$\phi = 0$, $\phi' = 0$	$\phi'' = 0$, $\phi''' = 0$		$\sin kx - \mathrm{sh}\,kx - \frac{\sin k\ell + \mathrm{sh}\,k\ell}{\cos k\ell + \mathrm{ch}\,k\ell}(\cos kx - \mathrm{ch}\,kx)$	$1.8751\frac{1}{\ell}$	$4.6941\frac{1}{\ell}$	$7.8548\frac{1}{\ell}$	$10.9955\frac{1}{\ell}$	$\frac{2n-1}{2}\frac{\pi}{\ell}$	$[u_i''(0)]^2 = [u_i(\ell)]^2$
5	$\phi = 0$, $\phi'' = 0$	$\phi = 0$, $\phi' = 0$		$\sin kx - \frac{\sin k\ell}{\mathrm{sh}\,k\ell}\mathrm{sh}\,kx$	$3.9266\frac{1}{\ell}$	$7.0685\frac{1}{\ell}$	$10.2102\frac{1}{\ell}$	$13.3520\frac{1}{\ell}$	$\frac{4n+1}{4}\frac{\pi}{\ell}$	$-2u_i'(0)u_i''(0) = [u_i''(\ell)]^2$
6	$\phi = 0$, $\phi'' = 0$	$\phi'' = 0$, $\phi''' = 0$		$\sin kx + \frac{\sin k\ell}{\mathrm{sh}\,k\ell}\mathrm{sh}\,kx$	$3.9266\frac{1}{\ell}$	$7.0685\frac{1}{\ell}$	$10.2102\frac{1}{\ell}$	$13.3520\frac{1}{\ell}$	$\frac{4n+1}{4}\frac{\pi}{\ell}$	$-2u_i'(0)u_i''(0) = [u_i(\ell)]^2$

Note: The last column of the table gives the values of the integrals over the squares of the functions (Rayleigh's formula). In these relations $u_i(z) = \phi_i(z/k)$. Primes denote differentiation with respect to z.

The boundary conditions for fixed edges on s = 0 and s = S can be satisfied exactly by using one beam function to represent the s-dependent parts of each product. The y-dependent parts, however, are not properly represented by case 3 of Table I, which gives the beam function for a beam with free ends. Some combination of the first three beam functions would be necessary. This technique also can be used to represent the s-dependence when the edges on s = 0 and s = S are pinned.

This approach and a variant of it (i.e., a single Fourier series is used to reduce the problem to one of solving a set of ordering differential equations[11]) have been used successfully for plate and shell problems. The approach has the disadvantage that a completely different formulation is necessary for different types of boundary conditions.

3. A Finite-element Approach

A method which divides the plate into rectangular regions and represents the deformations by bicubic or even biquintic polynomials has certain numerical advantages. The linear equations, which are eventually solved, have a positive definite matrix, and the method is adaptable with respect to boundary conditions and choice of mesh lines.

If the plate, region R, is divided by (M-1) lines $y = Y_j$ and (N-1) lines $s = S_i$, then element R_{ij} of the plate is defined

$$R_{ij} := \{(s,y)/ \quad S_{i-1} \le s \le S_i,\ Y_{j-1} \le y \le Y_j\}, \tag{36}$$

where $S_0 = Y_0 = 0$, $Y_M = Y$, and $S_M = S$. If bicubic approximations are used, then for $(s,y) \in R_{ij}$

$$\left.\begin{aligned} u(s,y) &= \sum_{r=0}^{3}\sum_{t=0}^{3} \alpha_{rt}^{ij} s^r y^t; \\ v(s,y) &= \sum_{r=0}^{3}\sum_{t=0}^{3} \beta_{rt}^{ij} s^r y^t; \\ w(s,y) &= \sum_{r=0}^{3}\sum_{t=0}^{3} \gamma_{rt}^{ij} s^r y^t. \end{aligned}\right\} \tag{37}$$

Following Birkoff and DeBoor,[12] the sixteen coefficients α_{rt}^{ij} can be obtained from values of u, $\frac{\partial u}{\partial s}$, $\frac{\partial u}{\partial y}$, and $\frac{\partial^2 u}{\partial s\,\partial y}$ at the corners of R_{ij}. Similar remarks apply to β_{rt}^{ij} and γ_{rt}^{ij}. Further details appear in Appendix C. It emerges that twelve values of u, v, and w and their first and cross derivatives at each intersection of the lines $y = Y_j$ and $s = S_i$ allow calculation of all the coefficients α_{rt}^{ij}, β_{rt}^{ij}, and γ_{rt}^{ij}, where $r = 0(1)3$; $t = 0(1)3$; $i = 1(1)N$; and $j = 1(1)M$. When so defined, the piecewise bicubic approximation has continuous first derivatives and cross derivatives.

First, second, third, and some higher derivatives of u, v, and w can be approximated in each R_{ij} by differentiating Eqs. (37). These values can be inserted in an energy integral, and the integration may be carried out

explicitly over each R_{ij}. A minimum of the sum of these integrals is required. This sum can be expressed in terms of the $48(N+1)(M+1)$ values of u, v, w, and their derivatives at grid points. Differentiation of the sum with respect to each of these values will yield an equation relating values of u, v, w, and their derivatives at nine points (in the interior). If the energy integral is a quadratic expression, then the equations derived are linear.

Constraints on the boundaries will reduce the number of values of u, v, w, and their derivatives which can be considered independent. The constraint replaces the unobtainable derivative of the sum of integrals; the dependence modifies the other relations (see Appendix B).

Nevertheless, this approach has the disadvantage that the equations to be solved can be obtained only after considerable symbol manipulation (see Appendix C). In the authors' opinion, anticipated gains in speed of numerical solution and adaptability make it the best of the three approaches discussed. For example, the energy integral could be modified to represent the plate near $s = 0$ better by changing the calculation only for elements adjacent to $s = 0$.

III. FINAL REMARKS

Considerable effort has been expended in consideration of the proper procedure to be used in the evaluation of numerical results of the two-variable cylindrical involute shell. Due to the specific nature of the problem, the uncertainty of the actual boundary conditions at the sides of the plates, the finite-element numerical procedure has been recommended. It is unfortunate, however, that due to the untimely termination of the AARR project this study could not be finished. Of interest would have been not only the final results of the involute plate, but also the effectiveness of the proposed numerical method.

For the purpose of those who might pursue this investigation further, a point of interest may be mentioned. It appears that at least two other derivations of cylindrical-shell equations, similar to Eqs. (24), were made by Timoshenko[5] and Wang.[14] The differences between all the deduced equations resides in only three terms. It would be interesting to know the effect of these slightly different terms on the numerical solution.

The inclusion of other factors, such as the inhomogeneity of the fuel plate, time-dependent loading conditions, and the possibility of buckling could be considered in subsequent stages of some future analysis. These factors, when incorporated into the analysis, would yield an even more realistic prediction of the actual behavior of the fuel plate.

APPENDIX A

Variational Methods (see Gelfand and Fomin[15])

If $V[u]$ is a functional on a region R with boundary Γ:

$$V[u] = \iint_R F(s,y,u,u_s,u_y,u_{ss},u_{sy},u_{yy})\, ds dy, \tag{A.1}$$

then by integrating by parts and use of Green's theorem, the first variation of $V[u]$ is obtained as follows:

$$\begin{aligned}
\delta V &= \iint_R \left(F_u h + F_{u_s} \frac{\partial h}{\partial s} + F_{u_y} \frac{\partial h}{\partial y} + F_{u_{ss}} \frac{\partial^2 h}{\partial s^2} + F_{u_{sy}} \frac{\partial^2 h}{\partial s \partial y} + F_{u_{yy}} \frac{\partial^2 h}{\partial y^2} \right) ds dy \\
&= \iint_R \left[F_u - \frac{\partial}{\partial s}\left(F_{u_s}\right) - \frac{\partial}{\partial y}\left(F_{u_y}\right) + \frac{\partial^2}{\partial s^2}\left(F_{u_{ss}}\right) + \frac{\partial^2}{\partial s \partial y}\left(F_{u_{sy}}\right) + \frac{\partial^2}{\partial y^2}\left(F_{u_{yy}}\right) \right] h\, ds dy \\
&+ \int_\Gamma \left[F_{u_y} h + \frac{\partial}{\partial y}\left(F_{u_{yy}}\right) h - F_{u_{yy}} \frac{\partial h}{\partial y} + \frac{1}{2} \frac{\partial}{\partial s}\left(F_{u_{sy}}\right) h - \frac{1}{2} F_{u_{sy}} \frac{\partial h}{\partial s} \right] ds \\
&- \int_\Gamma \left[F_{u_s} h + \frac{\partial}{\partial s}\left(F_{u_{ss}}\right) h - F_{u_{ss}} \frac{\partial h}{\partial s} + \frac{1}{2} \frac{\partial}{\partial y}\left(F_{u_{sy}}\right) h - \frac{1}{2} F_{u_{sy}} \frac{\partial h}{\partial y} \right] dy.
\end{aligned} \tag{A.2}$$

The function h is an arbitrary (sufficiently smooth) increment function and the cross derivative is represented in antisymmetric form.

If we now introduce coordinates t tangential to Γ and n, drawn outward, normal to Γ, such that the n-axis makes an angle ζ with the s-axis, then Eq. (A.2) can be written in the form

$$\begin{aligned}
\delta V &= \iint_R E\, ds dy + \int_\Gamma \left(\cos^2 \zeta F_{u_{ss}} + \sin^2 \zeta F_{u_{yy}} + \sin \zeta \cos \zeta\, F_{u_{sy}} \right) \frac{\partial h}{\partial n}\, dt \\
&- \int_\Gamma \left\{ \frac{\partial}{\partial t} \left[\cos \zeta \sin \zeta \left(F_{u_{yy}} - F_{u_{ss}} \right) + \frac{1}{2} (\cos^2 \zeta - \sin^2 \zeta)\, F_{u_{sy}} \right] \right. \\
&\left. + \cos \zeta \left[\frac{\partial}{\partial s}\left(F_{u_{ss}}\right) + \frac{1}{2} \frac{\partial}{\partial y}\left(F_{u_{sy}}\right) \right] + \sin \zeta \left[\frac{\partial}{\partial y}\left(F_{u_{yy}}\right) + \frac{1}{2} \frac{\partial}{\partial s}\left(F_{u_{sy}}\right) \right] \right\} h\, dt,
\end{aligned} \tag{A.3}$$

where E replaces the longer expression in Eq. (A.2). The derivatives $\partial h/\partial t$ have been eliminated in Eq. (A.3) by integrating by parts and the fact that $\int_\Gamma dG = 0$ for any G, since Γ is closed.

APPENDIX B

Derivation of Difference Equations by a Variational Approach

Let R be a rectangular region with boundary Γ in the (s,y)-plane defined as follows:

$$R := \{(s,y)/ \quad 0 \le s \le S, \ 0 \le y \le Y\}. \tag{B.1}$$

Let R_{NM} be a rectangular array of points defined as follows:

$$R_{NM} := \{(i,j)/ \quad 2i \text{ and } 2j \text{ are integers and } -1 \le i \le N+1, \ -1 \le j \le M+1\}. \tag{B.2}$$

If $h = S/N$ and $k = Y/M$, then the mapping $s = ih$, $y = jk$ maps R_{NM} into the (s,y)-plane. If R^*_{NM} is that part of R_{NM} which maps onto R, then

$$R^*_{NM} := \{(i,j) \in R_{NM}/ \quad 0 \le i \le N, \ 0 \le j \le M\}. \tag{B.3}$$

The extremal values of i and j in R^*_{NM} map onto Γ. If u is a function defined on R, then we may define it on R^*_{NM}:

$$u := u(ih, jk). \tag{B.4}$$

We shall extend the definition to the whole (i,j)-plane by requiring that $u_{i,j} = 0$ for $(i,j) \notin R_{NM}$. The definition of values at points in R_{NM} and not in R^*_{NM} will be discussed later. Let the following difference operators by defined for factors defined on R_{NM}:

$$\Delta_s u := \frac{u_{i+1/2,j} - u_{i-1/2,j}}{h}; \tag{B.5}$$

$$\bar{\Delta}_s u := \frac{1}{2}\left(\Delta_s u_{i+1/2,j} + \Delta_s u_{i-1/2,j}\right) = \frac{u_{i+1,j} - u_{i-1,j}}{2h}; \tag{B.6}$$

$$\Delta_y u := \frac{u_{i,j+1/2} - u_{i,j-1/2}}{k}; \tag{B.7}$$

$$\bar{\Delta}_y u := \frac{1}{2}\left(\Delta_y u_{i,j+1/2} + \Delta u_{i,j-1/2}\right) = \frac{u_{i,j+1} - u_{i,j-1}}{2k}. \tag{B.8}$$

Since these operators yield functions defined in the (i,j) plane, they may be again applied. We shall write

$$\Delta_s^2 u_{i,j} := \Delta_s \Delta_s u_{i,j} = \frac{u_{i+1,j} - 2u_{i,j} + u_{i-1/2,j}}{h^2}.$$

Similarly,

$$\Delta_y^2 \equiv \Delta y \Delta y.$$

Consider now the problem discussed in Appendix A, i.e., that of defining a function u which minimizes an integral V of a function F of s, y, u, and first and second derivatives of u.

We shall consider u defined on the region R.

$$V := \int_R F\left(s, y, u, \frac{\partial u}{\partial s}, \frac{\partial u}{\partial y}, \frac{\partial^2 u}{\partial s^2}, \frac{\partial^2 u}{\partial s \partial y}, \frac{\partial^2 u}{\partial y^2}\right) ds dy. \tag{B.9}$$

We now define V_{NM}, an approximation to V, in which the integration is approximated by trapezoidal quadrature and the derivatives by central differences:

$$V_{NM} := hk \sum_{i=0}^{N} \sum_{j=0}^{M} \alpha_{i,j} \tilde{F}_{i,j}, \tag{B.10}$$

where

$$\begin{aligned} \alpha_{i,j} &= 1 \text{ for } 1 \le i < N, \quad 1 \le j < M \\ &= \tfrac{1}{2} \text{ for } i = 0 \text{ or } N, \quad 1 \le j < M \\ &\qquad \text{for } j = 0 \text{ or } M, \quad 1 \le i < N \\ &= \tfrac{1}{4} \text{ for } (0,0), (0,M), (N,M), (N,0) \end{aligned}$$

and

$$\tilde{F}_{ij} = F\left(ih, jk, u_{i,j}, \bar{\Delta}_s u_{i,j}, \bar{\Delta}_y u_{i,j}, \Delta_s^2 u_{i,j}, \Delta_y^2 u_{i,j}, \bar{\Delta}_s \bar{\Delta}_y u_{i,j}\right). \tag{B.11}$$

The summation in Eq. (B.10) is over integral values of i and j. The difference operators in Eq. (B.11) do not require evaluation of $u_{i,j}$ at points at which i and j are not integers, but all the other points of R_{NM} are involved. The approximation to V, V_{MN} is thus a function of $(N+3) \times (M+3)$ values of $u_{i,j}$. If F is a Lipschitz continuous function of s, y, u, and its derivatives, then errors arising from the replacement of F by $\tilde{F}_{i,j}$ are of the same order as those arising in the quadrature, both leading to errors $0(h^2 + k^2)$ in V_{NM}.

If every value $u_{i,j}$ is free to change, the minimum of V_{NM} is determined by $(N+3) \times (M+3)$ equations:

$$\frac{\partial V_{NM}}{\partial u_{i,j}} = 0; \qquad (i,j) \in R_{NM}. \tag{B.12}$$

In theory, this system of equations can be solved for the u_{ij}. If, however, $u_{i,j} = \bar{u}_{i,j}$, a constant value, then Eq. (B.12) has no meaning and the equation $u_{i,j} = \bar{u}_{i,j}$ is available instead. More generally, if a constraint of the form

$$u_{p,q} = f_{p,q}(\{u_{s,t}\}) \text{ for } (s,t) \in \hat{R}^{pq}_{NM},\ \hat{R}^{pq}_{NM} \subset R_{NM} \tag{B.13}$$

is imposed, then $\dfrac{\partial V_{NM}}{\partial u_{pq}}$ is replaced in the system of equations by (B.13) and, for

$$(s,t) \in \hat{R}^{pq}_{NM},\ \frac{\partial V_{NM}}{\partial u_{s,t}} = 0,$$

is replaced by

$$\frac{\partial V_{NM}}{\partial u_{s,t}} + \frac{\partial V_{NM}}{\partial u_{p,q}} \frac{\partial f_{p,q}}{\partial u_{s,t}} = 0. \tag{B.14}$$

The constraints of special interest are those of the form

$$\left.\begin{aligned} &A_{i,j}u_{i,j} + B_{i,j}\frac{(u_{i+1,j} - u_{i-1,j})}{2h} = C_{i,j} \\ &\text{when } i = 0 \text{ or } N, \text{ and} \\ &A'_{i,j}u_{i,j} + B'_{i,j}\frac{(u_{i,j+1} - u_{i,j-1})}{2k} = C'_{i,j} \end{aligned}\right\} \tag{B.15}$$

when $j = 0$ or M.

These correspond to relationships on Γ between u and $\partial u/\partial n$, the derivative of u normal to Γ. This correspondence indicates that it is desirable to define, implicitly, the values of $u_{i,j}$ for integers i,j, which are in R_{NM} but not in R^*_{NM}. Accordingly,

$$\left.\begin{aligned} &\frac{u_{1,j} - u_{-1,j}}{2h} = \frac{\partial u}{\partial s}(0,jk); \\ &\frac{u_{N+1,j} - u_{N-1,j}}{2h} = \frac{\partial u}{\partial s}(S,jk); \\ &\frac{u_{i,1} - u_{i,-1}}{2k} = \frac{\partial u}{\partial y}(ih,0); \\ &\frac{u_{i,M+1} - u_{i,M-1}}{2k} = \frac{\partial u}{\partial y}(ih,Y). \end{aligned}\right\} \tag{B.16}$$

If it is desired to implement boundary conditions involving higher derivatives, then the formal definition must make use of them in a similar fashion.

The discussion will not be confined to functions F which are quadratic in u and its derivatives. Let the translation operators E_s and E_y be defined as

$$E_s^p u_{i,j} := u_{i+p,j}$$

and

$$E_y^p u_{i,j} := u_{i,j+p} \tag{B.17}$$

for all p such that 2p is an integer. The difference operators used in Eq. (B.11) can be written in the following form:

$$\left.\begin{aligned}
\bar{\Delta}_s &\equiv \frac{1}{2h}(E_s - E_s^{-1}); \\
\bar{\Delta}_y &\equiv \frac{1}{2k}(E_y - E_y^{-1}); \\
\Delta_s^2 &\equiv \frac{1}{h^2}(E_s - 2 + E_s^{-1}); \\
\Delta_y^2 &\equiv \frac{1}{k^2}(E_y - 2 + E_y^{-1}); \\
\bar{\Delta}_s \bar{\Delta}_y &\equiv \frac{1}{4hk}(E_s - E_s^{-1})(E_y - E_y^{-1}).
\end{aligned}\right\} \tag{B.18}$$

If F is a quadratic expression, then these operators or products of them may appear. We first prove three general theorems.

Theorem I

If $u_{i,j}$ and $x_{i,j}$ are defined for all (i,j) such that 2i and 2j are integers and vanish outside R_{NM}, and if operators Δ_s and Δ_y are defined in terms of the translation operators defined in Eq. (B.17) as follows:

$$\Delta_s \equiv \frac{1}{h}(E_s^{1/2} - E_s^{-1/2}); \quad \Delta_y \equiv \frac{1}{h}(E_y^{1/2} - E_y^{-1/2}), \tag{B.19}$$

and if V_{NM} is a linear function of the $u_{i,j}$:

$$V_{NM} = \sum_{i=0(1/2)N} \sum_{j=0(1/2)M} x_{i,j}(\Delta_s^p \Delta_y^q u_{i,j}), \tag{B.20}$$

where

$$\Delta_s^p = \left(\frac{E^{1/2} - E^{-1/2}}{h}\right)^p \text{ etc.,}$$

then for $(r,t) \in R_{NM}$, and any integral values of p and q,

$$\frac{\partial V_{NM}}{\partial u_{r,t}} = (-1)^{p+q} (\Delta_s^p \Delta_y^q x_{r,t}).$$

Proof.

The coefficient of $u_{r,t}$ in an expression of the form

$$V' = \sum_{i=0(1/2)N} \sum_{j=0(1/2)M} x_{i,j}(E_s^p E_y^q u_{i,j}) \tag{B.21}$$

is readily seen to be

$$E_s^{-p} E_y^{-q} x_{r,t}.$$

Now Eq. (B.20) is a sum of terms such as V'. The differentiation picks the coefficient of $u_{r,t}$, so

$$\frac{\partial V_{NM}}{\partial u_{r,t}} = \left(\frac{E_s^{-1/2} - E_s^{1/2}}{h}\right)^p \left(\frac{E_y^{-1/2} - E_y^{1/2}}{k}\right)^q x_{r,t} = (-1)^{p+q} (\Delta_s^p \Delta_y^q x_{r,t}),$$

which proves the theorem.

Theorem II

If the conditions of Theorem I hold and V_{NM} is a sum of quadratic expressions of the form

$$V_{NM} = \sum_{i=0(1/2)N} \sum_{j=0(1/2)M} x_{i,j}(\Delta_s^p \Delta_y^q u_{i,j})(\Delta_s^m \Delta_y^n u_{i,j}), \tag{B.22}$$

then

$$\frac{\partial V_{NM}}{\partial u_{r,t}} = (-1)^{p+q} \Delta_s^p \Delta_y^q [x_{r,t} \Delta_s^m \Delta_y^n u_{r,t}] + (-1)^{m+n} \Delta_s^m \Delta_y^n [x_{r,t} \Delta_s^p \Delta_y^q u_{r,t}] \tag{B.23}$$

for $(r,t) \in R_{NM}$ and integral values of p, q, m and n.

Proof.

Differentiation of each product yields the sum of two expressions to which the method of proof used for Theorem I applies.

Theorem III

Let $u_{i,j}$ and $x_{i,j}$ be defined as in Theorem I; then consider V_{NM} defined as follows:

$$V_{NM} = \sum_{i=0(1)N} \sum_{j=0(1)M} x_{i,j}(\bar{\Delta}_s^a \bar{\Delta}_y^b \Delta_s^{2c} \Delta_y^{2d} u_{i,j})(\bar{\Delta}_s^e \bar{\Delta}_y^f \Delta_s^{2g} \Delta_y^{2h} u_{i,j}), \tag{B.24}$$

where

$$\bar{\Delta}_s u_{i,j} = \tfrac{1}{2}(\Delta_s u_{i+1/2,j} + \Delta_s u_{i-1/2,j}) = \tfrac{1}{2}(E^{1/2} + E^{-1/2})\, \Delta_s u_{i,j}.$$

Then

$$\frac{\partial V_{NM}}{\partial u_{r,t}} = (-1)^{a+b}\, \bar{\Delta}_s^a \bar{\Delta}_y^b \Delta_s^{2c} \Delta_y^{2d} \left[x_{r,t} \bar{\Delta}_s^e \bar{\Delta}_y^f \Delta_s^{2e} \Delta_y^{2h} u_{r,t}\right]$$

$$+ (-1)^{e+f}\, \bar{\Delta}_s^e \bar{\Delta}_y^f \Delta_s^{2g} \Delta_y^{2h} \left[x_{r,t} \bar{\Delta}_s^a \bar{\Delta}_y^b \Delta_s^{2c} \Delta_y^{2d} u_{r,t}\right]. \tag{B.25}$$

Proof.

We note that

$$\bar{\Delta}_s = \tfrac{1}{2}(E_s^{1/2} + E_s^{-1/2})\, \Delta_s$$

and

$$\bar{\Delta}_y = \tfrac{1}{2}(E_y^{1/2} + E_y^{-1/2})\, \Delta_y,$$

so that the method of proof of Theorem I can be used without change.

The following is a sample of the special cases of Eq. (B.25), which are of interest when F is a quadratic function of U and its derivatives. (The arbitrary function $X(s,y)$ takes values $x_{r,t}$ at (r,t). The symbol x is used to denote $\alpha_{r,t} x_{r,t}$. The usage of $\alpha_{r,t}$ is given in Eq. (B.10). For convenience, the subscripts are dropped on u, and V is used to denote V_{NM}/hk.)

$$F = X\frac{\partial U}{\partial s}: \ \frac{\partial V}{\partial u} = -\bar{\Delta}_s x; \tag{B.26}$$

$$F = X\frac{\partial^2 U}{\partial s^2}: \ \frac{\partial V}{\partial u} = \Delta_s^2 x; \tag{B.27}$$

$$F = X\frac{\partial^2 U}{\partial s\,\partial y}: \ \frac{\partial V}{\partial u} = \bar{\Delta}_s \bar{\Delta}_y x; \tag{B.28}$$

$$F = X\left(\frac{\partial U}{\partial s}\right)^2: \ \frac{\partial V}{\partial u} = -2\bar{\Delta}_s(x\bar{\Delta}_s u) = -2x\bar{\Delta}_s^2 u \quad \text{(if x is constant);} \tag{B.29}$$

$$F = X\frac{\partial U}{\partial s}\frac{\partial U}{\partial y}: \ \frac{\partial V}{\partial u} = -\bar{\Delta}_s(x\bar{\Delta}_y u - \bar{\Delta}_y x\bar{\Delta}_s u) = -2x\bar{\Delta}_s\bar{\Delta}_y u \quad \text{(if x is constant);} \tag{B.30}$$

$$F = X\frac{\partial U}{\partial s}\frac{\partial^2 U}{\partial s^2}: \ \frac{\partial V}{\partial u} = -\bar{\Delta}_s x\Delta_s^2 u + \Delta_s^2 x\bar{\Delta}_s u = 0 \quad \text{(if x is constant);} \tag{B.31}$$

$$F = X\frac{\partial U}{\partial s}\frac{\partial^2 U}{\partial s\,\partial y}: \ \frac{\partial V}{\partial u} = -\bar{\Delta}_s(x\bar{\Delta}_s\bar{\Delta}_y u) + \bar{\Delta}_s\bar{\Delta}_y(x\Delta_s u) = 0 \quad \text{(if x is constant);} \tag{B.32}$$

$$F = X\left(\frac{\partial^2 U}{\partial s^2}\right)^2: \ \frac{\partial V}{\partial u} = 2\Delta_s^2(x\Delta_s^2 u) = 2x\Delta_s^4 u \quad \text{(if x is constant);} \tag{B.33}$$

$$F = X\left(\frac{\partial^2 U}{\partial s\,\partial y}\right)^2: \ \frac{\partial V}{\partial u} = 2\bar{\Delta}_s\bar{\Delta}_y(x\bar{\Delta}_s\bar{\Delta}_y u) = 2x\bar{\Delta}_s^2\bar{\Delta}_y^2 u \quad \text{(if x is constant);} \tag{B.34}$$

$$F = X\left(\frac{\partial^2 U}{\partial s^2}\right)\left(\frac{\partial^2 U}{\partial s\,\partial y}\right): \ \frac{\partial V}{\partial u} = \Delta_s^2(x\bar{\Delta}_s\bar{\Delta}_y u) + \bar{\Delta}_s\bar{\Delta}_y(x\Delta_s^2 u) = 2x\bar{\Delta}_s\bar{\Delta}_y\Delta_s^2 u$$

(if x is constant). (B.35)

APPENDIX C

Solution of Elliptic P.D.E.s Using a Finite-element Approach

Let R be the region $0 \le s \le S$, $0 \le y \le Y$, and let it be divided into $N \times M$ rectangles R_{ij} by the lines $y = Y_j$, $j = 1, 2, \ldots, M-1$ and $s = S_i$, $i = 1, 2, \ldots, N-1$. Rectangle R_{ij} is bounded by $y = Y_{j-1}$, $y = Y_j$, $s = S_{i-1}$, and $s = S_i$ for $1 \le i \le N$ and $1 \le j \le M$. (We define $S_0 = Y_0 = 0$, $S_N = S$, and $Y_M = Y$).

Let u be a piecewise bicubic approximation in R to U, the solution of an elliptic equation with suitable boundary conditions on the boundary of R. We define u as follows:

$$u(s,y) = \sum_{r=0}^{3} \sum_{t=0}^{3} \alpha_{rt}^{ij} \left(\frac{s - \frac{S_i + S_{i-1}}{2}}{\frac{S_i - S_{i-1}}{2}} \right)^r \left(\frac{y - \frac{Y_j + Y_{j-1}}{2}}{\frac{Y_j - Y_{j-1}}{2}} \right)^t \tag{C.1}$$

for $(s,y) \in R_{i,j}$. For convenience, we write

$$\xi_i = \frac{S_i - S_{i-1}}{2}; \quad \eta_j = \frac{Y_j - Y_{j-1}}{2}. \tag{C.2}$$

The piecewise bicubic approximation in Eq. (C.1) is continuous. It has a continuous first derivative (and cross derivative) if the coefficients α_{rt}^{ij} are determined by requiring that values of u, $\frac{\partial u}{\partial s}$, $\frac{\partial u}{\partial y}$, and $\frac{\partial^2 u}{\partial s \partial y}$ given by approximation (C.1) on adjacent rectangles should agree at their common corner points. On $y = Y_j$, for $1 \le j \le M-1$, between $R_{i,j}$ and $R_{i,j+1}$, u is defined by a cubic in s in both $R_{i,j}$ and $R_{i,j+1}$. But both cubics satisfy the same four conditions. At points (S_i, Y_j) and (S_{i-1}, Y_j) they yield the same values of u and $\frac{\partial u}{\partial s}$. Since four coefficients are involved, the cubic expressions are identical and u and $\frac{\partial u}{\partial s}$ are continuous across $y = Y_j$. Similarly, $\frac{\partial u}{\partial y}$ has a unique cubic form on $y = Y_j$. Analogous arguments yield continuity of u and its first derivatives across $s = S_i$. It follows from Eq. (C.1) that

$$\left.\begin{aligned} u(S_i, Y_j) &= \sum_{r=0}^{3} \sum_{t=0}^{3} \alpha_{rt}^{ij}; \\ u(S_{i-1}, Y_j) &= \sum_{r=0}^{3} \sum_{t=0}^{3} (-1)^r \alpha_{rt}^{ij}; \end{aligned}\right\} \tag{C.3}$$

(Contd.)

$$\left.\begin{aligned}
u(S_i, Y_{j-1}) &= \sum_{r=0}^{3} \sum_{t=0}^{3} (-1)^t \alpha_{rt}^{ij}; \\
u(S_{i-1}, Y_{j-1}) &= \sum_{r=0}^{3} \sum_{t=0}^{3} (-1)^r (-1)^t \alpha_{rt}^{ij}; \\
\frac{\partial u}{\partial s}(S_i, Y_j) &= \sum_{r=0}^{2} \sum_{t=0}^{3} \frac{(r+1)}{\xi_i} \alpha_{r+1,t}^{ij}; \\
\frac{\partial u}{\partial s}(S_{i-1}, Y_j) &= \sum_{r=0}^{2} \sum_{t=0}^{3} (-1)^r \frac{r}{\xi_i} \alpha_{r+1,t}^{ij}; \quad \text{etc.}; \\
\frac{\partial u}{\partial y}(S_i, Y_j) &= \sum_{r=0}^{3} \sum_{t=0}^{2} \frac{(t+1)}{\eta_j} \alpha_{r,t+1}^{ij}; \quad \text{etc.}; \\
\frac{\partial^2 u}{\partial s\, \partial y}(S_i, Y_j) &= \sum_{r=0}^{2} \sum_{t=0}^{2} \frac{(r+1)(t+1)}{\xi_i \eta_j} \alpha_{r+1,t+1}^{ij}; \quad \text{etc.}
\end{aligned}\right\} \quad \begin{matrix}\text{(Contd.)} \\ \text{(C.3)}\end{matrix}$$

We now define $16 \times M \times N$ elements ρ_{pq}^{ij}, $p = 1(1)4$, $q = 1(1)4$ as follows:

$$\left.\begin{aligned}
\rho_{1,q}^{ij} &= \frac{1}{4} \sum_{r=0}^{1} \sum_{t=0}^{1} c_q^{ij} f_{q,r,t}^{ij}; \\
\rho_{2,q}^{ij} &= \frac{1}{4} \sum_{r=0}^{1} \sum_{t=0}^{1} (-1)^r c_q^{ij} f_{q,r,t}^{ij}; \\
\rho_{3,q}^{ij} &= \frac{1}{4} \sum_{r=0}^{1} \sum_{t=0}^{1} (-1)^t c_q^{ij} f_{q,r,t}^{ij}; \\
\rho_{4,q}^{ij} &= \frac{1}{4} \sum_{r=0}^{1} \sum_{t=0}^{1} (-1)^r (-1)^t c_q^{ij} f_{q,r,t}^{ij},
\end{aligned}\right\} \quad \text{(C.4)}$$

where

$$c_1^{ij} = 1; \quad c_2^{ij} = \xi_i; \quad c_3^{ij} = \eta_j; \quad c_4^{ij} = \xi_i \eta_j, \qquad \text{(C.5)}$$

and

$$\left.\begin{aligned} f^{ij}_{1,r,t} &= u(S_{i-r}, Y_{j-t}); \quad f^{ij}_{2,r,t} = \frac{\partial u}{\partial s}(S_{i-r}, Y_{j-t}); \\ f^{ij}_{3,r,t} &= \frac{\partial u}{\partial y}(S_{i-r}, Y_{j-t}); \quad f^{ij}_{4,r,t} = \frac{\partial^2 u}{\partial s\, \partial y}(S_{i-r}, Y_{j-t}). \end{aligned}\right\} \tag{C.6}$$

We may now insert Eqs. (C.3) into Eqs. (C.4) and obtain (dropping superscripts ij)

$$\left.\begin{aligned} \rho_{p,1} &= \sum_{r=0}^{3} \sum_{t=0}^{3} d_{p,r,t}\alpha_{r,t}; \\ \rho_{p,2} &= \sum_{r=0}^{2} \sum_{t=0}^{3} (r+1)\, d_{p,r,t}\alpha_{r+1,t}; \\ \rho_{p,3} &= \sum_{r=0}^{3} \sum_{t=0}^{2} (t+1)\, d_{p,r,t}\alpha_{r,t+1}; \\ \rho_{p,4} &= \sum_{r=0}^{2} \sum_{t=0}^{2} (r+1)(t+1)\, d_{p,r,t}\alpha_{r+1,t+1}, \end{aligned}\right\} \tag{C.7}$$

for p = 1, 2, 3, 4, where

$$d_{1,r,t} = \frac{[1+(-1)^r][1+(-1)^t]}{4} \begin{aligned} &= 1 \text{ for r even, t even,} \\ &= 0 \text{ in other cases;} \end{aligned}$$

$$d_{2,r,t} = \frac{[1-(-1)^r][1+(-1)^t]}{4} \begin{aligned} &= 1 \text{ for r odd, t even,} \\ &= 0 \text{ in other cases;} \end{aligned}$$

$$d_{3,r,t} = \frac{[1+(-1)^r][1-(-1)^t]}{4} \begin{aligned} &= 1 \text{ for r even, t odd,} \\ &= 0 \text{ in other cases;} \end{aligned}$$

$$d_{4,r,t} = \frac{[1-(-1)^r][1-(-1)^t]}{4} \begin{aligned} &= 1 \text{ for r odd, t odd,} \\ &= 0 \text{ in other cases.} \end{aligned}$$

Equations (C.7) thus consist of four sets of four equations, each set being independent of the others. The solution can be written as follows:

Let D be a 4 X 4 matrix defined by

$$D = \begin{pmatrix} 1 & -\frac{1}{2} & -\frac{1}{2} & \frac{1}{4} \\ 0 & \frac{1}{2} & 0 & -\frac{1}{4} \\ 0 & 0 & \frac{1}{2} & -\frac{1}{4} \\ 0 & 0 & 0 & \frac{1}{4} \end{pmatrix}.$$

Then

$$\left.\begin{aligned}
\underline{a}_1 &:= \begin{pmatrix} \alpha_{0,0} \\ \alpha_{2,0} \\ \alpha_{0,2} \\ \alpha_{2,2} \end{pmatrix} = D \begin{pmatrix} \rho_{1,1} \\ \rho_{2,2} \\ \rho_{3,3} \\ \rho_{4,4} \end{pmatrix}; \\
\underline{a}_2 &:= \begin{pmatrix} \alpha_{1,0} \\ \alpha_{3,0} \\ \alpha_{1,2} \\ \alpha_{3,2} \end{pmatrix} = D \begin{pmatrix} 1 & 0 & 0 & 0 \\ -1 & 1 & 0 & 0 \\ 0 & 0 & 1 & 0 \\ 0 & 0 & -1 & 1 \end{pmatrix} \begin{pmatrix} \rho_{2,1} \\ \rho_{1,2} \\ \rho_{4,3} \\ \rho_{3,4} \end{pmatrix}; \\
\underline{a}_3 &:= \begin{pmatrix} \alpha_{0,1} \\ \alpha_{2,1} \\ \alpha_{0,3} \\ \alpha_{2,3} \end{pmatrix} = D \begin{pmatrix} 1 & 0 & 0 & 0 \\ 0 & 1 & 0 & 0 \\ -1 & 0 & 1 & 0 \\ 0 & -1 & 0 & 1 \end{pmatrix} \begin{pmatrix} \rho_{3,1} \\ \rho_{4,2} \\ \rho_{1,3} \\ \rho_{2,4} \end{pmatrix}; \\
\underline{a}_4 &:= \begin{pmatrix} \alpha_{1,1} \\ \alpha_{3,1} \\ \alpha_{1,3} \\ \alpha_{3,3} \end{pmatrix} = D \begin{pmatrix} 1 & 0 & 0 & 0 \\ -1 & 1 & 0 & 0 \\ -1 & 0 & 1 & 0 \\ 1 & -1 & -1 & 1 \end{pmatrix} \begin{pmatrix} \rho_{4,1} \\ \rho_{3,2} \\ \rho_{2,3} \\ \rho_{1,4} \end{pmatrix}.
\end{aligned}\right\} \qquad (C.8)$$

We may now evaluate the derivatives of the α^{ij}_{rt} with respect to values of u, $\frac{\partial u}{\partial s}$, $\frac{\partial u}{\partial y}$, and $\frac{\partial^2 u}{\partial s\,\partial y}$ at the corners of R_{ij}. Let A^{ij} be the matrix ($\underline{a}_1^{ij}$, $\underline{a}_2^{ij}$, $\underline{a}_3^{ij}$, $\underline{a}_4^{ij}$), where these columns are defined in Eqs. (C.8). For r = 0,1; t = 0,1,

$$\left.\frac{\partial}{\partial u_{ij}}[A^{i+r,j+t}] = D \begin{pmatrix} 1 & (-1)^r & (-1)^t & (-1)^r(-1)^t \\ 0 & -(-1)^r & 0 & -(-1)^r(-1)^t \\ 0 & 0 & -(-1)^t & -(-1)^r(-1)^t \\ 0 & 0 & 0 & (-1)^r(-1)^t \end{pmatrix}; \right\} \qquad \begin{matrix}(C.9)\\ \text{(Contd.)}\end{matrix}$$

$$\left.\begin{aligned}
\frac{\partial}{\partial\left(\frac{\partial u}{\partial s}\right)_{i,j}}[A^{i+r,j+t}] &= D\begin{pmatrix} 0 & 0 & 0 & 0 \\ (-1)^r & 1 & (-1)^r(-1)^t & (-1)^t \\ 0 & 0 & 0 & 0 \\ 0 & 0 & -(-1)^r(-1)^t & (-1)^t \end{pmatrix}; \\
\frac{\partial}{\partial\left(\frac{\partial u}{\partial y}\right)_{i,j}}[A^{i+r,j+t}] &= D\begin{pmatrix} 0 & 0 & 0 & 0 \\ 0 & 0 & 0 & 0 \\ (-1)^t & (-1)^r(-1)^t & 1 & (-1)^r \\ 0 & -(-1)^r(-1)^t & 0 & (-1)^r \end{pmatrix}; \\
\frac{\partial}{\partial\left(\frac{\partial^2 u}{\partial s\,\partial y}\right)_{i,j}}[A^{i+r,j+t}] &= D\begin{pmatrix} 0 & 0 & 0 & 0 \\ 0 & 0 & 0 & 0 \\ 0 & 0 & 0 & 0 \\ (-1)^r(-1)^t & (-1)^t & (-1)^r & 1 \end{pmatrix}.
\end{aligned}\right\} \quad \text{(Contd.)} \quad (C.9)$$

The subscripts i,j on u and its derivatives denote the value at (S_i, Y_j).

Now consider the quadratic expression

$$F = \underline{U}'A(s,y)\underline{U} + \underline{b}'(s,y)\underline{U} + c(s,y), \tag{C.10}$$

where

$$\underline{U}' = \left(U, \frac{\partial U}{\partial s}, \frac{\partial U}{\partial y}, \frac{\partial^2 U}{\partial s^2}, \frac{\partial^2 U}{\partial s\,\partial y}, \frac{\partial^2 U}{\partial y^2}\right),$$

$\underline{b}$ is a vector of six elements, and A is a symmetric, positive definite 6×6 matrix. Let I be defined as follows:

$$I = \int_R F\,dsdy = \int (\underline{U}'A\underline{U} + \underline{b}'\underline{U} + c)\,dsdy. \tag{C.11}$$

The energy integral for a shell covering R has this form. The discussion will be restricted to matrices A and vectors $\underline{b}$ which have polynomial elements. This is not a strong restriction since approximations of this form can be found in each element R_{ij}. If $\underline{U}$ is approximated by $\underline{u}$, by use of the approximation in Eq. (C.1), then the integral I may be approximated by

$$\hat{I} = \sum_{i=1}^{N}\sum_{j=1}^{M}\int_{R_{ij}} (\underline{u}'A\underline{u} + \underline{b}'\underline{u} + c)\,dsdy, \tag{C.12}$$

where

$$\underline{u}' = \left(u, \frac{\partial u}{\partial s}, \frac{\partial u}{\partial y}, \frac{\partial^2 u}{\partial s^2}, \frac{\partial^2 u}{\partial s \partial y}, \frac{\partial^2 u}{\partial y^2}\right), \tag{C.13}$$

these elements being functions of s and y obtained from Eq. (C.1), by differentiation when necessary. Thus we may write

$$\underline{u} = P(s,y)\underline{a}^{ij}, \tag{C.14}$$

where P(s,y) is a 6 X 16 matrix of polynomial elements, and $\underline{a}^{ij}$ is a column vector of 16 elements obtained by concatenating $\underline{a}_1$, a_2, $\underline{a}_3$, and $\underline{a}_4$.

We now define $\hat{\underline{\lambda}}'_{ij}$, a four-element vector, as

$$\hat{\underline{\lambda}}'_{ij} = \left[u_{ij}, \left(\frac{\partial u}{\partial s}\right)_{ij}, \left(\frac{\partial u}{\partial y}\right)_{ij}, \left(\frac{\partial^2 u}{\partial s \partial y}\right)_{ij}\right] \tag{C.15}$$

and $\underline{\lambda}'_{ij}$, a sixteen-element vector, as

$$\underline{\lambda}'_{ij} = (\hat{\underline{\lambda}}'_{ij}, \hat{\underline{\lambda}}'_{i-1,j}, \hat{\underline{\lambda}}'_{i,j-1}, \hat{\lambda}'_{i-1,j-i}). \tag{C.16}$$

Hence, from Eqs. (C.4) to (C.8),

$$\underline{a}^{ij} = B^{ij}\underline{\lambda}_{ij} = \hat{D}M^{ij}\underline{\lambda}_{ij}, \tag{C.17}$$

where all matrices are 16 X 16 and where $\hat{D}$ has zero elements except for its diagonal 4 X 4 matrices (the coefficients of the ρ-columns in Eqs. (C.8)); M^{ij} is a matrix which generates the ρ_{pq} from corner values. From Eqs. (C.12) through (C.17),

$$\hat{I} = \sum_{i=1}^{N} \sum_{j=1}^{M} \int_{R_{ij}} \left\{ \left[P(s,y)B^{ij}\underline{\lambda}_{ij} \right]' AP(s,y)B^{ij}\underline{\lambda}_{ij} + \underline{b}'P(s,y)B^{ij}\underline{\lambda}_{ij} + c \right\} dsdy \tag{C.18}$$

or

$$\hat{I} = \sum_{i=1}^{N} \sum_{j=1}^{M} \left\{ \underline{\lambda}'_{ij}B^{ij'} \left[\int_{R_{ij}} P'(s,y)A(s,y)P(s,y)\, dsdy \right] B^{ij}\underline{\lambda}_{ij} \right.$$

$$\left. + \left[\int_{R_{ij}} \underline{b}'(s,y)P(s,y)\, dsdy \right] B^{ij}\underline{\lambda}_{ij} + \int_{R_{ij}} c\, dsdy \right\} \tag{C.19}$$

Since A is positive definite, the first term of the integrand in Eq. (C.12) is positive and zero only if $\underline{u} = 0$. It follows that the integrand of this term

has the same property, so that in Eq. (C.19) the matrix

$$\mathcal{C}^{ij} := B^{ij'}\left[\int_{R_{ij}} P'(s,y)A(s,y)P(s,y)\,dsdy\right] B^{ij} \tag{C.20}$$

is positive definite.

We now consider the derivatives of $\hat{I}$ with respect to the components of $\hat{\underline{\lambda}}_{ij}$. Let $\mathcal{C}^{ij}$ be partitioned into 4×4 matrices (C^{ij}_{rt}). Since $\mathcal{C}^{ij}$ is symmetric, $C^{ij}_{rt} = C^{ij'}_{tr}$. Since $\mathcal{C}^{ij}$ is positive definite, a diagonal element of $\mathcal{C}^{ij}$ is greater than the sum of the absolute values of the off-diagonal elements of the corresponding row or column. This theorem, due to Gershgorin, is discussed by Varga.[13]

When Eq. (C.19) is differentiated with respect $\hat{\underline{\lambda}}_{ij}$ and the derivatives equated to zero, the condition for a minimum of $\hat{I}$, the following matrix equation emerges:

$$\begin{aligned}
&C^{ij}_{14}\hat{\underline{\lambda}}_{i-1,j-1} + (C^{ij}_{13} + C^{i+1,j}_{24})\,\hat{\underline{\lambda}}_{i,j-1} + C^{i+1,j}_{23}\hat{\underline{\lambda}}_{i+1,j-1} + (C^{ij}_{12} + C^{i,j+1}_{34})\,\hat{\underline{\lambda}}_{i-1,j} \\
&\quad + (C^{ij}_{11} + C^{i+1,j}_{22} + C^{i,j+1}_{33} + C^{i+1,j+1}_{44})\,\hat{\underline{\lambda}}_{ij} + (C^{i+1,j}_{12} + C^{i+1,j+1}_{34})\,\hat{\underline{\lambda}}_{i+1,j} \\
&\quad + C^{i,j+1}_{23}\hat{\underline{\lambda}}_{i-1,j+1} + (C^{i,j+1}_{13} + C^{i+1,j+1}_{24})\,\hat{\underline{\lambda}}_{i,j+1} + C^{i+1,j+1}_{14}\hat{\underline{\lambda}}_{i+1,j+1} \\
&\quad = -\tfrac{1}{2}\left[\int_{R_{ij}} \underline{b}'(s,y)P(s,y)\,dsdy\right] B^{ij}.
\end{aligned} \tag{C.21}$$

Equations of this type are available for each point of the grid of lines $s = S_i$, $y = Y_j$, so that Eq. (C.21) represents four equations of a system of $4(M+1)(N+1)$ equations. Cursory examination indicates that for a row-by-row ordering of the mesh points, the matrix of the system is symmetric.

Now consider the first linear equation represented by Eq. (C.21). The relevant coefficients lie in the first rows of the 4×4 matrices C^{pq}_{rt}. The diagonal element is obtained by taking the sum of the first elements of the matrices $C^{ij}_{11} + C^{i+1,j}_{22}$, $C^{i,j+1}_{33}$, and $C^{i+1,j+1}_{44}$. But Gershgorin's theorem applied to $\mathcal{C}^{ij}$, $\mathcal{C}^{i+1,j}$, $\mathcal{C}^{i,j+1}$, and $\mathcal{C}^{i+1,j+1}$ shows that these elements are greater than the sum of the absolute values of a unique set of four of the other coefficients appearing. Similar remarks apply to the other three equations in Eq. (C.21). Gershgorin's theorem, applied to the matrix of the $4(M+1)(N+1)$ equations, thus indicates that this matrix has no eigenvalues on, or to the left of, the imaginary axis. Since the matrix is real and symmetric, it is positive definite.

REFERENCES

1. A. H. Marchertas, *Strength-Deformation Considerations of an Involute Shell*, ANL-7493 (April 1969).
2. G. Kirchhoff, *Über das Gleichgewicht und die Bewegung einer elastischen Scheibe*, J. f. Math. (Grelle), Bd 40 (1850).
3. W. T. Koiter, "A Consistent First Approximation in the General Theory of Thin Elastic Shells," *Proceedings of the Symposium on the Theory of Thin Elastic Shells* (I.U.T.A.M.) Delft (1959), (Ed) W. T. Koiter.
4. V. V. Novozhilov, *Thin Shell Theory*, Noordhoff, Groningen (1964).
5. S. P. Timoshenko and S. Woinowsky-Krieger, *Theory of Plates and Shells*, McGraw-Hill Book Co., Inc., New York (1959).
6. H. L. Langhaar, R. E. Miller, and A. P. Boresi, *Deflections of Non-homogeneous Anisotropic Elastic Plates Subjected to Heating*, Theoretical and Applied Mechanics Report No. 136, University of Illinois (1958), AD-202755.
7. L. Fox and R. V. Southwell, *Biharmonic Analysis as Applied to the Flexure and Extension of Flat Elastic Plates*, Phil. Trans. Roy. Soc. London, *239*, 419-460 (1946).
8. D. S. Griffin and R. S. Varga, *Numerical Solution of Plane Elasticity Problems*, J. Soc. Indust. Appl. Math., Vol. 11, 1046-1062 (1963).
9. R. Courant and D. Hilbert, *Methoden der Mathematischen Physik*, Springer-Verlag Aerodynamic Press, Berlin (1937).
10. A. L. Goldenveiser, *Theory of Thin Elastic Shells*, Pergamon, Oxford (1961).
11. H. Schaeffer, *Computer Program for Finite Difference Solutions of Shells of Revolution under Asymmetric Loads*, NASA TND-3926 (1967).
12. G. Birkhoff and C. DeBoor, "Piecewise Polynomial Interpolation and Approximation," in *Approximation of Functions*, Elsevier, Amsterdam (1965) pp. 164-190.
13. R. S. Varga, *Matrix Iterative Analysis*, Prentice Hall, Inc., Englewood Cliffs, N. J. (1962).
14. C. T. Wang, *Applied Elasticity*, McGraw-Hill Book Co., Inc., New York (1953).
15. I. M. Gelfand and S. V. Fomin, *The Calculus of Variations*, Prentice Hall, Inc., Englewood Cliffs, N. J. (1963).

ARGONNE NATIONAL LAB WEST
3 4444 00007948 3

B