ANL-7714
RETURN TO ANL (IDAHO) LIBRARY.

714

ANL-7714

e ARC System Cross-section Homogenization d Modification Capabilities

A. Kovalsky, J. Zapatka,
Henryson II, J. Hoover,
and P. M. Walker

U of C-AUA-USAEC

ARGONNE NATIONAL LABORATORY, ARGONNE, ILLINOIS

The facilities of Argonne National Laboratory are owned by the United States Government. Under the terms of a contract (W-31-109-Eng-38) between the U. S. Atomic Energy Commission, Argonne Universities Association and The University of Chicago, the University employs the staff and operates the Laboratory in accordance with policies and programs formulated, approved and reviewed by the Association.

MEMBERS OF ARGONNE UNIVERSITIES ASSOCIATION

The University of Arizona
Carnegie-Mellon University
Case Western Reserve University
The University of Chicago
University of Cincinnati
Illinois Institute of Technology
University of Illinois
Indiana University
Iowa State University
The University of Iowa
Kansas State University
The University of Kansas
Loyola University
Marquette University
Michigan State University
The University of Michigan
University of Minnesota
University of Missouri
Northwestern University
University of Notre Dame
The Ohio State University
Ohio University
The Pennsylvania State University
Purdue University
Saint Louis University
Southern Illinois University
The University of Texas at Austin
Washington University
Wayne State University
The University of Wisconsin

NOTICE

This report was prepared as an account of work sponsored by the United States Government. Neither the United States nor the United States Atomic Energy Commission, nor any of their employees, nor any of their contractors, subcontractors, or their employees, makes any warranty, express or implied, or assumes any legal liability or responsibility for the accuracy, completeness or usefulness of any information, apparatus, product or process disclosed, or represents that its use would not infringe privately-owned rights.

Printed in the United States of America
Available from
National Technical Information Service
U.S. Department of Commerce
5285 Port Royal Road
Springfield, Virginia 22151
Price: Printed Copy $6.00; Microfiche $0.95

ANL-7714
Reactor Technology

ARGONNE NATIONAL LABORATORY
9700 South Cass Avenue
Argonne, Illinois 60439

The ARC System Cross-section Homogenization and Modification Capabilities

by

E. A. Kovalsky and J. Zapatka*
Applied Mathematics Division

H. Henryson II and J. Hoover**
Applied Physics Division

P. M. Walker†
Applied Mathematics Division

June 1971

* Now at Bank Computer Network Corporation, Chicago, Illinois
** Now with the Argonne Center for Environmental Studies
† Now with the EBR-II Project, ANL

PREFACE

This volume is one of a series describing the Argonne Reactor Computation (ARC) System, which has been executed on IBM System 360 computers, models 50, 75, 85, and 195, under the OS/360 operating system. The modules described herein must be used in conjunction with modules described in other volumes.

The ARC System consists of a library of computational modules for fast reactor design calculations, along with a set of system modules which provide an environment for the operation of the computational modules. The modules are used in a selected order by directive programs called "paths." Inter-module communication is through ARC System data sets. The data sets are defined such that output from one computational module can be used as input to others. This allows for the automation into a single run of what would normally be a sequence of runs.

ANL-7711 of this series contains descriptions of the ARC System history and philosophy, of the software environment in which the ARC System operates, of the system modules which comprise the software environment, and of the ARC System data sets.

A description of the ARC System standard paths can be found in ANL-7712.

The ARC System was previously described in report ANL-7332, "The Argonne Reactor Computation (ARC) System," B. J. Toppel, Ed. (November 1967).

CONTENTS OF VOLUMES IN THIS SERIES

ANL-7711 The System Aspects and Interface Data Sets of The Argonne Reactor Computation (ARC) System

ANL-7712 The ARC System Standard Paths

ANL-7713 The ARC System Neutronics Input Processor

Part One. Neutronics Input Processor Module, GNIP (NUI002)

Part Two. Geometry Data Set (GEOM) Copier, CPGEOM (AJC006)

ANL-7714 The ARC System Cross-section Homogenization and Modification Capabilities

Part One. Multigroup Cross-section Homogenization Specification Module, INHOMG (NUI001)

Part Two. Multigroup Cross-section Homogenization Calculation Module, HOMOG (NUC001)

Part Three. Material-to-Composition Cross-section Homogenization Calculation Module, HHOMOG (NUC007)

Part Four. Microscopic Cross-section Group Collapse Module, MICCOL (AJC007)

Part Five. Macroscopic Cross-section Group Collapse Module, MACCOL (AJC008)

Part Six. Run-time Microscopic Cross-section Modification Module, MODXSISO (NUI006)

ANL-7715 The ARC System One-dimensional Diffusion Theory Capability, DARC1D

Part One. One-dimensional, Multigroup Diffusion Theory Module for k-effective and Source Calculations, DIF1D (NUC002)

Part Two. One-dimensional, Multigroup Diffusion Theory Criticality Search Module, D1DSCH (NUC004)

ANL-7716 The ARC System Two-dimensional Diffusion Theory Capability, DARC2D

Part One. Two-dimensional, Multigroup Diffusion Theory Module for k-effective and Source Calculations, DIF2D (NUC005)

Part Two. Two-dimensional, Multigroup Diffusion Theory Criticality Search Module, D2DSCH (NUC006)

ANL-7717 The ARC System One-dimensional Transport Theory Capability, SNARC1D

Part One. One-dimensional, Discrete Ordinate Transport Theory Specification Module, SNIN1D (NUI005)

Part Two. One-dimensional, Discrete Ordinate Transport Theory Calculation Module, SNARC1D (NUC003)

ANL-7718 The ARC System Two-dimensional Transport Theory Capability

Part One. Two-dimensional, Discrete Ordinate Transport Theory Calculation Module, TARGET (NUC008)

Part Two. Two-dimensional, Discrete Ordinate Transport Theory Output Manipulation Module, OUTPUTR (NUE002)

ANL-7719 The ARC System One-dimensional Adjunct Calculations and PARC1D (AJC003)

Part One. One-dimensional Diffusion Theory Perturbation Module, PARC1D (AJC003)

Part Two. One-dimensional Neutron Inventory Module, INVENT1D (AJC001)

Part Three. One-dimensional Neutronics Output Manipulation Module, OUTMAN1D (NUE001)

ANL-7720 The ARC System Two-dimensional Adjunct Calculations

Part One. Two-dimensional Diffusion Theory Perturbation Module, PARC2D (AJC004)

Part Two. Two-dimensional Neutron Inventory Module, INVENT2D (AJC002)

ANL-7721 The ARC System Fuel Cycle Analysis Capability, REBUS

Part One. Fuel Cycle Specification Module, INFUEL (FCI001)

Part Two. Fuel Cycle Analysis Module, FUELCY (FCC001)

ANL-7722 The ARC System Cross-section Generation Capabilities, ARC-MC^2

Part One. Epithermal Cross-section Specification Module, INPUT

Part Two. Resonance Cross-section Calculation Module, REXSEC (CSC001)

Part Three. Nonresonant Cross-section and Fundamental-Mode Spectrum Calculation Module, SCSFM (CSC002)

Part Four. Broad-group Cross-section and Fundamental-Mode Spectrum Calculation Module, BCSFM (CSC003)

Part Five. Cross-section Data Set Editor Module, XSEDIT (CSE001)

Part Six. Delayed Data Preparation Module, DELDATA (CSI007)

The ANL topical reports ANL-7723 and ANL-7724 referenced in ANL-7713 and ANL-7717 will not be issued as part of this series.

TABLE OF CONTENTS

	Page
ABSTRACT	17
PART ONE. MULTIGROUP CROSS-SECTION HOMOGENIZATION SPECIFICATION MODULE, INHOMG (NUI001)	19
1. INHOMG (NUI001) Introduction	20
a. Description of Capabilities	20
b. Standard Paths Which Utilize This Module, and Other Modules Utilized by Each Path	21
c. Data Sets Utilized by This Module	23
2. INHOMG (NUI001) Description of Problem and Method of Solution	24
a. Nature of Physical Problem and Method of Solution	24
b. Description of Output	24
3. INHOMG (NUI001) Description of Module Flow	26
a. Overlay Structure Diagram	27
b. Diagrammatic Subprogram Logic Flow	28
c. Descriptive Subroutine Logic Flow	29
4. INHOMG (NUI001) Subprogram Descriptions	30
Subroutine BLOCK DATA	31
Subroutine CALLT1	33
Subroutine CALLT2	36
Subroutine ERROUT	39
Subroutine INHOMG	40
Main Program MAIN	43
Subroutine RDSPEC	44
Subroutine SKPREC	45
Subroutine TYPE1	46
Subroutine TYPE2	49
Subroutine WRTT1	53
Subroutine WRTT2	55
5. INHOMG (NUI001) Common Block Descriptions	57
/ALFNUM/	58
/ARRAY/	58
/ARRAYS/	58
/ARRAY2/	59
/COMP/	59
/DSNAMS/	60
/DSNUMS/	60
/ISO/	60
/LLOC/	60
/MAT/	61
/MSIZE/	61
/NT/	61

TABLE OF CONTENTS (Contd.)

		Page
6.	INHOMG (NUI001) Dynamic Storage Array Allocation	62
7.	INHOMG (NUI001) Data Set Usage	65
8.	INHOMG (NUI001) Error Messages	68
9.	INHOMG (NUI001) Timing Information	70
10.	INHOMG (NUI001) Sample Output	71
PART TWO.	MULTIGROUP CROSS-SECTION HOMOGENIZATION CALCULATION MODULE, HOMOG (NUC001)	75
1.	HOMOG (NUC001) Introduction	76
	a. Description of Capabilities	76
	b. Standard Paths Which Utilize This Module, and Other Modules Utilized by Each Path	77
	c. Data Sets Utilized by This Module	79
2.	HOMOG (NUC001) Description of Problem and Method of Solution	80
	a. Introduction	80
	b. Material Cross Sections	80
	c. Material Fission-spectrum Fractions	82
	d. Material Delayed-neutron Data	83
	e. Composition Cross Sections	83
	f. Composition Fission-spectrum Fractions	84
	g. Composition Delayed-neutron Data	84
	h. Description of Output	85
3.	HOMOG (NUC001) Description of Module Flow	86
	a. Overlay Structure Diagram	90
	b. Diagrammatic Subprogram Logic Flow	91
	c. Descriptive Subroutine Logic Flow	92
4.	HOMOG (NUC001) Subprogram Descriptions	96
	Subroutine BHOMOG	97
	Subroutine BLOCK DATA	98
	Subroutine CHKCHI	100
	Subroutine ERROUT	101
	Subroutine FRMCHI	102
	Subroutine FRMMAT	104
	Subroutine FRMMTS	111
	Subroutine FRMSCT	118
	Subroutine HOMOG	121
	Main Program MAIN	132
	Subroutine MIXANI	132

TABLE OF CONTENTS (Contd.)

		Page
	Subroutine MIXAUX	137
	Subroutine MIXMIN	143
	Subroutine MIXMT1	149
	Subroutine MIXMT2	153
	Subroutine PRNTA8	160
	Subroutine RDANI	161
	Subroutine RDCHI	164
	Subroutine RDISO	166
	Subroutine RDSCT	172
	Subroutine RDSCT1	173
	Subroutine RDMIN	176
	Subroutine RDSPEC	180
	Subroutine RWAUX	182
	Subroutine RWISO	186
	Subroutine RWISOS	189
	Subroutine RWIXS	196
	Subroutine RWSBLK	199
	Subroutine RWSCT	202
	Subroutine RWUPDN	204
	Subroutine SKPREC	205
	Subroutine WCHI	206
	Subroutine XSCANI	207
	Subroutine XSCAUX	209
	Subroutine XSCMIN	211
	Subroutine XSISO	213
	Subroutine XSMANI	215
	Subroutine XSMAUX	217
	Subroutine XSMMIN	219
	Subroutine VTOMIX	221
	Subroutine WRTMIN	222
5.	HOMOG (NUC001) Common Block Descriptions	225
	/ALFNM1/	226
	/ARRAY/	226
	/ARRAY1/	227
	/ARRAY3/	229
	/COMP1/	229
	/DELAY1/	230
	/DSNAM1/	231
	/DSNUM1/	231
	/FLAGS/	232
	/HMGTIM/	234
	/ISO1/	235
	/MAT1/	236
	/MAT2/	237
	/MISC/	238
	/MISC2/	239
	/MSIZE/	239
	/QREC/	239

TABLE OF CONTENTS (Contd.)

Page

6. HOMOG (NUC001) Dynamic Storage Array Allocation 240

7. HOMOG (NUC001) Data Set Usage 251

8. HOMOG (NUC001) Error Messages 263

9. HOMOG (NUC001) Timing Information 273

10. HOMOG (NUC001) Sample Output. 274

PART THREE. MATERIAL-TO-COMPOSITION CROSS-SECTION HOMOGENIZATION CALCULATION MODULE, HHOMOG (NUC007) 287

1. HHOMOG (NUC007) Introduction. 288
   a. Description of Capabilities 288
   b. Standard Paths Which Utilize This Module, and Other Modules Utilized by Each Path 289
   c. Data Sets Utilized by This Module 291

2. HHOMOG (NUC007) Description of Problem and Method of Solution . . 292
   a. Introduction. 292
   b. Linear Flux Weighting Equations 292

3. HHOMOG (NUC007) Description of Module Flow. 294
   a. Overlay Structure Diagram 295
   b. Diagrammatic Subprogram Logic Flow. 296
   c. Descriptive Subprogram Logic Flow 297

4. HHOMOG (NUC007) Subprogram Descriptions 298
   Subroutine HOMOG. 299
   Main Program MAIN 301
   Subroutine M2 302
   Subroutine M3 303
   Subroutine M4 304

5. HHOMOG (NUC007) Common Block Descriptions 308
   /A/ 309
   /PAR/ 309

6. HHOMOG (NUC007) Dynamic Storage Allocation. 310

7. HHOMOG (NUC007) Data Set Usage. 315

8. HHOMOG (NUC007) Error Messages. 317

9. HHOMOG (NUC007) Timing Information. 318

10. HHOMOG (NUC007) Sample Output 319

TABLE OF CONTENTS (Contd.)

Page

PART FOUR. MICROSCOPIC CROSS-SECTION GROUP COLLAPSE MODULE, MICCOL (AJC007) 321

1. MICCOL (AJC007) Introduction. 322
   a. Description of Capabilities 322
   b. Standard Paths Which Utilize This Module, and Other Modules Utilized by Each Path 323
   c. Data Sets Utilized by This Module 325

2. MICCOL (AJC007) Description of Problem and Method of Solution . . 326
   a. Introduction. 326
   b. Method of Solution. 326

3. MICCOL (AJC007) Description of Module Flow. 327
   a. Overlay Structure Diagram 328
   b. Diagrammatic Subprogram Logic Flow. 329
   c. Descriptive Subprogram Logic Flow 330

4. MICCOL (AJC007) Subprogram Descriptions 331
   Subroutine CCS. 332
   Subroutine CCHI 334
   Subroutine CPCS 336
   Subroutine FRPNC. 340
   Main Program MAIN 341
   Subroutine M1 341
   Subroutine M2 342
   Subroutine M3 344
   Subroutine M4 346
   Subroutine MICCOL 347
   Subroutine PCCHI. 351

5. MICCOL (AJC007) Common Block Descriptions 354
   /BLFC/. 355
   /CCF/ 355
   /CLC/ 355
   /IG/. 356
   /TLC/ 356

6. MICCOL (AJC007) Dynamic Storage Allocation. 357

7. MICCOL (AJC007) Data Set Usage. 362

8. MICCOL (AJC007) Error Messages. 364

9. MICCOL (AJC007) Timing Information. 365

10. MICCOL (AJC007) Sample Output 366

TABLE OF CONTENTS (Contd.)

		Page
PART FIVE.	MACROSCOPIC CROSS-SECTION COLLAPSE MODULE, MACCOL (AJC008)	367
1.	MACCOL (AJC008) Introduction	368
	a. Description of Capabilities	368
	b. Standard Paths Which Utilize This Module, and Other Modules Utilized by Each Path	369
	c. Data Sets Utilized by This Module	371
2.	MACCOL (AJC008) Description of Problem and Method of Solution	372
	a. Introduction	372
	b. Method of Solution	372
3.	MACCOL (AJC008) Description of Module Flow	373
	a. Overlay Structure Diagram	374
	b. Diagrammatic Subprogram Logic Flow	375
	c. Descriptive Subprogram Logic Flow	376
4.	MACCOL (AJC008) Subprogram Descriptions	377
	Subroutine CCHI	378
	Subroutine CCS	379
	Subroutine COLLA	383
	Subroutine DCHI	385
	Subroutine FRPNC	386
	Main Program MAIN	388
	Subroutine MACCOL	388
	Subroutine M1	390
	Subroutine M2	392
	Subroutine M3	393
	Subroutine M4	396
	Subroutine M5	397
	Subroutine M6	399
	Subroutine M7	400
	Subroutine M8	402
	Subroutine PCCHI	403
5.	MACCOL (AJC008) Common Block Descriptions	406
	/A/	407
	/CLC/	407
	/FLC/	407
	/IG/	408
	/LT/	408
	/PAR/	409
	/TAP/	410
	/TAPEN/	410

TABLE OF CONTENTS (Contd.)

Page

6. MACCOL (AJC008) Dynamic Storage Allocation. 411

7. MACCOL (AJC008) Data Set Usage. 418

8. MACCOL (AJC008) Error Messages. 422

9. MACCOL (AJC008) Timing Information. 423

10. MACCOL (AJC008) Sample Output 424

PART SIX. RUN-TIME MICROSCOPIC CROSS-SECTION MODIFICATION MODULE, MODXSISO (NUI006) 425

1. MODXSISO (NUI006) Introduction. 426
   a. Description of Capabilities 426
   b. Standard Paths Which Utilize This Module, and Other Modules Utilized by Each Path 427
   c. Data Sets Utilized by This Module 429

2. MODXSISO (NUI006) Description of Problem and Method of Solution . 430
   a. Introduction. 430
   b. Cross-section Modification. 430
   c. Fission-spectrum Modification 431
   d. Module Limitations. 431
   e. Output Edits. 432

3. MODXSISO (NUI006) Description of Module Flow. 433
   a. Overlay Structure Diagram 434
   b. Diagrammatic Subprogram Logic Flow. 434
   c. Descriptive Subprogram Logic Flow 434

4. MODXSISO (NUI006) Subprogram Descriptions 436
   Main Program MAIN 437
   Subroutine DOWORK 440

5. MODXSISO (NUI006) Common Block Descriptions 448
   /CODEP/ 449
   /DSRNO/ 449

6. MODXSISO (NUI006) Dynamic Storage Array Allocation. 450

7. MODXSISO (NUI006) Data Set Usage. 453

8. MODXSISO (NUI006) Error Messages. 455

9. MODXSISO (NUI006) Timing Information. 456

10. MODXSISO (NUI006) Sample Output 457

The ARC System Cross-section Homogenization and Modification Capabilities

by

E. A. Kovalsky, J. Zapatka, H. Henryson II,
J. Hoover, and P. M. Walker

ABSTRACT

This document presents the documentation of the ARC System modules INHOMG (NUI001), HOMOG (NUC001), HHOMOG (NUC007), MICCOL (AJC007), MACCOL (AJC008), and MODXSISO (NUI006).

NUI001 reads and processes BCD card images which define isotope to material and material to composition assignments for the various reactor regions.

NUC001 generates the material and composition level macroscopic cross sections using the mixture information processed by NUI001 and a specified microscopic cross-section data set, XS.ISO or XS.ISO2.

NUC007 is a restricted version of NUC001 in that it generates only composition level cross sections based on a homogenization of existing material level cross sections.

AJC007 performs a group collapse for microscopic cross sections using a specified multigroup spectrum.

AJC008 performs a group collapse for macroscopic cross sections using a specified multigroup spectrum.

NUI006 processes the type 20 cards in the BCD data set A.NIP to provide run-time modification of an XS.ISO2 microscopic cross-section data set.

PART ONE.
MULTIGROUP CROSS-SECTION HOMOGENIZATION SPECIFICATION MODULE, INHOMG (NUI001)

Designed By - J. V. Zapatka*
Programmed By - J. V. Zapatka*
Documented By - E. A. Kovalsky

---

*Now at Bank Computer Network Corporation, Chicago, Illinois.

1. INHOMG (NUI001) Introduction

a. Description of Capabilities

The module NUI001 reads and analyzes BCD card images and/or a binary data set which defines reactor materials from isotopes or reactor compositions from materials or both.

It writes out these specifications on a binary data set for use by other ARC System modules.

Missing data is noted with a brief message and execution is terminated.

b. Standard Paths Which Utilize This Module, and Other Modules Utilized by Each Path

Paths Utilizing This Module \ Modules Utilized By Each Path	DELDATA (CSI007) Delayed Neutron Data Preparation	INHOMG(NUI001) Multigroup Cross Section Homog. Specifications	HOMOG (NUC001) Multigroup Cross Section Homog.	HHOMOG (NUC007) Material-to-Composition Cross Section Homog.	GNIP (NUI002) Neutronics Input Processor	DIF1D (NUC002) 1-D Diffusion Theory k_{eff} and Source Calculations	DIDSCH (NUC004) 1-D Diffusion Theory Criticality Search	DIF2D (NUC005) 2-D Diffusion Theory k_{eff} and Source Calculations	D2DSCH (NUC006) 2-D Diffusion Theory Criticality Search	MODXSISO (NUI006) Run-Time Microscopic Cross Section Modification	PARC1D (AJC003) 1-D Diffusion Theory Perturbation
						DARC1D		DARC2D			
STP001 1-D diffusion theory		X	X		X	X				X	
STP002 1-D transport theory		X	X		X					X	
STP003 2-D diffusion theory		X	X		X	X	X	X	X	X	
STP004 burnup diffusion theory		X	X		X	X	X	X	X		
STP006 1-D diffusion perturbation	X	X	X		X	X	X			X	X
STP007 2-D diffusion perturbation	X	X	X		X			X	X	X	
STP008 spatial flux synthesis		X	X		X						
STP011 2-D transport theory		X	X		X						

b. Standard Paths Which Utilize This Module, and Other Modules Utilized by Each Path (Contd.)

Paths Utilizing This Module \ Modules Utilized By Each Path	PARC2D (AJC004) 2-D Diffusion Theory Perturbation	SYN2D (AJC005) Spatial Flux Synthesis	SNIN1D (NUI005) 1-D Discrete Ordinate Transport Theory Specifications (SNARC1D)	SNARC1D (NUC003) 1-D Discrete Ordinate Transport Theory Calculations (SNARC1D)	TARGET (NUC008) 2-D Discrete Ordinate Transport Theory Calculations	OUTPUTR (NUF002) 2-D Discrete Ordinate Transport Theory Output	OUTMAN1D (NUE001) 1-D Neutronics Output Manipulation	INVENT1D (AJC001) 1-D Neutron Inventory	INVENT2D (AJC002) 2-D Neutron Inventory	CPGEOM (AJC006) Geometry Data Set (GEOM) Copier	INFUEL (FCI001) Fuel Cycle Specifications (REBUS)	FUELCY (FCC001) Fuel Cycle Analysis (REBUS)
STP001 1-D diffusion theory							X	X				
STP002 1-D transport theory			X	X			X	X				
STP003 2-D diffusion theory							X	X	X			
STP004 burnup diffusion theory											X	X
STP006 1-D diffusion perturbation							X	X		X		
STP007 2-D diffusion perturbation	X								X	X		
STP008 spatial flux synthesis		X										
STP011 2-D transport theory					X	X			X			

c. Data Sets Utilized by This Module

Upper-interface Data Sets	Records Read
A.NIP, General Input for Neutronics Calculations	Specifications Material Specifications (type Composition Specifications (t
B.HOMOG, Binary Version of Homogenization Input	All

Lower-Interface Data Sets	Records Written
B.HOMOG, Binary Version of Homogenization Input	All

2. INHOMG (NUI001) Description of Problem and Method of Solution

a. Nature of Physical Problem Solved and Method of Solution

The homogenization calculation module NUC001, requires as input, a binary data set B.HOMOG, which is defined and written by module NUI001.

The input to module NUI001 is information that defines "materials" as a combination of one or more isotopes and/or compositions as a combination of one or more "materials" ("isotopes").

The input may be accepted in the form of a BCD data set containing card images and/or a binary data set.

If the input consists of only of the BCD data set A.NIP, the card types 13 and 14 images are processed and the processed information is stored in the binary data set B.HOMOG. When type 13 cards are not supplied a default is provided by converting type 14 card data to usable form.

If the input consists only of the binary data set B.HOMOG, no processing is done.

If the input consists of the BCD data set A.NIP and binary data set B.HOMOG, then the BCD card images that are designated as new information are processed and the processed information is stored in the binary data set. Any old information of this kind that may already exist on the binary data set will be replaced by the new information.

Any errors will be flagged, and execution will be terminated.

b. Description of Output

The data written on binary data set B.HOMOG is also printed as output. However, these are not in the record form of the data set but as separate lists, untitled at present.

These include:

Material Mixture Control Data:

MSLTH,NMAT,NISO2

Material Mixture Data; separated as

DIMIX - isotope mix table

ATMDEN - atom density table

MSPEC - list of number of isotopes comprising each material

DITBL - list of all isotope names in set

DMTBL - material label list

Composition Mixture Control Data:

QCSLTH,NCMP,NMAT

Composition Mixture Data; separated as

DMMIX - material mix table

VOLFRC - volume fraction table

QCSPEC - list of numbers of materials in each composition

DMTBL - list of material tables

DCTBL - list of composition tables

3. INHOMG (NUI001) Description of Module Flow

This section defines the overlay structure of this module and the flow of logic through the subprograms which form the module.

Section a. consists of an overlay structure diagram, showing the ARC System segments and INHOMG module segments required by this module and their positions in the overlay heirarchy. This is followed by a list of the subprograms located in each INHOMG module segment.

Section b. illustrates the flow of logic through the subprograms of this module, and section c. describes this flow in terms of the module's functions.

a. Overlay Structure Diagram

MAIN
LINK
IBCOM
POINTR
SYSTEM
SHIFT
SQUEZE
LOAD
INHOMG
HMGUTIL

Subprograms contained in each INHOMG (NUI001) module segment

INHOMG	HMGUTIL
BLOCK DATA	ERROUT''
CALLT1	RDSPEC
CALLT2	SKPREC
INHOMG	
MAIN	
TYPE1	
TYPE2	
WRTT1	
WRTT2	

b. Diagrammatic Subprogram Logic Flow

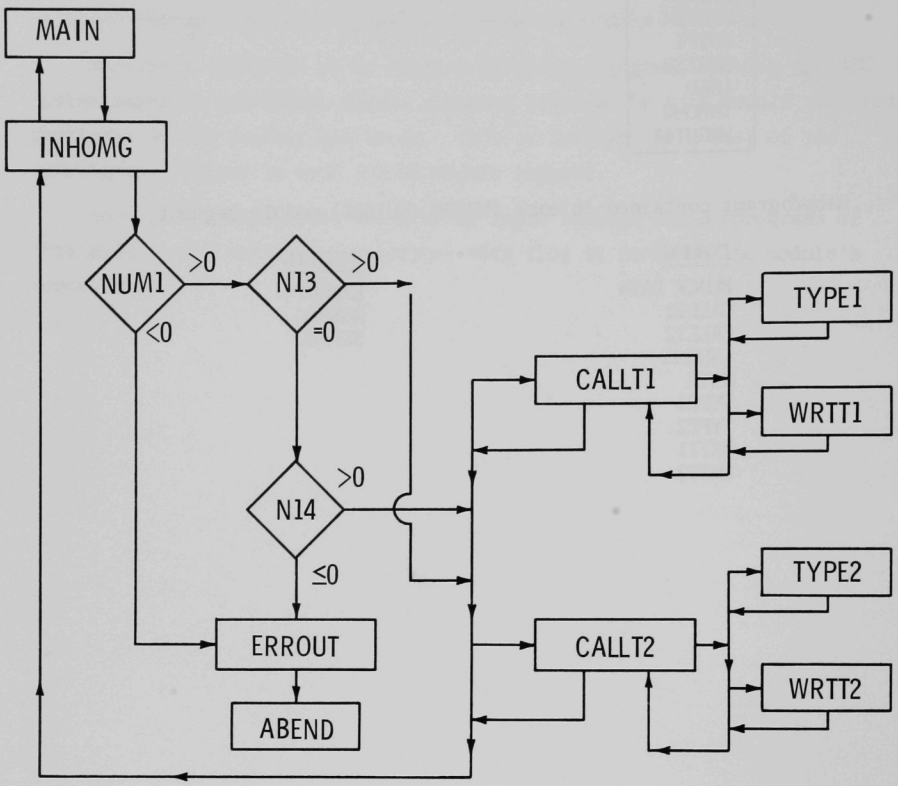

c. Descriptive Subroutine Logic Flow

Module INHOMG, NUI001 is entered by a call from a calling program. The MAIN subroutine calls subroutine INHOMG, the driver routine. INHOMG calls SNIFF to determine the existence of A.NIP and then B.HOMOG. NUM1 indicates the data set reference number (DSRN) of A.NIP. If A.NIP exists, NUM1 is greater than zero. When NUM1 is less than zero, ERROUT is called and an ABEND is caused.

NT1 and NT2 indicate the number of type 13 cards and type 14 cards respectively in A.NIP. NUM2 indicates the DSRN of data set B.HOMOG.

If type NT1 is greater than zero, CALLT1 is called by INHOMG. CALLT1 calls WRTT1 where the first two records of B.HOMOG are written.

At present a mechanism for reading an old B.HOMOG data set exists but is not used. When B.HOMOG is old, NUM2 is greater than zero. Subroutine SKPREC and RDSPEC are called by CALLT1 and the words of B.HOMOG are read. CALLT1 calls WRTT1 where the first two records are rewritten, and then calls WRTT2 where the third and fourth records are rewritten. This coding is now always bypassed by setting NUM2 equal to zero. For this reason, SKPREC and RDSPEC do not appear in the subprogram logic flow diagram.

Errout is called by INHOMG when NT2 is ≤ 0. If NT2 is greater than zero, INHOMG calls CALLT2, and CALLT2 calls TYPE2 where type 14 cards are read. If no type 13 cards were encountered, the first two records of B.HOMOG are written by TYPE2 using type 14 card input. Otherwise, TYPE2 uses type 13 card data. CALLT2 then calls WRTT2 which writes the third and fourth records of B.HOMOG. CALLT2 returns to INHOMG which returns to MAIN and the calling program.

4. INHOMG (NUI001) Subprogram Descriptions

This section contains descriptions of all subprograms which are part of the INHOMG (NUI001) module. The descriptions appear in alphabetical order by subprogram name.

Each subprogram description begins with a listing of the calling sequence of the subprogram, and of its entry points, if any. Subsection 1 is a list of the arguments of the subprogram and its entry points, in order of appearance, with the type of each argument, its dimensions in the subprogram if it is an array, and its definition or use. The two types of variables used are I*4, denoting an integer fullword (32 bits); and R*8, denoting a floating-point doubleword (64 bits). Variables used as array dimensions are defined either as arguments or as members of common blocks.

Subsection 2 contains the names of all common blocks used by the subprogram. Each is followed by a list of the variables actually used from the common block within the subprogram, together with their types and their definitions. The dimensions, if any, follow the variable name in parenthesis.

Subsection 3 contains a listing of important variables which are local to the subprogram, in a format like that of subsection 2. Subsection 4 describes the functions performed by the subprogram in terms of the overall purpose of the module.

Subsection 5 lists all subprograms called by this subprogram or any of its entry points; subsection 6 lists the subprogram which call this subprogram or any of its entry points.

Subsection 7 describes error messages which can be generated by this subprogram. These messages are all of the form ERROR NUMBER=nnnnn where nnnnn is explained in the error message list.

More detailed explanations of the contents of common blocks, and of the variable-dimensioned arrays stored in the large container array /ARRAY/, can be found in sections 5 and 6.

Subroutine BLOCK DATA

1. Arguments - None

2. Common Blocks

/ARRAYS/

Variables used from this common block

Name	Type	Definition
DDIMIX	R*8	Contains the characters 'DIMIX', the name of the isotope mix table array in B.HOMOG record type 2
DATMDE	R*8	Contains the characters 'ATMDEN', the name of the atomic density table in B.HOMOG
DMSPEC	R*8	Contains the characters 'MSPEC' the name of the isotopes comprising each material in the set
DDITBL	R*8	Contains the characters 'DITBL', the name of the array of all isotope names in B.HOMOG
DDMTBL	R*8	Contains the characters 'DMTBL', the name of the material label array in B.HOMOG
DDMMIX	R*8	Contains the characters 'DMMIX', the name of the material mix table array in B.HOMOG
DVOLFR	R*8	Contains the characters 'VOLFRC', the name of the volume fraction table in B.HOMOG
DQCSPE	R*8	Contains the characters 'QCSPEC', the name of the array of numbers of materials in each B.HOMOG composition record

/ARRAY2/

Variables used from this common block

Name	Type	Definition
DDCTBL	R*8	Contains the characters DCTBL

/DSNAMS/

Variables used from this common block

Name	Type	Definition
DNAM1	R*8	Contains the characters 'A.NIP'
DNAM2	R*8	Contains the characters 'B.HOMOG'

/ALFNUM/

Variables used from this common block

Name	Type	Definition
DBLANK	R*8	Blank characters
ONE	R*8	Contains a floating point 1.0

3. Local Variables - None

4. Functions and tasks performed by this subroutine

BLOCK DATA initializes the variables in the named COMMON to the values indicated by DATA statements.

5. Subprograms called by this subroutine - None

6. Subprograms called by this subroutine - None

7. Error Messages - None

Subroutine CALLT1

1. Arguments - None

2. Common Blocks

/NT/

Variables used from this common block

Name	Type	Definition
NT(14)	I*4	Number of cards of the first fourteen types in data set A.NIP. NT(13) has the local name NT1 NT(14) has the local name NT2

/ARRAY2/

Variables used from this common block

Name	Type	Definition
DDCTBL	R*8	Contains the characters DCTBL

/ARRAY/

Variables used from this common block

Name	Type	Definition
A( )	R*8	Container array for the variably dimensioned arrays

/MSIZE/

Variables used from this common block

Name	Type	Definition
MAXSIZ	I*4	Maximum size of the container array A

/LLOC/

Variables used from this common block

Name	Type	Definition
LSTLOC	I*4	Last used location of the container array A

/ISO/

Variables used from this common block

Name	Type	Definition
NISO2	I*4	Number of names of distinct isotopes used in defining all the materials

/ARRAYS/

Variables used from this common block

Name	Type	Definition
DDIMIX	R*8	Contains the characters 'DIMIX', the name of the isotope mix table array in B.HOMOG record type 2
DATMDE	R*8	Contains the characters 'ATMDEN', the name of the atomic density table in B.HOMOG
DMSPEC	R*8	Contains the characters 'MSPEC' the name of the isotopes comprising each material in the set
DDITBL	R*8	Contains the characters 'DITBL', the name of the array of all isotope names in B.HOMOG
DDMTBL	R*8	Contains the characters 'DMTBL', the name of the material label array in B.HOMOG
DDMMIX	R*8	Contains the characters 'DMMIX', the name of the material mix table array in B.HOMOG
DVOLFR	R*8	Contains the characters 'VOLFRC', the name of the volume fraction table in B.HOMOG
DQCSPE	R*8	Contains the characters 'QCSPEC', the name of the array of numbers of materials in each B.HOMOG composition record

/MAT/

Variables used from this common block

Name	Type	Definition
NMAT	I*4	Number of materials defined by the type 13 cards
MSLTH	I*4	Total number of names of isotopes used in defining all the materials. Each appearance of an isotope name is counted

/DSNUMS/

Variables used from this common block

Name	Type	Definition
NUM2	I*4	DSRN of data set B.HOMOG

/COMP/

Variables used from this common block

Name	Type	Definition
NCMP	I*4	Number of compositions defined by type 14 cards
QCSLTH	I*4	Total number of names of materials used in defining all the compositions

3. Local Variables

Name	Type	Definition
L1	I*4	Temporary variable used in calculating the amount of storage to reserve for each variably dimensioned array used by TYPE1
L2	I*4	Flag set by IPTERR: L2 = 0 the container array did not overflow L2 ≠ 0 the container array did overflow
NMAT2	I*4	Number of materials in old B.HOMOG data set

4. Functions and tasks performed by this subroutine

CALLT1 is the driver for processing the material specifications from type 13 cards.

It sets up arrays DIMIX, ATMDEN, MSPEC, DITBL, and DMTBL.

It calls the type 13 card processor TYPE1.

When B.HOMOG is old, SKPREC and RDSPEC are called and the data set is read.

After rewinding B.HOMOG, WRTT1 and WRTT2 are called to rewrite the data set including new data from the type 13 cards.

WIPOUT is called to release storage occupied by unneeded arrays.

5. Subprograms called by this subroutine

IGET (entry in POINTR)	ERROUT
PURGE (entry in POINTR)	PUTPNT (entry in POINTR)
REDEF (entry in POINTR)	RDSPEC
TYPE1	SKPREC
WRTT1	WIPOUT (entry in POINTR)
WRTT2	

6. Subprograms calling this subroutine

INHOMOG

7. Error messages generated by this subroutine

ERROR NUMBER = nnnnn

Where nnnnn is

Number	Reason
201	Container array A has overflowed

Subroutine CALLT2

1. Arguments - None

2. Common Blocks

/ARRAY/

Variables used from this common block

Name	Type	Definition
A(10000)	R*8	Container array for the variably dimensioned arrays

/ARRAY2/

Variables used from this common block

Name	Type	Definition
DDCTBL	R*8	Contains the characters DCTBL the composition array name

/MSIZE/

Variables used from this common block

Name	Type	Definition
MAXSIZ	I*4	Maximum size of the container array A

/LLOC/

Variables used from this common block

Name	Type	Definition
LSTLOC	I*4	Last used location of the container array A

/ARRAYS/

Variables used from this common block

Name	Type	Definition
DDITBL	R*8	Contains the characters 'DITBL', the isotope name list array
DDMTBL	R*8	Contains the characters 'DMTBL', the name of the material label array in B.HOMOG
DDMMIX	R*8	Contains the characters 'DMMIX', the name of the material mix table array in B.HOMOG
DVOLFR	R*8	Contains the characters 'VOLFRC', the name of the volume fraction array in B.HOMOG
DQCSPE	R*8	Contains the characters 'QCSPEC', the name of the array of numbers of materials in each B.HOMOG composition record

/NT/

Variables used from this common block

Name	Type	Definition
NT(14)	I*4	Number of cards of the first fourteen types in data set A.NIP NT(13) has the local name NT1 NT(14) has the local name NT2

3. Local Variables

Name	Type	Definition
L1	I*4	Temporary used in calculating the amount of storage to reserve for each variably dimensioned array used by TYPE2
L2	I*4	Flag set by IPTERR: L2 = 0, the container array A did not overflow L2 ≠ 0, the container array A did overflow

4. Functions and tasks performed by this subroutine

CALLT2 is the driver for the processing of type 14 cards and is called by INHOMG.

If calls PUTPNT to set up the pointers for the variably dimensioned arrays DMMIX, VOLFRC, DMTBL, DCTBL, and QCSPEC. It calls the type 14 card processor TYPE2. It calls WRTT2 to write composition specifications onto data set B.HOMOG.

5. Subprograms called by this subroutine

IGET (entry in POINTR)
PURGE (entry in POINTR)
TYPE2
WRTT2
ERROUT
PUTPNT (entry in POINTR)
WIPOUT (entry in POINTR)

6. Subprograms calling this subroutine

INHOMG

7. Error messages generated by this subroutine

ERROR NUMBER = nnnnn

Where nnnnn is

Number	Reason
301	Container array A has overflowed

Subroutine ERROUT (NERR)

1. Arguments

Name	Type	Definition
NERR	I*4	Contains the error number supplied by the calling program

2. Common Blocks - None

3. Local Variables

Name	Type	Definition
I	I*4	Index for printing blank lines

4. Functions and tasks performed by this subroutine

ERROUT is called whenever an error is encountered in any subprogram of module INHOMG or HOMOG. An error number is printed onto the standard output and a call is made to ABEND for an abnormal termination dump.

5. Subprograms called by this subroutine

ABEND

6. Subprograms calling this subroutine

INHOMG
CALLT1
TYPE1
CALLT2
TYPE2
RDSPEC
SKPREC

7. Error messages - None

Subroutine INHOMG

1. Arguments - None

2. Common Blocks

/ARRAY/

Variables used from this common block

Name	Type	Definition
A(10000)	R*8	Container array for the variably dimensioned arrays

/MSIZE/

Variables used from this common block

Name	Type	Definition
MAXSIZ	I*4	Maximum size of the container array A

/LLOC/

Variables used from this common block

Name	Type	Definition
LSTLOC	I*4	Last used location of the container array A

/NT/

Variables used from this common block

Name	Type	Definition
NT(14)	I*4	Number of cards of the first fourteen types in data set A.NIP NT(13) has the local name NT1 NT(14) has the local name NT2

/DSNAMS/

Variables used from this common block

Name	Type	Definition
DNAM1	R*8	Contains the characters 'A.NIP'
DNAM2	R*8	Contains the characters 'B.HOMOG'

/DSNUMS/

Variables used from this common block

Name	Type	Definition
NUM1	I*4	DSRN of data set A.NIP
NUM2	I*4	DSRN of data set B.HOMOG

/MAT/

Variables used from this common block

Name	Type	Definition
NMAT	I*4	Number of materials defined by the type 13 cards
MSLTH	I*4	Total number of names of isotopes used in defining all the materials. Each appearance of an isotope name is counted

3. Local Variables

Name	Type	Definition
N1	I*4	Temporary used in calculating the number of cards to skip on data set A.NIP
N2	I*4	Temporary used in calculating the number of cards to skip on data set A.NIP
DUM	R*8	Dummy name for array DIMIX, and ATMDEN
IDUM	I*4	Dummy name for array MSPEC
MAXNT	I*4	Highest card type present in A.NIP
NISO2	I*4	Number of names of distinct isotopes used in defining all the materials
DMODNM	R*8	Module name read from the data set with the DSRN of NUM1

4. Functions and tasks performed by this subroutine

INHOMG is the main driver for the module INHOMG and is called from the path which requires it.

It reads the first record of A.NIP and then skips past card types 1-12. It calls POINTR for initialization. If type 13 cards are present, it calls the type 13 driver CALLT1. It calls the type 14 driver CALLT2. Although it can cause an old B.HOMOG to be read, this option is not now used. At the present time, the delayed neutron option is no longer handled by this module.

5. Subprograms called by this subroutine

IGET (entry in POINTR)
PURGE (entry in POINTR)
SNIFF (ARC System module)
CALLT1
CALLT2
ERROUT
POINTR (ARC System module)
PUTPNT (entry in POINTR)
WIPOUT (entry in POINTR)

6. Subprograms calling this subroutine

MAIN

7. Error messages generated by this subroutine

ERROR NUMBER = nnnnn

Where nnnnn is

Number	Reason
101	Data set A.NIP has not been written
102	Type 13 cards are missing in data set A.NIP
103	Type 13 cards are missing in data set A.NIP
104	Type 14 cards are missing in data set A.NIP
151	The module name on data set A.NIP is not A.NIP
152	Type 14 cards are missing in data set A.NIP

Number	Reason
153	Type 14 cards are missing in data set A.NIP
20101	Unexpected end-of-file on data set A.NIP
20102	Unexpected end-of-file on data set A.NIP
20103	Unexpected end-of-file on data set B.HOMOG
20104	Unexpected end-of-file on data set B.HOMOG
30101	Parity error on data set A.NIP
30102	Parity error on data set A.NIP
30103	Parity error on data set B.HOMOG
30104	Parity error on data set B.HOMOG

Main Program MAIN

1. Arguments - None

2. Common Blocks - None

3. Local Variables - None

4. Functions and tasks performed by this program

This program provides entry into the module and calls the driver routine, INHOMG.

5. Subprograms called by this program

INHOMG

6. Programs calling this program

ARC System standard paths and other ARC System modules

7. Error messages generated by this program - None

Subroutine RDSPEC (DMMIX, VOLFRC, QCSPEC, DMTBL, DCTBL, QCSLTH, NCMP, NMAT, NUM2)

1. Arguments

Name	Type	Dimension	Definition
DMMIX	R*8	QCSLTH	Contains the material names used to define the compositions named in the array DCTBL
VOLFRC	R*8	QCSLTH	Floating point parameter which contains the volume fractions of materials which define the compositions
QCSPEC	I*4	NCMP	Contains the number of materials used to define a given composition
DMTBL	R*8	NMAT	Contains the distinct material names in the array DMMIX
DCTBL	R*8	NCMP	Contains the composition names
QCSLTH	I*4	--	Number of material names in the array DMMIX
NCMP	I*4	--	Number of composition names in the array DCTBL
NMAT	I*4	--	Number of material names in the array DMTBL
NUM2	I*4	--	DSRN of data set B.HOMOG

2. Common Blocks - None

3. Local Variables

Name	Type	Definition
I	I*4	Index

4. Functions and tasks performed by this subroutine

RDSPEC reads the composition specifications from data set B.HOMOG.

5. Subprograms called by this subroutine

ERROUT

6. Subprograms calling this subroutine

CALLT1

7. Error messages generated by this subroutine

ERROR NUMBER = nnnnn

Where nnnnn is

Number	Reason
22801	Unexpected end of file on data set B.HOMOG
32801	Parity error on data set B.HOMOG

Subroutine SKPREC (N, NERR, NUMREC)

1. Arguments

Name	Type	Dimension	Definition
N	I*4	--	DSRN of the EBCDIC data set
NERR	I*4	--	Error number to be used in case of an end-of-file or a parity error is encountered
NUMREC	I*4	--	Number of records which are to be skipped

2. Common Blocks - None

3. Local Variables

Name	Type	Definition
I	I*4	Index for skipping records

4. Functions and tasks performed by this subroutine

SKPREC skips NUMREC records on the EBCDIC data set with a data set reference number (DSRN) of N.

5. Subprograms called by this subroutine

ERROUT

6. Subprograms calling this subroutine

TYPE4

7. Error messages generated by this subroutine

20000 + NERR - End of file on data set being read.*

30000 + NERR - Parity error on data set being read.*

Subroutine TYPE1 (DIMIX, ATMDEN, MSPEC, DITBL, DMTBL)

1. Arguments

Name	Type	Dimension	Definition
DIMIX	R*8	MSLTH	Contains all the names of isotopes used in defining all the materials. Each appearance of an isotope name is entered as a separate entry.
ATMDEN	R*8	MSLTH	Contains the atom densities of isotopes in a given material.

*See error number listing in section 8.

Name	Type	Dimension	Definition
MSPEC	I*4	--	Contains the number of isotopes used to define a given material
DITBL	R*8	NISO2	Contains all the distinct names of isotopes used in defining all the materials
DMTBL	R*8	NMAT	Contains all the distinct names of the materials defined by the type 13 cards

2. Common Blocks

/ALFNUM/

Variables used from this common block

Name	Type	Definition
DBLANK	R*8	Blank characters

/NT/

Variables used from this common block

Name	Type	Definition
NT(14)	I*4	Number of cards of the first fourteen types in data set A.NIP NT(13) has the local name NT1 NT(14) has the local name NT2

/ISO/

Variables used from this common block

Name	Type	Definition
NISO2	I*4	Number of names of distinct isotopes used in defining all the materials

/DSNUMS/

Variables used from this common block

Name	Type	Definition
NUM1	I*4	DSRN of data set A.NIP

/MAT/

Variables used from this common block

Name	Type	Definition
NMAT	I*4	Number of materials defined by the type 13 cards
MSLTH	I*4	Total number of names of isotopes used in defining all the materials. Each appearance of an isotope name is counted

3. Local Variables

Name	Type	Definition
I	I*4	Index on input quantities DUU2 and UU1 which represent isotope labels and atom densities on type 13 cards in A.NIP, also index on DMTBL the material labels also index on DIMIX, the mix table entry
K	I*4	Index on DITBL the list of unique isotopes
L1	I*4	Count of the number of isotopes used to define the material currently being processed. When processing for a material is completed, MSPEC(I) is set equal to L1
L2	I*4	Counter set equal to 1 less than the number of materials already processed
IT1	I*4	Index on type 13 cards in A.NIP
UU1	I*4	Contains the atom densities which appeared on the most recently read type 13 card
DMNAME	R*8	Used to save the name of the material currently being processed
DMTNAM	R*8	Contains the material name which appeared on the most recently read type 13 card

4. Functions and tasks performed by this subroutine

TYPE1 reads and processes the type 13 cards and stores the material specifications into the variables NMAT, MSLTH, NISO2, DIMIX, ATMDEN, MSPEC, DITBL, and DMTBL.

5. Subprograms called by this subroutine

ERROUT
SQUEZE (ARC System module)

6. Subprograms calling this subroutine

CALLT1

7. Error messages generated by this subroutine

ERROR NUMBER = nnnnn

Where nnnnn is

Number	Reason
401	A material name has been doubly defined
20401	End of file on data set A.NIP
30401	Parity error on data set A.NIP

Subroutine TYPE2 (DDMIX, VOLFRC, QCSPEC, DMTBL, DCTBL)

1. Arguments

Name	Type	Dimension	Definition
DMMIX	R*8	QCSLTH	Contains all the names of the materials used in defining all the compositions
VOLFRC	R*8	QCSLTH	Contains the volume fractions of materials in a given composition

Name	Type	Dimension	Definition
QCSPEC	I*4	QCSLTH	Contains the number of materials used to define a given composition
DMTBL	R*8	NMAT	Contains the names of the distinct materials used to define all the compositions
DCTBL	R*8	NCMP	Contains the distinct names of all the compositions defined by the type 14 cards

2. Common Blocks

/NT/

Variables used from this common block

Name	Type	Definition
NT(14)	I*4	Number of cards of cards of the first fourteen types in data set A.NIP NT(13) has the local name NT1 NT(14) has the local name NT2

/ARRAYS/

Variables used from this common block

Name	Type	Definition
DDITBL	R*8	Contains the characters DITBL

/DSNAMS/

Variables used from this common block

Name	Type	Definition
DNAM2	R*8	Contains the characters B.HOMOG

/ARRAY/

Variables used from this common block

Name	Type	Definition
A	R*8	Container array for the variably dimensioned arrays

/COMP/

Variables used from this common block

Name	Type	Definition
NCMP	I*4	Number of compositions defined by type 14 cards
QCSLTH	I*4	Total number of names of materials used in defining all the compositions

/ISO/

Variables used from this common block

Name	Type	Definition
NISO2	I*4	Number of names of distinct isotopes used in defining all the materials, if type 13 cards are present. If type 13 cards are missing, then NISO2 is set equal to NAMT

/MAT/

Variables used from this common block

Name	Type	Definition
NMAT	I*4	Total number of names of distinct materials used in defining all the compositions

/DSNUMS/

Variables used from this common block

Name	Type	Definition
NUM1	I*4	DSRN of data set A.NIP
NUM2	I*4	DSRN of data set B.HOMOG

/ALFNUM/

Variables used from this common block

Name	Type	Definition
DBLANK	R*8	Blank characters
ONE	R*8	Contains a floating point 1.0

3. Local Variables

Name	Type	Definition
I	I*4	Index on quantities DUU2 and UU1, also index on DCTBL composition names index on DMMIX the composition mix table
K	I*4	Index on DMTBL - the materials labels
N	I*4	Contains the integer 1
L1	I*4	Count of the number of materials used to define the composition currently being processed
L2	I*4	Equal to one less than the number of compositions already processed
IPT	I*4	Pointer to array DITBL - 1 used as a base for defining other array names contained in DMTBL
IT2	I*4	Index on type 14 cards in A.NIP
UU1(3)	R*8	Contains the volume fractions which appeared on the most recently read type 14 card
DUU2(3)	R*8	Contains the names of the materials which appeared on the most recently read type 14 card
DCNAM	R*8	Contains the composition name which appeared on the most recently read type 14 card
DCNAME	R*8	Used to save the name of the composition currently being processed

4. Functions and tasks performed by this subroutine

TYPE2 reads and processes the type 14 cards and stores the composition specifications into the variables NCMP, QCSLTH, NMAT, DMMIX, VOLFRC, QCSPEC, DMTBL, and DCTBL.

If type 13 cards are missing, it creates material specifications such that each distinct isotope named on a type 14 card will be a material defined as that isotope with an atom density of 1.0; it then writes these specifications onto data set B.HOMOG.

5. Subprograms called by this subroutine

IGET (entry in POINTR)
SNIFF (ARC System module)
ERROUT
SQUEZE (ARC System module)

6. Subprograms calling this subroutine

7. Error messages generated by this subroutine

ERROR NUMBER = nnnnn

Where nnnnn is

Number	Reason
501	A composition name has been doubly defined
20501	End of file on data set A.NIP
30501	Parity error on data set A.NIP

Subroutine WRTT1 (DIMIX, ATMDEN, MSPEC, DITBL, DMTBL)

1. Arguments

Name	Type	Dimension	Definition
DIMIX	R*8	MSLTH	Contains all the names of isotopes used in defining all the materials. Each appearance of an isotope name is counted as a separate entry
ATMDEN	R*8	MSLTH	Contains the atom densities of isotopes in a given material
MSPEC	I*4	NMAT	Contains the number of isotopes used to define a given material
DITBL	R*8	NISO2	Contains all the distinct names of isotopes used in defining all the materials
DMTBL	R*8	NMAT	Contains all the distinct names of the materials defined by the type 13 cards

2. Common Blocks

/DSNAMS/

Variables used from this common block

Name	Type	Definition
DNAM2	R*8	Contains the characters B.HOMOG

/DSNUMS/

Variables used from this common block

Name	Type	Definition
NUM2	I*4	DSRN of data set B.HOMOG

/MAT/

Variables used from this common block

Name	Type	Definition
NMAT	I*4	Number of materials defined by the type 13 cards
MSLTH	I*4	Total number of names of isotopes used in defining all the materials. Each appearance of an isotope name is counted

/ISO/

Variables used from this common block

Name	Type	Definition
NISO2	I*4	Number of names of distinct isotopes used in defining all the materals

3. Local Variables - None

4. Functions and tasks performed by this subroutine

WRITT1 is called by CALLT1 if 13 cards are present. It writes the material specifications formed in TYPE1 onto data set B.HOMOG.

5. Subprograms called by this subroutine

SNIFF (ARC System module)

6. Subprograms calling this subroutine

CALLT1

7. Error messages generated by this subroutine - None

Subroutine WRTT2 (DMMIX, VOLFRC, QCSPEC, DMTBL, DCTBL)

1. Arguments

Name	Type	Dimension	Definition
DMMIX	R*8	QCSLTH	Contains all the names of the materials used in defining all the compositions
VOLFRC	R*8	QCSLTH	Contains the volume fractions of materials in a given composition
QCSPEC	I*4	NCMP	Contains the number of materials used to define a given composition
DMTBL	R*8	NMAT	Contains the names of the distinct materials used to define all the compositions
DCTBL	R*8	NCMP	Contains the distinct names of all the compositions defined by the type 14 cards

2. Common Blocks

/MAT/

Variables used from this common block

Name	Type	Definition
NMAT	I*4	Total number of names of distinct materials used in defining all the compositions

/DSNUMS/

Variables used from this common block

Name	Type	Definition
NUM2	I*4	DSRN of data set B.HOMOG

/COMP/

Variables used from this common block

Name	Type	Definition
NCMP	I*4	Number of compositions defined by the type 14 cards
QCSLTH	I*4	Total number of names of materials used in defining all the compositions

3. Local Variables - None

4. Functions and tasks performed by this subroutine

WRTT2 is called by CALLT2. It writes the composition specifications formed in TYPE2 onto data set B.HOMOG.

5. Subprograms called by this subroutine - None

6. Subprograms calling this subroutine

CALLT2

7. Error messages generated by this subroutine - None

5. INHOMG (NUI001) Common Block Descriptions

This section provides more detailed information about the common blocks used by the INHOMG (NUI001) subprograms. The common blocks appear in alphabetical order by name.

For each common block, all variables are listed in order to appearance in the block by name and type, and the definition of each is given. In addition, there appears foreeach variable a list of the subprograms in which the value of the variable is set or altered.

A special case is the /ARRAY/ common block, which contains the container array A used by the dynamic storage allocation module POINTR (ANL-7711). Section 6 contains a list of the names of all arrays which may be defined in the container array at any point in the execution of the module.

/ALFNUM/

Name	Type	Subprograms where values are set or modified	Definition
DBLANK	R*8	BLOCK DATA	Blank characters
ONE	R*8	BLOCK DATA	Contains a floating point 1.0

/ARRAY/

Name	Type	Subprograms where values are set or modified	Definition
A(10000)	R*8	INHOMOG	Container array for the variably dimensioned arrays

/ARRAYS/

Name	Type	Subprograms where values are set or modified	Definition
DDIMIX	R*8	BLOCK DATA	Contains the characters 'DIMIX', name of the mix table array in B.HOMOG record type 2
DATMDE	R*8	BLOCK DATA	Contains the characters 'ATMDEN', the name of the atomic density table in B.HOMOG
DMSPEC	R*8	BLOCK DATA	Contains the characters 'MSPEC', the name of the isotopes comprising each material in the set
DDITBL	R*8	BLOCK DATA	Contains the characters 'DITBL', the name of the array of all isotope names in B.HOMOG
DDMTBL	R*8	BLOCK DATA	Contains the characters 'DMTBL', the name of the material label array in B.HOMOG

Name	Type	Subprograms where values are set or modified	Definition
DDMMIX	R*8	BLOCK DATA	Contains the characters 'DMMIX', the name of the mix table array in B.HOMOG
DVOLFR	R*8	BLOCK DATA	Contains the characters 'VOLFRC', the name of the volume fraction table in B.HOMOG
DQCSPE	R*8	BLOCK DATA	Contains the characters 'QCSPEC', the name of the array of numbers of materials in each B.HOMOG composition record

/ARRAY2/

Name	Type	Subprograms where values are set or modified	Definition
DDCTBL	R*8	BLOCK DATA	Contains the characters 'DCTBL', the name of the composition label array

/COMP/

Name	Type	Subprograms where values are set or modified	Definition
NCMP	I*4	TYPE2	Number of compositions defined by type 14 cards
QCSLTH	I*4	TYPE2	Total number of names of materials used in defining all the compositions

/DSNAMS/

Name	Type	Subprograms where values are set or modified	Definition
DNAM1	R*8	BLOCK DATA	Contains the characters 'A.NIP'
DNAM2	R*8	BLOCK DATA	Contains the characters 'B.HOMOG'

/DSNUMS/

Name	Type	Subprograms where values are set or modified	Definition
NUM1	I*4	INHOMG	DSRN of data set A.NIP
NUM2	I*4	INHOMG	DSRN of data set B.HOMOG

/ISO/

Name	Type	Subprograms where values are set or modified	Definition
NISO2	I*4	TYPE1 TYPE2	Number of names of distinct isotopes used in defining all the materials, if type 13 cards are present. If type 13 cards are missing, then NISO2 is set equal to NMAT

/LLOC/

Name	Type	Subprograms where values are set or modified	Definition
LSTLOC	I*4	POINTR INHOMOG	Last used location of the container array A

/MAT/

Name	Type	Subprograms where values are set or modified	Definition
NMAT	I*4	TYPE1	Number of materials defined by the type 13 cards
MSLTH	I*4	TYPE1	Total number of names used in defining all the materials. Each appearance of an isotope name is counted

/MSIZE/

Name	Type	Subprograms where values are set or modified	Definition
MAXSIZ	I*4	INHOMOG	Maximum size of the container array A

/NT/

Name	Type	Subprograms where values are set or modified	Definition
NT(14)	I*4	INHOMOG	Number of cards of the first fourteen types in data set A.NIP NT(13) has the local name NT1 NT(14) has the local name NT2

6. INHOMG (NUI001) Dynamic Storage Array Allocation

This section describes all arrays which may be defined by this module in common block /ARRAY/ A, using the facilities of the dynamic storage allocation module POINTR (See ANL-7711). The arrays are listed in alphabetical order by the name given them in the POINTR name table. For each array, the following information is given:

1. Type

2. Dimension, in terms of module variables

3. Names of subprograms where action is taken that affects the status of the array in the container, followed in parenthesis by the action that is taken in the subprogram. (Here, significant POINTR calls are generally PUTPNT, which allocates space in the container for the array; REDEF, which sets aside space if the array is not present or redefines its space allocation if it is, and WIPOUT, which removes the array from the name table, thus making it inaccessible. The meaning of any other POINTR calls listed can be found in the POINTR documentation.)

4. Names of subprograms in which the value of elements of the array are set or altered

5. The definition of the array contents.

If the meaning of a variable used as the dimension of an array is not known, it can be found in the subprogram in which a call to PUTPNT or REDEF is made for that array.

Array Name	Type	Dimension	Subprograms issuing significant POINTR calls	Subprograms where values are set or modified	Definition
DDIMIX	R*8	6*L1 MSLTH	CALLT1 (PUTPNT) CALLT1 (REDEF) CALLT1 (WIPOUT)	TYPE1	Array DIMIX, the mix table in record type 2 of B.HOMOG also contained in DMTABL1 in record type 4 of B.HOMOG, containing composition mixture data
DATMDE	R*8	6*L1 MSLTH	CALLT1 (PUTPNT) CALLT1 (REDEF) CALLT1 (WIPOUT)	TYPE1	The array ATMDEN, the atomic density table in record type 2 of B.HOMOG containing material mixture data
DMSPEC	I*4	2*L1 NMAT	CALLT1 (PUTPNT) CALLT1 (REDEF) CALLT1 (WIPOUT)	TYPE1	The array, MSPEC, the number of isotopes comprising each material - record type 2 of B.HOMOG containing material mixture data
DDITBL	R*8	2*L1 NMAT	CALLT1 (PUTPNT) CALLT1 (REDEF) CALLT1 (WIPOUT)	TYPE1	Array DITBL, the list of all isotopes used this module; each label appears one record type 2 of B.HOMOG containing material mixture data
DDMTBL	R*8	2*L1 NMAT	CALLT1 (PUTPNT) CALLT1 (REDEF) CALLT1 (WIPOUT)	TYPE1 TYPE2	Contains the array DMTBL, material labels of record type 2 of B.HOMOG containing material mixture data

Array Name	Type	Dimension	Subprograms issuing significant POINTR calls	Subprograms where values are set or modified	Definition
DDMMIX	R*8	QCSLTH 6*L1	CALLT1 (PUTPNT) CALLT1 (WIPOUT) CALLT2 (PUTPNT) CALLT2 (WIPOUT)	TYPE2 RDSPEC	Array DMMIX, the mix table in record type 4 of B.HOMOG containing composition mixture data
DVOLFR	R*8	QCSLTH	CALLT1 (PUTPNT) CALLT1 (WIPOUT)	TYPE2 RDSPEC	Array VOLFRC volume fractions in output record type 4 of B.HOMOG containing composition mixture table
DQCSPE	R*8	NCMP 2*L1	CALLT1 (PUTPNT) CALLT1 (WIPOUT) CALLT2 (PUTPNT) CALLT2 (WIPOUT)	TYPE2 RDSPEC	Array MCSPEC the number of materials comprising each composition in composition mixture data record in B.HOMOG (type 4)
DDCTBL	R*8	NCMP 2*L1	CALLT1 (PUTPNT) CALLT1 (WIPOUT) CALLT2 (PUTPNT) CALLT2 (WIPOUT)	TYPE2 RDSPEC	Array DCTBL, which contains the labels of compsotions for record type 4 of B.HOMOG containing composition mixture data

7. INHOMG (NUI001) Data Set Usage

This section contains descriptions of all data sets used by this module. For each data set used, the following information is given:

1. The name of the data set, if it is an ARC System data set, or a description of its contents and function if it is a scratch data set used only within the module.

2. The record structure of the data set, if it is a scratch data set.

3. The names of subprograms in which the data set is read and/or written, along with a list of the record types which are read or written within each subprogram and the name of the variable which contains the reference number of the data set.

Complete descriptions of the record structure and contents of each ARC System data set can be found in ANL-7711 of this series.

Name or description of data set - A.NIP, General Input for Neutronics Calculations

Record Structure - ARC System data set

Read in subprograms	Record types	Reference variable
INHOMOG	BCDDS Specification (card types 1 to 12)	NUM1
TYPE1	Material Specification (card type 13)	NUM1
TYPE2	Composition Specification (card type 14)	NUM1

Written in subprograms - None

Name or description of data set - B.HOMOG, Binary Input for Cross-Section Homogenization

Record structure - ARC System data set

Read in subprograms	Record types	Reference variable
INHOMG	Material Mixture Control Data (type 1) Material Mixture Data (type 2)	NUM2
SKPREC	Material Mixture Control Data (type 1) Material Mixture Data (type 2)	NUM2
CALLT1	Composition Mixture Control Data (type 3)	NUM2
RDSPEC	Composition Mixture Data (type 4)	NUM2

Written in subprograms	Record types	Reference variable
WRTT1	Material Mixture Control Data (type 1) Material Mixture Data (type 2)	NUM2

Written in subprograms	Record types	Reference variable
TYPE2	Material Mixture Control Data (type 1) Material Mixture Data (type 2)	NUM2
WRTT2	Composition Mixture Control Data (type 3) Composition Mixture Data (type 4)	NUM2

8. INHOMOG (NUI001) Error Messages

Error messages in the INHOMG module are printed by a single subprogram, ERROUT, which is called from various other subprograms in the module with an error number as the argument. This error number appears in the printed output in place of the 'nnnnn' in the message 'ERROR NUMBER=nnnnn'. The subprogram then calls ABEND which terminates execution.

The error numbers and their meanings are listed in this section by the calling subroutine name in the same order as in section 4.

CALLT1

Number	Reason
201	Container array A has overflowed.

CALLT2

Number	Reason
301	Container array A has overflowed.

INHOMG

Number	Reason
101	Data set A.NIP has not been written.
102	Type 13 cards are missing in data set A.NIP.
103	Type 13 cards are missing in data set A.NIP.
104	Type 14 cards are missing in data set A.NIP.
151	The module name on data set A.NIP is not A.NIP.
152	Type 14 cards are missing in data set A.NIP.
153	Type 14 cards are missing in data set A.NIP.
20101	Unexpected end-of-file on data set A.NIP.
20102	Unexpected end-of-file on data set A.NIP.
20103	Unexpected end-of-file on data set B.HOMOG.

Number	Reason
20104	Unexpected end-of-file on data set B.HOMOG.
30101	Parity error on data set A.NIP.
30102	Parity error on data set A.NIP.
30103	Parity error on data set B.HOMOG.
30104	Parity error on data set B.HOMOG.

RDSPEC

Number	Reason
22801	Unexpected end-of-file on data set B.HOMOG.
32801	Parity error on data set B.HOMOG.

SKPREC

Number	Reason
20000+NERR*	See this number as listed under other subroutines.
30000+NERR*	See this number as listed under other subroutines.

*NERR is the error number supplied to SKPREC by calling subprogram.

TYPE1

Number	Reason
401	A material name has been doubly defined.
20401	End-of-file on data set A.NIP.
30401	Parity error on data set A.NIP.

TYPE2

Number	Reason
501	A composition name has been doubly defined.
20501	End-of-file on data set A.NIP.
30501	Parity error on data set A.NIP.

9. INHOMG (NUI001) Timing Information

See Part Two., Section 9 for timing information.

10. INHOMG (NUI001) Sample Output

The material below is representative of the INHOMG module printed output. The output is described in Section 2, and more fully below.

The first line of output is a SNIFF module message which indicates that B.HOMOG is being accessed.

This group of output lines shows records 1 and 2 of B.HOMOG. Next is the name B.HOMOG and 5 numbers which indicate the number of type 13 cards, the number of type 14 cards, and the DSRN of B.HOMOG 3 times.

Line 3 contains the values of MSLTH, NMAT, and NISO2, the material mix table length, the number of materials and the number of isotopes.

The material mix data is separated as follows:

Line 4 contains the isotope mix table, DIMIX.

The next group of floating-point numbers is the atom-density table, ATMDEN.

The integers which follow on a new line are the list of numbers of isotopes which comprise each material, MSPEC. A name list follows this and it contains DITBL, the list of all isotope names used in this list.

Last in this group, a list of material labels is given, DMTBL.

Starting on a new page, a second group of quantities similar to the first shows the quantities written in records 3 and 4 of data set B.HOMOG.

When no type 13 cards have been input, this is the sole output printed.

It contains:

A SNIFF message concerning the status of B.HOMOG.

The next line contains the name of the data set, number of type 13 and 14 cards and the DSRN written three times.

Following are the quantities MDSLTH, NCMP, and NMAT, the composition mix table length, number of compositions and number of materials.

The Composition Mixture is separated as follows:

First, DMMIX the material mix table is printed.

Next, VOLFRC, the volume fraction table appears as floating point numbers. The list of integers following is MCSPEC, the number of materials in each composition. A list of material, labels, DMTBL is next. Finally, DCTBL, the list of composition labels is given.

After the above edit, the name B.HOMOG again appears alone with the numbers of type 13 cards, type 14 cards, flag NUM2 which is the old B.HOMOG DSRN and the DSRN of the new B.HOMOG just written.

Another SNIFF module message indicates that XS.DELAY has been accessed but nothing further is done upon returning to the MAIN program, the message 'HI' is written.

Any error would have routed the program to the error message routine and a dump would follow if requested.

The following example shows the latter case with both type 13 and type 14 card input.

Example 2 below shows the output produced from input containing type 14 cards only.

```
SNIFF**********B.HOMOG  HAS NOT BEEN WRITTEN YET AND YOU HAVE REQUESTED TO READ IT.
   B.HOMOG      0     21      0      0      0


  57  11   9
 R6N12       R7N14       R8N15       R2N13       R1N16       R9N22       R6N12       R7N14       R8N15       R2N13       R1N16       R9N22
R6N12       R7N14       R8N15       R1N16       R2N13       R5N11       R6N12       R7N14       R8N15       R6N12       R7N14       R8N15
R6N12       R7N14       R8N15       R1N16       R2N13       R6N12       R7N14       R8N15       R1N16       R2N13       R9N22       R6N12
R7N14       R8N15       R1N16       R6N12       R7N14       R8N15       R1N16       R6N12       R7N14       R8N15       R1N16       R2N13
R5N11       R4N24       R1N16       R9N22       R6N12       R2N13       R3N23       R7N14       R8N15
   0.683850D-02   0.195180D-02   0.864300D-03   0.293506D-01   0.217005D-02   0.403900D-02   0.683850D-02   0.195180D-02
   0.864300D-03   0.339730D-01   0.726000D-04   0.625200D-02   0.130430D-01   0.372230D-02   0.164830D-02   0.485330D-02
   0.103800D-04   0.519966D-01   0.564330D-02   0.139780D-02   0.752447D-01   0.564720D-01   0.161160D-01   0.713630D-02
   0.433200D-02   0.114000D-02   0.540000D-03   0.810000D-04   0.399300D-01   0.683850D-02   0.195180D-02   0.864300D-03
   0.214658D-02   0.293506D-01   0.403900D-02   0.529060D-02   0.131040D-02   0.705419D-01   0.214658D-02   0.493790D-02
   0.122310D-02   0.658391D-01   0.479900D-02   0.130430D-01   0.372230D-02   0.164830D-02   0.479900D-02   0.103800D-04
   0.519966D-01   0.766000D-04   0.673000D-04   0.151360D-02   0.806720D-02   0.302128D-01   0.162080D-02   0.230280D-02
   0.101920D-02
   6   6   6   3   3   5   6   4   4   6   8
 R6N12       R7N14       R8N15       R2N13       R1N16       R9N22       R5N11       R4N24       R3N23
 C1          C2          C3          C4          C5          C6          C7          C8          C9          C10         C11
   B.HOMOG      0     21     27     27
SNIFF**********XS.DELAY HAS NOT BEEN WRITTEN YET AND YOU HAVE REQUESTED TO READ IT.
  HI


    B.HOMOG
  SNIFF**********B.HOMOG  HAS NOT BEEN WRITTEN YET AND YOU HAVE REQUESTED TO READ IT.
    B.HOMOG      2      2      0      0      0


    4   2   4
  U235        S           POW         BE9
    0.399000D-02   0.399000D-02   0.244000D-01   0.990000D-01
    3   1
  U235        S           POW         BE9
  M1          M2


    2   2   2
  M1          M2
    0.100000D 01   0.100000D 01
    1   1
  M1          M2
  C1          C2
    B.HOMOG      2      2     27     27
  SNIFF**********XS.DELAY HAS NOT BEEN WRITTEN YET AND YOU HAVE REQUESTED TO READ IT.
    HI
```

PART TWO.
MULTIGROUP CROSS-SECTION HOMOGENIZATION CALCULATION MODULE, HOMOG (NUC001)

Designed By - J. V. Zapatka*

Programmed By - J. V. Zapatka

Documented By - E. A. Kovalsky

---

*Now at Bank Computer Network Corporation, Chicago, Illinois.

1. HOMOG (NUC001) Introduction

a. Description of Capabilities

This module reads binary data sets which specify materials and/or compositions, isotopic cross section data, isotopic fission-spectrum fractions, and isotopic delayed neutron data. According to the user's option, it computes material cross section data material fission-spectrum fractions, material delayed-neutron data, and/or composition cross section data, composition fission-spectrum fractions, and composition delayed neutron data, and writes these data on the appropriate binary data sets.

b. Standard Paths Which Utilize This Module, and Other Modules Utilized by Each Path

Paths Utilizing This Module \ Modules Utilized By Each Path	DELDATA (CSI007) Delayed Neutron Data Preparation	INHOMG (NUI001) Multigroup Cross Section Homog. Specifications	HOMOG (NUC001) Multigroup Cross Section Homog.	HHOMOG (NUC007) Material-to-Composition Cross Section Homog.	GNIP (NUI002) Neutronics Input Processor	DIF1D (NUC002) 1-D Diffusion Theory k_{eff} and Source Calculations (DARC1D)	D1DSCH (NUC004) 1-D Diffusion Theory Criticality Search (DARC1D)	DIF2D (NUC005) 2-D Diffusion Theory k_{eff} and Source Calculations (DARC2D)	D2DSCH (NUC006) 2-D Diffusion Theory Criticality Search (DARC2D)	MODXSISO (NUI006) Run-Time Microscopic Cross-Section Modification	PARC1D (AJC003) 1-D Diffusion Theory Perturbation
STP001 1-D diffusion theory		X	X		X	X	X			X	
STP002 1-D transport theory		X	X		X					X	
STP003 2-D diffusion theory		X	X		X	X	X			X	
STP004 burnup diffusion theory		X	X	X	X	X	X	X	X		
STP006 1-D diffusion perturbation	X	X	X		X	X	X			X	X
STP007 2-D diffusion perturbation	X	X	X		X			X	X	X	
STP008 Spatial flux synthesis		X	X		X						
STP011 2-D transport theory		X	X		X					X	

b. Standard Paths Which Utilize This Module, and Other Modules Utilized by Each Path (Contd.)

Paths Utilizing This Module \ Modules Utilized By Each Path	PARC2D (AJC004) 2-D Diffusion Theory Perturbation	SYN2D (AJC005) Spatial Flux Synthesis	SNARC1D: SNIN1D (NUI005) 1-D Discrete Ordinate Transport Theory Specifications	SNARC1D: SNARC1D (NUC003) 1-D Discrete Ordinate Transport Theory Calculations	TARGET (NUC008) 2-D Discrete Ordinate Transport Theory Calculations	OUTPUTR (NUE002) 2-D Discrete Ordinate Transport Theory Output	OUTMAN1D (NUE001) 1-D Neutronics Output Manipulation	INVENT1D (AJC001) 1-D Neutron Inventory	INVENT2D (AJC002) 2-D Neutron Inventory	CPGEOM (AJC006) Geometry Data Set (GEOM) Copier	REBUS: INFUEL (FCI001) Fuel Cycle Specifications	REBUS: FUELCY (FCC001) Fuel Cycle Analysis
STP001 1-D diffusion theory							X	X				
STP002 1-D transport theory			X	X			X	X				
STP003 2-D diffusion theory							X	X	X			
STP004 burnup diffusion theory											X	X
STP006 1-D diffusion perturbation							X	X		X		
STP007 2-D Diffusion perturbation	X								X	X		
STP008 spatial flux synthesis		X										
STP011 2-D transport theory					X	X			X			

c. Data Sets Utilized by This Module

Upper-interface Data Sets	Records Read
B.HOMOG, Binary Version of Homogenization Input	All
XS.ISO or XS.ISO2, Microscopic Group Cross Sections, File 1 or Files 2, 3, 4	All
XS.M.ANI, Anisotropic Macroscopic Material Cross Sections	All
XS.M.AUX, Auxiliary Macroscopic Material Cross Sections	All
XS.M.MIN, Macroscopic Material Cross Sections	All

Lower-interface Data Sets	Records Written
XS.ISO2, Microscopic Group Cross Sections	All
XS.M.ANI, Anisotropic Macroscopic Material Cross Sections	All
XS.M.AUX, Auxiliary Macroscopic Material	All
XS.M.MIN, Macroscopic Material Cross Sections	All
XS.C.ANI or XS.C.MI1, Anisotropic Macroscopic Composition Cross Sections	All
XS.C.AUX or XS.C.AU1, Auxiliary Macroscopic Composition Cross Sections	All
XS.C.MIN or XS.C.MI1, Macroscopic Composition Cross Sections	All

2. HOMOG (NUC001) Description of Problem and Method of Solution

a. Introduction

Given isotopic cross section data, isotopic fission-spectrum fractions, isotopic delayed-neutron data, material specifications, and composition specifications, the module computes the desired material cross section data, material fission-spectrum fractions, composition cross section data, composition fission-spectrum fractions, material delayed-neutron data, and composition delayed-neutron data.

b. Material Cross Sections

In general, material cross sections are formed by homogenizing isotopic cross sections as follows:

$$\Sigma_x(g,m) = \sum_{i\epsilon m} N(i\epsilon m) \cdot \sigma(g,i) \quad ,$$

where x is the cross section type;

$\Sigma_x(g,m)$ is the macroscopic material cross section of type x, group g and material m;

$\sigma_x(g,i)$ is the microscopic isotopic cross section of type x, group g and isotopic i;

and $N(i\epsilon m)$ is the atom density of isotope i in material m.

x, $\Sigma_x(g,m)$ and $\sigma_x(g,i)$ can be any of the following:

	X = TYPE	SYMBOL (Σ_x)	SYMBOL (σ_x)
1.	Inelastic Scattering (Order ℓ)	$\Sigma_{in}^{(\ell)}(g\to k,m)$	$\sigma_{in}^{(\ell)}(g\to k,i)$
2.	Elastic Scattering (Order ℓ)	$\Sigma_{e\ell}^{(\ell)}(g\to k,m)$	$\sigma_{e\ell}^{(\ell)}(g\to k,i)$

	X = TYPE	SYMBOL (Σ_X)	SYMBOL (σ_X)
3.	N2N Scattering (Order ℓ)	$\Sigma^{(\ell)}_{n,2n}(g\to k,m)$	$\sigma^{(\ell)}_{n,2n}(g\to k,i)$
4.	Capture (m,γ)	$\Sigma_{(n,\gamma)}(g,m)$	$\sigma_{(n,\gamma)}(g,i)$
5.	Capture (n,α)	$\Sigma_{(n,\alpha)}(g,m)$	$\sigma_{(n,\alpha)}(g,i)$
6.	Capture (n,p)	$\Sigma_{(n,p)}(g,m)$	$\sigma_{(n,p)}(g,i)$
7.	Fission	$\Sigma_f(g,m)$	$\sigma_f(g,i)$
8.	Nu times Fission	$\nu\Sigma_f(g,m)$	$\nu\sigma_f(g,i)$
9.	Transport	$\Sigma_{tr}(g,m)$	$\sigma_{tr}(g,i)$
10.	True (non-transport corrected) P_0 self-scatter	$\Sigma_{aniso}(g\to g,m)$	$\sigma_{aniso}(g\to g,i)$

Other material cross sections and their formulation are as follows:

1. Inelastic Removal $\Sigma^{rem}_{in}(g,m)$

$$\Sigma^{rem}_{in}(g,m) = \sum_{\substack{k \\ k\neq g}} \Sigma^{(0)}_{in}(g\to k,m)$$

2. Elastic Removal $\Sigma^{rem}_{e\ell}(g,m)$

$$\Sigma^{rem}_{e\ell}(g,m) = \sum_{\substack{k \\ k\neq g}} \Sigma^{(0)}_{e\ell}(g\to k,m)$$

3. N2N Removal $\Sigma^{rem}_{n2n}(g,m)$

$$\Sigma^{rem}_{n2n}(g,m) = \sum_{k} \Sigma^{(0)}_{n2n}(g\to k,m) - 2\,\Sigma^{(0)}_{n2n}(g\to g,m)$$

4. Total Isotropic Scattering $\Sigma^{(0)}_{scat}(g\to k,m)$

$$\Sigma^{(0)}_{scat}(g\to k,m) = \Sigma^{(0)}_{in}(g\to k,m) + \Sigma^{(0)}_{e\ell}(g\to k,m) + 2\Sigma^{(0)}_{n2n}(g\to k,m)$$

$\Sigma^{(0)}_{e\ell}(g\to g,m)$ is the transport crorrected self scatter cross section

TYPE	SYMBOL
5. Total Anisotropic Scattering	$\Sigma_{scat}^{(\ell>0)}(g\to k,m)$

$$\Sigma_{scat}^{(\ell>0)}(g\to k,m) = \Sigma_{in}^{(\ell>0)}(g\to k,m) + \Sigma_{e\ell}^{(\ell>0)}(g\to k,m) + 2\Sigma_{n2n}^{(\ell>0)}(g\to k,m)$$

6. Absorption $\Sigma_a(g,m)$

$$\Sigma_a(g,m) = \Sigma_{(n,\gamma)}(g,m) + \Sigma_{(n,\alpha)}(g,m) + \Sigma_{(n,p)}(g,m) + \Sigma_f(g,m)$$

7. Total Removal $\Sigma_{total}^{rem}(g,m)$

$$\Sigma_{total}^{rem}(g,m) = \Sigma_a(g,m) + \Sigma_{in}^{rem}(g,m) + \Sigma_{e\ell}^{rem}(g,m) + \Sigma_{n2n}^{rem}(g,m)$$

8. Total $\Sigma_t(g,m)$

$$\Sigma_t(g,m) = \Sigma_{tr}(g,m) + \Sigma_{aniso}(g\to g,m) - \Sigma_{e\ell}^{(0)}(g\to g,m)$$

c. Material Fission-spectrum Fractions

There are two cases:

(a) All fissionable isotopes present have the same parent group-independent vector.

(b) All fissionable isotopes present do not have the same parent group-independent vector.

For Case (a), no homogenization is done and the material fission spectrum fraction is taken to be the same as the isotope fission spectrum fraction.

$$\bar{\chi}(g) = \chi(g)$$

For Case (b), any vector present is expanded to a matrix, each column of which is identical to the vector. Homogenization is performed as follows:

$$\bar{\chi}(k\to g,m) = \frac{\sum_{i\varepsilon m} \chi(k\to g,i) \cdot N(i\varepsilon m) \cdot \nu\sigma_f(k,i)}{\nu\Sigma_f(k,m)} ,$$

where

$\bar{\chi}(k\to g,m)$ is the material fission-spectrum fraction for material m from parent group k to daughter group g, and $\chi(k\to g,i)$ is the isotope fission-spectrum fraction for isotope i.

d. Material Delayed-neutron Data

(a) Prompt Nu times Fission Material Cross Section

$$\nu_p\Sigma_f(g,m) = \sum_{i\varepsilon m} [\nu(g,i) - Y(g,i)] \cdot N(i\varepsilon m) \cdot \sigma_f(g,i),$$

where

$\nu_p\Sigma_f(g,m)$ is the prompt nu times fission cross section for material m and group g,

$\nu(g,i)$ is the nu for isotope i, group g,

and

$Y(g,i)$ is the delayed neutron yield for isotope i, group g.

(b) Material Delayed Chi

$$\tilde{\chi}(g,F,m) = \sum_{i\varepsilon m} A(F,i) \cdot Y(g,i) \cdot N(i\varepsilon m) \cdot \sigma_f(g,i)/\nu_p\Sigma_f(g,m)$$

where

$\tilde{\chi}(g,F,m)$ is the delayed chi for material m, family F and group g;

and

$A(F,i)$ is the fraction of $Y(g,i)$ that goes into family F, $\sum_F A(F,i)=1$.

e. Composition Cross Sections

Composition cross sections are formed by homogenizing material cross sections as follows:

$$\bar{\Sigma}_x(g,c) = \sum_{m\varepsilon c} VF(m\varepsilon c) \cdot \Sigma_x(g,m) ,$$

where

$\bar{\Sigma}_x(g,c)$ is the macroscopic composition cross section of type x, group g and composition c;

and

$VF(m\varepsilon c)$ is the volume fraction of material m in composition c.

x can be any of the cross-section types listed under material cross sections.

f. Composition Fission-spectrum Fractions

For the two cases mentioned under Material Fission-spectrum Fractions:

(a) $\bar{\bar{\chi}}(g) = \bar{\chi}(g)$

(b) $$\bar{\bar{\chi}}(k\to g,c) = \frac{\sum_{m\varepsilon c} \bar{\chi}(k\to g,m) \cdot VF(m\varepsilon c) \cdot \nu\Sigma_f(k,m)}{\overline{\nu\Sigma}_f(k,c)}$$

g. Composition Delayed-neutron Data

(a) Prompt Nu times Fission Composition Cross Section

$$\overline{\nu_p\Sigma_f}(g,c) = \sum_{m\varepsilon c} VF(m\varepsilon c) \cdot \nu_p\Sigma_f(g,m)$$

(b) Composition Delayed Chi

$$\tilde{\bar{\chi}}(g,F,c) = \frac{\sum_{m\varepsilon c} VF(m\varepsilon c) \cdot \chi(g,F,c) \cdot \nu_p\Sigma_f(g,m)}{\overline{\nu_p\Sigma}_f(g,c)} .$$

h. Description of Output

The NUC001 module output consists of binary data sets described in part c of this section and the printed output described more fully in section 10.

Data set XS.ISO2 is written if it was not an input data set. If isotopes to materials homogenization has been performed, binary data sets XS.M.MIN, XS.M.ANI, and XS.M.AUX are written when data set reference numbers have been provided in the call to the module.

For a materials to compositions homogenization, binary data sets XS.C.MIN, XS.C.ANI, and XS.C.AUX are written when the corresponding material data set has been used as input.

All of these binary data sets may be produced when the isotopes to materials to compositions option has been specified and when data set reference numbers for the material data sets have been provided.

When an output edit has been specified in the call to the module, any binary data set which has been written will be read and printed edit will appear on the printed output.

The arguments provided in the calls to this module are determined by the user's input to the calling program or standard path.

3. HOMOG (NUC001) Description of Module Flow

This section defines the overlay structure of this module and the flow of logic through the subprograms which form the module.

Section a. consists of an overlay structure diagram, showing the ARC System segments and HOMOG module segments required by this module and their positions in the overlay hierarchy. This is followed by a list of the subprograms located in each HOMOG module segment.

Section b. illustrates the flow of logic through the subprograms of this module, and section c. describes this flow in terms of the module's functions.

In section b. the quantities written over arrows on the diagram which follows represent decisions which cause the given subroutine calls. These flags are defined once here for the purpose of simplifying the diagram.

In the first segment,

QCALL is the homogenization option flag which indicates the following steps are to be performed:

if 1, isotope to material to composition.
if 2, material to composition.
if 3, isotope to material.

MSCHI is material fission spectrum flag.
When equal to zero, there is no material set spectrum.
If equal to 1, there is a material set fission spectrum vector.

NUM6 is the DSRN of data set XS.M.ANI.

NUM7 is the DSRN of data set XS.M.AUX.

NUM8 is the DSRN of data set XS.M.MIN.

NUM9 is the DSRN of data set SCR001.

NUM10 is the DSRN of data set SCR002.

NUM11 is the DSRN of data set XS.C.ANI.

IPRINT is an edit flag if zero, all data sets written are edited; if 1, there is no editing done.

In segment MIXMT1,(A),

ISCHI is the isotope set fission flag:

if 0, there is no set fission spectrum.

if >0, the spectrum exists and is read.

NUM4 is the DSRN of the XS.ISO to be read.

NUM5 is the DSRN of the XS.ISO to be written.

NREC is the number of records to be bypassed in reading isotope records.

ICHI is the isotope fission spectrum flag:

if 0, there is no spectrum.

if -1, the set wide spectrum is used.

if 1, the spectrum is a vector.

if NGROUP, the spectrum is a vector.

LIN is the order to inelastic scattering.

LEL is the order of elastic scattering.

LN2N is the order of N2N scattering.

I is the order of scattering being processed.

QCHK is a flag which is equal to 1 when the CHI vector being read is to be compared with a previous vector.

In segment MIXANI,(C),

MLNO equals 1 plus the maximum scattering order for a given material.

In segment MIXMT2,(B),

QCVT is the fission spectrum identifier flag.

When equal to 0, all spectra are identical vectors, when equal to 1, spectrum vectors must be converted to spectrum matrices.

ISCHI is an isotope fission spectrum flag:

When equal to 0 there is no set wide spectrum, when equal to 1, the spectrum is a vector.

MSCHI is a material set fission spectrum flag.

If equal to 0, there is no spectrum.

If equal to 1, the spectrum is a vector.

In segment MIXMT1,(A),

ISCHI is the isotope set fission flag:

if 0, there is no set fission spectrum.

if >0, the spectrum exists and is read.

NUM4 is the DSRN of the XS.ISO to be read.

NUM5 is the DSRN of the XS.ISO to be written.

NREC is the number of records to be bypassed in reading isotope records.

ICHI is the isotope fission spectrum flag:

if 0, there is no spectrum.

if -1, the set wide spectrum is used.

if 1, the spectrum is a vector.

if NGROUP, the spectrum is a matrix.

LIN is the order of inelastic scattering.

LEL is the order of elastic scattering.

LN2N is the order of N2N scattering.

I is the order of scattering being processed.

QCHK is a flag which is equal to 1 when the CHI vector being read is to be compared with a previous vector.

In segment MIXMT2,(B),

QCVT is the fission spectrum identifier flag.

When equal to 0, all spectra are identical vectors; when equal to 1, spectrum vectors must be converted to spectrum matrices.

ISCHI is an isotope fission spectrum flag:

When equal to 0 there is no set wide spectrum; when equal to 1, the spectrum is a vector.

MSCHI is a material set fission spectrum flag.

If equal to 0, there is no spectrum.

If equal to 1, the spectrum is a vector.

L2 is the number of the records to be read past

MCHI is the material fission spectrum flag:

When 0, there is no spectrum.

When -1, the set wide spectrum is used.

When 1, the spectrum is a vector.

When NGROUP, the spectrum is a matrix.

In segment MIXAUX,(D),

L3 is the number of material block records to be bypassed.

QCLNO is the maximum order to anisotropic composition scattering +1.

L is the scattering order being processed.

LINC is the maximum composition inelastic scattering +1.

LELC is the maximum composition elastic scattering +1.

LN2NC is the maximum composition N2N scattering +1.

LINM is the maximum material inelastic scattering +1.

LELM is the maximum material elastic scattering +1.

LN2NM is the maximum material elastic scattering +1.

QEND is a flag equal to 1 if an isotope is the last one used in a material - otherwise equal to 0.

In segment MIXMIN,(E),

QCCHI is a composition fission spectrum flag:

When -1, a set wide spectrum is used.

When 0, there is no spectrum.

When 1, the spectrum is a vector.

When NGROUP, the spectrum is a matrix.

a. Overlay Structure Diagram

```
MAIN
SYSTEM
POINTR
SHIFT
SQUEZE
LOAD
LINK
IBCOM
MIXANI
MIXAUX
MIXMIN
MIXMT1
MIXMT2
HMGROOT
HMGUTIL
```

Subprograms contained in each HOMOG (NUC001) module segment

MIXANI	MIXAUX	MIXMIN	MIXMT1
MIXANI	MIXAUX	MIXMIN	MIXMT1
RDANI	RWAUX	RDMIN	RWISOS
	RDSCT1		RWISO
			RWIXS
			RWUPDN
			RWSBLK
			CHKCHI

MIXMT2	HMGROOT	HMGUTIL
MIXMT2	MAIN	RDSPEC
FRMMTS	HOMOG	ERROUT
RDISO	XSISO	SKPREC
FRMMAT	RWSCT	
FRMSCT	PRNTA8	
RDSCT	BHOMOG	
WRTMIN	XSCANI	
VTOMTX	XSMANI	
	XSCAUX	
	XSMAUX	
	XSCMIN	
	XSMMIN	
	RDCHI	
	FRMCHI	
	BLOCK DATA	
	WCHI	

b. Diagrammatic Subprogram Logic Flow

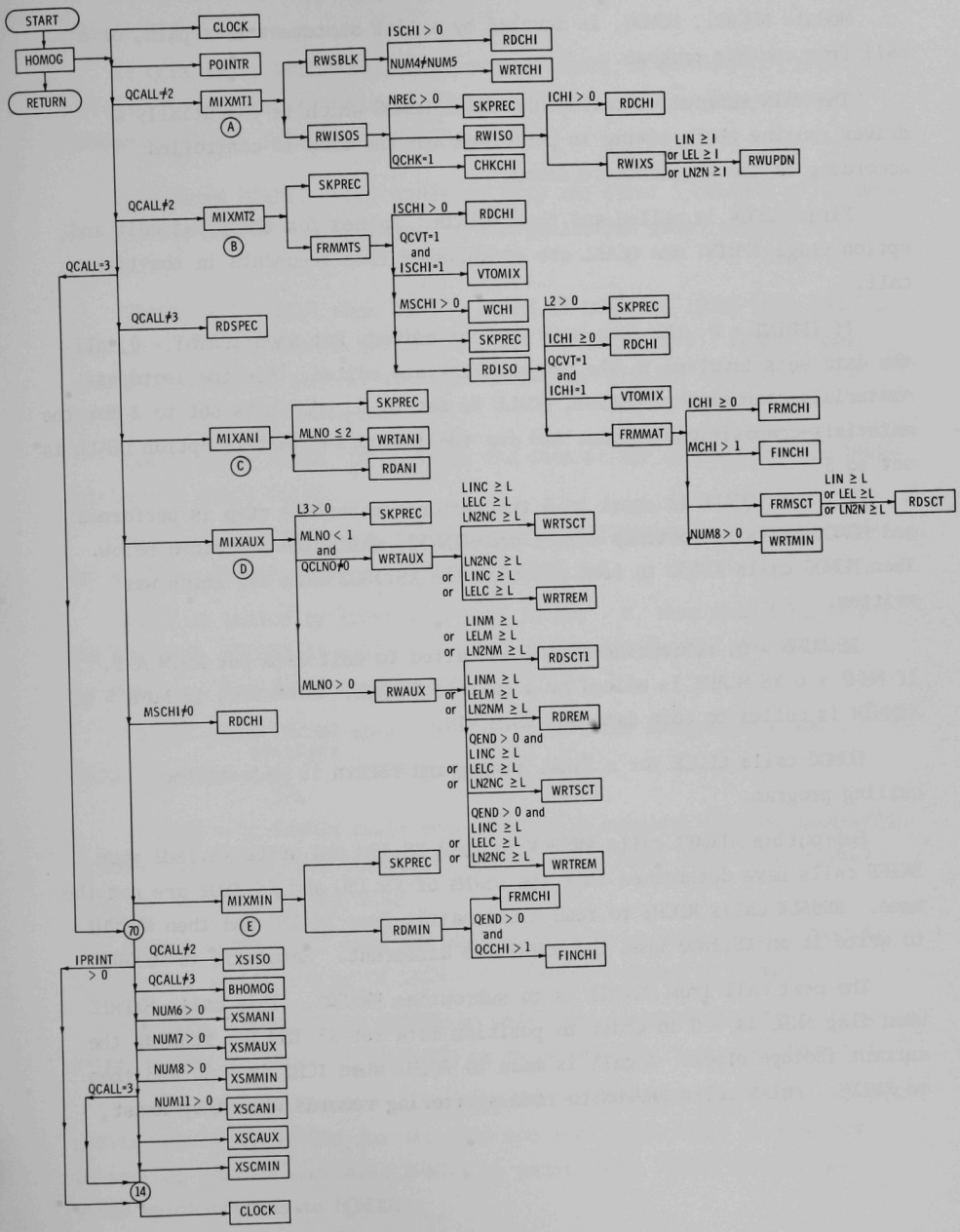

c. Descriptive Subroutine Logic Flow

Module NUC001, HOMOG, is invoked by a link statement in a path, or a call from another program.

The MAIN subroutine calls subroutine HOMOG which is essentially a driver routine where timing is performed and the flow is controlled according to the arguments received.

First CLOCK is called and then POINTR. Values for the print edit and option flags IPRINT and QCALL are established from arguments in the link call.

If IPRINT = 0, the data sets are not edited, but when IPRINT > 0, all the data sets involved in the program flow are edited. For the isotopes →materials→compositions option, QCALL is set to 1. QCALL is set to 2 for the materials→compositions option, and for the isotopes→materials option QCALL is set to 3.

1. When QCALL is equal to 3 the isotopes→materials step is performed and HOMOG calls subroutines MIXMT1 and MIXMT2, which are described below. Then HOMOG calls XSISO to read and edit the XS.ISO2 data set which was written.

If NUM6 > 0, subroutine XSMANI is called to edit data set XS.M.ANI. If NUM7 > 0 XS.M.AUX is edited by a call to XSMAUX. Likewise, if NUM8 > 0, XSMMIN is called to edit data set XS.M.MIN.

HOMOG calls CLOCK for a final timing and return is made to the calling program.

Subroutine MIXMT1 calls RWSBLK to read XS.ISO and write XS.ISO2 when SNIFF calls have determined that the DSRNs of XS.ISO and XS.ISO2 are not the same. RWSBLK calls RDCHI to read a Chi matrix from XS.ISO and then WRTCHI to write it on XS.ISO2 when the DSRNs are different. Return is to MIXMT1.

The next call from MIXMT1 is to subroutine RWISOS. This calls SKPREC when flag NREC is > 0 in order to position data set XS.ISO for reading the current isotope block. A call is made to RDCHI when ICHI is > 0, and then to RWIXS. RWIXS calls RWUPDN to read scattering records when they exist,

i.e., if quantities LIN, LEL, and LN2N which represent the scattering list lengths are ≥ 1.

If QCHK is 1, RWISOS calls subroutine CHKCHI to see whether the current fission spectrum vector agrees with those of previous processed isotopes. RWISOS returns to MIXMT1.

Subroutine MIXMT2 calls SKPREC to skip the first 3 records of XS.ISO2 and then calls FRMMTS to perform the homogenization from isotopes to materials.

FRMMTS calls RDCHI when ISCHI > 0 and if QCVT and ISCHI both equal 1 it calls VTOMTX to form a Chi matrix from the Chi vector. FRMMTS then calls WCHI if MSCHI is > 0, and this writes the fission spectrum vector for the material on XS.M.MIN.

FRMMTS calls SKPREC to position the data at the corrent isotope block and then it calls RDISO.

RDISO calls SKPREC when the data set is not positioned at the record for a given isotope name, i.e. QDLOC(N)-QREC > 0.

RDCHI is called by RDISO when ICHI is not ≥ 0, then when ICHI is = 1 and QCVT = 1, VTOMTX is called by RDISO to convert the Chi vector to a Chi matrix. Then RDISO calls FRMMAT.

FRMMAT calls FRMCHI when ICHI ≥ 0 to form the intermediate sum ZMCHI(J,K) from $\sum_{i=1}^{\text{isotopes}} XFN(J)_i * CHI(J,K)_i$.

If MCHI > 1, FRMMAT calls entry FINCHI to complete the homogenization to form ZMCHI(I,J) from ZMCHI(J,K)/XFISNU(J). FRMMAT then calls FRMSCT once for each scattering order.

FRMSCT calls RDSCT once for each scattering record present, that is if LIN > 0, if LEL > 0 or if LN2N > 0. FRMSCT returns to FRMMAT.

Finally, FRMMAT calls WRTMIN to write the scattering records for a given scattering block if XS.M.MIN is to be written, i.e. when NUM8 > 0.

Subroutine XSISO makes use of a print subroutine, PRNTA8 and its entry points, PRNTA and PRNTI4 for the edit and also calls RWSCT to read the scattering vectors and calls PRNTA8 to print them. RWSCT returns to XSISO which returns to HOMOG.

2. When QCALL is equal to 2 HOMOG calls subroutines RDSPEC, MIXANI, RDCHI, and MIXMIN to perform the materials→composition homogenization step.

These routines are described below.

RDSPEC reads the first record of B.HOMOG and then returns.

MIXANI calls SKPREC to position data set XS.M.ANI for reading a composition block. Then if flag MLNO < 2, WRTANI is called to read the material cross sections from XS.M.ANI and to add them to the composition. If flag QEND is not zero, entry WRTANI writes the current composition cross sections onto XS.C.ANI. WRTANI returns to MIXANI which returns to HOMOG.

HOMOG calls RDCHI when MSCHI $\neq$ 0 to read the CHI fission spectrum record from XS.M.MIN. If QCSCHI is > 0, WRTCHI is called to write this fission spectrum on XS.C.MIN. HOMOG then calls MIXMIN which calls SKPREC to position data set XS.M.MIN at the appropriate material record and then calls RDMIN to read the material block. RDMIN reads the scattering records from XS.M.MIN and then calls FRMCHI when MCHI > 0 or when QCSCHI = 1 to form the intermediate sum ZMCHI(J,K) from ZMCHI in the case of MCHI > 0, or from SETCHI when QCSCHI = 1 from $\sum_{i=1}^{\text{isotopes}} XFN(J)_i * CHI(J,K)_i$. If QEND $\neq$ 0 and QCCHI > 1, entry FINCHI is called and the final sum ZMCHI(J,K) = ZMCHI(JK)/XFISNU(J) is formed. After the group constant records are written XS.C.MIN, RDMIN returns to MIXMIN which returns to HOMOG. CLOCK is again called.

BHOMOG is then called by HOMOG if QCALL $\neq$ 3 to edit the B.HOMOG data which has been written with respect to materials. This is done by calling PRNTA8 and its entries. Return is to BHOMOG.

Then since this is a material→composition step, if IPRINT = 0, one or more of the data sets XS.M.ANI, XS.M.AUX, or XS.M.MIN are edited by calls to the appropriate subroutine XSMANI, XSMAUX, or XSMMIN when the given DSRN is greater than 0. After a final call to CLOCK, return is made to the path.

3. When QCALL = 1, the isotope to material to composition option, the main subroutines are all called in this order: MIXMT1, MIXMT2, MIXANI, MIXAUX, and MIXMIN, and execution is as described above.

The data set edit routines XSISO, and BHOMOG are called and then XSMANI, XSMAUX, XSMMIN, XSCANI, XSCAUX, and XSCMIN, all of which are described above.

Thus the homogenization of isotopes to materials and then to compositions is carried out. HOMOG then returns to the calling path.

4. HOMOG (NUC001) Subprogram Descriptions

This section contains descriptions of all subprograms which are part of the HOMOG (NUC001) module. The descriptions appear in alphabetical order by subprogram name.

Each subprogram description begins with a listing of the calling sequence of the subprogram, and of its entry points, if any. Subsection 1 is a list of the arguments of the subprogram and its entry points, in order of appearance, with the type of each argument, its dimensions in the subprogram if it is an array, and its definition or use. The three types of variables used are I*4, denoting an integer fullword (32 bits); R*4, denoting a floating point fullword, and R*8, denoting a floating point doubleword (64 bits). Variables used as array dimensions are defined either as arguments or as members of common blocks.

Subsection 2 contains the names of all common blocks used by the subprogram. Each is followed by a list of the variables actually used from the common block within the subprogram, together with their types and definitions. The dimensions, if any, follow the variable name in parentheses.

Subsection 3 contains a listing of important variables which are local to the subprogram, in a format like that of subsection 2. Subsection 4 describes the functions performed by the subprogram in terms of the overall purpose of the module.

Subsection 5 lists all subprograms called by this subprogram or any of its entry points; subsection 6 lists the subprograms which call this program or any of its entry points.

Subsection 7 describes error messages which can be generated by this subprogram. These messages are all of the form ERROR NUMBER = nnnnn where nnnnn is explained in the error message list.

More detailed explanations of the contents of common blocks, and of the variable-dimensioned arrays stored in the large container array /ARRAY/, can be found in sections 5 and 6.

Subroutine BHOMOG (NUM, HOLL)

1. Arguments

Name	Type	Dimension	Definition
NUM	I*4	--	DSRN of data set read
HOLL	R*4	--	DS name to be printed

2. Common Blocks

/ARRAY/

Variables used from this common block

Name	Type	Definition
A(10000)	R*8	Large container array
IA(2500)	I*4	A(7501) is equivalanced to AI(1)

3. Local Variables

Name	Type	Definition
I	I*4	Index
L1	I*4	= 2*LTH or length of mix table plus the atomic density table
L2	I*4	= L1+1, lower limit of index in material labels in A
L3	I*4	= L1+N2, upper index of material labels in A
N1	I*4	Length of MSPEC and DMTBL in A equal to number of materials (or compositions)
N2	I*4	Length of DITBL in A, the number of isotopes (or materials)
LTH	I*4	Length of mix table

4. Functions and tasks performed by this subroutine

Edits data set B.HOMOG.

5. Subprograms called by this subroutine

PRNTA (entry in PRNTA8)
PRNTA8
PRNT14 (entry in PRNTA8)

6. Subprograms calling this subroutine

HOMOG

7. Error messages generated by this subroutine - None

Subroutine BLOCK DATA

1. Arguments - None

2. Common Blocks

/ARRAY3/

Variables used from this common block

Name	Type	Definition
DDCTBL	R*8	Contains characters of name 'DCTBL'

/ARRAY1/

Variables used from this common block

Name	Type	Definition
D1(57)	R*8	List of characters defining array names used in module

/DSNAM1/

Variables used from this common block

Name	Type	Definition
D2(15)	R*8	List of characters defining data set names used in module

/ALFNM1/

Variables used from this common block

Name	Type	Definition
DBLANK	R*8	Blank characters
QZERO	I*4	Integer 0 (zero)

3. Local Variables - None

4. Functions and tasks performed by this subroutine

It initializes common variables of compilation time.

5. Subprograms called by this subroutine - None

6. Subprograms calling this subroutine - None

7. Error messages generated by this subroutine - None

Subroutine CHKCHI (CHI1, CHI2)

1. Arguments

Name	Type	Dimension	Definition
CHI1	R*8	NGROUP	Contains the fission spectrum of the current isotope
CHI2	R*8	NGROUP	Contains the fission spectrum of the previously processed isotope

2. Common Blocks

/MISC/

Variables used from this common block

Name	Type	Definition
NGROUP	I*4	Number of energy groups for the cross section set on XS.ISO

/FLAGS/

Variables used from this common block

Name	Type	Definition
QCVT	I*4	Flag: QCVT=0, if all the fission spectrums are identical vectors QCVT=1, if the fission spectrum vectors must be converted to fission spectrum matrices

3. Local Variables

Name	Type	Definition
J	I*4	Index over groups

4. Functions and tasks performed by this subroutine

CHKCHI is called by RWISOS. It checks the current fission spectrum vector against those of previously processed isotopes. If they are not identical, QCVT is set equal to one; otherwise, QCVT is set equal to zero.

5. Subprograms called by this subroutine - None

6. Subprograms calling this subroutine

RWISOS

7. Error messages generated by this subroutine - None

Subroutine ERROUT (NERR)

1. Arguments

Name	Type	Dimension	Definition
NERR	I*4	--	Contains the error number supplied by the calling program

2. Common Blocks - None

3. Local Variables

Name	Type	Definition
I	I*4	Index for printing blank lines

4. Functions and tasks performed by this subroutine

ERROUT is called whenever an error is encountered in any subprogram of module INHOMG or HOMOG. An error number is printed onto the standard output and a call is made to ABEND for an abnormal termination dump.

5. Subprograms called by this subroutine

ABEND (IBM routine)

6. Subprograms calling this subroutine

MIXMT1	FRMMTS	HOMOG
RWISOS	RDISO	RDCHI
RWISO	FRMMAT	MIXANT
RWIXS	FRMSCT	RDANI
RWUPDN	RDSCT	MIXAUX
RWSBLK	MIXMIN	RWAUX
MIXMT2	RDMIN	RDSCT1

7. Error messages generated by this subroutine - None

Subroutine FRMCHI (ZMCHI, CHI, XFN, NGRP)

Entry Points: FINCHI (XFISNU)

1. Arguments

Name	Type	Dimension	Definition
ZMCHI	R*8	NGROUP*NGROUP	Is the homogenized fission factor which is used to form XFISNU
CHI	R*8	NGROUP*NGROUP	Is a given fission spectrum matrix used in forming ZMCHI
XFN	R*8	NGROUP	Is a given $\nu\sigma f$ multiplied by the appropriate factor, which is used to form XFISNU
NGRP	I*4	--	NGROUP
XFISNU	R*8	NGROUP	The homogenized quantity - nu sigma fission

2. Common Blocks

/MISC/

Variables used from this common block

Name	Type	Definition
NGROUP	I*4	Number of energy groups for the cross section set on XS.ISO

3. Local Variables

Name	Type	Definition
J	I*4	Group index
K	I*4	Group index

4. Functions and tasks performed by this subroutine

FRMCHI forms the following intermediate quantities during the homogenization of the fission spectrum matrices:

ZMCHI(J,K) = XFN(J)*CHI(J,K)

FINCHI completes the homogenization of the fission spectrum matrices by dividing the intermediate sum formed in FRMCHI by the homogenized quantity $\nu\sigma_f$ as follows:

ZMCHI(J,K) = ZMCHI(J,K)/XFISNU(J)

5. Subprograms called by this subroutine - None

6. Subprograms calling this subroutine

FRMMAT
RDMIN

7. Error messages generated by this subroutine - None

Subroutine FRMMAT (ZIXS, STR, SCAP, SNALF, SNP, ANISO, PXFISN, ZDNYLD, ZDMCHI, ZDNFRC, XFIS, XFISNU, XFN, ZMCHI, SETCHI, ZICHI, MNUP, MNDN, LNUP, LNDN, XINEL, XEL, XN2N, SINR, SENR, SN2NR, XSCT, ATMDEN, LASCTP, NGRP)

1. Arguments

Name	Type	Dimension	Definition
ZIXS	R*8	LENGTH	Contains the non-scattering cross sections for a given isotope and a given group
STR	R*8	NGROUP	The transport cross section for a given material
SCAP	R*8	NGROUP	The capture (n,γ) cross section for a given material
SNALF	R*8	NGROUP	The capture (n,α) cross section for a given material
SNP	R*8	NGROUP	The capture (n,p) cross section for a given material
ANISO	R*8	NGROUP	The isotropic elastic self-scattering cross section consistent with the anisotropic total cross section
PXFISN	R*8	NGROUP	The prompt fission reaction rate for a given material
ZDNYLD	R*8	NGROUP	The delayed neutron yield for a given isotope
ZDMCHI	R*8	NGROUP*NFAM	The delayed fission spectrum for a given material
ZDNFRC	R*8	NFAM	The fraction of the delayed neutron yield that goes into a given family
XFIS	R*8	NGROUP	The fission cross section for a given material
XFISNU	R*8	NGROUP	The nu times fission cross section for a given material
XFN	R*8	NGROUP	A temporary for the product of the atom density times the isotope cross section

Name	Type	Dimension	Definition
ZMCHI	R*8	MCHI*NGROUP	The fission spectrum for a given material
SETCHI	R*8	ISCHI*NGROUP	The isotope set fission spectrum
ZICHI	R*8	ICHI*NGROUP	The fission spectrum for a given isotope
MNUP	I*4	NGROUP	The number of groups of upscattering for a given material and group
MNDN	I*4	NGROUP	The number of groups of downscattering for a given material and group
LNUP	I*4	MLNO	The number of groups of upscattering for a given material and group
LNDN	I*4	MLNO	The number of groups of downscattering for a given material and group
XINEL	R*8	LASCTP*NGROUP* MLNO	The inelastic scattering cross section for a given material
XEL	R*8	LASCTP*NGROUP* MLNO	The elastic scattering cross section for a given material
XN2N	R*8	LASCTP*NGROUP* MLNO	The N2N scattering cross section for a given material
SINR	R*8	NGROUP	The inelastic removal cross section for a given material
SENR	R*8	NGROUP	The elastic removal cross section for a given material
SN2NR	R*8	NGROUP	The N2N removal cross section for a given material
XSCT	R*8	LASCTP*NGROUP	The total scattering cross section for a given material
ATMDEN	R*8	--	The atom density for a given isotope in a given material
LASCTP	I*4	--	Length of the scattering vector for a given material
NGRP	I*4	--	Equal to NGROUP

2. Common Blocks

/ARRAY/

Variables used from this common block

Name	Type	Definition
A(10000)	R*8	Container array for the variably dimensioned arrays

/ARRAY1/

Variables used from this common block

Name	Type	Definition
DLNDN	R*8	Contains the characters LNDN
DLNUP	R*8	Contains the characters LNUP
DMNDN	R*8	Contains the characters MNDN
DMNUP	R*8	Contains the characters MNUP
DXEL	R*8	Contains the characters XEL
DXINEL	R*8	Contains the characters XINEL
DXN2N	R*8	Contains the characters XN2N

/DSNUM1/

Variables used from this common block

Name	Type	Definition
NUM5	I*4	DSRN of XS.ISO2
NUM6	I*4	DSRN of XS.M.ANI
NUM7	I*4	DSRN of XS.M.AUX
NUM8	I*4	DSRN of XS.M.MIN

/ISO1/

Variables used from this common block

Name	Type	Definition
LEL	I*4	Order of elastic scattering plus one for a given isotope
LIN	I*4	Order of inelastic scattering plus one for a given isotope
LN2N	I*4	Order of N2N scattering plus one for a given isotope
ILNO	I*4	The maximum of LIN, LEL, AND LN2N

/MAT1/

Variables used from this common block

Name	Type	Definition
LASCAT	I*4	The scattering vector length for a given material and scattering order
LSCAT1	I*4	Length of the scattering cross section list for a given material and scattering order written onto XS.M.MIN
LSCAT2	I*4	Length of the scattering cross section list for a given material and scattering order written onto XS.M.AUX
LELM	I*4	Order of elastic scattering plus one for a given material
LINM	I*4	Order of inelastic scattering plus one for a given material
LN2NM	I*4	Order of N2N scattering plus one for a given material
MAXUP	I*4	Maximum number of groups of upscattering for a given material
MLNO	I*4	Maximum order of scattering plus one for a given material

/DELAY1/

Variables used from this common block

Name	Type	Definition
NFAM	I*4	Number of families of delayed neutrons

/FLAGS/

Variables used from this common block

Name	Type	Definition
ICHI	I*4	Isotope fission spectrum flag: ICHI=0, if this isotope has no fission spectrum ICHI=-1, if this isotope uses the set fission spectrum ICHI=1, if this isotope has a fission spectrum vector ICHI=NGROUP, if this isotope has a fission spectrum matrix
MSCHI	I*4	Material set prompt fission spectrum flag: MSCHI=0, if there is no material set fission spectrum MSCHI=1, if the material set fission spectrum is a vector MSCHI=NGROUP if the material set fission spectrum is a matrix
MCHI	I*4	Prompt material fission spectrum flag: MCHI=0, if this material has no fission spectrum MCHI=-1, if this material uses the set fission spectrum MCHI=1, if this material has a fission spectrum vector MCHI=NGROUP, if this material has a fission spectrum matrix
QEND	I*4	Flag: QEND=0, if this is not the last isotope used in this material QEND=1, if this is the last isotope used in this material
QDELAY	I*4	Flag: QDELAY=0, if there are no delayed neutrons QDELAY=1, if there are delayed neutrons

/MISC/

Variables used from this common block

Name	Type	Definition
LENGTH	I*4	Length of the non-scattering cross section record for a given isotope on XS.ISO2
NGROUP	I*4	Number of energy groups for the cross section set on XS.ISO

3. Local Variables

Name	Type	Definition
I	I*4	Reading index
J	I*4	Group index
K	I*4	Index on delayed neutron family. Also index on group for array XSCT
L	I*4	Index of scattering order. Also material index on XINEL, XEL, XN2N
J1	I*4	Group number read from XS.ISO2
L1	I*4	LNUP(L), the length of upscattering vector for a given group and scattering order of an isotope
L2	I*4	L1+1 number of upscattering groups + 1
L3	I*4	=MAXUP+1-J=index on XINEL, XEL, and XN2N read from XS.ISO2
L4	I*4	MAXUP-L1
L5	I*4	=L6+K=index on XINEL, XEL, and XN2N. Also lower limit of index K in scattering lists XINEL, XEL, XN2N, on XS.M.AUX. Also index on order of total anisotropic cross section XSCT on XS.M.ANI

Name	Type	Definition
L6	I*4	=MAXUP-MINUP(J)=order of upscattering for group J. Also =L4+LSCAT2=upper limit on index K in scattering lists XINEL, XEL, XN2N, on XS.M.AUX
XA	R*8	The absorption cross section for a given material and group
XREM	R*8	The removal cross section for a given material and group
XTOT	R*8	The total cross section for a given material and group

4. Functions and tasks performed by this subroutine

FRMMAT adds the current isotope to the current material. It is called by RDISO.

The non-scattering cross sections of the current isotope are read from XS.ISO2 and added to the current material. If QDELAY=1, then the material delayed neutron data is formed. If the fission spectrum is a matrix, then FRMCHI is called to homogenize the fission spectrum. If the maximum scattering order, ILNO, is > 0, then FRMSCT is called to homogenize the scattering cross sections. If QEND=1, then the material cross sections are written onto the material specification records of data set XS.C.AUX, and the material description records of data set XS.C.MIN.

5. Subprograms called by this subroutine

IGET (entry in POINTR)
ERROUT
FINCHI (entry in FRMCHI)
FRMCHI
FRMSCT
WRTMIN

6. Subprograms calling this subroutine

RDISO

7. Error messages generated by this subroutine

1001 - Group number just read from XS.ISO2 does not match the current group number.

21001 - Unexpected end of file on data set XS.ISO2.

31001 - Parity error on data set XS.ISO2.

Subroutine FRMMTS (DINAM, ILOC, MSPEC, DIMIX, ATMDEN, DDINAM, QDLOC)

1. Arguments

Name	Type	Dimension	Definition
DINAM	R*8	NISO	Contains the names of all the isotopes on XS.ISO
ILOC	I*4	NISO	Contains the number of records to skip from the beginning of the second file of XS.ISO to access a given isotope record
MSPEC	I*4	NMAT	Contains the number of isotopes used to define a given material
DIMIX	R*8	MSCTH	Contains all the names of isotopes used in defining all the materials
ATMDEN	R*8	MSLTH	Contains the atom densities of isotopes in a given material
DDINAM	R*8	NFISO	Contains the names of the isotopes on data set XS.DELAY
QDLOC	I*4	NFISO	Contains the number of records to skip from the beginning of the second file of XS.DELAY to access a given isotope

2. Common Blocks

/ARRAY/

Variables used from this common block

Name	Type	Definition
A(10000)	R*8	Container array for the variably dimensioned arrays

/QREC/

Variables used from this common block

Name	Type	Definition
QREC	I*4	The number of the record at which data set XS.DELAY is currently positioned

/ARRAY1/

Variables used from this common block

Name	Type	Definition
DANISO	R*8	Contains the characters ANISO
DLNDN	R*8	Contains the characters LNDN
DLNUP	R*8	Contains the characters LNUP
DMNDN	R*8	Contains the characters MNDN
DMNUP	R*8	Contains the characters MNUP
DPXFIS	R*8	Contains the characters PXFISN
DSCAP	R*8	Contains the characters SCAP
DSETCH	R*8	Contains the characters SETCHI
DSNALF	R*8	Contains the characters SNALF
DSNP	R*8	Contains the characters SNP
DSTR	R*8	Contains the characters STR
DXEL	R*8	Contains the characters XEL

Name	Type	Definition
DXFIS	R*8	Contains the characters XFIS
DXFISN	R*8	Contains the characters XFISNU
DXINEL	R*8	Contains the characters XINEL
DXN2N	R*8	Contains the characters XN2N
DZDMCH	R*8	Contains the characters ZDMCHI
DZDNFR	R*8	Contains the characters ZDNFRC
DZDNYL	R*8	Contains the characters ZDNYLD
DZICHI	R*8	Contains the characters ZICHI
DZMCHI	R*8	Contains the characters ZMCHI

/DSNUM1/

Variables used from this common block

Name	Type	Definition
NUM3	I*4	DSRN of XS.DELAY
NUM5	I*4	DSRN of XS.ISO2
NUM6	I*4	DSRN of XS.M.ANI
NUM7	I*4	DSRN of XS.M.AUX
NUM8	I*4	DSRN of XS.M.MIN
NUM10	I*4	DSRN of SCR002

/ISO1/

Variables used from this common block

Name	Type	Definition
NISO2	I*4	Number of isotopes on data set XS.ISO2

/MAT1/

Variables used from this common block

Name	Type	Definition
LASCAT	I*4	The scattering vector length for a given material and order
LELM	I*4	Order of elastic scattering plus one for a given material
LINM	I*4	Order of inelastic scattering plus one for a given material
LN2NM	I*4	Order of N2N scattering plus one for a given material
MAXUP	I*4	Maximum number of groups of upscattering for a given material
MLNO	I*4	Maximum order of scattering plus one for a given material
NMAT	I*4	Number of materials on the material data set

/DELAY1/

Variables used from this common block

Name	Type	Definition
NFISO	I*4	Number of fissionable isotopes with delayed neutrons

/FLAGS/

Variables used from this common block

Name	Type	Definition
ISCHI	I*4	Isotope set fission spectrum flag: ISCHI=0, if there is no isotope set fission spectrum ISCHI=1, if the isotope set fission spectrum is a vector ISCHI=NGROUP, if the isotope set fission spectrum is a matrix

Name	Type	Definition
MSCHI	I*4	Material set prompt fission spectrum flag: MSCHI=0, if there is no material set fission spectrum MSCHI=1, if the material set fission spectrum is a vector MSCHI=NGROUP, if the material set fission flag is a matrix
MCHI	I*4	Prompt material fission spectrum flag: MCHI=0, if this material has no fission spectrum MCHI=-1, if this material used the set fission spectrum MCHI=1, if this material has a fission spectrum vector MCHI=NGROUP, if this material has a fission spectrum matrix
QCVT	I*4	Flag: QCVT=0, if all the fission spectrums are identical vectors QCVT=1, if the fission spectrum vectors must be converted to fission spectrum matrices
QEND	I*4	Flag: QEND=0, if this is not the last isotope used in this material QEND=1, if this is the last isotope used in this material

/MISC/

Variables used from this common block

Name	Type	Definition
NGROUP	I*4	Number of energy groups for the cross section set on XS.ISO

3. Local Variables

Name	Type	Definition
I	I*4	Index
K	I*4	Index
N	I*4	Index on materials

Name	Type	Definition
L1	I*4	Pointer for CHI array and index in the mixture array
L2	I*4	End pointer for CHI array and index in the mixture array
L3	I*4	Record number at which XS.ISO is currently positioned
L5	I*4	Number of records in first file to be skipped
L6	I*4	Counter for number of isotopes in material
NREC	I*4	Number of records to be skipped to get to isotope

4. Functions and tasks performed by this subroutine

FRMMTS sets up the material loop for the homogenization of isotopes to materials. It is called by MIXMT2.

If NUM3 > 0, the reading of the first file of XS.DELAY is completed. If there is a set fission spectrum, RDCHI is called to read it from XS.ISO2. If QCVT=1, and the set fission spectrum is a vector, then VTOMTX is called to convert the vector to a matrix. If there is a material set fission spectrum, WRTCHI is called to write it onto XS.M.MIN.

CLEAR is called to zero out the arrays STR, SCAP, SNALF, SNP, ANISO, MNUP, MNDN, LNUP, LNDN, XINEL, XEL, XN2N, PXFISN, ZDMCHI, XFIS, and XFISNU. The material data written onto data set SCR002 by RWISOS is read for each material. RDISO is called to read XS.ISO2.

5. Subprograms called by this subroutine

IGET (entry in POINTR)
CLEAR (entry in POINTR)
RDCHI
RDISO
ERROUT
SKPREC
VTOMTX
WCHI

6. Subprograms calling this subroutine

MIXMT2

7. Error messages generated by this subroutine

20801 - Unexpected end of file on data set XS.DELAY.

20802 - Unexpected end of file on data set SCR002.

20804 - Unexpected end of file on data set XS.ISO2.

20851 - Expected end of file not encountered on data set XS.ISO2.

20852 - Expected end of file not encountered on data set XS.ISO2.

20853 - Expected end of file not encountered on data set XS.DELAY.

30801 - Parity error on data set XS.DELAY.

30802 - Parity error on data set SCR002.

30804 - Parity error on data set XS.ISO2.

30851 - Parity error on data set XS.ISO2.

30852 - Parity error on data set XS.ISO2.

Subroutine FRMSCT (MNUP, MNDN, LNUP, LNDN, XINEL, XEL, XN2N, LASCTP, NGRP, L, ATMDEN)

1. Arguments

Name	Type	Dimension	Definition
MNUP	I*4	NGROUP	The number of groups of upscattering for a given material and group
MNDN	I*4	NGROUP	The number of groups of downscattering for a given material and group
LNUP	I*4	MLNO	The number of groups of upscattering for a given material and group
LNDN	I*4	MLNO	The number of groups of downscattering for a given material and group
XINEL	R*8	LASCTP*NGROUP *MLNO	The inelastic scattering cross section for a given material
XEL	R*8	LASCTP*NGROUP *MLNO	The elastic scattering cross section for a given material
XN2N	R*8	LASCTP*NGROUP *MLNO	The N2N scattering cross section for a given material
LASCTP	I*4	--	Length of the scattering vector for a given material
NGRP	I*4	--	Equal to NGROUP
L	I*4	--	Current order for this material
ATMDEN	R*8	--	The atom density for a given isotope in a given material

2. Common Blocks

/ARRAY/

Variables used from this common block

Name	Type	Definition
A(10000)	R*8	Container array for the variably dimensioned arrays

/ARRAY1/

Variables used from this common block

Name	Type	Definition
DVV1	R*8	Contains the characters VV1

/DSNUM1/

Variables used from this common block

Name	Type	Definition
NUM5	I*4	DSRN of XS.ISO2

/ISO1/

Variables used from this common block

Name	Type	Definition
LEL	I*4	Order of elastic scattering plus one for a given isotope
LIN	I*4	Order of inelastic scattering plus one for a given isotope
LN2N	I*4	Order of N2N scattering plus one for a given isotope
LELUP	I*4	Number of groups of elastic upscattering for a given isotope, order and group
LELDN	I*4	Number of groups of elastic downscattering for a given isotope, order and group
LINUP	I*4	Number of groups of inelastic upscattering for a given isotope, order and group
LINDN	I*4	Number of groups of inelastic downscattering for a given isotope, order and group
LN2NUP	I*4	Number of groups of N2N upscattering for a given isotope, order and group
LN2NDN	I*4	Number of groups of N2N downscattering for a given isotope, order and group

/MAT1/

Variables used from this common block

Name	Type	Definition
MAXUP	I*4	Maximum number of groups of upscattering for this material

/MISC/

Variables used from this common block

Name	Type	Definition
NGROUP	I*4	Number of energy groups for the cross section set on XS.ISO
IVV1	I*4	The pointer for the variably dimensioned array VV1

3. Local Variables

Name	Type	Definition
J	I*4	Group index

4. Functions and tasks performed by this subroutine

FRMSCT is called by FRMMAT to initialize the homogenization of the scattering cross sections from isotopes to materials.

The number of groups of upscattering and downscattering in the scattering description records of XS.ISO2 is read. RDSCT is called to read the scattering records.

5. Subprograms called by this subroutine

IGET (entry in POINTR)
RDSCT
ERROUT

6. Subprograms calling this subroutine

FRMMAT

7. Error messages generated by this subroutine

21101 - Unexpected end of file on data set XS.ISO2.

31101 - Parity error on data set XS.ISO2.

Subroutine HOMOG (ICALL, N1, N2, N3, N4)

1. Arguments

Name	Type	Dimension	Definition
ICALL	I*4	--	Flag to indicate type of homogenization desired and printout desired =1 Isotope→material→composition with printout =4 Same without printout =2 Material→composition with printout =8 Same without printout =3 Isotope→material with printout =12 Same without printout
N1	I*4	--	DSRN of data set B.HOMOG
N2	I*4	--	DSRN of data set XS.M.ANI
N3	I*4	--	DSRN of data set XS.M.AUX
N4	I*4	--	DSRN of data set XS.M.MIN

2. Common Blocks

/ARRAY/

Variables used from this common block

Name	Type	Definition
A(10000)	R*8	Container array for the variably dimensioned arrays

/ARRAY3/

Variables used from this common block

Name	Type	Definition
DDCTBL	R*8	Contains the characters DCTBL

/MSIZE/

Variables used from this common block

Name	Type	Definition
MAXSIZ	I*4	Maximum size of the container array A

/ARRAY1/

Variables used from this common block

Name	Type	Definition
DCHI	R*8	Contains the characters CHI
DCSCAT	R*8	Contains the characters CSCAT
DDMTBL	R*8	Contains the characters DMTBL
DDMMIX	R*8	Contains the characters DMMIX
DNDN	R*8	Contains the characters NDN
DNUP	R*8	Contains the characters NUP
DPXFN	R*8	Contains the characters PXFN
DQCSPE	R*8	Contains the characters QCSPEC
DREM	R*8	Contains the characters REM
DSCAP	R*8	Contains the characters SCAP
DSCAT	R*8	Contains the characters SCAT
DSETCH	R*8	Contains the characters SETCHI
DSNALF	R*8	Contains the characters SNALF
DSNP	R*8	Contains the characters SNP

Name	Type	Definition
DSTR	R*8	Contains the characters STR
DVV1	R*8	Contains the characters VV1
DVOLFR	R*8	Contains the characters VOLFRC
DXA	R*8	Contains the characters XA
DXEL	R*8	Contains the characters XEL
DSFIS	R*8	Contains the characters XFIS
DXFISN	R*8	Contains the characters XFISNU
DXFN	R*8	Contains the characters XFN
DXINEL	R*8	Contains the characters XINEL
DXN2N	R*8	Contains the characters XN2N
DXREM	R*8	Contains the characters XREM
DXTER	R*8	Contains the characters XTER
DXTIR	R*8	Contains the characters XTIR
DXTN2N	R*8	Contains the characters XTN2NR
DXTOT	R*8	Contains the characters XTOT
DZDNCH	R*8	Contains the characters ZDNCHI
DZMCHI	R*8	Contains the characters ZDMCHI

/DSNAM1/

Variables used from this common block

Name	Type	Definition
DNAM6	R*8	Contains the characters XS.M.ANI
DNAM7	R*8	Contains the characters XS.M.AUX
DNAM8	R*8	Contains the characters XS.M.MIN
DNAM11	R*8	Contains the characters XS.C.ANI

Name	Type	Definition
DNAM12	R*8	Contains the characters XS.C.AUX
DNAM13	R*8	Contains the characters XS.C.MIN
DNAM14	R*8	Contains the characters XS.C.AN1
DNAM15	R*8	Contains the characters XS.C.AU1
DNAM16	R*8	Contains the characters XS.C.MI1

/DSNUM1/

Variables used from this common block

Name	Type	Definition
NUM2	I*4	Data set reference number (DSRN) of B.HOMOG
NUM5	I*4	DSRN of XS.ISO2
NUM6	I*4	DSRN of XS.M.ANI
NUM7	I*4	DSRN of XS.M.AUX
NUM8	I*4	DSRN of XS.M.MIN
NUM9	I*4	DSRN of SCR001
NUM10	I*4	DSRN of SCR002
NUM11	I*4	DSRN of XS.C.ANI or XS.C.AN1
NUM12	I*4	DSRN of XS.C.AUX or XS.C.AU1
NUM13	I*4	DSRN of XS.C.MIN or XS.C.MI1

/MAT1/

Variables used from this common block

Name	Type	Definition
MAXLNO	I*4	Equal to the maximum order of scattering plus one for the materials on the material data sets

Name	Type	Definition
MAXSCT	I*4	Equal to MAXUPG plus MAXDNG plus one
NMAT	I*4	Number of materials on the material data set
NFMAT	I*4	Number of fissionable materials on XS.M.MIN
NUMANI	I*4	Number of materials with anisotropic scattering on data set XS.M.ANI

/MAT2/

Variables used from this common block

Name	Type	Definition
QANI	I*4	Flag set to the DSRN of XS.M.ANI, equal to N2: QANI=0, XS.M.ANI is not formed QANI≠0, XS.M.ANI is formed
QAUX	I*4	Flag set to the DSRN of XS.M.AUX, equal to N3: QAUX=0, XS.M.AUX is not formed QAUX≠0, XS.M.AUX is formed
QMIN	I*4	Flag set to the DSRN of XS.M.MIN, equal to N4: QMIN=0, no XS.M.MIN is formed QMIN≠0, XS.M.MIN is formed

/COMP1/

Variables used from this common block

Name	Type	Definition
NCMP	I*4	Number of composition names in the array DCTBL
QCSLTH	I*4	Number of material names in the array DMMIX

/DELAY1/

Variables used from this common block

Name	Type	Definition
NFAM	I*4	Number of families of delayed neutrons

/ALFNM1/

Variables used from this common block

Name	Type	Definition
QZERO	I*4	Contains the integer 0

/FLAGS/

Variables used from this common block

Name	Type	Definition
MSCHI	I*4	Material set prompt fission spectrum flag: MSCHI=0, if there is no material set fission spectrum MSCHI=1, if the material set fission spectrum is a vector MSCHI=NGROUP, if the material set fission spectrum is a matrix
QCSCHI	I*4	Composition set prompt fission spectrum flag: QCSCHI=0, if there is no composition set fission spectrum QCSCHI=1, if the composition set fission spectrum is a vector QCSCHI=NGROUP, if the composition set fission spectrum is a matrix

/MISC/

Variables used from this common block

Name	Type	Definition
NGROUP	I*4	Number of energy groups for the cross section set on XS.ISO
LSTLOC	I*4	Last used location of the container array A

/MISC2/

Variables used from this common block

Name	Type	Definition
MAXUPG	I*4	Maximum number of groups of upscattering on the material data sets
MAXDNG	I*4	Maximum number of groups of dowscattering on the material data sets

/HMGTIM/

Variables used from this common block

Name	Type	Definition
TIME1	R*4	Initial time used to calculate the execution time in entire module
TIME2	R*4	The earlier time used to calculate the execution time in a module substep or segment
TIME3	R*4	The later time used to calculate the execution time in a module substep or segment

3. Local Variables

Name	Type	Definition
I	I*4	Heading index
L1	I*4	Temporary storage locations
L2	I*4	Temporary storage locations
L3	I*4	Temporary storage locations
N6	I*4	POINTER argument used to determine if N2 is the DSRN of data set XS.M.ANI or XS.M.AN1
N7	I*4	POINTER argument used to determine if N3 is the DSRN of data set XS.M.AUX or XS.M.AU1

Name	Type	Definition
N8	I*4	POINTER argument used to determine if N4 is the DSRN of data set XS.M.MIN or XS.M.MI1
NMAT2	I*4	Number of materials specified on data set B.HOMOG
QCALL	I*4	Option flag: QCALL=1, Isotopes→Materials→Compositions Option QCALL=2, Materials→Compsotions Option QCALL=3, Isotopes→Materials Option
IPRINT	I*4	Print flag: IPRINT≠0, do not edit data sets IPRINT=0, edit all data sets used by HOMOG

4. Functions and tasks performed by this subroutine

HOMOG is the main driver for the module HOMOG and is called from a path or program which requires it.

The following operations are performed:

(1) CLOCK is called to get the initial time.

(2) IPRINT is set equal to ICALL/4.

(3) If IPRINT 0, then QCALL is set equal to IPRINT; otherwise, QCALL is set equal to ICALL.

(4) POINTR is called for initialization.

A. Isotopes→Materials Step

1. QANI, QAUX and QMIN are set equal to N2, N3 and N4, respectively.
2. NUM6, NUM7, NUM8, NUM9, NUM10, NUM11, NUM12 and NUM13 are initialized to zero.
3. MIXMT1 is called to execute Substep 1 of the Isotopes→Materials Step.
4. The execution time for Substep 1 is printed onto the standard output.
5. MIXMT2 is called to execute Substep 2 of the Isotopes→Materials
6. The execution time for Substep 2 is printed onto the standard output.

B. POINTR is called for initialization.

C. Materials→Composition Step

1. The first composition specifications record is read from B.HOMOG.
2. PUTPNT is called to set up the pointers for the variable dimensioned arrays DMMIX, VOLFRC, QCSPEC and DCTBL.
3. RDSPEC is called to read the second composition specifications record.
4. If NUM6>0, then the following is done:
   a. The first record of X.M.ANI is read.
   b. PUTPNT is called to set up the pointers for the variably dimensioned arrays DMTBL, SCAT and CSCAT.
   c. MIXANI is called to homogenize material cross sections from XS.M.ANI to composition cross sections onto XS.C.ANI or XS.C.AN1.
   d. The execution time for this Substep is printed onto the standard output.
5. If NUM7>0, then the following is done:
   a. The first record of XS.M.AUX is read.
   b. PUTPNT is called to set up the pointers for the variably dimensioned arrays DMTBL, SCAP, SNALF, SNP, VV1, REM, XTER, XTN2N, XINEL, XEL, XN2N and SCAT.
   c. MIXAUX is called to homogenize material cross sections from XS.M.AUX to composition cross sections and to write the composition cross sections onto XS.C.AUX or XS.C.AU1
   d. The execution time for this Substep is printed onto the standard output
6. If NUM8>0, then the following is done:
   a. The first record of XS.M.MIN is read.
   b. PUTPNT is called to set up the pointers for the variably dimensioned arrays DMTBL, SETCHI, VV1, QCSCAT, NUP, NDN, XA, XTOT, XREM, STR, ZMCHI, CHI, XFIS, XFISNU, XIN, SCAT, PXFN and ZDNCHI.

c. If there is a material set fission spectrum record, this record is read from XS.M.MIN and written as the first record of the second file of XS.C.MIN or XS.C.MI1.

d. MIXMIN is called to homogenize material cross sections from XS.M.MIN to composition cross sections and to write the composition cross sections onto XS.C.MIN or XSC.MI1.

e. The execution time for this Substep is printed onto the standard output.

(5) If QCALL=2, then the following is done:

A. NUM2, NUM6, NUM7, and NUM8 are set equal to N1, N2, N3 and N4, respectively.

B. The Materials→Compositions Step as described for QCALL=1 (see paragraph (5)C. above) is executed.

(6) If QCALL=3, then the Isotopes→Materials Step as described for QCALL=1 (see paragraph (5)A. above) is executed.

(7) If IPRINT>0, then all the data sets used by module HOMOG are edited and the edited data is written onto the standard output.

(8) Finally, the total execution time for module HOMOG is printed onto the standard output.

Note: A distinction is made here between XS.C.MIN and XS.C.MI1, in order to avoid over-writing an old XS.C.MIN data set. The same is true of XS.C.AUX and XS.C.AU1, and of XS.C.ANI and XS.C.AN1. Throughout the other subroutines this distinction is transparent. The data sets are written on the DSRNS supplied by the NUC001 module arguments which are handled by the calling path or program.

5. Subprograms called by this subroutine

IGET (entry in POINTR)	MIXMT2
PURGE (entry in POINTR)	POINTR (ARC system module)
CLOCK (IBM routine)	PUTPNT (entry in POINTR)
RDCHI	RDSPEC
SNIFF	WIPOUT
XSISO	WRTCHI (entry in RDCHI)
BHOMOG	XSCANI
ERROUT	XSCAUX
MIXANI	XSCMIN
MIXAUX	XSMANI
MIXMIN	XSMAUX
MIXMT1	XSMMIN

6. Subprograms calling this subroutine

MAIN

7. Error messages generated by this subroutine

1 - Data Set B.HOMOG is missing.

2 - The container array has overflowed.

5 - The container array has overflowed.

6 - The container array has overflowed.

7 - The materials→compositions option was specified but no material data sets were supplied.

20001 - Unexpected end of file on data set B.HOMOG.

20002 - Unexpected end of file on data set XS.M.ANI.

20003 - Unexpected end of file on data set XS.M.AUX.

20004 - Unexpected end of file on data set XS.M.MIN.

30001 - Parity errors on data set B.HOMOG.

30002 - Parity errors on data set XS.M.ANI.

30003 - Parity errors on data set XS.M.AUX.

30004 - Parity errors on data set XS.M.MIN

Main Program MAIN

1. Arguments - None

2. Common Blocks - None

3. Local Variables - None

4. Functions and tasks performed by this program

   This program provides entry into the module and calls the module driver.

5. Subprograms called by this program

   HOMOG

6. Programs calling this program

   ARC system standard paths and other ARC system modules

7. Error messages generated by this program - None

Subroutine MIXANI (DMMIX, VOLFRC, QCSPEC, DMTBL, SCAT, CSCAT, DCTBL)

1. Arguments

Name	Type	Dimension	Definition
DMMIX	R*8	QCSLTH	Contains all the names of the materials used in defining the compositions
VOLFRC	R*8	QCSCTH	Contains the volume fractions of materials in compositions

Name	Type	Dimension	Definition
QCSPEC	I*4	NCMP	Contains the number of materials used to define a given composition
DMTBL	R*8	NMAT	Contains all the distinct names of the materials used in defining the compositions
SCAT	R*8	LASCAT*NGROUP	Contains the anisotropic scattering cross sections for a given material and order
CSCAT	R*8	LASCT1*NGROUP	Contains the anisotropic scattering cross sections for a given composition and order
DCTBL	R*8	NCMP	Contains the distinct names of the compositions

2. Common Blocks

/ARRAY1/

Variables used from this common block

Name	Type	Definition
DCSCAT	R*8	Contains the characters CSCAT
DSCAT	R*8	Contains the characters SCAT

/MISC/

Variables used from this common block

Name	Type	Definition
NGROUP	I*4	Number of energy groups for the cross section set on XS.ISO

/MAT1/

Variables used from this common block

Name	Type	Definition
LASCAT	I*4	The scattering vector length for a given material and order
MAXUP	I*4	Maximum number of groups of upscattering for a given material
MAXDN	I*4	Maximum number of groups of downscattering for a given material
MLNO	I*4	Maximum order of scattering plus one for a given material
MAXLNO	I*4	Equal to the maximum order of scattering plus one for the materials on the material data sets
MAXSCT	I*4	Equal to MAXUPG plus MAXDNG plus one
NMAT	I*4	Number of materials on the material data set

/FLAGS/

Variables used from this common block

Name	Type	Definition
QEND	I*4	Flag: QEND=0, if this is not the last isotope used in this material QEND=1, if this is the last isotope used in this material

/DSNUM1/

Variables used from this common block

Name	Type	Definition
NUM6	I*4	DSRN of XS.M.ANI
NUM11	I*4	DSRN of XS.C.ANI

/COMP1/

Variables used from this common block

Name	Type	Definition
LASCT1	I*4	Length of the scattering vector for a given anisotropic composition
MAXUP1	I*4	Maximum number of groups of upscattering for the anisotropic compositions
NCMP	I*4	Number of composition names in the array DCTBL
NUMAN1	I*4	Number of anisotropic compositions on XS.C.ANI
QCLNO	I*4	Maximum order of scattering plus one for the anisotropic compositions

3. Local Variables

Name	Type	Definition
I	I*4	Composition index on DMMIX
K	I*4	Material index on DMTBL
M	I*4	Record index for a given material record
N	I*4	Composition index on QCSPEC
K1	I*4	Temporary, initially zero used to form MAXO(K1,MAXUP) which is MAXUPS in XS.C.ANI
K2	I*4	Temporary, initially zero used to form MAXO(K2,MAXUP) which is MAXDNS in XS.C.AN1
L1	I*4	Lower limit of composition index on DMMIX
L2	I*4	Upper limit of composition index on DMMIX
L3	I*4	=K-1, material number minus 1

Name	Type	Definition
L4	I*4	Temporary used to read scattering order of material in material block on XS.M.ANI
QREC	I*4	Record number at which XS.M.ANI is currently positioned
MAXLN1	I*4	Maximum order of scattering plus one for the compositions on XS.C.ANI

4. Functions and tasks performed by this subroutine

MIXANI is called by HOMOG to form composition cross sections from the material cross sections on XS.M.ANI.

XS.M.ANI is positioned at the first record of the material to be read. RDANI is called to read the material records. If QEND=1, then the composition records are written onto XS.C.MIN by WRTANI.

5. Subprograms called by this subroutine

CLEAR (entry in POINTR)
RDANI
ERROUT
SKPREC
WIPOUT (entry in POINTR)
WRTANI (entry in RDANI)

6. Subprograms calling this subroutine

HOMOG

7. Error messages generated by this subroutine

2101 - Requested material name does not exist on data set XS.M.ANI.

22101 - Unexpected end of file on data set XS.M.ANI.

22102 - Unexpected end of file on data set XS.M.ANI.

22103 - Unexpected end of file on data set XS.M.ANI.

22104 - Unexpected end of file on data set XS.M.ANI

32101 - Parity error on data set XS.M.ANI.

32102 - Parity error on data set XS.M.ANI.

32103 - Parity error on data set XS.M.ANI.

32104 - Parity error on data set XS.M.ANI.

Subroutine MIXAUX (DMMIX, VOLFRC, QCSPEC, DMTBL, SCAT, SCAR, SNALF, SNP, VV1, XTIR, XTER, XTN2NR, REM, XINEL, XEL, XN2N, NGRP, DCTBL)

1. Arguments

Name	Type	Dimension	Definition
DDMIX	R*8	MCSLTH	Mix table in record type 4 of B.HOMOG. Contains material names used to define given compositions
VOLFRC	R*8	QCSCTH	Contains the volume fractions of materials used to define a given composition
QCSPEC	I*4	NCMP	Contains the number of materials used to define a given composition
DMTBL	R*8	NMAT	The distinct material names which are contained in array DMMIX
SCAT	R*8	LSCAT*NGROUP	The scattering cross section for a given material and order on XS.M.AUX
SCAP	R*8	NGROUP	Is the (n,γ) capture cross section for a given composition
SNALF	R*8	NGROUP	Is the (n,α) capture cross section for a given composition
SNP	R*8	NGROUP	Is the (n,ρ) capture cross section for a given composition
VV1	R*8	NGROUP*3	Used as a buffer into which the capture cross sections on XS.M.AUX are read

Name	Type	Dimension	Definition
XTIR	R*8	NGROUP	The total inelastic removal cross section for a given composition and order
XTER	R*8	NGROUP	The total elastic removal cross section for a given composition and order
XTN2NR	R*8	NGROUP	The total N2N removal cross section for a given composition and order
REM	R*8	NGROUP	The removal cross section for a given material order and type on XS.M.AUX
XINEL	R*8	LASCTP*NGROUP *MLNO	The inelastic scattering cross section for given material
XEL	R*8	NASCTP*NGROUP *MLNO	The elastic scattering cross section for a given material
XN2N	R*8	LASCTP*NGROUP *MLNO	The N2N scattering cross section for a given material
NGRP	I*4	--	Equal to NGROUP
DCTBL	R*8	--	The distinct composition labels used with CNAME(I) in XS.C.AUX

2. Common Blocks

/ARRAY1/

Variables used from this common block

Name	Type	Definition
DREM	R*8	Contains the characters REM
DSCAP	R*8	Contains the characters SCAP
DSCAT	R*8	Contains the characters SCAT
DSNALF	R*8	Contains the characters SNALF

Name	Type	Definition
DSNP	R*8	Contains the characters SNP
DVV1	R*8	Contains the characters VV1
DXEL	R*8	Contains the characters XEL
DXINEL	R*8	Contains the characters XINEL
DXN2N	R*8	Contains the characters XN2N
DXTER	R*8	Contains the characters XTER
DXTIR	R*8	Contains the characters XTIR
DXTN2N	R*8	Contains the characters XTN2NR

/DSNUM1/

Variables used from this common block

Name	Type	Definition
NUM7	I*4	DSRN of XS.M.AUX
NUM12	I*4	DSRN of XS.C.AUX

/MAT1/

Variables used from this common block

Name	Type	Definition
LELM	I*4	Order of elastic scattering plus one for a given material
LINM	I*4	Order of inelastic scattering plus one for a given material
LN2NM	I*4	Order of N2N scattering plus one for a given material
MAXUP	I*4	Maximum number of groups of upscattering for a given material

Name	Type	Definition
MAXDN	I*4	Maximum number of groups of downscattering for a given material
MLNO	I*4	Maximum order of scattering plus one for a given material
MAXLNO	I*4	Equal to the maximum order of scattering plus one for the materials on the material data set
NMAT	I*4	Number of materials on the material data set

/COMP1/

Variables used from this common block

Name	Type	Definition
LELC	I*4	Maximum order plus one of the elastic scattering cross sections for a given composition on XS.C.AUX
LINC	I*4	Maximum order plus one of the inelastic scattering cross sections for a given composition on XS.C.AUX
LN2NC	I*4	Maximum order plus one of the N2N scattering cross sections for a given composition on XS.C.AUX
LSCT1	I*4	Length of the scattering cross section vector for a given composition on XS.C.AUX
NCMP	I*4	Number of composition names in the array DCTBL
NUP1	I*4	The number of groups of upscattering for a given composition on XS.C.AUX
QCLNO	I*4	Maximum order of scattering plus one for the anisotropic compositions

/FLAGS/

Variables used from this common block

Name	Type	Definition
QEND	I*4	Flag: QEND=0, if this is not the last isotope used in this material QEND=1, if this is the last isotope used in this material

/MISC/

Variables used from this common block

Name	Type	Definition
NGROUP	I*4	Number of energy groups for the cross section set on XS.ISO

3. Local Variables

Name	Type	Definition
I	I*4	Composition index on DMMIX, the mix labels
J	I*4	Group index on VV1, the storage space for capture cross sections, also group index on SCAP, SNALF and SNP
K	I*4	Index on DMTBL, the material labels
M	I*4	Index used in reading and skipping records of XS.M.AUX
N	I*4	Composition index on QCSPEC, the number of materials in a composition
L1	I*4	Lower limit of index I on DMMIX the mix table
L2	I*4	Upper limit of index I on DMMIX
L3	I*4	Equal to K - 1, a counter used for reading material block record type 2 in XS.M.AUX
L4	I*4	Temporary for LNO, the maximum scattering order

Name	Type	Definition
L5	I*4	Temporary for LIN, the inelastic scattering order for given material
L6	I*4	Temporary for LEL, the elastic scattering order of given material
L7	I*4	Temporary for LN2N, the (N,2N) scattering order of given material
U1	R*8	Temporary, set equal to the volume fraction of the current material
QREC	I*4	Record number of which XS.M.AUX is currently positioned
MAXLN1	I*4	Maximum order plus one of scattering for the compositions on XS.C.AUX

4. Functions and tasks performed by this subroutine

MIXAUX is called by HOMOG to form composition cross sections from the material cross sections on XS.M.AUX.

XS.M.AUX is positioned at the first record of the material to be read. The capture cross sections are read from XS.M.AUX and added to the current composition. RWAUX is called to read the rest of the material records. If QEND=1, then the composition records are written onto XS.C.AUX by WRTAUX.

5. Subprograms called by this subroutine

CLEAR (entry in POINTR)
RWAUX
ERROUT
SKPREC
WIPOUT (entry in POINTR)
WRTAUX (entry in RDAUX)

6. Subprograms calling this subroutine

HOMOG

7. Error messages generated by this subroutine

22301 - Requested material name does not exist on data set XS.M.AUX.

32301 - Unexpected end of file on data set XS.M.AUX.

22302 - Unexpected end of file on data set XS.M.AUX.

32302 - Parity error on data set XS.M.AUX.

22303 - Unexpected end of file on data set XS.M.AUX.

32303 - Parity error on data set XS.M.AUX.

22351 - Unexpected end of file on data set XS.M.AUX.

32351 - Parity error on data set XS.M.AUX.

Subroutine MIXMIN (DMMIX, VOLFRC, QCSPEC, DMTBL, SETCHI, VV1, NUP, NDN, XA, XTOT, XREM, XTR, XFIS, XFISNU, XF, N, CHI, SCAT, ZMCHI, PXFN, ZDNCHI, NGRP, DCTBL, QCSCAT)

1. Arguments

Name	Type	Dimension	Definition
DMMIX	R*8	QCSLTH	Contains all the names of the materials used in defining the compositions
VOLFRC	R*8	QCSCTH	Contains the volume fractions of materials in composition
QCSPEC	I*4	NCMP	Contains the number of materials used to define a given composition
DMTBL	R*8	NMAT	Contains all the distinct names of the materials used in defining the compositions
SETCHI	R*8	ISCHI*NGROUP	The isotope set fission spectrum
VV1	I*4	2*NGROUP	Used as a buffer containing NUP and NDN arrays
NUP	I*4	NGROUP	Contains the number of groups of sections on XS.C.MIN

Name	Type	Dimension	Definition
NDN	I*4	NGROUP	Contains the number of groups of downscattering for cross sections on XS.C.MIN
XA	R*8	NGROUP	Contains the total cross section for the current composition
XREM	R*8	NGROUP	Contains the total removal cross sections for the current composition
STR	R*8	NGROUP	Contains the transport cross sections for the current composition
XFIS	R*8	NGROUP	Contains the fission cross sections for the current composition
XFISNU	R*8	NGROUP	Contains the nu times fission cross sections for the current composition
XFN	R*8	NGROUP	Contains the nu times fission cross sections for the current material multiplied by the volume fraction
CHI	R*8	QCCHI*NGROUP	Contains the fission spectrum for the current composition
SCAT	R*8	LASCAT*NGROUP	Contains the anisotropic scattering cross sections for a given material and order
ZMCHI	R*8	MCHI*NGROUP	The fission spectrum for a given material
PXFN	R*8	NGROUP	Contains the prompt nu times fission cross sections for the current composition
ZDNCHI	R*8	NGROUP*NFAM	Contains the delayed neutron fission spectrum for the current composition
NGRP	I*4	--	Equal to NGROUP
DCTBL	R*8	NCMP	Contains the distinct names of the compositions
QCSCAT	I*4	NGROUP	Contains the length of the scattering vector on XS.C.MIN

2. Common Blocks

/ARRAY1/

Variables used from this common block

Name	Type	Definition
DCHI	R*8	Contains the characters CHI
DNDN	R*8	Contains the characters NDN
DNUP	R*8	Contains the characters NUP
DPXFN	R*8	Contains the characters PXFN
DSCAT	R*8	Contains the characters SCAT
DSTR	R*8	Contains the characters STR
DXA	R*8	Contains the characters XA
DXFIS	R*8	Contains the characters XFIS
DXFISN	R*8	Contains the characters XFISNU
DXREM	R*8	Contains the characters XREM
DXTOT	R*8	Contains the characters XTOT
DZDNCH	R*8	Contains the characters ZDNCHI

/DSNUM1/

Variables used from this common block

Name	Type	Definition
NUM8	I*4	DSRN of XS.M.MIN
NUM13	I*4	DSRN of XS.C.MIN

/MAT1/

Variables used from this common block

Name	Type	Definition
MAXUP	I*4	Maximum number of groups of upscattering for a given material

Name	Type	Definition
MAXDN	I*4	Maximum number of groups of downscattering for a given material
MAXSCT	I*4	Equal to MAXUPG plus MAXDNG plus one
NMAT	I*4	Number of materials on the material data set
NFMAT	I*4	Number of fissionable materials on XS.M.MIN

/COMP1/

Variables used from this common block

Name	Type	Definition
NCMP	I*4	Number of composition names in the array DCTBL
NFCMP	I*4	Number of fissionable compositions on XS.C.MIN

/DELAY1/

Variables used from this common block

Name	Type	Definition
NFAM	I*4	Number of families of delayed neutrons

/FLAGS/

Variables used from this common block

Name	Type	Definition
MSCHI	I*4	Material set prompt fission spectrum flag: MSCHI=0, if there is no material set fission spectrum MSCHI=1, if the material set fission spectrum is a matrix MSCHI=NGROUP, if the material set fission is a matrix
MCHI	I*4	Material prompt fission spectrum flag: MCHI=0, if this material has no fission spectrum MCHI=-1, if this material uses the set fission spectrum

Name	Type	Definition
		MCHI=1, if this material has a fission spectrum vector MCHI=NGROUP, if this material has a fission spectrum matrix
QCSCHI	I*4	Prompt composition set fission spectrum flag: QCSCHI=0, if there is no composition set fission spectrum QCSCHI=1, if the composition set fission spectrum is a vector QCSCHI=NGROUP, if the composition set fission spectrum is a matrix
QCCHI	I*4	Prompt composition fission spectrum flag: QCCHI=0, if the composition is non-fissionable QCCHI=1, if this composition has a fission spectrum vector QCCHI=NGROUP, if this composition has a fission spectrum vector QCCHI=-1, if this composition uses the set fission spectrum
QEND	I*4	Flag: QEND=0, if this is not the last isotope used in a given material QEND=1, if this is the last isotope used in a given material

/MISC/

Variables used from this common block

Name	Type	Definition
NGROUP	I*4	Number of energy groups for the cross section set on XS.ISO

3. Local Variables

Name	Type	Definition
I	I*4	Index on DMMIX, the material mix label and VOLFRC the volume fractions label also index on DCTBL
J	I*4	Group index on NUP, NDN, QCSCAT and VV1
K	I*4	Material index on DMTBL

Name	Type	Definition
M	I*4	Index on material block in X.S.M.MIN
N	I*4	Composition index on QCSPEC used to form index I
L1	I*4	Lower limit on index I used to compare DMMIX and DMTBL
L2	I*4	Upper limit on index I when comparing DMMIX and DMTBL
L3	I*4	Upper limit of index M, used to skip material blocks in XS.M.MIN
L4	I*4	Upper index on buffer used to read material block in XS.M.MIN, equal to 2*NGROUP
U1	R*8	Equal to the volume fractions of the current material
QREC	I*4	Record number at which XS.M.MIN is positioned

4. Functions and tasks performed by this subroutine

MIXMIN is called by HOMOG to form composition cross sections from the material cross sections on XS.M.MIN.

CLEAR is called to zero out the arrays, NUP, NDN, XA, XTOT, XREM, STR, SCAT, PXFN, ZDNCHI, CHI, XFIS, and XFISNU.

XS.M.MIN is positioned at the first record of the material to be read.

The first record of the current composition is read.

RDMIN is called to read the cross sections of the current material from XS.M.MIN.

5. Subprograms called by this subroutine

CLEAR (entry in POINTR)
RDMIN
ERROUT
SKPREC

6. Subprograms calling this subroutine

HOMOG

7. Error messages generated by this subroutine

22601 - Requested material name does not exist on data set XS.M.MIN.

32601 - Parity error on data set XS.M.MIN.

22603 - Unexpected end of file on data set XS.M.MIN.

22604 - Unexpected end of file on data set XS.M.MIN.

32604 - Parity error on data set XS.M.MIN.

Subroutine MIXMT1

1. Arguments - None

2. Common Blocks

/ARRAY/

Variables used from this common block

Name	Type	Definition
A(10000)	R*8	Container array for the variably dimensioned arrays

/MSIZE/

Variables used from this common block

Name	Type	Definition
MAXSIZ	I*4	Maximum size of the container array A

/ARRAY1/

Variables used from this common block

Name	Type	Definition
DATMDE	R*8	Contains the characters ATMDEN
DDIMIX	R*8	Contains the characters DIMIX

Name	Type	Definition
DDINAM	R*8	Contains the characters DINAM
DDITBL	R*8	Contains the characters DITBL
DDMTBL	R*8	Contains the characters DMTBL
DE	R*8	Contains the characters E
DILOC	R*8	Contains the characters ILOC
DMSPEC	R*8	Contains the characters MSPEC
DSETCH	R*8	Contains the characters SETCHI
DU	R*8	Contains the characters U
DVV1	R*8	Contains the characters VV1
DVEL	R*8	Contains the characters VEL
DZICHI	R*8	Contains the characters ZICHI
DZIXS	R*8	Contains the characters ZIXS

/DSNAM1/

Variables used from this common block

Name	Type	Definition
DNAM2	R*8	Contains the characters B.HOMOG
DNAM4	R*8	Contains the characters XS.ISO
DNAM5	R*8	Contains the characters XS.ISO2

/DSNUM1/

Variables used from this common block

Name	Type	Definition
NUM2	I*4	Data set reference number (DSRN) of B.HOMOG
NUM4	I*4	DSRN of XS.ISO
NUM5	I*4	DSRN of XS.ISO2

/ISO1/

Variables used from this common block

Name	Type	Definition
NISO	I*4	Number of isotopes on data set XS.ISO
NISO2	I*4	Number of isotopes on data set XS.ISO2

/MAT1/

Variables used from this common block

Name	Type	Definition
MSLTH	I*4	Total number of isotopes used to define all the materials
NMAT	I*4	Number of materials on the material data set

/FLAGS/

Variables used from this common block

Name	Type	Definition
ISCHI	I*4	Isotope set fission spectrum flag: ISCHI=0, if there is no isotope set fission spectrum ISCHI=1, if the isotope set fission spectrum is a vector ISCHI=NGROUP, if the isotope set fission spectrum is a matrix
QCHK	I*4	Flag: QCHK=0, if RWISOS is to skip the call to CHKCHI QCHK=1, if RWISOS is to call CHKCHI

/ALFNM1/

Variables used from this common block

Name	Type	Definition
DBLANK	R*8	Blank characters
QZERO	I*4	Contains the integer 0

/MISC/

Variables used from this common block

Name	Type	Definition
NGROUP	I*4	Number of energy groups for the cross section set on XS.ISO
IOLDCH	I*4	Temporary pointer for the variably dimensioned array SETCHI
IZICHI	I*4	Temporary pointer for the variably dimensioned array ZICHI
LSTLOC	I*4	Last used location of the container array A
NGRP1	I*4	Equal to NGROUP plus one

3. Local Variables

Name	Type	Definition
I	I*4	Index
L1	I*4	A temporary for POINTR error routine

4. Functions and tasks performed by this subroutine

MIXMT1 is called by HOMOG to execute Substep 1 of the isotopes → Materials Step. If XS.ISO is input, then XS.ISO2 will be output. NUM4 is set equal to the DSRN of XS.ISO and NUM5 is set equal to the DSRN of XS.ISO2. If XS.ISO is not input, then XS.ISO2 must be input. NUM4 and NUM5 are set equal to the DSRN of XS.ISO2.

The first record of B.HOMOG and the first record of XS.ISO (XS.ISO2) are read. PUTPNT is called to set up the pointers for the variably dimensioned arrays DITBL, DINAM, ILOC, E, U, VEL and SETCHI, and RWSBLK is called to read the rest of the first file of data set XS.ISO (XS.ISO2). PUTPNT is called to set up the pointers for the variably dimensioned arrays ZICHI, MSPEC, DIMIX, ATMDEN, DMTBL, ZIXS and VV1, the RWISOS is called to read the second file of XS.ISO (XS.ISO2).

5. Subprograms called by this subroutine

IGET (entry in POINTR)
PURGE (entry in POINTR)
SNIFF (ARC System module)
ERROUT
PUTPNT (entry in POINTR)
RWISOS
RWSBLK
WIPOUT (entry in POINTR)

6. Subprograms calling this subroutine

HOMOG

7. Error messages generated by this subroutine

101 - No isotope data set was supplied

102 - Data set B.HOMOG is missing

103 - The container array has overflowed

104 - The container array has overflowed

20101 - Unexpected end of file on data set B.HOMOG

20102 - Unexpected end of file on data set XS.ISO

20151 - Expected end of file was not encountered on data set XS.ISO

30101 - Parity error on B.HOMOG

30102 - Parity error on XS.ISO

30151 - Parity error on XS.ISO

Subroutine MIXMT2 (DMTBL)

1. Arguments

Name	Type	Dimension	Definition
DMTBL	R*8	NMAT	Contains all the distinct names of the defined materials

2. Common Blocks

/ARRAY/

Variables used from this common block

Name	Type	Definition
A(10000)	R*8	Container array for the variably dimensioned arrays

/ARRAY1/

Variables used from this common block

Name	Type	Definition
DANISO	R*8	Contains the characters ANISO
DATMDE	R*8	Contains the characters ATMDEN
DDINA	R*8	Contains the characters DDINAM
DDIMIX	R*8	Contains the characters DIMIX
DDINAM	R*8	Contains the characters DINAM
DDITBL	R*8	Contains the characters DITBL
DILOC	R*8	Contains the characters ILOC
DLNDN	R*8	Contains the characters LNDN
DLNUP	R*8	Contains the characters LNUP
DMNDN	R*8	Contains the characters MNDN
DMNUP	R*8	Contains the characters MNUP
DMSPEC	R*8	Contains the characters MSPEC
DPXFIS	R*8	Contains the characters PXFISN
DQDLOC	R*8	Contains the characters QDLOC
DSCAP	R*8	Contains the characters SCAP
DSENR	R*8	Contains the characters SENR
DSETCH	R*8	Contains the characters SETCHI
DSINR	R*8	Contains the characters SINR

Name	Type	Definition
DSNALF	R*8	Contains the characters SNALF
DSNP	R*8	Contains the characters SNP
DSN2NR	R*8	Contains the characters SN2NR
DSTR	R*8	Contains the characters STR
DVV1	R*8	Contains the characters VV1
DXEL	R*8	Contains the characters XEL
DXFIS	R*8	Contains the characters XFIS
DXFISN	R*8	Contains the characters XFISNU
DXFN	R*8	Contains the characters XFN
DXINEL	R*8	Contains the characters XINEL
DXN2N	R*8	Contains the characters XN2N
DXSCT	R*8	Contains the characters XSCT
DZDMCH	R*8	Contains the characters ZDMCHI
DZDNFR	R*8	Contains the characters ZDNFRC
DZDNYL	R*8	Contains the characters ZDNYLD
DZICHI	R*8	Contains the characters ZICHI
DZMCHI	R*8	Contains the characters ZMCHI

/DSNAM1/

Variables used from this common block

Name	Type	Definition
DNAM3	R*8	Contains the characters XS.DELAY
DNAM6	R*8	Contains the characters XS.M.ANI
DNAM7	R*8	Contains the characters XS.M.AUX
DNAM8	R*8	Contains the characters XS.M.MIN

/DSNUM1/

Variables used from this common block

Name	Type	Definition
NUM3	I*4	DSRN of XS.DELAY
NUM5	I*4	DSRN of XS.ISO
NUM6	I*4	DSRN of XS.M.ANI
NUM7	I*4	DSRN of XS.M.AUX
NUM8	I*4	DSRN of XS.M.MIN

/ISO1/

Variabless used from this common block

Name	Type	Definition
NISO2	I*4	Number of isotopes on data set XS.ISO2

/MAT1/

Variables used from this common block

Name	Type	Definition
MAXUP	I*4	Maximum number of groups of upscattering for a given material
MAXDN	I*4	Maximum number of groups of downscattering for a given material
MAXLNO	I*4	Equal to the maximum order of scattering plus one for the materials on the material data sets
MAXSCT	I*4	Equal to MAXUPG plus MAXDNG plus one
NMAT	I*4	Number of materials on the material data set
NFMAT	I*4	Number of fissionable materials on XS.M.MIN
NUMANI	I*4	Number of materials with anisotropic scattering on data set XS.M.ANI

/MAT2/

Variables used from this common block

Name	Type	Definition
QANI	I*4	Flag set to the DSRN of XS.M.ANI, equal to N2: if QANI=0, XS.M.ANI is not formed if QANI≠0, XS.M.ANI is formed
QAUX	I*4	Flag set to the DSRN of XS.M.AUX, equal to N3: if QAUX=0, XS.M.AUX is not formed if QAUX≠0, XS.M.AUX is formed
QMIN	I*4	Flag set to the DSRN of XS.M.MIN, equal to N4: if QMIN=0, no XS.M.MIN is formed if QMIN≠0, XS.M.MIN is formed

/DELAY1/

Variables used from this common block

Name	Type	Definition
NFAM	I*4	Number of families of delayed neutrons
NFISO	I*4	Number of fissionable isotopes with delayed neutrons

/FLAGS/

Variables used from this common block

Name	Type	Definition
ISCHI	I*4	Isotope set fission spectrum flag: ISCHI=0, if there is no isotope set fission spectrum ISCHI=1, if the isotope set fission spectrum is a vector ISCHI=NGROUP, if the isotope set fission spectrum is a matrix
MSCHI	I*4	Material set fission spectrum flag: MSCHI=0, if there is no material set fission spectrum MSCHI=1, if the material set fission spectrum is a vector

Name	Type	Definition
QCVT	I*4	Flag: QCVT=0, if all the fission spectrums are identical vectors QCVT=1, if the fission spectrum vectors must be converted to fission spectrum matrices

/MISC/

Variables used from this common block

Name	Type	Definition
NGROUP	I*4	Number of energy groups for the cross section set on XS.ISO
LSTLOC	I*4	Last used location of the container array A

3. Local Variables

Name	Type	Definition
I	I*4	Index
J1	I*4	Number of groups on XS.DELAY
K1	I*4	Flag to determine if arguments to module specify that nothing be done
L1	I*4	Temporary for dimensioning of arrays
L2	I*4	Temporary for dimensioning of arrays

4. Functions and tasks performed by this subroutine

MIXMT2 is called by HOMOG to execute Substep 2 of the Isotopes → Materials Step.

If NUM3 > 0, then PUTPNT is called to set up pointers for the variably dimensioned arrays PXFISN, ZDNYLD, ZDMCHI, ZDNFRC, DDINAM, and QDLOC.

If QANI ≠ 0, then the first record of XS.M.ANI is written.

If QAUX ≠ 0, then the first record of XS.M.AUX is written.

If QMIN $\neq$ 0, then the first record of XS.M.MIN is written.

PUTPNT is called to set up the pointers for the variably dimensioned arrays XFIS, XFISNU, XFN, STR, SCAP, SNALF, SNP, ANISO, MNUP, MNDN, XSCT, XINEL, XEL, XN2N, LNUP, LNDN, SINR, SENR, and SN2NR.

FRMMTS is called to homogenize isotopes to materials.

5. Subprograms called by this subroutine

IGET (entry in POINTR)	FRMMTS
PURGE (entry in POINTR)	PUTPNT (entry in POINTR)
REDEF (entry in POINTR)	SKPREC
SNIFF (ARC System module)	WIPOUT (entry in POINTR)
ERROUT	

6. Subprograms calling this subroutine

HOMOG

7. Error messages generated by this subroutine

2001 - The number of groups on XS.DELAY does not agree with the number of groups of XS.ISO.

2002 - The container array has overflowed.

2003 - The container array has overflowed.

2051 - In the CALL HOMOG(N1, N2, N3, N4, N5) statement, N3, N4 and N5 were all zero.

22001 - Unexpected end of file on data set XS.DELAY.

22002 - Unexpected end of file on data set XS.ISO2.

32001 - Parity error on data set XS.DELAY.

32002 - Parity error on data set XS.ISO2.

Subroutine PRNTA8 (HOLL, A, N)

Entry Points

ENTRY PRINTI4(HOLL, IA, N)
ENTRY PRINTA(HOLL, A, N)

1. Arguments

Name	Type	Dimension	Definition
HOLL	R*4	2	Name being printed
A	R*8	10000	Array used for storing and printing point and name arrays
N	I*4	--	Upper limit of index on array being printed
IA	I*4	2500	Array used for storing and printing integer arrays

2. Common Blocks - None

3. Local Variables

Name	Type	Definition
I	I*4	Index on A and IA arrays

4. Functions and tasks performed by this subroutine

This is a utility routine used with the data set edit routines.

5. Subprograms called by this subroutine - None

6. Subprograms calling this subroutine

BHOMOG
XSCAUX
XSMAUX
XSCMIN
XSMMIN
RWSCT
XSCANI
XSISO
XSMANI

7. Error messages generated by this subroutine - None

Subroutine RDANI (SCAT, CSCAT, VOLFRC, NGRP, MSCTP, LASCTP)

Entry Points

Entry WRTANI

1. Arguments

Name	Type	Dimension	Definition
SCAT	R*8	LASCTP*NGROUP	Contains the anisotropic scattering cross sections for a given material and order
CSCAT	R*8	MSCTP*NGROUP	Contains the anisotropic scattering cross sections for a given composition and order
VOLFRC	R*8	--	Volume fraction of the current material in the current composition
NGRP	I*4	--	Quantity equal to NGROUP used to dimension CSCAT
MSCTP	I*4	--	Quantity equal to MAXSCT the maximum scattering order used to dimension CSCAT
LASCTP	I*4	--	Length of the scattering vector, a quantity equal to LASCAT used to dimension SCAT

2. Common Blocks

/DSNUM1/

Variables used from this common block

Name	Type	Definition
NUM6	I*4	DSRN of XS.M.ANI
NUM11	I*4	DSRN of XS.C.ANI

/MAT1/

Variables used from this common block

Name	Type	Definition
LASCAT	I*4	The scattering vector length for a given material and order
MAXUP	I*4	Maximum number of groups of upscattering for a given material
MLNO	I*4	Maximum order of scattering plus one for a given material

/COMP1/

Variables used from this common block

Name	Type	Definition
LASCT1	I*4	Length of the scattering vector for a given anisotropic composition
MAXUP1	I*4	Maximum number of groups of upscattering for the anisotropic compositions
QCLNO	I*4	Maximum order of scattering plus one for the anisotropic compositions

/FLAGS/

Variables used from this common block

Name	Type	Definition
QEND	I*4	Flag: QEND=0, if this is not the last isotope used in this material QEND=1, if this is the last isotope used in this material

/MISC/

Variables used from this common block

Name	Type	Definition
NGROUP	I*4	Number of energy groups for the cross section set on XS.ISO

/MISC2/

Variables used from this common block

Name	Type	Definition
MAXUPG	I*4	The maximum number of groups of upscattering on the material data sets

3. Local Variables

Name	Type	Definition
I	I*4	Length index on SCAT and CSCAT in XS.M.ANI material block
J	I*4	Group index on SCAT and CSCAT in XS.M.ANI material block
L	I*4	Order of material blocks in XS.M.ANI
I1	I*4	Equal to MAXUPG - MAXUP1
L1	I*4	Temporary equal to L -1 used to compare material blocks

4. Functions and tasks performed by this subroutine

RDANI is called by MIXANI to read the material cross sections from XS.M.ANI, add them to the current composition.

ENTRY WRTANI writes the current composition cross sections onto XS.C.ANI. ERROUT is the only routine called.

5. Subprograms called by this subroutine

ERROUT

6. Subprograms calling this subroutine

MIXANI

7. Error messages generated by this subroutine

22201 - Unexpected end of file on data set XS.M.ANI.

32201 - Parity error on data set XS.M.ANI.

Subroutine RDCHI (CHI, NUM, NP)

Entry Points: WRICHI (NUM, NP)

1. Arguments

Name	Type	Dimension	Definition
CHI	R*8	NP, NGROUP	Contains the fission spectrum
NUM	I*4	--	Contains the DSRN of the data set from which the fission spectrum is read or onto which the fission spectrum is written
NP	I*4	--	Equal to one, if CHI is a vector Equal to NGROUP, if CHI is a matrix

2. Common Blocks

/MISC/

Variables used from this common block

Name	Type	Definition
NGROUP	I*4	Number of energy groups for the cross section set on XS.ISO

3. Local Variables

Name	Type	Definition
I	I*4	Index on NP quantities
J	I*4	Index on groups

4. Functions and tasks performed by this subroutine

RDCHI reads the fission spectrum record from the data set with a DSRN of NUM.

WRTCHI writes the fission spectrum record read by RDCHI onto the data set with a DSRN of NUM.

5. Subprograms called by this subroutine

ERROUT

6. Subprograms calling this subroutine

FRMMTS
RDISO
RWISO
RWSBLK

7. Error messages generated by this subroutine

20701 - Unexpected end of file on data set.

30701 - Parity error on data set.

Subroutine RDISO (DINAM, ATMDEN, DDINAM, QDLOC, ZDNYLD, ZDNFRC)

1. Arguments

Name	Type	Dimension	Definition
DINAM	R*8	--	Contains the name of the current isotope
ATMDEN	R*8	--	Atom density for a given isotope in a given material
DDINAM	R*8	NFISO	Contains the names of the isotopes on data set XS.DELAY
QDLOC	I*4	NFISO	Contains the number of records to skip from the beginning of the second file of XS.DELAY to access a given isotope
ZDNYLD	R*8	NGROUP	The delayed neutron yield for a given isotope
ZDNFRC	R*8	NFAM	The fraction of the delayed neutron yield that goes into a given family

2. Common Blocks

/ARRAY/

Variables used from this common block

Name	Type	Definition
A(10000)	R*8	Container array for the variably dimensioned arrays

/QREC/

Variables used from this common block

Name	Type	Definition
QREC	I*4	The number of the record at which data set XS.DELAY is currently positioned

/ARRAY1/

Variables used from this common block

Name	Type	Definition
DANISO	R*8	Contains the characters ANISO
DLNDN	R*8	Contains the characters LNDN
DLNUP	R*8	Contains the characters LNUP
DMNDN	R*8	Contains the characters MNDN
DMNUP	R*8	Contains the characters MNUP
DPXFIS	R*8	Contains the characters PXFISN
DSCAP	R*8	Contains the characters SCAP
DSENR	R*8	Contains the characters SENR
DSETCH	R*8	Contains the characters SETCHI
DSINR	R*8	Contains the characters SINR
DSNALF	R*8	Contains the characters SNALF
DSNP	R*8	Contains the characters SNP
DSN2NR	R*8	Contains the characters SN2NR
DSTR	R*8	Contains the characters STR
DXEL	R*8	Contains the characters XEL
DXFIS	R*8	Contains the characters XFIS
DXFISN	R*8	Contains the characters XFISNU
DXFN	R*8	Contains the characters XFN
DXINEL	R*8	Contains the characters XINEL
DXN2N	R*8	Contains the characters XN2N
DXSCT	R*8	Contains the characters XSCT
DZDMCH	R*8	Contains the characters ZDMCHI
DZDNFR	R*8	Contains the characters ZDNFRC
DZDNYL	R*8	Contains the characters ZDNLYD

Name	Type	Definition
DZICHI	R*8	Contains the characters ZICHI
DZIXS	R*8	Contains the characters ZIXS
DZMCHI	R*8	Contains the characters ZMCHI

/DSNUM1/

Variables used from this common block

Name	Type	Definition
NUM3	I*4	DSRN of XS.DELAY
NUM5	I*4	DSRN of XS.ISO2

/ISO1/

Variables used from this common block

Name	Type	Definition
LEL	I*4	Order of elastic scattering plus one for a given isotope
LIN	I*4	Order of inelastic scattering plus one for a given isotope
LN2N	I*4	Order of N2N scattering plus one for a given isotope
ILNO	I*4	The maximum of LIN, LEL, and LN2N

/MAT1/

Variables used from this common block

Name	Type	Definition
LASCAT	I*4	The scattering vector length for a given material and order

/DELAY1/

Variables used from this common block

Name	Type	Definition
NFAM	I*4	Number of families of delayed neutrons
NFISO	I*4	Number of isotopes on data set XS.ISO2

/FLAGS/

Variables used from this common block

Name	Type	Definition
ISCHI	I*4	Isotope set fission spectrum flag: ISCHI=0, if there is no isotope set fission spectrum ISCHI=1, if the isotope set fission spectrum is a vector ISCHI=NGROUP, if the isotope set fission spectrum is a matrix
ICHI	I*4	Isotope fission spectrum flag: ICHI=0, if this isotope has no fission spectrum ICHI=-1, if this isotope uses the set fission spectrum ICHI=1, if this isotope has a fission spectrum vector ICHI=NGROUP, if this isotope has a fission spectrum matrix
MCHI	I*4	Prompt material fission spectrum flag: MCHI=0, if this material has no fission spectrum MCHI=-1, if this material uses the set fission spectrum MCHI=1, if this material has a fission spectrum vector MCHI=NGROUP, if this material has a fission spectrum matrix
QCVT	I*4	Flag: QCVT=0, if all the fission spectrums are identical vectors QCVT=1, if the fission spectrum vectors must be converted to fission spectrum matrices

Name	Type	Definition
QDELAY	I*4	Flag: QDELAY=0, if there are no delayed neutrons QDELAY=1, if there are delayed neutrons

/MISC/

Variables used from this common block

Name	Definition
LENGTH	Length of the non-scattering cross section record for isotope DITBL
NGROUP	Number of energy groups for the cross section set on XS.ISO

3. Local Variables

Name	Type	Definition
J	I*4	Reading index
N	I*4	Index in reading XS.DELAY
L2	I*4	Record location in XS.DELAY
DINME	R*8	Used to check the name of the isotope read from XS.ISO2 with the expected isotope name
DDINME	R*8	Name of isotope read from XS.DELAY

4. Functions and tasks performed by this subroutine

RDISO reads some isotope data from XS.ISO2. It is called by FRMMTS.

Some isotope data is read from XS.ISO2. If NUM3 > 0, delayed neutron data for this isotope is read from XS.DELAY. FRMMAT is called to add the current isotope to the current material.

5. Subprograms called by this subroutine

IGET (entry in POINTR)
RDCHI
ERROUT
FRMMAT
SKPREC
VTOMTX
SQUEZE (ARC System module)

6. Subprograms calling this subroutine

FRMMTS

7. Error messages generated by this subroutine

901 - Isotope name just read from XS.ISO2 does not match the requested name.

902 - Requested isotope name does not exist on data set XS.DELAY.

903 - Isotope name just read from XS.DELAY does not match the requested name.

904 - A fissionable isotope on XS.ISO2 uses the set fission spectrum but the set fission spectrum does not exist.

20901 - Unexpected end of file on data set XS.ISO2.

20902 - Unexpected end of file on data set XS.ISO2.

20903 - Unexpected end of file on data set XS.DELAY.

20904 - Unexpected end of file on data set XS.DELAY.

20905 - Unexpected end of file on data set XS.DELAY.

20906 - Unexpected end of file on data set XS.DELAY.

20907 - Unexpected end of file on data set XS.DELAY.

20908 - Unexpected end of file on data set XS.ISO2.

30901 - Parity error on data set XS.ISO2.

30902 - Parity error on data set XS.ISO2.

30903 - Parity error on data set XS.DELAY.

30904 - Parity error on data set XS.DELAY.

30905 - Parity error on data set XS.DELAY.

30906 - Parity error on data set XS.DELAY.

30907 - Parity error on data set XS.DELAY.

30908 - Parity error on data set XS.ISO2.

Subroutine RDSCT (LTH, VV1, QSTART, SCAT, ATMDEN)

1. Arguments

Name	Type	Dimension	Definition
LTH	I*4	--	Sum = upscattering groups + downscattering groups + 1 representing the length of the scattering record to be read from XS.ISO2
VV1	R*8	LTH	Temporary storage for reading in the isotope scattering record
QSTART	I*4	--	Starting index of SCAT minus 1 used for record positioning of the array VV1
SCAT	R*8	LTH	Output scattering cross section for a given material, order and type
ATMDEN	R*8	--	Atomic density for a given isotope in a given material

2. Common Blocks

/DSNUM1/

Variables used from this common block

Name	Type	Definition
NUM5	I*4	DSRN of XS.ISO2

3. Local Variables

Name	Type	Definition
I	I*4	Index on VV1 used in reading cross sections. Also increment index on output SCAT

4. Functions and tasks performed by this subroutine

RDSCT is called by FRMSCT to read the scattering record from XS.ISO2 and to add it to the material scattering arrays.

5. Subprograms called by this subroutine

ERROUT

6. Subprograms calling this subroutine

FRMSCT

7. Error messages generated by this subroutine

21201 - Unexpected end of file on data set XS.ISO2.

31201 - Parity error on data set XS.ISO2.

Subroutine RDSCT1 (CSCAT, SCAT, VOLFRC, L, LSCATP, NGRP, MSCTP, CREM)

Entry Points

Entry 1 RDEM (CREM, REM)

Entry 2 WRTSCT (CSCAT, L)

Entry 3 WRTREM (CREM)

1. Arguments

Name	Type	Dimension	Definition
CSCAT	R*8	MAXSCT*NGROUP*QCLNO	Contains the scattering cross sections for a given composition on XS.C.AUX
SCAT	R*8	LSCAT*NGROUP	The scattering cross section for a given material and order on XS.M.AUX
VOLFRC	R*8	--	Volume fraction for the current material
L	I*4	--	Scattering block index used to read inelastic scattering cross sections
LSCATP	I*4	--	Equal to LASCAT used for dimensioning SCAT
NGRP	I*4	--	Equal to NGROUP used for dimensioning CSCAT and CREM
MSCTP	I*4	--	Equal to MAXSCT used for dimensioning CSCAT
CREM	R*8	NGROUP	Contains the removal cross sections for a given composition, order and type on XS.C.AUX
REM	R*8	NGROUP	The removal cross section for a given material, order and type on XS.M.AUX

2. Common Blocks

/DSNUM1/

Variables used from this common block

Name	Type	Definition
NUM7	I*4	DSRN of XS.M.AUX
NUM12	I*4	DSRN of XS.C.AUX

/MAT1/

Variables used from this common block

Name	Type	Definition
MAXUP	I*4	Maximum number of groups of upscattering for a given material

/COMP1/

Variables used from this common block

Name	Type	Definition
LSCT1	I*4	Length of the scattering cross section vector for a given composition on XS.C.AUX
MAXUP1	I*4	Maximum number of groups of upscattering for the anisotropic compositions

/MISC/

Variables used from this common block

Name	Type	Definition
NGROUP	I*4	Number of energy groups for the cross section set on XS.ISO
LSCAT	I*4	Length of the scattering cross section vector for a given material and order on XS.M.AUX

/MISC2/

Variables used from this common block

Name	Type	Definition
MAXUPG	I*4	Maximum number of groups of upscattering on the material data sets

3. Local Variables

Name	Type	Definition
I	I*4	Length index on SCAT, CSCAT
J	I*4	Group index on CSCAT, SCAT, REM, CREM
L	I*4	Scattering index MCSCAT, SCAT, REM, and CREM
I1	I*4	Temporary equal to MAXUPG - MAXUP used for indexing CSCAT

4. Functions and tasks performed by this subroutine

RDSCT1 is called by RWAUX to read the material scattering cross sections from XS.M.AUX and add them to the current composition.

ENTRY RDREM(CREM,REM) is called by RWAUX to read the material removal cross sections from XS.M.AUX and add them to the current composition.

ENTRY WRTSCT(CSCAT,L) is called by RWAUX to write the composition scattering cross sections onto XS.C.AUX.

ENTRY WRTREM(CREM) is called by RWAUX to write the composition removal cross section onto XS.C.AUX.

ERROUT is the only routine called.

5. Subprograms called by this subroutine

ERROUT

6. Subprograms calling this subroutine

RWAUX

7. Error messages generated by this subroutine

22501 - Unexpected end of file on data set XS.M.AUX.

22502 - Unexpected end of file on data set XS.M.AUX.

32501 - Parity error on data set XS.M.AUX.

32502 - Parity error on data set XS.M.AUX.

Subroutine RDMIN (MNUP, VV1, XA, XTOT, XREM, STR, VOLFRC, XFIS, XFISNU, XFN, CHI, CSCAT, ZMCHI, SETCHI, NUP, NDN, PXFN, ZDNCHI, NGRP, MSCTP, QCSCAT)

1. Arguments

Name	Type	Dimension	Definition
MNUP	I*4	NGROUP	The number of groups of upscattering for a given material and group
VV1	R*8	L1	Variable length buffer used to contain group constants in record type 4
XA	R*8	NGROUP	Contains the absorption cross sections for the current composition
XTOT	R*8	NGROUP	Contains the total cross sections for the current composition
XREM	R*8	NGROUP	Contains the total removal cross sections for the current composition
STR	R*8	NGROUP	Contains the transport cross sections for the current composition
VOLFRC	R*8	QCSCTH	The volume fraction of the current material
XFIS	R*8	NGROUP	Contains the fission cross sections for the current compositions

Name	Type	Dimension	Definition
XFISNU	R*8	NGROUP	Contains the nu times fission cross sections for the current composition
XFN	R*8	NGROUP	Contains the nu times fission cross sections for the current material multiplied by the volume fraction
CHI	R*8	QCCHI*NGROUP	Contains the fission spectrum for the current composition
CSCAT	R*8	MAXSCT*NGROUP	Contains the scattering cross sections for the current composition
ZMCHI	R*8	MCHI*NGROUP	The fission spectrum for a given material
SETCHI	R*8	ISCHI*NGROUP	The isotope set fission spectrum
NUP	I*4	NGROUP	Contains the number of groups of upscattering cross sections on XS.C.MIN
NDN	I*4	NGROUP	Contains the number of groups of down-scattering for the scattering cross sections on XS.C.MIN
PXFN	R*8	NGROUP	Contains the prompt nu times fission cross sections for the current composition
ZDNCH	R*8	NGROUP*NFAM	Contains the delayed neutron fission spectrum for the current composition
NGRP	I*4	--	Variable equal to NGROUP used for dimensioning ZMCHI
MSCTP	I*4	--	Variable equal to MAXSCT used for dimensioning CSCAT
QCSCAT	I*4	NGROUP	Contains the length of the scattering vectors on XS.C.MIN

2. Common Blocks

/MISC2/

Variables used from this common block

Name	Type	Definition
MAXUPG	I*4	Maximum number of groups of upscattering on the material data sets

/DSNUM1/

Variables used from this common block

Name	Type	Definition
NUM8	Type	DSRN of XS.M.MIN
NUM13	Type	DSRN of XS.C.MIN

/DELAY1/

Variables used from this common block

Name	Type	Definition
NFAM	I*4	Number of families of delayed neutrons

/FLAGS/

Variables used from this common block

Name	Type	Definition
MCHI	I*4	Material set fission spectrum flag: MCHI=0, if this material has no fission spectrum MCHI=-1, if this material uses the set fission spectrum MCHI=1, if this material has a fission spectrum vector MCHI=NGROUP, if this material has a fission spectrum matrix

Name	Type	Definition
QCSCHI	I*4	Composition prompt set fission spectrum flag: QCSCHI=0, if there is no composition set fission spectrum QCSCHI=1, if the composition set fission spectrum is a vector QCSCHI=NGROUP, if the composition set fission spectrum is a matrix
QCCHI	I*4	Prompt composition fission spectrum flag: QCCHI=0, if the composition is non-fissionable QCCHI=1, if this composition has a fission spectrum vector QCCHI=-1, if this composition uses the set fission spectrum QCCHI=NGROUP, if this composition has a fission spectrum matrix
QEND	I*4	Flag: QEND=0, if this is not the last isotope used in this material QEND=1, if this is the last isotope used in this material

/MISC/

Variables used from this common block

Name	Type	Definition
NGROUP	I*4	Number of energy groups for the cross section set on XS.ISO

3. Local Variables

Name	Type	Definition
I	I*4	Index on group constants VV1 in the material block
J	I*4	Group index on NUP, NDN, QSCAT, XA, XTOT, REM, STR, XFIS, XFISNU, CSCAT, CHI, PXFN, ZDNCHI
K	I*4	Group index on ZMCHI also base index on VV1 used to define ZMCHI delayed neutron index on ZDNCHI

4. Functions and tasks performed by this subroutine

RDMIN is called by MIXMIN to read the material cross sections from XS.M.MIN and add them to the current composition. When the composition is formed, RDMIN writes the composition cross sections onto XS.C.MIN.

5. Subprograms called by this subroutine

ERROUT
FINCHI (entry in FRMCHI)
FRMCHI

6. Subprograms calling this subroutine

MIXMIN

7. Error messages generated by this subroutine

22701 - Unexpected end of file on data set XS.M.MIN

23701 - Parity error on data set XS.M.MIN

Subroutine RDSPEC (DMMIX, VOLFRC, QCSPEC, DMTBL, DCTBL, QCSLTH, NCMP, NMAT, NUM2)

1. Arguments

Name	Type	Dimension	Definition
DMMIX	R*8	QCSLTH	Contains the material names used to define the compositions named in the array DCTBL
VOLFRC	R*8	QCSLTH	Floating point parameter which contains the volume fractions of materials which define the compositions

Name	Type	Dimension	Definition
QCSPEC	I*4	NCMP	Contains the number of materials used to define a given composition
DMTBL	R*8	NMAT	Contains the distinct material names in the array DMMIX
DCTBL	R*8	NCMP	Contains the composition names
QCSLTH	I*4	--	Number of material names in the array DMMIX
NCMP	I*4	--	Number of composition names in the array DCTBL
NMAT	I*4	--	Number of material names in the array DMTBL
NUM2	I*4	--	DSRN of data set B.HOMOG

2. Common Blocks - None

3. Local Variables

Name	Type	Definition
I	I*4	Index

4. Functions and tasks performed by this subroutine

RDSPEC reads the composition specifications from data set B.HOMOG.

5. Subprograms called by this subroutine

ERROUT

6. Subprograms calling this subroutine

CALLT1

7. Error messages generated by this subroutine

ERROR NUMBER = nnnnn

Where nnnnn is

Number	Reason
22801	Unexpected end of file on data set B.HOMOG
32801	Parity error on data set B.HOMOG

Subroutine RWAUX (VOLFRC, SCAT, XTIR, XTER, XTN2NR, XINEL, XEL, XN2N, REM)

Entry Points

Entry WRTAUX

1. Arguments

Name	Type	Dimension	Definition
VOLFRC	R*8	QCSCTH	Contains the volume fractions of materials in compositions
SCAT	R*8	LSCAT*NGROUP	The scattering cross section for a given material and order on XS.M.AUX
XTIR	R*8	NGROUP	The total inelastic removal cross section for a given composition and order
XTER	R*8	NGROUP	The total elastic removal cross section for a given composition and order
XTN2NR	R*8	NGROUP	Total N2N removal cross section for a given composition and order
XINEL	R*8	LASCTP* NGROUP* MLNO	The inelastic scattering cross section for a given material

Name	Type	Dimension	Definition
XEL	R*8	LASCTP* NGROUP* MLNO	The elastic scattering cross section for a given material
XN2N	R*8	LASCTP* NGROUP MLNO	The N2N scattering cross section for a given material
REM	R*8	NGROUP	The removal cross section for a given material order and type on XS.M.AUX

2. Common Blocks

/DSNUM1/

Variables used from this common block

Name	Type	Definition
NUM7	I*4	DSRN of XS.M.AUX
NUM12	I*4	XS.C.AUX

/MAT1/

Variables used from this common block

Name	Type	Definition
LELM	I*4	Order of elastic scattering plus one for a given material
LINM	I*4	Order of inelastic scattering plus one for a given material
LN2NM	I*4	Order of N2N scattering plus one for a given material
MLNO	I*4	Maximum order of scattering plus one for a given material
MAXSCT	I*4	Equal to MAXUPG plus MAXDNG plus one

/COMP1/

Variables used from this common block

Name	Type	Definition
LELC	I*4	Maximum order plus one of the elastic scattering cross sections for a given composition on XS.C.AUX
LINC	I*4	Maximum order plus one of the inelastic scattering cross sections for a given composition on XS.C.AUX
LN2NC	I*4	Maximum order plus one of the N2N scattering cross sections for a given composition on XS.C.AUX
LSCT1	I*4	Length of the scattering cross section vector for a given composition on XS.C.AUX
NUP1	I*4	The number of groups of upscattering for a given composition on XS.C.AUX
QCLNO	I*4	Maximum order of scattering plus one for the anisotropic compositions

/FLAGS/

Variables used from this common block

Name	Type	Definition
QEND	I*4	Flag: QEND=0, if this is not the last isotope used in this material QEND=1, if this is the last isotope used in this material

/MISC/

Variables used from this common block

Name	Type	Definition
NGROUP	I*4	Number of energy groups for the cross section set on XS.ISO
NUP	I*4	Number of groups of upscattering for a given material and order on XS.M.AUX

Name	Type	Definition
LSCAT	I*4	Length of the scattering cross section vector for a given material and order on XS.M.AUX

3. Local Variables

Name	Type	Definition
L	I*4	Index on scattering blocks used for reading XS.M.AUX and writing XS.C.AUX or XS.C.ANI scattering block arrays

4. Functions and tasks performed by this subroutine

RWAUX is called by MIXAUX to read the material cross sections from XS.M.AUX and add them to the current composition.

ENTRY WRTAUX is called by MIXAUX to write the composition cross section onto XS.C.AUX.

5. Subprograms called by this subroutine

RDREM (entry in RDSCT1)
ERROUT
RDSCT1
WRTREM (entry in RDSCT1)
WRTSCT (entry in RDSCT1)

6. Subprograms calling this subroutine

MIXAUX

7. Error messages generated by this subroutine

22401 - Unexpected end of file on data set XS.M.AUX

32401 - Parity error on data set XS.M.AUX

Subroutine RWISO (DITBL)

1. Arguments

Name	Type	Dimension	Definition
DITBL	R*8	--	Contains the name of the current isotope

2. Common Blocks

/ARRAY/

Variables used from this common block

Name	Type	Definition
A(10000)	R*8	Container array for the variably dimensioned arrays

/ARRAY1/

Variables used from this common block

Name	Type	Definition
DZICHI	R*8	Contains the characters ZICHI
DZIXS	R*8	Contains the characters ZIXS

/DSNAM1/

Variables used from this common block

Name	Type	Definition
DNAM9	R*8	Contains the characters SCR001

/DSNUM1/

Variables used from this common block

Name	Type	Definition
NUM4	I*4	DSRN of XS.ISO
NUM5	I*4	DSRN of XS.ISO2
NUM9	I*4	DSRN of SCR001

/ISO1/

Variables used from this common block

Name	Type	Definition
LEL	I*4	Order of elastic scattering plus one for a given isotope
LIN	I*4	Order of inelastic scattering plus one for a given isotope
LN2N	I*4	Order of N2N scattering plus one for a given isotope
IDN	I*4	Maximum number of groups of downscattering for a given isotope
IUP	I*4	Maximum number of groups of upscattering for a given isotope

/FLAGS/

Variables used from this common block

Name	Type	Definition
ISCHI	I*4	Isotope set fission spectrum flag: ISCHI=0, if there is no isotope set fission spectrum ISCHI=1, if the isotope set fission spectrum is a vector ISCHI=NGROUP, if the isotope set fission spectrum is a matrix

Name	Type	Definition
ICHI	I*4	Isotope fission spectrum flag: ICHI=0, if this isotope has no fission spectrum ICHI=-1, if this isotope uses the set fission spectrum ICHI=1, if this isotope has a fission spectrum vector ICHI=NGROUP, if this isotope has a fission spectrum matrix

/MISC/

Variables used from this common block

Name	Type	Definition
LENGTH	I*4	Length of the non-scattering cross section record for isotope DITBL

3. Local Variables

Name	Type	Definition
DINME	R*8	Used to check the isotope name read from XS.ISO against DITBL
DITBL	R*8	Contains the name of the current isotope

4. Functions and tasks performed by this subroutine

RWISO is the driver for the reading of isotope DITBL and, if XS.ISO is input, for the writing of DITBL onto XS.ISO2. It is called from RWISOS.

If the isotope has a fission spectrum, RDCHI is called to read it. If XS.ISO is input, then WRTCHI is called to write the fission spectrum onto XS.ISO2. RWIXS is called to read the cross section data from XS.ISO (XS.ISO2) and, if XS.ISO is input, to write this data onto XS.ISO2. Some isotope information is written onto the scratch data set SCR001 for use by RWISOS.

5. Subprograms called by this subroutine

IGET (entry in POINTR)
RDCHI
RWIXS
SNIFF (ARC System module)
ERROUT
SQUEZE (ARC System module)
WRTCHI (entry in RDCHI)

6. Subprograms calling this subroutine

RWISOS

7. Error messages generated by this subroutine

301 - Isotope name read from data set XS.ISO does not match the requested name.

302 - A fissionable isotope on XS.ISO uses the set fission spectrum but the set fission spectrum does not exist.

20301 - Unexpected end of file on data set XS.ISO.

20302 - Unexpected end of file on data set XS.ISO.

30301 - Parity error on data set XS.ISO.

30302 - Parity error on data set XS.ISO.

Subroutine RWISOS (DINAM, ILOC, DITBL, ATMDEN, MSPEC, DIMIX, DMTBL)

1. Arguments

Name	Type	Dimension	Definition
DINAM	R*8	NISO	Contains the names of all the isotopes on XS.ISO
ILOC	I*4	NFISO	Contains the number of records to skip from the begnining of the second file of XS.ISO to access a given isotope record

Name	Type	Dimension	Definition
DITBL	R*8	NISO2	Contains the distinct isotope names appearing in DIMIX
ATMDEN	R*8	MSLTH	Contains the atom densities of isotopes in a given material
MSPEC	I*4	NMAT	Contains the number of isotopes used to define a given material
DIMIX	R*8	MSCTH	Contains all the names of isotopes used in defining all the materials
DMTBL	R*8	NMAT	Contains all the distinct names of the defined materials

2. Common Blocks

/ARRAY/

Variables used from this common block

Name	Type	Definition
A(10000)	R*8	Container array for the variably dimensioned arrays

/ARRAY1/

Variables used from this common block

Name	Type	Definition
DVV1	R*8	Contains the characters VV1

/DSNAM1/

Variables used from this common block

Name	Type	Definition
DNAM10	R*8	Contains the characters SCR002

/DSNUM1/

Variables used from this common block

Name	Type	Definition
NUM2	I*4	Data set reference number (DSRN) of B.HOMOG
NUM4	I*4	DSRN of XS.ISO
NUM5	I*4	DSRN of XS.ISO2
NUM9	I*4	DSRN of SCR001
NUM10	I*4	DSRN of SCR002

/ISO1/

Variables used from this common block

Name	Type	Definition
LEL	I*4	Order of elastic scattering plus one for a given isotope
LIN	I*4	Order of inelastic scattering plus one for a given isotope
LN2N	I*4	Order of N2N scattering plus one for a given isotope
IDN	I*4	Maximum number of groups of downscattering for a given isotope
IUP	I*4	Maximum number of groups of upscattering for a given isotope
NISO	I*4	Number of isotopes on data set XS.ISO
NISO2	I*4	Number of isotopes on data set XS.ISO2

/MAT1/

Variables used from this common block

Name	Type	Definition
LELM	I*4	Order of elastic scattering plus one for a given material

Name	Type	Definition
LINM	I*4	Order of inelastic scattering plus one for a given material
LN2NM	I*4	Order of N2N scattering plus one for a given material
MSLTH	I*4	Number of material names in the array DMMIX
MAXUP	I*4	Maximum number of groups of upscattering for this material
MAXDN	I*4	Maximum number of groups of downscattering for this material
MLNO	I*4	Maximum order of scattering plus one for a given material
MAXLNO	I*4	Equal to the maximum order of scattering plus one for the materials on the material data sets
MAXSCT	I*4	Equal to MAXUPG plus one
NMAT	I*4	Number of materials on the material data set
NFMAT	I*4	Number of fissionable materials on XS.M.MIN
NUMANI	I*4	Number of materials with an isotropic scattering on data set XS.M.ANI

/FLAGS/

Variables used from this common block

Name	Type	Definition
ISCHI	I*4	Isotope set fission spectrum flag: ISCHI=0, if there is no isotope set fission spectrum ISCHI=1, if the isotope set fission spectrum is a vector ISCHI=NGROUP if the isotope set fission spectrum is a matrix

Name	Type	Definition
ICHI	I*4	Isotope fission spectrum flag: ICHI=0, if this isotope has no fission spectrum ICHI=-1, if this isotope uses the set fission spectrum ICHI=1, if this isotope has a fission spectrum vector ICHI=NGROUP, if this isotope has a fission spectrum matrix
MSCHI	I*4	Material set prompt fission spectrum flag: MSCHI=0, if there is no material set fission spectrum MSCHI=1, if the material set fission spectrum is a vector MSCHI=NGROUP, if the material set fission spectrum is a matrix
MCHI	I*4	Prompt material fission spectrum flag: MCHI=0, if this material has no fission spectrum MCHI=-1, if this material uses the set fission spectrum MCHI=1, if this material has a fission spectrum vector MCHI=NGROUP, if this material has a fission spectrum matrix
QCVT	I*4	Flag: QCVT=0, if all the fission spectrums are identical vectors QCVT=1, if the fission spectrum vectors must be converted to fission spectrum matrices
QCHK	I*4	Flag: QCHK=0, if RWISOS is to skip the call to CHKCHI

/MISC/

Variables used from this common block

Name	Type	Definition
NGROUP	I*4	Number of energy groups for the cross section set on XS.ISO
IOLDCH	I*4	Temporary pointer for the variably dimensioned array SETCHI
IZICHI	I*4	Temporary pointer for the variably dimensioned array ZICHI

3. Local Variables

Name	Type	Definition
I	I*4	Temporary index used in reading DIMIX, ATMDEN, MSPEC, DITBL, and DMTBL from B.HOMOG
K	I*4	Isotope index in XS.ISO2 and index for isotopes in material
N	I*4	Isotope index in XS.ISO and material index in forming of materials
K1	I*4	Initially zero - used to form maximum MAXO(K1,MAXUP)
K2	I*4	Initially zero - used to form maximum MAXO(K2,MAXDN)
L1	I*4	2* pointer to DVV1 which is pointer to the first position of DVV1 used to read integers in record type 3 of XS.ISO. Also used to count isotopes on XS.ISO
L3	I*4	Index of first member of CHI array read into A
L4	I*4	Temporary index on last member of CHI read from XS.ISO into A
L5	I*4	Temporary flag used to show a record has been read from SCR001

Name	Type	Definition
NREC	I*4	Number of records to be skipped to get to next isotope
DINME	R*8	Used to check the isotope name on SCR001 with those in the array DIMIX

4. Functions and tasks performed by this subroutine

RWISOS contains the loop for the reading of the second file of XS.ISO(XS.ISO2). It is called by MIXMT1.

RWISO is called to read the data for the current isotope from XS.ISO(XS.ISO2).

5. Subprograms called by this subroutine

IGET (entry in POINTR)
RWISO
SNIFF (ARC System module)
CHKCHI
ERROUT
SKPREC

6. Subprograms calling this subroutine

MIXMT1

7. Error messages generated by this subroutine

201 or 251 - Not all of the requested isotopes were found on data set XS.ISO

202 - Isotope name in mix table does not appear in name table.

203 - Isotope name read from data set SCR001 does not match the requested name.

20201 - Unexpected end of file on data set XS.ISO.

20202 - Unexpected end of file on data set XS.ISO2.

20203 - Unexpected end of file on data set XS.ISO2.

20204 - Unexpected end of file on data set B.HOMOG.

20205 - Unexpected end of file on data set SCR001.

20206 - Unexpected end of file on data set SCR001.

20207 - Unexpected end of file on data set SCR001.

20208 - Unexpected end of file on data set XS.ISO2.

30201 - Parity error on data set XS.ISO.

30202 - Parity error on data set XS.ISO2.

30203 - Parity error on data set XS.ISO2.

30204 - Parity error on data set B.HOMOG.

30205 - Parity error on data set SCR001.

30206 - Parity error on data set SCR001.

30207 - Parity error on data set SCR001.

30208 - Parity error on data set XS.ISO2.

Subroutine RWIXS (ZIXS)

1. Arguments

Name	Type	Dimension	Definition
ZIXS	R*8	LENGTH	Contains the non-scattering cross sections for a given isotope and a given group

2. Common Blocks

/ARRAY/

Variables used from this common block

Name	Type	Definition
A(10000)	R*8	Container array for the variably dimensioned arrays

/ARRAY1/

Variables used from this common block

Name	Type	Definition
DVV1	R*8	Contains the characters VV1

/DSNUM1/

Variables used from this common block

Name	Type	Definition
NUM4	I*4	DSRN of XS.ISO
NUM5	I*4	DSRN of XS.ISO2

/ISO1/

Variables used from this common block

Name	Type	Definition
LEL	I*4	Order of elastic scattering plus one for a given isotope
LIN	I*4	Order of inelastic scattering plus one for a given isotope
LN2N	I*4	Order of N2N scattering plus one for a given isotope
LELUP	I*4	Number of groups of elastic upscattering for a given isotope, order and group
LELDN	I*4	Number of groups of elastic downscattering for a given isotope, order and group
LINUP	I*4	Number of groups of inelastic upscattering for a given isotope, order and group
LINDN	I*4	Number of groups of inelastic downscattering for a given isotope, order and group
LN2NUP	I*4	Number of groups of N2N upscattering for a given isotope, order and group

Name	Type	Definition
LN2NUP	I*4	Number of groups of N2N downscattering for a given isotope, order and group
IDN	I*4	Maximum number of groups of downscattering for a given isotope
IUP	I*4	Maximum number of groups of upscattering for a given isotope

/MISC/

Variables used from this common block

Name	Type	Definition
LENGTH	I*4	Length of the non-scattering cross section record for isotope DITBL
NGROUP	I*4	Number of energy groups for the cross section set in XS.ISO

3. Local Variables

Name	Type	Definition
I	I*4	Index over scattering order
J	I*4	Index over groups
J1	I*4	Group number from data set
L1	I*4	Maximum order of scattering
L2	I*4	Temporary for POINTR error routine

4. Functions and tasks performed by this subroutine

RWIXS reads the cross section data from XS.ISO (XS.ISO2) and, if XS.ISO is input, writes it onto XS.ISO2. It is called by RWISO.

The non-scattering cross section data is read from XS.ISO(XS.ISO2), and, if XS.ISO is input, written onto XS.ISO2.

RWUPDN is called to read the scattering cross section data from XS.ISO (XS.ISO2) and, if XS.ISO is input, to write it onto XS.ISO2.

5. Subprograms called by this subroutine

IGET (entry in POINTR)
ERROUT
RWUPDN

6. Subprograms calling this subroutine

RWISO

7. Error messages generated by this subroutine

401 - Group number just read from XS.ISO does not correspond to the current group number.

402 - The container array has overflowed.

20401 - Unexpected end of file on data set XS.ISO.

20402 - Unexpected end of file on data set XS.ISO.

30401 - Parity error on data set XS.ISO.

30402 - Parity error on data set XS.ISO.

Subroutine RWSBLK (DINAM, ILOC, E, U, VEL)

1. Arguments

Name	Type	Dimension	Definition
DINAM	R*8	NISO	Contains the names of all the isotopes on XS.ISO
ILOC	I*4	NFISO	Contains the number of records to skip from the beginning of the second file of XS.ISO to access a given isotope record
E	R*8	NGRP1	Contains the energy limit for each group

Name	Type	Dimension	Definition
U	R*8	NGRP1	Contains the lethargy limit for each group
VEL	R*8	NGROUP	Contains the velocities for each group

2. Common Blocks

/ARRAY/

Variables used from this common block

Name	Type	Definition
A(10000)	R*8	Container array for the variably dimensioned arrays

/ARRAY1/

Variables used from this common block

Name	Type	Definition
DSETCH	R*8	Contains the characters SETCHI

/DSNUM1/

Variables used from this common block

Name	Type	Definition
NUM4	I*4	DSRN of XS.ISO read
NUM5	I*4	DSRN of XS.ISO written

/ISO1/

Variables used from this common block

Name	Type	Definition
NISO	I*4	Number of isotopes on data set XS.ISO

/FLAGS/

Variables used from this common block

Name	Type	Definition
ISCHI	I*4	Isotope set fission spectrum flag: ISCHI=0, if there is no isotope set fission spectrum ISCHI=1, if the isotope set fission spectrum is a vector ISCHI=NGROUP, if the isotope set fission spectrum is a matrix

/MISC/

Variables used from this common block

Name	Type	Definition
NGROUP	I*4	Number of energy groups for the cross section set on XS.ISO
NGRP1	I*4	Equal to NGROUP plus one

3. Local Variables

Name	Type	Definition
I	I*4	Index on number of groups. Also number of isotopes. Also on elements of record written.

4. Functions and tasks performed by this subroutine

RWSBLK reads the cross section set information from the first file of XS.ISO (XS.ISO2) squeezing blanks from the isotope name and, if XS.ISO is input, writes in onto XS.ISO2. If ISCHI > 0, then it calls RDCHI to read the set fission spectrum from XS.ISO (XS.ISO2) and, if XS.ISO is input, it calls WRITCHI to write the fission spectrum onto XS.ISO2. It is called from MIXMT1.

5. Subprograms called by this subroutine

IGET (entry in POINTR)
RDCHI
ERROUT
SQUEZE (ARC System module)
WRTCHI (entry in RDCHI)

6. Subprograms calling this subroutine

MIXMT1

7. Error messages generated by this subroutine

20601 - Unexpected end of file encountered on data set XS.ISO record type 2, file 1

20602 - Unexpected end of file encountered on XS.ISO record type 3, file 1

30601 - Parity error record type 2, file 1 of data set XS.ISO

30602 - Parity error on record type 3, file 1 of data set XS.ISO

Subroutine RWSCT (L1, L2, L3, HOLL, NUM)

1. Arguments

Name	Type	Dimension	Definition
L1	I*4	--	Order of scattering to be read
L2	I*4	--	Maximum order of scattering arrays
L3	I*4	--	Upper limit of index on number of quantities read
HOLL	R*4	--	Name of array being read
NUM	I*4	--	Data set reference number of set being read

2. Common Blocks

/ARRAY/

Variables used from this common block

Name	Type	Definition
A(10000)	I*4	Large container array

3. Local Variables

Name	Type	Definition
I	I*4	Index on quantities read

4. Functions and tasks performed by this subroutine

Utility routine used to read scattering arrays

5. Subprograms called by this subroutine

PRNTA8

6. Subprograms calling this subroutine

XSISO
XSCAUX
XSMAUX

7. Error messages generated by this subroutine - None

Subroutine RWUPDN (NUP, NDN, VV1)

1. Arguments

Name	Type	Dimension	Definition
NUP	I*4	--	Number of groups of upscattering in the record to be read
NDN	I*4	--	Number of groups of downscattering in the record to be read
VV1	R*8	NUP+NDN+1	Contains the downscattering in the record to be read

2. Common Blocks

/DSNUM1/

Variables used from this common block

Name	Type	Definition
NUM4	I*4	DSRN of XS.ISO
NUM5	I*4	DSRN of XS.ISO2

3. Local Variables

Name	Type	Definition
I	I*4	Index for scattering
L1	I*4	Length of the record to be read

4. Functions and tasks performed by this subroutine

RWUPDN reads the scattering cross sections for a given isotope, order and group from XS.ISO (XS.ISO2) and, if XS.ISO is input, writes them onto XS.ISO2. It is called by RWIXS.

5. Subprograms called by this subroutine

ERROUT

6. Subprograms calling this subroutine

RWIXS

7. Error messages generated by this subroutine

20501 - Unexpected end of file on data set XS.ISO

30501 - Parity error on data set XS.ISO

Subroutine SKPREC (N, NERR, NUMREC)

1. Arguments

Name	Type	Dimension	Definition
N	I*4	--	DSRN of the EBCDIC data set
NERR	I*4	--	Error number to be used in case of an end-of-file or a parity error is encountered
NUMREC	I*4	--	Number of records which are to be skipped

2. Common Blocks - None

3. Local Variables

Name	Type	Definition
I	I*4	Index for skipping records

4. Functions and tasks performed by this subroutine

SKPREC skips NUMREC records on the EBCDIC data set with a data set reference number (DSRN) of N.

5. Subprograms called by this subroutine

ERROUT

6. Subprograms calling this subroutine

FRMMTS
MIXANI
MIXAUX
MIXMIN
MIXMT2
RDISO
RWISOS

7. Error messages generated by this subroutine

20000 + NERR - End of file on data set being read.*

30000 + NERR - Parity error on data set being read.*

Subroutine WCHI (CHI, NUM, NP)

1. Arguments

Name	Type	Dimension	Definition
CHI	R*8	ISCHI*NGROUP	Fission spectrum array to be written
NUM	I*4	--	DSRN where writing takes place
NP	I*4	--	0 - No set wide X 1 - CHI is a vector NGROUP - CHI is a matrix

*See error listing in section 8.

2. Common Blocks

Variables used from this common block

Name	Type	Definition
NGROUP	I*4	Number of energy groups in set

3. Local Variables

Name	Type	Definition
I	I*4	Index on NP, the spectrum flag
J	I*4	Index on number of groups

4. Functions and tasks performed by this subroutine

Utility routine used to write fission spectrums CHI on data sets.

5. Subprograms called by this subroutine - None

6. Subprograms calling this subroutine - None

7. Error messages generated by this subroutine - None

Subroutine XSCANI (NUM)

1. Arguments

Name	Type	Dimension	Definition
NUM	I*4	--	DSRN for XS.C.ANI

2. Common Blocks

/ARRAY/A

Variables used from this common block

Name	Type	Definition
A(10000)	R*8	Large container array used for storing records to be printed

3. Local Variables

Name	Type	Definition
K1	I*4	Upper index of scattering record
NCMP	I*4	Number of compositions in entire set
LASCAT	I*4	Length of scattering list
NGROUP	I*4	Number of energy groups
I	I*4	Index on scattering record in XS.C.ANI
MAXUP	I*4	Maximum number of groups of upscattering in given block
MAXDNG	I*4	Maximum number of groups of downscattering in set
NUMANI	I*4	Number of compositions with anisotropic components
L	I*4	Index on order of anisotropy
LNO	I*4	Scattering order for a given composition
MAXLNO	I*4	Maximum scattering order in set (=1+order of anisotropy)
L1		=L - 1, the order of anisotropy being edited
N	I*4	Index on composition blocks in XS.C.ANI
MAXUPG	I*4	Maximum number of groups of upscattering in set

4. Functions and tasks performed by this subroutine

XSCANI edits data set XS.C.ANI, the anisotropic composition cross section data set.

5. Subprograms called by this subroutine

PRNTA (entry in PRNTA8)

6. Subprograms calling this subroutine

HOMOG

7. Error messages generated by this subroutine - None

Subroutine XSCAUX (NUM)

1. Arguments

Name	Type	Dimension	Definition
NUM	I*4	--	DSRN of XS.C.AUX

2. Common Blocks

/ARRAY/A

Variables used from this common block

Name	Type	Definition
A(10000)	R*8	Large container used for storing cross sections

3. Local Variables

Name	Type	Definition
K1	I*4	= 3*NGROUP - length of cross section list in composition block record 2 of XS.C.AUX Also = LSCAT*NGROUP - length of inelastic scattering cross section
LNO	I*4	Maximum scattering order of a given composition
NCMP	I*4	Number of composition in set
NGROUP	I*4	Number of energy groups in set
I	I*4	Index used in reading composition named and cross section lists
L1	I*4	= L -1, the order of anisotropy being edited
LSCAT	I*4	Length of scattering list for a given order and composition
MAXDNG	I*4	Maximum number of downscattering groups
L	I*4	Index on scattering orders and scattering blocks
LEL	I*4	Elastic scattering order of the given composition
NUP	I*4	Number of upscattering groups for a given order and composition

4. Functions and tasks performed by this subroutine

XSCAUX edits the XS.C.AUX data set.

5. Subprograms called by this subroutine

PRNTA8
PRNTA (entry in PRNTA8)
RWSCT

6. Subprograms calling this subroutine

HOMOG

7. Error messages generated by this subroutine - None

Subroutine XSCMIN (NUM)

1. Arguments

Name	Type	Dimension	Definition
NUM	I*4	--	DSRN of XS.C.MIN, minimal composition level cross section data set

2. Common Blocks

/ARRAY/A

Variables used from this common block

Name	Type	Definition
A(10000)	R*8	Large container array into which arrays are read
IA(2500)	I*4	Integer container A(7501) is equivalenced to IA(1)

3. Local Variables

Name	Type	Definition
K3	I*4	Total length of scattering list part of record type 4 in group block
NCMP	I*4	Number of compositions in entire set
NFCMP	I*4	Number of fissionable compsitions
MAXDNG	I*4	Maximum number of groups of downscattering of all compositions in set
I	I*4	Index on composition names. Index on CHI array, index on group block array. Also index on output edited arrays
J1	I*4	Group number quantity in constant list
K4	I*4	Pointer to position in A of first element of array being edited

Name	Type	Definition
NFAM	I*4	Number of families of delayed neutrons
MAXUPG	I*4	Maximum number of groups of upscattering of all compositions in set index on group constant records
J	I*4	Length of CHI spectrum
K1	I*4	=ISCHI*NGROUP, also = 2*NGROUP, length of scattering vector in composition description, also length of constant list in record type 4
XSEC	R*8	Name for Hollerith data quantity being printed
NGROUP	I*4	Number of energy groups
N	I*4	Index on composition block
K2	I*4	Length of entire group block record type 4
ICHI	I*4	Fission spectrum flag for given composition block =-1, uses set CHI, record type 2 =0 , composition not fissionable =1 , vector used in record type 4 =NGROUP, matrix used in record type 4
ISCHI	I*4	Fission spectrum flag = 0, no set wide = 1 record type 2 is a vector = 2 record type 2 is a matrix
LENGTH	I*4	Length of group constant list, record type 4

4. Functions and tasks performed by this subroutine

XSCMIN edits the data set XS.C.MIN

5. Subprograms called by this subroutine

PRNTI4 (entry in PRNTA8)
PRNTA (entry in PRNTA8)
PRNTA8

6. Subprograms calling this subroutine

HOMOG

7. Error messages generated by this subroutine - None

Subroutine XSISO (NUM)

1. Arguments

Name	Type	Dimension	Definition
NUM	I*4	--	DSRN of XS.ISO or XS.ISO2

2. Common Blocks

/ARRAY/

Variables used from this common block

Name	Type	Definition
A(10000)	R*8	Large container array
IA(2500)	I*4	Integer container of LOCA(I) the number of records in file 2 to be skipped in order to read data for file 1. A(7501) is equivalenced to IA(1)

3. Local Variables

Name	Type	Definition
I	I*4	Index on arrays being read from data set XS.ISO
J	I*4	Group index on group constants in record type 4 of XS.ISO2
K	I*4	Index on isotope blocks in XS.ISO2
L	I*4	Index on output scattering order edits

Name	Type	Definition
J1	I*4	Group index quantity in record type 4 of XS.ISO2
K1	I*4	=NGRP+1, the index of the first element in array U(I) the lethargy boundaries =ICHI*NGROUP, the upper index on SETCHI, (I,J) the fission spectrum incident in group I, born in group J. Also = LIN - 1
K2	I*4	=NGRP+2, the index of the first element of VEL(I) the velocity. Also LEL - 1.
K3	I*4	2*NGRP+NGROUP the index of last group constant in record type 4 of XS.ISO2. Also LN2N-1.
L1	I*4	= L-1, scattering order number
LEL	I*4	Maximum order of elastic scattering per isotope
LIN	I*4	Maximum order of inelastic scattering per isotope = 0, None = 1, isotropic = 2, linear anisotropy
ICHI	I*4	Fission flag for isotope; = -1, use CHI for set = 0, non fissionable = 1, not incident energy dependent = NGROUP, incident energy dependent
LN2N	I*4	Maximum order of n,2n scattering
MAXL	I*4	= MAXO(LIN,LEL,LN2N) maximum order of scattering
NISO	I*4	Number of isotopes in this cross section set
LELDN	I*4	Number of elastic downscatter groups
LELUP	I*4	Number of elastic upscatter groups
LINDN	I*4	Number of inelastic upscatter groups
NGRP1	I*4	NGROUP+1, the upper index of the array E(I) the maximum energy

Name	Type	Definition
ISONME	R*8	Name of isotope which edit is given
LENGTH	I*4	Temporary indicating length of array to be read or printed
LN2NDN	I*4	Number of n,2n downscattering group in record type 5 of XS.ISO2
LN2NUP	I*4	Number of n,2n upscatter groups in record type 5 of XS.ISO2
NGROUP	I*4	Number of groups in set

4. Functions and tasks performed by this subroutine

XSISO edits data set XS.ISO.

5. Subprograms called by this subroutine

PRNTA (entry in PRNTA8)
RWSCT
PRNTA8
PRNTI4 (entry in PRNTA8)

6. Subprograms calling this subroutine

HOMOG

7. Error messages generated by this subroutine - None

Subroutine XSMANI (NUM)

1. Arguments

Name	Type	Dimension	Definition
NUM	I*4	--	DSRN of XS.M.ANI

2. Common Blocks

/ARRAY/A

Variables used from this common block

Name	Type	Definition
A(10000)	R*8	Large container array used for storing records to be printed

3. Local Variables

Name	Type	Definition
K1	I*4	LSCAT*NGROUP the length of SCAT(K,J) the anisotropic cross section for order L
NMAT	I*4	Number of materials in entire set
LSCAT	I*4	Length of scattering list for a given material
NGROUP	I*4	Number of energy groups
I	I*4	Index on scattering array in XS.M.ANI
L1	I*4	= L-1, the order of anisotropy being edited
MAXUP	I*4	Maximum number of groups of upscattering for a given material
MAXDNG	I*4	Maximum number of groups of downscattering
NUMANI	I*4	Number of materials with anisotropic components
L	I*4	Index on order of anisotropy (=2,LNO)
LNO	I*4	Scattering order of a given material
MAXLNO	I*4	Maximum scattering order in a set (=1+ order of anisotropy)

Name	Type	Definition
N	I*4	Index on number of material blocks
MAXUPG	I*4	Maximum number of groups of upscattering

4. Functions and tasks performed by this subroutine

XSMANI edits the material level anisotropic cross section data set XS.M.ANI.

5. Subprograms called by this subroutine

PRNTA (entry in PRNTA8)

6. Subprograms calling this subroutine

HOMOG

7. Error messages generated by this subroutine - None

Subroutine XSMAUX (NUM)

1. Arguments

Name	Type	Dimension	Definition
NUM	I*4	--	DSRN of XS.M.AUX the auxiliary material level cross section data set

2. Common Blocks

/ARRAY/A

Variables used from this common block

Name	Type	Definition
A(10000)	R*8	Container array into which cross section records are read

3. Local Variables

Name	Type	Definition
K1	I*4	= 3*NGROUP, length of cross section list in material description block. Also = LSCAT*NGROUP, length of scattering record containing scattering cross sections
LNO	I*4	Maximum scattering order of a given material
NMAT	I*4	Number of materials in set
NGROUP	I*4	Number of groups in set
I	I*4	Index used in reading composition names and cross section lists
L1	I*4	= L-1, the order of anisotropy for material being edited
LSCAT	I*4	Length of scattering list for a given order and material
MAXDNG	I*4	Maximum number of downscattering groups
L	I*4	Index on scattering block
LEL	I*4	Elastic scattering order of a given material
NUP	I*4	Number of groups of upscattering for a given order and material
MAXLNO	I*4	Maximum scattering order in a set (= 1+ order of anisotropy)
N	I*4	Index on number of materials
LIN	I*4	Inelastic scattering order for a given material
LN2N	I*4	(n,2n) scattering order of a given material
MAXUPG	I*4	Maximum number of upscattering groups

4. Functions and tasks performed by this subroutine

XSMAUX edits the XS.M.AUX data set

5. Subprograms called by this subroutine

PRNTA8
PRNTA (entry in PRNTA8)
RWSCT

6. Subprograms calling this subroutine

HOMOG

7. Error messages generated by this subroutine - None

Subroutine XSMMIN (NUM)

1. Arguments

Name	Type	Dimension	Definition
NUM	I*4	--	DSRN of XS.M.MIN the minimal composition level cross section data set

2. Common Blocks

/ARRAY/A

Variables used from this common block

Name	Type	Definition
A(10000)	R*8	Large container array
A(2500)	I*4	Integer container A(7501) is equivalenced to IA(1)

3. Local Variables

Name	Type	Definition
K3	I*4	Length of scattering lists in group lists in group block

Name	Type	Definition
NFAM	I*4	Number of families of delayed neutrons
NFMAT	I*4	Number of fissionable materials
MAXDNG	I*4	Maximum numbers of group of downscattering of all materials in set
I	I*4	Index on composition names; also index on CHI array; also index on group block array; also index on arrays edited
J1	I*4	Group number quantity in group constant list
K4	I*4	Pointer to position in A of first element of array being edited
NMAT	I*4	Number of materials in entire set
MAXUPG	I*4	Maximum number of groups of upscattering of all materials in set
J	I*4	Index on group constant records
K1	I*4	ISCHI*NGROUP, length of CHI spectrum; also = 2*NGROUP, length of scattering vector in material description; also = length of constant list in record type 4
XSEC	R*8	Name for Hollerith data being printed
NGROUP	I*4	Number of energy groups
N	I*4	Index on material block
K2	I*4	Length of entire group block record type 4
ICHI	I*4	Fission spectrum flag for given material block: = -1, set uses X in record type 2 = NGROUP, X matrix is used in record type 4
ISCHI	I*4	Fission spectrum flag: = 0, no set wide X = 1, record type 2 is a vector = 2, record type 2 is a matrix
LENGTH	I*4	Length of group constant list in type 4 record

4. Functions and tasks performed by this subroutine

Edits data set XS.M.MIN.

5. Subprograms called by this subroutine

PRNTI4 (entry in PRNTA8)
PRNTA (entry in PRNTA8)
PRNTA8

6. Subprograms called by this subroutine

HOMOG

7. Error messages generated by this subroutine - None

Subroutine VTOMTX (CHI, N1, N2)

1. Arguments

Name	Type	Dimension	Definition
CHI	R*8	NGROUP*NGROUP	The fission spectrum
N1	I*4	--	Equal to NGROUP
N2	I*4	--	Set equal to NGROUP

2. Common Blocks

/MISC/

Variables used from this common block

Name	Type	Definition
NGROUP	I*4	Number of energy groups for the cross section set on XS.ISO

3. Local Variables

Name	Type	Definition
J	I*4	Group index on CHI
K	I*4	Group index on CHI

4. Functions and tasks performed by this subroutine

VTOMTX is called by FRMMTS and RDISO to convert a fission spectrum vector to a fission spectrum matrix.

5. Subprograms called by this subroutine - None

6. Subprograms calling this subroutine

FRMMTS

7. Error messages generated by this subroutine - None

Subroutine WRTMIN (J, XA, XTOT, XREM, STR, XFIS, XFISNU, ZMCHI, XSCT, PXFISN, ZDMCHI, NGRP)

1. Arguments

Name	Type	Dimension	Definition
J	I*4	--	Current group number
XA	R*8	--	The absorption cross section for a given material and group
XTOT	R*8	--	Total cross section for a given material and group
XREM	R*8	--	The removal cross section for a given material and group

Name	Type	Dimension	Definition
STR	R*8	NGROUP	The transport cross section for a given material
XFIS	R*8	NGROUP	The fission cross section for a given material
XFISNU	R*8	NGROUP	The nu times fission cross section for a given material
ZMCHI	R*8	MCHI*NGROUP	The fission spectrum for a given material
XSCT	R*8	LASCTP*NGROUP	The total scattering cross section for a given material
PXFISN	R*8	NGROUP	The prompt fission reaction rate for a given material
ZDMCHI	R*8	NGROUP*NFAM	The prompt fission spectrum for a given material
NGRP	I*4	--	Equal to NGROUP

2. Common Blocks

/MAT1/

Variables used from this common block

Name	Type	Definition
LSCAT1	I*4	Length of the scattering cross section record for a given material written onto XS.M.MIN

/DSNUM1/

Variables used from this common block

Name	Type	Definition
NUM3	I*4	DSRN of XS.DELAY
NUM8	I*4	DSRN of XS.M.MIN

/FLAGS/

Variables used from this common block

Name	Type	Definition
MCHI	I*4	Material prompt fission spectrum flag: MCHI=0, if this material has no fission spectrum MCHI=-1, if this material uses the set fission spectrum MCHI=1, if this material has a fission spectrum vector MCHI=NGROUP, if this material has a fission spectrum matrix

/DELAY1/

Variables used from this common block

Name	Type	Definition
NFAM	I*4	Number of families of delayed neutrons

3. Local Variables

Name	Type	Definition
I	I*4	Writing index

4. Functions and tasks performed by this subroutine

WRTMIN is called by FRMMAT to write the cross section records onto XS.M.MIN.

5. Subprograms called by this subroutine - None

6. Subprograms calling this subroutine

FRMMAT

7. Error messages generated by this subroutine - None

5. HOMOG (NUC001) Common Block Descriptions

This section provides more detailed information about the common blocks used by the HOMOG (NUC001) subprograms. The common blocks appear in alphabetical order by name.

For each common block, all variables are listed in order of appearance in the block by name and type, and the definition of each is given. In addition, there appears for each variable a list of the subprograms in which the value of the variable is set or altered.

A special case is the /ARRAY/ common block, which contains the container array A used by the dyanmic storage allocation module POINTR (See ANL-7711 of this series.) Section 6 contains a list of the names of all arrays which may be defined in the container array at any point in the exeuction of the module.

/ALFNM1/

Name	Type	Subprograms where values are set or modified	Definition
DBLANK	R*8	BLOCK DATA	Blank characters
QZERO	I*4	BLOCK DATA	Contains the integer 0

/ARRAY/

Name	Type	Subprograms where values are set or modified	Definition
A(10000)	R*8	POINTR XSISO RWSCT BHOMOG XSCANI XSMANI XSCAUX XSMAUX XSCMIN XSMMIN MIXANI MIXMT1 RWISOS RWISO RWIXS RWSBLK MIXMT2 FRMMTS RDISO FRMMAT FRMSCT MIXAUX	Container array for the variably dimensioned arrays
IA(2500)	I*4	POINTR XSISO BHOMOG XSCMIN XSMMIN	Temporary storage for integer arrays A(7501) is equivalenced to AI(1)

/ARRAY1/

Name	Type	Subprograms where values are set or modified	Definition
DANISO	R*8	BLOCK DATA	Contains the characters ANISO
DATMDE	R*8	BLOCK DATA	Contains the characters ATMDEN
DCHI	R*8	BLOCK DATA	Contains the characters CHI
DCSCAT	R*8	BLOCK DATA	Contains the characters CSCAT
DDDINA	R*8	BLOCK DATA	Contains the characters DDINAM
DDIMIX	R*8	BLOCK DATA	Contains the characters DIMIX
DDINAM	R*8	BLOCK DATA	Contains the characters DINAM
DDITBL	R*8	BLOCK DATA	Contains the characters DITBL
DDMTBL	R*8	BLOCK DATA	Contains the characters DMTBL
DE	R*8	BLOCK DATA	Contains the character E
DILOC	R*8	BLOCK DATA	Contains the characters ILOC
DLNDN	R*8	BLOCK DATA	Contains the characters LNDN
DLNUP	R*8	BLOCK DATA	Contains the characters LNUP
DDMMIX	R*8	BLOCK DATA	Contains the characters DMMIX
DMNDN	R*8	BLOCK DATA	Contains the characters MNDN
DMNUP	R*8	BLOCK DATA	Contains the characters MNUP
DMSPEC	R*8	BLOCK DATA	Contains the characters MSPEC
DNDN	R*8	BLOCK DATA	Contains the characters NDN
DNUP	R*8	BLOCK DATA	Contains the characters NUP
DPXFIS	R*8	BLOCK DATA	Contains the characters PXFISN
DPXFN	R*8	BLOCK DATA	Contains the characters PXFN
DQCSPE	R*8	BLOCK DATA	Contains the characters QCSPEC

Name	Type	Subprograms where values are set or modified	Definition
DQDLOC	R*8	BLOCK DATA	Contains the characters QDLOC
DREM	R*8	BLOCK DATA	Contains the characters REM
DSCAP	R*8	BLOCK DATA	Contains the characters SCAP
DSCAT	R*8	BLOCK DATA	Contains the characters SCAT
DSENR	R*8	BLOCK DATA	Contains the characters SENR
DSETCH	R*8	BLOCK DATA	Contains the characters SETCHI
DSINR	R*8	BLOCK DATA	Contains the characters SINR
DSNALF	R*8	BLOCK DATA	Contains the characters SNALF
DSNP	R*8	BLOCK DATA	Contains the characters SNP
DSN2NR	R*8	BLOCK DATA	Contains the characters SN2NR
DSTR	R*8	BLOCK DATA	Contains the characters STR
DU	R*8	BLOCK DATA	Contains the character U
DVV1	R*8	BLOCK DATA	Contains the characters VV1
DVOLFR	R*8	BLOCK DATA	Contains the characters VOLFRC
DVEL	R*8	BLOCK DATA	Contains the characters VEL
DXA	R*8	BLOCK DATA	Contains the characters XS
DXEL	R*8	BLOCK DATA	Contains the characters XEL
DXFIS	R*8	BLOCK DATA	Contains the characters XFIS
DXFISN	R*8	BLOCK DATA	Contains the characters XFISNU
DXFN	R*8	BLOCK DATA	Contains the characters XFN
DXINEL	R*8	BLOCK DATA	Contains the characters XINEL
DXN2N	R*8	BLOCK DATA	Contains the characters XN2N
DXREM	R*8	BLOCK DATA	Contains the characters XREM

Name	Type	Subprograms where values are set or modified	Definition
DXSCT	R*8	BLOCK DATA	Contains the characters XSCT
DXTER	R*8	BLOCK DATA	Contains the characters XTER
DXTIR	R*8	BLOCK DATA	Contains the characters XTIR
DXTN2N	R*8	BLOCK DATA	Contains the characters XTN2NR
DXTOT	R*8	BLOCK DATA	Contains the characters XTOT
DZDMCH	R*8	BLOCK DATA	Contains the characters ZDMCHI
DZDNCH	R*8	BLOCK DATA	Contains the characters ZDNCHI
DZONFR	R*8	BLOCK DATA	Contains the characters ZDNFRC
DZDNYL	R*8	BLOCK DATA	Contains the characters ZDNYLD
DZICHI	R*8	BLOCK DATA	Contains the characters ZICHI
DZIXS	R*8	BLOCK DATA	Contains the characters ZIXS
DZMCHI	R*8	BLOCK DATA	Contains the characters ZMCHI

/ARRAY3/

Name	Type	Subprograms where values are set or modified	Definition
DDCTBL	R*8	BLOCK DATA	Contains the characters DCTBL

/COMP1/

Name	Type	Subprograms where values are set or modified	Definition
LELC	I*4	MIXAUX	Maximum order plus one of the elastic scattering cross sections for a given composition on XS.C.AUX

Name	Type	Subprograms where values are set or modified	Definition
LINC	I*4	MIXAUX	Maximum order plus one of the inelastic scattering cross sections for a given composition on XS.C.AUX
LN2NC	I*4	MIXUAX	Maximum order of N2N scattering for a given composition
LASCT1	I*4	MIXANI	Length of the scattering vector for a given anisotropic composition
LSCT1	I*4	RWAUX MIXAUX	Length of the scattering cross section vector for a given composition on XS.C.AUX
MAXUP1	I*4	MIXANI	Maximum number of groups of up-scattering for the anisotropic compositions
NCMP	I*4	HOMOG	Number of composition names in the array DCTBL
NFCMP	I*4	MIXMIN	Number of fissionable compositions on XS.C.MIN
NUP1	I*4	MIXAUX RWAUX	The number of groups of upscattering for a given composition on XS.C.AUX
NUMAN1	I*4	MIXANI	Number of anisotropic compositions on XS.C.ANI
QCSLTH	I*4	HOMOG	Number of material names in the array DMMIX
QCLNO	I*4	MIXANI MIXAUX	Maximum order of scattering plus one for the anisotropic compositions

/DELAY1/

Name	Type	Subprograms where values are set or modified	Definition
NFAM	I*4	HOMOG MIXMT2	Number of families of delayed neutrons
NFISO	I*4	MIXMT2	Number of fissionable isotopes with delayed neutrons

/DSNAM1/

Name	Type	Subprograms where values are set or modified	Definition
DNAM2	R*8	BLOCK DATA	Contains the characters B.HOMOG
DNAM3	R*8	BLOCK DATA	Contains the characters XS.DELAY
DNAM4	R*8	BLOCK DATA	Contains the characters XS.ISO
DNAM5	R*8	BLOCK DATA	Contains the characters XS.ISO2
DNAM6	R*8	BLOCK DATA	Contains the characters XS.M.ANI
DNAM7	R*8	BLOCK DATA	Contains the characters XS.M.AUX
DNAM8	R*8	BLOCK DATA	Contains the characters XS.M.MIN
DNAM9	R*8	BLOCK DATA	Contains the characters SCR001
DNAM10	R*8	BLOCK DATA	Contains the characters SCR002
DNAM11	R*8	BLOCK DATA	Contains the characters XS.C.ANI
DNAM12	R*8	BLOCK DATA	Contains the characters XS.C.AUX
DNAM13	R*8	BLOCK DATA	Contains the characters XS.C.MIN
DNAM14	R*8	BLOCK DATA	Contains the characters XS.C.AN1
DNAM15	R*8	BLOCK DATA	Contains the characters XS.C.AU1
DNAM16	R*8	BLOCK DATA	Contains the characters XS.C.MI1

/DSNUM1/

Name	Type	Subprograms where values are set or modified	Definition
NUM2	R*8	HOMOG	DSRN of B.HOMOG
NUM3	R*8	MIXMT1 MIXMT2	DSRN of XS.DELAY
NUM4	R*8	MIXMT1 MIXMT2	DSRN of XS.ISO
NUM5	R*8	MIXMT1	DSRN of XS.ISO2

Name	Type	Subprograms where values are set or modified	Definition
NUM6	R*8	HOMOG MIXMT2	DSRN of XS.M.ANI
NUM7	R*8	HOMOG MIXMT2	DSRN of XS.M.AUX
NUM8	R*8	HOMOG MIXMT2	DSRN of XS.M.MIN
NUM9	R*8	RWISO	DSRN of SCR001
NUM10	R*8	RWISOS	DSRN of SCR002
NUM11	R*8	HOMOG	DSRN of XS.C.ANI or XS.C.AN1
NUM12	R*8	HOMOG	DSRN of XS.C.AUX or XS.C.AU1
NUM13	R*8	HOMOG	DSRN of XS.C.MIN or XS.C.MI1

/FLAGS/

Name	Type	Subprograms where values are set or modified	Definition
ISCHI	I*4	RWISOS RWSBLK	Isotope set fission spectrum flag: ISCHI=0, if there is no isotope set fission spectrum ISCHI=1, if the isotope set fission spectrum is a vector ISCHI=NGROUP, if the isotope set fission spectrum is a matrix
ICHI	I*4	RWISOS RWISO RDISO	Isotope fission spectrum flag: ICHI=0, if this isotope has no fission spectrum ICHI=-1, if this isotope uses the set fission spectrum ICHI=1, if this isotope has a fission spectrum vector ICHI=NGROUP, if this isotope has a fission spectrum matrix

Name	Type	Subprograms where values are set or modified	Definition
MSCHI	I*4	HOMOG RWISOS MIXMT2	Prompt material set fission spectrum flag: MSCHI=0, if there is no material set fission spectrum MSCHI=1, if the material set fission spectrum is a vector MSCHI=NGROUP, if the material set fission spectrum is a matrix
MCHI	I*4	RWISOS FRMMTS MIXMIN	Prompt material fission spectrum flag: MCHI=0, if this material has no fission spectrum MCHI=-1, if this material uses the set fission spectrum MCHI=1, if this material has a fission spectrum vector MCHI=NGROUP, if this material has a fission spectrum matrix
QCSCHI	I*4	HOMOG	Prompt composition set fission spectrum flag: QCSCHI=0, if there is no composition set fission spectrum QCSCHI=1, if the composition set fission spectrum is a vector QCSCHI=NGROUP, if the composition set fission spectrum is a matrix
QCCHI	I*4	MIXMIN	Prompt composition fission spectrum flag: QCCHI=0, if the composition is non-fissionable QCCHI=1, if this composition has a fission spectrum vector QCCHI=NGROUP, if this composition has a fission spectrum matrix QCCHI=-1, if this composition uses the set fission spectrum

Name	Type	Subprograms where values are set or modified	Definition
QCVT	I*4	RWISOS CHKCHI	Flag: QCVT=0, if all the fission spectrums are identical vectors QCVT=1, if the fission spectrum vectors must be converted to fission spectrum matrices
QEND	I*4	MIXANI FRMMTS MIXAUX MIXMIN	Flag: QEND=0, if this is not the last isotope used in this material QEND=1, if this is the last isotope used in this material
QCHK	I*4	MIXMT1 RWISOS	Flag: QCHK=0, if RWISOS is to skip the call to CHKCHI QCHK=1, if RWISOS is to call CHKCHI
QDELAY	I*4	RDISO	Flag: QDELAY=0, if there are no delayed neutrons QDELAY=1, if there are delayed neutrons

/HMGTIM/

Name	Type	Subprograms where values are set or modified	Definition
TIME1	R*4	HOMOG	Initial time used to calculate the execution time in entire module
TIME2	R*4	HOMOG	The earlier time used to calculate the execution time in a module substep or segment
TIME3	R*4	HOMOG	The later time used to calculate the execution time in a module substep or segment

/ISO1/

Name	Type	Subprograms where values are set or modified	Definition
LEL	I*4	RWISOS RWISO RDISO	Order of elastic scattering plus one for a given isotope
LIN	I*4	RWISOS RWISO RDISO	Order of inelastic scattering plus one for a given isotope
LN2N	I*4	RWISOS RWISO RDISO	Order of N2N scattering plus one for a given isotope
LELUP	I*4	RWIXS FRMSCT	Number of groups of elastic upscattering for a given isotope order and group
LELDN	I*4	RWIXS FRMSCT	Number of groups of elastic downscattering for a given isotope order and group
LINUP	I*4	RWIXS FRMSCT	Number of groups of inelastic upscattering for a given isotope, order and group
LINDN	I*4	RWIXS FRMSCT	Number of groups of inelastic downscattering for a given isotope order and group
LN2NUP	I*4	RWIXS FRMSCT	Number of groups of N2N upscattering for a given isotope, order and group
IDN	I*4	RWISOS RWIXS RWISO	Maximum number of groups of downscattering for a given isotope
IUP	I*4	RWISOS RWIXS RWISO	Maximum number of groups of up-scattering for a given isotope

Name	Type	Subprograms where values are set or modified	Definition
ILNO	I*4	RDISO	The maximum of LIN, LEL, and LN2N
NISO	I*4	MIXMT1	Number of isotopes on data set XS.ISO
NISO2	I*4	MIXMT1	Number of isotopes on data set XS.ISO2

/MAT1/

Name	Type	Subprograms where values are set or modified	Definition
LASCAT	I*4	MIXANI FRMMTS	The scattering vector length for a given material and order
LSCAT1	I*4	MIXANI FRMMAT	Length of the scattering cross section list for a given material and written onto XS.M.MIN
LSCAT2	I*4	FRMMAT	Length of the scattering cross section list for a given material and scattering order written onto XS.M.AUX
LELM	I*4	RWISOS FRMMTS MIXAUX	Order of elastic scattering plus one for a given material
LINM	I*4	RWISOS FRMMTS MIXAUX	Order of inelastic scattering plus one for a given material
LN2NM	I*4	RWISOS FRMMTS MIXAUX	Order of N2N scattering plus one for a given material
MSLTH	I*4	MIXMT1	Number of material names in the array DMMIX

Name	Type	Subprograms where values are set or modified	Definition
MAXUP	I*4	MIXANI MIXAUX MIXMIN RWISOS FRMMTS	Maximum number of groups of upscattering for a given material
MAXDN	I*4	RWISOS MIXMIN FRMMTS MIXAUX	Maximum number of groups of down-scattering for a given material
MLNO	I*4	MIXANI RWISOS MIXAUX	Maximum order of scattering plus one for a given material
MAXLNO	I*4	HOMOG RWISOS	Equal to the maximum order of scattering plus one for the materials data sets
MAXSCT	I*4	HOMOG RWISOS	Equal to MAXUPG plus MAXDNG+1
NMAT	I*4	HOMOG MIXMT1	Number of materials on the materials data sets
NFMAT	I*4	HOMOG RWISOS	Number of fissionable materials on XS.M.MIN
NUMANI	I*4	HOMOG RWISOS	Number of materials with anisotropic scattering on data set XS.M.ANI

/MAT2/

Name	Type	Subprograms where values are set or modified	Definition
QANI	I*4	HOMOG	Flag set to the DSRN of XS.M.ANI equal to N2: QANI=0, XS.M.ANI is not formed QANI≠0, XS.M.ANI is formed

Name	Type	Subprograms where values are set or modified	Definition
QAUX	I*4	HOMOG	Flag set to the DSRN of XS.M.AUX, equal to N3: QAUX=0, XS.M.AUX is not formed QAUX≠0, XS.M.AUX is formed
QMIN	I*4	HOMOG	Flag set to the DSRN of XS.M.MIN equal to N3: QMIN=0, no XS.M.MIN is formed QMIN≠0, XS.M.MIN is formed

/MISC/

Name	Type	Subprograms where values are set or modified	Definition
LENGTH	I*4	RWISO RDISO	Length of the principal non-scattering cross section record for a given isotope on XS.ISO2
NGROUP	I*4	HOMOG MIXMT1	Number of energy groups for the cross section set on XS.ISO
IOLDCH	I*4	MIXMT1 RWISOS	Temporary pointer for the variably dimensioned array SETCHI
IZICHI	I*4	MIXMT1 RWISOS	Temporary pointer for the variably dimensioned array ZICHI
LSTLOC	I*4	HOMOG MIXMT1 MIXMT2	Last used location of the container array A
NGRP1	I*4	MIXMT1	Equal to NGROUP plus one
IVV1	I*4	FRMSCT	The pointer for the variably dimensioned array VV1
NUP	I*4	RWAUX	Number of groups of upscattering for a given material and order on XS.M.AUX

Name	Type	Subprograms where values are set or modified	Definition
LSCAT	I*4	RWAUX	Length of the scattering cross section vector for a given material and order on XS.M.AUX

/MISC2/

Name	Type	Subprograms where values are set or modified	Definition
MAXUPG	I*4	HOMOG	Maximum number of groups of up-scattering on the material data sets
MAXDNG	I*4	HOMOG	Maximum number of groups of down-scattering on the material data sets

/MSIZE/

Name	Type	Subprograms where values are set or modified	Definition
MAXSIZ	I*4	HOMOG	Maximum size of the container array A

/QREC/

Name	Type	Subprograms where values are set or modified	Definition
QREC	I*4	FRMMTS RDISO	The number of the record at which data set XS.DELAY is currently positioned

6. HOMOG (NUC001) Dynamic Storage Array Allocation

This section describes all arrays which may be defined by this module in common block /ARRAY/A, using the facilities of the dynamic storage allocation module POINTR (See ANL-7711.) The arrays are listed in alphabetical order by the name given them in the POINTR name table. For each array, the following information is given:

1. Type
2. Dimension, in terms of module variables
3. Names of subprograms where action is taken that affects the status of the array in the container, followed in parentheses by the action that is taken in the subprogram. (Here, significant POINTR calls are generally PUTPNT, which allocates space in the container for the array; REDEF, which sets aside space if the array is not present or redefines its space allocation if it is; and WIPOUT, which removes the array from the name table, thus making it inaccessible. The meaning of any other POINTR calls listed can be found in the POINTR documentation.)
4. Names of subprograms in which the value of elements of the array are set or altered.
5. The definition of the array contents.

If the meaning of a variable used as the dimension of an array is not known, it can be found in the subprogram in which a call to PUTPNT or REDEF is made for that array.

Array Name	Type	Dimension	Subprograms issuing significant POINTR calls	Subprograms where values are set or modified	Definition
DANISO	R*8	NGROUP	MIXMT2(PUTPNT)	FRMMTS FRMMAT	Array ANISO - the isotopic elastic self-scattering cross section consistent with the anisotropic total cross-section
DATMDE	R*8	MSLTH	MIXMT1(PUTPNT)	RWISOS	The array ATMDEN, the atomic density table in record type 2 of B.HOMOG. Atomic densities in a given material
DCHI	R*8	NGROUP* NGROUP	HOMOG(PUTPNT)	MIXMIN FINCHI FRMCHI VTOMTX	CHI
DSCAT	R*8	L1*(MAXLNO -1) where L1 = (MAXSIZ - LSTLOC)/ MLNO	HOMOG(PUTPNT) MIXANI(WIPOUT)	RDANI RDSCT1 MIXANI RDMIN	SCAT, temporary name for reading several arrays XINEL, XEL, XN2N
DDCTBL	R*8	NCMP	HOMOG(PUTPNT)	RDSPEC	Array DCTBL, which contains the labels of compositions for record type 4 of B.HOMOG
DDDINA	R*8	NFISO	MIXMT2(PUTPNT)	FRMMTS	DDINAM

Array Name	Type	Dimension	Subprograms issuing significant POINTR calls	Subprograms where values are set or modified	Definition
DE	R*8	NGRP1	MIXMT1 (PUTPNT) MIXMT1 (WIPOUT)	RWSBLK	Array E, the energy boundary array in XS.ISO record 3
DDIMIX	R*8	MSLTH	MIXMT1 (PUTPNT)	RWISOS	Array DIMIX, the mix table in record type 2 of B.HOMOG also contained as DMTABL1 in record type 4 of B.HOMOG
DDINAM	R*8	NISO2	MIXMT1 (PUTPNT) MIXMT2 (REDEF)	RWISOS RWSBLK FRMMTS	Array DINAM - contains the names of all the isotopes on XS.ISO also called array ISONME rec. 2, in B.HOMOG
DDITBL	R*8	NISO2	MIXMT1 (PUTPNT) MIXMT2 (WIPOUT)	RWISOS	Array DITBL, the list of all isotopes used in this module; each label appears once in record type 2 of B.HOMOG
DDMMIX	R*8	QCSLTH	HOMOG (PUTPNT)	RDSPEC	Array DMMIX, the mix table in record type 4 of B.HOMOG
DDMTBL	R*8	NMAT	HOMOG (PUTPNT) HOMOG (WIPOUT) MIXMT1 (PUTPNT)	RDSPEC RWISOS	Contains the array DMTBL, material labels of record type 2 of B.HOMOG, containing distinct names of the defined materials
DILOC	I*4	NISO2 NISO	MIXMT1 (PUTPNT) MIXMT2 (REDEF)	RWSBLK	Array ILOC containing the number of records to skip from the beginning of the second file of XS.ISO to access a given isotope record

Array Name	Type	Dimension	Subprograms issuing significant POINTR calls	Subprograms where values are set or modified	Definition
DLNDN	I*4	MAXLNO	MIXMT2(PUTPNT)	FRMSCT FRMMTS	Array LNDN, the number of groups of downscattering for a given material and group
DLNUP	I*4	MAXLNO	MIXMT2(PUTPNT)	FRMSCT FRMMTS	Array LNUP, the number of groups of upscattering for a given material and group
DMNDN	I*4	NGROUP	MIXMT2(PUTPNT)	FRMSCT FRMMTS	Array MNDN, the number of groups of downscattering for a given material and group, rec. 3, XS.C.MIN
DMNUP	I*4	NGROUP	MIXMT2(PUTPNT)	FRMSCT FRMMTS	Array MNUP, the number of groups of upscattering for a given material and group, rec. 3, XS.C.MIN
DMSPEC	I*4	NMAT	MIXMT1(PUTPNT)	RWISOS	The array MSPEC, the number of isotopes comprising each material - record type 2 of B.HOMOG
DNDN	I*4	NGROUP	HOMOG(PUTPNT)	MIXMIN	Array NDN, the number of groups of downscattering given on all records of type 4 for a given composition
DNUP	I*4	NGROUP	HOMOG(PUTPNT)	MIXMIN	Array NUP the number of groups of upscattering given type 4 records of XS.C.MIN for a given composition

Array Name	Type	Dimension	Subprograms issuing significant POINTR calls	Subprograms where values are set or modified	Definition
DPXFIX	R*8	NGROUP	MIXMT2(PUTPNT)	FRMMAT	Array PXFISN, the prompt fission reaction rate for a given material
DPXFN	R*8	NGROUP	HOMOG(PUTPNT)	MIXMIN RDMIN	PXFN - the number of prompt neutrons emitted per fission times XF
DQDLOC	I*4	NFISO	MIXMT2(PUTPNT)	FRMMTS	Array QDLOC containing the number of records to skip from the beginning of the second file of XS.DELAY to access of a given isotope
DQCSPE	I*4	NCMP	HOMOG(PUTPNT)	RDSPEC	Array MCSPEC the number of materials comprising each composition of records in B.HOMOG
DREM	R*8	NGROUP	HOMOG(PUTPNT) MIXAUX(WIPOUT)	RDSCT1	Array REM read from XS.M.AUX
DSCAP	R*8	NGROUP	HOMOG(PUTPNT) MIXMT2(PUTPNT) MIXAUX(WIPOUT)	MIXAUX FRMMTS FRMMAT	Array SCAP of record type 2 in XS.C.AUX, capture (n,γ) cross section

Array Name	Type	Dimension	Subprograms issuing significant POINTR calls	Subprograms where values are set or modified	Definition
DSCAT	R*8	(MAXSIZ-LSTLOC)/MAXLNO L1*NGROUP MAXSIZ-LSTLOC where L1=(MAXSIZ-LSTLOC)/(4*NGROUP+3)	MIXAUX(WIPOUT) MIXANI(WIPOUT) HOMOG(PUTPNT) HOMOG(PUTPNT) HOMOG(PUTPNT)	RDANI RDSCT1 MIXMIN	Array SCAT(K,J) of record type 3 in XS.C.ANI, total anisotropic cross section for order L into group J from the group indexed by K
DSETCH	R*8	NGROUP*NGROUP NGROUP*NGROUP NGROUP	HOMOG(PUTPNT) MIXMT1(PUTPNT) MIXMT2(REDEF) MIXMT2(WIPOUT)	RDCHI VTOMTX	Array SETCHI - the isotope set fission spectrum
DSENR	R*8	L1	MIXMT2(PUTPNT)	FRMMAT	Array SENR the location removal cross section for a given material
DSINR	R*8	L1	MIXMT2(PUTPNT)	FRMMAT	Array SINR, the inelastic removal cross section for a given material
DSNALF	R*8	NGROUP	HOMOG(PUTPNT) MIXMT2(PUTPNT) MIXAUX(WIPOUT)	FRMMTS MIXAUX	Array SNALF in record type 2 of XS.C.AUX, the (n,α) cross section

Array Name	Type	Dimension	Subprograms issuing significant POINTR calls	Subprograms where values are set or modified	Definition
DSNP	R*8	NGROUP	HOMOG(PUTPNT) MIXMT2(PUTPNT) MIXAUX(WIPOUT)	FRMMTS FRMMAT MIXAUX	Array SNP in record type 2 of XS.C.AUX, the (n,ρ) cross section
DSN2NR	R*8	L1 where L1 = NGROUP or = 0 when MAXLNO=0	MIXMT2(PUTPNT)	FRMMAT	Array SN2NR, the N,2N removal cross section for a given material
DSTR	R*8	NGROUP	MIXMT2(PUTPNT) HOMOG(PUTPNT)	MIXMIN RDMIN FRMMTS FRMMAT	Array STR, the transport cross section for a given material
DU	R*8	NGRP1	MIXMT1(PUTPNT) MIXMT1(WIPOUT)	RWSBLK	Array U, the lethargy limit for each group
DVEL	R*8	NGROUP	MIXMT1(PUTPNT) MIXMT1(WIPOUT)	RWSBLK	Array VEL - the velocities for each group
DVOLFR	R*8	QCSLTH	HOMOG(PUTPNT)	RDSPEC	Array VOLFRC volume fractions in output record type 4 of B.HOMOG

Array Name	Type	Dimension	Subprograms issuing significant POINTR calls	Subprograms where values are set or modified	Definition
DVV1	R*8	MAXSIZ+1 -LSTLOC 3*NGROUP (3+NFAM)* NGROUP+6 MAXSCT	MIXMT1 (PUTPNT) HOMOG (PUTPNT) HOMOG (PUTPNT) MIXMT2 (REDEF) MIXAUX (WIPOUT)	MIXMIN RWUPDN RDSCT MIXAUX RDMIN	Array VV1 used as a temporary buffer into which isotope scattering records are read
DXA	R*8	NGROUP	HOMOG (PUTPNT)	MIXMIN RDMIN FRMMAT	Group absorption cross section quantity XA
DXEL	R*8	L1*NGROUP L1+(MAXSIZ-LSTLOC) /(4*NGROUP+3) MAXSCT* NGROUP* MAXLNO	HOMOG (PUTPNT) MIXMT2 (PUTPNT) MIXUAX (WIPOUT)	MIXAUX RDSCT1 FRMMTS RDSCT	Scattering block array XEL the elastic scattering cross section in record type 5 of XS.C.AUX
DXFIS	R*8	NGROUP	MIXMT2 (PUTPNT) HOMOG (PUTPNT)	MIXMIN RDMIN FRMMTS FRMMAT	Array XFIS - fission cross section for a given material
DXFISN	R*8	NGROUP	MIXMT2 (PUTPNT) HOMOG (PUTPNT)	MIXMIN RDMIN FRMMTS FRMMAT	Array XFISNU, the nu times fission cross section for a given material
DXFN	R*8	NGROUP	MIXMT2 (PUTPNT) HOMOG (PUTPNT)	RDMIN FRMMAT	Quantity XF, the fission cross section for a group

Array Name	Type	Dimension	Subprograms issuing significant POINTR calls	Subprograms where values are set or modified	Definition
DXINEL	R*8 R*8	L1*NGROUP MAXSCT*NGROUP *MAXLNO where L1+(MAXSIZ-LSTLOC)/(4*NGROUP+3)	HOMOG(PUTPNT) MIXMT2(PUTPNT) MIXAUX(WIPOUT)	RDSCT MIXAUX RDSCT1 FRMMTS RDSCT	Inelastic scattering array XINEL of record type 4 in XS.C.AUX, the inelastic scattering cross section into group J from the group indexed by K for a given scattering order
DXN2N	R*8 R*8	L1*NGROUP MAXSCT* NGROUP* MAXLNO where L1=(MAXSIZ-LSTLOC)/(4*NGROUP+3)	HOMOG(PUTPNT) MIXMT2(PUTPNT) MIXAUX(WIPOUT)	RDSCT MIXAUX RDSCT1 FRMMTS RDSCT	Scattering block array XN2N of record type 6 in XS.C.AUX, the (n,2n) scattering cross section
DXSCT	R*8	MAXSCT* NGROUP	MIXMT2(PUTPNT)	FRMMAT	Array XSCT, the total scattering cross section for a given material
DXREM	R*8	NGROUP	HOMOG(PUTPNT)	MIXMIN RDMIN FRMMAT	XREM, the removal cross section for a group
DXTIR	R*8	(MAXSIZ- LSTLOC) /(4*NGROUP +3)	HOMOG(PUTPNT) MIXAUX(WIPOUT)	MIXAUX RDREM	Scattering block array XTIR of record type 7 in XS.C.AUX total inelastic removal cross section

Array Name	Type	Dimension	Subprograms issuing significant POINTR calls	Subprograms where values are set or modified	Definition
DXTER	R*8	(MAXSIZ-LSTLOC)/(4*NGROUP+3)	HOMOG(PUTPNT) MIXAUX(WIPOUT)	MIXAUX RDREM	Scattering block array XTER in record type 8 in XS.C.AUX - total elastic removal cross section
DXTN2N	R*8	(MAXSIZ-LSTLOC)/(4*NGROUP+3)	HOMOG(PUTPNT) MIXAUX(WIPOUT)	MIXAUX RDREM	Scattering block array XTN 2 NR of record type 9 in XS.C.AUX the total (n2n) removal cross section
DXTOT	R*8	NGROUP	HOMOG(PUTPNT)	MIXMIN RDMIN FRMMAT	Quantity XTOT, the total cross section for a group
DZDMCH	R*8	NGROUP*NFAM	MIXMT2(PUTPNT)	RDMIN FRMMAT	Array ZDMCHI, the delayed fission spectrum for a given material
DZDNFR	R*8	NFAM	MIXMT2(PUTPNT)	RDISO	Array ZDNFRC, the fraction of the delayed neutron yield that goes into a given family
DZDNYL	R*8	NGROUP	MIXMT2(PUTPNT)	RDISO	Array ZDNYLD the delayed neutron yield for a given isotope
DZICHI	R*8	NGROUP*NGROUP NGROUP	MIXMT1(PUTPNT) MIXMT2(REDEF) MIXMT2(WIPOUT)	RDCHI	Array ZICHI, the fission spectrum for a given isotope

Array Name	Type	Dimension	Subprograms issuing significant POINTR calls	Subprograms where values are set or modified	Definition
DZIXS	R*8	7	MIXMT1(PUTPNT)	RWIXS FRMMAT	Array ZIXS, containing the non-scattering cross section for a given isotope for a given group
DZMCHI	R*8	NGROUP* NGROUP	HOMOG(PUTPNT) MIXMT2(PUTPNT)	FRMCHI FRMMAT RDMIN	Array ZMCHI, the delayed fission spectrum for a given material
DZDNCH	R*8	NGROUP*NFAM	HOMOG(PUTPNT)	MIXMIN RDMIN	Array ZDNCHI, the delayed neutron fission fraction spectrum

7. HOMOG (NUC001) Data Set Usage

This section contains descriptions of all data sets used by this module. For each data set used, the following information is given.

1. The name of the data set, if it is an ARC System data set, or a description of its contents and function if it is a scratch data set used only within the module.

2. The record structure of the data set, if it is a scratch data set.

3. The names of the subprograms in which the data set is read and/or written, along with a list of the record types which are read or written within each subprogram and the name of the variable which contains the reference number of the data set.

Complete descriptions of the record structure and contents of each ARC System data set can be found in ANL-7711 of this series.

Name or description of data set - B.HOMOG, Binary Input for Cross-section Homogenization

Record structure - ARC System data set

Read in subprograms	Record types	Reference variable
BHOMOG	Material Mixture Control Data (type 1) Material Mixture Data (type 2) Composition Mixture Control Data (type 3) Composition Mixture Data (type 4)	NUM2
HOMOG	Composition Mixture Control Data (type 3)	NUM2
MIXMT1	Material Mixture Control Data (type 1)	NUM2
RDSPEC	Composition Mixture Data (type 4)	NUM2
RWISOS	Material Mixture Data (type 2)	NUM2

Written in subprograms - None

Name or description of data set - SCR001, A temporary data set which accumulates and holds for later use, the scattering data for each isotope as it is defined.

Record structure - NISO blocks of data each containing 1 record of types 1 and 2. Record type 1 contains an isotope name, DINME. Record type 2 contains scattering data for that isotope each consisting of:

ICHI - fission spectrum flag for that isotope
LIN - inelastic scattering order of isotope
LEL - elastic scattering order of isotope
LN2N - N2N scattering order of isotope
IUP - maximum number of groups of upscattering for isotope
IDN - maximum number of groups of downscattering for isotope

Read in subprograms	Record types	Reference variable
RWISOS	NISO of Name (type 1) NISO of Scattering Data (type 2)	NUM9

Written in subprograms	Record types	Reference variable
RWISO	NISO of Name (type 1) NISO of Scattering Data (type 2)	NUM9

Name or description of data set - SCR002, a temporary data set used to store material scattering data as it is accumulated for later use.

Record structure - NMAT scattering records each consisting of
MLNO - maximum scattering order for material
MAXUP --maximum upscattering order for material
MAXDN - maximum downscattering order for material
MCHI - fission spectrum flag for material
LINM - inelastic-scattering order for material
LELM - elastic-scattering order for material
LN2NM - N2N scattering order for material
where NAMT is the number of materials

Read in subprograms	Record types	Reference variable
FRMMTS	NMAT of Material Scattering Data	NUM10

Written in subprograms	Record types	Reference variable
RWISOS	NMAT of Material Scattering Data	NUM10

Name of description of data set - XS.C.ANI, the anisotropic macroscopic composition cross section data set

Record structure - ARC System data set

Read in subprograms	Record types	Reference variable
XSCANI	1 of Specification (type 1) NCMP of Composition Description (type 2) NCMP*LNO of Anisotropic Scattering (type 3) if LNO > 0, where LNO is the Scattering Order for Given Composition	NUM NUM NUM

Written in subprograms	Record types	Reference variable
HOMOG	1 of Specification (type 1)	NUM11
MIXANI	1 of Specification (type 1)	NUM11
MIXANI	NCMP of Composition Description (file 2, type 2)	NUM11
WRTANI	NCMP*LNO of Anisotropic Scattering (file 2, type 3) when LNO > 0 where LNO is the Scattering Order for Given Composition	NUM

Name or description of data set - XS.C.AUX, auxiliary macroscopic Composition Cross Section Data Set

Record structure - Standard ARC System data set

Read in subprograms	Record types	Reference variable
XSCAUX	1 of Specification (type 1, file 1)	NUM
XSCAUX	NCMP of Composition Description (type 2, file 2)	NUM
	NCMP*LNO of Scattering Description (type 3, file 2) when LNO > 0	
RWSCT	NCMP* $\sum_{L=1}^{LNO}$ (LIN $\geq$ L) of Inelastic Scattering type 4, file 2) when LNO > 0	NUM
	NCMP* $\sum_{L=1}^{LNO}$ (LEL $\geq$ L) of Elastic Scattering (type 5, file 2) when LNO > 0	NUM
	NCMP* $\sum_{L=1}^{LNO}$ (LN2N $\geq$ L) of N2 Scattering (type 6, file 2) when LNO > 0	

Written in subprograms	Record types	Reference variable
HOMOG	1 of Specification (type 1, file 1)	NUM12
MIXAUX	1 of Specification (type 1, file 1)	NUM12
	NCMP of Composition Description (type 2, file 2)	

Written in subprograms	Record types	Reference variable
WRTAUX	NCMP*LNO of Scattering Description (type 3, file 2) when LNO > 0	NUM12
WRTSCT	NCMP* $\sum_{L=1}^{LNO}$ (LIN $\geq$ L) of Inelastic Scattering (type 4, file 2) when LNO > 0	NUM12
WRTSCT	NCMP* $\sum_{L=1}^{LNO}$ (LEL $\geq$ L) of Elastic Scattering (type 5, file 2) when LNO > 0	NUM12
	NCMP* $\sum_{L=1}^{LNO}$ (LN2N $\geq$ L) of N2N Scattering (type 6, file 2) when LNO > 0	
WRTREM	NCMP* $\sum_{L=1}^{LNO}$ (LIN $\geq$ L) of Total Inelstic (type 7, file 2) when LNO > 0	NUM12
	NCMP* $\sum_{L=1}^{LNO}$ (LEL $\geq$ L) of Total Elastic (type 8, file 2) when LNO > 0	
	NCMP* $\sum_{L=1}^{LNO}$ (LN2N $\geq$ L) of Total N2N (type 9, file 2) when LNO > 0	

Name or description of data set - XS.C.MIN, Macroscopic Composition Cross Section Data Set

Record structure - Standard ARC data set

Read in subprograms	Record types	Reference variable
XSCMIN	Specification (type 1)	NUM

Written in subprograms	Record types	Reference variable
HOMOG	1 of Specification (type 1)	NUM13
MIXMIN	1 of Specification (type 1)	NUM13
RDMIN	1 of Set CHI (type 2, file 2) NCMP of composition specification (type 3, file 2) when ISCHI > 0 NCMP*NGROUP of Composition Macroscopic Group Cross Sections (type 4, file 2)	NUM13

Name or description of data set - XS.ISO, Microscopic Group Cross Section Data Set, File 1

Record structure - Standard ARC data set

Read in subprograms	Record types	Reference variable
MIXMT1	1 of File Size (type 1)	NUM4
RWSBLK	1 of Isotope Names (type 2) 1 of Group Structure (type 3)	NUM4
RDCHI	1 of Set Fission Spectrum (type 4) when ICHI≠0	NUM4
SKPREC	Types 1 and 2	NUM
RWISO	1 of Group Structure (type 3) 1 of Set Fission Spectrum (type 4) when ICHI≠0	NUM5
XSISO	1 of File Size (type 1) 1 of Isotope Name (type 2) 1 of Group Structure (type 3) 1 of Set Fission Spectrum (type 4) when ICHI≠0	NUM5

Written in subprograms	Record types	Reference variable
MIXMT1	1 of File Size (type 1) 1 of Isotope Name (type 2)	NUM5
RWSBLK	1 of Group Structure (type 3)	NUM5
WRTCHI	1 of Set Fission Spectrum (type 4) when ICHI≠0	NUM

Name or description of data set - XS.ISO2, Microscopic Group Cross Section Data Set, File 2

Record structure - Standard ARC data set

Read in subprograms	Record types	Reference variable
SKPREC	Types 2-8	NUM
RWISO	NISO of Isotope Name (type 1) NISO of Isotope Heading (type 2)	NUM4

Read in subprograms	Record types	Reference variable
RDCHI	NISO of Isotope Fission Spectrum (type 3) when ICHI > 0	NUM
RWIXS	NISO*NGROUP of Principle Cross Sections (type 4) NISO*NGROUP of Index for Scattering Group (type 5)	NUM4
RWUPDN	LMAX*NISO*NGROUP of Inelastic Scattering (type 6) if LIN > 0 LMAX*NISO*NGROUP of Elastic Scattering (type 7) if LEL > 0 LMAX*NISO*NGROUP of N2N Scattering (type 8) if LN2N > 0 where LMAX > 0	NUM4
XSISO	NISO of Isotope Name (type 1) NISO of Isotope HEading (type 2) NISO of Isotope Fission Spectrum (type 3) when ICHI > 0 NISO*NGROUP of Principle Cross Sections (type 4) LMAX*NISO*NGROUP of Index for Scattering Group (type 5)	NUM5
RWSCT	LMAX*NISO*GROUP of Inelastic Scattering (type 6) when LIN > 0) LMAX*NISO*NGROUP of Elastic Scattering (type 7) when LEL > 0 LMAX*NISO*NGROUP of Elastic Scattering (type 8) when LN2N > 0	NUM
RDISO	NISO of Isotope Name (type 1) NISO of Isotope Heading (type 2)	NUM5
RDCHI	NISO of Isotope Fission Spectrum (type 3) when ICHI > 0	NUM
FRMMAT	NISO*NGROUP of Principle Cross Sections (type 4)	NUM5
FRMSCT	LMAX*NISO*NGROUP of Index for Scattering Group (type 5)	NUM5
RDSCT	LMAX*NISO*NGROUP of Inelastic Scattering (type 6) when LIN > 0 LMAX*NISO*NGROUP of Elastic Scattering (type 7) when LEL > 0 LMAX*NISO*NGROUP of N2N Scattering (type 8) when LN2N > 0	NUM5

Written in subprograms	Record types	Reference variable
RWISO	NISO of Isotope Name (type 1) NISO of Isotope Heading (type 2)	NUM5
WRTCHI	NISO of Isotope Fission Spectrum (type 3) when ICHI > 0	NUM
RWIXS	NISO*NGROUP of Principle Cross Sections (type 4) NISO*NGROUP of Index for Scattering Group (type 5)	NUM5
RWUPDN	LMAX*NISO*NGROUP of Inelastic Scattering (type 6) when LIN > 0 LMAX*NISO*NGROUP of Elastic Scattering (type 7) when LEL > 0 LMAX*NISO*NGROUP of N2N Scattering (type 8) when LN2N > 0	NUM5

Name or description of data set - XS.M.ANI, Anisotropic Macroscopic Material Cross Sections

Record structure - Standard ARC data set

Read in subprograms	Record types	Reference variable
HOMOG	1 of Specification (type 1)	NUM6
XSMANI	1 of Specification (type 1) NMAT of Material Description (type 2) NMAT*(LNO-1) of Anisotropic Scattering (type 3) when LNO > 1	NUM6
SKPREC	Types 2 and 3	NUM
MIXANI	1 of Specification (type 1) NMAT of Material Description (type 2)	NUM6
RDANI	NMAT*(LNO-1) of Anisotropic Scattering (type 3) when LNO > 1	NUM6

Written in subprograms	Record types	Reference variables
MIXMT2	1 of Specification (type 1)	NUM6
FRMMTS	NMAT of Material Description (type 2)	NUM6
FRMMAT	(LNO-1)*NMAT of Material Scattering (type 3) when LNO > 1	NUM6

Name or description of data set - XS.M.AUX, Auxiliary Macroscopic Material Cross Sections

Record structure - Standard ARC data set

Read in subprograms	Record types	Reference variable
HOMOG	1 of Specification (type 1)	NUM7
XSMAUX	1 of Specification (type 1) NMAT of Material Description (type 2) NMAT*LNO of Scattering Description (type 3) when LNO > 0	NUM
RWSCT	NMAT* $\sum_{L=1}^{LNO}$ (LIN $\geq$ L) of Inelastic Scattering (type 4) when LNO > 0 NMAT* $\sum_{L=1}^{LNO}$ (LEL $\geq$ L) of Elastic Scattering (type 5) when LNO > 0 NMAT* $\sum_{L=1}^{LNO}$ (LN2N $\geq$ L) of N2N Scattering (type 6) when LNO > 0	NUM

Read in subprograms	Record types	Reference variable
RWSCT	NMAT* $\sum_{L=1}^{LNO}$ (LIN $\geq$ L) of Total Inelastic (type 7) when LNO > 0	NUM
	NMAT* $\sum_{L=1}^{LNO}$ (LEL $\geq$ L) of Total Elastic (type 8) when LNO > 0	
	NMAT* $\sum_{L=1}^{LNO}$ (LN2N $\geq$ L) of Total N2N (type 9) when LNO > 0	
MIXAUX	1 of Specification (type 1) NMAT of Material Descriptions (type 2)	NUM7
RWAUX	NMAT*LNO of Scattering Description (type 3) when LNO > 0	NUM7
RDSCT1	NMAT* $\sum_{L=1}^{LNO}$ (LIN $\geq$ L) of Inelastic Scattering (type 4) when LNO > 0	NUM7
	NMAT* $\sum_{L=1}^{LNO}$ (LEL $\geq$ L) of Elastic Scattering (type 5) when LNO > 0	
	NMAT* $\sum_{L=1}^{LNO}$ (LN2N $\geq$ L) of N2N Scattering (type 6) when LNO > 0	
RDREM	NMAT* $\sum_{L=1}^{LNO}$ (LIN $\geq$ L) of Total Inelastic (type 7) when LNO > 0	NUM7
	NMAT* $\sum_{L=1}^{LNO}$ (LEL $\geq$ L) of Total Elastic (type 8) when LNO > 0	
	NMAT* $\sum_{L=1}^{LNO}$ (LN2N - L) of Total N2N (type 9) when LNO > 0	

Written in subprograms	Record types	Reference variable
MIXMT2	1 of Specification (type 1)	NUM7
FRMMAT	NMAT of Material Description (type 2) NMAT*LNO of Scattering Description (type 3) when LNO > 0 $NMAT^* \sum_{L=1}^{LNO} (LIN \geq L)$ of Inelastic Scattering (type 4) when LNO > 0 $NMAT^* \sum_{L=1}^{LNO} (LEL \geq L)$ of Elastic Scattering (type 5) when LNO > 0 $NMAT^* \sum_{L=1}^{LNO} (LN2N \geq L)$ of N2N Scattering (type 6) when LNO > 0 $NMAT^* \sum_{L=1}^{LNO} (LIN \geq L)$ of Total Inelastic (type 7) when LNO > 0 $NMAT^* \sum_{L=1}^{LNO} (LIN \geq L)$ of Total Elastic (type 8) when LNO > 0 $NMAT^* \sum_{L=1}^{LNO} (LN2N \geq L)$ of Total N2N (type 9) when LNO > 0	NUM7

Name or description of data set - XS.M.MIN, Macroscopic Material Cross Section Data Set

Record structure - Standard ARC data set

Read in subprograms	Record types	Reference variable
HOMOG	1 of Specification (type 1)	NUM8
XSMMIN	1 of Specification (type 1) 1 of Set CHI (type 2) NMAT of Material Specifications (type 3)	NUM

Read in subprograms	Record types	Reference variable
XSMMIN	NMAT*NGROUP of Material Macroscopic Cross Sections (type 4)	NUM
RDCHI	1 of Set CHI (type 2)	NUM
MIXMIN	1 of Specification (type 1) 1 of Set CHI (type 2) NMAT of Material Specifications (type 3)	NUM8
RDMIN	NMAT*NGROUP of Material Macroscopic Cross Sections (type 4)	NUM8
SKPREC	Types 3 and 4	NUM8

Written in subprograms	Record types	Reference variable
MIXMT2	1 of Specification (type 1)	NUM8
WCHI	1 of Set CHI (type 2)	NUM
FRMMAT	NMAT of Material Specifications (type 3)	NUM8
WRTMIN	NMAT*NGROUP Macroscopic Group of Cross Sections (type 4)	NUM8

8. HOMOG (NUC001) Error Messages

Error messages in the HOMOG module are printed by a single subprogram, ERROUT, which is called from various other subprograms in the module with an error number as the argument. This error number appears in the printed output in place of the 'nnnnn' in the message 'ERROR NUMBER=nnnnn'. The subprogram then calls ABEND which terminates execution.

The error numbers and their meanings are listed in this section by the calling subroutine name in the same order as in section 4.

HOMOG

Error Number	Reason
1	Data set B.HOMOG is missing.
4	The container array has overflowed.
5	The container array has overflowed.
6	The container array has overflowed.
7	The Materials→Compositions option was specified but no material data sets were supplied.
20001	Unexpected end of file on data set B.HOMOG.
20002	Unexpected end of file on data set XS.M.ANI.
20003	Unexpected end of file on data set XS.M.AUX.
20004	Unexpected end of file on data set XS.M.MIN.
30001	Parity errors on data set B.HOMOG.
30002	Parity errors on data set XS.M.ANI.
30003	Parity errors on data set XS.M.AUX.
30004	Parity errors on data sets XS.M.MIN.

FRMMAT

Error Number	Reason
1001	Group number just read from XS.ISO2 does not match the current group number.
21001	Unexpected end of file on data set XS.ISO2.
31001	Parity error on data set XS.ISO2.

FRMMTS

Error Number	Reason
20801	Unexpected end of file on data set XS.DELAY.
20802	Unexpected end of file on data set SCR002.
20804	Unexpected end of file on data set XS.ISO2.

Error Number	Reason
20851	Expected end of file not encountered on data set XS.ISO2.
20852	Expected end of file not encountered on data set XS.ISO2.
20853	Expected end of file not encountered on data set XS.DELAY.
30801	Parity error on data set XS.DELAY.
30802	Parity error on data set SCR002.
30804	Parity error on data set XS.ISO2.
30851	Parity error on data set XS.ISO2.
30852	Parity error on data set XS.ISO2.

FRMSCT

Error Number	Reason
21101	Unexpected end of file on data set XS.ISO2.
31101	Parity error on data set XS.ISO2.

MIXANI

Error Number	Reason
2101	Requested material name does not exist on data set XS.M.ANI.
22101	Unexpected end of file on data set XS.M.ANI.
22102	Unexpected end of file on data set XS.M.ANI.
22103	Unexpected end of file on data set XS.M.ANI.
22104	Unexpected end of file on data set XS.M.ANI.
32101	Parity error on data set XS.M.ANI.
32102	Parity error on data set XS.M.ANI.
32103	Parity error on data set XS.M.ANI.
32104	Parity error on data set XS.M.ANI.

MIXAUX

Error Number	Reason
2301	Requested material name does not exist on data set XS.M.AUX.
22301	Unexpected end of file on data set XS.M.AUX.
22302	Unexpected end of file on data set XS.M.AUX.
22303	Unexpected end of file on data set XS.M.AUX.
22351	Unexpected end of file on data set XS.M.AUX.
32301	Parity error on data set XS.M.AUX.
32302	Parity error on data set XS.M.AUX.
32303	Parity error on data set XS.M.AUX.
32351	Parity error on data set XS.M.AUX.

MIXMIN

Error Number	Reason
2601	Requested material name does not exist on data set XS.M.MIN.
22601	Unexpected end of file on data set XS.M.MIN.
22602	Unexpected end of file on data set XS.M.MIN.
22603	Unexpected end of file on data set XS.M.MIN.
22604	Unexpected end of file on data set XS.M.MIN.
32601	Parity error on data set XS.M.MIN.
32602	Parity error on data set XS.M.MIN.
32603	Parity error on data set XS.M.MIN.
32604	Parity error on data set XS.M.MIN.

MIXMT1

Error Number	Reason
101	No isotope data set was supplied.
102	Data set B.HOMOG is missing.
103	The container array has overflowed.
104	The container array has overflowed.
20101	Unexpected end of file on data set B.HOMOG.
20102	Unexpected end of file on data set XS.ISO.
20151	Expected end of file was not encountered on data set XS.ISO.
30101	Parity error on B.HOMOG.
30102	Parity error on XS.ISO.
30151	Parity error on XS.ISO.

MIXMT2

Error Number	Reason
2001	The number of groups on XS.DELAY does not agree with the number of groups on XS.ISO.
2002	The container array has overflowed.
2003	The container array has overflowed.
2051	In the CALL HOMOG(N1,N2,N3,N4,N5) statement, N3, N4 and N5 were all zero.
22001	Unexpected end of file on data set XS.DELAY.
22002	Unexpected end of file on data set XS.ISO2.
32001	Parity error on data set XS.DELAY.
32002	Parity error on data set XS.ISO2.

RDANI

Error Number	Reason
22201	Unexpected end of file on data set XS.M.ANI.
32201	Parity error on data set XS.M.ANI.

RDCHI

Error Number	Reason
20701	Unexpected end of file on data set.
30701	Parity error on data set.

RDISO

Error Number	Reason
901	Isotope name just read from XS.ISO2 does not match the requested name.
902	Requested isotope name does not exist on data set XS.DELAY.
903	Isotope name just read from XS.DELAY does not match the requested name.
904	A fissionable isotope on XS.ISO2 uses the set fission spectrum but the set fission spectrum does not exist.
20901	Unexpected end of file on data set XS.ISO2.
20902	Unexpected end of file on data set XS.ISO2.
20903	Unexpected end of file on data set XS.DELAY.
20904	Unexpected end of file on data set XS.DELAY.
20905	Unexpected end of file on data set XS.DELAY
20906	Unexpected end of file on data set XS.DELAY.
20907	Unexpected end of file on data set XS.DELAY.
20908	Unexpected end of file on data set XS.ISO2.

Error Number	Reason
30901	Parity error on data set XS.ISO2.
30902	Parity error on data set XS.ISO2.
30903	Parity error on data set XS.DELAY.
30904	Parity error on data set XS.DELAY.
30905	Parity error on data set XS.DELAY.
30906	Parity error on data set XS.DELAY.
30907	Parity error on data set XS.DELAY.
30908	Parity error on data set XS.ISO2.

RDMIN

Error Number	Reason
22701	Unexpected end of file on data set XS.M.MIN.
32701	Parity error on data set XS.M.MIN.

RDSCT

Error Number	Reason
21201	Unexpected end of file on data set XS.ISO2.
31201	Parity error on data set XS.ISO2.

RDSCT1

Error Number	Reason
22501	Unexpected end of file on data set XS.M.AUX.
22502	Unexpected end of file on data set XS.M.AUX.
32501	Parity error on data set XS.M.AUX.
32502	Parity error on data set XS.M.AUX.

RDSPEC

Error Number	Reason
22801	Unexpected end of file on data set B.HOMOG.
32801	Parity error on data set B.HOMOG.

RWAUX

Error Number	Reason
22401	Unexpected end of file on data set XS.M.AUX.
32401	Parity error on data set XS.M.AUX.

RWISO

Error Number	Reason
301	Isotope name read from data set XS.ISO does not match the requested name.
302	A fissionable isotope on XS.ISO uses the set fission spectrum but the set fission spectrum does not exist.
20301	Unexpected end of file on data set XS.ISO.
20302	Unexpected end of file on data set XS.ISO.
30301	Parity error on data set XS.ISO.
30302	Parity error on data set XS.ISO.

RWISOS

Error Number	Reason
201	Not all of the requested isotopes were found on data set XS.ISO.
202	Isotope name in mix table does not appear in name table.
203	Isotope name read from data set SCR001 does not match the requested name.

Error Number	Reason
251	Not all of the requested isotopes were found on data set XS.ISO.
20201	Unexpected end of file on data set XS.ISO.
20202	Unexpected end of file on data set XS.ISO2.
20203	Unexpected end of file on data set XS.ISO2.
20204	Unexpected end of file on data set B.HOMOG.
20205	Unexpected end of file on data set SCR001.
20206	Unexpected end of file on data set SCR001.
20207	Unexpected end of file on data set SCR001.
20208	Unexpected end of file on data set XS.ISO2.
30201	Parity error on data set XS.ISO.
30202	Parity error on data set XS.ISO2.
30203	Parity error on data set XS.ISO2.
30204	Parity error on data set B.HOMOG.
30205	Parity error on data set SCR001.
30206	Parity error on data set SCR001.
30207	Parity error on data set SCR001.
30208	Parity error on data set XS.ISO2.

RWIXS

Error Number	Reason
401	Group number just read from XS.ISO does not correspond to the current group number.
402	The container array has overflowed. Also unexpected end of file on XS.ISO record type 3 file 2.
20401	Unexpected end of file on data set XS.ISO.
20402	Unexpected end of file on data set XS.ISO.
30401	Parity error on data set XS.ISO.
30402	Parity error on data set XS.ISO.

RWSBLK

Error Number	Reason
20601	Unexpected end of file on data set XS.ISO, record type 2, file 1.
20602	Unexpected end of file on data set XS.ISO, record type 3, file 1.
30601	Parity error on data set XS.ISO, file 1, record type 2.
30601	Parity error on data set XS.ISO, file 1, record type 3.

RWUPDN

Error Number	Reason
20501	Unexpected end of file on data set XS.ISO.
30501	Parity error on data set XS.ISO.

9. HOMOG (NUC001) Timing Information

Timing Information for NUI001 and NUC001

Run	Edit Data Sets	Data Sets Written XS.C.MIN	XS.C.ANI	XS.C.AUX	Approximate Time[a] (minutes)
Case 1:	Yes	X			0.2
6 groups	No	X			0.1
12 isotopes (type 14	No	X	X[b]		0.1
cards only)	No			X	0.1
2 compositions	No	X	X[b]	X	0.1
Case 2:	Yes	X			0.3
6 groups	No	X			0.2
12 isotopes	No	X	X[b]		0.2
8 materials	No	X		X	0.2
5 compositions	No	X	X[b]	X	0.2
Case 3:	Yes	X			0.7
26 groups	No	X			0.4
9 isotopes	No	X	X		0.5
8 materials	No	X		X	0.5
5 compositions	No	X	X	X	0.5

[a]Times include both NUI001 and NUC001, and NUI001 times are consistently the order of 0.01 minutes.
[b]No anisotropic data and only an abbreviated data set written.

10. HOMOG (NUC001) Sample Output

The example which follows is representative of the HOMOG module printed output. Other output is described in Section 2.

Shown here is the output obtained from a homogenization of isotopes to materials to compositions. The microscopic group cross section data sets XS.ISO1 and XS.ISO2 were written along with the material and composition anisotropic macroscopic cross-section data sets XS.M.ANI and XS.C.ANI, as well as the macroscopic material and composition cross section data sets XS.M.MIN and XS.C.MIN.

The first few pages contain printed time messages, one per page. The first time shown is that spent in execution of segment MIXT1 (substep 1 of the isotopes to materials option). The second time is that spent in segment MIXMT2, (substep 2 of the isotopes to materials option). The third and fourth times indicate time spent in the substeps of the materials to compositions option; in this case, segments MIXANI and MIXMIN. A time appears for each substep which has been executed.

Following these, the data set edits appear, each one on a new page.

First shown is the XS.ISO-XS.ISO2 data set. After the title, a file size record is given showing number of groups and number of isotopes. Isotope names are given under the title 'ISONME' and the number of records to be skipped in XS.ISO2 to access the isotope records is given under title 'LOCA'.

The set fission flag follows.

Group structure is printed under titles 'ENERGY', 'LETHARGY', 'VELOCITY' and the set fission spectrum is shown under the title 'SETCHI'.

From the second file of XS.ISO2, the individual isotope edits appear under the heading 'EDIT OF ISOTOPE 'AAAAAA' ' which starts a new page in each case. The quantities in the isotope heading record are given; namely, the fission flag, ICHI, the maximum order of inelastic scattering, LIN, the maximum order of elastic scattering, LEL, and the maximum order of N,2N scattering, LN2N.

The principal cross sections are listed for every group, with identifiers, i.e., transport, capture (N,gamma), capture (N, alpha), capture (n,p) anisotropic self-scattering, fission and nu times fission.

For the given isotope, edits of each scattering order appear listed for every group. These include a scattering index list which contains the number of inelastic upscattering and downscattering groups LN2NUP and LN2NDN.

Where any of these quantities is greater than zero, a corresponding scattering record is given. In the example, inelastic scattering is present and values are listed under the title 'INEL'. The titles that could appear are 'ELAS' and 'N2N'.

The B.HOMOG edit appears on a new page. Under the title 'MATERIAL', the material mixture control data is listed under the title 'MIXTBL', the isotope mix table appears (array DIMIX). Under the title 'ADORVF' the atomic densities (ATMDEN) are listed. Under the title 'SPEC', array MSPEC, the number of isotopes comprising each material, is listed. Lastly, under 'TABLE', the list of all isotopes used (array DITBL) appears.

Next shown is the edit of data set XS.M.ANI which starts a new page. The quantities in the file structure record are listed first: NMAT, NUMANI, NGROUP, MAXLNO, MAXUPG, and MAXDNG. Under the title 'DMTBL', the material names are listed.

Following this are edits of the NMAT material description records which show: LNO, the scattering order, MAXUP, the number of groups of upscattering, and LASCAT, the length of the scattering lists into each group.

Since the order of anisotropic scattering is 2, and the scattering order of the example is 1, there is no anisotropic scattering list shown here. This would appear, if present, under the title 'ANISCT'.

The edit of data set XS.M.MIN starts a new page. As in other edits, the specification record is shown first, and it contains NMAT, NGROUP, ISCHI, NFMAT, NFAM, MAXUPG, and MAXDNG.

Under the title DMTBL, the material labels are listed. Then under 'SETCHI', the CHI array is printed.

For each of the NMAT materials, there is a material edit given under the heading 'EDIT OF MATERIAL 'N' '.

The material specification record which shows the prompt fission spectrum flag ICHI is shown first. Under the titles 'NUP' and 'NDN', the number of groups of upscattering and downscattering appear for a given group cross section record. In each material edit there are NGROUP group- cross-section edits. For each group, under the title 'EDIT OF GROUP 'N' ', the macroscopic group cross sections are listed under these names: 'ABSXSEC', the absorption cross section, 'TOTXSEC', the total cross section, 'REMXSEC', the removal cross section, 'TRXSEC', the transport cross section, 'FISXSEC', the fission cross section, and 'NUFXSEC', the total neutrons emitted times fission cross section.

The edit of XS.C.ANI that follows is similar to that of XS.M.ANI and the edit of XS.C.MIN follows the same form as that of XS.M.MIN.

Edits of XS.M.AUX and XS.C.AUX would follow in the same general form with titles if they had been written.

Following the data set edits, a final time appears on a new page. This is the total time spent in execution of the module.

If output edits have not been specified in the call to HOMOG, the sole output is the printed times as described above.

```
TIME =    0.17 MINUTES.
SNIFF**********XS.DELAY HAS NOT BEEN WRITTEN YET AND YOU HAVE REQUESTED TO READ IT.


TIME =    0.10 MINUTES.


TIME =    0.05 MINUTES.


TIME =    0.06 MINUTES.


                                                EDIT OF XS.ISO(XS.ISO2) DATA SET

NO. OF GROUPS =  16

NO. OF ISOTOPES =    4

                                                ISONME

  U235       BE9        S          POW

                                                LOCA

           0          50         100         150

SET FISSION FLAG =    1

                                                ENERGY

 0.20000000D 01 0.16000000D 01 0.15000000D 01 0.14000000D 01 0.13000000D 01 0.12000000D 01 0.11000000D 01 0.10000000D 01
 0.90000000D 00 0.80000000D 00 0.70000000D 00 0.60000000D 00 0.50000000D 00 0.40000000D 00 0.30000000D 00 0.20000000D 00
 0.10000000D 00

                                                LETHARGY

 0.0            0.22314400D 00 0.28768200D 00 0.35667500D 00 0.43078300D 00 0.51082600D 00 0.59783700D 00 0.69314700D 00
 0.79850800D 00 0.91629100D 00 0.10498200D 01 0.12039700D 01 0.13862900D 01 0.16094400D 01 0.18971200D 01 0.23025900D 01
 0.29957300D 01

                                                VELOCITY

 0.28500000D 02 0.19900000D 02 0.14700000D 02 0.11000000D 02 0.67000000D 01 0.27000000D 01 0.11400000D 01 0.48000000D 00
 0.20600000D 00 0.10100000D 00 0.56600000D-01 0.31900000D-01 0.17900000D-01 0.10900000D-01 0.60600000D-02 0.21800000D-02

                                                SETCHI

 0.20400000D 00 0.34400000D 00 0.16800000D 00 0.18000000D 00 0.90000000D-01 0.14000000D-01 0.0            0.0
 0.0            0.0            0.0            0.0            0.0            0.0            0.0            0.0
```

```
                                                    EDIT OF ISOTOPE U235

FISSICN FLAG = -1
MAX. ORDER INEL. SCAT. = 0
MAX. ORDER ELAS. SCAT. =-1
MAX. CRDER N2N SCAT. =-1
                                                    EDIT OF GROUP   1

TRANSPCRT =   0.425000D 01
CAPTURE(N,GAMMA) =  -0.229700D 01
CAPTURE(N,ALPHA) =   0.0
CAPTURE(N,P) =   0.0
ANISOTROPIC SELF SCATTERING =   0.0
FISSION =   0.355700D 01
NU*FISSICN =   0.355700D 01
                                                    EDIT OF GROUP   2

TRANSPCRT =   0.450000D 01
CAPTURE(N,GAMMA) =  -0.189600D 01
CAPTURE(N,ALPHA) =   0.0
CAPTURE(N,P) =   0.0
ANISOTROPIC SELF SCATTERING =   0.0
FISSICN =   0.319600D 01
NU*FISSION =   C.319600D 01
            .                                       .
            .                                       .
            .                                       .
            .                                       .
                                                    EDIT OF GROUP  16

TRANSPCRT =   0.621000D 03
CAPTURE(N,GAMMA) =  -0.653200D 03
CAPTURE(N,ALPHA) =   0.0
CAPTURE(N,P) =   0.0
ANISOTROPIC SELF SCATTERING =   0.0
FISSICN =   0.126420D 04
NU*FISSION =   0.126420D 04
                                                EDIT OF SCATTERING FOR ORDER  0
                                                    EDIT OF GROUP   1

LINUP =   0 LINDN =   0 LELUP =   0 LELDN =   0 LN2NUP =   0 LN2NDN =   0
                                                INEL
 0.12000000D 01
            .                                       .
            .                                       .
            .                                       .
```

```
                                                    EDIT OF GROUP   6

LINUP =   0 LINDN =   5 LELUP =   0 LELDN =   0 LN2NUP =   0 LN2NDN =   0
                                                    INEL
 0.92000000D 01 0.80000000D-01 0.80000000D-01 0.69999993D-01 0.69999993D-01 0.59999999D-01
            .                                                   .
            .                                                   .

                                                    EDIT OF GROUP  16

LINUP =   0 LINDN =   1 LELUP =   0 LELDN =   0 LN2NUP =   0 LN2NDN =   0
                                                    INEL
 0.10000000D 02 0.39999999D-01


                                                    EDIT OF ISOTOPE BE9

                                                        .   .   .
                                                        .   .   .

                                                    EDIT OF ISOTOPE S

                                                        .   .   .
                                                        .   .   .

                                                    EDIT OF ISOTOPE POW

                                                        .   .   .
                                                        .   .   .
```

```
                                                    EDIT OF B.HOMOG DATA SET
                                                    MATERIAL
LENGTH OF MIX TABLE =    4
NO. OF MAT.(COMP.) =    2
NO. OF ISO.(MAT.) =    4
                                                    MIXTBL
  U235       S          POW        BE9
                                                    ADORVF
 0.39900000D-02 0.39900000D-02 0.24400000D-01 0.99000000D-01
                                                    SPEC
          3           1
                                                    TABLE
  U235       S          POW        BE9
```

```
                                                    EDIT OF B.HOMOG DATA SET
                                                    COMPOS.
LENGTH OF MIX TABLE =    2
NO. OF MAT.(COMP.) =    2
NO. OF ISO.(MAT.) =    2
                                                    MIXTBL
  M1         M2
                                                    ADORVF
 C.10000000D 01 0.10000000D 01
                                                    SPEC
          1           1
                                                    TABLE
  M1         M2
```

EDIT OF XS.M.ANI DATA SET

```
NMAT =    2
NUMANI =    0
NGROUP =   16
MAXLNO =   1
MAXUPG =    0
MAXDNG =    5
```

DMTBL

```
  M1         M2
```

EDIT OF MATERIAL 1

```
LNO =  1
MAXUP =    0
LASCAT =    6
```

EDIT OF MATERIAL 2

```
LNO =  1
MAXUP =    0
LASCAT =    6
```

EDIT OF XS.M.MIN DATA SET

```
NMAT =    2
NGROUP =   16
ISCHI =   1
NFMAT =    1
NFAM =   0
MAXUPG =    0
MAXDNG =    5
```

DMTBL

```
  M1         M2
```

SETCHI

```
0.20400000D 00 0.34400000D 00 0.16800000D 00 0.18000000D 00 0.90000000D-01 0.14000000D-01 0.0            0.0
0.0            0.0            0.0            0.0            0.0            0.0            0.0            0.0
```

EDIT OF MATERIAL 1

```
ICHI = -1
```

NUP

```
0          0          0          0          0          0          0          0          0          0          0
0          0          0          0          0
```

NDN

```
0          1          2          3          4          5          1          1          1          1          1
1          1          1          1          1
```

```
                                        EDIT OF GROUP   1

ABSXSEC=   0.76301000D-02 TOTXSEC=   0.10745860D 00 REMXSEC=   0.68387137D-01 TRXSEC=    0.10745860D 00
FISXSEC=   0.14192430D-01 NUFXSEC=   0.14192430D-01

                                        SCAT

 0.39071460D-01

              .                                        .

              .                                        .

                                        EDIT OF GROUP   6

ABSXSEC=   0.18353450D-01 TOTXSEC=   0.28630800D 00 REMXSEC=   0.20003140D-01 TRXSEC=    0.28630800D 00
FISXSEC=   0.24438750D-01 NUFXSEC=   0.24438750D-01

                                        SCAT

 0.26630486D 00 0.27300498D-02 0.22712000D-02 0.27192991D-02 0.24752993D-02 0.19473998D-02

              .                                        .

              .                                        .

                                        EDIT OF GROUP  16

ABSXSEC=   0.27447653D 01 TOTXSEC=   0.29103760D 01 REMXSEC=   0.27447653D 01 TRXSEC=    0.29103760D 01
FISXSEC=   0.50441580D 01 NUFXSEC=   0.50441580D 01

                                        SCAT

 0.16561070D 00 0.12947399D-02

                                        EDIT OF MATERIAL   2

ICHI =  0

                                        NUP

          0          0          0          0          0          0          0          0          0          0          0
          0          0          0          0          0

                                        NDN

          0          1          2          2          1          1          1          1          1          1          1
          1          1          1          1          1
```

```
                                        EDIT OF GROUP   1

ABSXSEC=  -0.30591000D-01 TOTXSEC=   0.12780900D 00 REMXSEC=   0.85040992D-01 TRXSEC=    0.12780900D 00
                                        SCAT

 0.42768000D-01


                                        EDIT OF GROUP  16

ABSXSEC=   0.89100000D-03 TOTXSEC=   0.55133100D 00 REMXSEC=   0.89100000D-03 TRXSEC=    0.55133100D 00
                                        SCAT

 0.55044000D 00 0.87120000D-01


                                        EDIT OF XS.C.ANI DATA SET

NCMP =   2
NUMANI =   0
NGROUP =  16
MAXLNO =  1
MAXUPG =   0
MAXDNG =   5
                                        DCTBL

  C1        C2
                                        EDIT OF COMPOSITION   1

LNO =  1
MAXUP =   0
LASCAT =   6
                                        EDIT OF COMPOSITION   2

LNO =  1
MAXUP =   0
LASCAT =   6
```

```
                                        EDIT OF XS.C.MIN DATA SET

NCMP =   2
NGROUP =  16
ISCHI =  1
NFCMP=   1
NFAM =  0
MAXUPG =   0
MAXDNG =   5

                                        DCTBL

  C1        C2

                                        SETCHI

 0.20400000D 00 0.34400000D 00 0.16800000D 00 0.18000000D 00 0.90000000D-01 0.14000000D-01 0.0            0.0
 0.0            0.0            0.0            0.0            0.0            0.0            0.0            0.0

                                        EDIT OF COMPOSITION   1

ICHI = -1

                                        NUP

          0          0          0          0          0          0          0          0          0          0          0
          0          0          0          0          0

                                        NDN

          0          1          2          3          4          5          1          1          1          1          1
          1          1          1          1          1

                                        EDIT OF GROUP   1

ABSXSEC=   0.76301000D-02 TOTXSEC=   0.10745860D 00 REMXSEC=   0.68387137D-01 TRXSEC=    0.10745860D 00
FISXSEC=   0.14192430D-01 NUFXSEC=   0.14192430D-01

                                        SCAT

 0.39071460D-01

                                        EDIT OF GROUP   2

ABSXSEC=   0.66863000D-02 TOTXSEC=   0.11630090D 00 REMXSEC=   0.61354978D-01 TRXSEC=    0.11630090D 00
FISXSEC=   0.12752040D-01 NUFXSEC=   0.12752040D-01

                                        SCAT

 0.54945920D-01 0.95522393D-02

                .                                  .
                .                                  .
                .                                  .
                .                                  .
```

```
                                        EDIT OF GROUP  16

ABSXSEC=   0.27447653D 01 TOTXSEC=   0.29103760D 01 REMXSEC=   0.27447653D 01 TRXSEC=    0.29103760D 01
FISXSEC=   0.50441580D 01 NUFXSEC=   0.50441580D 01
                                        SCAT

 0.16561070D 00 0.12947399D-02
                                        EDIT OF COMPOSITION   2

ICHI =  0
                                        NUP
        0          0          0          0          0          0          0          0          0          0          0
        0          0          0          0          0
                                        NDN
        0          1          2          2          1          1          1          1          1          1          1
        1          1          1          1          1
                                        EDIT OF GROUP   1

ABSXSEC=  -0.30591000D-01 TOTXSEC=   0.12780900D 00 REMXSEC=   0.85040992D-01 TRXSEC=    0.12780900D 00
                                        SCAT

 0.42768000D-01
              .                                      .
              .                                      .
              .                                      .
              .                                      .
                                        EDIT OF GROUP  16

ABSXSEC=   0.89100000D-03 TOTXSEC=   0.55133100D 00 REMXSEC=   0.89100000D-03 TRXSEC=    0.55133100D 00
                                        SCAT

 0.55044000D 00 0.87120000D-01


TIME =   0.56 MINUTES.
```

PART THREE.
MATERIAL-TO-COMPOSITION CROSS-SECTION HOMOGENIZATION CALCULATION MODULE, HHOMOG (NUC007)

Designed By - J. Hoover
Programmed By - J. Hoover
Documented By - J. Hoover

1. HHOMOG (NUC007) Introduction

a. Description of Capabilities

This module reads and analyzes material-level cross sections (XS.M.MIN) and volume fractions (B.HOMOG) to generate composition-level cross sections (XS.C.MIN). Insufficient or inconsistent data are not noted with an error message; processing continues until a fatal error occurs.

b. Standard Paths Which Utilize This Module, and Other Modules Utilized by Each Path

Modules Utilized by Each Path	Standard Paths Which Utilize This Module: STP004 Burnup Diffusion Theory
INHOMG (NUI001) Multigroup Cross Section Homogenization Specifications	X
HOMOG (NUC001) Multigroup Cross Section Homogenization	X
HHOMOG (NUC007) Material-to-Composition Cross Section Homogenization	X
GNIP (NUI002) Neutronics Input Processor	X
DIF1D (NUC002) One-dimensional Diffusion Theory k_{eff} and Source Calculations	X
DIDSCH (NUC004) One-dimensional Diffusion Theory Criticality Search	X

DARC1D

b. Standard Paths Which Utilize This Module, and Other Modules Utilized by Each Path (Contd.)

	Modules Utilized by Each Path	Standard Paths Which Utilize This Module
		STP004 Burnup Diffusion Theory
DARC2D	DIF2D (NUC005) Two-dimensional Diffusion Theory k_{eff} and Source Calculations	X
DARC2D	D2DSCH (NUC004) Two-dimensional Diffusion Theory Criticality Search	X
REBUS	INFUEL (FCI001) Fuel Cycle Specifications	X
REBUS	FUELCY (FCC001) Fuel Cycle Analysis	X

c. Data Sets Utilized by This Module

Upper-interface Data Sets	Records Read
B.HOMOG, Binary Version of Homogenization Input	Composition Mixture Control Data (type 3) Composition Mixture Data (type 4)
XS.M.MIN, Macroscopic Material Cross Sections	All

Lower-interface Data Sets	Records Written
XS.C.MIN, Macroscopic Composition Cross Sections	All

2. HHOMOG (NUC007) Description of Problem and Method of Solution

a. Introduction

Composition-level cross sections must be defined and prepared in a form acceptable to the computational modules of the ARC System. The processing includes the reading and analysis of the specified volume fractions and material-level cross sections, material fission spectrum fractions, and material delayed neutron data.

b. Linear Flux Weighting Equations

i) Composition Cross Sections

Composition cross sections are formed by homogenizing material cross sections as follows:

$$\bar{\Sigma}_x(g,c) = \sum_{m\varepsilon c} VF(m\varepsilon c) \cdot \Sigma_x(g,m) \quad ,$$

where

$\bar{\Sigma}_x(g,c)$ is the macroscopic composition cross section of type x, group g, and composition c;

$\Sigma_x(g,m)$ is the macroscopic material cross section of type x, group g and material m;

$VF(m\varepsilon c)$ is the volume fraction of material m in composition c.

$x, \Sigma_x(g,m)$, $\Sigma_x(g,c)$ can be any of the following:

x = Type	Symbol (Σ_x)
1. Absorption	$\bar{\Sigma}_a(g,c)$
2. Total	$\bar{\Sigma}_t(g,c)$
3. Removal	$\bar{\Sigma}_r(g,c)$
4. Transport	$\bar{\Sigma}_{tr}(g,c)$
5. Fission	$\bar{\Sigma}_f(g,c)$

6. Nu times Fission $\nu\Sigma_f(g,c)$

7. Scattering $\bar{\Sigma}_s(g\to k,c)$

8. Prompt Nu times Fission $\overline{\nu_p\Sigma_f}(g,c)$

ii) Composition Fission-spectrum Fractions

(1) All fissionable materials present have the same parent group-independent vector.

(2) All fissionable materials present do not have the same parent group-independent vector.

For Case (1), no homogenization is done and the composition fission spectrum fraction is taken to be the same as the material fission spectrum fraction.

$$\bar{\chi}(g) = \chi(g)$$

For Case (2)

$$\chi(k\to g,c) = \frac{\sum_{m\varepsilon c} \chi(k\to g,m) \cdot VF(m\varepsilon c) \cdot \nu\Sigma_f(k,m)}{\overline{\nu\Sigma_f}(k,c)}$$

where

$\chi(k\to g,m)$ is the material fission-spectrum fraction from parent group k to daughter group g for material m.

iii) Composition Delayed-neutron Data

(1) Prompt Nu times Fission Composition

$$\overline{\nu_p\Sigma_f}(g,c) = \sum_{m\varepsilon c} VF(m\varepsilon c) \cdot \nu_p\Sigma_f(g,m)$$

(2) Composition Delayed Fission-spectrum Fractions

$$\bar{\tilde{\chi}}(g,F,c) = \frac{\sum_{m\varepsilon c} VF(m\varepsilon \quad \cdot \tilde{\chi}(g,F,m) \cdot \nu_p\Sigma_f(g,m)}{\overline{\nu_p\Sigma_f}(g,c)}$$

where

$\tilde{\chi}(g,F,m)$ is the delayed fission-spectrum fraction for material m, family F, and group g.

3. HHOMOG (NUC007) Description of Module Flow

This section describes the overlay structure of this module and the flow of logic through the subprograms.

Section a. consists of an overlay structure diagram, showing the ARC System segments and HHOMOG module segments required by this module and their positions in the overlay heirarchy. This is followed by a list of the subroutines located in each HHOMOG module segment.

Section b. illustrates the flow of logic through the subprograms of this module, and section c. describes this flow in terms of the module's functions.

a. Overlay Structure Diagram

```
HHOMOG
SYSTEM
POINTR
LINK
LOAD
IBCOM
```

No Overlays

Subprograms contained in each HHOMOG (NUC007) module segment

```
MAIN
HOMOG
M2
M3
M4
```

b. Diagrammatic Subprogram Logic Flow

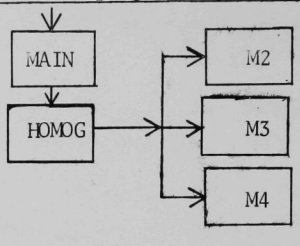

c. Descriptive Subprogram Logic Flow

The HHOMOG module is entered when a CALL LINK('NUC007 ', N1, N2) statement appears in a path or module. N1 is the data set reference number for XS.M.MIN and N2 is the data set reference number for B.HOMOG. The main program calls subroutine HOMOG, which initializes POINTR* tables and calls the functional subroutines M2, M3, and M4. In M2 record type 4 of the data set B.HOMOG is read. In M3 the material cross sections on XS.M.MIN are read. In subroutine M4 the macroscopic cross sections are generated and data set XS.C.MIN is written.

---

*ARC System subprogram package described in ANL-7711.

4. HHOMOG (NUC007) Subprogram Descriptions

This section contains descriptions of all subprograms which are part of the HHOMOG (NUC007) module. The descriptions appear in alphabetical order by subprogram name.

Each subprogram description begins with a listing of the calling sequence of the subroutine and of its entry points, if any. Subsection 1 is a list of the arguments of the subroutine and its entry points, in order of appearance, with the type of each argument, its dimensions in the subprogram if it is an array, and its definition or use. The two types of variables used are I*4, denoting an integer fullword (32 bits); and R*8, denoting a floating-point doubleword (64 bits). Variables used as array dimensions are defined either as arguments or as members of common blocks.

Subsection 2 contains the names of all common blocks used by the subprogram. Each is followed by a list of the variables actually used from the common block within the subprogram, together with their definitions.

Subsection 3 contains a listing of important variables which are local to the subprogram, in a format like that of subsection 1. Subsection 4 describes the functions performed by the subprogram in terms of the overall purpose of the module.

Subsection 5 lists all subprograms called by this subprogram or any of its entry points; subsection 6 lists the subprograms which call this subprogram or any of its entry points.

More detailed explanations of the contents of common blocks, and of the variable-dimensioned arrays stored in the large container array /A/, can be obtained in sections 5 and 6.

Subroutine HOMOG (MTAPE, ITAPE)

1. Arguments

Name	Type	Dimension	Definition
MTYPE	I*4	--	XS.M.MIN data set reference number
ITAPE	I*4	--	B.YOMOG data set reference number

2. Common Blocks

/PAR/

Variables used from this common block

Name	Type	Definition
MCSLTH	I*4	Length of composition mixture table in record type 4 of B.HOMOG
NCMP	I*4	Number of compositions, from B.HOMOG
NMAT	I*4	Number of materials, from B.HOMOG

/A/

Variables used from this common block

Name	Type	Definition
A	R*8	POINTR container array, which is described in section 6

3. Local Variables

Name	Type	Definition
IDEBUG	I*4	Printout option flag for POINTR 0 - no printout 1 - full printout
I5	I*4	Pointer to array DMTB2
I6	I*4	Pointer to array DMM1X

Name	Type	Definition
I7	I*4	Pointer to array VOLFRC
I8	I*4	Pointer to array MCSPEC
I9	I*4	Pointer to array DCTBL
I19	I*4	Pointer to array CMNAME
J1	I*4	Pointer to array XAC
J2	I*4	Pointer to array STOTC
J3	I*4	Pointer to array XREMC
J4	I*4	Pointer to array XTRC
J5	I*4	Pointer to array XFC
J6	I*4	Pointer to array XNFC
J7	I*4	Pointer to array CHIC
J8	I*4	Pointer to array NUPC
J9	I*4	Pointer to array NDNC
J10	I*4	Pointer to array XSCATC
J11	I*4	Pointer to array PNXFC
J12	I*4	Pointer to array DNCHIC
KA	I*4	Pointer to array SCHI
K1	I*4	Pointer to array XA
K2	I*4	Pointer to arrsy XTOT
K3	I*4	Pointer to array XREM
K4	I*4	Pointer to array XTR
K5	I*4	Pointer to array XF
K6	I*4	Pointer to array XNF
K7	I*4	Pointer to array CHI
K8	I*4	Pointer to array NUP

Name	Type	Definition
K9	I*4	Pointer to array NDN
K10	I*4	Pointer to array XSCAT
K11	I*4	Pointer to array PXNF
K12	I*4	Pointer to array DNCHI
K13	I*4	Pointer to array ICHI

4. Functions and tasks performed by this subroutine

The subroutine defines the member arrays for the POINTR container array and calls the subroutines which do the computations. In order to generate the member arrays, it reads record type 3 of the data set B.HOMOG.

5. Subprograms called by this subroutine

POINTR (ARC System subprogram)
PUTPNT (entry in POINTR)
GETPNT (entry in POINTR)
M2
M3
M4

6. Subprograms calling this subroutine

MAIN

7. Error messages generated by this subroutine - None

Main Program MAIN

1. Arguments - None

2. Common Blocks - None

3. Local Variables - None

4. Functions and tasks performed by this program

This program calls the subroutine HHOMOG.

5. Subprograms called by this program

HHOMOG

6. Subprograms calling this program - None

7. Error messages generated by this program

Subroutine M2 (DMMIX, VOLFRC, MCSPEC, DMTB2, DCTBL, ITAPE)

1. Arguments

Name	Type	Dimension	Definition
DMMIX	R*8	MCSLTH	Mixture table, from B.HOMOG
VOLFRC	R*8	MCSLTH	Volume fraction table, from B.HOMOG
MCSPEC	I*4	NCMP	Number of materials making up each composition, from HOMOG
DMTB2	R*8	MCSLTH	List of all materials, from B.HOMOG
DCTBL	R*8	NCMP	Labels of compositions, from B.HOMOG
ITAPE	I*4	--	Data set reference number for B.HOMOG

2. Common Blocks

/PAR/

Variables used from this common block

Name	Type	Definition
MCSLTH	I*4	Length of composition mixture table in record type 4 of B.HOMOG
NCMP	I*4	Number of compositions, from record type 3 of B.HOMOG
NMAT	I*4	Number of materials, from record type 3 of B.HOMOG

3. Local Variables - None

4. Functions and tasks performed by this subroutine

This subroutine reads record type 4 of B.HOMOG.

5. Subprograms called by this subroutine - None

6. Subprograms calling this subroutine

HOMOG

7. Error messages generated by this subroutine - None

Subroutine M3 (CMNAME, XA, XTOT, XREM, XTR, XF, XNF, CHI, NUP, NDN, XSCAT, PXNF, DNCHI, ICHI, SCHI, NGROUP, NMAT, NFAM, MTAPE, ISCHI)

1. Arguments

Name	Type	Dimension	Definition
CMNAME	R*8	NMAT	Material labels, from XS.M.MIN
XA	R*8	NMAT*NGROUP	Absorption cross section, from XS.M.MIN
XTOT	R*8	NMAT*NGROUP	Total cross section, from XS.M.MIN
XREM	R*8	NMAT*NGROUP	Removal cross section, from XS.M.MIN
XTR	R*8	NMAT*NGROUP	Transport cross section, from XS.M.MIN
XF	R*8	NMAT*NGROUP	Fission cross section, from XS.M.MIN
XNF	R*8	NMAT*NGROUP	Nu times the fission cross section, from XS.M.MIN
CHI	R*8	NMAT*NGROUP	Fission fraction spectrum for materials, from XS.M.MIN
NUP	I*4	XMAT*NGROUP	Number of groups of upscatter for each group, from XS.M.MIN
NDN	I*4	XMAT*NGROUP	Number of groups of downscatter for each group, from XS.M.MIN
XSCAT	R*8	NMAT*NGROUP	Total scattering cross section, from XS.M.MIN
PXNF	R*8	NMAT*NGROUP	Prompt Nu times the fission cross section, from XS.M.MIN
DNCHI	R*8	NMAT*NFAM *NGROUP	Delayed neutron fission fraction spectrum, from XS.M.MIN
ICHI	I*4	NMAT	Material fission spectrum flag, from XS.M.MIN

Name	Type	Dimension	Definition
SCHI	R*8	NGROUP*ISCHI	Fission fraction spectrum for set of materials, from XS.M.MIN
NGROUP	I*4	--	Number of energy groups
NMAT	I*4	--	Number of materials
NFAM	I*4	--	Number of families of delayed neutrons
MTAPE	I*4	--	Data set reference number for XS.M.MIN
ISCHI	I*4	--	Fission spectrum flag for the set of materials

2. Common Blocks - None

3. Local Variables - None

4. Functions and tasks performed by this subroutine

   This subroutine reads data set XS.M.MIN.

5. Subprograms called by this subroutine - None

6. Subprograms calling this subroutine

   HOMOG

7. Error messages generated by this subroutine - None

Subroutine M4 (DCTBL, MCSPEC, DMMIX, CMNAME, XAC, XTOTC, XREMC, XTRC, XFC, XNFC, CHIC, NUPC, NDNC, XSCATC, PXNFC, DNCHIC, XA, XTOT, XREM, XTR, XF, XNF, CHI, NUP, NDN, XSCAT, PXNF, DNCHI, ICHI, SCHI, VOLFRC, N, M, ML, ISCHI)

1. Arguments

Name	Type	Dimension	Definition
DCTBL	R*8	NCMP	Labels of compositions from B.HOMOG
MCSPEC	I*4	NCMP	Number of materials making up each composition, from B.HOMOG

Name	Type	Dimension	Definition
DMMIX	R*8	MCSLTH	Mixture table, from B.HOMOG
CMNAME	R*8	NMAT	Material labels, from XS.M.MIN
XAC	R*8	NGROUP	Composition absorption cross section
XTOTC	R*8	NGROUP	Composition total cross section
XREMC	R*8	NGROUP	Composition removal cross section
XTRC	R*8	NGROUP	Composition transport cross section
XFC	R*8	NGROUP	Composition fission cross section
XNFC	R*8	NGROUP	Composition Nu times fission cross section
CHIC	R*8	NGROUP*NGROUP	Composition fission fraction spectrum
NUPC	I*4	NGROUP	Number of groups of upscatter for each group for a composition
NDNC	I*4	NGROUP	Number of groups of downscatter for each group for a composition
XSCATC	R*8	NGROUP*NGROUP	Total composition scattering cross section
PXNFC	R*8	NGROUP	Composition prompt Nu times the fission cross section
DNCHIC	R*8	NFAM*NGROUP	Composition delayed neutron fission fraction spectrum
XA	R*8	NMAT*NGROUP	Material absorption cross section
XTOT	R*8	NMAT*NGROUP	Material total cross section
XREM	R*8	NMAT*NGROUP	Material removal cross section
XTR	R*8	NMAT*NGROUP	Material transport cross section
XF	R*8	NMAT*NGROUP	Material fission cross section
XNF	R*8	NMAT*NGROUP	Material Nu times fission cross section
CHI	R*8	NMAT*NGROUP	Material fission fraction spectrum

Name	Type	Dimension	Definition
NUP	I*4	NMAT*NGROUP	Number of groups of upscatter for each group for each material
NDN	I*4	NMAT*NGROUP	Number of groups of upscatter for each group for each material
XSCAT	R*8	NMAT*NGROUP *NGROUP	Material scattering cross section
PXNF	R*8	NMAT*NGROUP	Prompt Nu times the fission cross section for each material
DNCHI	R*8	NMAT*NFAM *NGROUP	Delayed neutron fission spectrum fraction for each material
ICHI	I*4	NMAT	Fission spectrum flag for each material
SCHI	R*8	NGROUP*ISCHI	Fission spectrum fraction for the set of materials on XS.M.MIN
VOLFRC	R*8	MCSLTH	Volume fraction table from HOMOG
N	I*4	--	Number of neutron energy groups
M	I*4	--	Number of families of delayed neutrons
ML	I*4	--	Number of materials
ISCHI	I*4	--	Fission spectrum flag for the set of materials on XS.M.MIN

2. Common Blocks

/PAR/

Variables used from this common block

Name	Type	Definition
MCSLTH	I*4	Length of composition mixture table in record type 4 of B.HOMOG
NCMP	I*4	Number of compositions
NMAT	I*4	Number of materials

3. Local Variables - None

4. Functions and tasks performed by this subroutine

This subroutine generates composition cross sections and writes the data set XS.C.MIN.

5. Subprograms called by this subroutine

SNIFF (ARC System subprogram)

6. Subprograms calling this subroutine

HOMOG

7. Error messages generated by this subroutine - None

5. HHOMOG (NUC007) Common Block Descriptions

This section provides more detailed information about the common blocks used by HHOMOG (NUC007) subroutines. The common blocks appear in alphabetical order by name.

For each common block, all variables are listed in order of appearance in the block by name and type, and the definition of each is given. In addition, there appears for each variable a list of the subprograms in which the value of the variable is set or altered.

A special case is the /A/ common block, which contains the container array A used by the dynamic storage allocation module POINTR (see ANL-7711 of this series). Section 6 contains a list of the names of all arrays which may be defined in the container array at any point in the execution of the module.

/A/

Name	Type	Subprograms where values are set or modified	Definition
A(60000)	R*8	HOMOG, M2, M3, M4	POINTR container array

/PAR/

Name	Type	Subprograms where values are set or modified	Definition
MCSLTH	I*4	HOMOG	Length of composition mixture table in record type 4 of B.HOMOG
NCMP	I*4	HOMOG	Number of compositions from B.HOMOG
NMAT	I*4	HOMOG	Number of materials, from B.HOMOG

6. HHOMOG (NUC007) Dynamic Storage Array Allocation

This section describes all arrays which may be defined by this module in common block /A/ using the facilities of the dynamic storage allocation module POINTR (see ANL-7711). The arrays are listed in alphabetical order by the name given them in the POINTR name table. For each array, the following information is given:

1. type;
2. dimension, in terms of module variables;
3. names of subprograms where action is taken that affects the status of the array in the container, followed in parentheses by the action that is taken in the subprogram (here, significant POINTR calls are to PUTPNT, which allocates space in the container for the array);
4. names of subprograms in which the value of elements of the array are set or altered;
5. the definition of the array contents.

If the meaning of a variable used as the dimension of an array is not known, it can be found in the subprogram in which a call to PUTPNT is made for that array.

Array Name	Type	Dimension	Subprograms issuing significant POINTR calls	Subprograms where values are set or modified	Definition
CHI	R*8	NMAT*NGROUP	HOMOG(PUTPNT)	M3	Fission fraction spectrum for each material, from XS.M.MIN
CHIC	R*8	NGROUP *NGROUP	HOMOG(PUTPNT)	M4	Fission spectrum fraction for a composition
CMNAME	R*8	NMAT	HOMOG(PUTPNT)	HOMOG	Material names, from XS.M.MIN
DCTBL	R*8	NCMP	HOMOG(PUTPNT)	M2	List of all compositions, from B.HOMOG
DMMIX	R*8	MCSLTH	HOMOG(PUTPNT)	M2	Mixture table, from B.HOMOG
DMTB2	R*8	NMAT	HOMOG(PUTPNT)	M2	Lis 1of all materials, from B.HOMOG
DNCHI	R*8	NMAT*NFAM *NGROUP	HOMOG(PUTPNT)	M3	Delayed neutron fission spectrum fraction for each material, from XS.M.MIN
DNCHIC	R*8	NFAM*NGROUP	HOMOG(PUTPNT)	M4	Delayed neutron fission spectrum fraction for a composition
ICHI	I*4	NMAT	HOMOG(PUTPNT)	M3	Fission spectrum flag for each material, from XS.M.MIN
MCSPEC	I*4	NCMP	HOMOG(PUTPNT)	M2	Number of materials making up each composition, from B.HOMOG

Array Name	Type	Dimension	Subprograms issuing significant POINTR calls	Subprograms where values are set or modified	Definition
NDN	I*4	NMAT*NGROUP	HOMOG(PUTPNT)	M3	Number of groups of down-scattering for each material, from XS.M.MIN
NDNC	I*4	NGROUP	HOMOG(PUTPNT)	M4	Number of groups of down-scattering for a composition
NUP	I*4	NMAT*NGROUP	HOMOG(PUTPNT)	M3	Number of groups of upscatter-ing for each material, from XS.M.MIN
NUPC	I*4	NGROUP	HOMOG(PUTPNT)	M4	Number of groups of upscatter-ing for a composition
PXNF	R*8	NMAT*NGROUP	HOMOG(PUTPNT)	M3	Prompt Nu times the fission cross section for each material, from XS.M.MIN
PXNFC	R*8	NGROUP	HOMOG(PUTPNT)	M4	Prompt Nu times the fission cross section for a composition
SCHI	R*8	NGROUP*ISCHI	HOMOG(PUTPNT)	M3	Fission spectrum fraction for the set of materials, from XS.M.MIN
VOLFRC	R*8	MCSLTH	HOMOG(PUTPNT)	M2	Volume fraction table, from B.HOMOG
XA	R*8	NMAT*NGROUP	HOMOG(PUTPNT)	M3	Absorption cross section for each material, from XS.M.MIN
XAC	R*8	NGROUP	HOMOG(PUTPNT)	M4	Absorption cross section for a composition

Array Name	Type	Dimension	Subprograms issuing significant POINTR calls	Subprograms where values are set or modified	Definition
XF	R*8	NMAT*NGROUP	HOMOG(PUTPNT)	M3	Fission cross section for each material, from XS.M.MIN
XFC	R*8	NGROUP	HOMOG(PUTPNT)	M4	Fission cross section for a composition
XNF	R*8	NGROUP	HOMOG(PUTPNT)	M3	Nu times the fission cross section for each material, from XS.M.MIN
XNFC	R*8	NGROUP	HOMOG(PUTPNT)	M4	Nu times the fission cross section for a composition
XREM	R*8	NMAT*NGROUP	HOMOG(PUTPNT)	M3	Removal cross section for each material, from XS.M.MIN
XREMC	R*8	NGROUP	HOMOG(PUTPNT)	M4	Removal cross section for a composition
XSCAT	R*8	NMAT*NGROUP *NGROUP	HOMOG(PUTPNT)	M3	Total scattering cross section for each material, from XS.M.MIN
XSCATC	R*8	NGROUP *NGROUP	HOMOG(PUTPNT)	M4	Total scattering cross section for a composition
XTOT	R*8	NMAT*NGROUP	HOMOG(PUTPNT)	M3	Total cross section for each material, from XS.M.MIN
XTOTC	R*8	NGROUP	HOMOG(PUTPNT)	M4	Total cross section for a composition

Array Name	Type	Dimension	Subprograms issuing significant POINTR calls	Subprograms where values are set or modified	Definition
XTR	R*8	NMAT*NGROUP	HOMOG(PUTPNT)	M3	Transport cross section for each material, from XS.M.MIN
XTRC	R*8	NGROUP	HOMOG(PUTPNT)	M4	Transport cross section for a composition

7. HHOMOG (NUC007) Data Set Usage

This section contains descriptions of all data sets used by this module. For each data set used, the following information is given:

1. the name of the data set, if it is an ARC System data set, or a description of its contents and function if it is a scratch data set used only within the module;

2. the record structure of the data set, if it is a scratch data set;

3. the names of subprograms in which the data set is read and/or written, along with a list of the record types which are read or written within each subprogram and the name of the variable in which the reference number of the data set is stored.

Complete descriptions of the record structure and contents of each ARC System data set can be found in ANL-7711 of this series.

Name or description of data set - B.HOMOG, Binary Version of the Homogenization Input

Record structure - ARC System data set

Read in subprograms	Record types	Reference variable
HOMOG	One of Composition Mixture Control Data (type 3)	ITAPE
M2	One of Composition Mixture Data (type 4)	ITAPE

Written in subprograms - None

Name or description of data set - XS.C.MIN, Macroscopic Composition Cross Sections

Record structure - ARC System data set

Read in subprograms - None

Written in subprograms	Record types	Reference variable
M4	All	ITAPE

Name or description of data set - XS.M.MIN, Macroscopic Material Cross Sections

Record structure - ARC System data set

Read in subprograms	Record types	Reference variable
HOMOG	One of Specifications (type 1)	MTAPE
M3	One of Set Chi (type 2) if ISCHI.GT.0 For all Materials, one of Material Specifications (type 3) and NGROUP of Material Macroscopic Cross Sections (type 4)	MTAPE

Written in subprograms - None

---

8. HHOMOG (NUC007) Error Messages

There are no error messages for this module.

9. HHOMOG (NUC007) Timing Information

For a problem with 40 compositions, 15 materials and 8 neutron energy groups, less than 10 seconds of computer time is needed on the IBM 360/75.

10. HHOMOG (NUC007) Sample Output

There is no sample output for this module.

PART FOUR.
MICROSCOPIC CROSS-SECTION GROUP COLLAPSE MODULE, MICCOL (AJC007)

Designed By - J. Hoover
Programmed By - J. Hoover
Documented By - J. Hoover

1. MICCOL (AJC007) Introduction

a. Description of Capabilities

This module collapses microscopic group cross sections to any number of user specified groups. The cross sections are obtained from a data set XS.ISO and the necessary collapsing data from A.COL. The collapsed group cross sections are written on data set XS.ISO2. Insufficient or inefficient data are not noted with an error message; processing continues until a fatal error occurs.

b. Standard Paths Which Utilize This Module, and Other Modules Utilized by Each Path

Modules Utilized by Each Path	Standard Paths Which Utilize this Module: STP004 Burnup Diffusion Theory
INHOMG (NUI001) Multigroup Cross Section Homogenization Specifications	X
HOMOG (NUC001) Multigroup Cross Section Homogenization	X
HHOMOG (NUC007) Material-to-Composition Cross Section Homogenization	X
GNIP (NUI002) Neutronics Input Processor	X
DIF1D (NUC002) One-dimensional Diffusion Theory k_{eff} and Source Calculations	X
D1DSCH (NUC004) One-dimensional Diffusion Theory Criticality Search	X

DARC1D

b. Standard Paths Which Utilize This Module, and Other Modules Utilized by Each Path (Contd.)

	Modules Utilized by Each Path	Standard Paths Which Utilize this Module
		STP004 Burnup Diffusion Theory
DARC2D	DIF2D (NUC005) Two-dimensional Diffusion Theory k_{eff} and Source Calculations	X
DARC2D	D2DSCH (NUC004) Two-dimensional Diffusion Theory Criticality Search	X
REBUS	INFUEL (FCI001) Fuel Cycle Specifications	X
REBUS	FUELCY (FCC001) Fuel Cycle Analysis	X
REBUS	MICCOL (AJC007) Microscopic Cross Section Collapse	X

c. Data Sets Utilized by This Module

Upper-interface Data Sets	Records Read
A.COL, Collapse Data Input	All
XS.ISO, Microscopic Group Cross Sections	All

Lower-interface Data Sets	Records Read
XS.ISO2, Microscopic Group Cross Sections	All

2. MICCOL (AJC007) Description of Problem and Method of Solution

a. Introduction

Few group cross sections must be prepared from multigroup cross section library set. The processing includes reading the multigroup cross section set and the collapsing specifications. The collapsed multigroup cross sections are then generated.

b. Method of Solution

Collapsed microscopic group cross sections are obtained by linear flux weighting. The equations are

$$\bar{\sigma}_x^i(J) = \sum_{j \text{ in } J} \sigma_x^i(j)\, \phi(j) / \sum_{j \text{ in } J} \phi(j) \tag{1}$$

$$\bar{\sigma}_s^i(J \to K) = \sum_{k \text{ in } K} \sum_{j \text{ in } J} \sigma_s^i(j \to k)\, \phi(j) / \sum_{j \text{ in } J} \phi(j) \tag{2}$$

where

j is the jth group

J is the Jth collapsed group

$\sigma_x^i(j)$ is the microscopic cross section for isotope i of type x in group j. The transport cross section is considered in this category.

$\phi(j)$ is the flux in group j

$\sigma_s^i(j \to k)$ is the microscopic scattering cross section from group j to group k for isotope i

k is the kth group

K is the Kth collapsed group

$\bar{\sigma}_x^i(J)$ is the collapsed microscopic cross section for isotope i of type x in group J

$\bar{\sigma}_s^i(J \to K)$ is the collapsed microscopic scattering cross section from group J to group K for isotope i.

3. MICCOL (AJC007) Description of Module Flow

This section describes the overlay structure of this module and the flow of logic through the subprograms.

Section a. consists of an overlay structure diagram, showing the ARC System segments and MICCOL (AJC007) module segments required by this module and their positions in the overlay heirarchy. This is followed by a list of the subroutines located in each MICCOL (AJC007) module segment.

Section b. illustrates the flow of logic through the subprograms of this module, and section c. describes this flow in terms of the module's functions.

a. Overlay Structure Diagram

```
MICCOL
SYSTEM
BPOINTER
LINK
LOAD
IBCOM
```

No overlays

Subprograms contained in each MICCOL (AJC007) module segment

```
MAIN
MICCOL
CCHI
CCS
CPCS
FRPNC
PCCHI
M1
M2
M3
M4
```

b. Diagrammatic Subprogram Logic Flow

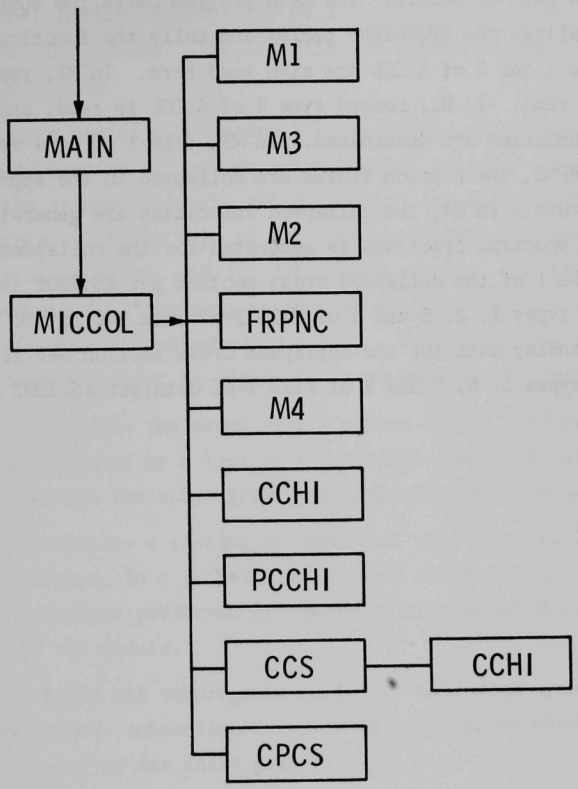

c. Descriptive Subprogram Logic Flow

The MICCOL module is entered when a CALL LINK ('AJC007') statement appears in a path or module. The main program calls the subroutine MICCOL, which initializes the BPOINTER* tables and calls the functional subroutines. Records type 1 and 2 of A.COL are also read here. In M1, record type 3 of A.COL is read. In M2, record type 4 of A.COL is read, and the collapsed lethargy boundaries are determined. In M3, file 1 of data set XS.ISO is read. In FRPNC, the neutron fluxes are collapsed to the appropriate energy group structure. In M4, the collapsed velocities are generated. In CCHI, the fission spectrum fractions is generated for the collapsed group structure. In PCCHI file 1 of the collapsed cross section set XS.ISO2 is written. In CCS, record types 1, 2, 3 and 4 of file 2 of data set XS.ISO are read. The corresponding data for the collapsed cross section set is generated and record types 5, 6, 7 and 8 of file 2 of data set XS.ISO2 are written.

*ARC System subprogram package.

4. MICCOL (AJC007) Subprogram Descriptions

This section contains descriptions of all subprograms which are part of the MICCOL (AJC007) module. The descriptions appear in alphabetical order by subprogram name.

Each subprogram description begins with a listing of the calling sequence of the subroutine and of its entry points, if any. Subsection 1 is a list of the arguments of the subroutine and its entry points, in order of appearance, with the type of each argument, its dimensions in the subprogram if it is an array, and its definition or use. The two types of variables used are I*4, denoting an integer fullword (32 bits); and R*8, denoting a floating-point doubleword (64 bits). Variables used as array dimensions are defined either as arguments or as members of common blocks.

Subsection 2 contains the names of all common blocks used by the subprogram. Each is followed by a list of the variables actually used from the common block within the subprogram, together with their definitions.

Subsection 3 contains a listing of important variables which are local to the subprogram, in a format like that of subsection 1. Subsection 4 describes the functions performed by the subprogram in terms of the overall purpose of the module.

Subsection 5 lists all subprograms called by this subprogram or any of its entry points; subsection 6 lists the subprograms which call this subprogram or any of its entry points.

More detailed explanations of the contents of common blocks, and of the variable-dimensioned arrays stored in the large container array /A/, can be obtained in sections 5 and 6.

Subroutine CCS (STR, SCAP, SNALF, SNP, ANISO, SFIS, FISNU, CHI, CHIC, E, EC, FP, FPC, CSTR, CSCAP, CSNALF, CSNP, CANISO, CSFIS, CFISNU, MTAPE, N, M)

1. Arguments

Name	Type	Dimension	Definition
STR	R*8	NGROUP	Transport cross section
SCAP	R*8	NGROUP	Radiative capture cross section
SNALF	R*8	NGROUP	(n,α) cross section
SNP	R*8	NGROUP	(n,p) cross section
ANISO	R*8	NGROUP	Isotropic elastic self-scattering cross section
SFIS	R*8	NGROUP	Fission cross section
FISNU	R*8	NGROUP	Number of fission neutrons per fission times the fission cross section
CHI	R*8	NGROUP*NGROUP	Fission spectrum fractions
CHIC	R*8	NGROUP*NGROUP	Fission spectrum fractions for the collapsed cross section set
E	R*8	NCGROU + 1	Collapsed energy group boundaries
FEC	R*8	NCGROU + 1	Collapsed neutron flux
FP	R*8	NGROUP	Neutron flux
FPC	R*8	NCGROU	Collapsed neutron flux
CSTR	R*8	NCGROU	Collapsed transport cross section
CSCAP	R*8	NCGROU	Collapsed radiative capture cross section
CSNALF	R*8	NCGROU	Collapsed (n,α) cross section
CSNP	R*8	NCGROU	Collapsed (n,p) cross section
CANISO	R*8	NCGROU	Collapsed isotropic elastic self-scattering cross section

Name	Type	Dimension	Definition
CSFIS	R*8	NCGROU	Collapsed fission cross section
CFISNU	R*8	NCGROU	Number of fission neutrons per fission times the collapsed fission cross section
MTAPE	I*4	--	Data set reference number for XS.ISO
N	I*4	--	Number of energy groups
M	I*4	--	Number of collapsed energy groups

2. Common Blocks

/BLFC/

Variables used from this common block

Name	Type	Definition
ARRAY	R*8	BPOINTER container array

/CCF/

Variables used from this common block

Name	Type	Definition
ISON	R*8	Isotope name
ICHI	I*4	Fission spectrum flag
LIN	I*4	Maximum order of inelastic scattering
LEL	I*4	Maximum order of elastic scattering
LN2N	I*4	Maximum order of (n,2n) scattering

/CLC/

Variables used from this common block

Name	Type	Definition
NISO	I*4	Number of isotopes in set
ICHIC	I*4	Fission spectrum flag for the collapsed cross section set

/IG/

Variables used from this common block

Name	Type	Definition
I20	I*4	Pointer to array CHI
I21	I*4	Pointer to array CHIC
I11	I*4	Pointer to array E
I6	I*4	Pointer to array EC

3. Local Variables - None

4. Functions and tasks performed by this subroutine

This subroutine reads record types 1, 2, 3 and 4 of XS.ISO, generates the appropriate collapsed data and writes record types 1, 2, 3 and 4 of the collapsed cross section set XS.ISO2.

5. Subprograms called by this subroutine

CCHI
DUMP (ARC System subprogram)
CLEAR (ARC System subprogram)

6. Subprograms calling this subroutine

MICCOL

7. Error messages generated by this subroutine - None

Subroutine CCHI (CHI, CHIC, E, EC, NGROUP)

1. Arguments

Name	Type	Dimension	Definition
CHI	R*8	NGROUP*NGROUP	Fission spectrum fractions for the original cross section set
CHIC	R*8	NGROUP*NGROUP	Fission spectrum fractions for the collapsed cross section set

Name	Type	Dimension	Definition
E	R*8	NGROUP	Energy group boundaries
EC	R*8	NCGROU	Collapsed energy group boundaries
NGROUP	I*4	--	Number of neutron energy groups

2. Common Blocks

/BLFC/

Variables used from this common block

Name	Type	Definition
ARRAY	R*8	BPOINTER container array

/CCF/

Variables used from this common block

Name	Type	Definition
ISON	R*8	Isotope name
ICHI	I*4	Fission spectrum flag
LIN	I*4	Maximum order of inelastic scattering
LEL	I*4	Maximum order of elastic scattering
LN2N	I*4	Maximum order of (n,2n) scattering

/CLC/

Variables used from this common block

Name	Type	Definition
NISO	I*4	Number of isotopes in set
ICHIC	I*4	Fission spectrum flag for the collapsed cross section set

3. Local Variables - None

4. Functions and tasks performed by this subroutine

This subroutine computes the fission spectrum fractions for the collapsed cross section set.

5. Subprogram called by this subroutine

DUMP (ARC System subprogram)

6. Subprograms calling this subroutine

MICCOL
CCS

7. Error messages generated by this subroutine - None

Subroutine CPCS (SINL, SELT, SN2N, FP, FPC, E, EC, LINDN, LINUP, LELDN, LELUP, LN2NDN, LN2NUP, CSINL, CSELT, CSN2N, KI, LIP, MTAPE, N, M, LT)

1. Arguments

Name	Type	Dimension	Definition
SINL	R*8	NGROUP*NGROUP	Inelastic scattering cross section
SELT	R*8	NGROUP*NGROUP	Elastic scattering cross section
SN2N	R*8	NGROUP*NGROUP	(n,2n) scattering cross section
FP	R*8	NGROUP	Neutron flux
FPC	R*8	NGROUP	Collapsed neutron flux
E	R*8	NGROUP + 1	Energy group boundaries
EC	R*8	NCGROU + 1	Collapsed energy group boundaries
LINDN	I*4	NGROUP	Number of inelastic downscatters
LINUP	I*4	NGROUP	Number of inelastic upscatters
LELDN	I*4	NGROUP	Number of elastic downscatter groups

Name	Type	Dimension	Definition
LELUP	I*4	NGROUP	Number of elastic upscatter groups
LN2NDN	I*4	NGROUP	Number of (n,2n) upscatter groups
LN2NUP	I*4	NGROUP	Number of (n,2n) downscatter groups
CSINL	R*8	NCGROUP*NCGROU	Collapsed inelastic scattering cross section
CSELT	R*8	NCGROU*NCGROU	Collapsed elastic scattering cross section
CSN2N	R*8	NCGROU*NCGROU	Collapsed (n,2n) scattering cross section
KI	I*4	NCGROU*6	Group numbers identifying source group from which scattering occurs
LIP	I*4	NGROUP*6	Number of upscatter and downscatter groups for inelastic, elastic and (n,2n) scattering
MTAPE	I*4	--	Data set reference number for the cross section set XS.ISO
N	I*4	--	Number of energy groups
M	I*4	--	Number of collapsed energy groups
LT	I*4	--	Order of scattering cross section being processed

2. Common Blocks

/BLFC/

Variables used from this common block

Name	Type	Definition
ARRAY	R*8	BPOINTER container array

/CCF/

Variables used from this common block

Name	Type	Definition
ISON	R*8	Isotope name

Name	Type	Definition
ICHI	I*4	Fission spectrum flag
LIN	I*4	Maximum order of inelastic scattering
LEL	I*4	Maximum order of elastic scattering
LN2N	I*4	Maximum order of (n,2n) scattering

/CLC/

Variables used from this common block

Name	Type	Definition
NISO	I*4	Number of isotopes in set
ICHIC	I*4	Fission spectrum flag for the collapsed cross section set

/TAPEN/

Variables used from this common block

Name	Type	Definition
LTAPE	I*4	Data set reference number for the collapsed cross section set

3. Local Variables

Name	Type	Definition
LL	I*4	The order of the scattering being processed
LI	I*4	Highest energy group from which downscattering occurs
LII	I*4	Lowest energy group index from which upscattering occurs
LINUPC	I*4	Number of inelastic upscatter groups for the collapsed cross section set
LINDNC	I*4	Number of inelastic downscatter groups for the collapsed cross section set

Name	Type	Definition
LELUPC	I*4	Number of elastic upscatter groups for the collapsed cross section set
LELDNC	I*4	Number of elastic downscatter groups for the collapsed cross section set
LN2NUC	I*4	Number of (n,2n) upscatter group for the collapsed cross section set
LN2NDC	I*4	Number of (n,2n) downscatter groups for the collapsed cross section set
K2	I*4	Inelastic scattering occurs from collapsed group K2
K4	I*4	Elastic scattering occurs from collapsed group K4
K6	I*4	(n,2n) scattering occurs from collapsed group K6
JJ	I*4	Collapsed group index
KK	I*4	Maximum number of downscatter or upscatter groups for scattering into collapsed group JJ
LL	I*4	Number of downscatter or upscatter groups for scattering into collapsed group JJ from collapsed group L

4. Functions and tasks performed by this subroutine

This subroutine reads record types 5, 6, 7 and 8 of file 2 of XS.ISO and generates the appropriate collapsed cross section data.

5. Subprograms called by this subroutine

CLEAR (ARC System subprogram)

6. Subprograms calling this subroutine

MICCOL

7. Error messages generated by this subroutine - None

Subroutine FRPNC (FP, FPC, E, EC, NGROUP, NCGROU)

1. Arguments

Name	Type	Dimension	Definition
FP	R*8	NGROUP	Flux (n/cm^2/sec) from A.COL
FPC	R*8	NCGROU	Collapsed flux (n/cm^2/sec)
E	R*8	NGROUP + 1	Energy group boundaries
EC	R*8	NCGROU + 1	Energy group boundaries for collapsed cross section set
NGROUP	I*4	--	Number of neutron energy groups
NCGROU	I*4	--	Number of collapsed neutron energy groups

2. Common Blocks

/BLFC/

Variables used from this common block

Name	Type	Definition
ARRAY	R*8	BPOINTR container array

3. Local Variables - None

4. Functions and tasks performed by this subroutine

The subroutine calculates the collapsed neutron flux.

5. Subprograms called by this subroutine - None

6. Subprograms calling this subroutine

MICCOL

7. Error messages generated by this subroutine - None

Main Program MAIN

1. Arguments - None

2. Common Blocks - None

3. Local Variables - None

4. Functions and tasks performed by this program

   This program calls the subroutine MICCOL.

5. Subprograms called by this program

   MICCOL

6. Subprograms calling this program - None

7. Error messages generated by this program - None

Subroutine M1 (FP, NTAPE, NGROUP)

1. Arguments

Name	Type	Dimension	Definition
FP	R*8	NGROUP	Neutron flux
NTAPE	I*4	--	Data set reference number for A.COL
NGROUP	I*4	--	Number of neutron energy groups

2. Common Blocks

/CLC/

Variables used from this common block

Name	Type	Definition
NISO	I*4	Number of isotopes in set
ICHIC	I*4	Fission spectrum flag for the collapsed cross section set

3. Local Variables - None

4. Functions and tasks performed by this subroutine

This subroutine reads the flux from data set A.COL.

5. Subprograms called by this subroutine - None

6. Subprograms calling this subroutine

MICCOL

7. Error messages generated by this subroutine - None

Subroutine M2 (EC, VELC, UC, KE, E, LTAPE, NCGROU)

1. Arguments

Name	Type	Dimension	Definition
EC	R*8	NCGROU + 1	Collapsed energy group boundaries
VELC	R*8	NCGROU	Velocities for the collapsed cross section set
UC	R*8	NCGROU + 1	Lethargies for the collapsed cross section set

Name	Type	Dimension	Definition
KE	I*4	NCGROU + 1	Group correspondence factors from card type 3 of A.COL
E	R*8	NGROUP	Energy boundaries
LTAPE	I*4	--	Data set reference number for A.COL
NCGROU	I*4	--	Number of collapsed groups

2. Common Blocks

/BLFC/

Variables used from this common block

Name	Type	Definition
ARRAY	R*8	BPOINTER container array

/CLC/

Variables used from this common block

Name	Type	Definition
NISO	I*4	Number of isotopes in set
ICHIC	I*4	Fission spectrum flag for the collapsed cross section set

3. Local Variables - None

4. Functions and tasks performed by this subroutine

The subroutine reads record type 4 of A.COL and generates the collapsed energy boundaries and lethargy values.

5. Subprograms called by this subroutine - None

6. Subprograms calling this subroutine

MICCOL

7. Error messages generated by this subroutine - None

Subroutine M3 (ISONME, LOCA, LOCC, E, U, VEL, CHI, MTAPE, NGROUP, NCGROU)

1. Arguments

Name	Type	Dimension	Definition
ISONME	R*8	NISO	Isotope name list from record type 2 of XS.ISO
LOCA	I*4	NISO	Location of cross section data for each isotope in the second file of XS.ISO
LOCC	I*4	NISO	Location of cross section data for each isotope in the second file of the collapsed cross section set XS.ISO2
E	R*8	NGROUP + 1	Energy boundaries
U	R*8	NGROUP + 1	Lethargy boundaries
VEL	R*8	NGROUP	Velocity for each group
CHI	R*8	NGROUP*NGROUP	Fission spectrum fractions
MTAPE	I*4	--	Data set reference number for XS.ISO
NGROUP	I*4	--	Number of groups
NCGROU	I*4	--	Number of collapsed groups

2. Common Blocks

/BLFC/

Variables used from this common block

Name	Type	Definition
ARRAY	R*8	BPOINTER container array

/CCF/

Variables used from this common block

Name	Type	Definition
ISON	R*8	Isotope name

Name	Type	Definition
ICHI	R*8	Fission spectrum flag
LIN	I*4	Maximum order of inelastic scattering
LEL	I*4	Maximum order of elastic scattering
LN2N	I*4	Maximum order of (n,2n) scattering

/CLC/

Variables used from this common block

Name	Type	Definition
NISO	I*4	Number of isotopes in set
ICHIC	I*4	Fission spectrum flag for the collapsed cross section set

3. Local Variables

Name	Type	Definition
LA	I*4	Number of records in file 2 of XS.ISO for a particular isotope

4. Functions and tasks performed by this subroutine

This subroutine reads record types 2, 3 and 4 of XS.ISO and generates the location array for the collapsed cross section set XS.ISO2, which specifies the number of records in the second file to be skipped to read data for each isotope.

5. Subprograms called by this subroutine - None

6. Subprograms calling this subroutine

MICCOL

7. Error messages generated by this subroutine - None

Subroutine M4 (VELC, VEL, FPC, FP, EC, E, NGROUP, NCGROU)

1. Arguments

Name	Type	Dimension	Definition
VELC	R*8	NCGROU	Velocity for each collapsed energy group
VEL	R*8	NGROUP	Velocity for each energy group
FPC	R*8	NCGROU	Collapsed neutron flux
EP	R*8	NGROUP	Neutron flux used to collapse the cross section data
EC	R*8	NCGROU + 1	Collapsed energy boundaries
E	R*8	NGROUP + 1	Energy boundaries of the original cross section set
NGROUP	I*4	--	Number of groups
NCGROU	I*4	--	Number of collapsed energy groups

2. Common Blocks

/BLFC/

Variables used from this common block

Name	Type	Definition
ARRAY	R*8	BPOINTER container array

3. Local Variables - None

4. Functions and tasks performed by this subroutine

This subroutine computes the velocities for collapsed energy group structure.

5. Subprograms called by this subroutine - None

6. Subprograms calling this subroutine

MICCOL

7. Error messages generated by this subroutine - None

Subroutine MICCOL

1. Arguments - None

2. Common Blocks

/BLFC/

Variables used from this common block

Namm	Type	Definition
ARRAY	R*8	BPOINTER container array

/CCF/

Variables used from this common block

Name	Type	Definition
ISON	R*8	Isotope name
ICHI	I*4	Fission spectrum flag
LIN	I*4	Maximum order of inelastic scattering
LEL	I*4	Maximum order of elastic scattering
LN2N	I*4	Maximum order of (n,2n) scattering

/CLC/

Variables used from this common block

Name	Type	Definition
NISO	I*4	Number of isotopes in set

Name	Type	Definition
ICHIC	I*4	Fission spectrum flag for the collapsed cross section set

/IG/

Variables used from this common block

Name	Type	Definition
I20	I*4	Pointer to array CHI
I21	I*4	Pointer to array CHIC
I11	I*4	Pointer to array E
I6	I*4	Pointer to array EC

/TLC/

Variables used from this common block

Name	Type	Definition
NCGROU	I*4	Number of collapsed neutron energy groups
NGROUP	I*4	Number of original neutron energy groups

3. Local Variables

Name	Type	Definition
MTAPE	I*4	XS.ISO data set reference number
LTAPE	I*4	A.COL data set reference number
ANAME	R*8	Data set reference name
ICARD	I*4	Number of records of a particular type
I1	I*4	Pointer to array FP
I2	I*4	Pointer to array SINL
I3	I*4	Pointer to array SELT
I4	I*4	Pointer to array SN2N

Name	Type	Definition
I5	I*4	Pointer to array FPC
I6	I*4	Pointer to array EC
I7	I*4	Pointer to array UC
I8	I*4	Pointer to array VELC
I9	I*4	Pointer to array ISONME
I10	I*4	Pointer to array LOCA
I11	I*4	Pointer to array E
I13	I*4	Pointer to array VEL
I12	I*4	Pointer to array U
I14	I*4	Pointer to array STR
I15	I*4	Pointer to array SCAP
I16	I*4	Pointer to array SNALF
I17	I*4	Pointer to array ANISO
I18	I*4	Pointer to array SFIS
I19	I*4	Pointer to array FISNU
I20	I*4	Pointer to array CHI
I21	I*4	Pointer to array CHIC
I23	I*4	Pointer to array LINUP
I24	I*4	Pointer to array LINDN
I25	I*4	Pointer to array LELUP
I26	I*4	Pointer to array LELDN
I27	I*4	Pointer to array LN2NUP
I28	I*4	Pointer to array LN2NDN
I29	I*4	Pointer to array SNP
I30	I*4	Pointer to array SNP
I31	I*4	Pointer to array CSTR

Name	Type	Definition
I32	I*4	Pointer to array CSNALF
I33	I*4	Pointer to array CSNP
I34	I*4	Pointer to array CANISO
I35	I*4	Pointer to array CSFIS
I36	I*4	Pointer to array CFISNU
I37	I*4	Pointer to array CSINL
I38	I*4	Pointer to array CSELT
I39	I*4	Pointer to array CSN2N
I40	I*4	Pointer to array KI
I41	I*4	Pointer to array LIP
I42	I*4	Pointer to array KE
I43	I*4	Pointer to array LOCC
I	I*4	DO loop index for record types 1, 2, 3 and 4 of file 2 of XS.ISO
LL	I*4	DO loop index for record types 5, 6, 7 and 8 of file 2 of XS.ISO
LMAX	I*4	Maximum order of scattering data in XS.ISO
MAXSIZ	I*4	Size of main core BPOINTER container (60000)
MAXBLK	I*4	Size of bulk storage BPOINTER container (100000)

4. Functions and tasks performed by this subroutine

The subroutine defines the member arrays for the BPOINTER container array and calls the subroutines which do the computations. In order to generate the member arrays, the subroutine reads record type 2 of A.COL and record type 1 of XS.ISO.

5. Subprograms called by this subroutine

POINTR (ARC System subprogram)
PUTPNT (entry in BPOINTER)
GETPNT (entry in BPOINTER)
DUMP (ARC System Subprogram)
BULK (entry in BPOINTER)
FREE (entry in BPOINTER)
SNIFF (ARC System subprogram)
CCHI
CCS
CPCS
FRPNC
PCCHI
M1
M2
M3
M4

6. Subprograms calling this subroutine

MAIN

7. Error messages generated by this subroutine - None

Subroutine PCCHI (ISONME, LOCC, EC, UC, VELC, CHIC, NGROUP, NCGROU)

1. Arguments

Name	Type	Dimension	Definition
ISONME	R*8	NISO	List of isotope names
LOCC	I*4	NISO	Location of data for each isotope in the second file of the collapsed cross section set
EC	R*8	NCGROUP + 1	Collapsed energy group boundaries
UC	R*8	NCGROU + 1	Collapsed lethargy boundaries
VELC	R*8	NCGROU	Collapsed group velocities
CHIC	R*8	NGROUP*NGROUP	Fission spectrum fractions for the collapsed cross section set
NGROUP	I*4	--	Number of neutron energy groups
NCGOUR	I*4	--	Number of collapsed neutron energy groups

2. Common Blocks

/BLFC/

Variables used from this common block

Name	Type	Definition
ARRAY	R*8	BPOINTER container array

/CCF/

Variables used from this common block

Name	Type	Definition
ISON	R*8	Isotope name
ICHI	I*4	Fission spectrum flag
LIN	I*4	Maximum order of inelastic scattering
LEL	I*4	Maximum order of elastic scattering
LN2N	I*4	Maximum order of (n,2n) scattering

/CLC/

Variables used from this common block

Name	Type	Definition
NISO	I*4	Number of isotopes in set
ICHIC	I*4	Fission spectrum flag for the collapsed cross section set

/TAPEN/

Variables used from this common block

Name	Type	Definition
LTAPE	I*4	Data set reference number for the collapsed cross section set (XS.ISO2)

3. Local Variables - None

4. Functions and tasks performed by this subroutine

This subroutine writes the first file of the collapsed cross section set (XS.ISO2).

5. Subprograms called by this subroutine

SNIFF (ARC System Subprogram)

6. Subprograms calling this subroutine

MICCOL

7. Error messages generated by this subroutine - None

5. MICCOL (AJC007) Common Block Descriptions

This section provides more detailed information about the common blocks used by MICCOL (AJC007) subroutines. The common blocks appear in alphabetical order by name.

For each common block, all variables are listed in order of appearance in the block by name and type, and the definition of each is given. In addition, there appears for each variable a list of the subprograms in which the value of the variable is set or altered.

A special case is the /BLFC/ common block, which contains the container array A used by the dynamic storage allocation module BPOINTER (see ANL-7711 of this series). Section 6 contains a list of the names of all arrays which may be defined in the container array at any point in the execution of the module.

/BLFC/

Name	Type	Subprograms where values are set or modified	Definition
ARRAY(1)	R*8	MICCOL,FRPNC,CCHI BPOINTER CCS,CPCS,PCCHI, M1,M2,M3,M4	container array

/CCF/

Name	Type	Subprograms where values are set or modified	Definition
ISON	R*8	CCS	Isotope name
ICHI	I*4	CCS	Fission spectrum flag
LIN	I*4	CCS	Maximum order of inelastic scattering
LEL	I*4	CCS	Maximum order of elastic scattering
LN2N	I*4	CCS	Maximum order of (n,2n) scattering

/CLC/

Name	Type	Subprograms where values are set or modified	Definition
NISO	I*4	MICCOL	Number of isotopes
ICHIC	I*4	CCHI	Fission spectrum flag for the collapsed cross section set

/IG/

Name	Type	Subprograms where values are set or modified	Definition
I20	I*4	MICCOL	Pointer to array CHI
I21	I*4	MICCOL	Pointer to array CHIC
I11	I*4	MICCOL	Pointer to array E
I6	I*4	MICCOL	Pointer to array EC

/TLC/

Name	Type	Subprograms where values are set or modified	Definition
NCGROU	I*4	MICCOL	Number of collapsed neutron energy groups
NGROUP	I*4	MICCOL	Number of original neutron energy groups

6. MICCOL (AJC007) Dynamic Storage Array Allocation

This section describes all arrays which may be defined by this module in common block /BLFC/ using the facilities of the dynamic storage allocation module BPOINTER (see ANL-7711 of this series). The arrays are listed in alphabetical order by the name given them in the BPOINTER name table. For each array, the following information is given:

1. type;
2. dimension, in terms of module variables;
3. names of subprograms where action is taken that affects the status of the array in the container, followed in parentheses by the action that is taken in the subprogram (here, significant BPOINTER calls are to PUTPNT, which allocates space in the container for the array);
4. names of subprograms in which the value of elements of the array are set or altered;
5. the definition of the array contents.

If the meaning of a variable used as the dimension of an array is not known, it can be found in the subprogram in which a call to PUTPNT is made for that array.

Array Name	Type	Dimension	Subprograms issuing significant BPOINTER calls	Subprograms where values are set or modified	Definition
ANISO	R*8	NGROUP	MICCOL(PUTPNT)	CCS	Isotropic elastic self-scattering cross section
CANISO	R*8	NCGROU	MICCOL(PUTPNT)	CCS	Collapsed isotropic elastic self-scattering cross section
CHI	R*8	NGROUP* NGROUP	MICCOL(PUTPNT)	CCS	Fission spectrum fraction
CHIC	R*8	NCGROU* NCGROU	MICCOL(PUTPNT)	CCHI	Fission spectrum fraction for the collapsed cross section set
CFISNU	R*8	NCGROU	MICCOL(PUTPNT)	CCS	Number of fission neutrons per fission times the collapsed fission cross section
CSCAP	R*8	NCGROU	MICCOL(PUTPNT)	CCS	Collapsed radiative capture cross section
CSELT	R*8	NCGROU* NCGROU	MICCOL(PUTPNT)	CPCS	Collapsed elastic scattering cross section
CSFIS	R*8	NCGROU	MICCOL(PUTPNT)	CCS	Collapsed fission cross section
CSINL	R*8	NCGROU	MICCOL(PUTPNT)	CPCS	Collapsed inelastic scattering cross section
CSNALF	R*8	NCGROU	MICCOL(PUTPNT)	CCS	Collapsed (n,α) cross section
CSNP	R*8	NCGROU	MICCOL(PUTPNT)	CCS	Collapsed (n,p) cross section

Array Name	Type	Dimension	Subprograms issuing significant BPOINTER calls	Subprograms where values are set or modified	Definition
CSN2N	R*8	NCGROU* NCGROU	MICCOL(PUTPNT)	CPCS	Collapsed (n,2n) scattering cross section
CSTR	R*8	NCGROU	MICCOL(PUTPNT)	CCS	Collapsed transport cross section
E	R*8	NGROUP + 1	MICCOL(PUTPNT)	M3	Energy group boundaries
EC	R*8	NCGROU + 1	MICCOL(PUTPNT)	M2	Collapsed energy group boundaries
FISNU	R*8	NGROUP	MICCOL(PUTPNT)	CCS	Number of fission neutrons per fission times the fission cross section
FR	R*8	NGROUP	MICCOL(PUTPNT)	M1	Neutron flux
FPC	R*8	NCGROU	MICCOL(PUTPNT)	FRPNC	Collapsed neutron flux
ISONME	R*8	NISO	MICCOL(PUTPNT)	M3	Isotope name list
KE	I*4	NCGROU + 1	MICCOL(PUTPNT)	M2	Group correspondence factors from card type 4 of A.COL
KI	I*4	NCGROU*6	MICCOL(PUTPNT)	CPCS	Group numbers identifying source group from which scattering occurs
LELDN	I*4	NGROUP	MICCOL(PUTPNT)	CPCS	Number of elastic downscatters
LELUP	I*4	NGROUP	MICCOL(PUTPNT)	CPCS	Number of elastic upscatters
LINDN	I*4	NGROUP	MICCOL(PUTPNT)	CPCS	Number of inelastic downscatters

Array Name	Type	Dimension	Subprograms issuing significant BPOINTER calls	Subprograms where values are set or modified	Definition
LINUP	I*4	NGROUP	MICCOL(PUTPNT)	CPCS	Number of inelastic upscatters
LIP	I*4	NGROUP*6	MICCOL(PUTPNT)	CPCS	Number of upscatter and downscatter groups for inelastic elastic and (n,2n) scattering
LN2NDN	I*4	NGROUP	MICCOL(PUTPNT)	CPCS	Number of (n,2n) downscatter groups
LN2NUP	I*4	NGROUP	MICCOL(PUTPNT)	CPCS	Number of (n,2n) upscatter groups
LOCA	I*4	NISO	MICCOL(PUTPNT)	M3	Location of cross section data for each isotope in the second file of XS.ISO
LOCC	I*4	NISO	MICCOL(PUTPNT)	M3	Location of cross section data for each isotope in the second file of the collapsed cross section set XS.ISOR
SCAP	R*8	NGROUP	MICCOL(PUTPNT)	CCS	Radiative capture cross section
SELT	R*8	NGROUP* NGROUP	MICCOL(PUTPNT)	CPCS	Elastic scattering cross section
SFIS	R*8	NGROUP	MICCOL(PUTPNT)	CCS	Fission cross section
SINL	R*8	NGROUP* NGROUP	MICCOL(PUTPNT)	CPCS	Inelastic scattering cross section
SNALF	R*8	NGROUP	MICCOL(PUTPNT)	CCS	(n,α) cross section

Array Name	Type	Dimension	Subprograms issuing significant BPOINTER calls	Subprograms where values are set or modified	Definition
SNP	R*8	NGROUP	MICCOL(PUTPNT)	CCS	(n,p) cross section
SN2N	R*8	NGROUP* NGROUP	MICCOL(PUTPNT)	CPCS	(n,2n) scattering cross section
STR	R*8	NGROUP	MICCOL(PUTPNT)	CCS	Transport cross section
U	R*8	NGROUP + 1	MICCOL(PUTPNT)	M3	Lethargy boundaries
UC	R*8	NCGROU + 1	MICCOL(PUTPNT)	M2	Lethargy boundaries for the collapsed cross section set
VEL	R*8	NGROUP	MICCOL(PUTPNT)	M3	Velocity for each group
VELC	R*8	NCGROU	MICCOL(PUTPNT)	M4	Velocity for each collapsed group

7. MICCOL (AJC007) Data Set Usage

This section contains descriptions of all data sets used by this module. For each data set used, the following information is given:

1. the name of the data set, if it is an ARC System data set, or a description of its contents and function if it is a scratch data set used only within the module;

2. the record structure of the data set, if it is a scratch data set;

3. the names of subprograms in which the data set is read and/or written, along with a list of the record types which are read or written within each subprogram and the name of the variable in which the reference number of the data set is stored.

Complete descriptions of the record structure and contents of each ARC System data set can be found in ANL-7711 of this series.

Name of description of data set - A.COL, Collapse Data

Record structure - ARC System data set

Read in subprograms	Record types	Reference variable
MICCOL	1 and 2	LTAPE
M1	3	NTAPE
M2	4	LTAPE

Written in subprograms - None

Name or description of data set - XS.ISO, Microscopic Group Cross Sections

Record structure - ARC System data set

Read in subprograms	Record types	Reference variable
MICCOL	1 of the first file	MTAPE
M3	2, 3, and 4 of the first file	MTAPE
CCS	1, 2, 3 and NGROUP of 4 for the second file	MTAPE
CPCS	5, 6, 7 and 8 for each of NGROUP groups of the second file	MTAPE

Name or description of data set - XS.ISO2, Problem Dependent Microscopic Group Cross Section

Record structure - ARC System data set

Read in subprograms - None

Written in subprograms	Record types	Reference variable
PCCHI	1, 2, 3 and 4 of the first file	LTAPE
CCS	1, 2, 3 and NGROUP of 4 for the second file	LTAPE
CPCS	5, 6, 7 and 8 for each of NGROUP groups of the second file	MTAPE

---

8. MICCOL (AJC007) Error Messages

There are no error messages for this module.

9. MICCOL (AJC007) Timing Information

For a cross-section set with 20 isotopes and 26 energy groups, collapsing to 8 energy groups requires less than 40 seconds of computer time on the IBM 360 Model 75.

10. MICCOL (AJC007) Sample Output

There is no sample output for this module.

PART FIVE.
MACROSCOPIC CROSS-SECTION COLLAPSE MODULE, MACCOL (AJC008)

Formulated By - J. Hoover
Designed By - J. Hoover
Programmed By - J. Hoover

1. MACCOL (AJC008) Introduction

a. Description of Capabilities

This module collapses macroscopic group cross sections (material level) to any number of user specified groups. Linear flux weighting is used to obtain region dependent cross sections. The cross sections are obtained from the data sets XS.M.MIN and XS.C.MIN. The fluxes are obtained from data set FR.PN. The necessary collapsing data is obtained from A.COL. This module produces region dependent cross sections (data set XS.M.MIN) and a corresponding set of homogenization data (B.HOMOG). The collapsed group cross sections are written on data set XS.M.MIC. Insufficient or inefficient data are not noted with an error message; processing continues until a fatal error occurs.

b. Standard Paths Which Utilize This Module, and Other Modules Utilized by Each Path

	Modules Utilized by Each Path	Standard Paths Which Utilize this Module: STP004 Burnup Diffusion Theory
	INHOMOG (NUI001) Multigroup Cross Section Homogenization Specifications	X
	HOMOG (NUC001) Multigroup Cross Section Homogenization	X
	HHOMOG (NUC007) Material-to-Composition Cross Section Homogenization	X
	GNIP (NUI002) Neutronics Input Processor	X
DARC1D	DIF1D (NUC002) One-dimensional Diffusion Theory k_{eff} and Source Calculations	X
DARC1D	D1DSCH (NUC004) One-dimensional Diffusion Theory Criticality Search	X

b. Standard Paths Which Utilize This Module, and Other Modules Utilized by Each Path (Contd.)

	Modules Utilized by Each Path	Standard Paths Which Utilize This Module: STP004 Burnup Diffusion Theory
DARC2D	DIF2D (NUC005) Two-dimensional Diffusion Theory k_{eff} and Source Calculations	X
DARC2D	D2DSCH (NUC004) Two-dimensional Diffusion Theory Criticality Search	X
REBUS	INFUEL (FCI001) Fuel Cycle Specifications	X
REBUS	FUELCY (FCC001) Fuel Cycle Analysis	X
REBUS	MACCOL (AJC008) Macroscopic Cross Section Collapse	X

c. Data Sets Utilized by This Module

Upper-interface Data Sets	Records Read
A.COL, Collapse Data Input	2 and 4
XS.M.MIN, Macroscopic Material Cross Sections	All
XS.C.MIN, Macroscopic Composition Cross Section	All
B.HOMOG, Binary Version of Homogenization Input	All
FR.PN, Power-Normalized Real Fluxes	All
XS.ISO2, Problem Dependent Microscopic Group Cross Sections	1, 2, 3 and 4 of file 1

Lower-interface Data Sets	Records Read
XS.M.MIC, Macroscopic Material Cross Sections	All
B.HOMOG, Binary Version of Homogenization Input	All

2. MACCOL (AJC008) Description of Problem and Method of Solution

a. Introduction

Few group cross sections must be prepared from multigroup group cross sections. This module produces collapsed material cross sections which are region dependent. The processing includes reading the original macroscopic cross section set, and the collapsing specifications. The collapsed multigroup data are then generated.

b. Method of Solution

Collapsed region dependent cross sections are obtained by linear flux weighting with a specified flux. The equation set is

$$\bar{\Sigma}_x^i(r,J) = \sum_{j \text{ in } J} \Sigma_x^i(j)\phi(j,r) \Big/ \sum_{j \text{ in } J} \phi(j,r) \tag{1}$$

$$\bar{\Sigma}_s^i(r,J\to K) = \sum_{k \text{ in } K} \sum_{j \text{ in } J} \Sigma_s^i(j\to k)\phi(j,r) \Big/ \sum_{j \text{ in } J} \phi(j,r) \tag{2}$$

where

j is the jth group

J is the Jth collapsed group

$\Sigma_x^i(j)$ is the macroscopic material cross section for material i of type x in group j

$\phi(j,r)$ is the flux in group j, region r

$\Sigma_s^i(j\to k)$ is the macroscopic material scattering cross section from group j to k for material i

$\bar{\Sigma}_x^i(r,J)$ is the collapsed macroscopic material cross section of type x for material i in group J and region r

$\bar{\Sigma}_s^i(r,J\to K)$ is the collapsed macroscopic material scattering cross section from group $J\to K$ for material i in region r

The transport cross section is collapsed using Travelli's* Eq. (42).

---

* A. Travelli, Reactor Physics Division Annual Report, July 1, 1967 to June 30, 1968, ANL-7410, p. 413.

3. MACCOL (AJC008) Description of Module Flow

This section describes the overlay structure of this module and the flow of logic through the subprograms.

Section a. consists of an overlay structure diagram, showing the ARC System segments and MACCOL (AJC008) module segments required by this module and their positions in the overlay hierarchy. This is followed by a list of the subroutines located in each MACCOL (AJC007) module segments.

Section b. illustrates the flow of logic through the subprograms of this module, and section c. describes this flow in terms of the modules functions.

a. Overlay Structure Diagram

```
MACCOL
SYSTEM
BPOINTER
LINK
LOAD
IBCOM
```

No overlays

Subprograms in the MACCOL Module

CCHI
CCS
COLLA
DCHI
FRPNC
MAIN
MACCOL
M1
M2
M3
M4
M5
M6
M7
M8
PCCHI

b. Diagrammatic Subprogram Logic Flow

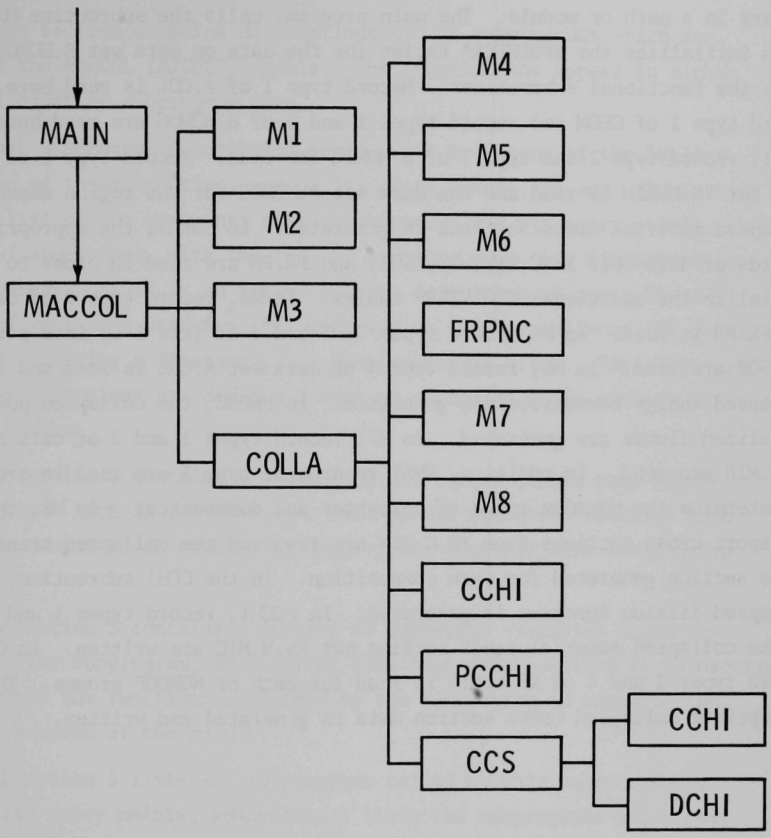

c. Descriptive Subprogram Logic Flow

The MACCOL module is entered when a CALL LINK ('AJC008') statement appears in a path or module. The main program, calls the subroutine MACCOL, which initializes the BPOINTER* tables for the data on data set B.HOMOG and calls the functional subroutines. Record type 1 of A.COL is read here. Record type 1 of GEOM and record types 1 and 3 of B.HOMOG are read here. In M1, record type 2 and type 3 of B.HOMOG are read. Record type 1 of data set XS.M.MIN is read and the data set B.HOMOG for the region dependent collapsed material cross sections is generated. In COLLA, the appropriate records of data sets XS.C.MIN, XS.ISO2, and FR.PN are read in order to initialize the additional BPOINTER* tables. In M4, record type 2 of data set FR.PN is read. In M5 record types 2, 3 and 4 of file 1 of data set XS.ISO2 are read. In M6, record type 4 of data set A.COL is read and the collapsed energy boundaries are generated. In FRPNC, the collapsed power normalized fluxes are generated. In M7, record types 1 and 2 of data set XS.M.MIN are read. In addition, NMAT records of type 3 are read in order to determine the maximum range of upscatter and downscatter. In M8, the transport cross sections from XS.C.MIN are read and the collapsed transport cross section generated for each composition. In the CCHI subroutine, the collapsed fission spectrum is generated. In PCCHI, record types 1 and 2 of the collapsed material cross section set XS.M.MIC are written. In CCS, record types 3 and 4 of XS.M.MIN is read for each of NGROUP groups. The appropriate collapsed cross section data is generated and written.

4. MACCOL (AJC008) Subprogram Descriptions

This section contains descriptions of all subprograms which are part of the MACCOL (AJC007) module. The descriptions appear in alphabetical order by subprogram name.

Each subprogram description begins with a listing of the calling sequence of the subroutine, and of its entry points, if any. Subsection 1 is a list of the arguments of the subroutine and its entry points, in order of appearance, with the type of each argument, its dimensions in the subprogram if it is an array, and its definition or use. The two types of variables used are I*4, denoting an integer fullword (32 bits); and R*8, denoting a floating-point doubleword (64 bits). Variables used as array dimensions are defined either as arguments or as members of common blocks.

Subsection 2 contains the names of all common blocks used by the subprogram. Each is followed by a list of the variables actually used from the common block within the subprogram, together with their definitions.

Subsection 3 contains a listing of important variables which are local to the subprogram, in a format like that of subsection 1. Subsection 4 describes the functions performed by the subprogram in terms of the overall purpose of the module.

Subsection 5 lists all subprograms called by this subprogram or any of its entry points; subsection 6 lists the subprograms which call this subprogram or any of its entry points.

More detailed explanations of the contents of common blocks, and of the variable-dimensioned arrays stored in the large container array /A/, can be obtained in sections 5 and 6.

Subroutine CCHI (CHI, CHIC, E, EC, NGROUP)

1. Arguments

Name	Type	Dimension	Definition
CHI	R*8	NGROUP*NGROUP	Fission fraction from XS.M.MIN
CHIC	R*8	NGROUP*NGROUP	Collapsed fission fraction
E	R*8	NGROUP + 1	Energy boundaries of groups from XS.I.SO2
EC	R*8	NCGROU + 1	Collapsed energy boundaries
NGROUP	I*4	--	Number of groups

2. Common Blocks

/CLC/

Variables used from this common block

Name	Type	Definition
ICHIC	I*4	Fission spectrum flag for the collapsed cross section data

/LT/

Variables used from this common block

Name	Type	Definition
ICHI	I*4	Fission spectrum flag

3. Local Variables - None

4. Functions and tasks performed by this subroutine

This subroutine generates the collapsed fission fraction spectrum.

5. Subprograms called by this subroutine

DUMP (ARC System subprogram)

6. Subprograms calling this subroutine

CCS

7. Error messages generated by this subroutine - None

Subroutine CCS (STR, SCAP, SNALF, SNP, ANISO, SFIS, FISNU, CHI, CHIC, E, EC, FP, FPC, CSTR, CSCAP, CSNALF, CSNP, CANISO, CSFIS, CFISNU, LINUP, LINDN, SINL, CSINL, KI, KIP, DNCHI, DNCHIC, LOCM, XTR, CXTR, NCMP, LTAPE, N, M, ML, MAT)

1. Arguments

Name	Type	Dimension	Definition
STR	R*8	NGROUP	Transport cross section from XS.M.MIN
SCAP	R*8	NGROUP	Absorption cross section from data set XS.M.MIN
SNALF	R*8	NGROUP	Removal cross section from data set XS.M.MIN
SNP	R*8	NGROUP	Total cross section from data set XS.M.MIN
ANISO	R*8	NGROUP	Prompt fission reaction from data set XS.M.MIN
SFIS	R*8	NGROUP	Fission reaction rate from data set XS.M.MIN
FISNU	R*8	NGROUP	Fission reaction rate from data set XS.M.MIN
CHI	R*8	NGROUP*NGROUP	Fission fraction from data set XS.I.SO2 and XS.M.MIN
CHIC	R*8	NGROUP*NGROUP	Collapsed fission fraction
E	R*8	NGROUP + 1	Energy boundaries of groups from record type 3 of file 1 of data set XS.ISO2

Name	Type	Dimension	Definition
EC	R*8	NCGROU + 1	The collapsed neutron energy boundaries
FP	R*8	NGROUP*NREG	The power-normalized fluxes from data set FR.PN
FPC	R*8	NGROUP*NREG	The collapsed power-normalized power
CSTR	R*8	NCGROU	Collapsed transport cross section
CSCAP	R*8	NCGROU	Collapsed absorption cross section
CSNALF	R*8	NCGROU	Collapsed removal cross section
CSNP	R*8	NCGROU	Collapsed total cross section
CANISO	R*8	NCGROU	Collapsed fission reaction rate
CSFIS	R*8	NCGROU	Collapsed fission cross section
CSFISNU	R*8	NCGROU	Collapsed fission reaction rate
LINUP	I*4	NGROUP	Number of groups of upscatter
LINDN	I*4	NGROUP	Number of groups of downscatter
SINL	R*8	NGROUP*NGROUP	Scattering cross section from data set XS.M.MIN
CSINL	R*8	NCGROU*NCGROU	Collapsed scattering cross section
KI	I*4	NCGROU*6	The number of groups of upscatter and downscatter for the collapsed group structure
LIP	I*4	NGROUP*6	The number of groups of upscatter and downscatter
DNCHI	R*8	NGROUP*NFAM	Delayed neutron fission fraction spectrum from data set XS.M.MIN
DNCHIC	R*8	NGROUP*NFAM	The collapsed delayed neutron fission fraction spectrum
LOCM	I*4	NMAT*NREG	Location in the mix table (CDMMIX) of each material for each region in which it is present
XTR	R*8	NCMP*NGROUP	Transport cross section from record type 4 of data set XS.C.MIN

Name	Type	Dimension	Definition
CSTR	R*8	NCMP*NGROUP	The collapsed transport cross section for each composition
NCMP	I*4	--	Number of compositions
LTAPE	I*4	--	Data set reference number for XS.M.MIN
N	I*4	--	Number of groups
M	I*4	--	Number of collapsed groups
ML	I*4	--	Material number being processed
MAT	I*4	--	Number of materials

2. Common Blocks

/A/

Variables used from this common block

Name	Type	Definition
A(1)	R*8	BPOINTER container array

/CLC/

Variables used from this common block

Name	Type	Definition
ICHIC	I*4	Fission spectrum flag for the collapsed cross section data

/FLC/

Variables used from this common block

Name	Type	Definition
NREG	I*4	Number of regions

/IG/

Variables used from this common block

Name	Type	Definition
I20	I*4	Pointer to array CHI
I21	I*4	Pointer to array CHIC
I11	I*4	Pointer to array E
I6	I*4	Pointer to array EC
I43	I*4	Pointer to array DNCHI
I44	I*4	Pointer to array DNCHIC

/LT/

Variables used from this common block

Name	Type	Definition
NGROUP	I*4	Number of neutron energy groups
ICHI	I*4	Fission spectrum flag
NFAM	I*4	Number of families of delayed neutrons from record type 1 of XS.M.MIN

3. Local Variables - None

4. Functions and tasks performed by this subroutine

This subroutine reads record type 3 and record type 4 of data set XS.M.MIN. The appropriate collapsed cross section data is then generated and written.

5. Subprograms called by this subroutine

CCHI
DCHI
DUMP (ARC System subprogram)
CLEAR (ARC System subprogram)

6. Subprograms calling this subroutine

COLLA

7. Error messages generated by this subroutine - None

Subroutine COLLA (LOCM, CDMTBL, REG, NC, N, LTAPE)

1. Arguments

Name	Type	Dimension	Definition
LOCM	I*4	NMAT*NREG	Location in the mix table (CDMMIX) of each material for each region in which it is present
CDMTBL	R*8	NMAT*NREG	For the collapsed cross section set, the labels of the materials (used in record type 2 of B.HOMOG)
REG	R*8	NREG	Region labels from record type 9 of GEOM
NC	I*4	NREG	Composition index from record type 5 of GEOM
N	I*4	--	Number of materials
LTAPE	I*4	--	Data set reference number for XS.M.MIN

2. Common Blocks

/A/

Variables used from this common block

Name	Type	Definition
A(1)	R*8	BPOINTER container array

/CLC/

Variables used from this common block

Name	Type	Definition
NISO	I*4	Number of isotopes from record type 1 of XS.ISO2

/FLC/

Variables used from this common block

Name	Type	Definition
EVALUE	I*4	Eigenvalue from record type 1 of FR.PN
NREG	I*4	Number of regions
KIND	I*4	Kind of flux from record type 1 of FR.PN
ITER	I*4	Iteration number from record type 1 of FR.PN
I20	I*4	Pointer to array CHI
I21	I*4	Pointer to array CHIC
I11	I*4	Pointer to array E
I43	I*4	Pointer to array DNCHI
I44	I*4	Pointer to array DNCHIC

/LT/

Variables used from this common block

Name	Type	Definition
NMAT	I*4	Number of materials
NGROUP	I*4	Number of neutron energy groups
NFAM	I*4	Number of families of delayed neutrons from record type 1 of XS.M.MIN

3. Local Variables - None

4. Functions and tasks performed by this subroutine

This subroutine initializes the BPOINTER tables for the cross section data. Record type 1 of data set FR.PN and record type 2 of A.COL are read. The functional subroutines for collapsing are also called.

5. Subprograms called by this subroutine

SNIFF (ARC System subprogram)
PUTPNT (Entry in BPOINTER)
GETPNT (Entry in BPOINTER)
CLEAR (ARC System subprogram)
M4
M5
M6
FRPNC
M7
M8
CCHI
PCCHI
CCS

6. Subprograms calling this subroutine - None

7. Error messages generated by this subroutine - None

Subroutine DCHI (DNCHI, DNCHIC, E, EC, N)

1. Arguments

Name	Type	Dimension	Definition
DNCHI	R*8	NGROUP*NFAM	Delayed neutron fission fraction spectrum from XS.M.MIN
DNCHIC	R*8	NGROUP*NFAM	Collapsed delayed neutron fission fraction spectrum
E	R*8	NGROUP + 1	Energy boundaries from XS.ISO2
EC	R*8	NCGROU + 1	Collapsed energy boundaries
N	I*4	--	Number of delayed neutron families

2. Common Blocks

/LT/

Variables used from this common block

Name	Type	Definition
NGROUP	I*4	Number of neutron energy groups
NFAM	I*4	Number of families of delayed neutrons from record type 1 of XS.M.MIN

3. Local Variables - None

4. Functions and tasks performed by this subroutine

This subroutine generates the collapsed delayed neutron fission fraction spectrum.

5. Subprograms called by this subroutine

DUMP (ARC System subprogram)

6. Subprograms calling this subroutine

CCS

7. Error messages generated by this subroutine - None

Subroutine FRPNC (FP, FPC, E, EC, NGROUP, NCGROU)

1. Arguments

Name	Type	Dimension	Definition
FP	R*8	NGROUP*NREG	Power-normalized fluxes from data set FR.PN
FPC	R*8	NCGROU*NREG	Collapsed power-normalized flux

Name	Type	Dimension	Definition
E	R*8	NGROUP + 1	Energy group boundaries
EC	R*8	NCGROU + 1	Collapsed energy group structure
NGROUP	I*4	--	Number of neutron group structure
NCGROU	I*4	--	Number of collapsed neutron energy groups

2. Common Blocks

/FLC/

Variables used from this common block

Name	Type	Definition
NREG	I*4	Number of regions

3. Local Variables - None

4. Functions and tasks performed by this subroutine

This subroutine generates the collapsed region dependent, power-normalized fluxes.

5. Subprograms called by this subroutine - None

6. Subprograms calling this subroutine

COLLA

7. Error messages generated by this subroutine - None

Main Program MAIN

1. Arguments - None

2. Common Blocks - None

3. Local Variables - None

4. Functions and tasks performed by this program

   This program calls the subroutine MACCOL.

5. Subprograms called by this program - None

6. Subprograms calling this program - None

7. Error messages generated by this program - None

Subroutine MACCOL

1. Arguments - None

2. Common Blocks

   /A/

Variables used from this common block

Name	Type	Definition
A(1)	R*8	BPOINTER container array

/PAR/

Variables used from this common block

Name	Type	Definition
MCSLTH	I*4	Length of composition mixture table in record type 4 of B.HOMOG
NCMP	I*4	Number of compositions in record type 4 of B.HOMOG
NMAT	I*4	Number of materials in B.HOMOG
MSLTH	I*4	Length of material mixture table in record type 2 of B.HOMOG
NISO2	I*4	Number of isotopes in list in record type 2 of B.HOMOG
LAREA	I*4	Length of record type 6 in GEOM
LZONE	I*4	Length of record type 7 in GEOM
NIL	I*4	Number of finite directions from record type 1 of GEOM

/TAP/

Variables used from this common block

Name	Type	Definition
ITAPE	I*4	Data set reference number for B.HOMOG
JTAPE	I*4	Data set reference number for GEOM

3. Local Variables - None

4. Functions and tasks performed by this subroutine

This subroutine initializes the POINTR* tables for the data set B.HOMOG. In addition, the subroutine (COLLA), which initializes the POINTR* tables for the cross section data, is called.

---

*ARC System subprogram package.

5. Subprograms called by this subroutine

POINTR (ARC System subprogram)
PUTPNT (Entry in BPOINTER)
GETPNT (Entry in BPOINTER)
BULK (Entry in BPOINTER)
FREE (Entry in BPOINTER)
SNIFF (ARC System subprogram)
M1
M2
M3
COLLA

6. Subprograms calling this subroutine

MAIN

7. Error messages generated by this subroutine - None

Subroutine M1 (DIMIX, ATMDEN, MSPEC, DITBL, DMTB1)

1. Arguments

Name	Type	Dimension	Definition
DIMIX	R*8	MSLTH	Mixture table from record type 2 of B.HOMOG
ATMDEN	R*8	MSLTH	Atomic density table from record type 2 of B.HOMOG
MSPEC	I*4	NMAT	Number of isotopes comprising each material from record type 2 of B.HOMOG
DITBL	R*8	NISO2	List of isotopes from record type 2 of B.HOMOG
DMTB1	R*8	NMAT	Labels of materials from record type 2 of B.HOMOG

2. Common Blocks

/PAR/

Variables used from this common block

Name	Type	Definition
MCSLTH	I*4	Length of composition mixture table in record type 4 of B.HOMOG
NCMP	I*4	Number of compositions in record type 4 of B.HOMOG
NMAT	I*4	Number of materials in B.HOMOG
MSLTH	I*4	Length of material mixture table in record type 2 of B.HOMOG
NISO2	I*4	Number of isotopes in list in record type 2 of B.HOMOG

/TAP/

Variables used from this common block

Name	Type	Definition
ITAPE	I*4	Data set reference number for B.HOMOG

3. Local Variables - None

4. Functions and tasks performed by this subroutine

This subroutine reads record type 2 and record type 3 of B.HOMOG.

5. Subprograms called by this subroutine

DUMP (ARC System subprogram)

6. Subprograms calling this subroutine

MACCOL

7. Error messages generated by this subroutine - None

Subroutine M2 (DMMIX, VOLFRC, MCSPEC, DMTB2, DCTBL)

1. Arguments

Name	Type	Dimension	Definition
DMMIX	R*8	MCSLTH	Mixture table from record type 4 of B.HOMOG
VOLFRC	R*8	MCSLTH	Volume fraction table from record type 4 of B.HOMOG
MCSPEC	I*4	NCMP	Number of materials comprising each material from record type 4 of B.HOMOG
DMTB2	R*8	NMAT	List of materials from record type 4 of B.HOMOG
DCTBL	R*8	NCMP	Labels of compositions from record type 4 of B.HOMOG

2. Common Blocks

/PAR/

Variables used from this common block

Name	Type	Definition
MCSLTH	I*4	Length of composition mixture table in record type 4 of B.HOMOG
NCMP	I*4	Number of compositions in record type 4 of B.HOMOG
NMAT	I*4	Number of materials in B.HOMOG

/TAP/

Variables used from this common block

Name	Type	Definition
ITAPE	I*4	Data set reference number for B.HOMOG

3. Local Variables - None

4. Functions and tasks performed by this subroutine

This subroutine reads record type 4 of B.HOMOG.

5. Subprograms called by this subroutine

DUMP (ARC System subprogram)

6. Subprograms calling this subroutine

MACCOL

7. Error messages generated by this subroutine - None

Subroutine M3 (DIMIX, ATMDEN, MSPEC, DITBL, DMTB1, DMMIX, VOLFRC, MCSPEC, DCTBL, CDCTBL, CDMMIX, CVOLFR, CMCSPE, CMSPEC, CATMDE, CDIMIX, CDMTBL, LOCM, CMNAME, REG, NC, CNAME, DMTB2, NREG, MAT, LTAPE)

1. Arguments

Name	Type	Dimension	Definition
DIMIX	R*8	MSLTH	Mixture table from record type 2 of B.HOMOG
ATMDEN	R*8	MSLTH	Atomic density table from record type 2 of B.HOMOG
MSPEC	I*4	NMAT	Number of isotopes comprising each material from record type 2 of B.HOMOG
DITBL	R*8	NISO2	List of isotopes from record type 2 of B.HOMOG
DMTB1	R*8	NMAT	Labels of materials from record type 2 of B.HOMOG
DMMIX	R*8	MCSLTH	Mixture table from record type 4 of B.HOMOG
VOLFRC	R*8	MCSLTH	Volume fraction table from record type 4 of B.HOMOG

Name	Type	Dimension	Definition
MCSPEC	I*4	NCMP	Number of materials comprising each material from record type 4 of B.HOMOG
DCTBL	R*8	NCMP	Labels of compositions from record type 4 of B.HOMOG
CDCTBL	R*8	NREG	For the collapsed cross section set, the composition labels (used in record type 4 of B.HOMOG)
CDMMIX	R*8	NREG*MCSLTH	For the collapsed cross section set, the mix table (used in record type 4 of B.HOMOG)
CVOLFR	R*8	NREG*MCSLTH	For the collapsed cross section set, the volume fraction table (used in record type 4 of B.HOMOG)
CMCSPE	I*4	NREG	For the collapsed cross section set, the number of materials comprising each composition (used in record type 4 of B.HOMOG)
CMSPEC	I*4	NMAT*NREG	For the collapsed cross section set, the number of isotopes comprising each material (used in record type 2 of B.HOMOG)
CATMDE	R*8	NREG*MSLTH	For the collapsed cross section set, the atomic density table (used in record type 2 of B.HOMOG)
CDIMIX	R*8	NREG*MSLTH	For the collapsed cross section set, the mix table (used in record type 2 of B.HOMOG)
CDMTBL	R*8	NMAT*NREG	For the collapsed cross section set, the labels of materials (used in record type 2 of B.HOMOG)
LOCM	I*4	NMAT*NREG	Location in the mix table (CDMMIX) of each material for each region in which it is present
CMNAME	R*8	NMAT	Material labels from record type 1 of XS.M.MIN
REG	R*8	NREG	Region labels from record type 9 of GEOM

Name	Type	Dimension	Definition
NC	I*4	NREG	Composition index from record type 5 of GEOM
CNAME	R*8	NMAT	Composition labels
DMTB2	R*8	NMAT	List of materials from record type 4 of B.HOMOG
NREG	I*4	--	Number of regions
MAT	I*4	--	Number of materials
LTAPE	I*4	--	Data set reference number for XS.M.MIN

2. Common Blocks

/PAR/

Variables used from this common block

Name	Type	Definition
NCMP	I*4	Number of compositions in record type 4 of B.HOMOG
NMAT	I*4	Number of materials in B.HOMOG
NISO2	I*4	Number of isotopes in list in record type 2 of B.HOMOG
LAREA	I*4	Length of record type 6 in GEOM
LZONE	I*4	Length of record type 7 in GEOM
NIL	I*4	Number of finite directions from record type 1 of GEOM

/TAP/

Variables used from this common block

Name	Type	Definition
JTAPE	I*4	Data set reference number for GEOM

3. Local Variables

Name	Type	Definition
KTAPE	I*4	B.HOMOG data set reference number

4. Functions and tasks performed by this subroutine

This subroutine generates the data set B.HOMOG for the collapsed cross section set. In addition the material labels from record type 1 of XS.M.MIN are read. The composition labels and region labels from data set GEOM (record type 9) are read. The composition-region correspondence (record type 5) of data set GEOM is also read.

5. Subprograms called by this subroutine

SNIFF (ARC System subprogram)

6. Subprograms calling this subroutine

MACCOL

7. Error messages generated by this subroutine - None

Subroutine M4 (FP, NTAPE, NGROUP)

1. Arguments

Name	Type	Dimension	Definition
FP	R*8	NGROUP*NREG	Power-normalized real flux from FR.PN
NTAPE	I*4	--	Data set reference number for FR.PN
NGROUP	I*4	--	Number of groups

2. Common Blocks

/FLC/

Variables used from this common block

Name	Type	Definition
NREG	I*4	Number of regions

3. Local Variables - None

4. Functions and tasks performed by this subroutine

This subroutine reads record type 2 of FR.PN.

5. Subprograms called by this subroutine - None

6. Subprograms calling this subroutine

COLLA

7. Error messages generated by this subroutine - None

Subroutine M5 (ISONME, LOCA, E, U, VEL, CHI, MTAPE, NGROUP, NCGROU)

1. Arguments

Name	Type	Dimension	Definition
ISONME	R*8	NISO	Isotope name list from XS.ISO2
LOCA	I*4	NISO	Number of records in the second file of XS.ISO2 to be skipped to read the data for each isotope
E	R*8	NGROUP + 1	Energy boundaries of groups from XS.ISO2
U	R*8	NGROUP + 1	Lethargy boundaries of groups from XS.ISO2

Name	Type	Dimension	Definition
VEL	R*8	NGROUP	Velocities from XS.ISO2
CHI	R*8	NGROUP*NGROUP	Fission fraction data
MTAPE	I*4	--	Data set reference number for XS.ISO2
NGROUP	I*4	--	Number of groups
NCGROU	I*4	--	Number of collapsed groups

2. Common Blocks

/CLC/

Variables used from this common block

Name	Type	Definition
NISO	I*4	Number of isotopes from record type 1 of XS.ISO2

3. Local Variables - None

4. Functions and tasks performed by this subroutine

This subroutine reads record types 2, 3 and 4 of file 1 of data set XS.ISO2.

5. Subprograms called by this subroutine

DUMP (ARC System subprogram)
DUMP (ARC System subprogram)

6. Subprograms calling this subroutine

COLLA

7. Error messages generated by this subroutine - None

Subroutine M6 (EC, KE, E, ITAPE, NCGROU)

1. Arguments

Name	Type	Dimension	Definition
EC	R*8	NCGROU + 1	Collapsed energy group boundaries
KE	I*4	NCGROU + 1	The group correspondence factors from record type 4 of A.COL
E	R*8	NGROUP	Energy group boundaries
ITAPE	I*4	--	Data set reference number for FR.PN
NCGROU	I*4	--	Number of collapsed energy groups

2. Common Blocks - None

3. Local Variables - None

4. Functions and tasks performed by this subroutine

This subroutine reads the group correspondence factors from record type 4 of A.COL and generates the collapsed neutron energy boundaries.

5. Subprograms called by this subroutine - None

6. Subprograms calling this subroutine

COLLA

7. Error messages generated by this subroutine - None

Subroutine M7 (CMNAME, CHI, LINUP, LINDN, KI, LIP, CCMAME, LOCM, E, EC, CDMTBL, REG, MA, LTAPE, NGROUP, NCGROUP)

1. Arguments

Name	Type	Dimension	Definition
CMNAME	R*8	NMAT	Material labels from record type 1 of XS.M.MIN
CHI	R*8	NGROUP*NGROUP	Fission fraction spectrum
LINUP	I*4	NGROUP	Number of groups of upscatter
LINDN	I*4	NGROUP	Number of groups of downscatter
KI	I*4	NCGROU*6	The number of groups of upscatter and downscatter for the collapsed group structure
LIP	I*4	NGROUP*6	The number of groups of upscatter and downscatter
CCMAME	R*8	NMAT*NREG	Material labels for the collapsed cross section set
LOCM	I*4	NMAT*NREG	Location in the mix table (CDMMIX) of each material for each region in which it is present
E	R*8	NGROUP + 1	Energy boundaries of groups from record type 3 of file of XS.ISO2
EC	R*8	NCGROU + 1	Collapsed neutron energy boundaries
CDMTBL	R*8	NMAT*NREG	For the collapsed cross section set the labels of materials (used in record type 2 of B.HOMOG)
REG	R*8	NREG	Region labels
MA	I*4	--	Number of materials
LTAPE	I*4	--	Data set reference number for XS.M.MIN
NGROUP	I*4	--	Number of groups
NCGROU	I*4	--	Number of collapsed groups

2. Common Blocks

/LT/

Variables used from this common block

Name	Type	Definition
NMAT	I*4	Number of materials
NGROUP	I*4	Number of neutron energy groups
ICHI	I*4	Fission spectrum flag
NFCMP	I*4	Number of fissionable materials from record type 1 of XS.M.MIN
NFAM	I*4	Number of families of delayed neutrons from record type 1 of XS.M.MIN
MAXUP	I*4	Maximum number of groups of upscatter from records type 1 of XS.M.MIN
LC	I*4	Number of materials in the collapsed cross section data
MAXUPC	I*4	Maximum number of groups of upscatter for the collapsed cross section data
MAXDNC	I*4	Maximum number of groups of downscatter for the collapsed cross section data

/FLC/

Variables used from this common block

Name	Type	Definition
NREG	I*4	Number of regions

3. Local Variables - None

4. Functions and tasks performed by this subroutine

This subroutine reads record types 1, 2, 3 of data set XS.M.MIN. The maximum range of upscattering and downscattering for the collapsed energy boundaries is calculated in this subroutine.

5. Subprograms called by this subroutine

DUMP (ARC System subprogram)

6. Subprograms calling this subroutine

COLLA

7. Error messages generated by this subroutine - None

Subroutine M8 (FP, FPC, XTR, CSTR, CNAME, NC, E, EC, NCMP, KCTAP, NGROUP, NCGROU)

1. Arguments

Name	Type	Dimension	Definition
FP	R*8	NGROUP*NREG	Power-normalized fluxes from data set FR.PN
FPC	R*8	NCGROU*NREG	Collapsed power-normalized fluxes
XTR	R*8	NCMP*NGROUP	Transport cross section from record type 4 of data set XS.C.MIN
CXTR	R*8	NCMP*NCROU	The collapsed transport cross section
CNAME	R*8	NCMP	Composition labels
NC	I*4	NREG	Composition index from record type 5 of GEOM
E	R*8	NGROUP + 1	Energy boundaries of groups from record type 3 of file 1 of XS.ISO2
EC	R*8	NCGROU + 1	The collapsed neutron energy boundaries
NCMP	I*4	--	Number of compositions
KCTAP	I*4	--	Data set reference number for XS.C.MIN
NGROUP	I*4	--	Number of groups
NCGROU	I*4	--	Number of collapsed groups

2. Common Blocks

/FLC/

Variables used from this common block

Name	Type	Definition
NREG	I*4	Number of regions

3. Local Variables - None

4. Functions and tasks performed by this subroutine

This subroutine reads the transport cross section for each composition and collapses it. This collapsed transport cross section is used to generate the collapsed transport cross section for each material.

5. Subprograms called by this subroutine

CUMP (ARC System subprogram)

6. Subprograms calling this subroutine

COLLA

7. Error messages generated by this subroutine - None

Subroutine PCCHI (EC, CCMAME, CHIC, NGROUP, NCGROU)

1. Arguments

Name	Type	Dimension	Definition
EC	R*8	NCGROU + 1	Collapsed energy boundaries
CCMAME	R*8	NMAT*NREG	Material labels for the collapsed cross section set
CHIC	R*8	NGROUP*NGROUP	Collapsed fission fractions

Name	Type	Dimension	Definition
NGROUP	I*4	--	Number of groups
NCGROU	I*4	--	Number of collapsed groups

2. Common Blocks

/CLC/

Variables used from this common block

Name	Type	Definition
ICHIC	I*4	Fission spectrum flag for the collapsed cross section data

/LT/

Variables used from this common block

Name	Type	Definition
NFCMP	I*4	Number of fissionable materials from record type 1 of XS.M.MIN
NFAM	I*4	Number of families of delayed neutrons from record type 1 of XS.M.MIN
LC	I*4	Number of materials in the collapsed cross section data
MAXUPC	I*4	Maximum number of groups of upscatter for the collapsed cross section data
MAXDNC	I*4	Maximum number of groups of downscatter for the collapsed cross section data

/TAPEN/

Variables used from this common block

Name	Type	Definition
LLAPE	I*4	Data set reference number for the collapsed cross section data XS.M.MIC

3. Local Variables - None

4. Functions and tasks performed by this subroutine

This subroutine writes the collapsed fission fractions.

5. Subprograms called by this subroutine

SNIFF (ARC System subprogram)

6. Subprograms calling this subroutine

COLLA

7. Error messages generated by this subroutine - None

5. MACCOL (AJC008) Common Block Descriptions

This section provides more detailed information about the common blocks used by MACCOL (AJC008) subroutines. The common blocks appear in alphabetical order by name.

For each common block, all variables are listed in order of appearance in the block by name and type, and the definition of each is given. In addition, there appears for each variable a list of the subprograms in which the value of the variable is set or altered.

A special case is the /A/ common block, which contains the container array A used by the dynamic storage allocation module BPOINTER (see ANL-7711 of this series). Section 6 contains a list of the names of all arrays which may be defined in the container array at any point in the execution of the module.

/A/

Name	Type	Subprograms where values are set or modified	Definition
A(1)	R*8	CCHI,CCS,COLLA, CHI,FRPNC,MACCOL, M1,M2,M3,M4,M5, M6,M7,M8,PCCHI	BPOINTER container array

/CLC/

Name	Type	Subprograms where values are set or modified	Definition
NISO	I*4	COLLA	Number of isotopes from record type 1 of XS.ISO2
ICHIC	I*4	CCHI	Fission spectrum flag for the collapsed cross section data

/FLC/

Name	Type	Subprograms where values are set or modified	Definition
EVALUE	I*4	COLLA	Eigenvalue from record type 1 of FR.PN
NREG	I*4	MACCOL,COLLA	Number of regions
KIND	I*4	COLLA	Kind of flux from record type 1 for FR.PN
ITER	I*4	COLLA	Iteration number from record type 1 of FR.PN

/IG/

Name	Type	Subprograms where values are set or modified	Definition
I20	I*4	COLLA	Pointer to array CHI
I21	I*4	COLLA	Pointer to array CHIC
I11	I*4	COLLA	Pointer to array E
I6	I*4	COLLA	Pointer to array EC
I43	I*4	COLLA	Pointer to array CNCHI
I44	I*4	COLLA	Pointer to array DNCHIC

/LT/

Name	Type	Subprograms where values are set or modified	Definition
NMAT	I*4	COLLA	Number of materials
NGROUP	I*4	COLLA	Number of neutron energy groups
ICHI	I*4	CCS,M7	Fission spectrum flag
NFCMP	I*4	M7	Number of fissionable materials from record type 1 of XS.M.MIN
NFAM	I*4	M7	Number of families of delayed neutrons from record type 1 of XS.M.MIN
MAXUP	I*4	M7	Maximum number of groups of upscatter from record type 1 of XS.M.MIN
MAXDN	I*4	M7	Maximum number of groups of downscatter from record type 1 of XS.M.MIN
LC	I*4	M7	Number of materials in the collapsed cross section data

Name	Type	Subprograms where values are set or modified	Definition
MAXUPC	I*4	M7	Maximum number of groups of upscatter for the collapsed cross section data
MAXDNC	I*4	M7	Maximum number of groups of downscatter for the collapsed cross section data

/PAR/

Name	Type	Subprograms where values are set or modified	Definition
MCSLTH	I*4	MACCOL,M1	Length of composition mixture table in record type 4 of B.HOMOG
NCMP	I*4	MACCOL,M1	Number of compositions in record type 4 of B.HOMOG
NMAT	I*4	MACCOL,M1	Number of materials in B.HOMOG
MSLTH	I*4	MACCOL	Length of material mixture table in record type 2 of B.HOMOG
NISO2	I*4	MACCOL	Number of isotopes in list in record type 2 of B.HOMOG
LAREA	I*4	MACCOL	Length of record type 6 in GEOM
LZONE	I*4	MACCOL	Length of record type 7 in GEOM
NIL	I*4	MACCOL	Number of finite directions from record type 1 of GEOM

/TAP/

Name	Type	Subprograms where values are set or modified	Definition
ITAPE	I*4	MACCOL	Data set reference number for B.HOMOG
JTAPE	I*4	MACCOL	Data set reference number for GEOM

/TAPEN/

Name	Type	Subprograms where values are set or modified	Definition
LLAPE	I*4	PCCHI	Data set reference number for the collapsed cross section data set XS.M.MIC

6. MACCOL (AJC008) Dynamic Storage Array Allocation

This section describes all arrays which may be defined by this module in common block /A/ using the facilities of the dynamic storage allocation module BPOINTER (see ANL-7711 of this series). The arrays are listed in alphabetical order by the name given them in the BPOINTER name table. For each array, the following information is given:

1. type;
2. dimension, in terms of module variables;
3. names of subprograms where action is taken that affects the status of the array in the container, followed in parentheses by the action that is taken in the subprogram (here, significant BPOINTER calls are to PUTPNT, which allocates space in the container for the array);
4. the definition of the array contents.

If the meaning of a variable used as the dimension of an array is not known, it can be found in the subprogram in which a call to PUTPNT is made for that array.

Array Name	Type	Dimension	Subprograms issuing significant BPOINTER calls	Subprograms where values are set or modified	Definition
ANISO	R*8	NGROUP	COLLA(PUTPNT)	CCS	Prompt fission reaction rate from data set XS.M.MIN
ATMDEN	R*8	MSLTH	MACCOL(PUTPNT)	M1	Atomic density table from record type 2 of B.HOMOG
CANISO	R*8	NCGROU	COLLA(PUTPNT)	CCS	Collapsed fission reaction rate
CATMDE	R*8	NREG*MSLTH	MACCOL(PUTPNT)	M3	For the collapsed cross section set, the atomic density table (used in record type 2 of B.HOMOG)
CCMAME	R*8	NMAT*REG	COLLA(PUTPNT)	M7	Material labels for the collapsed cross section set
CDCTBL	R*8	NREG	MACCOL(PUTPNT)	M3	For the collapsed cross section set, the composition labels (used in record type 4 of B.HOMOG)
CDIMIX	R*8	NREG*MCSLTH	MACCOL(PUTPNT)	M3	For the collapsed cross section set, the mix table (used in record type 2 of B.HOMOG)
CDMMIX	R*8	NREG*MCSLTH	MACCOL(PUTPNT)	M3	For the collapsed cross section set, the mix table (used in record type 4 of B.HOMOG)
CDMTBL	R*8	NMAT*NREG	MACCOL(PUTPNT)	M3	For the collapsed cross section set, the labels of materials (used in record type 2 of B.HOMOG)
CHI	R*8	NGROUP* NGROUP	COLLA(PUTPNT)	CCS,M5	Fission fraction from data set XS.ISO2 and XS.M.MIN

Array Name	Type	Dimension	Subprograms issuing significant BPOINTER calls	Subprograms where values are set or modified	Definition
CHIC	R*8	NGROUP* NGROUP	COLLA(PUTPNT)	CCHI	Collapsed fission fraction
CMCSPE	I*4	NREG	MACCOL(PUTPNT)	M3	For the collapsed cross section set, the number of materials comprising each composition (used in record type 4 of B.HOMOG)
CMNAME	R*8	NMAT	COLLA(PUTPNT)	M7	Material labels from record type 1 of XS.M.MIN
CMNANE	R*8	NMAT	MACCOL(PUTPNT)	M3	Material labels from record type 1 of XS.M.MIN
CMSPEC	I*4	NMAT*NREG	MACCOL(PUTPNT)	M3	For the collapsed cross section set, the number of isotopes comprising each material (used in record type 2 of B.HOMOG)
CNAME	R*8	NCMP	MACCOL(PUTPNT)	M3,M8	Composition labels
CSCAP	R*8	NCGROU	COLLA(PUTPNT)	CCS	Collapsed absorption cross section
CSFIS	R*8	NCGROU	COLLA(PUTPNT)	CCS	Collapsed fission cross section
CSFISNU	R*8	NCGROU	COLLA(PUTPNT)	CCS	Collapsed fission reaction rate
CSINL	R*8	NCGROU* NCGROU	COLLA(PUTPNT)	CCS	Collapsed scattering cross section
CSNALF	R*8	NCGROU	COLLA(PUTPNT)	CCS	Collapsed removal cross section

Array Name	Type	Dimension	Subprograms issuing significant BPOINTER calls	Subprograms where values are set or modified	Definition
CSNP	R*8	NCGROU	COLLA(PUTPNT)	CCS	Collapsed total cross section
CSTR	R*8	NCGROU	COLLA(PUTPNT)	CCS	Collapsed transport cross section
CVOLFR	R*8	NREG* MCSLTH	MACCOL(PUTPNT)	M3	For the collapsed cross section set, the volume fraction table (used in record type 4 of B.HOMOG)
CXTR	R*8	NCMP* NCGROU	COLLA(PUTPNT)	M8	The collapsed transport cross section for each composition
DCTBL	R*8	NCMP	MACCOL(PUTPNT)	M2	Labels of compositions from recrod type 4 of B.HOMOG
DIMIX	R*8	MSLTH	MACCOL(PUTPNT)	M1	Mixture table from record type 2 of B.HOMOG
DITBL	R*8	NISO2	MACCOL(PUTPNT)	M1	List of isotopes from record type 2 of B.HOMOG
DMMIX	R*8	MCSLTH	MACCOL(PUTPNT)	M2	Mixture table from record type 4 of B.HOMOG
DMTB1	R*8	NMAT	MACCOL(PUTPNT)	M1	Labels of materials from record type 2 of B.HOMOG
DMTB2	R*8	NMAT	MACCOL(PUTPNT)	M2	List of materials from record type 4 of B.HOMOG
DNCHI	R*8	NGROUP* NFAM	COLLA(PUTPNT)	CCS	Delayed neutron fission fraction spectrum from data set XS.M.MIN
DNCHIC	R*8	NGROUP* NFAM	COLLA(PUTPNT)	DCHI	The collapsed delayed neutron fission fraction spectrum

Array Name	Type	Dimension	Subprograms issuing significant BPOINTER calls	Subprograms where values are set or modified	Definition
E	R*8	NGROUP + 1	COLLA(PUTPNT)	M5	Energy boundaries of groups from record type 3 of file 1 of data set XS.ISO2
EC	R*8	NCGROU + 1	COLLA(PUTPNT)	M6	The collapsed neutron energy boundaries
FISNU	R*8	NGROUP	COLLA(PUTPNT)	CCS	Fission reaction rate from data set XS.M.MIN
FP	R*8	NGROUP* NREG	COLLA(PUTPNT)	M4	The power-normalized fluxes from data set FR.PNC
FPC	R*8	NCGROU* NREG	COLLA(PUTPNT)	M6	The collapsed neutron energy boundaries
ISONME	R*8	NISO	COLLA(PUTPNT)	M5	Isotope name list from record type 2 of data set XS.ISO2
KE	I*4	NCGROU + 1	COLLA(PUTPNT)	M6	The group correspondence factors from record type 4 of A.COL
KI	I*4	NCGROU*6	COLLA(PUTPNT)	CCS,M7	The number of groups of upscatter and downscatter for the collapsed group structure
LINDN	I*4	NGROUP	COLLA(PUTPNT)	CCS,M7	Number of groups of downscatter
LINUP	I*4	NGROUP	COLLA(PUTPNT)	CCS,M7	Number of groups of upscatter
LIP	I*4	NGROUP*6	COLLA(PUTPNT)	CCS,M7	The number of groups of upscatter and downscatter

Array Name	Type	Dimension	Subprograms issuing significant BPOINTER calls	Subprograms where values are set or modified	Definition
LOCA	I*4	NISO	COLLA(PUTPNT)	M5	Number of records in second file of XS.ISO2 to be skipped to read data for each isotope
LOCM	I*4	NMAT*NREG	MACCOL(PUTPNT)	M3	Location in the mix table (CDMMIX) of each material for each material for each region in which it is present
MCSPEC	I*4	NCMP	MACCOL(PUTPNT)	M1	Number of isotopes comprising each material from record type 4 of B.HOMOG
MSPEC	I*4	NMAT	MACCOL(PUTPNT)	M1	Number of isotopes comprising each material from record type 2 of B.HOMOG
NC	I*4	NREG	MACCOL(PUTPNT)	M3	Composition index from record type 5 of GEOM
REG	R*8	NREG	MACCOL(PUTPNT)	M3	Region labels from record type 9 of GEOM
SCAP	R*8	NGROUP	COLLA(PUTPNT)	CCS	Absorption cross section from data set XS.M.MIN
SFIS	R*8	NGROUP	COLLA(PUTPNT)	CCS	Fission cross section from data set XS.M.MIN
SINL	R*8	NGROUP* NGROUP	COLLA(PUTPNT)	CCS	Scattering cross section from data set XS.M.MIN
SNALF	R*8	NGROUP	COLLA(PUTPNT)	CCS	Removal cross section from data set XS.M.MIN
SNP	R*8	NGROUP	COLLA(PUTPNT)	CCS	Total cross section from data set XS.M.MIN

Array Name	Type	Dimension	Subprograms issuing significant BPOINTER calls	Subprograms where values are set or modified	Definition
STR	R*8	NGROUP	COLLA(PUTPNT)	CCS	Transport cross section from XS.M.MIN
U	R*8	NGROUP + 1	COLLA(PUTPNT)	M5	Lethargy boundaries of groups from record type 3 of file 1 of data set XS.ISO2
VEL	R*8	NGROUP	COLLA(PUTPNT)	M5	Velocities from record type 3 of file 1 of data set XS.ISO2
VOLFRC	R*8	MCSLTH	MACCOL(PUTPNT)	M2	Volume fraction table from record type 4 of B.HOMOG
XTR	R*8	NCMP* NGROUP	COLLA(PUTPNT)	M8	Transport cross section from record type 4 of data set XS.C.MIN

7. MACCOL (AJC008) Data Set Usage

This section contains descriptions of all data sets used by this module. For each data set used, the following information is given:

1. The name of the data set, if it is an ARC System data set, or a description of its contents and function if it is a scratch data set used only within the module;

2. the record structure of the data set, if it is a scratch data set;

3. the names of subprograms in which the data set is read and/or written, along with a list of the record types which are read or written within each subprogram and the name of the variable in which the reference number of the data set is stored.

Complete descriptions of the record structure and contents of each ARC System data set can be found in ANL-7711 of this series.

Name or description of data set - A.COL, Collapse Data

Record structure - ARC System data set

Read in subprograms	Record types	Reference variable
MACCOL	1	KTAPE
COLLA	1, 2 and 3	ITAPE
M6	4	ITAPE

Written in subprograms - None

Name or description of data set - B.HOMOG, Binary Version of Homogenization Input

Record structure - ARC System data set

Read in subprograms	Record types	Reference variable
MACCOL	1, 3	ITAPE
M1	2, 3	ITAPE
M2	4	ITAPE

Written in subprograms	Record types	Reference variable
M3	All	KTAPE

Name or description of data set - FR.PN, Power-normalized Real Flux

Record structure - ARC System data set

Read in subprograms	Record types	Reference variable
COLLA	1	NTAPE
M4	2	NTAPE

Written in subprograms - None

Name or description of data set - GEOM, Geometry Data

Record structure - ARC System data set

Read in subprograms	Record types	Reference variable
MACCOL	1	JTAPE
M3	2-9	JTAPE

Written in subprograms - None

Name or description of data set - XS.C.MIN, Macroscopic Composition Cross Sections

Record structure - ARC System data set

Read in subprograms	Record types	Reference variable
COLLA, M8	1	KCTAP
M8	2, 3, 4	KCTAP

Written in subprograms - None

Name or description of data set - XS.ISO2, Problem Dependent Microscopic Group Cross Sections

Record structure - ARC System data set

Read in subprograms	Record types	Reference variable
COLLA	1	MTAPE
M5	2, 3, 4	MTAPE

Written in subprograms - None

Name or description of data set - XS.M.MIC, Collapsed Macroscopic Material Cross Sections

Record structure - ARC System data set

Written in subprograms	Record types	Reference variable
PCCHI	1, 2	LLAPE
CCS	3, 4	LLAPE

Read in subprograms - None

Name or description of data set - XS.M.MIN, Macroscopic Material Cross Sections

Record structure - ARC System data set

Read in subprograms	Record types	Reference variable
M7	1, 2, 3	LTAPE
CCS	4	LTAPE

---

8. MACCOL (AJC008) Error Messages

There were no error messages generated by this subroutine.

9. MACCOL (AJC008) Timing Information

For a cross section set with 20 materials, 20 regions and 26 energy groups, collapsing to 8 energy groups requires less than 1 minute of computer time on the IBM 360 Model 75.

10. MACCOL (AJC008) Sample Output

There is no sample output for this module.

PART SIX.
RUN-TIME MICROSCOPIC CROSS-SECTION MODIFICATION MODULE, MODXSISO (NUI006)

Documented by - H. Henryson II
Designed by - H. Henryson II
Programmed by - H. Henryson II

1. MODXSISO (NUI006) Introduction

a. Description of Capabilities

The module NUI006 reads and processes BCD information from card type 20 of the ARC System alphanumeric neutronics input data set A.NIP. These data specify run-time modifications to the cross section and fission spectrum data of the ARC System binary data sets XSISOF1 and XSISOF2.

b. Standard Paths Which Utilize This Module, and Other Modules Utilized by Each Path

Paths Utilizing This Module \ Modules Utilized By Each Path	DELDATA (CSI007) Delayed Neutron Data Preparation	INHOM (NUI001) Multigroup Cross Section Homog. Specifications	HOMOG (NUC001) Multigroup Cross Section Homog.	HHOMOG (NUC001) Material-to-Composition Cross Section Homog.	GNIP (NUI002) Neutronics Input Processor	DARC1D: DIF1D (NUC002) 1-D Diffusion Theory k_{eff} and Source Calculations	DARC1D: DIDSCH (NUC004) 1-D Diffusion Theory Criticality Search	DARC2D: DIF2D (NUC005) 2-D Diffusion Theory k_{eff} and Source Calculations	DARC2D: D2DSCH (NUC006) 2-D Diffusion Theory Criticality Search	MODXSISO (NUI006) Run-Time Microscopic Cross Section Modification	PARC1D (AJC003) 1-D Diffusion Theory Perturbation
STP001 1-D diffusion theory		X	X	X	X	X	X			X	
STP002 1-D transport theory		X	X	X	X					X	
STP003 2-D diffusion theory		X	X	X	X	X	X		X	X	
STP006 1-D diffusion +perturbation	X	X	X	X	X	X	X			X	X
STP007 2-D diffusion perturbation	X	X	X	X	X			X	X	X	
STP011 2-d transport theory		X	X	X	X					X	

b. Standard Paths Which Utilize This Module, and Other Modules Utilized by Each Path (Contd.)

Paths Utilizing This Module \ Modules Utilized By Each Path	PARC2D (AJC004) 2-D Diffusion Theory Perturbation	SNIN1D (NUI005) 1-D Discrete Ordinate Transport Theory Specifications (SNARC1D)	SNARC1D (NUC003) 1-D Discrete Ordinate Transport Theory Calculations (SNARC1D)	TARGET (NUC008) 2-D Discrete Ordinate Transport Theory Calculations	OUTPUTR (NUE002) 2-D Discrete Ordinate Transport Theory Output	OUTMAN1D (NUE001) 1-D Neutronics Output Manipulation	INVENT1D (AJC001) 1-D Neutron Inventory	INVENT2D (AJC002) 2-D Neutron Inventory	CPGEOM (AJC006) Geometry Data Set (GEOM) Copier
STP001 1-D diffusion theory						X	X		
STP002 1-D transport theory		X	X			X	X		
STP003 2-D diffusion theory						X	X	X	
STP006 1-D diffusion perturbation						X	X		X
STP007 2-D diffusion perturbation	X							X	X
STP011 2-D transport theory				X	X			X	

c. Data Sets Utilized by This Module

Upper-interface Data Sets	Records Read
A.NIP, General Input for Neutronics Calculations	Run-time Cross Section Modifiers
XS.ISO2 (File 1)	All
XS.ISO2 (File 2)	All

Lower-interface Data Sets	Records Read
SCR003, A Two File Data Set which Contains the Modified Cross Section Set in the same Format as XS.ISO (File 1) and XS.ISO (File 2). On leaving the Module NUI006, the ARC System Glossary Tables have been Modified to return this data Set when 'XS.ISO2' is referenced and the unmodified Data Set when 'SCR003' is referenced	All

2. MODXSISO (NUI006) Description of Problem and Method of Solution

a. Introduction

The neutronics modules within the ARC System make use of isotopic cross section information in the format of the interface data sets XSISOF1 and XSISOF2. In general these few-group cross section sets are generated from basic data by use of multigroup codes such as MC^2. It is often necessary to modify the few group sets for a given problem without running a multigroup code. The module NUI006 provides the capability for fast and convenient modification of the data sets XSISOF1 and XSISOF2 according to the algorithm

$$x = Ax + B$$

where 'x' represents the group cross section or fission spectrum vector or matrix to be modified, A and B are group dependent constants user input through the type 20 cards of the BCD data set A.NIP. Although the module was designed to create a temporary data set which would be deleted after problem execution, the format of the modified data set is identical to the original and, consequently, could be saved for later use.

b. Cross-section Modification

The following group cross sections of all isotopes of data set XS.ISO2 (File 2) may be modified by use of the module NUI006:

1) σ_{tr} transport cross section
2) σ_c capture (n,γ) cross section
3) $\sigma_{n,\alpha}$ (n,α) cross section
4) $\sigma_{n,p}$ (n,p) cross section
5) σ_f fission cross section
6) $\nu\sigma_f$ number of fission neutrons per fission times fission cross section

7) $\sigma^{o}_{e\ell}(j \rightarrow j)$ anisotropic self-scatter cross section

8) $\sigma^{(\ell)}_{in}$ inelastic scatter transfer matrix for all Legendre orders

9) $\sigma^{(\ell)}_{e\ell}$ elastic scatter transfer matrix for all Legendre orders

10) $\sigma^{(\ell)}_{n,2n}$ (n,2n) scatter matrix for all Legendre orders.

All of the quantities given are group dependent and the user may specify constants A and B separately for each group or constant for a number of groups. Default options are provided for group selection.

c. Fission-spectrum Modification

The isotopic fission spectrum vector or matrix of data set XSISOF2 may be modified according to the same algorithm provided for cross section modification. It is also possible to modify the set fission spectrum data of XSISOF1 by specifying 'SETCHI' as the isotope label on the type 20 card of A.NIP. There are no normalization checks provided with regard to fission spectrum modifications.

d. Module Limitations

A number of input restrictions are imposed in using the module NUI006. Quite generally the restrictions imply that is is not possible to modify the structure of the data sets XSISO2 (file 1) and XSISO2 (File 2). In particular;

1) It is not possible to modify a non-fissionable isotope with input applicable to σ_f, $\nu\sigma_f$ or fission spectrum data.

2) The scattering band width (number of upscatter plus number of downscatter plus one) of any group may not be modified.

3) An isotope which uses the set chi fission spectrum may not be modified by input applicable to isotope dependent fission spectrum data.

4) The vector or matrix character of fission spectrum data may not be modified.

5) BCD input cards (card type 20 of A.NIP) to the module are processed sequentially so that data pointing to the same isotope and the same group on different cards would act cummulatively.

e. Output Edits

The only edits provided by the module NUI006 are on entering:

```
****  MODULE NUI006 HAS BEEN ENTERED
```

and on exiting:

```
****  EXECUTION OF MODULE NUI006 COMPLETE TIME SPENT IN MODULE
        NUI006=...MINUTES
```

3. MODXSISO (NUI006) Description of Module Flow

The module NUI006 is made up of a main program and a single subroutine DOWORK. In addition the ARC System segments

SYSTEM,SQUEZE,LINK,LOAD,IBCOM,BPOINTER

are required.

a. Overlay Structure Diagram

```
MAIN
DOWORK
SYSTEM
SQUEZE
LINK
LOAD
IBCOM
BPOINTER
```

b. Diagrammatic Subprogram Logic Flow

```
MAIN
  ↓
DOWORK
```

c. Descriptive Subprogram Logic Flow

The main routine of module NUI006 performs three chores:

i) Initialize variables and establish data set reference numbers through calls to subroutine SNIFF.

ii) Initialize BPOINTER tables and establish pointers for all variably dimensioned arrays.

iii) Accounting duties such as timing and closing (REWIND) of data sets.

On completion of ii) above, the MAIN routine calls DOWORK. The work performed by this subroutine may be divided into four parts:

i) Read type 20 cards of A.NIP,

ii) Read cross section and fission spectrum data of XS.ISO2,

iii) Modify appropriate data as specified,

iv) Write modified data on new data set SCR003.

On returning from subroutine DOWORK, the main program issues a call to subroutine SNIFF with the special argument 'CHANGE'. As a consequence the tables in SNIFF are modified so that reference to XS.ISO2 gives the data set reference number of the modified cross section data set, and

reference to SCR003 gives the data set reference number of the original cross section data set XS.ISO2. The tables of SNIFF are also modified through a call to SNIFF which deletes reference to data set XS.ISO.

4. MODXSISO (NUI006) Subprogram Descriptions

This section contains descriptions of all subprograms which are part of the module NUI006. Each subprogram description begins with a listing of the name and argument list as they appear in a Fortran CALL. Subsection 1 is a list of the subroutine arguments in order of appearance with type, dimension and definition information. The three variable types referenced are:

I*4 32 bit integer word

R*4 32 bit floating point word

R*8 64 bit floating point word

Subsection 2 contains the names of all common blocks used by the subprogram. Each is followed by a list of the variables in the common block used by the subprogram, together with definitions.

Subsection 3 contains a listing of all variables which are local to the subprogram along with type and definition information.

Subsection 4 describes the functions performed by the subprogram.

Subsection 5 lists all subprograms called explicitly by this subprogram.

Subsection 6 lists the subprograms which call this subprogram.

Subsection 7 describes error messages which may be generated by the subprogram together with the action taken.

Main Program MAIN

1. Arguments - None

2. Common Blocks

/DSRNO/

Variables used from this common block

Name	Type	Definition
NIP	I*4	Data set reference number of data set A.NIP
NISO	I*4	A dummy variable used in call to SNIFF
NISO2	I*4	Data set reference number of data set XS.ISO2
NSCR	I*4	Data set reference number of data set SCR003

/CODEP/

Variables used from this common block

Name	Type	Definition
N20	I*4	Number of type 20 cards present in data set A.NIP
NGROUP	I*4	Number of energy groups defined in first record of XS.ISO2
NISOS	I*4	Number of isotopes defined in first record of XS.ISO2

3. Local Variables

Name	Type	Definition
DINAM	R*8	'DINAM' for array name
DIMOD	R*8	'DIMOD' for array name
DJI	R*8	'DJI' for array name

Name	Type	Definition
DJF	R*8	'DJF' for array name
A	R*8	'A' for array name
B	R*8	'B' for array name
TYPE	R*8	'TYPE' for array name
DLOCA	R*8	'DLOCA' for array name
DTEMP	R*8	'DTEMP' for array name
DINDX	R*8	'DINDX' for array name
DITEMP	R*8	'DITEMP' for array name
DJ1	R*8	'DJ1' for array name
DJ2	R*8	'DJ2' for array name
DISET	R*8	'DISET' for array name
DUM	R*8	Dummy argument in TLEFT
X1	R*4	Time left in problem; time (min) spent in module
MAXSIZ	I*4	Size of main core container
IPRNT	I*4	BPOINTER debugging print flag (0)
BLK(1)	R*8	BPOINTER container array
ANIP	R*8	Dummy variable
JJ	I*4	Number of highest number standard input card in A.NIP
KK	I*4	Number of non-standard data cards in A.NIP
IMOD(100)	I*4	Number of cards of each type in A.NIP
N19	I*4	$N19 = \sum_{I=1}^{19} IMOD(I)$
NDJI	I*4	Pointer for array DJI
NDJF	I*4	Pointer for array DJF
NDJ1	I*4	Pointer for array DJ1

Name	Type	Definition
NDJ2	I*4	Pointer for array DJ2
NA	I*4	Pointer for array A
NB	I*4	Pointer for array B
NTYPE	I*4	Pointer for array TYPE
NITEMP	I*4	Pointer for array DITEMP
NDIMOD	I*4	Pointer for array DIMOD
NSET	I*4	Pointer for array DISET
ITEMP	I*4	Temporary storage for array length
NDINAM	I*4	Pointer for array DINAM
NDLOCA	I*4	Pointer for array DLOCA
NINDX	I*4	Pointer for array DINDX
NDTEMP	I*4	Pointer for array DTEMP
X2	R*4	Time left in problem on completion of module
JTEMP	I*4	Temporary storage for array length
MAXBLK	I*4	Size of bulk storage array (0)

4. Functions and tasks performed by this program

On entry to the main program of module NUI006, variables to be used as array names are initialized, the time remaining in the problem obtained and a message printed to indicate that the module has been entered. Calls to subroutine SNIFF establish the data set reference numbers of the ARC System data sets A.NIP, XS.ISO2 and SCR003. A call to SNIFF with dsname XS.ISO and argument 2 establishes XS.ISO as a "new" data set in the SNIFF tables even if it were previously referenced. Data set A.NIP is then read to establish N20, the number of type 20 cards present and to read past the records of the card types 1-19. The first record of XS.ISO2 is read to determine NGROUP and NISOS, the number of energy groups and the number of isotopes in the problem respectively. The size of the BPOINTER container array is calculated

MAXSIZ = 8*N20+2*NISOS+MAX(7*NGROUP,NGROUP*NGROUP)

and the BPOINTER array BLK initialized using only main core and an array size (MAXSIZ+1). The routine then sets up the appropriate fourteen variably dimensioned arrays through calls to PUTPNT and GETPNT. After setting up the arrays, subroutine DOWORK is called and on returning from DOWORK the data sets XS.ISO2 and SCR003 are closed (REWIND). SNIFF is then called with the special dsname 'CHANGE' to interchange the data set reference numbers of the two data sets. Finally the time required for execution is calculated after a call to TLEFT and a message printed indicating execution to be complete. RETURN is made to the calling program.

5. Subprograms called by this program

TLEFT
BULK
POINTR
SNIFF
PUTPNT
GETPNT
DOWORK
FREE

6. Subprograms calling this program

This program may be invoked by any path or module through the statement: CALL LINK(8HNUI006)

7. Error messages generated by this program - None

Subroutine DOWORK (ISONME, LOCA, TEMP, MODNAM, INJ, OUTJ, A, B, TYPE, INDX, NTEMP, JL1, JL2, ISET)

1. Arguments

Name	Type	Dimension	Definition
ISONME	R*8	1	Isotope names as specified in XS.ISO2
LOCA	I*4	1	Isotope record locations as specified in XS.ISO2

Name	Type	Dimension	Definition
TEMP	R*8	1	Floating point data from XS.ISO2
MODNAM	R*8	1	Isotope names as specified on type 20 cards of A.NIP
INJ	I*4	1	Initial energy group as specified on type 20 cards of A.NIP
OUTJ	I*4	1	Final energy group as specified on type 20 cards of A.NIP
A	R*8	1	Coefficient used in changing data as specified on type 20 cards of A.NIP
B	R*8	1	Coefficient used in changing data as specified on type 20 cards of A.NIP
TYPE	I*4	1	Cross section type to be modified as specified on type 20 card of A.NIP
INDX	I*4	1	Indexing array
NTEMP	I*4	1	Indexing array
JL1	I*4	1	Initial energy group as specified on type 20 card of A.NIP
JL2	I*4	1	Final energy group as specified on card type 20 of A.NIP
ISET	I*4	1	Indexing array

2. Common Blocks

/DSRNO/

Variables used from this common block

Name	Type	Definition
NIP	I*4	Data set reference number of data set A.NIP
NISO2	I*4	Data set reference number of data set XS.ISO2
NSCR	I*4	Data set reference number of data set SCR003

/CODEP/

Variables used from this common block

Name	Type	Definition
N20	I*4	Number of type 20 cards present in data set A.NIP
NGROUP	I*4	Number of energy groups defined in first record of XS.ISO2
NISOS	I*4	Number of isotopes defined in first record of XS.ISO2

3. Local Variables

Name	Type	Definition
SET	R*8	'SETCHI'
NSET	I*4	Number of type 20 cards in A.NIP referencing 'SETCHI'
I	I*4	DO loop index
ITEMP	I*4	Temporary variable used for array lengths and counting
J	I*4	DO loop index
L	I*4	Temporary variable used in setting up array INDX and DO loop index
LOCATE	I*4	Number of records of XS.ISO2 which have been read
NTOTAL	I*4	Indicator giving number of modified card being processed
IMARK	I*4	= 0 isotope not modified 1 isotope is modified
MKRSCT	I*4	= 0 do not modify scatter cross sections 1 modify scatter cross sections
ICHI	I*4	Isotope fission flag
LIN	I*4	Maximum order of inelastic scatter
LEL	I*4	Maximum order of elastic scatter

Name	Type	Definition
LN2N	I*4	Maximum order of (n,2n) scatter
LEN	I*4	Length of cross section array to be read
JJ	I*4	DO loop index
LMAX	I*4	(LIN+LEL+LN2N) and maximum order of scattering
LINUP	I*4	Number of inelastic upscatter groups
LINDN	I*4	Number of inelastic downscatter groups
LELUP	I*4	Number of elastic upscatter groups
LELDN	I*4	Number of elastic downscatter groups
LN2NUP	I*4	Number of (n,2n) upscatter groups
LN2NDN	I*4	Number of (n,2n) downscatter groups
ITCHI	I*4	= ICHI*NGROUP
N	I*4	Index to reference a particular card type 20
MODTYP	I*4	Modifier type associated with card N
IF1	I*4	Initial energy group
IF2	I*4	Final energy group
II1	I*4	Initial energy group
II2	I*4	Final energy group
II	I*4	DO loop index; index to array element
IBUF	I*4	Index to array element associated with modification
ITOP	I*4	Upper index for array in reading data from XS.ISO (file 2)
ILOW	I*4	Lower array index in reading data from XS.ISO (file 2)
MODGRP	I*4	Lower group index for modifier
MODHI	I*4	Higher group index for modifier

Name	Type	Definition
NCOUNT	I*4	Branching index for scattering type
LTEMP	I*4	Maximum array size
NUTEMP	I*4	Location index in scattering arrays
NUMBER	I*4	Constant to compare with modifier type for scatter arrays
IL1	I*4	Lower group modifier index
IL2	I*4	Upper group modifier index
IU1	I*4	Lower group modifier index
IU2	I*4	Upper group modifier index
NN	I*4	DO loop index; array index
LSET	I*4	Number of card type 20 referencing SETCHI
LDN	I*4	Number of groups downscatter
LUP	I*4	Number of groups upscatter

4. Functions and tasks performed by this subroutine

The bulk of the work performed by the module NUI006 is done in subroutine DOWORK. The general flow through the subroutine is outlined below.

After initializing variables the "ISOTOPE NAMES" record of XS.ISO2 (file 1) is read. The names read are then modified to remove blanks and become left-justified through a call to the ARC System routine SQUEZE. This procedure is consistent with other ARC System modules and as a consequence the user need not worry about the positioning of blanks on input. On the other hand isotope names may not be distinguished simply by blanks as they would not differ after being "squeezed". The modified isotope names record is then written on data set SCR003. The "GROUP STRUCTURE" record is read from XSISOF1 and written to SCR003 without modification as is the "SET FISSION SPECTRUM" record. An end of file mark is written on SCR003 and read past XSISOF1.

The type 20 cards of data set A.NIP are then read and processed. Again isotope names are compressed and the default options applicable to the group

numbers on columns 19-30 are checked and processed if necessary. An index is then set up to associate a given card 20 with a location on the data set XS.ISO2. This is done through the 2*N20 locations of the variable INDX. The first N20 locations have the record locations, as specified in the ISOTOPE NAMES record of XS.ISO2 (file 1), of the isotopes given in columns 7-12 of the corresponding N20 type 20 cards. A card which referenced the isotope name 'SETCHI' was given a location value greater than the largest value on the data set (LOCA (NISOS)+1). The second N20 locations of INDX order the N20 cards as they will be processed. This is best illustrated by an example. Let there be three isotopes on the data set XS.ISO2, ISO1, ISO2 and ISO3 with record locations 1, 10, 20 respectively. The type 20 card input is given by:

```
20     ISO2   ----
20     SETCHI ----
20     ISO2   ----
20     ISO1   ----
20     ISO3   ----
```

With these specifications we would have:

INDX(1) = 10, INDX(2) = 21, INDX(3) = 10, INDX(4) = 1, INDX(5) = 20
INDX(6) = 2, INDX(7) = 5, INDX(8) = 3, INDX(9) = 1, INDX(10) = 4

Having ordered the type 20 cards, they are processed sequentially according to the second N20 locations of INDX.

If the data set XS.ISO2 is located at the position of an isotope not to be modified, all of the records of XS.ISO2 (file 2) pertinent to that isotope are read and copied to data set SCR003. At this point control is transferred to a section of coding which processes the changes specified on the type 20 cards for the isotope in question. The array NTEMP is first established to index the particular type 20 cards being processed. For the example above, when processing isotope ISO2, we would have

NTEMP(1)=1, NTEMP(2)=3

that is, the first and third type 20 cards, and the variable ITEMP is set to the number of cards being processed for the isotope. If an ISOTOPE FISSION SPECTRUM record is present in data set XSISOF2 it is then read. The type 20 cards referencing the isotope are interrogated to find any specifying changes to the isotopic fission spectrum. If any are present the required

changes are made to the data read from XSISOF2. The modified (or unmodified) data are then written on SCR003. The same process is then repeated with the PRINCIPAL CROSS SECTIONS record. On completion of this processing the INDEX FOR SCATTERING GROUP record of XS.ISO2 (file 2) is read. If no scattering data are present control is returned to begin processing the next isotope. If scattering data are present and there are type 20 cards present to modify these data control is again passed to a section of coding to process these changes. Otherwise the same coding is used to read and copy XS.ISO2 (file 2) as that used if the isotope in question had no type 20 card information.

When the record count indicates that all isotope data have been processed a check is made to see if the special modify name 'SETCHI' were referenced on any of the input. If not control is returned to the main program of NUI006. If the SET FISSION SPECTRUM record of XS.ISO2 (file 1) is to be modified, the two data sets SCR003 and XS.ISO2 are rewound and the first three records of XS.ISO2 are again read and copied to SCR003. In a manner analogous to that described for the cross section changes above, the chi vector or matrix data are then modified with the indexing array ISET playing the same role as NTEMP above. After writing the modified data on SCR003 an end file mark is written and control is returned to the main program of NUI006.

5. Subprograms called by this subroutine

SQUEZE (ARC System routine)
ABSTOP (IBM entry point)

6. Subprograms calling this subroutine

MAIN routine of module NUI006

7. Error messages generated by this subroutine

i) ********** nnnnnn IS NOT AN ISOTOPE NAME IN THE DATA SET XS.ISO2--EXECUTION TERMINATING

ii) TRYING TO PROCESS THE n TYPE 20 CARD AND COULD NOT FIND THE PROPER INDEX

iii) TRYING TO PROCESS THE n TYPE 20 CARD FOR ISOTOPE nnnnnnnn WHICH IS NOT FISSIONABLE WITH FISSION MODIFIERS.
**********EXECUTION IS TERMINATED

5. MODXSISO (NUI006) Common Block Descriptions

This section provides information relating to the common blocks used by the module NUI006.

/CODEP/

Name	Type	Subprograms where values are set or modified	Definition
N20	I*4	MAIN	The number of type 20 cards present in data set A.NIP
NGROUP	I*4	MAIN	The number of energy groups defined in the first record of data set XS.ISO2
NISOS	I*4	MAIN	The number of isotopes defined in the first record of data set XS.ISO2

/DSRNO/

Name	Type	Subprograms where values are set or modified	Definition
NIP	I*4	MAIN	Data set reference number of data set A.NIP
NISO	I*4	MAIN	A dummy variable used in calls to SNIFF
NISO2	I*4	MAIN	Data set reference number of data set XS.ISO2
NSCR	I*4	MAIN	Data set reference number of data set SCR003

6. MODXSISO (NUI006) Dynamic Storage Array Allocation

This section provides descriptive information regarding all variably dimensioned arrays used by the module NUI006. The arrays are defined using the facilities provided by the dynamic allocation routine BPOINTER. For each array the following information is provided:

1. Array name in BPOINTER tables
2. Type
3. Dimension
4. Name of subprogram making BPOINTER call
5. Name of subprogram where array elements are set or altered
6. Definition of array contents.

In the dimension information the variables have the meaning:

N20	number of type 20 cards present in A.NIP
NISOS	number of isotopes as defined in XS.ISO2 (file 1)
NGROUP	number of energy groups as defined in XS.ISO2 (file 1)

Array Name	Type	Dimension	Subprograms issuing significant POINTR calls	Subprograms where values are set or modified	Definition
DIMOD	R*8	N20	MAIN	DOWORK	ISOTOPE names defined in Cols. 7-12 of type 20 cards of A.NIP
DJI	I*4	N20	MAIN	DOWORK	Initial energy group number as defined in Cols. 19-24 of type 20 cards of A.NIP
DJF	I*4	N20	MAIN	DOWORK	Final energy group number as defined in Cols. 25-30 of A.NIP
DJ1	I*4	N20	MAIN	DOWORK	Initial energy group number as defined in Cols. 61-66 of A.NIP
DJ2	I*4	N20	MAIN	DOWORK	Final energy group number as defined in Cols. 67-72 of A.NIP
A	R*8	N20	MAIN	DOWORK	Coefficient used in changing microscopic data: f = Af + B. Defined in Cols. 37-48 of A.NIP
B	R*8	N20	MAIN	DOWORK	Coefficient used in changing microscopic data: f = Af + B. Defined in Cols. 49-60 of A.NIP
TYPE	I*4	N20	MAIN	DOWORK	"Cross section" type to be modified as defined in Cols. 13-18 of A.NIP
DITEMP	I*4	N20	MAIN	DOWORK	An indexing array which indexes the type 20 cards of A.NIP associated with changes for a given isotope

Array Name	Type	Dimension	Subprograms issuing significant POINTR calls	Subprograms where values are set or modified	Definition
DISET	I*4	N20	MAIN	DOWORK	An indexing array which indexes the type 20 cards of A.NIP associated with changes in the set chi data
DINAM	R*8	NISOS	MAIN	DOWORK	Isotope names as defined in record 2 of XS.ISO2.
DLOCA	I*4	NISOS	MAIN	DOWORK	Isotope locations as defined in record 2 of XS.ISO2
DINDX	I*4	2*N20	MAIN	DOWORK	The first N20 locations give the location as defined in record 2 of XS.ISO2 of the isotope specified on the type 20 card of A.NIP. The remaining N20 locations give the relative order of the isotope specified on the type 20 card of A.NIP with respect to the other isotopes being modified
DTEMP	R*4	max(7*NGROUP NGROUP**2)	MAIN	DOWORK	All of the floating point data read from XS.ISO2 and written on SCR003 is managed in this array

7. MODXSISO (NUI006) Data Set Usage

This section contains descriptions of the data sets used by the module NUI006. The following information is given:

1. The name of the data set.

2. The names of the subprograms in which the data set is read or written and a list of the record types referenced as well as the variable name corresponding to the data set reference number.

Complete descriptions of the record structure and contents of each ARC system data set can be found in ANL-7711 of this series.

Name or description of data set - A.NIP, General Input for Neutronics Calculations

Record structure - ARC System data set

Read in subprograms	Record types	Reference variable
MAIN	1 through 19	NIP
DOWORK	Run-time Cross Section Modifiers (type 20)	NIP

Written in subprograms - None

Name or description of data set - SCR003, Modified Microscopic Group Cross Sections

Record structure - Identical to ARC System data set XS.ISO

Written in subprograms	Record types	Reference variable
MAIN	File Size (type 1)	NSCR
DOWORK	All Records except Type 1 (file size)	NSCR

Read in subprograms - None

Name or description of data set - XS.ISO2, Microscopic Group Cross Sections

Record structure - Identical to ARC System data set XS.ISO

Read in subprograms	Record types	Reference variable
MAIN	File Size (type 1)	NISO2
DOWORK	All Records Except Type 1 (file size)	NISO2

---

8. MODXSISO (NUI006) Error Messages

The only error messages generated by the module NUI006 are given in subroutine DOWORK.

i) ********** nnnnnn IS NOT AN ISOTOPE NAME IN THE DATA SET XS.ISO2--EXECUTION TERMINATING

ii) TRYING TO PROCESS THE n TYPE 20 CARD AND COULD NOT FIND THE PROPER INDEX

iii) TRYING TO PROCESS THE n TYPE 20 CARD FOR ISOTOPE nnnnnnnn WHICH IS NOT FISSIONABLE WITH FISSION MODIFIERS
**********EXECUTION IS TERMINATED

9. MODXSISO (NUI006) Timing Information

A problem was executed requiring the processing of 75 type 20 cards in approximately two seconds. Problem timing is in general dependent on the size of the isotope cross section set, XS.ISO2, in question since the reading and writing of the cross section set takes far more time than the processing of the data.

10. MODXSISO (NUI006) Sample Output

```
*****  MODULE NUI006 HAS BEEN ENTERED

*****  EXECUTION OF MODULE NUI006 COMPLETED
       TIME SPENT IN MODULE NUI006 = 0.04 MINUTES
```

ARGONNE NATIONAL LAB WEST
3 4444 00011426 4

B