ANL-7717

ANL-7717

Argonne National Laboratory

The ARC System One-dimensional Transport Theory Capability, SNARC1D

by

L. T. Bryant and G. K. Leaf

PROPERTY OF
ARGONNE NATIONAL LAB
IDAHO LIBRARY

The facilities of Argonne National Laboratory are owned by the United States Government. Under the terms of a contract (W-31-109-Eng-38) between the U. S. Atomic Energy Commission, Argonne Universities Association and The University of Chicago, the University employs the staff and operates the Laboratory in accordance with policies and programs formulated, approved and reviewed by the Association.

MEMBERS OF ARGONNE UNIVERSITIES ASSOCIATION

The University of Arizona
Carnegie-Mellon University
Case Western Reserve University
The University of Chicago
University of Cincinnati
Illinois Institute of Technology
University of Illinois
Indiana University
Iowa State University
The University of Iowa
Kansas State University
The University of Kansas
Loyola University
Marquette University
Michigan State University
The University of Michigan
University of Minnesota
University of Missouri
Northwestern University
University of Notre Dame
The Ohio State University
Ohio University
The Pennsylvania State University
Purdue University
Saint Louis University
Southern Illinois University
The University of Texas at Austin
Washington University
Wayne State University
The University of Wisconsin

NOTICE

This report was prepared as an account of work sponsored by the United States Government. Neither the United States nor the United States Atomic Energy Commission, nor any of their employees, nor any of their contractors, subcontractors, or their employees, makes any warranty, express or implied, or assumes any legal liability or responsibility for the accuracy, completeness or usefulness of any information, apparatus, product or process disclosed, or represents that its use would not infringe privately-owned rights.

Printed in the United States of America
Available from
National Technical Information Service
U.S. Department of Commerce
5285 Port Royal Road
Springfield, Virginia 22151
Price: Printed Copy $6.00; Microfiche $0.95

ANL-7717
Reactor Technology

ARGONNE NATIONAL LABORATORY
9700 South Case Avenue
Argonne, Illinois 60439

The ARC System
One-dimensional Transport Theory Capability, SNARC1D

by

L. T. Bryant and G. K. Leaf

Applied Mathematics Division

Contributors

G. J. Duffy*	Applied Mathematics Division
H. Henryson, II	Applied Physics Division
H. Greenspan	Applied Physics Division

January 1971

*Now at Northern Illinois University, DeKalb

PREFACE

This volume is one of a series describing the Argonne Reactor Computation (ARC) System, which has been executed on IBM System 360 computers, models 50, 75, 85, and 195, under the OS/360 operating system. The modules described herein must be used in conjunction with modules described in other volumes.

The ARC System consits of a library of computational modules for fast reactor design calculations, along with a set of system modules which provide an environment for the operation of the computational modules. The modules are used in a selected order by directive programs called "paths." Inter-module communication is through ARC System data sets. The data sets are defined such that output from one computational module can be used as input to others. This allows for the automation into a single run of what would normally be a sequence of runs.

ANL-7711 of this series contains descriptions of the ARC System history and philosophy, of the software environment in which the ARC System operates, of the system modules which comprise the software environment, and of the ARC System data sets.

A description of the ARC System standard paths can be found in ANL-7712.

The ARC System was previously described in report ANL-7332, "The Argonne Reactor Computation (ARC) System," B. J. Toppel, Ed. (November 1967).

CONTENTS OF VOLUMES IN THIS SERIES

ANL-7711 The System Aspects and Interface Data Sets of the Argonne Reactor Computation (ARC) System

ANL-7712 The ARC System Standard Paths

ANL-7713 The ARC System Neutronics Input Processor

Part One. Neutronics Input Processor Module, GNIP (NUI002)

Part Two. Geometry Data Set (GEOM) Copier, CPGEOM (AJC006)

ANL-7714 The ARC System Cross-section Homogenization and Modification Capabilities

Part One. Multigroup Cross-section Homogenization Specification Module, INHOMG (NUI001)

Part Two. Multigroup Cross-section Homogenization Calculation Module, HOMOG (NUC001)

Part Three. Material-to-Composition Cross-section Homogenization Calculation Module, HHOMOG (NUC007)

Part Four. Microscopic Cross-section Group Collapse Module, MICCOL (AJC007)

Part Five. Macroscopic Cross-section Group Collapse Module, MACCOL (AJC008)

Part Six. Run-time Microscopic Cross-section Modification Module, MODXSISO (NUI006)

ANL-7715 The ARC System One-dimensional Diffusion Theory Capability, DARC1D

Part One. One-dimensional, Multigroup Diffusion Theory Module for k-effective and Source Calculations, DIF1D (NUC002)

Part Two. One-dimensional, Multigroup Diffusion Theory Criticality Search Module, D1DSCH (NUC004)

ANL-7716 The ARC System Two-dimensional Diffusion Theory Capability, DARC2D

Part One. Two-dimensional, Multigroup Diffusion Theory Module for k-effective and Source Calculations, DIF2D (NUC005)

Part Two. Two-dimensional, Multigroup Diffusion Theory Criticality Search Module, D2DSCH (NUC006)

ANL-7717 The ARC System One-dimensional Transport Theory Capability, SNARC1D

Part One. One-dimensional, Discrete Ordinate Transport Theory Specification Module, SNIN1D (NUI005)

Part Two. One-dimensional, Discrete Ordinate Transport Theory Calculation Module, SNARC1D (NUC003)

ANL-7718 The ARC System Two-dimensional Transport Theory Capability

Part One. Two-dimensional, Discrete Ordinate Transport Theory Calculation Module, TARGET (NUC008)

Part Two. Two-dimensional, Discrete Ordinate Transport Theory Output Manipulation Module, OUTPUTR (NUE002)

ANL-7719 The ARC System One-dimensional Adjunct Calculations and PARC1D (AJC003)

Part One. One-dimensional Diffusion Theory Perturbation Module, PARC1D (AJC003)

Part Two. One-dimensional Neutron Inventory Module, INVENT1D (AJC001)

Part Three. One-dimensional Neutronics Output Manipulation Module, OUTMAN1D (NUE001)

ANL-7720 The ARC System Two-dimensional Adjunct Calculations

Part One. Two-dimensional Diffusion Theory Perturbation Module, PARC2D (AJC004)

Part Two. Two-dimensional Neutron Inventory Module, INVENT2D (AJC002)

ANL-7721 The ARC System Fuel Cycle Analysis Capability, REBUS

Part One. Fuel Cycle Specification Module, INFUEL (FCI001)

Part Two. Fuel Cycle Analysis Module, FUELCY (FCC001)

ANL-7722 The ARC System Cross-section Generation Capabilities, ARC-MC^2

Part One. Epithermal Cross-section Specification Module, INPUT

Part Two. Resonance Cross-section Calculation Module, REXSEC (CSC001)

Part Three. Nonresonant Cross-section and Fundamental-Mode Spectrum Calculation Module, SCSFM (CSC002)

Part Four. Broad-group Cross-section and Fundamental-Mode Spectrum Calculation Module, BCSFM (CSC003)

Part Five. Cross-section Data Set Editor Module, XSEDIT (CSE001)

Part Six. Delayed Data Preparation Module, DELDATA (CSI007)

ANL-7723 The ARC System Spatial Flux Synthesis Capability

ANL-7724 The ARC System Two-dimensional Kinetics Capability

TABLE OF CONTENTS

Page

ABSTRACT 13

PART ONE. ONE-DIMENSIONAL, DISCRETE ORDINATE TRANSPORT THEORY SPECIFICATION MODULE, SNIN1D (NUI005) 15

1. SNIN1D (NUI005) Introduction 17
   a. Description of Capabilities 17
   b. Standard Paths Which Utilize This Module, and Other Modules Utilized by Each Path 18
   c. Data Sets Utilized by This Module 19

2. SNIN1D (NUI005) Description of Problem and Method of Solution . . . 21
   a. Introduction. 21
   b. Module-Dependent Input Processing 21
   c. Output Edits. 22

3. SNIN1D (NUI005) Description of Module Flow. 23
   a. Overlay Structure Diagram 24
   b. Diagrammatic Subprogram Logic Flow. 25
   c. Descriptive Subprogram Logic Flow 26

4. SNIN1D (NUI005) Subprogram Descriptions 29
   Main Program NUI005 30
   Subroutine ARCERR 35
   Block Data for SNIN1D (NUI005). 36
   Subroutine DUMPDB 37
   Subroutine READCD 41
   Subroutine READ05 46
   Subroutine READ06 49
   Subroutine READ78 52
   Subroutine T1EDIT 53
   Subroutine ZERCOM 57

5. SNIN1D (NUI005) Common Block Descriptions 61
   /ARNAME/. 62
   /ARRAY/ 62
   /DSINP/ 63
   /LOCATE/. 63
   /MODNAM/. 63
   /MODULE/. 64
   /NSVAR/ 64
   /PMW/ 64
   /SIMVAR/. 65
   /SNLIBR/. 66
   /SVCDI/ 66

TABLE OF CONTENTS (Cont'd)

Page

6. SNIN1D (NUI005) Dynamic Storage Array Allocation. 69

7. SNIN1D (NUI005) Data Set Usage. 73

8. SNIN1D (NUI005) Error Messages. 79

9. SNIN1D (NUI005) Timing Information. 87

10. SNIN1D (NUI005) Sample Output 89

PART TWO. ONE-DIMENSIONAL, DISCRETE ORDINATE TRANSPORT THEORY COMPUTATION MODULE, SNARC1D (NUC003) 91

1. SNARC1D (NUC003) Introduction 93
   a. Description of Capabilities 93
   b. Standard Paths Which Utilize This Module, and Other Modules Utilized by Each Path 94
   c. Data Sets Utilized by This Module 95

2. SNARC1D (NUC003) Description of Problem and Method of Solution. . . 97
   a. Introduction. 97
   b. The Mathematical Model. 99
   c. The Finite Difference Equations 103
   d. Description of Source Components. 104
   e. Boundary Conditions 106
   f. Inner Iterations. 106
   g. Outer Iterations. 109
   h. Searches. 110
   i. Diffusion Theory Option 114

3. SNARC1D (NUC003) Description of Module Flow 119
   a. Overlay Structure Diagram 120
   b. Diagrammatic Subprogram Logic Flow. 121
   c. Descriptive Subprogram Logic Flow 122

4. SNARC1D (NUC003) Subprogram Descriptions. 129
   Main Program NUC003 130
   Subroutine ADJINT 132
   Subroutine ARCERR 134
   Block Data for SNARC1D (NUC003) 135
   Subroutine CALLXS 136
   Subroutine CHINM1 137
   Subroutine CHXSEC 139

TABLE OF CONTENTS (Cont'd)

Page

Subroutine CLEARF. 143
Subroutine CMPFLG. 144
Subroutine COMZER. 145
Subroutine CONVRG. 148
Subroutine CSCGP1. 150
Subroutine CSCIN1. 152
Subroutine DTSIM1. 155
Subroutine EXEC. 158
Subroutine FINDGP. 160
Subroutine FPRNT1. 161
Subroutine FSORCE. 166
Subroutine FXDSC1. 173
Subroutine GEOFN1. 175
Subroutine GEOMS1. 178
Subroutine GEOMOD. 180
Subroutine GETLNO. 182
Subroutine INNER1. 184
Subroutine IPRINT1 192
Subroutine MODRD1. 194
Subroutine MODXS 196
Subroutine MPRIN1. 200
Subroutine NUPAGE. 203
Subroutine ONEDCC. 204
Subroutine ONEDCD. 207
Subroutine ONEDDC. 207
Subroutine ONEDTR. 210
Subroutine OUTER1. 211
Subroutine PRANGF. 220
Subroutine PROCDS. 226
Subroutine READAN. 240
Subroutine READBL. 243
Subroutine READB2. 244
Subroutine READB3. 247
Subroutine READCP. 248
Subroutine READT4. 251
Subroutine READXS. 255
Subroutine RITEXS. 264
Subroutine RITXS1. 265
Subroutine SCANIS. 268
Subroutine SETADD. 271
Subroutine SETARG. 279
Subroutine SETFBK. 285
Subroutine SHELL1. 286
Subroutine SKIPXS. 288
Subroutine SNARC1. 290
Subroutine SNCHK1. 292
Subroutine SNUFF 294
Subroutine TABLE 295
Subroutine TRANXS. 296

TABLE OF CONTENTS (Cont'd)

		Page
5.	SNARC1D (NUC003) Common Block Descriptions	303
	/ARRAY/	304
	/BUFFER/	304
	/DDUFFY/	304
	/DSRNOS/	304
	/DSRNO2/	305
	/EXTPNT/	305
	/EXTPT2/	306
	/INT/	307
	/ISANIS/	307
	/LOCATE/	307
	/MAXARY/	308
	/MODULE/	308
	/NAMADJ/	308
	/NAMES/	308
	/NAMES2/	314
	/POINT/	315
	/PRSTAR/	320
	/SIMFLP/	320
	/SIMINT/	323
	/SIMIN2/	327
	/SIMIN3/	328
	/SIMIN4/	329
	/TIMER/	330
6.	SNARC1D (NUC003) Dynamic Storage Array Allocation	331
7.	SNARC1D (NUC003) Data Set Usage	347
8.	SNARC1D (NUC003) Error Messages	357
9.	SNARC1D (NUC003) Timing Information	371
10.	SNARC1D (NUC003) Sample Output	373
ACKNOWLEDGMENT		387
REFERENCES		387

ABSTRACT

The modules in this volume are based upon a translation of the Argonne National Laboratory transport code SNARG-1D.[1] The computational module NUC003 solves the discrete-ordinate S_N approximation to the one-dimensional multi-group neutron transport equation, using the numerical approximations and solution techniques developed by Bengt Carlson.[2] Module NUI005 processes the input data required for execution of NUC003.

Module-dependent input is accepted in the form of a BCD data set and/or a binary data set. Isotropic and linearly anisotropic scattering between energy groups is permitted. Real or adjoint solutions may be calculated for homogeneous or inhomogeneous problems. Standard angular quadrature sets for S_N orders up to 16 are provided for slab and spherical geometry. Alternative angular quadrature schemes may be obtained by supplying appropriate input.

Inhomogeneous sources of two types are permitted: volume sources (neutrons per unit volume per sec) and surface sources (neutrons per unit surface area per sec).

A rudimentary group-skipping option in which user-specified groups are not recalculated during the iteration processes is provided to accelerate convergence. A P_1 calculation may be performed for specified groups. These two options are mutually exclusive.

Three types of searches can be performed to achieve a specified reactivity:

1) Dimension criticality search, in which region boundaries within the reactor may be varied and/or the size (outside dimension) of the reactor may be varied;

2) Concentration search, operating on the volume fractions of the materials modifying, as necessary, each cross section type; or

3) Inverse reactor period (α) search, in which the flux is assumed separable with respect to space and time, with time variation given by $\exp(\alpha t)$.

Output edits are provided and appropriate output data sets are written.

PART ONE.

ONE-DIMENSIONAL, DISCRETE ORDINATE TRANSPORT THEORY SPECIFICATION MODULE, SNIN1D (NUI005)

Designed by - G. J. Duffy*

Programmed by - L. T. Bryant, G. J. Duffy and H. Henryson, II

Documented by - L. T. Bryant

*Now at Northern Illinois University, DeKalb, Illinois

1. SNIN1D (NUI005) Introduction

a. Description of Capabilities

This module reads and analyzes BCD card images which are module-dependent input. These images are accepted in the form of a BCD data set A.INPTR1 and/or a binary data set SP.T1OLD. The input is collected and translated into the binary data set SP.T1NEW used by the one-dimensional transport computation module, SNARC1D (NUC003).

Insufficient or inconsistent data causes termination of processing and results in an aborted problem. A coded error message is provided in the event of abnormal termination.

b. Standard Paths Which Utilize This Module, and Other Modules Utilized by Each Path

This module is invoked by standard path STP002, one-dimensional transport theory. The modules used by STP002 are the following:

MODXSISO (NUI006)	Run-time Microscopic Cross-section Modification
INHOMG (NUI001)	Multigroup Cross Section Homogenization Specifications
HOMOG (NUC001)	Multigroup Cross Section Homogenization
GNIP (NUI002)	Neutronics Input Processor
OUTMAN1D (NUE001)	One-dimensional Neutronics Output Manipulation
INVENT1D (AJC001)	One-dimensional Neutron Inventory
SNIN1D (NUI005)	One-dimensional Discrete Ordinate Transport Theory Specifications
SNARC1D (NUC003)	One-dimensional Discrete Ordinate Transport Theory Calculations

c. Data Sets Utilized by This Module

Upper-interface Data Sets	Records Read
A.INPTR1, One-dimensional Transport Theory Module-dependent BCD Input	All
GEOM, Geometry Data	All
SP.CICN, Module-independent Data	All
SP.T1OLD, Old One-dimensional Transport Theory Input	All
XS.C.MIN, Macroscopic Composition Cross Sections	Specifications (type 1)
XS.C.ANI, Anisotropic Macroscopic Composition Cross Sections	Specifications (type 1)

Lower-interface Data Sets	Records Written
SP.T1NEW, New One-dimensional Transport Theory Input	All

2. SNIN1D (NUI005) Description of Problem and Method of Solution

a. Introduction

Module-dependent input is accepted in the form of a BCD data set containing card images and/or a binary data set. The input is collected and translated into the binary data set used by the one-dimensional, discrete ordinate transport theory computation module.

The quantities produced by this module are the maximum number of inner and outer iterations, SN order, SN weights and directions and direction cosines, the parameter oscillation damper for criticality searches, and the normalization factor. In addition, density factors for each region or for each mesh interval are specified, as well as the groups which are to be skipped or for which consistent P1 is to be used. The compositions for which anisotropic scattering is defined and the corresponding ℓ numbers are also specified. A diffusion theory approximation, by groups, can be specified.

The processing includes the reading and analysis of BCD card images which define the characteristics mentioned above. The output data set is written to be used by SNARC1D (NUC003) as module-dependent input; it is listed as the lower interface data set in Section 1.

b. Module-Dependent Input Processing

The module processes the following types of module-dependent input: SN order, maximum number of inner and outer iterations, angular flux print option, convergence criterion specification, parameter oscillation damper, and a normalization factor. In addition, the POINTR output specification option and run time for the module may be processed.

Direction weights and cosines other than standard weights and cosines provided by the code may be specified and processed. The ℓ number, density factor, diffusion theory option and group-skipping options are also processed.

The processing consists of putting the module-dependent input into binary form, and writing it on data set SP.T1NEW. The input is provided on the various card types which make up data module A.INPTR1 or SP.T1OLD. The card types which are present must, of course, be consistent with the data set specification, i.e., of correct form, and there must be the proper number of cards of each type. A more complete description of the processing can be found in the subroutine descriptions for this module.

c. Output Edit

The SNIN1D output edit consists of the following displays.

The first display shows the type of solution and type of scattering (isotropic or anisotropic). Geometry type, boundary conditions, maximum number of inner and outer iterations, and SN order are shown. The convergence criterion, parameter oscillation damper, normalization factor, number of energy groups, number of energy groups which upscatter, and number of energy groups which downscatter are given.

The next display is the table of SN constants giving the direction numbers, angle (theta), angle (phi) and the corresponding weights and direction cosines. Given also is the storage allocation.

There are displays showing the following information, if applicable:

1. Composition numbers and corresponding ℓ numbers if there is anisotropic scattering;
2. Density factors, given by interval, if density factors were specified;
3. Groups for which the diffusion theory approximation will be used; and
4. Groups which will be skipped during the iteration process.

3. SNIN1D (NUI005) Description of Module Flow

This section defines the overlay structure of this module and the flow of logic through the subprograms which form the module.

Section a. consists of an overlay structure diagram, showing the ARC System segments and SNIN1D module segments required by this module and their positions in the overlay heirarchy. This is followed by a list of the subprograms located in the SNIN1D module segment, in alphabetical order.

Section b. illustrates the flow of logic through the subprograms of this module, and section c. describes this flow in terms of the module's functions.

a. Overlay Structure Diagram

```
MAIN
BPOINTER
SNIFF
NUI005
```

Subprograms contained in the SNIN1D (NUI005) module segment

NUI005

ARCERR
Block data
DUMPDB
READCD
READ05
READ06
READ78
T1EDIT
ZERCOM

b. Diagrammatic Subprogram Logic Flow

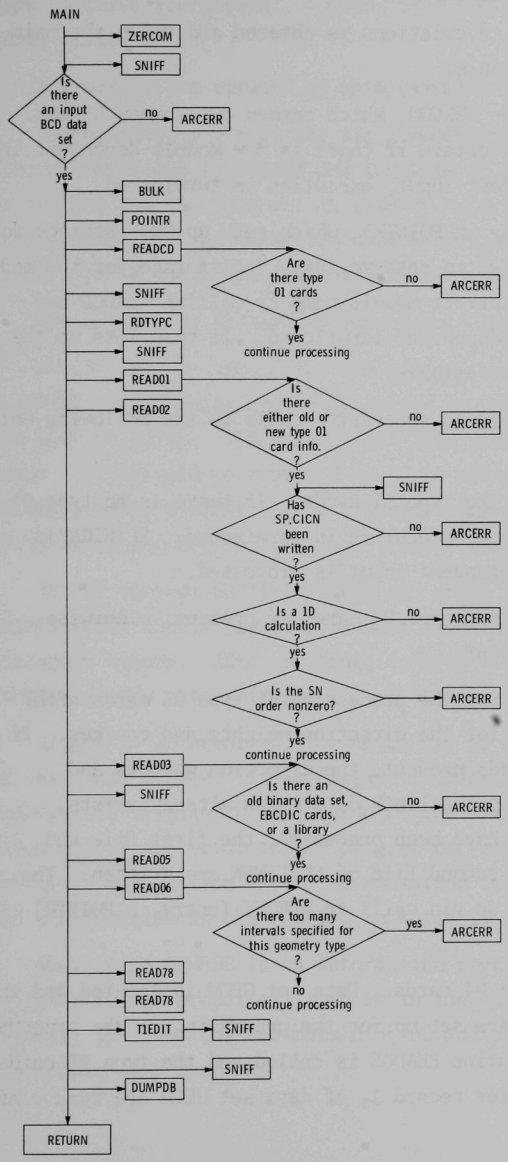

c. Descriptive Subprogram Logic Flow

A path for transport theory calculations is entered and calls the main program, NUI005, of the input module.

NUI005 first calls subroutine ZERCOM, which zeroes out common blocks. It then calls SNIFF† in order to ascertain if there is new module-dependent input. If there is no new module-dependent input, execution is terminated.

NUI005 then calls BULK (entry in POINTR), which sets up bulk storage for the module. It then calls POINTR† to reserve fast core storage for the module. It checks to see if it has the correct module name by calling READCD and reading the first binary module-dependent input card. It then sets up the pointer for the card type counts variable.

NUI005 then enters READCD through successive calls to the following entry points of READCD:

1. READ01, which processes the type 01 cards. If there is no type 01 card information available, execution is terminated. SP.CICN is read and its module-independent input is processed.

2. READ02, which processes the type 02 cards if present; otherwise, it simply returns to NUI005.

3. READ03, which is called for the processing of type 03 cards after arrays have been set up for the direction weights and cosines. If there are no type 03 cards present, the direction weights and cosines are obtained from the Block data which already exists. After the type 03 cards have been processed, the first file and the first record of the second file of SP.T1NEW are written. The arrays are then cleaned up via calls to WIPOUT (entry in POINTR) in NUI005.

NUI005 does not utilize type 04 cards. Data set GEOM is located and the first record is read. Arrays are set up for the processing of the type 05 cards and geometry data. Subroutine READ05 is called and the type 05 cards are processed. The records, after record 1, of data set GEOM are read. After

---

†ARC System module

processing the next record of file 2, data set SP.T1NEW is written. If no type 05 cards are present, control is returned to NUI005 and no processing takes place.

The arrays are cleaned up upon return to NUI005 via calls to WIPOUT.

NUI005 sets up arrays for the processing of type 06 cards and geometry data. Subroutine READ06 is called and the type 06 cards are processed. Data set GEOM is rewound and the data set is read to ascertain the geometry data. The data is processed and the next record of file 2, data set SP.T1NEW, is written. If no type 06 cards are present, control is returned to NUI005.

The arrays are cleaned up upon return to NUI005 via calls to WIPOUT.

NUI005 sets up arrays for the processing of the type 07 and 08 cards of A.INPTR1. Subroutine READ78 is called to process either the type 07 and/or the type 08 cards. The presence of both types of cards causes a terminating error. If no card of types 07 or 08 is present, no processing occurs; however, if one type is present, it is processed and control is returned to NUI005. SP.T1NEW is rewound and the first record rewritten.

NUI005 rewinds SP.T1NEW again and calls subroutine T1EDIT in order to edit the new binary module-dependent input and EBCDIC input for one-dimensional transport theory. After editing, control is returned to NUI005, which returns control to the path driver.

ARCERR is an error routine which can be called from any of the subroutines of the input module. It is called if an execution-time error occurs. Its function is to give an indication of the error which occurred and terminate execution if the error is not program correctable. The error list or subroutine documentation should be consulted to determine the cause of the error and its location in the routine in which it occurred.

Subroutine DUMPDB is an information routine and can be put into execution by insertion of proper calls to it in the various routines. Its purpose is strictly to allow for the obtaining of additional information not provided by the module editing.

4. SNIN1D (NUI005) Subprogram Descriptions

This section contains descriptions of all subprograms which are part of the SNIN1D module. The descriptions appear in alphabetical order by subprogram name.

Each subprogram description begins with a listing of the calling sequence of the subprogram, and of its entry points, if any. Subsection 1 is a list of the arguments of the subprogram and its entry points, in order of appearance, with the type of each argument, its dimensions in the subprogram if it is an array, and its definition or use. The four types of variables used are I*2, denoting an integer halfword (16 bits); I*4, denoting an integer fullword (32 bits); R*4, denoting a floating-point fullword; and R*8, denoting a floating-point doubleword (64 bits). Variables used as array dimensions are defined either as arguments or as members of common blocks.

Subsection 2 contains the names of all common blocks used by the subprogram. Each is followed by a list of the variables actually used from the common block within the subprogram, together with their types and definitions. The dimensions, if any, follow the variable name in parentheses.

Subsection 3 contains a listing of important variables which are local to the subprogram, in a format like that of subsection 2. Subsection 4 describes the functions performed by the subprogram in terms of the overall purpose of the module.

Subsection 5 lists all subprograms called by this subprogram or any of its entry points; subsection 6 lists the subprograms which call this subprogram or any of its entry points.

Subsection 7 describes error messages which can be generated by this subprogram. In this module, all errors are terminating errors.

More detailed explanations of the contents of common blocks, and of the variable-dimensioned arrays stored in the large container array /ARRAY/, can be found in sections 5 and 6. DSRN, used in this section, is an abbreviation of Data Set Reference Number.

Main program NUI005

1. Arguments - None

2. Common Blocks

/ARRAY/

Variables used from this common block

Name	Type	Definition
A (60,000 fast; 120,000 bulk)	R*8	Container array

/LOCATE/

Variables used from this common block

Name	Type	Definition
LSTLOC	I*4	Present location within the container array

/MODNAM/

Variables used from this common block

Name	Type	Definition
DTRINP	R*8	Name of data set SP.T1NEW
DTROLD	R*8	Name of data set SP.T1OLD
DCDINP	R*8	Name of data set A.INPTR1
DGEOM	R*8	Name of data set GEOM

/DSINP/

Variables used from this common block

Name	Type	Definition
NTROLD	I*4	DSRN of SP.T1OLD
NTRINP	I*4	DSRN of SP.T1NEW
NCDINP	I*4	DSRN of A.INPTR1

/NSVAR/

Variables used from this common block

Name	Type	Definition
IH	I*4	Card type
LIM	I*4	Card type count
MAXA	I*4	Container array size

/SVCDI/

Variables used from this common block

Name	Type	Definition
MKRGEO	I*4	Geometry type
NINTI	I*4	Number of I-direction intervals
NINTJ	I*4	Number of J-direction intervals
NUMREG	I*4	Number of regions
NUMCMP	I*4	Number of compositions
EPS	R*8	Convergence criterion
LAREA	I*4	Region-area correspondence flag
LZONE	I*4	Section-zone correspondence flag
NFIN	I*4	Finite geometry type

/SIMVAR/

Variables used from this common block

Name	Type	Definition
MKRDF	I*4	Density factor flag
MKRDTH	I*4	Number of groups for which the diffusion theory option will be used
MKRSKI	I*4	Number of groups to be skipped in the calculation
MKRANS	I*4	Number of anisotropic compositions
MAXII	I*4	Maximum number of inner iterations for all groups
MAXOI	I*4	Maximum number of outer iterations for the problem
NUMDIR	I*4	Number of directions
ISN	I*4	SN order
PAROD	R*8	Parameter oscillation damper
CONNF	R*8	Normalization factor
MKRFLX	I*4	Angular flux print flag
IPTR	I*4	POINTR output flag

/ARNAME/

Variables used from this common block

Name	Type	Definition
DTYPCT	R*8	Name of card type count array
DWGTS	R*8	Name of weight array
DCOSIN	R*8	Name of direction array
DAMANS	R*8	Name of composition array
DCSFC	R*8	Name of density factor array
DMKRDT	R*8	Name of diffusion theory option array

Name	Type	Definition
DMKRSK	R*8	Name of group-skipping option array
DLNOAN	R*8	Name of ℓ number array
DINPRE	R*8	Name of region-to-mesh correspondence array
DCOM	R*8	Name of composition label array
DRE	R*8	Name of region lable array

/MODULE/

Variables used from this common block

Name	Type	Definition
MODULE	I*4	'NUI005'

3. Local Variables

Name	Type	Definition
N1	I*4	Length of array DMKRSK and DMKRDT

4. Functions and tasks performed by this program

This program is the driver for the ARC System one-dimensional transport theory module-dependent input module.

5. Subprograms called by this program

ZERCOM
SNIFF (ARC System module)
POINTR (ARC System module)
READCD
PUTPNT (entry in POINTR)
GETPNT (entry in POINTR)
RDTYPC
READO1 (entry in READCD)
READO2 (entry in READCD)
READO3 (entry in READCD)
WIPOUT (entry in POINTR)
READO5
READO6
READ78
T1EDIT
ARCERR

6. Subprograms calling this program

STP002 standard path and other paths including 1-D transport problems

7. Error messages generated by this program

ERROR IN MODULE NUI005 - nnnn

where - nnnn is

Message Number	Reason
-1001	There is no input BCD data set A.INPTR1.
-1014	There are card type numbers greater than 08 in A.INPTR1. This is not allowed.
-1015	You have specified both group skipping and diffusion theory on types 07 and 08 cards of A.INPTR1. This is not allowed
-1018	An error has been encountered in POINTR. Not enough space is available in A for array DTYPCT.
-1019	An error has been encountered in POINTR. Not enough space is available in A for array DWGTS.
-1020	An error has been encountered in POINTR. Not enough space is available in A for array DCOSIN.
-1023	An error has been encountered in POINTR. Not enough space is available in A for array DAMANS.
-1024	An error has been encountered in POINTR. Not enough space is available in A for array DLNOAN.
-1025	An error has been encountered in POINTR. Not enough space is available in A for array DMKRDT.
-1026	An error has been encountered in POINTR. Not enough space is available in A for array DMKRSK.
-1027	Card type count indicates that there are type 04 cards in A.INPTR1. Type 04 cards are not allowed.
-1029	An error has been encountered in POINTR. Not enough space is available in A for array DRE.
-1030	An error has been encountered in POINTR. Not enough space is available in A for array DCOM.

Message Number	Reason
-1031	An error has been encountered in POINTR. Not enough space is available in A for array DCSCFC.
-1032	An error has been encountered in POINTR. Not enough space is available in A for array DINPRE.
-1033	An error has been encountered in POINTR. Not enough space is available in A for array DRE.
-1034	Unexpected end-of-file on GEOM (record 1).
-1035	Error in reading GEOM (record 1).
-1999	No GEOM data set supplied.

Subroutine ARCERR (NOERR)

1. Arguments

Name	Type	Dimension	Definition
NOERR	I*4	--	Error message number

2. Common Blocks

/MODULE/

Variables used from this common block

Name	Type	Definition
MODULE	R*8	'NUI005'

3. Local Variables - None

4. Functions and tasks performed by this subroutine

This subroutine prints the module name in which an execution time error has been detected and the error code number passed on to this subroutine by the calling program. If the number is negative, execution of this module is terminated.

5. Subprograms called by this subroutine

ABEND (IBM routine)

6. Subprograms calling this subroutine

MAIN PROGRAM NUI005
READCD
READO5
READO6
READ78
T1EDIT

7. Error messages generated by this subroutine - None

Block data for SNIN1D (NUI005)

1. Arguments - None

2. Common Blocks

/MODNAM/

/ARNAME/

/SNLIBR/

3. Local Variables - None

4. Functions and tasks performed by this block data routine

This routine initializes the contents of the common blocks named above and provides the direction weights and cosines for the 1-D transport module. It allows calculations of 1-D transport problems for SN orders of 2, 4, 6, 8, 12, and 16 for slab and spherical geometries. For cylindrical geometries, the SN orders which can be used without additional input are 2, 4, 6, and 8. For higher-order problems, the direction weights and cosines must be supplied through utilization of type 3 cards as module-dependent input (A.INPTR1).

5. Subprograms called by this block data routine - None

6. Subprograms calling this block data routine - None

7. Error messages generated by this block data routine - None

---

Subroutine DUMPDB(L)

1. Arguments

Name	Type	Dimension	Definition
L	I*4	--	Dump number (printed for information)

2. Common Blocks

/ARNAME/

Variables used from this common block

Name	Type	Definition
DTYPCT	R*8	Name of array of the card type count
DWGTS	R*8	Name of array of the direction weights
DCOSIN	R*8	Name of array of the direction cosines
DAMANS	R*8	Name of array of the composition labels for which ℓ numbers are to be specified

Name	Type	Definition
DCSCFC	R*8	Name of array of the density factors by interval
DMKRDT	R*8	Name of array of the diffusion theory markers
DMKRSK	R*8	Name of array of the groups to be skipped
DLNOAN	R*8	Name of array of the ℓ numbers to be defined
DINPRE	R*8	Name of array of the region-to-mesh correspondence
DCOM	R*8	Name of array of the composition labels
DRE	R*8	Name of array of the region labels

/DSINP/

Variables used from this common block

Name	Type	Definition
NTROLD	I*4	Data set reference number of old binary module-dependent input data set, SP.T1OLD
NTRINP	I*4	Data set reference number of new binary module-dependent input data set, SP.T1NEW
NCICN	I*4	Data set reference number of binary module-independent input data set, SP.CICN
NCDINP	I*4	Data set reference number of BCD input data set, A.INPTR1
NGEOM	I*4	Data set reference number of geometry data set, GEOM

/LOCATE/

Variables used from this common block

Name	Type	Definition
LSTLOC	I*4	Present location within the container array
MAXSIZ	I*4	Container array size

/MODNAM/

Variables used from this common block

Name	Type	Definition
DTRMOD	R*8	Incorrect module name
DTRINP	R*8	Name of data set SP.T1NEW
DCICN	R*8	Name of data set SP.CICN
DTROLD	R*8	Name of data set SP.T1OLD
DCDINP	R*8	Name of data set A.INPTR1
DGEOM	R*8	Name of data set GEOM

/NSVAR/

Variables used from this common block

Name	Type	Definition
DNAME	R*8	Module name
IH	I*4	Card type
IERR	I*4	Not used
LIM	I*4	Card type count
MAXA	I*4	Container array size

/SIMVAR/

Variables used from this common block

Name	Type	Definition
MKRDF	I*4	Density factor flag
MKRDTH	I*4	Number of groups for which the diffusion theory option will be used
MKRSKI	I*4	Number of groups to be skipped in the calculation
MKRANS	I*4	Number of anisotropic scattering compositions
MAXII	I*4	Maximum number of inner iterations for all groups

Name	Type	Definition
MAXOI	I*4	Maximum number of outer iterations for the problem
NUMDIR	I*4	Number of directions
ISN	I*4	SN order
PAROD	R*8	Parameter oscillations damper
CONNF	R*8	Normalization factor

/SVCDI/

Variables used from this common block

Name	Type	Definition
IFILL	I*4	Not used
MKRTHY	I*4	Solution type (real or adjoint)
MKRGEO	I*4	Geometry type
NDIMEN	I*4	Number of dimensions
NINTI	I*4	Number of I-direction intervals
NINTJ	I*4	Number of J-direction intervals
NGROUP	I*4	Number of groups
IPROB	I*4	Problem type
NUMREG	I*4	Number of regions
NUMCMP	I*4	Number of compositions
EPS	R*8	Convergence criterion
PAR	R*8	Initial search parameter
PARMOD	R*8	Second search parameter
LAREA	I*4	Length of area definitions (type 6) record of GEOM
LZONE	I*4	Length of zone definitions (type 7) record of GEOM
NFIN	I*4	Finite geometry type

3. Local Variables - None

4. Functions and tasks performed by this subroutine

This subroutine has been left in the module so that the user can obtain information within the program which cannot be obtained through the POINTR dump. It is used by putting the appropriate call within the subroutine that you wish information dumped from.

5. Subprograms called by this subroutine - None

6. Subprograms calling this subroutine - Any in the module

7. Error messages generated by this subroutine - None

Subroutine READCD

Entry Points

```
Entry RDTYPC (TYPCT)
Entry READ01
Entry READ02
Entry READ03 (DIRWGT, DIRMU)
```

1. Arguments

Name	Type	Dimension	Definition
TYPCT	I*4	--	Total card type count
DIRWGT	R*8	NUMDIR	Direction weights
DIRMU	R*8	NUMDIR	Direction cosines

2. Common Blocks

/SNLIBR/

Variables used from this common block

Name	Type	Definition
DSNWCY	R*8	Direction weights for cylindrical geometry
DSNCCY	R*8	Direction cosines for cylindrical geometry

Name	Type	Definition
DWNWSP	R*8	Direction weights for spherical and slab geometries
DSNCSP	R*8	Direction cosines for spherical and slab geometries

/SVCDI/

Variables used from this common block

Name	Type	Definition
MKRTHY	I*4	Solution type (real or adjoint)
MKREGO	I*4	Geometry type
NDIMEN	I*4	Number of dimensions
NINTI	I*4	Number of I-direction intervals
NINTJ	I*4	Number of J-direction intervals
NGROUP	I*4	Number of groups
IPROB	I*4	Problem type
EPS	R*8	Convergence criterion
PAR	R*8	Initial search parameter
PARMOD	R*8	Second search parameter

/MODNAM/

Variables used from this common block

Name	Type	Definition
DTRMOD	R*8	Incorrect module name
DCICN	R*8	Name of data set SP.CICN

/NSVAR/

Variables used from this common block

Name	Type	Definition
DNAME	I*4	Module name

Name	Type	Definition
IH	I*4	Card type
LIM	I*4	Card type count

/DSINP/

Variables used from this common block

Name	Type	Definition
NTROLD	I*4	DSRN of old binary module-dependent input data set, SP.T1OLD
NTRINP	I*4	DSRN of new binary module-dependent input data set, SP.T1NEW
NCICN	I*4	DSRN of binary-module-dependent input data set, SP.CICN
NCDINP	I*4	DSRN of BCD input

/SIMVAR/

Variables used from this common block

Name	Type	Definition
MKRDF	I*4	Density factor flag
MKRDTH	I*4	Number of groups for which diffusion theory option will be used
MKRSKI	I*4	Number of groups to be skipped in the calculation
MKRANS	I*4	Number of anisotropic compositions
MAXII	I*4	Maximum number of inner iterations for all groups
MAXOI	I*4	Maximum number of outer iterations for the problem
NUMDIR	I*4	Number of directions
ISN	I*4	SN order
PAROD	R*8	Parameter oscillation damper
CONNF	R*8	Normalization factor
MKRFLX	I*4	Angular flux print flag
IPTR	I*4	POINTR output flag

3. Local Variables

Name	Type	Definition
DEPS	R*8	Convergence criterion
BLANKS	R*8	Tests for default option for outer and inner iterations, oscillation damper, and normalization factor
K	I*4	Position indicator of first SN constants in the SN library which is to be used
L	I*4	Indicator of the last SN constants to be used in the calculation (K + NUMDIR - 1)
M	I*4	Counter for the direction weights and cosines used from the SN library

4. Functions and tasks performed by this subroutine

This subroutine processes the type 01, 02, and 03 cards of module-dependent input for 1-D transport specification. It reads the first BCD card which BCDDS (ARC System module) has set up. It reads data set SP.CICN, which contains binary simple variables from module-independent input. The routine determines whether the proper number of module-dependent input cards are used. The routine also writes the first record of data set SP.T1NEW, which is the new binary module-dependent input for the 1-D transport computation module. It also writes file 2, record 1.

5. Subprograms called by this subroutine

ARCERR
SNIFF (ARC System module)

6. Subprograms calling this subroutine

Main program NUI005

7. Error messages generated by this subroutine

ERROR IN MODULE NUI005 - nnnn

where - nnnn is

Message Number	Reason
-2001	The first BCD card has wrong data set name; it should be A.INPTR1.
-2002	There is neither old nor new type 01 card information.
-2003	Data set SP.CICN has not been written.
-2004	You have specified other than a 1-D calculation in SP.CICN.
-2005	You have not specified the SN order on card type 01 in A.INPTR1.
-2007	Both A.INPTR1 and SP.T1OLD exist, and this module does not know which should be used.
-2008	You do not have a correct number of type 03 cards in A.INPTR1 or SP.T1OLD; there must be one and only one for each direction defined.
-2010	There is no old binary data set SP.T1OLD and you have specified that there should be one. The type 01 card cannot be read.
-2011	There are no type 01 cards in either A.INPTR1 or SP.T1OLD.
-2012	There is old binary data set SP.T1OLD and you have specified that there is one. The type 03 cards cannot be read.
-2013	Unexpected end-of-file in A.INPTR1 (second BCDDS record).
-2014	Error in reading A.INPTR1 (second BCDDS record).
-2015	Unexpected end-of-file in A.INPTR1 (first BCDDS record).
-2016	Error in reading A.INPTR1 (first BCDDS record).
-2017	Unexpected end-of-file in A.INPTR1 (card type 01).
-2018	Error in reading A.INPTR1 (card type 01).
-2019	Unexpected end-of-file in A.INPTR1 (card type 01 alphanumeric read).
-2020	Error in reading A.INPTR1 (card type 01 alphanumeric read).
-2021	Unexpected end-of-file in A.INPTR1 (second BCDDS record).

Message Number	Reason
-2022	Error in reading A.INPTR1 (second BCDDS record).
-2024	Error in reading SP.T1OLD (first BCDDS record).
-2025	Unexpected end-of-file in data set SP.CICN (record 1).
-2026	Error in reading SP.CICN (record 1).
-2027	Unexpected end-of-file in A.INPTR1 (type 03 cards when SP.T1OLD is present).
-2028	Error in reading A.INPTR1 (type 03 cards when SP.T1OLD is present).
-2029	Unexpected end-of-file in SP.T1OLD (type 03 cards).
-2030	Error in reading SP.T1OLD (type 03 cards).
-2031	Unexpected end-of-file in A.INPTR1 (type 03 cards).
-2033	Convergence criterion specified both in A.INPTR1 and on type 21 card of A.NIP, or specified in neither place. It should be specified once and only once.
-2034	Same as -2033.
-2035	As SN order greater than that available from the SN library has been specified, and no type 03 cards are present in A.INPTR1 or SP.T1OLD.

Subroutine READO5 (NAMANS, LNOANS, REG, COMP)

1. Arguments

Name	Type	Dimension	Definition
NAMANS	I*4	--	Composition label for which an ℓ number is to be specified
LNOANS	I*4	--	ℓ number to be defined for a composition
REG	R*8	NUMREG	Region labels
COMP	R*8	NUMCMP	Composition labels

2. Common Blocks

/NSVAR/

Variables used from this common block

Name	Type	Definition
LIM	I*4	Card type count

/SVCDI/

Variables used from this common block

Name	Type	Definition
NUMREG	I*4	Number of regions
NUMCMP	I*4	Number of compositions
LAREA	I*4	Region-area correspondence flag
LZONE	I*4	Section-zone correspondence flag
NFIN	I*4	Finite geometry type

/DSINP/

Variables used from this common block

Name	Type	Definition
NTROLD	I*4	DSRN of old binary module-dependent input data set, SP.T1OLD
NTRINP	I*4	DSRN of new binary module-dependent input data set, SP.T1NEW
NCDINP	I*4	DSRN of BCD input data set, A.INPTR1
NGEOM	I*4	DSRN of geometry data set, GEOM

3. Local Variables

Name	Type	Definition
CMPLBL	R*8	Composition label

4. Functions and tasks performed by this subroutine

This subroutine processes the type 05 cards of module-dependent input for 1-D transport specification. It reads and stores the composition number of compositions which have anisotropic scattering and their numbers from the type 05 cards. The subroutine reads data set GEOM and compares composition labels from GEOM with composition labels given in the module-dependent input. The subroutine writes record 2 of file 2 in data set SP.T1NEW.

5. Subprograms called by this subroutine

SQUEZE (ARC System module)
ARCERR

6. Subprograms calling this subroutine

Main program NUI005

7. Error messages generated by this subroutine

ERROR IN MODULE NUI005 - nnnn

where - nnnn is

Message Number	Reason
-3001	Unexpected end-of-file in A.INPTR1 (type 05 cards for delete option).
-3002	Error in reading A.INPTR1 (type 05 cards for delete option).
-3003	Unexpected end-of-file in SP.T1OLD (type 05 cards).
-3004	Error in reading SP.T1OLD (type 05 cards).
-3005	Unexpected end-of-file in GEOM (record type 9).
-3006	Error in reading GEOM (record type 9).
-3007	Unexpected end-of-file in A.INPTR1 (type 05 cards).
-3008	Error in reading A.INPTR1 (type 05 cards).
-3010	The composition labels from GEOM and those from A.INPTR1 do not match.

Subroutine READ06 (CSCFAC, INPREG, REG)

1. Arguments

Name	Type	Dimension	Definition
CSCFAC	R*8	NINTI	Density factor for the Ith interval
INPREG	I*4	NINTI	Region-to-mesh correspondence
REG	R*8	NUMREG	Region labels

2. Common Blocks

/DSINP/

Variables used from this common block

Name	Type	Definition
NTROLD	I*4	DSRN of old binary module-dependent input data set, SP.T1OLD
NTRINP	I*4	DSRN of new binary module-dependent input data set, SP.T1NEW
NCICN	I*4	DSRN of binary module-independent input data set, SP.CICN
NCDINP	I*4	DSRN of BCD input data set, A.INPTR1
NGEOM	I*4	DSRN of geometry data set, GEOM

/NSVAR/

Variables used from this common block

Name	Type	Definition
LIM	I*4	Card type count

/SVCDI/

Variables used from this common block

Name	Type	Definition
NINTI	I*4	Number of I-direction intervals
NUMREG	I*4	Number of regions
LAREA	I*4	Region-area correspondence flag
LZONE	I*4	Section-zone correspondence flag
NFIN	I*4	Finite geometry type

/SIMVAR/

Variables used from this common block

Name	Type	Definition
MKRDF	I*4	Density factor flag

3. Local Variables

Name	Type	Definition
K1	I*4	1
K3	I*4	K1 + 4
K2	I*4	Minimum of K3 and the number of intervals
CSCFCC	R*8	Dummy variable for group cross section factor
REGLBL	R*8	Region label

4. Functions and tasks performed by this subroutine

This subroutine processes the type 06 cards of module-dependent input for 1-D transport specification. It reads and stores the density factors by interval from the type 06 cards. It determines the region number and interval for this card type and assigns density factors. This is done utilizing the information obtained from reading data set GEOM and making the appropriate comparisons. The routine writes record 3, file 2 of data set SP.T1NEW.

5. Subprograms called by this subroutine

ARCERR

6. Subprograms calling this subroutine

Main program NUI005

7. Error messages generated by this subroutine

ERROR IN MODULE NUI005 - nnnn

where - nnnn is

Message Number	Reason
-6001	Unexpected end-of-file in A.INPTR1 (card type 06).
-6002	Error in reading A.INPTR1 (card type 06).
-6003	Unexpected end-of-file in SP.T1OLD (card type 06).
-6004	Error in reading SP.T1OLD (card type 06).
-6007	There are too many density factors by interval specified in A.INPTR1 on type 06 cards for the number of intervals defined in GEOM.
-6008	No old binary data set SP.T1OLD exists, and one has been specified. The type 06 cards cannot be read.
-6009	The region labels on A.INPTR1 type 06 cards do not correspond to those defined in GEOM.
-6010	Unexpected end-of-file in A.INPTR1 (card type 06).
-6011	Error in A.INPTR1 (card type 06).
-6012	Unexpected end-of-file in GEOM (record 3).
-6013	Error in GEOM (record 3).
-6014	Unexpected end-of-file in GEOM (record 9).
-6015	Error in GEOM (record 9).
-6016	Unexpected end-of-file in A.INPTR1 (card type 06).
-6017	Error in A.INPTR1 (card type 06).
-6018	There are too many density factors by interval specified in A.INPTR1 on type 06 cards for the number of intervals defined in GEOM.

Subroutine READ78 (MKRDT, MKRDTH)

1. Arguments

Name	Type	Dimension	Definition
MKRDT	I*4	23*LIM	Diffusion theory option array
MKRDTH	I*4	--	Diffusion theory marker

2. Common Blocks

/NSVAR/

Variables used from this common block

Name	Type	Definition
LIM	I*4	Card type count

/DSINP/

Variables used from this common block

Name	Type	Definition
NTROLD	I*4	DSRN of old binary module-dependent input data set, SP.T1OLD
NTRINP	I*4	DSRN of new binary module-dependent input data set, SP.T1NEW
NCDINP	I*4	DSRN of BCD input data set, A.INPTR1

3. Local Variables - None

4. Functions and tasks performed by this subroutine

This subroutine processes the type 07 and 08 cards of module-dependent input for 1-D transport specifications. It determines the groups for which diffusion theory approximations will be used. It also determines if certain groups are to be skipped during the calculations. (Both the diffusion theory option and group-skipping option cannot be used at the same time.) The routine also writes logical record 4 and logical record 5, file 2, of data set SP.T1NEW.

5. Subprograms called by this subroutine

ARCERR

6. Subprograms calling this subroutine

Main Program NUI005

7. Error messages generated by this subroutine

ERROR IN MODULE NUI005 - nnnn

where - nnnn is

Message Number	Reason
-5001	Unexpected end-of-file in A.INPTR1 (card type 07).
-5002	Error in reading A.INPTR1 (card type 07).
-5003	Unexpected end-of-file in SP.T1OLD (card type 07).
-5004	Error in reading SP.T1OLD (card type 07).

Subroutine T1EDIT

1. Arguments - None

2. Common Blocks

/ARRAY/

Variables used from this common block

Name	Type	Definition
A (60,000 fast; 120,000 bulk)	R*8	Container array (equivalenced IA)

/MODNAM/

Variables used from this common block

Name	Type	Definition
DXSCMN	R*8	Name of data set XS.C.MIN

/DSINP/

Variables used from this common block

Name	Type	Definition
NTRINP	I*4	DSRN of new binary module-dependent input data set, SP.T1NEW
NCDINP	I*4	DSRN of BCD input data set, A.INPTR1
NXSCMN	I*4	DSRN of XS.C.MIN

/SVCDI/

Variables used from this common block

Name	Type	Definition
NINTI	I*4	Number of I-direction intervals
NGROUP	I*4	Number of groups
NUMCMP	I*4	Number of compositions
EPS	R*8	Convergence criterion

/SIMVAR/

Variables used from this common block

Name	Type	Definition
MKRDF	I*4	Density factor flag
MKRDTH	I*4	Number of groups for which the diffusion theory option will be used
MKRSKI	I*4	Number of groups to be skipped in the calculation
MKRANS	I*4	Number of anisotropic compositions

Name	Type	Definition
MAXII	I*4	Maximum number of inner iterations for all groups
MAXOI	I*4	Maximum number of outer iterations for the problem
NUMDIR	I*4	Number of directions
ISN	I*4	SN order
PAROD	R*8	Parameter oscillation damper
CONNF	R*8	Normalization factor
MKRFLX	I*4	Angular flux print flag
IPTR	I*4	POINTR output flag

/PMW/

Variables used from this common block

Name	Type	Definition
NFCMP	I*4	Number of fissionable compositions
NFAM	I*4	Number of families of delayed neutrons
MAXUP	I*4	Maximum number of upscattering groups
MAXDN	I*4	Maximum number of downscattering groups
MKRSET	I*4	Fission spectrum flag

3. Local Variables

Name	Type	Definition
TEMP1	R*8	Angle THETA } For editing purposes
TEMP2	R*8	Angle PHI } For editing purposes
RECORD	R*8	Card images of BCD input for 1-D transport input module

4. Functions and tasks performed by this subroutine

This subroutine edits the new binary code-dependent input and EBCDIC input for 1-D transport theory.

5. Subprograms called by this subroutine

ARCERR

6. Subprograms calling this subroutine

Main program NUI005

7. Error messages generated by this subroutine

ERROR IN MODULE NUI005 - nnnn

where - nnnn is

Message Number	Reason
-111	Unexpected end-of-file in SP.T1NEW or XS.C.MIN (file 1).
-1111	Error in reading SP.T1NEW (file 1) or XS.C.MIN (file 1).
-222	Unexpected end-of-file in SP.T1NEW (file 2, record 1).
-2222	Error in reading SP.T1NEW (file 2, record 1).
-333	Unexpected end-of-file in SP.T1NEW (file 2, record 2).
-3333	Error in reading SP.T1NEW (file 2, record 2).
-444	Unexpected end-of-file in SP.T1NEW (file 2, record 3).
-4444	Error in reading SP.T1NEW (file 2, record 3).
-555	Unexpected end-of-file in SP.T1NEW (file 2, record 4).
-5555	Error in reading SP.T1NEW (file 2, record 4).
-5598	Buckling search was specified. This is not allowed.
-5599	Error in reading SP.T1NEW (file 1, for end-of-file mark).
-5600	No end-of-file for data set SP.T1NEW (file 1).

Message Number	Reason
-666	Unexpected end-of-file in SP.T1NEW (file 1, record 5).
-6666	Error in reading SP.T1NEW (file 1, record 5).
-3000	Error in reading A.INPTR1 card images.

Subroutine ZERCOM

1. Arguments - None

2. Common Blocks

/LOCATE/

Variables used from this common block

Name	Type	Definition
I1(2)	I*4	Dummy variable used for zeroing out the locations in core, corresponding to the names listed in the common blocks

/DSINP/

Variables used from this common block

Name	Type	Definition
I2(5)	I*4	Dummy variable used for zeroing out the locations in core, corresponding to the names listed in the common blocks

/NSVAR/

Variables used from this common block

Name	Type	Definition
D3	R*8	Dummy variable used for zeroing out the locations in core, corresponding to the names listed in the common blocks

Name	Type	Definition
I3(4)	I*4	Dummy variable used for zeroing out the locations in core, corresponding to the names listed in the common blocks

/SVCDI/

Variables used from this common block

Name	Type	Definition
IFILL(9)	I*4	Not used
I4(3)	I*4	Dummy variable used for zeroing out the locations in core, corresponding to the names listed in the common blocks
D1(3)	R*8	Dummy variable used for zeroing out the locations in core, corresponding to the names listed in the common blocks
I6(3)	I*4	Dummy variable used for zeroing out the locations in core, corresponding to the names listed in the common blocks

/SIMVAR/

Variables used from this common block

Name	Type	Definition
I5(8)	I*4	Dummy variable used for zeroing out the locations in core, corresponding to the names listed in the common blocks
D2(2)	R*8	Dummy variable used for zeroing out the locations in core, corresponding to the names listed in the common blocks
MKRFLX	I*4	Angular flux print-out flag
IPTR	I*4	POINTR output flag

3. Local Variables - None

4. Functions and tasks performed by this subroutine

This subroutine zeroes out common blocks.

5. Subprograms called by this subroutine - None

6. Subprograms calling this subroutine

Main program NUI005

7. Error messages generated by this subroutine - None

5. SNIN1D (NUI005) Common Block Descriptions

This section provides more detailed information about the common blocks used by the SNIN1D subprograms. The common blocks appear in alphabetical order by name.

For each common block, all variables are listed in order of appearance in the block by name and type, and the definition of each is given. In addition, there appears for each variable a list of the subprograms in which the value of the variable is set or altered.

A special case is the /ARRAY/ common block, which contains the container array A used by the dynamic storage allocation module POINTR (see ANL-7711 of this series). Section 6 contains a list of the names of all arrays which may be defined in the container array at any point in the execution of the module.

/ARNAME/

Name	Type	Subprograms where values are set or modified	Definition
DTYPCT	R*8	Main	Name of array of the card type count
DWGTS	R*8	Main	Name of array of the direction weights
DCOSIN	R*8	Main	Name of array of the direction cosines
DAMANS	R*8	Main	Name of array of the composition labels for which ℓ numbers are to be specified
DCSCFC	R*8	Main	Name of array of the density factors by interval
DMKRDT	R*8	Main	Name of array of the diffusion theory markers
DMKRSK	R*8	Main	Name of array of the groups to be skipped
DLNOAN	R*8	Main	Name of array of the ℓ numbers to be defined
DINPRE	R*8	Main	Name of array of the region-to-mesh correspondence
DCOM	R*8	Main	Name of array of the composition labels
DRE	R*8	Main	Name of array of the region labels

/ARRAY/

Name	Type	Subprograms where values are set or modified	Definition
A	R*8	Main	Container array

/DSINP/

Name	Type	Subprograms where values are set or modified	Definition
NTROLD	I*4	Main	Data set reference number of old binary module-dependent input data set, SP.T1OLD
NTRINP	I*4	Main	Data set reference number of new binary module-dependent data set, SP.T1NEW
NCICN	I*4	READCD	Data set reference number of binary module-independent data set, SP.CICN
NCDINP	I*4	Main	Data set reference number of BCD input data set, A.INPTR1
NGEOM	I*4	Main	Data set reference number of geometry data set, GEOM

/LOCATE/

Name	Type	Subprograms where values are set or modified	Definition
LSTLOC	I*4	DUMPDB	Present location within the container array
MAXSIZ	I*4	DUMPDB	Container array size

/MODNAM/

Name	Type	Subprograms where values are set or modified	Definition
DTRMOD	R*8	Main	Incorrect module name
DTRINP	R*8	Main	Name of data set SP.T1NEW
DCICN	R*8	Main	Name of data set SP.CICN
DTROLD	R*8	Main	Name of data set SP.T1OLD

Name	Type	Subprograms where values are set or modified	Definition
DCDINP	R*8	Main	Name of data set A.INPTR1
DGEOM	R*8	Main	Name of data set GEOM
DXSCMN	R*8	T1EDIT	Name of data set XS.C.MIN

/MODULE/

Name	Type	Subprograms where values are set or modified	Definition
MODULE	R*8	Main	'NUI005'

/NSVAR/

Name	Type	Subprograms where values are set or modified	Definition
DNAME	R*8	Main	Module name
IH	I*4	Main	Card type
IERR	I*4	Main	Not used
LIM	I*4	Main	Card type count
MAXA	I*4	Main	Container array size

/PMW/

Name	Type	Subprograms where values are set or modified	Definition
NFCMP	I*4	T1EDIT	Number of fissionable compositions
NFAM	I*4	T1EDIT	Number of families of delayed neutrons
MAXUP	I*4	T1EDIT	Maximum number of upscattering groups

Name	Type	Subprograms where values are set or modified	Definition
MAXDN	I*4	T1EDIT	Maximum number of downscattering groups
MKRSET	I*4	T1EDIT	Fission spectrum flag

/SIMVAR/

Name	Type	Subprograms where values are set or modified	Definition
MKRDF	I*4	Main READCD READ06	Density factor flag
MKRDTH	I*4	Main READCD READ78	Number of groups for which the diffusion theory option will be used
MKRSKI	I*4	Main READCD	Number of groups to be skipped in the calculation
MKRANS	I*4	Main READCD	Number of anisotropic scattering compositions
MAXII	I*4	Main READCD	Maximum number of inner iterations for all groups
MAXOI	I*4	Main READCD	Maximum number of outer iterations for the problem
NUMDIR	I*4	Main READCD	Number of directions
ISN	I*4	Main READCD	SN order
PAROD	R*8	Main READCD	Parameter oscillation damper
CONNF	R*8	Main READCD	Normalization factor

Name	Type	Subprograms where values are set or modified	Definition
MKRFLX	I*4	Main READCD	Angular flux print-out flag
IPTR	I*4	Main READCD	POINTR output flag
TIFAC	R*4	Main	Time factor for module

/SNLIBR/

Name	Type	Subprograms where values are set or modified	Definition
DSNWCY	R*8	READCD	Direction weights for cylindrical geometry
DSNCCY	R*8	Block data READCD	Direction cosines for cylindrical geometry
DSNWSP	R*8	Block data READCD	Direction weights for spherical and slab geometries
DSNCSP	R*8	Block data READCD	Direction cosines for spherical and slab geometries

/SVCDI/

Name	Type	Subprograms where values are set or modified	Definition
IFILL	I*4	Main	Not used
MKRTHY	I*4	Main READCD	Solution type
MKRGEO	I*4	Main READCD	Geometry type
NDIMEN	I*4	Main READCD	Number of dimensions

Name	Type	Subprograms where values are set or modified	Definition
NINTI	I*4	Main READCD	Number of I-direction intervals
NINTJ	I*4	Main READCD	Number of J-direction intervals
NGROUP	I*4	Main READCD T1EDIT	Number of groups
IPROB	I*4	Main READCD	Problem type
NUMREG	I*4	Main	Number of regions
NUMCMP	I*4	Main T1EDIT	Number of compositions
EPS	R*8	Main READCD T1EDIT	Convergence criterion
PAR	R*8	Main READCD	Initial search parameter
PARMOD	R*8	Main READCD	Second search parameter
LAREA	I*4	Main	Region-area correspondence flag
LZONE	I*4	Main	Section-zone correspondence flag
NFIN	I*4	Main	Finite geometry type

6. SNIN1D (NUI005) Dynamic Storage Array Allocation

This section describes all arrays which may be defined by this module in common block /ARRAY/ A, using the facilities of the dynamic storage allocation module POINTR (see Volume I). The arrays are listed in alphabetical order by the name given them in the POINTR name table, followed in parentheses by the name of the variable which contains the array name.

The following information is given for each array:

1. Type
2. Dimension, in terms of module variables
3. Names of subprograms where action is taken that affects the status of the array in the container, followed in parentheses by the action that is taken in the subprogram. (Here, significant POINTR calls are generally PUTPNT, which allocates space in the container for the array; REDEF, which sets aside space if the array is not present or redefines its space allocation if it is; and WIPOUT, which removes the array from the name table, thus making it inaccessible. The meaning of any other POINTR calls listed can be found in the POINTR documentation.)
4. Names of subprograms in which the value of elements of the array are set or altered
5. The definition of the array contents.

If the meaning of a variable used as the dimension of an array is not known, it can be found in the subprogram in which a call to PUTPNT or REDEF is made for that array.

Array Name	Type	Dimension	Subprograms issuing significant POINTR calls	Subprograms where values are set or modified	Definition
COMP (DCOM)	R*8	NUMCMP	Main (PUTPNT) (WIPOUT)	READ05	Composition labels, from GEOM
CSCFAC (DCSCFC)	R*8	NINTI	Main (PUTPNT) (WIPOUT)	READ06	Density factors from A.INPTR1 or SP.T1OLD
DIRMU (DCOSIN)	R*8	NUMDIR	Main (PUTPNT) (WIPOUT)	Block data READ03 (entry in READCD)	Direction cosines, either set or read from A.INPTR1 or SP.T1OLD
DIRWGT (DWGTS)	R*8	NUMDIR	Main (PUTPNT) (WIPOUT)	Block data READ03 (entry in READCD)	Direction weights, either set or read from A.INPTR1 or SP.T1OLD
INPREG (DINPRE)	I*4	NINTI	Main (PUTPNT) (WIPOUT)	READ06	Region-to-mesh interval correspondence, from GEOM
LNOANS (DLNOAN)	I*4	LIM	Main (PUTPNT) (WIPOUT)	READ05	ℓ numbers, from A.INPTR1 or SP.T1OLD
MKRDTH (DMKRDT)	I*4	23*LIM	Main (PUTPNT) (WIPOUT)	READ78	Diffusion theory option, from A.INPTR1 or SP.T1OLD
MKRSKP (DMKRSK)	I*4	23*LIM	Main (PUTPNT) (WIPOUT)	READ78	Group skipping option, from A.INPTR1 or SP.T1OLD

Array Name	Type	Dimension	Subprograms issuing significant POINTR calls	Subprograms where values are set or modified	Definition
NAMANS (DAMANS)	I*4	LIM	Main (PUTPNT)	READ05	Composition label associated with ℓ numbers, from A.INPTR1 or SP.T1OLD
REG (DRE)	R*8	NUMREG	Main (PUTPNT) (WIPOUT)	READ05 READ06	Region labels, from GEOM
TYPCT (DTYPCT)	I*4	IH	Main (PUTPNT)	Main RDTYPC	Card type count for A.INPTR1

7. SNIN1D (NUI005) Data Set Usage

This section contains descriptions of all data sets used by this module. For each data set used, the following information is given:

1. the name of the data set, if it is an ARC System data set, or a description of its contents and function if it is a scratch data set used only within the module;
2. the record structure of the data set, if it is a scratch data set;
3. names of subprograms in which the data set is read and/or written, along with a list of the record types which are read and/or written and the name of the variable containing the data set reference number.

A complete description of the record structure and contents of each ARC System data set can be found in ANL-7711 of this series.

Name or description of data set - A.INPTR1, One-dimensional Transport Theory Module-dependent BCD Input

Record structure - ARC System data set

Read in subprograms	Card types	Reference variable
READCD	All of BCDDS specification records	NCDINP
READ01 (entry in READCD)	One of Specifications (type 01)	
READ02 (entry in READCD)	One of Output Specifications (type 02)	
READ03 (entry in READCD)	All of Discrete Ordinate Specifications (type 03)	
READ05	All of Anisotropy Specifications (type 05)	
READ06	All of Density Factor Specifications (type 06)	
READ78	All of Diffusion Theory Option Specifications (type 07) or Group-skipping Option Specifications (type 08)	

Written in subprograms - None

Name or description of data set - GEOM, Geometry Data

Record structure - ARC System data set

Read in subprograms	Record types	Reference variable
MAIN	One of Specifications (type 1)	NGEOM
READ05	One each of whichever record types 2-9 are present	
READ06	One each of whichever record types 1-9 are present	

Written in subprograms - None

Name or description of data set - SP.CICN, Module-independent Data

Record structure - ARC System data set

Read in subprograms	Record types	Reference variable
READCD	One of Specifications (type 1)	NCICN

Written in subprograms - None

Name or description of data set - SP.T1NEW, New One-dimensional Transport Theory Input

Record structure - ARC System data set

Read in subprograms	Record types	Reference variable
T1EDIT	All present after writing	NTRINP

Written in subprograms	Record types	Reference variable
MAIN	One of Specifications (type 1 of file 1)	NTRINP
READ03 (entry in READCD)	End-of-file and one record of Discrete Ordinate Specifications (type 1 of file 2)	
READ05	One of Anisotropy Specifications (type 2 of file 2) if present	
READ06	One of Density Factor Specifications (type 3 of file 2) if present	
READ78	One of Diffusion Theory Option Specifications (type 4 of file 2) or Group Skipping Option Specifications (type 5 of file 2) if present	

Name or description of data set - SP.T1OLD, Old One-dimensional Transport Theory Input

Record structure - Same as that of A.INPTR1. This data set contains old BCD input for the 1-D transport specification module.

Read in subprograms	Record types	Reference variable
READ01 (entry in READCD)	One of Specifications (type 01)	NCDINP
READ02 (entry in READCD)	One of Output Specifications (type 02)	
READ03 (entry in READCD)	All of Discrete Ordinate Specifications (type 03)	
READ05	All of Anisotropy Specifications (type 05)	
READ06	All of Density Factor Specifications (type 06)	
READ78	All of Diffusion Theory Option Specifications (type 07) or Group-skipping Option Specifications (type 08)	

Written in subprograms - None

Name or description of data set - XS.C.MIN, Macroscopic Composition Cross-sections

Record structure - ARC System data set

Read in subprograms	Record types	Reference variable
T1EDIT	One of Specifications (type 1 of file 1)	NXSCMN

Written in subprograms - None

Name or description of data set - XS.C.ANI, Anisotropic, Macroscopic Composition, Cross-section Data

Record structure - ARC System data set

Read in subprograms	Record types	Reference variable
T1EDIT	One of Specifications (type 1 of file 1)	NUM

Written in subprograms - None

8. SNIN1D (NUI005) Error Messages

This section lists the error messages generated by SNIN1D in numerical order, along with a statement of the cause of the error and the name of the subprogram in which each occurs.

Each error message is of the form:

ERROR IN MODULE NUI005 - nnnn,

where - nnnn is the error number. All errors in this module are terminating errors.

Message number	Reason	Subprogram where issued
-111	Unexpected end-of-file in SP.T1NEW or XS.C.MIN (file 1).	T1EDIT
-222	Unexpected end-of-file in SP.T1NEW (file 2, record 1).	T1EDIT
-333	Unexpected end-of-file in SP.T1NEW (file 2, record 2).	T1EDIT
-444	Unexpected end-of-file in SP.T1NEW (file 2, record 3).	T1EDIT
-555	Unexpected end-of-file in SP.T1NEW (file 2, record 4).	T1EDIT
-666	Unexpected end-of-file in SP.T1NEW (file 2, record 5).	T1EDIT
-1001	There is no input BCD data set A.INPTR1.	Main
-1014	There are card type numbers greater than 08 in A.INPTR1. This is not allowed.	Main
-1015	You have specified both group skipping and diffusion theory on types 07 and 08 cards of A.INPTR1. This is not allowed.	Main
-1018	An error has been encountered in POINTR. Not enough space is available in A for array DTYPCT.	Main
-1019	An error has been encountered in POINTR. Not enough space is available in A for array DWGTS.	Main
-1020	An error has been encountered in POINTR. Not enough space is available in A for array DCOSIN.	Main
-1023	An error has been encountered in POINTR. Not enough space is available in A for array DAMANS.	Main
-1024	An error has been encountered in POINTR. Not enough space is available in A for array DLNOAN.	Main
-1025	An error has been encountered in POINTR. Not enough space is available in A for array DMKRDT.	Main
-1026	An error has been encountered in POINTR. Not enough space is available in A for array DMKRSK.	Main
-1027	Card type count indicates that there are type 04 cards in A.INPTR1. Type 04 cards are not allowed.	Main

Message number	Reason	Subprogram where issued
-1029	An error has been encountered in POINTR. Not enough space is available in A for array DRE.	Main
-1030	An error has been encountered in POINTR. Not enough space is available in A for array DCOM.	Main
-1031	An error has been encountered in POINTR. Not enough space is available in A for array DCSCFC.	Main
-1032	An error has been encountered in POINTR. Not enough space is available in A for array DINPRE.	Main
-1033	An error has been encountered in POINTR. Not enough space is available in A for array DRE.	Main
-1034	Unexpected end-of-file on GEOM (record 1)	Main
-1035	Error in reading GEOM (record 1)	Main
-1111	Error in reading SP.T1NEW (file 1) or XS.C.MIN (file 1).	T1EDIT
-1999	No GEOM data set supplied.	Main
-2001	The first BCD card has wrong data set name; it should be A.INPTR1.	READCD
-2002	There is neither old nor new type 01 card information.	READCD
-2003	Data set SP.CICN has not been written.	READCD
-2004	You have specified other than a 1-D calculation in SP.CICN.	READCD
-2005	You have not specified the SN order on card type 01 in A.INPTR1.	READCD
-2007	Both A.INPTR1 and SP.T1OLD exist, and this module does not know which should be used.	READCD
-2008	You do not have a correct number of type 03 cards in A.INPTR1 or SP.T1OLD; there must be one and only one for each direction defined.	READCD
-2010	There is no old binary data set SP.T1OLD and you have specified that there should be one. The type 01 card cannot be read.	READCD
-2011	There are no type 01 cards in either A.INPTR1 or SP.T1OLD.	READCD

Message number	Reason	Subprogram where issued
-2012	There is no old binary data set SP.T1OLD and you have specified that there is one. The type 03 cards cannot be read.	READCD
-2013	Unexpected end-of-file in A.INPTR1 (second BCDDS record).	READCD
-2014	Error in reading A.INPTR1 (second BCDDS record).	READCD
-2015	Unexpected end-of-file in A.INPTR1 (first BCDDS record).	READCD
-2016	Error in reading A.INPTR1 (first BCDDS record).	READCD
-2017	Unexpected end-of-file in A.INPTR1 (card type 01).	READCD
-2018	Error in reading A.INPTR1 (card type 01).	READCD
-2019	Unexpected end-of-file in A.INPTR1 (card type 01 alphanumeric read).	READCD
-2020	Error in reading A.INPTR1 (card type 01 alphanumeric read).	READCD
-2021	Unexpected end-of-file in A.INPTR1 (second BCDDS record).	READCD
-2022	Error in reading A.INPTR1 (second BCDDS record).	READCD
-2024	Error in reading SP.T1OLD (first BCDDS record).	READCD
-2025	Unexpected end-of-file in data set SP.CICN (record 1).	READCD
-2026	Error in reading SP.CICN (record 1).	READCD
-2027	Unexpected end-of-file in A.INPTR1 (type 03 cards when SP.T1OLD is present).	READCD
-2028	Error in reading A.INPTR1 (type 03 cards when SP.T1OLD is present).	READCD
-2029	Unexpected end-of-file in SP.T1OLD (type 03 cards).	READCD
-2030	Error in reading SP.T1OLD (type 03 cards).	READCD
-2031	Unexpected end-of-file in A.INPTR1 (type 03 cards).	READCD

Message number	Reason	Subprogram where issued
-2033	Convergence criterion specified both in A.INPTR1 and on type 21 card of A.NIP, or in neither place. It should be specified once and only once.	READCD
-2034	Same as 2033.	READCD
-2035	An SN order greater than that available from the SN library has been specified, and no type 03 cards are present in A.INPTR1 or SP.T1OLD.	READCD
-2222	Error in reading SP.T1NEW (file 2, record 1).	T1EDIT
-3000	Error in reading A.INPTR1 card images.	T1EDIT
-3001	Unexpected end-of-file in A.INPTR1 (type 05 cards for delete option).	READ05
-3002	Error in reading A.INPTR1 (type 05 cards for delete option).	READ05
-3003	Unexpected end-of-file in SP.T1OLD (type 05 cards).	READ05
-3004	Error in reading SP.T1OLD (type 05 cards).	READ05
-3005	Unexpected end-of-file in GEOM (record type 9).	READ05
-3006	Error in reading GEOM (record type 9).	READ05
-3007	Unexpected end-of-file in A.INPTR1 (type 05 cards).	READ05
-3008	Error in reading A.INPTR1 (type 05 cards).	READ05
-3010	The composition labels from GEOM and those from A.INPTR1 do not match.	READ05
-3333	Error in reading SP.T1NEW (file 2, record 2).	T1EDIT
-4444	Error in reading SP.T1NEW (file 2, record 3).	T1EDIT
-5001	Unexpected end-of-file in A.INPTR1 (card type 07).	READ78
-5002	Error in reading A.INPTR1 (card type 07).	READ78
-5003	Unexpected end-of-file in SP.T1OLD (card type 07).	READ78
-5004	Error in reading SP.T1OLD (card type 07).	READ78

Message number	Reason	Subprogram where issued
-5555	Error in reading SP.T1NEW (file 2, record 4).	T1EDIT
-5598	Buckling search was specified. This is not allowed.	T1EDIT
-5599	Error in reading SP.T1NEW (file 1, for end-of-file mark).	T1EDIT
-5600	No end-of-file for data set SP.T1NEW (file 1).	T1EDIT
-6001	Unexpected end-of-file in A.INPTR1 (card type 06).	READ06
-6002	Error in reading A.INPTR1 (card type 06).	READ06
-6003	Unexpected end-of-file in SP.T1OLD (card type 06).	READ06
-6004	Error in reading SP.T1OLD (card type 06).	READ06
-6007	There are too many density factors by interval specified in A.INPTR1 on type 06 cards for the number of intervals defined in GEOM.	READ06
-6008	No old binary data set SP.T1OLD exists, and one has been specified. The type 06 cards cannot be read.	READ06
-6009	The region labels on A.INPTR1 type 06 cards do not correspond to those defined in GEOM.	READ06
-6010	Unexpected end-of-file in A.INPTR1 (card type 06).	READ06
-6011	Error in A.INPTR1 (card type 06).	READ06
-6012	Unexpected end-of-file in GEOM (record 3).	READ06
-6013	Error in GEOM (record 3).	READ06
-6014	Unexpected end-of-file in GEOM (record 9).	READ06
-6015	Error in GEOM (record 9).	READ06
-6016	Unexpected end-of-file in A.INPTR1 (card type 06).	READ06
-6017	Error in A.INPTR1 (card type 06).	READ06

Message number	Reason	Subprogram where issued
-6018	There are too many density factors by interval specified in A.INPTR1 on type 06 cards for the number of intervals defined in GEOM.	READ06
-6666	Error in reading SP.T1NEW (file 1, record 5).	T1EDIT

9. SNIN1D (NUI005) Timing Information

Timing for this module varies only slightly with the type of problem run. Module-dependent input varies little in complexity for a search problem or a k-calculation. The average time for processing the module-dependent input data is less than 0.1 minutes.

10. SNIN1D (NUI005) Sample Output

The following material is representative of the printed output from the SNIN1D module. The description of the output information is given in Section 2.

THIS IS A REAL SOLUTION TO A REACTIVITY PROBLEM WITH ISOTROPIC SCATTERING

THE GEOMETRY TYPE IS A SLAB

THE LEFT BOUNDARY IS REFLECTIVE

THE RIGHT BOUNDARY IS REFLECTIVE

THE MAXIMUM NUMBER OF INNER ITERATIONS FOR EACH GROUP IS 20

THE MAXIMUM NUMBER OF OUTER ITERATIONS IS 100

THE SN ORDER IS 8

THE CONSTANT FACTOR USED FOR CONVERGENCE IN A K EFFECTIVE CALCULATION OR INHOMOGENEOUS SOLUTION IS 0.100000D-04

THE PARAMETER OSCILLATION DAMPER TO BE USED FOR A CRITICALITY SEARCH IS 0.100000D 01

THE NORMALIZATION FACTOR IS 0.100000D 01

THE NUMBER OF GROUPS IS 16

THE NUMBER OF UPSCATTER GROUPS IS 0

THE NUMBER OF DOWNSCATTERING GROUPS IS 5

TABLE OF SN CONSTANTS

DIRECTION NUMBER	ANGLE(THETA)	ANGLE(PHI)	WEIGHTS	DIRECTION COSINES
1	9.000000D 01	1.800000D 02	0.0	-1.000000D 00
2	9.000000D 01	1.620247D 02	5.330038D-02	-9.511897D-01
3	9.000000D 01	1.418871D 02	1.011727D-01	-7.867958D-01
4	9.000000D 01	1.252644D 02	1.377534D-01	-5.773503D-01
5	9.000000D 01	1.026044D 02	2.077735D-01	-2.182179D-01
6	9.000000D 01	7.739562D 01	2.077735D-01	2.182179D-01
7	9.000000D 01	5.473561D 01	1.377534D-01	5.773503D-01
8	9.000000D 01	3.811293D 01	1.011727D-01	7.867958D-01
9	9.000000D 01	1.797528D 01	5.330038D-02	9.511897D-01

FAST CORE STORAGE ALLOCATED FOR POINTR ARRAYS 60000
BULK (LCS) STORAGE ALLOCATED FOR POINTR ARRAYS 120000

PART TWO.

ONE-DIMENSIONAL, DISCRETE ORDINATE TRANSPORT THEORY COMPUTATION MODULE, SNARC1D (NUC003)

Designed by - G. J. Duffy*

Programmed by - G. J. Duffy, L. T. Bryant, H. Henryson, II and H. Greenspan

Documented by - L. T. Bryant and G. K. Leaf

*Now at Northern Illinois University, DeKalb, Illinois

1. SNARC1D (NUC003) Introduction

a. Description of Capabilities

This module solves the time-independent transport equation in one dimension for many groups, allowing up to linear anisotropic scattering. Geometries which are applicable include those that describe the sphere, cylinder, or slab. The real or adjoint solution may be calculated, and homogeneous or inhomogeneous problems may be solved.

Criticality search options are provided in addition to flux convergence, or k, calculation. The criticality search options which are provided are

1. critical dimension in which the entire reactor is varied to achieve criticality;
2. critical dimension in which a designated region is varied to achieve criticality;
3. concentration search, in which the concentration of designated materials are varied within region(s) to achieve criticality; and
4. inverse period, in which flux is assumed separable with respect to space and time, time variation is given by exp (αt), and criticality is achieved by varying α.

A fixed k or α may be specified, for the above searches, other than k = 1.0.

The module-dependent and -independent input to this module is provided by other modules of the ARC System. The modules which provide this input are identified in the next section.

After execution of this module certain data sets are produced or altered, as necessary. This is in addition to certain printed output edits which are described in section 2.

b. Standard Paths Which Utilize This Module, and Other Modules Utilized by Each Path

This module is invoked by standard path STP002, one-dimensional transport theory. The modules used by STP002 are the following:

MODXSISO (NUI006)	Run-time Microscopic Cross-section Modification
INHOMG (NUI001)	Multigroup Cross Section Homogenization Specifications
HOMOG (NUC001)	Multigroup Cross Section Homogenization
GNIP (NUI002)	Neutronics Input Processor
OUTMAN1D (NUE001)	One-dimensional Neutronics Output Manipulation
INVENT1D (AJC001)	One-dimensional Neutron Inventory
SNIN1D (NUI005)	One-dimensional Discrete Ordinate Transport Theory Specifications
SNARC1D (NUC003)	One-dimensional Discrete Ordinate Transport Theory Calculations

c. Data Sets Utilized by this Module

Upper-interface Data Sets	Records Read
BC, Boundary Condition Specifications	One of Specifications (type 1).
ES.D1D, One-Dimensional Distributed External Source	One of Specifications (type 1). One of One-Dimensional Distributed External Source (type 2).
ES.D1SH, One-Dimensional Shell Source	One of Specifications (type 1). Surface Source Mesh Organization (type 2) and One-Dimensional Surface Source Components.
FA.D1, One-Dimensional Adjoint Group Fluxes	One of Specifications (type 1). One of One-Dimensional Adjoint Flux (type 2).
FR.D1, One-Dimensional Real Group Flux	One of Specifications (type 1). One of One-Dimensional Scalar Real Flux (type 2).
FSA.D1, One-Dimensional Adjoint Fission Source	One of Specifications (type 1). One of One-Dimensional Adjoint Fission Source (type 2).
FSR.D1, One-Dimensional Real Fission Source	One of Specifications (type 1). One of One-Dimensional Real Fission Source (type 2).
GEOM, Geometry Data	All
SP.CICN, Code Independent Data	One of Specifications (type 1).
SP.CRIT, Criticality Search Specifications	One of Specifications (type 1). One of Concentration Search Modifiers (type 2) if present. One of Dimension Search Modifiers (type 3) if present.

Upper-interface Data Sets	Records Read
SP.T1NEW, New One-Dimensional Transport Theory Input	All
XS.C.ANI, Anisotropic Macroscopic Composition Cross Section Data	All
XS.C.MIN, Macroscopic Composition Cross Section Data	All
XS.ISO, Macroscopic Group Cross Sections	One of File Size (type 1, file 1). One of Isotope Names (type 2, file 1). One of Group Structure (type 3, file 1).

Lower-interface Data Sets	Records Written
FA.D1, One-Dimensional Adjoint Group Flux	Both
FA.D1A, One-Dimensional Adjoint Angular Group Flux	One of Specifications (type 1). NGROUP of One-Dimensional Adjoint Angular Flux (type 2).
FR.D1, One-Dimensional Real Group Flux	Both
FR.D1A, One-Dimensional Real Angular Group Flux	One of Specifications (type 1). NGROUP of One-Dimensional Real Angular Flux (type 2).
FSA.D1, One-Dimensional Adjoint Fission Source	Both
FSR.D1, One-Dimensional Real Fission Source	Both
GEOM.P, Geometry Data after Dimension Search	All records which were present in GEOM.
JA.D1, One-Dimensional Adjoint Currents	One of Specifications and one of One-Dimensional Adjoint Net Current.
JR.D1, One-Dimensional Real Currents	One of Specifications and one of One-Dimensional Real Net Current.
XS.C.MI1, Macroscopic Composition Cross Section Data after Concentration Search	All records which were present in XS.C.MIN.

2. SNARC1D (NUC003) Description of Problem and Method of Solution

a. Introduction

This module is based upon a translation of the Argonne National Laboratory transport code SNARG-1D.[1] The module solves the discrete ordinate S_N approximation to the one-dimensional multigroup neutron transport equation, utilizing the numerical approximations and solution techniques developed by Bengt Carlson.[2] Spatial coordinate systems are spherical, cylindrical, and slab (Cartesian). Isotropic and linearly anisotropic scattering between energy groups is permitted. Both real and adjoint solutions may be calculated for either homogeneous or inhomogeneous problems. Boundary conditions include free, reflective, and periodic. In addition, the white boundary condition is available for cylindrical geometry. The standard angular quadrature[1] is the S_N quadrature. The constants are stored for orders N=2,4,6,8,12, and 16 in the case of slab and spherical geometry. Constants for orders N=2,4,6, and 8 are stored for cylindrical geometry. Alternative angular quadrature schemes can be obtained by supplying appropriate direction cosines and weights in the module-dependent input which is described in the SNIN1D (NUI005) documentation.

External sources are of two types: volume source density (in units of neutrons per unit volume per sec.) and surface source density (in units of neutrons per unit surface area per sec.). The volume source density is associated with its corresponding spatial mesh cell, whereas the surface (shell) source density is associated with the edge of spatial mesh cell. Furthermore, volume source densities are restricted to be isotropic, while the surface source densities are permitted to be linearly anisotropic. Thus in the anisotropic case, the surface source density is specified by providing its zeroth and first Legendre coefficients. If the volume source density is not specified with any energy dependence it can, on option, be multiplied by the fission spectrum corresponding to its spatial location.

A rudimentary group-skipping option is provided whereby user-specified groups are not recalculated in either the inner or the outer iteration processes. In addition, a diffusion theory calculation can be performed for specified energy groups. However, this option and the group-skipping

option are mutually exclusive. If the user specifies the sets of direction cosines and weights, either the diffusion theory option should not be used or the "diffusion condition" ($\sum_m \mu_m^2 W_m = \frac{1}{3}$) must be satisfied.

Criticality searches can be performed in which certain parametric vectors that are constrained to lie on a given straight line are adjusted in order to achieve a desired value of k_{eff} or the inverse reactor period α. In the critical dimension search the region boundaries within the reactor may be varied and/or the size (outside dimensions) of the reactor may be varied.

The concentration search operates on the volume fractions of the materials, modifying, as necessary, each cross section type to achieve criticality. Nonfissionable compositions can modify fissionable ones; but if a nonfissionable composition is to be modified by a fissionable one the nonfissionable composition must be made to appear to be a fissionable one by adding the fissionable material to it with a zero volume fraction. In addition, the scattering band width of the modifying composition must be less than or equal to the band width of the composition to be modified.

The inverse reactor period (α) search can be performed. In this case the flux is assumed separable with respect to space and time, with the time variation given by exp (αt), and α is varied to achieve criticality.

A fixed k_{eff} or α may be specified for these searches rather than the critical value $k_{eff} = 1$.

Output listings of the calculations performed by the module are provided. The information included in the listings are

1. the fission rate summary by interval, summed for each region and for the total fission rate;
2. the fission neutron density for each interval, $\sum_j (\nu \cdot \sigma_f)_j \Phi(\underline{i},j)$, with the average radius of the interval indicated;
3. the fission neutron density from parent groups with respect to interval number and average radius;
4. final (converged) flux print by groups for every interval, showing the average radius;
5. a monitor print (intermediate and final) showing the outer iteration count, total loop count, neutron balance, epsilon, eq.,

lambda, fission change, eigenvalue, and time elapsed in minutes since the previous monitor print;

6. the number of times the neutron balance has exceeded the inner loop convergence criterion, along with the average and maximum excess;
7. the number of times the inner iteration maximum has been exceeded for each group, the number of times the inner iteration maximum has been exceeded for each group since the last outer iteration, and the number of times the neutron balance has exceeded the inner loop convergence criterion for each group; and
8. total problem time.

In addition to the above, an option is provided to print out the angular fluxes by group for all mesh points.

Input parameters to the module are also printed out. These parameters include both module-dependent input, as specified by module SNIN1D (NUI005), and module-independent input, as specified by the other modules which are utilized by standard path STP002. Upon request the standard output of data module OUTMAN1D (NUE001) is provided.

Certain output data sets are written by the module. These data sets, FR.D1, FR.D1A, FA.D1, FSA.D1, JR.D1, FSR.D1, and JA.D1, fall into two categories real and adjoint. The real data sets which are written are fluxes (FR.D1), currents (JR.D1), and fission sources (FSR.D1). Their adjoint counterparts, FA.D1, JA.D1, and FSA.D1, are written if the solution type is adjoint. A more detailed description of the output may be found in section 9, along with a sample output listing.

b. <u>The Mathematical Model</u>

This section describes the mathematical basis for the one-dimensional transport theory module.[1]

Given a position vector x and a point Ω on the unit direction sphere associated with the vector x, the angular flux in energy group j, $N_j(x,\Omega)$, is assumed to satisfy the multigroup stationary neutron transport equation

$$\Omega\cdot\nabla N_j(x,\Omega) + [\sigma_t(x,j) + \frac{\alpha}{v_j} + CB]\, N_j(x,\Omega) = S_j(x,\Omega), \qquad (1)$$

where σ_t represents the total cross section and the source term $S_j(x,\Omega)$ may include tission source, scattering source, and external sources. External sources may include linearly anisotropic surface sources and isotropic distributed sources. The parameter α represents the asymptotic inverse period, v_j is the neutron speed, and CB is a transverse buckling correction factor which may be applicable in cylindrical geometries.

The angular variable Ω is now discretized into a set of angular variables Ω_m, where m is a direction index. Each Ω_m is specified by a triplet of direction cosines (μ,η,ξ).

The number of independent quantities is limited to, in most cases, a single ordered set of direction cosines $\{\mu_m\}$ which identify the set of Ω_m. A weight W_m is associated with each Ω_m in order to perform the necessary integration over the set of Ω_m.

The standard sets of direction cosines $\{\mu_m\}$ and their associated weights $\{W_m\}$ are constructed as follows. The directions are held invariant with respect to 90° rotation, and with respect to reflections about the origin and the axes. Hence, only one octant on the unit direction sphere need be considered.

Given the order n of the discrete representation, n/2 levels are established on the octant of the sphere. If ℓ is the level index, $1 \leq \ell \leq n/2$, then there are $n/2 - \ell + 1$ points on any level. It can be shown that there are $(n/4)(n/2+1)$ points on the octant of the sphere. These points represent the discrete directions of the points Ω_m. A point on a level will have the coordinates (μ_i, μ_k, μ_ℓ), where $(1 \leq i \leq n/2)$ and $(1 \leq k \leq n/2)$. For fixed ℓ, as i increases by 1, k decreases by 1, and the sum $i+k+\ell = n/2 + 2$. Clearly,

$$\mu_i^2 + \mu_k^2 + \mu_\ell^2 = 1. \tag{2}$$

Equation (2) and the invariance under rotation and reflection, as indicated above, yields

$$\mu_m^2 = \mu_1^2 + (m-1)\Delta, \qquad \text{where } m = 1,2,3,\ldots,n/2 \tag{3}$$

and

$$\Delta = \frac{2}{n-2}(1-3\mu_1^2). \tag{4}$$

Given arbitrary μ_1^2 all μ's can be determined from the above relationships.

Similar properties are induced on the direction weights $\{W_m\}$ associated with the direction cosines $\{\mu_m\}$. The following properties must be satisfied:

$$\sum_{m=1}^{M} W_m = 1 , \tag{5}$$

$$\sum_{m=1}^{M} \mu_m W_m = 0 , \tag{6}$$

and

$$\sum_{m=1}^{M} \mu_m^2 W_m = 1/3 \tag{7}$$

where M is the total number of directions.

Equations (5), (6), and (7) pertains to solid angle normalization, the balance equation for transfer of neutrons (angular redistribution), and the so-called "diffusion condition," respectively.

The octant surface is partitioned into surface elements, each element corresponding to a direction Ω_m. The following auxiliary sets are defined:

$$\bar{\mu}_m^2 = \mu_1^2 + (m-2/3)\Delta \tag{8}$$

and

$$\bar{\bar{\mu}}^2 = \mu_1^2 + (m-1/3)\Delta. \tag{9}$$

The area of this surface element in units of $\pi/2$, is then the W_m (weight) associated with Ω_M.

Let x_i, $(i=1,2,\ldots,I_{max})$, denote a set of points in the reactor forming a finite difference mesh. These points may be arbitrarily placed subject to the provision that material changes occur at these mesh points. Let m be the direction index and let the cell face area perpendicular to x_i be denoted by A_i.

Let the index $\underline{i}$ represent the center of the mesh cell $[x_i, x_{i+1}]$ and let the index m represent the center of the angular mesh interval defined by $[m_{i-1/2}, m_{i+1/2}]$. Further $V_{i+1/2}$ is defined as the geometric volume of the mesh cell.

The following figure describes a typical cell in the two-dimensional mesh induced by space and angular discretization.

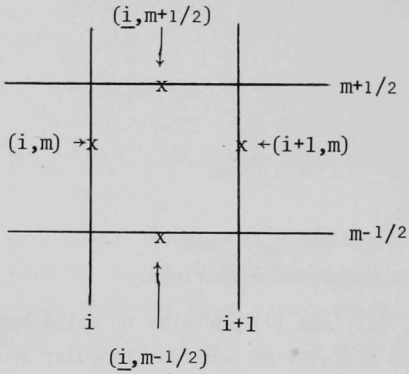

Finite difference approximation to the neutron balance equation is written as

$$\frac{\mu_m}{V_{\underline{i}}}\left(A_{i+1}\, N_{i+1,m,j} - A_i\, N_{i,m,j}\right) + \frac{1}{V_{\underline{i}}}\,\frac{A_{i+1} - A_i}{W_m}\left\{\beta_{m+1/2}\, N_{\underline{i},m+1/2,j} - \beta_{m-1/2}\, N_{\underline{i},m-1/2,j}\right\} + \sigma_t(i,j) N_{\underline{i},m,j} = S_{\underline{i},m,j}\ , \tag{10}$$

with

$$N_{\underline{i},m,j} = \frac{1}{2}\left[N_{i+1,m,j} + N_{i,m,j}\right]$$

$$= \frac{1}{2}\left[N_{\underline{i},m+1/2,j} + N_{\underline{i},m-1/2,j}\right]\ . \tag{11}$$

The first term of equation (10) accounts for flow through the geometric face area of the cell and the second term represents flow across the direction intervals. This angular redistribution term (second term) occurs only in curved geometries and accounts for the directional derivatives that occur in the neutron transport equation.

Curvatuve is defined as

$$GC_{m,i} = (A_{i+1}-A_i)\left\{\frac{2\beta_{m+1/2}}{W_m} + \mu_m\right\} , \tag{12}$$

and since

$$\beta_{m+1/2} - \beta_{m-1/2} = W_m \mu_m, \tag{13}$$

we can eliminate the β's from equation (12) by using the relationship described in equation (13) and obtained the following recurrence relationship for equation (12):

$$GC_{m,i} = 0, \text{ for slab geometry}$$

or

$$GC_{m,i} = \left\{\begin{array}{ll} 0 & \text{if } W_m = 0, \\ \dfrac{GC_{m-1,i}\cdot W_{m-1} - (A_{i+1}-A_i)(W_m\mu_m+W_{m-1}\mu_{m-1})}{W_m} & \text{if } W_m \neq 0 \\ & \text{for spheres or cylinders.} \end{array}\right\} \tag{14}$$

It is noted that alternate construction of the weights and cosines may be used where the symmetries described above are not required. Equations (5) and (6) must be satisfied for the module to accept any alternate sets $(\{\mu_m\}\{W_m\})$.

c. <u>The Finite Difference Equations</u>

Neutron conservation must be maintained in writing the finite-difference approximation of equation 1. A neutron balance equation is written for an arbitrary cell enclosing a point (x,Ω_m). As the cell size approaches zero the balance equation becomes equation (1).

The recursive form of equation (10) for angular flux for decreasing $i(\mu_m<0)$ is

$$N_{\underline{i},m,j} = \frac{V_{\underline{i}}S_{\underline{i},m,j} + |\mu_m|(A_{i+1}+A_i)N_{i+1,m,j} + GC_{m,i}N_{\underline{i},m-1/2,j}}{GC_{m,i} + |\mu_m|(A_{i+1}+A_i) + V_{\underline{i}}\sigma_t(\underline{i},j)}, \tag{15}$$

and for increasing i, or flow in the outward direction, $(\mu>0)$ is

$$N_{\underline{i},m,j} = \frac{V_{\underline{i}}S_{\underline{i},m,j} + |\mu_m|(A_{i+1}+A_i)N_{i,m,j} + GC_{m,i}N_{\underline{i},m-1/2,j}}{GC_{m,i} + |\mu_m|(A_{i+1}+A_i) + V_{\underline{i}}\sigma_t(\underline{i},j)}, \tag{16}$$

where

$$V_{\underline{i}}S_{\underline{i},m,j} = \mu_m SL_{\underline{i},j} + S_{\underline{i},j} . \tag{17}$$

Here, $SL_{\underline{i},j}$ is the total anisotropic source for interval $\underline{i}$, group j, and $S_{\underline{i},j}$ is the total isotropic source for interval $\underline{i}$, group j.

In cylindrical geometry a starting direction is chosen for each level (ℓ). The starting direction $\mu_{0,\ell}$ is determined corresponding to $\eta_{0,\ell} = 0$. Thus,

$$\mu_{0,\ell} = -\sqrt{1 - \xi_\ell^2} .$$

These starting directions have a weight $W_{0,\ell} = 0$ associated with them.

In all, there are $(n/2)(n/2+1) + n/2 = (n/4)(n+4)$ directions to be considered.

d. Description of Source Components

In general, the source term in equation (10) contains three major components:

1. scattering source,
2. fission source, and
3. external source.

The scattering source may contain isotropic and anisotropic terms. For a given spatial interval [i,i+1], direction (m,ℓ) and energy group j, the total scattering source density $S_s(\underline{i},m,\ell,j)$ is defined by the following expression:

$$S_s(\underline{i},m,\ell,j) = \sum_{j'=1}^{J} \left\{ \sigma_0^{j'\to j}(\underline{i})\phi(\underline{i},j') + 3\mu_{m,\ell}\sigma_1^{j'\to j}(\underline{i})I(\underline{i},j') \right\} , \tag{18}$$

where the scalar flux ϕ is defined by

$$\phi(\underline{i},j') = \sum_{(m,\ell)} N(\underline{i},m,\ell,j)W_{m,\ell} \tag{18a}$$

and the current I is defined by

$$I(\underline{i},j') = \sum_{(m,\ell)} \mu_{m,\ell}\, W_{m,\ell}\, N(\underline{i},m,\ell,j) \quad . \tag{18b}$$

Furthermore, $\sigma_0^{j'\to j}(\underline{i})$ is the macroscopic, isotropic scattering cross section and $\sigma_1^{j'\to j}(\underline{i})$ is the macroscopic linear anisotropic cross section.

The fission source density term is defined by

$$F(\underline{i},j') = \frac{1}{\lambda} \sum \chi^{j'\to j}(\underline{i},j')\nu^*\sigma_f(\underline{i},j')\cdot\phi(\underline{i},j') \quad , \tag{19}$$

where λ represents (in inhomogeneous calculations) an estimation for k_{eff}, χ is the macroscopic fission spectrum, and $\nu^*\sigma_f$ is the macroscopic fission yield cross section.

The external source density can consist of two distinct types, as follows:

1. volume source density (distributed source), associated with the center of each mesh interval [i,i+1] (This source is assumed to be isotropic.);
2. surface source density (shell source), associated with the point (i+1) of the interval [i,i+1] (This source may be linearly anisotropic.)

e. Boundary Conditions

Several types of boundary conditions may be specified. The several types and their meanings are listed below:

1. Free boundary condition, which sets all incoming angular flux at the given boundary equal to zero for all incoming directions;
2. reflective boundary condition, which equates the angular flux at the given boundary for all directions $\mu_{m,\ell}$, i.e., $\phi(-\mu_{m,\ell})=\phi(\mu_{m,\ell})$;
3. periodic boundary condition, which requires equal angular flux at both boundaries for the corresponding direcitons; and
4. white boundary condition, in which the incoming angular flux has no correlation with the outgoing angular flux. (This condition is applicable to the right boundary only.)

f. Inner Iterations

The directional-evaluation rule and a scaled iteration procedure are used to make the angular flux stable with respect to round-off errors and speed convergence.

If the boundary conditions are of the implicit type (e.g., reflective), the requirements that the difference in the self-scattering source for two successive inner iterations satisfy the convergence criterion and that the angular flux satisfy the prescribed boundary conditions may cause the number of inner iterations to be excessive. An additional method is used to accelerate the rate of convergence process. Two angular-flux passes are made. The angular flux from the first pass is used as the source for the second pass, all other source components being set to zero. Then a linear combination of the angular fluxes from the two passes is used as the angular flux. The convergence of the inner iterations is tested, and the calculation proceeds.

For an inhomogeneous problem with neither fissions nor upscattering, one outer iteration completes the problem. For an inhomogeneous problem with fission and/or upscattering, the total source is recomputed after each outer iteration, and a new cycle of calculations is started.

If no external source is present (a homogeneous problem), we may compute the k_{eff} that corresponds to the system, or we may want to determine a parameter in the system that corresponds to a given k_{eff}. The latter

type of calculation is a criticality search; usually $k_{eff} = 1.0$ and the term "eigenvalue" (EV) is used for the critical parameter.

In the k_{eff} calculation, after each outer iteration we compute the total source and the ratio (λ_n) of the total fission source of this nth outer iteration to the total fission source (not normalized) of the (n-1)th iteration, and divide the fission source by λ_n; then we continue a new cycle of iterations. The product of the successive λ_n's converges to k_{eff}.

In the criticality searches, we obtain a sequence of converged outer iterations each of which corresponds to a pair (EV,λ). The process is as follows.

Given an initial specified EV, we determine the corresponding converged λ. With this λ and previous pairs (EV,λ), we construct a new value of EV. A new cycle of calculations is started with the changed EV, resulting in a corresponding λ. This is continued until the desired $\lambda(k_{eff})$ is obtained, and thus the final EV is obtained.

The directional-evaluation rule requires the computation to follow neutron travel in direction and energy. The computation is therefore started with the highest energy group at the outer boundary, proceeding along the inward directions until the inner boundary is met; then the outward fluxes are obtained. The procedure is continued through successive energy groups.

The scaled iteration procedure is discussed below within the context of the inner iterations.

For a given energy group j let n denote the inner iteration count. At each spatial point in direction (m,ℓ) the angular flux $N^{(n)}$ satisfies the following equation:

$$\frac{\mu_{m,\ell}}{V_{\underline{i}}}\left[A_{i+1}N_{i+1}^{(n)} - A_i N_i^{(n)}\right] + \frac{(A_{i+1} - A_i)}{V_{\underline{i}} \cdot W_{m,\ell}}\left[\beta_{m+1/2}N_{\underline{i}}^{(n)} - \beta_{m-1/2}N_{\underline{i}}^{(n)}\right]$$

$$+ \sigma_t(\underline{i},j)N_{\underline{i}}^{(n)} = \sigma_{0(\underline{i})}^{j\to j}N_{(\underline{i},j)}^{(n-1)} + 3\sigma_1\mu_{m,\ell}I_{(\underline{i},j)}^{(n)} + \tilde{S}_{(\underline{i},m,\ell,j)} \quad , \qquad (23)$$

where $\hat{S}$ denotes the remaining source terms.

Multiplying equation (23) by $W_{m,\ell}$ and summing over all directions we obtain the following relation:

$$[A_{i+1}I^{(n)}_{i+1,j} - A_i I^{(n)}_{i,j} + V_{\underline{i}}\sigma_t(\underline{i},j)\phi^{(n)}_{(\underline{i},j)}] = V_{\underline{i}}\sigma_0^{j\to j}(\underline{i})\phi^{(n-1)}(\underline{i},j) + V_{\underline{i}}\tilde{S}_{(\underline{i},j)} , \tag{24}$$

where $\tilde{S}$ is the result of integrating all sources except self-scattering source over all directions.

If $\phi^{(n)}$ were used in the self-scattering term in the above equation in place of $\phi^{(n-1)}$ the equality would not hold, since $\phi^{(n)}$ is at best an approximation to the solution of this equation.

Assuming that the major portion of the error in $\phi^{(n)}$ (and hence also the error in $I^{(n)}$) lays in its amplitude, replace $\phi^{(n)}$ and $I^{(n)}$ by $\gamma\phi^{(n)}$ and $\gamma I^{(n)}$, and also replace $\phi^{(n-1)}$ by $\gamma\phi^{(n-1)}$ in both sides of equation (24). Then determine the parameter by summing both sides of this expression over all spatial points and require that equality hold. They γ is defined by

$$\gamma \sum_i \left\{A_{i+1}I^{(n)}_{i+1,j} - A_i I^{(n)}_{i,j} + V_{\underline{i}}\sigma_t(\underline{i},j)\phi^{(n)}(\underline{i},j)\right\} = \gamma \sum_i V_{\underline{i}}\sigma_{0(i)}^{j\to j}\phi^{(n)}(\underline{i},j) + \sum_i V_{\underline{i}}\tilde{S}_{(\underline{i},j)} . \tag{25}$$

Since the factor which multiplies γ on the left side of equation (25) is equal to the expression $\sum_i V_{\underline{i}}\sigma_{0(\underline{i})}^{j\to j}\phi^{(n)}(\underline{i},j) + \sum_i V_{\underline{i}}\tilde{S}_{(\underline{i},j)}$, γ is given by

$$\gamma = \frac{\sum_i V_{\underline{i}}\tilde{S}_{(\underline{i},j)}}{\sum_i \left\{V_{\underline{i}}\sigma_{0(\underline{i})}^{j\to j}\left[\phi^{(n-1)}_{(\underline{i},j)} - \phi^{(n)}_{(\underline{i},j)}\right] + V_{\underline{i}}\tilde{S}_{(\underline{i},j)}\right\}} \tag{26}$$

The scale factor γ, assuming that it is positive and finite, is used to scale the flux before starting the next inner iteration.

The inner iteration process is continued until the number of inner iterations is exceeded or the following criterion is met:

$$\varepsilon_j \geq \sum_i \sigma_0^{j\to j}(\underline{i})\,|\phi^{(n)}_{(\underline{i},j)} - \phi^{(n-1)}_{(\underline{i},j)}|\,, \tag{27}$$

where ε_j is the inner iteration convergence criterion. After convergence is obtained for energy group j, the scalar flux and current for the jth group are used to form the scatter source for the $(j+1)^{st}$ energy group. The inner iteration process is then repreated for the $(j+1)^{st}$ energy group. An outer iteration is the result of performing these inner iterations for all groups.

g. Outer Iterations

The end of the nth outer iteration yields a set of scalar fluxes $\phi^{(n)}$ at all spatial points and for all energy groups. These fluxes were determined on the basis of using the scalar fluxes from the $(n-1)^{th}$ outer iteration to form the fission source used in calculating the fluxes $\phi^{(n)}$.

In the case of an homogeneous calculation the fission source is divided by an estimate for k_{eff}. Let

$$F^{(n)}_{\underline{i},j} = \sum_{j'=1}^{J} \chi^{j'j}_{\underline{i}}\,(\nu\sigma_f)_{\underline{i},j}\,\phi^{(n)}_{(\underline{i},j)}\;; \tag{28}$$

then an estimate $\lambda^{(n)}$ for k_{eff} is defined by

$$\lambda^{(n)} = \lambda^{(n-1)}\,\frac{\sum_j \sum_i F^{(n)}_{\underline{i},j} V_{\underline{i}}}{\sum_j \sum_i F^{(n-1)}_{\underline{i},j} V_{\underline{i}}} \qquad \text{for } n = 1,2,\ldots, \tag{29}$$

with $\lambda^{(0)}$ specified. The normalized fission source $(1/\lambda^{(n)})\,F^{(n)}_{\underline{i},j}$ is then used in the $(n+1)^{th}$ outer iteration to determine the next set $\phi^{(n+1)}$ of scalar fluxes.

In the case of an inhomogeneous source problem, the outer iteration procedure is the same as that described except the factor $\lambda^{(n)}$ is set equal to a specified value. For monitoring purposes a parameter, also called $\lambda^{(n)}$, is calculated and printed, but it is not used in the source calculation.

This factor is defined as follows. Let Q represent the result of summing all external sources over all angles, energy groups and spatial points; then the monitored factor $\lambda^{(n)}$ is defined by

$$\lambda^{(n)} = \frac{Q + \sum \sum F^{(n)}_{\underline{i},j} V_{\underline{i}}}{Q + \frac{1}{\lambda^{(n-1)}} \sum_j \sum_i F^{(n-1)}_{\underline{i},j} V_{\underline{i}}} \quad . \tag{30}$$

For an inhomogeneous problem with neither fissions or upscatter, one outer iteration is sufficient to define the flux.

The outer iterations are continued until either

(a) $n \geq n_{max}$, or

(b) the following convergence test is satisfied:

$$\sum_j \sum_i V_{\underline{i}} \left| F^{(n)}_{\underline{i},j} - \frac{\lambda^{(n)}}{\lambda^{(n-1)}} F^{(n-1)}_{\underline{i},j} \right| \leq \varepsilon \sqrt{I} \sum_j \sum_j V_{\underline{i}} F^{(n)}_{\underline{i},j} \quad . \tag{31}$$

Note that in the case of an inhomogeneous problem, $\lambda^{(n)}$ is a constant; thus test (31) determines the convergence with $\lambda^{(n)} = \lambda^{(n-1)}$.

h. Searches

The search options in the module are broken down into three categories: concentration search, critical dimension search, and inverse reactor period (α) search.

The concentration search, which operates on the volume fractions of the materials, modifying, as specified, each cross section to achieve criticality, is performed in the following manner. Let c be a given composition and let m range over the set of materials assigned to this composition; furthermore, let $\delta_{m,c}$ be the specified modifier for each material in composition c. The volume fractions of each material in c are constrained to lie on a line specified by the set $\{\delta_{m,c}\}_{m \in c}$. Thus, if $V^{(p)}_{m,c}$ and $V^{(p-1)}_{m,c}$ represent successive values of a volume fraction, and $Z^{(p)}$ and $Z^{(p-1)}$ are successive values of the control parameter, the following relationship holds:

$$V_{m,c}^{(p)} = V_{m,c}^{(p-1)} + (Z^{(p)} - Z^{(p-1)})\,\delta_{m,c}$$

for all $m \varepsilon c$.

For each composition c and reaction type x (x ranges over total, isotropic and anisotropic scattering, and fission yield ($\nu\sigma_f$) cross sections) the above expression induces the following relation between successive values of the macroscopic cross sections:

$$[\sigma_x]_{j'\to j}^{(p,c)} = [\sigma_x]_{j'\to j}^{(p-1,c)} + (Z^{(p)} - Z^{(p-1)})\,[\sigma_x]_{j'\to j}^{pc} \quad , \tag{32}$$

where $[\sigma_x]_{j'\to j}^{pc}$ denotes a psuedo-composition cross section defined by

$$[\sigma_x]_{j'\to j}^{pc} = \sum_{m\varepsilon c} [\sigma_x]_{j'\to j}^{m}\,\delta_{m,c} \quad ,$$

with $[\sigma_x]_{j'\to j}^{m}$ denoting the material cross section for reaction type x. If the reaction type is either total or fission yield, of course, the cross sections are independent of j´.

The fission-spectrum fractions are also modified, as specified, in the following way. For the pth control change let $\chi_{j'\to j}^{p,c}$ be the macroscopic fission-spectrum fraction for composition c from energy group j´ into energy group j. If $\chi_{j'\to j}^{p,c}$ is a vector, then of course, it is independent of j´ for each value of j. The modified fission-spectrum fraction is written as

$$\chi_{j'\to j}^{p,c} = \frac{\nu\sigma_{f,j}^{(p-1,c)}\chi_{j'\to j}^{(p-1,c)} + (Z^{p} - Z^{p-1})\nu\sigma_{f,j}^{(\rho c)}\chi_{j'\to j}^{(\rho c)}}{\nu\sigma_{f,j}^{p,c}} \tag{33}$$

where $\nu\sigma_f$, c, p, Z^p, and ρc are defined as before.

Thus, with these cross sections corresponding to the pth value of the control parameter, a series of outer iterations are performed to determine an estimate $\lambda^{(p)} = \lambda^{(p,n)}$ for k_{eff} corresponding to $Z^{(p)}$. If n represents the outer iterations index, then these iterations are terminated if formula (31) is satisfied and $|\lambda^{(p,n)} - \lambda^{(p,n-1)}| \leq \varepsilon$.

With the current pair $(Z^p, \lambda^{(p)})$ and the preceding pair $(Z^{(p-1)}, \lambda^{(p-1)})$, a linear extrapolation process is used to produce a new estimate, $Z^{(p+1)}$, for the control parameter. The extrapolation formula is given by

$$Z^{(p+1)} = Z^{(p)} + (1-\lambda^{(p)}) \frac{Z^{(p)} - Z^{(p-1)}}{\lambda^{(p)} - \lambda^{(p-1)}} \cdot d \tag{34}$$

where d is a user-specified constant with the following default values. For geometry searches, d = 1.0; for time absorption calculations d = 0.75; and for concentration searches, d = 0.5. This number is sometimes known as the "parameter oscillation damper."

If k_0 denotes the desired value of k_{eff} to which the search is to be performed, then the algorithm divides the fission spectrum by k_0. Thus, if $k^{(p)}$ represents the value of k_{eff} corresponding to the value $Z^{(p)}$ of the control parameter, the algorithm will calculate the ratio $\lambda^{(p)} = k^{(p)}/k^{(0)}$ rather than $k^{(p)}$ as the result of a set of outer iterations. Thus in a search the value of Z is sought for which $\lambda = 1.0$. For this reason, the extrapolation formula (34) will always involve the factor $(1 - \lambda^{(p)})$ regardless of the value of k_0. In addition, the search is concluded when the test $|1-\lambda^{(p)}| \leq \varepsilon$ is satisfied.

The search procedure is started by specifying an initial estimate $Z^{(0)}$ for the control parameter and an increment ΔZ from which $Z^{(1)}$ is calculated by $Z^{(1)} = Z^{(0)} + \Delta Z$. Then the first set of outer iterations uses macroscopic cross sections defined by

$$\sigma_x^{(0)} = \hat{\sigma}_x^{(0)} + Z^{(0)}(\sigma_{\rho c})_x$$

and the second set of iterations uses

$$\sigma_x^{(1)} = \sigma_x^{(0)} + \Delta Z(\sigma_{\rho c})_x \quad ,$$

where $\hat{\sigma}_x^{(0)}$ are the macroscopic cross sections generated from the module-independent input.

It should be noted that the algorithm will use $Z^{(p+1)}$ as defined by formula (34) without any check or test on the value of $Z^{(p+1)}$. However, if $|1-\lambda^{(p)}| > .05$ then the value (.05) sign $(1-\lambda^{(p)})$ is used in formula (34) in place of $(1-\lambda^{(p)})$.

Two types of dimension criticality searches are available. The radii may be modified to achieve criticality or an entire region or regions may be altered to achieve a desired k_{eff}.

In the dimension criticality search problems, the mesh line coordinates for the initial outer iterations are determined from the problem input specifications. For subsequent outer iterations n, the radii x_i^n for all mesh lines i are modified by the following formulae:

$$x_i^n = Z^p \cdot \frac{x_i^0}{x_R^0} \tag{35}$$

for critical radius problems, and

$$x_{i+1}^n = x_i^n + (1 + Z^{(p)} \cdot RZ_i) \cdot \Delta x_i \tag{36}$$

for region thickness problems. RZ_i is the specified x-dimension region modifier for all i in the corresponding region x_i^0 and x_R^0 are the initially specified radii for the mesh points x_i and the outermost radius x_R, respectively, and $\Delta x_i^0 = x_{i+1}^0 - x_i^0$.

The tests for convergence are made utilizing the same convergence formulas given in the concentration search convergence tests. Successive control parameters $Z^{(p)}$ are calculated as before until criticality is achieved.

The inverse reactor period (α) and/or fixed period (α_0) searches are performed by the following method. The flux is assumed separable with respect to space and time, with the time variation given by exp (αt). Hence, a quantity t_j is computed and added to the total cross section, σ_t, for each group j for each outer iteration. The following formulas calculate t_j for the indicated problem types:

$$t_j = \begin{cases} (Z^{(p)} + \alpha_0)/v_j & \text{for } \alpha \text{ calculation with fixed } \alpha_0, \\ Z^{(p)}/v_j & \text{for } \alpha \text{ calculation,} \\ \alpha_0/v_j & \text{for fixed } \alpha_0 \text{ for any problem type.} \end{cases}$$

$Z^{(p)}$ and α_0 are defined previously; v_j is the velocity for the jth group in cm/sec.

The convergence tests are the same as for the before-mentioned searches. The control parameter $Z^{(p)}$ is computed for each outer iteration, as before, until criticality is attained.

i. Diffusion Theory Option

If there is little concern about angular variation in the flux for a particular energy group or groups, a diffusion theory option is available. It can be shown that the following equations relate the flux $\phi_{i,j}$ and current $I_{i,j}$ at a point i and group j.
Let

$$\phi_{m,i,j} = \phi_{i,j} + 3\mu_m \bar{I}_{i,j} \quad ; \tag{37}$$

then

$$A_{i+1} \bar{I}_{i+1,j} - A_i \bar{I}_{i,j} + (\sigma_t)_{\underline{i},j} V_{\underline{i}} \left[\frac{\phi_{i+1,j} + \phi_{i,j}}{2} \right] = S^0_{\underline{i},j} \tag{38}$$

and

$$\frac{1}{3} \left(\frac{A_{i+1}+A_i}{2} \right) (\phi_{i+1,j} - \phi_{i,j}) + (\phi_t)_{\underline{i},j} V_{\underline{i}} \left[\frac{\bar{I}_{i+1,j} + \bar{I}_{i,j}}{2} \right] = S^1_{\underline{i},j} \quad , \tag{39}$$

where the total isotropic source $S^0_{\underline{i},j}$ is defined by

$$S^0_{\underline{i},j} = \sum_{k=1}^{G} V_{\underline{i}} (\sigma_0^{k\to j})_{\underline{i}} \left(\frac{\phi_{i+1,j} + \phi_{i,j}}{2} \right) + F_{\underline{i},j} + Q_{\underline{i},j} V_{\underline{i}} \tag{40}$$

and the total linear anisotropic source $S^1_{\underline{i},j}$ is defined by

$$S^1_{\underline{i},j} = \sum_{k=1}^{G} 3V_{\underline{i}}(\sigma_1^{k\to j})_{\underline{i}} \left(\frac{\overline{I}_{i+1,j} + \overline{I}_{i,j}}{2} \right) , \tag{41}$$

where the subscript on σ corresponds to the Legendre component of the transfer cross section from group k into group j, and $F_{\underline{i},j}$ is the fission source. Other variables are as previously defined.

Recursion relations can be written and solved for the above equations (38) and (39); however, round-off errors render the relations unstable. Therefore, recursion relations are written, using auxiliary functions p and q which are defined as

$$\overline{I}_{i,j} = p_i \phi_{i,j} - q_i \quad ,$$

and eliminating $\phi_{i+1,j}$ and $I_{i+1,j}$.

Defining

$$\sigma_{0\underline{i},j} = \frac{\sigma_{t,\underline{i},j} - \sigma_0^{k\to j}(\underline{i})}{2} ,$$

$$\sigma_{1\underline{i},j} = 3 \left(\frac{\sigma_{t,\underline{i},j} - \sigma_1^{k\to j}(\underline{i})}{2} \right),$$

$$\overline{A}_i = \frac{A_{i+1} + A_i}{2}$$

the recursion relations for p_i and q_i are

$$p_i = \frac{2\overline{A}_i \sigma_{0\underline{i},j} + p_{i+1} (\overline{A}_i A_{i+1} + \sigma_{0\underline{i},j}\sigma_{1\underline{i},j})}{\overline{A}_i (A_i + 2\sigma_{1\underline{i},j} p_{i+1}) + \sigma_{0\underline{i},j}\sigma_{1\underline{i},j}} \tag{42}$$

and

$$q_i = [S^0_{\underline{i},j}(\overline{A}_i + \sigma_{1\underline{i},j} p_{i+1}) - S^1_{\underline{i},j}(\sigma_{0\underline{i},j} + A_{i+1} p_{i+1})$$

$$+ q_{i+1}(\overline{A}_i A_{i+1} - \sigma_{0\underline{i},j}\sigma_{1\underline{i},j})]/[\overline{A}_i(A_i + 2\sigma_{1\underline{i},j} p_{i+1}) + \sigma_{0,\underline{i},j}\sigma_{1i,j}] . \tag{43}$$

The quantities p_i and q_i are evaluated for each mesh point proceeding from the right boundary, X_R, inward. $q_{X_R} = 0$ and $p_{X_R} = \sqrt{3}/3$ for a free right boundary condition and $p_{X_R} = 0$ and $q_{X_R} = 0$ for either the periodic or reflective right boundary condition. Then

$$\phi_{i+1,j}\ [\phi_{i,j}(A_i p_i - \sigma_{0\underline{i},j}) + A_{i+1}q_{i+1} - A_i q_i + S^0_{\underline{i},j}]/(A_{i+1}p_{i+1} + \sigma_{0\underline{i},j}) \tag{44}$$

with ϕ_i evaluated for each point proceeding from the left boundary, X_L, outward. The following boundary conditions hold:

$$\phi_{X_L} = \frac{q_{X_L}}{p_{X_L} + \sqrt{3}/3} \quad \text{for a free left boundary}$$

and

$$\phi_{X_L} = \frac{q_{X_L}}{p_{X_L}} \quad \text{for periodic or reflective left boundary.}$$

The flux for each interval is calculated as

$$\phi_{\underline{i},j} = \frac{\phi_{i,j} + \phi_{i+1,j}}{2} .$$

If the boundary conditions are periodic, then the q and the flux values are adjusted using the following relationships:

$$q_{1,i} = \frac{q_{1,i+1}(\bar{A}_i\ A_{i+1} - \sigma_{0\underline{i},j}\ \sigma_{1\underline{i},j})}{\bar{A}_i(A_i + 2\sigma_{1\underline{i},j}p_{i+1}) + \sigma_{0\underline{i},j}\ \sigma_{1\underline{i},j}} \tag{45}$$

and

$$\phi_{1,i+1,j} = \frac{(A_i p_i - \sigma_{0\underline{i},j})\phi_{1\underline{i},j} + A_{i+1}q_{1,i+1} - A_i q_{1,i}}{A_{i+1}p_{i+1} + \sigma_{0i,j}} \tag{46}$$

Equation (45) is evaluated for each mesh point proceeding inward from the right boundary where $q_1 = 1.0$; similarly, Equation (46) is evaluated from the left boundary, X_L, outward, where

$$\phi_{1X_L,j} = \frac{q_1 X_L + 1.0}{p_{X_L}}$$

and q_i and $\phi_{i,j}$ are replaced by

$$q_i + q_{1j} \frac{\phi_{X_L,j} - \phi_{X_R,j}}{\phi_{1X_R,j} - \phi_{1X_L,j}}$$

and

$$\phi_{i,j} + \phi_{1i,j} \frac{\phi_{X_L,j} - \phi_{X_R,j}}{\phi_{1X_R,j} - \phi_{1X_L,j}} \quad , \quad \text{respectively.}$$

The current, I, net flow, L, and angular-flux, $(\phi_{m,i,j})$, components are determined as follows:

$$I_{i,j} = p_i \phi_{i,j} - q_i \quad ,$$

$$L_j = I_{X_R,j} A_{X_R} - I_{X_L,j} A_{X_L} \quad ,$$

$$\overline{I}_{i,j} = \frac{1}{2} (I_{i,j} + I_{i+1,j}) \quad , \quad \text{and } 3\overline{I}_{i,j} \rightarrow \overline{I}_{i,j} \quad ;$$

then $\phi_{m,i,j}$ is evaluated as follows:

$$\phi_{1i,j} = \phi_{i,j} - 3I_{i,j} \quad ,$$

$$\phi_{2i,j} = \phi_{i,j} - \sqrt{3} I_{i,j} \quad ,$$

$$\phi_{3i,j} = \phi_{i,j} + 3I_{i,j} \quad ,$$

and

$$\phi_{m,i,j} = 0 \quad \text{for} \quad m > 3 \ .$$

It is noted that $\sum_{m=1}^{M} \mu_m^2 W_m = \frac{1}{3}$ is implicit in the definition of Equation (37). Hence, whenever a user-specified set of weights $\{W_m\}$ and direction cosines $\{\mu_m\}$ are used in the calculation, either the diffusion theory option should <u>not</u> be used, or the specified set must satisfy the implied condition.

3. SNARC1D (NUC003) Description of Module Flow

This section defines the overlay structure of this module and the flow of logic through the subprograms which form the module.

Section a. consists of an overlay structure diagram, showing the ARC System segments and SNARC1D module segments required by this module and their positions in the overlay heirarchy. This is followed by a list of the subprograms located in each SNARC1D module segment.

Section b. illustrates the flow or logic through the subprograms of this module, and section c. describes this flow in terms of the module's functions. The logic flow description should be used in conjunction with the diagram.

a. Overlay Structure Diagram

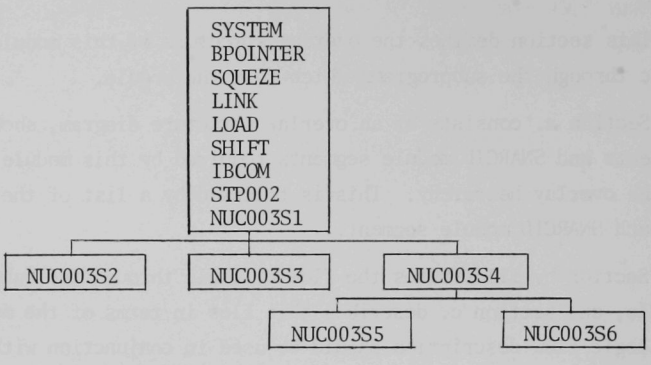

Subprograms contained in each module segment

NUC003S1	NUC003S2	NUC003S3	NUC003S4	NUC003S5	NUC003S6
Main Program	READXS	PROCDS	SNARC1	FPRINT1	IPRINT1
Block Data	ADJINT	CLEARF	CHINM1	FSORCE	MODRD1
NUPAGE	CALLXS	COMZER	CHXSEC	FXDSC1	MPRIN1
READBL	CMPFLG	READB2	CONVRG	GEOFN1	ONEDCD
SETADD	GETLNO	READB3	CSCGP1	GEOMS1	ONEDCC
SNUFF	READAN		CSCIN1	INNER1	ONEDDC
ARCERR	READCP		DTSIM1		ONEDTR
	READT4		EXEC		OUTER1
	SCANIS		FINDGP		PRANGF
	SETFBK		RITEXS		SETARG
	SKIPXS		RITXS1		SHELL1
	TABLE				SNCHK1
	TRANXS				GEOMOD
					MODXS

b. Diagrammatic Subprogram Logic Flow

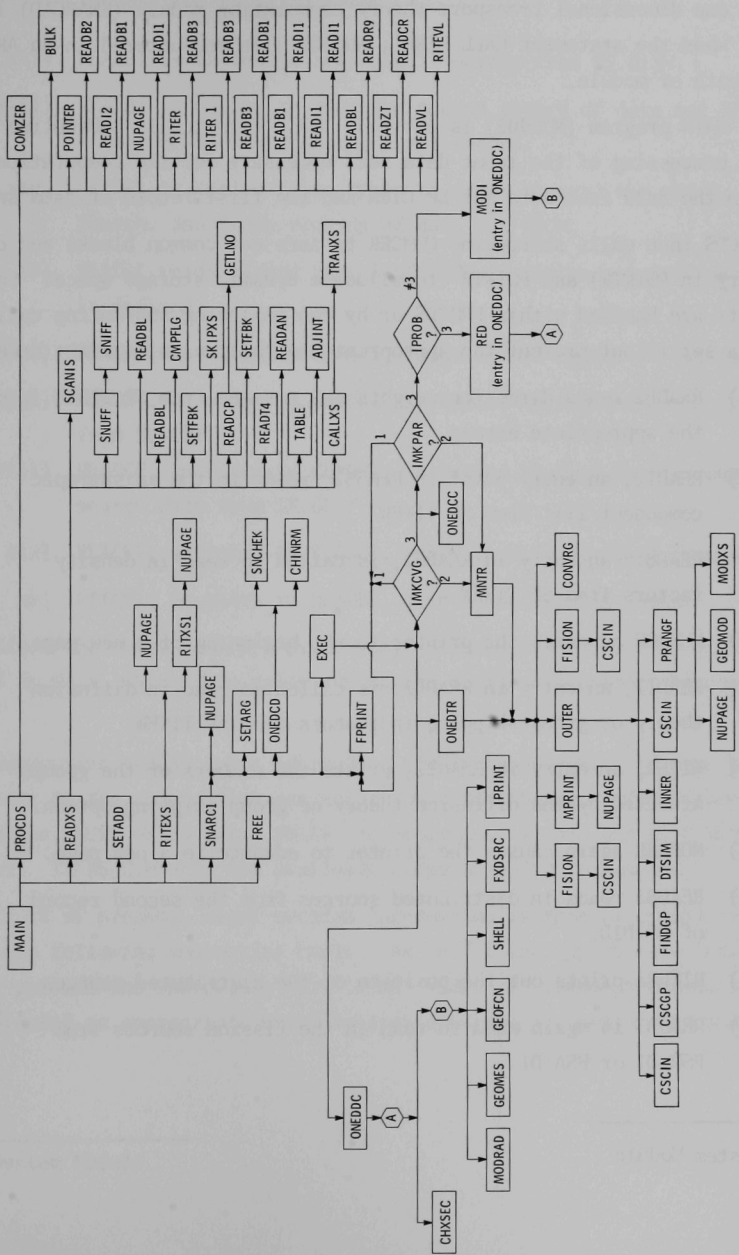

c. Descriptive Subprogram Logic Flow

The one-dimensional transport theory computation module (SNARC1D) is entered when the statement CALL LINK ('NUC003') is encountered in an ARC System path or module.

The MAIN program (NUC003) is entered. MAIN first calls subroutine PROCDS for the processing of the input data sets necessary for the computation. PROCDS reads in the data from data set SP.CICN and the first record of data set SP.T1NEW.

PROCDS then calls subroutine COMZER to zero out common blocks and calls BULK (an entry in POINTR) and POINTR† to allocate dynamic storage space. Further data sets are handled within PROCDS or by the following subroutine calls. If the data set is not present the appropriate subroutine call is not made.

i) READB2 reads direction weights and cosines from SP.T1NEW into the appropriate arrays.

ii) READI2, an entry point in READB2, reads in the anisotropic component list from SP.T1NEW.

iii) READB1, an entry in READB2, is called to read in density factors from SP.T1NEW.

iv) NUPAGE advances the printer to the beginning of a new page.

v) READI1, an entry in READB2, is called to read in diffusion theory or group-skipping indicators from SP.T1NEW.

vi) RITER, an entry in READB2, prints the numbers of the groups affected by the diffusion theory or group-skipping option.

vii) NUPAGE again causes the printer to advance to a new page.

viii) READB3 reads in distributed sources from the second record of ES.D1D.

ix) RITER1 prints out the position of the distributed sources.

x) READB3 is again used to read in the fission sources from FSR.D1 or FSA.D1.

---

†ARC System Module

xi) READB3 is again called to read in the real or adjoint fluxes from FR.D1 or FA.D1.

xii) READB1 is called to read shell sources from ES.D1SH.

xiii) READB1 is called to read the second record of data set GEOM after PROCDS has read the first record.

xiv) READI1 is called three times in order to read the third, fourth, and fifth records of data set GEOM.

xv) READBL reads record type 8 of GEOM if finite geometry data is defined.

xvi) READR9, an entry in READB2, reads record type 9 of data set GEOM.

xvii) READZT, an entry in READB2, is called to read interval modifiers from SP.CRIT.

xviii) READCR, an entry in READB2, is called to read in the composition search data from SP.CRIT.

xix) READVL, an entry in READB2, reads in velocity data from XS.ISO.

xx) RITEVL, an entry in READB2, prints the velocity data.

After the above data set processing is accomplished, return is made through PROCDS to MAIN, which then calls subroutine READXS for processing cross section data.

Subroutine READXS calls subroutine SCANIS to determine if some composition necessary to the computation has anisotropic scattering. READXS then calls subroutine SNUFF which calls SNIFF† to determine if data set XS.C.MIN is present. If XS.C.MIN is not available computation is terminated.

If it si present, cross section information is then processed by READXS or by the following subroutine calls. Again, if the appropriate information is not present the subroutine call is not made. If inconsistencies or errors are detected an appropriate error is indicated and processing terminates.

---

†ARC System Module

READBL is called to process set-wide fission spectrum data from XS.C.MIN for either a matrix or a vector calculation. READXS then enters a composition loop and calls the following.

i) CMPFLG is called to determine whether a composition from XS.C.MIN is needed (i.e., whether or not this composition number is in the table of compositions).

ii) SETFBK sets up the composition index in table INPFBC or INPBIC.

iii) SKIPXS skips past records of XS.C.MIN and XS.C.ANI for compositions not needed.

iv) READCP reads the type 3 record of XS.C.MIN and the type 2 record of XS.C.ANI for one composition. READCP calls subroutine GETLNO, which indicates how many anisotropic scattering blocks are needed for this composition.

v) SETFBK is called to read and store appropriate information regarding the fission spectrum for the composition.

vi) READT4 reads record type 4 of XS.C.MIN for one group.

vii) READAN reads and stores the type 3 records from XS.C.ANI and keeps count of the number of anisotropic components stored.

viii) TABLE generates the table which gives the number of composition blocks for each composition.

ix) ADJINT reorders arrays by group, thus transposing the matrices for an adjoint calculation. The quantities involved are fluxes and/or sources, cross sections, velocities, and fission spectra.

x) CALLXS calls TRANXS for each composition block. TRANXS reorders the cross sections for an adjoint calculation.

Return is made through READXS to MAIN, which then calls subroutine SETADD to set the address of the various arrays in core by calls to PUTPNT and GETPNT, which are entries in POINTR.

MAIN next calls subroutine RITEXS, which first calls NUPAGE for a new page on the output printer. RITEXS prints out appropriate information on the cross-section input data. Further calls to NUPAGE are made as necessary.

After printing the input information, MAIN calls subroutine SNARC1, which is the main "driver" of the computation segment of the module.

SNARC1 first calls NUPAGE and then calls subroutine SETARG, which sets up the argument lists of a number of the subroutines of the rest of the module. Upon return from SETARG, SNARC1 initializes certain constants and calls subroutine ONEDCD, which calls subroutines SNCHEK and CHINRM (entry point in CHINM1) to check the SN constants, compute the direction mates, and set up the fission spectrum fractions in working cross section and fission spectrum fraction arrays, respectively. After return from ONEDCD, SNARC1 calls EXEC, which controls the computational iterations.

Subroutine EXEC initializes certain constants and calls subroutine ONEDDC. ONEDDC makes the following calls as appropriate.

i) If the problem is concentration search, a call is made to subroutine CHXSEC to modify cross sections and fission spectrum fractions.

ii) MODRAD, an entry in subroutine MODRD1, is called to determine the mesh line locations for the problem.

iii) GEOMES, an entry in subroutine GEOMS1, computes the area element at a point as a function of the geometry type.

iv) GEOFCN, an entry in subroutine GEOFN1, computes geometric functions for later use in angular flux computations.

v) SHELL, an entry point in SHELL1, processes surface source calculation.

vi) FXDSRC, an entry in subroutine FXDSC1, normalizes the distributed source.

vii) IPRINT, an entry in subroutine IPRNT1, prints geometry data input.

Upon return to EXEC from ONEDCC, EXEC calls subroutine ONEDTR.

Subroutine ONEDTR calls FISION, an entry point in subroutine FSORCE, which computes the fission source for the problem. FSORCE calls CSCIN, an entry point in subroutine CSCIN1, when necessary to obtain the appropriate cross sections for the fission source calculation.

ONEDTR then calls MPRINT, an entry in subroutine MPRNT1, which edits and prints a monitor line. MPRINT calls NUPAGE as necessary.

ONEDTR next calls OUTER, an entry in subroutine OUTER1, which goes through the outer iteration loop for all groups. OUTER makes the following calls to subroutine entry points during an outer iteration. (If certain calls are not necessary to the calculation they are skipped.)

i) CSCIN is called to obtain the appropriate cross sections for each interval.

ii) CSCGP, an entry in subroutine CSCGP1, is called to get the scattering vector for each interval and group.

iii) FINDGP is called to determine if there are groups for which the diffusion theory option is to be used during the calculation.

iv) DTSIM, an entry in subroutine DTSIM1, does a diffusion theory calculation consistent with linear anisotropic scattering on the diffusion theory system for the group specified in the module dependent input.

v) INNER, an entry point in subroutine INNER1, controls the inner iteration loops. INNER computes currents, scalar fluxes, and angular fluxes for the appropriate group.

vi) CSCIN is called after inner loop convergence to obtain the appropriate cross sections for the computation of certain group statistics.

vii) After all convergence tests are met and the module is making a "converged" pass in order to print out the necessary converged data, subroutine PRANGF is called. If the user so requests, subroutine PRANGF prints out the converged angular fluxes, with appropriate calls to NUPAGE as necessary. If a geometry search is being performed, PRANGF calls subroutine GEOMOD to edit and

write the modified geometry data on a modified geometry data set GEOM.P. If a concentration search was specified, PRANGF calls subroutine MODXS, which writes the modified composition-level cross section data into data set XS.C.MI1.

Upon return to subroutine ONEDTR through PRANGF and OUTER, ONEDTR increments the outer iteration count and calls FISION, an entry point in subroutine FSORCE. As before, FISION computes the fission source for the problem.

ONEDTR calls subroutine CONVRG in order to calculate convergence criteria and check convergence. A convergence flag, IMKCVG, is set before return is made through ONEDTR to EXEC.

If the problem has converged and IMKCVG=1, EXEC returns to SNARC1 for final printout of results.

If IMKCVG=2, the problem has not converged and EXEC calls entry MNTR in subroutine ONEDTR which goes through the loop from where ONEDTR calls MPRINT as described above.

If IMKCVG=3, EXEC calls subroutine ONEDCC for further convergence tests.

Upon return to EXEC a convergence flag IMKPAR is tested. If IMKPAR=1, the search has converged and return is made to SNARC1 for final print. If IMKPAR=2, the search has not converged and entry MNTR in subroutine ONEDTR is called and the loop is repeated. If IMKPAR=3, a test is made on the problem type. If the problem is a concentration search, entry point RED in subroutine ONEDDC is called. RED enters ONEDDC at the point where subroutine CHXSEC is called, and the search loop is repeated as indicated. If the problem is a dimension criticality search, entry point MODI of subroutine ONEDDC is called. MODI enters ONEDCC at a point after the call to subroutine CHXSEC, and the search loop is repeated as indicated.

After return to EXEC from the search call (MODI or RED), subroutine ONEDTR is called and the loop repeated as indicated until convergence is obtained or the maximum number of outer iterations, as specified by the user, is exceeded. Return is then made to SNARC1, which calls FPRINT, an entry point of subroutine FPRNT1, for editing and final print of results. After final print of the results return is to SNARC1 which calls FREE to release the bulk storage space used. This concludes the normal execution of one-dimensional transport theory computation module.

4. SNARC1D (NUC003) Subprogram Descriptions

This section contains descriptions of all subprograms which are part of the SNARC1D module. The descriptions appear in alphabetical order by subprogram name.

Each subprogram description begins with a listing of the calling sequence of the subprogram, and of its entry points, if any. Subsection 1 is a list of the arguments of the subprogram and its entry points, in order of appearance, with the type of each argument, its dimensions in the subprogram if it is an array, and its definition or use. The four types of variables used are I*2, denoting an integer halfword (16 bits); I*4, denoting an integer fullword (32 bits); R*4, denoting a floating-point fullword; and R*8, denoting a floating-point doubleword (64 bits). Variables used as array dimensions are defined either as arguments or as members of common blocks.

Subsection 2 contains the names of all common blocks used by the subprogram. Each is followed by a list of the variables actually used from the common block within the subprogram, together with their types and definitions. The dimensions, if any, follow the variable name in parenthesis.

Subsection 3 contains a listing of important variables which are local to the subprogram, in a format like that of subsection 2. Subsection 4 describes the functions performed by the subprogram in terms of the overall purpose of the module.

Subsection 5 lists all subprograms called by this subprogram or any of its entry points; subsection 6 lists the subprograms which call this subprogram or any of its entry points.

Subsection 7 describes error messages which can be generated by this subprogram. A positive error number indicates that the error is non-terminating; a negative error number indicates that the error will cause the module to terminate.

More detailed explanations of the contents of common blocks, and of the variable-dimensioned arrays stored in the large container array /ARRAY/, can be found in sections 5 and 6.

DSRN, used in this section is an abbreviation of Data Set Reference Number.

Main program NUC003

1. Arguments - None

2. Common Blocks

/EXTPNT/

Variables used from this common block

Name	Type	Definition
ILNOAN	I*4	Pointer for anisotropic scattering order for a composition

/ARRAY/

Variables used from this common block

Name	Type	Definition
A (60,000 fast; 120,000 bulk)	R*8	Container array

/TIMER/

Variables used from this common block

Name	Type	Definition
TI	R*8	Clock time

/DSRNOS/

Variables used from this common block

Name	Type	Definition
NOUT	I*4	DSRN for output data set

/MODULE/

Variables used from this common block

Name	Type	Definition
MODULE	R*8	'NUC003'

3. Local Variables

Name	Type	Definition
MODNM2	R*8	'NUC003'
TIPREV	R*8	Clock time
TIDECR	R*8	Time increment since previous time

4. Functions and tasks performed by this program

This program is the driver for 1-D transport theory neutronics calculation module. It calls the various routines for reading the module-dependent and module-independent data sets (PROCDS and READXS). Subroutine SETADD is called in order to set up storage for most of the arrays necessary during the calculation. Those arrays which are not set up at this time are set up through calls to POINTR (PUTPNT and GETPNT) in the routines where they are first used.

Subroutine RITEXS is called to write out the information which has been processed up to this point (input information).

Computation section execution is started by calling SNARC1. Upon return, time is checked and the time it took to run the NUC003 interface data set input section is printed out.

5. Subprograms called by this program

PROCDS
READXS
SETADD
RITEXS
SNARC1
CLOCK (IBM routine)
NUPAGE

6. Programs calling this program

STP002 and other paths using the one-dimensional transport capability

7. Error messages generated by this program - None

Subroutine ADJINT (GGNVEL, FLXINP, SRCDIS, CHI, NINTIP, NORONP, NGROPP)

1. Arguments

Name	Type	Dimension	Definition
GCNVEL	R*8	NGROPP	Velocity
FLXINP	R*8	NINTIP*NGROPP	Scalar flux
SRCDIS	R*8	NINTIP*NGROPP	Distributed source
CHI	R*8	NINTIP*NGROPP* NFBLKS	Fission spectrum (χ)
NINTIP	I*4	--	Number of intervals
NORONP	I*4	--	1 if vector calculation, otherwise, NGROUP
NGROPP	I*4	--	Number of groups

2. Common Blocks

/SIMINT/

Variables used from this common block

Name	Type	Definition
MKRDIS	I*4	Distributed source indicator
NGROUP	I*4	Number of groups
NINTI	I*4	Number of intervals

/SIMIN3/

Variables used from this common block

Name	Type	Definition
NFBLKS	I*4	Number of fission blocks
NORONE	I*4	Number of groups for matrix calculation, 1 for vector calculation

3. Local Variables

Name	Type	Definition
K1	I*4	Group index on the flux source
K2	I*4	Group index on modified source and flux
U1	R*8	Dummy variable used for GCNVEL or SRCISH or FLXINP or SRCDIS or CHI

4. Functions and tasks performed by this subroutine

This subroutine flips (adjoints) arrays depending on a group index. Group indexing is inverted (i.e., 1→J, 2→J-1, 3→J-2,...K→(J-K+1),...,J→1). As they apply to the problem being solved, the following arrays are re-oriented (flipped):

(1) velocities,
(2) anisotropic components of the shell source,
(3) scalar fluxes,
(4) distributed (external) sources,
(5) composition level chi vectors, and
(6) composition level chi matrices.

The composition cross-sections are flipped by subroutine TRANXS.

5. Subprograms called by this subroutine - None

6. Subprograms calling this subroutine

READXS

7. Error messages generated by this subroutine - None

Subroutine ARCERR (NOERR)

1. Arguments

Name	Type	Dimension	Definition
NOERR	I*4	--	Error stop number

2. Common Blocks

/MODULE/

Variables used from this common block

Name	Type		Definition
MODULE	R*8	'NUC003'	

3. Local Variables - None

4. Functions and tasks performed by this subroutine

This subroutine prints the module name (NUC003) in which an execution time error has been detected and the error code number passed on to this subroutine by the calling program.

Error numbers that are positive are non-terminating. The non-terminating error number is printed out and execution continues. If the execution time error is a terminating error (negative number), IBM routine ABEND is called in order to obtain a dump to assist in locating the cause of the error.

5. Subprograms called by this subroutine

ABEND (IBM routine)

6. Subprograms calling this subroutine

PROCDS	INNER (entry in INNER1)
READB2	READCP
READB1 (entry in READB2)	SCANIS
READI1 (entry in READB2)	SKIPXS
READZT (entry in READB2)	READBL
READVL (entry in READB2)	READI2 (entry in READBL)
READCR (entry in READB2)	SETADD
READR9 (entry in READB2)	MODRAD (entry in MODRL1)

7. Error messages generated by this subroutine - None

Block data for SNARC1D (NUC003)

1. Arguments - None

2. Common Blocks

   /NAMES/
   /NAMADJ/
   /DSRNOS/
   /EXTPNT/
   /NAMES2/

3. Local Variables - None

4. Functions and tasks performed by this subroutine

   This routine initializes the contents of the common blocks named above. The variable array names of data sets which are read and/or written by this module are assigned in addition to the assignment of variable array names for certain of the parameters (CHI, FLXS, CSC, etc., etc) used in this module.

5. Subprograms called by this block data routine - None

6. Subprograms calling this block data routine - None

7. Error messages generated by this block data routine - None

Subroutine CALLXS (CSC, NGROPP, NCSCSP)

1. Arguments

Name	Type	Dimension	Definition
CSC	R*8	NCSCSP*NGROPP* NUMCMP	Cross-sections
NGROPP	I*4	--	Number of groups
NCSCSP	I*4	--	Number of cross-sections

2. Common Blocks

/SIMINT/

Variables used from this common block

Name	Type	Definition
NCSCS	I*4	Number of cross sections

/SIMIN3/

Variables used from this common block

Name	Type	Definition
NCBLKS	I*4	Number of composition blocks

3. Local Variables - None

4. Functions and tasks performed by this subroutine

This subroutine successively calls subroutine TRANXS once for each block of cross-sections. The cross-sections are arranged according to the number of composition blocks.

5. Subprograms called by this subroutine

TRANXS

6. Subprograms calling this subroutine

READXS

7. Error messages generated by this subroutine - None

Subroutine CHINM1 (SRCFXD, CHI, CHIM, NGROPP, NORONP)

Entry Points

Entry CHINRM

1. Arguments

Name	Type	Dimension	Definition
SRCFXD	R*8	NGRPP1	Fixed source
CHI	R*8	NORONP*NGROPP*NFBLKS	Fission spectrum (χ)
CHIM	R*8	NORONP*NGROPP*NFBLKS	Fission spectrum used during the calculation
NGROPP	I*4	--	Number of groups
NORONP	I*4	--	1 if vector calculation, NGROUP if matrix calculation

2. Common Blocks

/SIMFLP/

Variables used from this common block

Name	Type	Definition
PARKA	R*8	The fixed inverse reactor period, sec^{-1}

/SIMINT/

Variables used from this common block

Name	Type	Definition
MKRSHL	I*4	Shell source marker
MKRDIS	I*4	Density factor flag
NGROUP	I*4	Number of groups
NUMOI	I*4	Counter for number of outer iterations
IMKKA	I*4	Module-dependent input flag indicating α or k calculation
NGRPP1	I*4	Number of groups + 1
IPROB	I*4	Type of problem: 1 = Inhomogeneous, 2 = k_{eff} calculation, 3 = Concentration search, 4 = Buckling search, 5 = α search, 6 = Dimension search

/DSRNOS/

Variables used from this common block

Name	Type	Definition
NOUT	I*4	DSRN for output data set

/SIMIN3/

Variables used from this common block

Name	Type	Definition
NFBLKS	I*4	Number of fission blocks
NORONE	I*4	NGROUP for matrix calculation, 1 for vector calculation

3. Local Variables

Name	Type	Definition
P	R*8	1.0 or PARKA

4. Functions and tasks performed by this subroutine

Before an outer iteration is performed, the fission fractions CHI are put into a "working" fission fraction array CHIM for use and modification during the calculation. A check is made to see if we have a distributed source and SRCFXD is initialized to zero.

On all succeeding outer iterations this routine is not utilized other than being entered and returning to the calling routine with no operation being performed.

5. Subprograms called by this subroutine

ARCERR
NUPAGE

6. Subprograms calling this subroutine

CHINM1 is called by SETARG
CHINRM is called by ONEDCD

7. Error messages generated by this subroutine

ERROR IN MODULE NUC003 ± nnnnn

where ± nnnnn is

Message Number	Reason
-11001	An inhomogeneous calculation has been specified in SP.CICN and no distributed source or shell source is present.
-11002	If a fixed k_{eff} was defined in SP.CICN, it is less than or equal to zero.

Subroutine CHXSEC (CMPNDX, MC, MODCMP, CMPMOD, FISFCT, CHIM, CSC, NGROPP, NORONP, NCSCSP)

1. Arguments

Name	Type	Dimension	Definition
CMPNDX	I*4	NUMCMP	Composition index

Name	Type	Dimension	Definition
MC	I*4	NUMCMP	Composition number of composition modifier
MODCMP	I*4	NUMCMP	Composition to be modified
CMPMOD	I*4	NUMCMP	Composition modifier
FISFCT	I*4	NUMCMP	Fission blocks
CHIM	R*8	NORONP*NGROPP* NFBLKS	Fission spectrum used in the calculation
CSC	R*8	NCSCSP*NGROPP* NUMCMP	Cross-sections
NGROPP	I*4	--	Number of groups
NORONP	I*4	--	1 if vector calculation, NGROUP if matrix calculation
NCSCSP	I*4	--	Number of cross-sections

2. Common Blocks

/SIMFLP/

Variables used from this common block

Name	Type	Definition
PAR	R*8	The critical reactor dimension (cm)

/SIMINT/

Variables used from this common block

Name	Type	Definition
NCSCS	I*4	Number of cross sections
NGROUP	I*4	Number of groups
NUMOI	I*4	Counter for number of outer iterations
NUMCMP	I*4	Number of compositions
IPROB	I*4	Type of problem: 1 = Inhomogeneous, 2 = k_{eff} calculation, 3 = Concentration search, 4 = Buckling search, 5 = α search, 6 = Dimension search

/NAMES2/

Variables used from this common block

Name	Type	Definition
DCHIM	R*8	Variable name for the array of the χ which is used during the calculation
DCHI	R*8	Variable name for the array of the original χ

/SIMIN3/

Variables used from this common block

Name	Type	Definition
NORONE	I*4	NGROUP for matrix calculation, 1 for vector calculation
MKRSET	I*4	Fission spectrum flag

/PRSTAR/

Variables used from this common block

Name	Type	Definition
PRSTAR	R*8	Modifier for calculating final cross-section used during concentration search
LCM	I*4	Number of compositions to be modified

/NAMES/

Variables used from this common block

Name	Type	Definition
DCSC	R*8	Variable name for array of the cross-sections

3. Local Variables

Name	Type	Definition
INDFFC	I*4	Fission block of composition to be modified
C	I*4	Composition to be modified

Name	Type	Definition
CPRIME	I*4	Composition modifying C
PPAR	R*8	Modified PAR
INDCPR	I*4	Absolute value of the composition index of the composition modifier
INDC	I*4	Composition index of composition to be modified
INDFCP	I*4	Fission block of composition modifier
PARSTR	R*8	Composition cross-section modifier for given search pass

4. Functions and tasks performed by this subroutine

This subroutine modifies the composition cross-sections for concentration searches.

The number of the composition to be modified (MODCMP) and the number of the pseudo-composition modifying it (CMPMOD) are found.

The eigenvalue modifier PARSTR is computed. (Note PARSTR is equal to PAR before the first outer iteration and is PAR-PPAR thereafter.)

The indices of the block of composition cross-sections corresponding to the composition to be modified and to the pseudo-composition modifier are found.

If the index of MODCMP is negative, the composition has anisotropic scattering and MKRSCT is set equal to 2.

The indices of the fission spectra of MODCMP(INDFFC) and CMPMOD(INDFCP) are found.

The elements of the composition χ-matrix $[\chi^c_{j,k}]$ are modified according to the formula

$$\chi^c_{j,k} = [(\nu\sigma_f)^c_j \chi^c_{j,k} + \mathrm{PARSTR}(\nu\sigma_f)^{c'}_j * \chi^{c'}_{j,k}] / (\nu\sigma_f)^{c*}_j$$

where c denotes the composition to be modified, c' denotes the corresponding pseudo-composition, and PARSTR is the current value of the modifier.

Here c* denotes the modified cross-section which has been modified by the formula below.

The cross-sections σ_f, σ_a, $\nu\sigma_f$, σ_t, and $\sigma_{j\to k}$ are modified as

$$(\sigma)_j^c = (\sigma)_j^c + \text{PARSTR*}\ (\sigma)_j^{c'} .$$

If the anisotropic scattering flag (MKRSCT) indicates anisotropic scattering present (MKRSCT > 1) and the pseudo-composition has anisotropic scattering (CMPNDX(CPRIME) < 0), the cross-section modification is executed again. In this case isotropic cross-sections are modified on the first pass and the anisotropic cross-sections on the second pass.

5. Subprograms called by this subroutine

DUMP (entry in POINTR)

6. Subprograms calling this subroutine

ONEDDC
READ (entry in ONEDDC)

7. Error messages generated by this subroutine - None

Subroutine CLEARF (D, N)

Entry Points

Entry CLEARI (K,N)

1. Arguments

Name	Type	Dimension	Definition
D	R*8	N	The R*8 array to be cleared
N	I*4	--	Length of the array to be cleared
K	I*4	N	The I*4 array to be cleared

2. Common Blocks - None

3. Local Variables - None

4. Functions and tasks performed by this subroutine

The purpose of this subroutine is to clear (zero out) an array D, of some length N, which is passed through the argument list of the routine. This releases storage for other uses during the calculation. The array passed through the argument list must be REAL*8. The entry point CLEARI(K,N) allows integer arrays to be passed to this routine for clearing.

5. Subprograms called by this subroutine - None

6. Subprograms calling this subroutine

CLEARF is called by COMZER

CLEARI is called by COMZER

7. Error messages generated by this subroutine - None

Subroutine CMPFLG (M, K, NUMREG, INPCR, INPBIC, NCBLKS, MC, NCMP)

1. Arguments

Name	Type	Dimension	Definition
M	I*4	--	Composition number search for
K	I*4	--	0 (1) if M is not (is) the composition index array
NUMREG	I*4	--	Number of regions
INPCR	I*4	NUMREG	Composition-to-region correspondence
INPBIC	I*4	NCMP	Composition blocks
NCBLKS	I*4	--	Number of composition blocks
MC	I*4	NUMCMP	Composition number of pseudo-composition assigned to each composition
NCMP	I*4	--	Number of compositions

2. Common Blocks - None

3. Local Variables - None

4. Functions and tasks performed by this subroutine

This subroutine determines whether or not a composition from data set XS.C.MIN is needed (i.e., whether or not INPCR(I) contains the composition number). INPBIC(M) is the block number of the isotropic component of composition M. NCBLKS is the counter used to build INPBIC(M). INPCR(I) is the composition number used for region I, as dictated by data set GEOM. K is returned as 0 (1) if M is not (is) in INPCR(I).

5. Subprograms called by this subroutine - None

6. Subprograms calling this subroutine

READXS

7. Error messages generated by this subroutine - None

Subroutine COMZER

1. Arguments - None

2. Common Blocks

/BUFFER/

Variables used from this common block

Name	Type	Definition
B	I*4	Dummy variable for clearing the common blocks

/EXTPNT/

Variables used from this common block

Name	Type	Definition
J	I*4	Dummy variable for clearing common blocks

/EXTPT2/

Variables used from this common block

Name	Type	Definition
K	I*4	Dummy variable for clearing the common blocks

/POINT/

Variables used from this common block

Name	Type	Definition
L	I*4	Dummy variable for clearing common blocks

/SIMFLP/

Variables used from this common block

Name	Type	Definition
D	R*8	Dummy variable for clearing the common blocks

/SIMINT/

Variables used from this common block

Name	Type	Definition
M	I*4	Dummy variable for clearing the common blocks

/SIMIN2/

Variables used from this common block

Name	Type	Definition
N	I*4	Dummy variable for clearing the common blocks

/SIMIN3/

Variables used from this common block

Name	Type	Definition
II	I*4	Dummy variable for clearing the common blocks

/SIMIN4/

Variables used from this common block

Name	Type	Definition
JJ	I*4	Dummy variable for clearing the common blocks

/TIMER/

Variables used from this common block

Name	Type	Definition
C	R*4	Dummy variable for clearing the common blocks

3. Local Variables - None

4. Functions and tasks performed by this subroutine

This subroutine zeroes out the common blocks of this module.

5. Subprograms called by this subroutine

CLEARF
CLEARI (entry in CLEARF)

6. Subprograms calling this subroutine

PROCDS

7. Error messages generated by this subroutine - None

Subroutine CONVRG

1. Arguments - None

2. Common Blocks

/SIMFLP/

Variables used from this common block

Name	Type	Definition
EPS	R*8	Convergence criterion for a source or k_{eff} calculation
PAR	R*8	The critical reactor dimension (cm)
RATFIS	R*8	Fission ratio
EPSFIS	R*8	Convergence criterion for the fission source
FACCNV	R*8	A convergence criterion factor
RATFIO	R*8	Outer LAMBDA
EPSOTR	R*8	Convergence criterion for a source or k_{eff} calculation
RATSCT	R*8	Ratio for the scattering

/SIMINT/

Variables used from this common block

Name	Type	Definition
IMKCON	I*4	Converged pass flag for outer iterations
IMKCVG	I*4	Convergence flag for inner iterations
IPROB	I*4	Type of problem: 1 = Inhomogeneous, 2 - k_{eff} convergence, 3 = Concentration search, 4 = Buckling search, 5 = α search, 6 = Dimension search
MAXUPG	I*4	Number of groups which have upscattering
NUMOI	I*4	Counter for number of outer iterations
NUMKIM	I*4	χ matrix indicator

Name	Type	Definition
NINTI	I*4	Number of intervals
NUMKIV	I*4	χ vector indicator

3. Local Variables

Name	Type	Definition
V4	R*8	(RATFIO - RATFIS)
U2	R*8	NINTI
V2	R*8	(1.0 - RATFIS)
V3	R*8	.5*(1.0 - RATSCT)

4. Functions and tasks performed by this subroutine

This subroutine calculates the absolute value of the difference between 1.0 and the fission ratio and determines the convergence criteria for a source or k_{eff} calculation. It also calculates the absolute value of the difference between outer lambda and the fission ratio. The convergence flags IMKCON and/or IMKCVG are set (depending on the problem type and convergence condition) to indicate whether the problem has converged.

If the problem is inhomogeneous a check is made to determine if it has fission. If it does not have upscattering or fission fractions present and the outer iteration count is equal to one, IMKCVG is set to 1 and we return; otherwise, convergence tests are made and IMKCVG and/or IMKCON are set and control is returned to the routine which called CONVRG.

5. Subprograms called by this subroutine - None

6. Subprograms calling this subroutine

ONEDTR
MNTR (entry in ONEDTR)

7. Error messages generated by this subroutine - None

Subroutine CSCGP1 (INPCMP, INPBIC, CSCGRP, GEOVOL, CSC, CSCFAC, CSCFIS, CSCSLF, NCSCSP, NGROPP, NINTIP, NMCOMP, INPLNO)

Entry Points

Entry CSCGP

1. Arguments

Name	Type	Dimension	Definition
INPCMP	I*4	NINTIP	Composition-to-mesh correspondence
INPBIC	I*4	NMCOMP	Composition block
CSCGRP	R*8	NCSCSP	Group cross-section
GEOVOL	R*8	NINTIP	Volume elements
CSC	R*8	NCSCSP*NGROPP* NMCOMP	Cross-sections
CSCFAC	R*8	NINTIP	Density factor
CSCFIS	R*8	NINTIP	ν*fission cross-section
CSCSLF	R*8	NINTIP	Self-scattering cross-section
NCSCSP	I*4	--	Number of cross-sections
NGROPP	I*4	--	Number of groups
NINTIP	I*4	--	Number of intervals
NMCOMP	I*4	--	Number of compositions
INPLNO	I*4	NMCOMP	ℓ numbers

2. Common Blocks

/SIMINT/

Variables used from this common block

Name	Type	Definition
ISELF	I*4	Pointer for self-scattering cross-section
MKRDF	I*4	Density factor flag
NCSCS	I*4	Number of cross-sections

Name	Type	Definition
IG	I*4	Present groups
IMKSCT	I*4	Scattering flag indicating method of group cross-section calculation
INTRVL	I*4	Interval

3. Local Variables

Name	Type	Definition
K2	I*4	Composition block of the composition assigned to the interval
K3	I*4	ℓ number of the composition assigned to the interval

4. Functions and tasks performed by this subroutine

This subroutine calculates the group cross-section (CSCGRP) and sets a temporary variable (CSCFIS) for the anisotropic self-scattering cross-section if the set has anisotropic scattering. The self-scattering cross-section (isotropic and anisotropic parts = 0) for computation of the scattering source in OUTER are set in this routine also.

CSCGRP(L) = GEOVOL(INTRVL)*CSC(L,IG,K2),

and CSCGRP(L) = CSCGRP(L)*CSCFAC(INTRVL), if MKRDF $\neq$ 0.

CSCFIS(INTRVL) = CSCGRP(ISELF),

or CSCSLF(INTRVL) = CSCGRP(ISELF) if IMKSCT = 0.

Here INTRVL is the interval, L = 1,2,...,NCSCS, IG is the present group, K2 is the cross-section block, ISELF is the position of the self-scattering cross-section in the cross-section array, IMKSCT is the anisotropic scattering flag, and MKRDF is the density factor marker.

5. Subprograms called by this subroutine - None

6. Subprograms calling this subroutine

CSCGP1 is called by SETARG
CSCGP is called by OUTER (entry in OUTER1)

7. Error messages generated by this subroutine - None

Subroutine CSCIN1 (INPCMP, CSCINT, CSC, CSCFAC, CHGTIM, CSCTMP, NCSCSP, NGROPP, NINTIP, NMCOMP, INPBIC, BSQ, MR, NREG)

Entry Points

Entry CSCIN

1. Arguments

Name	Type	Dimension	Definition
INPCMP	I*4	NINTIP	Composition-to-mesh correspondence
CSCINT	R*8	NINTIP	Input cross-sections
CSC	R*8	NCSCSP*NGROPP* NMCOMP	Cross-sections
CSCFAC	R*8	NINTIP	Density factor
CHGTIM	R*8	NINTIP	Time absorption factor used to modify the total cross-section in an α calculation
CSCTMP	R*8	NINTIP	Buckling correction of the total cross-section
NCSCSP	I*4	--	Number of cross-sections
NGROPP	I*4	--	Number of groups
NINTIP	I*4	--	Number of intervals
NMCOMP	I*4	--	Number of compositions
INPBIC	I*4	--	Composition block
BSQ	R*8	NREG*NIL	Buckling in first and second transverse directions
MR	I*4	NINTIP	Region-to-mesh correspondence
NREG	I*4	--	Number of regions

2. Common Blocks

/SIMINT/

Variables used from this common block

Name	Type	Definition
IG	I*4	Present group

Name	Type	Definition
ITOTAL	I*4	Position of total source
ITYPE	I*4	Type of cross-section indicator
MKRDF	I*4	Density factor flag
NIL	I*4	Number of finite directions (integration limits per region)
NINTI	I*4	Number of intervals

3. Local Variables

Name	Type	Definition
K1	I*4	Composition block of the composition assigned to interval I
U1	R*8	Buckling/3.*CSCINT(1)

4. Functions and tasks performed by this subroutine

This routine sets the temporary variables for the cross-sections to be used in the calculations. It also multiplies the cross-sections by their respective density factors, if necessary.

The correction for axial leakage (buckling correction) is made in this routine.

If NIL $\neq$ 0

U1 = BSQ(ITEMP,1)/(3.*CSCINT(I)),

and if NIL > 1

U1 = U1 + BSQ(ITEMP,2)/(3.*CSCINT(I))

and

CSCTMP(I) = U1 + CHGTIM(IG).

Finally,

CSCINT(I) = CSCINT(I) + CSCTMP(I).

CSCINT is the input cross-section, where BSQ(ITEMP,1) and BSQ(ITEMP,2) are the buckling in the first and second transverse directions, respectively. CSCTMP is the correction added to our working cross-section (CSCINT). NIL is number of finite directions. CHGTIM is the time absorption factor used to modify the total cross-section in an α calculation.

5. Subprograms called by this subroutine - None

6. Subprograms calling this subroutine

CSCIN1 is called by SETARG
CSCIN is called by FISION (entry in FSORCE)
OUTER (entry in OUTER1)

7. Error messages generated by this subroutine - None

Subroutine DTSIM1 (SRCISO, GEOA, VSUR1, VSUR2, CSCREM, CSCTOT, CSCSLF, CSCSFA, CSCCOR, GEOAAV, FLXA, SRCA, FLXS, ELKRIT, ELKNET, CUR, FLXAIN, FLXAO, RECQPB, RECFPB, NINTIP, NPTSIP, NGROPP, NMDIRP, IVERT)

Entry Points

Entry DTSIM

1. Arguments

Name	Type	Dimension	Definition
SRCISO	R*8	NINTIP	Isotropic source
GEOA	R*8	NINTIP	Area element
VSUR1	R*8	NGROPP*NVEDGE	Isotropic surface source component
VSUR2	R*8	NGROPP*NVEDGE	Anisotropic surface source component
CSCREM	R*8	NINTIP	1/2 total cross section less self-scattering cross section
CSCTOT	R*8	NINTIP	Total cross section
CSCSLF	R*8	NINTIP	Self-scattering cross section
CSCSFA	R*8	NINTIP	Anisotropic self-scattering cross section
CSCCOR	R*8	NINTIP	1.5 (total cross section - CSCSFA)
GEOAAV	R*8	NINTIP	Average volume element
FLXA	R*8	NPTSIP*NMDIRP	Angular flux
SRCA	R*8	NINTIP	Anisotropic source
FLXS	R*8	NINTIP	Scalar flux
ELKRIT	R*8	NGROPP	Right leakage
ELKNET	R*8	NGROPP	Net leakage
CUR	R*8	NINTIP*NGROPP	Current
FLXAIN	R*8	NMDIRP	Incoming angular flux
FLXAO	R*8	NMDIRP	Outgoing angular flux

Name	Type	Dimension	Definition
RECQPB	R*8	NMDIRP	Auxiliary function used to determine recursion relation for currents
RECFPB	R*8	NMDIRP	Auxiliary function used to determine recursion relation for angular flux
NINTIP	I*4	--	Number of intervals
NPTSIP	I*4	--	Number of mesh lines
NGROPP	I*4	--	Number of groups
NMDIRP	I*4	--	Number of directions
IVERT	I*4	NPTSIP	Surface source position indicator

2. Common Blocks

/SIMINT/

Variables used from this common block

Name	Type	Definition
MKRSHL	I*4	Shell source marker
NPTSI	I*4	Number of points
IG	I*4	Present group
MKRLB	I*4	Left boundary condition marker
NVEDGE	I*4	Number of surface (shell) sources
MKRRB	I*4	Right boundary condition marker
NINTI	I*4	Number of intervals
NUMDIR	I*4	Number of directions

3. Local Variables

Name	Type	Definition
T1	R*8	Denominator of the angular flux calculation in the diffusion theory system consistent with linear anisotropic scattering

Name	Type	Definition
T5	R*8	Temporary variable used to calculate the angular flux in the diffusion theory system consistent with linear anisotropic scattering
T2	R*8	Temporary variable used to calculate the angular flux in the diffusion theory system consistent with linear anisotropic scattering
T3	R*8	Temporary variable used to calculate the angular flux in the diffusion theory system consistent with linear anisotropic scattering
T4	R*8	Temporary variable used to calculate the angular flux in the diffusion theory system consistent with linear anisotropic scattering

4. Functions and tasks performed by this subroutine

If the diffusion theory option is specified in the module-dependent input, this routine is entered and the following calculations, consistent with linear anistropic scattering, on the diffusion theory system are made.

(1) Source is calculated for the current group.

(2) The coefficients for the recursion formulae are generated.

(3) The starting values for the outer boundary are set up.

(4) The inward sweep is made, computing FLXA(I,1) and FLXA(I,2) for all mesh points I, where FLXA(I,1) is the transformation variable stabilizing the recurrence relations for the neutron flux and current in the diffusion theory option and FLXA(I,2) is the transformation variable used in the option. The quantities FLXA(I,1) and FLXA(I,2) are evaluated at each mesh point proceeding inward (right to left) from the right boundary, with FLXA (NPTSI,2) = 0; FLXA(NPTSI,1) = $\sqrt{3}/3$ at the boundary for a free right boundary or FLXA(NPTSI,1) = 0 for either the reflective or periodic right boundary.

(5) The starting values for the inner boundary are determined.

(6) The scalar flux at each interval is calculated proceeding from the left boundary outward. The starting values at the left boundary are FLXA(1,3) = FLXA(1,2)/(FLXA(1,1) + $\sqrt{3}/3$) if the left boundary is free, or

FLXA(1,3) = FLXA(1,2)/FLXA(1,1) if it is reflective or periodic, where FLXA(1,1) and FLXA(1,2) are defined as before. The scalar flux at a mesh point is then calculated as the average of the scalar flux over the interval. When the boundary conditions are periodic the FLXA and scalar flux values are adjusted for each mesh point, proceeding inward from the right boundary and then outward from the left boundary respectively.

(7) The leakage terms and the currents are calculated for each interval.

(8) Finally the angular flux components are determined and the boundary fluxes are saved.

5. Subprograms called by this subroutine - None

6. Subprograms calling this subroutine

DTSIM1 is called by SETARG
DTSIM is called by OUTER (entry in OUTER1)

7. Error messages generated by this subroutine - None

Subroutine EXEC

1. Arguments - None

2. Common Blocks

/SIMFLP/

Variables used from this common block

Name	Type	Definition
STABMX	R*8	Maximum balance error
STABER	R*8	Balance error

/SIMINT/

Variables used from this common block

Name	Type	Definition
IMKPAR	I*4	Flag which determines if monitor line is to be printed, if another pass is to be made, or if we should enter the final print routine
IXXBER	I*4	Indicates the number of times the neutron balance has exceeded the inner loop convergence criterion
MAXOI	I*4	Maximum number of outer iterations
IMKCVG	I*4	Convergence flag
IPROB	I*4	Type of problem: 1 = Inhomogeneous 2 = k_{eff} convergence 3 = Concentration 4 = Buckling search 5 = α search 6 = Dimension search
NUMAFP	I*4	Loop count
NUMOI	I*4	Counter for number of outer iterations

3. Local Variables - None

4. Functions and tasks performed by this subroutine

This routine is a control routine for the SN calculation. It initializes STABER, STABMX, IXXBER, and NUMAFP to xero and makes the following calls:

ONEDDC;
ONEDTR;

$$\left.\begin{array}{l}\text{MNTR if IMKCVG} = 0\\ \text{Returns to SNARC if IMKCVG} < 0\\ \text{ONEDCC if IMKCVG} > 0\end{array}\right\};$$

$$\left.\begin{array}{l}\text{Returns if outer iteration maximum is exceeded or if IMKPAR} < 0\\ \text{MNTR if IMKPAR} = 0\\ \text{Tests IPROB if IMKPAR} > 0\end{array}\right\};$$

$$\left.\begin{array}{l}\text{RED if IPROB} = 3\\ \text{MODI if IPROB} \neq 3\end{array}\right\}.$$

5. Subprograms called by this subroutine

ONEDDC
ONEDTR
MNTR (entry in ONEDTR)
ONEDDC
RED (entry in ONEDDC)
MODI (entry in ONEDDC)

6. Subprograms calling this subroutine

SNARC1

7. Error messages generated by this subroutine - None

Subroutine FINDGP (K, MKRSKP, IG, MKR)

1. Arguments

Name	Type	Dimension	Definition
K	I*4	--	Decides if MKRSKP contains the present group
MKRSKP	I*4	MKR	Table of groups to be skipped
IG	I*4	--	Present group
MKR	I*4	--	Gives number of groups for which group skipping or diffusion theory option is to be used

2. Common Blocks - None

3. Local Variables - None

4. Functions and tasks performed by this subroutine

This routine determines if IG is in MKRSKP(I) and returns with a flag K = 1 if IG is in MKRSKP(I) and returns with K = 0 if IG is MKRSKP(I).

5. Subprograms called by this subroutine - None

6. Subprograms calling this subroutine

OUTER (entry in OUTER1)

7. Error messages generated by this subroutine - None

Subroutine FPRNT1 (CSC, CSCFAC, SRCFI, FISRAT, GEORAD, STANB, GEOAVR, INPREG, INPCMP, FLXINP, GEOVOL, U, IXXII, IXXIIL, IXXNB, NCSCSP, NGROPP, NMCOMP, NINTIP, NPTSIP, NGRPP, NMREGP, INPBIC)

Entry Points

Entry FPRINT

1. Arguments

Name	Type	Dimension	Definition
CSC	R*8	NCSCSP*NGROPP*NMCOMP	Cross sections
CSCFAC	R*8	NINTIP	Density factors
SRCFI	R*8	NINTIP*NGROPP	Fission neutrons
FISRAT	R*8	NINTIP	Fission rate
GEORAD	R*8	NPTSIP	Radii to be modified
STANB	R*8	NGRPP	Neutron balance
GEOAVR	R*8	NINTIP	Midpoint of the Ith interval
INPREG	I*4	NINTIP	Region-to-mesh correspondence
INPCMP	I*4	NINTIP	Composition-to-mesh correspondence
FLXINP	R*8	NINTIP*NGROPP	Scalar flux
GEOVOL	R*8	NINTIP	Volume element
U	R*8	NMREGP	Sum of fission rates

Name	Type	Dimension	Definition
IXXII	I*4	NGROPP	Number of times the inner iteration maximum has been exceeded for each group
IXXIL	I*4	NGROPP	Number of times the inner iteration maximum has been exceeded for each group for the last outer iteration
IXXNB	I*4	NGROPP	Number of times the neutron balance has exceeded the inner loop convergence criteria
NCSCSP	I*4	--	Number of cross sections
NGROPP	I*4	--	Number of groups
NMCOMP	I*4	--	Number of compositions
NINTIP	I*4	--	Number of intervals
NPTSIP	I*4	--	Number of mesh lines
NGRPP	I*4	--	Number of groups + 1
NMREGP	I*4	--	Number of regions
INPBIC	I*4	NMCOMP	Composition blocks

2. Common Blocks

/SIMFLP/

Variables used from this common block

Name	Type	Definition
EPS	R*8	Convergence criterion for a source or k_{eff} calculation
PAR	R*8	The critical reactor dimension (cm)
RATFIS	R*8	Fission ratio
RATSL	R*8	Difference between the Pth value and the initial value of the critical parameter, divided by the corresponding change in LAMBDA
STABMX	R*8	Maximum balance error

Name	Type	Definition
EPSFIS	R*8	Convergence criterion for the fission source
STABER	R*8	Balance error

/SIMINT/

Variables used from this common block

Name	Type	Definition
IXXBER	I*4	Indicates the number of times the neutron balance exceeded inner loop convergence criterion
MKRDF	I*4	Density factor flag
NPTSI	I*4	Number of mesh lines
NUMLIN	I*4	Line counter
NUMREG	I*4	Number of regions
NGROUP	I*4	Number of groups
NUMAFP	I*4	Loop count
NUMOI	I*4	Counter for number of outer iterations
ITOTAL	I*4	Position of total source
NGRPP1	I*4	Number of groups + 1
NUMKIM	I*4	χ matrix indicator
IPROB	I*4	Type of problem: 1 = Inhomogeneous 2 = k_{eff} convergence 3 = Concentration search 4 = Buckling search 5 = α search 6 = Dimension search

Name	Type	Definition
MKRTHY	I*4	Solution type marker (adjoint or real)
NINTI	I*4	Number of intervals

/TIMER/

Variables used from this common block

Name	Type	Definition
TI	R*4	Previous clock time
TIME	R*4	Present clock time

/DSRNOS/

Variables used from this common block

Name	Type	Definition
NOUT	I*4	DSRN for output data set

3. Local Variables

Name	Type	Definition
K4	I*4	
K5	I*4	'GROUP NUMBER'
K6	I*4	
K7	I*4	
K1	I*4	Used for indexing
U1	R*8	Temporary variable for flipping flux vector for final printout or for accumulating sum of the fission ratio
K11	I*4	Composition block of the ITH regional composition
EXCESS	R*8	The average excess of the number of times the neutron balance exceeded the inner loop convergence criterion
TIDECR	R*4	Problem time in minutes

Name	Type	Definition
K	I*4	Used for indexing
K2	I*4	Used for indexing
K12	I*4	Temporary variable for the region of the Ith interval
TIPREV	R*4	Previous clock time
K3	I*4	Used for indexing
FISCSC	R*8	Fission cross section

4. Functions and tasks performed by this subroutine

This routine is the printed output routine, which produces the final print information for the user. The flux vector is flipped if we have performed an adjoint calculation. The information which is printed out by this routine is the following:

(1) The fission rate summary is printed, showing fission rate by interval, the sum for each region, and the total fission rate.

(2) The fission neutron density from parent groups is given with respect to interval number and average radius.

(3) The fission neutron density is given for each interval and the average radius of the interval is indicated.

(4) The final flux print is given by group for every interval showing the average radius.

(5) A final monitor print is provided showing the outer iteration count, total loop count, neutron balance, epsilon, eq., lambda, fission change, eigenvalue, and time elapsed in minutes since the last monitor print.

(6) The number of times the neutron balance has exceeded the inner loop convergence criterion, along with the average and maximum excess, is shown.

(7) The number of times the inner iteration maximum has been exceeded for each group, the number of times the inner iteration maximum has been exceeded for each group since the last outer iteration, and the number of times the neutron balance has exceeded the inner loop convergence criterion for each group is printed out.

(8) Finally, total problem time is printed out.

5. Subprograms called by this subroutine

IPRINT
NUPAGE
CLOCK (IBM routine)

6. Subprograms calling this subroutine

FPRNT1 is called by SETARG
FPRINT is called by SNARC1

7. Error messages generated by this subroutine - None

Subroutine FSORCE (CUR, CSC, CSCFAC, INPFBC, SRCFI, SRCFG, SRCFXD, CHIM, INPBIC, INPCMP, FLXINP, CSCINT, FLXSTR, GEOVOL, NMDIRP, NINTIP, NGROPP NCSCSP, NMCMPP, NGRPP, NORONP, NFBLKP, NCBLKP)

Entry Points

Entry FISION

1. Arguments

Name	Type	Dimension	Definition
CUR	R*8	NINTIP*NGROPP	Current
CSC	R*8	NCSCSP*NGROPP* NCBLKP	Cross sections
CSCFAC	R*8	NINTIP	Density factors
INPFBC	I*4	NMCMPP	Fission blocks
SRCFI	R*8	NINTIP*NORONP	Fission neutrons in the Ith interval and the Jth group
SRCFG	R*8	NGRPP	Source for group J
SRCFXD	R*8	NGRPP	Sum of the normalized distributed source in group J

Name	Type	Dimension	Definition
CHIM	R*8	NORONP*NGROPP* NFBLKP	Fission spectrum used during the calculation
INPBIC	I*4	NMCMPP	Composition blocks
INPCMP	I*4	NINTIP	Composition-to-mesh correspondence
FLXINP	R*8	NINTIP*NGROPP	Scalar flux
CSCINT	R*8	NINTIP	Input cross-section array
FLXSTR	R*8	NMDIRP*NGROPP	The previous value of FLXS during a calculation
GEOVOL	R*8	NINTIP	Volume element
NMDIRP	I*4	--	Number of directions
NINTIP	I*4	--	Number of intervals
NGROPP	I*4	--	Number of groups
NCSCSP	I*4	--	Number of cross sections
NMCMPP	I*4	--	Number of compositions
NGRPP	I*4	--	Number of groups + 1
NORONP	I*4	--	1 if vector, NGROUP if matrix
NFBLKP	I*4	--	Number of fission blocks
NCBLKP	I*4	--	Number of composition blocks

2. Common Blocks

/SIMFLP/

Variables used from this common block

Name	Type	Definition
CONNF	R*8	Normalization factor
EPS	R*8	Convergence criterion for a source or k_{eff} calculation
RATFIS	R*8	Fission ratio

Name	Type	Definition
EPSFIS	R*8	Convergence criterion for the fission source
FACCNV	R*8	A convergence criterion factor
EPSG	R*8	Net loop convergence criterion
RATFIO	R*8	Outer LAMBDA
RATFPR	R*8	Previous fission total

/SIMINT/

Variables used from this common block

Name	Type	Definition
IMKFIC	I*4	Integer flag which determines if fission radius is to be recalculated
MKRDF	I*4	Density factor flag
MKRGES	I*4	Input function marker
IG	I*4	Present group
NGROUP	I*4	Number of groups
ITOTAL	I*4	Position of total source
MKRRB	I*4	Right boundary condition marker
NGRPP1	I*4	Number of groups + 1
NUMKIM	I*4	χ matrix indicator
IPROB	I*4	Type of problem: 1 = Inhomogeneous 2 = k_{eff} convergence 3 = Concentration search 4 = Buckling search 5 = α search 6 = Dimension search
ITYPE	I*4	Type of cross-section source
MKRSCT	I*4	Scattering type marker
MKRTHY	I*4	Solution type marker (adjoint or real)
NINTI	I*4	Number of intervals

Name	Type	Definition
NUMDIR	I*4	Number of directions
NUMKIV	I*4	χ vector indicator

/SIMIN3/

Variables used from this common block

Name	Type	Definition
NFBLKS	I*4	Number of fission blocks
NORONE	I*4	Number of groups for matrix calculation, 1 for vector calculation

/NAMES/

Variables used from this common block

Name	Type	Definition
DSRCFG	R*8	Name of array of the fission source
DCSC	R*8	Name of array of the cross sections
DSRCFI	R*8	Name of array of the fission neutrons

/NAMES2/

Variables used from this common block

Name	Type	Definition
DCHIM	R*8	Name of the array of the χ which is used during the calculation

3. Local Variables

Name	Type	Definition
U1	R*8	Temporary storage location for various fission sources
K2	I*4	The fission block of the Ith interval's composition
U2	R*8	Used to calculate group convergence criteria

Name	Type	Definition
K3	I*4	Composition block of the Ith interval's composition
U3	R*8	Fission cross section * density factor

4. Functions and tasks performed by this subroutine

This subroutine computes the fission source for the problem to be solved. The preliminary calculation of the fission neutrons is ignored if SRCFI is input.

The previously computed fission source is saved and the density factor (CSCFAC) of the Ith interval is multiplied by $\nu\sigma_f$ of the Ith interval of the Jth group. Thus, fission neutrons for the Ith interval and the Jth group or fission neutrons for the Ith interval are computed as follows:

(a) For a fission vector the fission neutron calculation is

$$\text{SRCFI(I)} = \begin{cases} \sum_K \left(\nu \cdot \sigma_f\right)_{I,K} \text{*FLXINP(I,K), real case; or} \\ \sum_J \chi_{I,J} \text{*FLXINP(I,J), adjoint case,} \end{cases}$$

where $\left(\nu\sigma_f\right)_{I,K}$ is $U_3 = \left(\nu\sigma_f\right)_{I,K}$ *CSCFAC(I) in the routine.

FLXINP(I,K) is the scalar flux in interval I, group K.
FLXINP(I,J) is the scalar flux in interval I, group J.
$\chi_{I,J}$ is the fission spectrum in interval I, group J.

(b) For a fission matrix the calculation is

$$\text{SRCFG(I,J)} = \begin{cases} \left(\nu\sigma_f\right)_{I,J} \text{*FLXINP(I,J), real case; or} \\ \sum_K \chi_I(J,K) \text{*FLXINP(I,K), adjoint case,} \end{cases}$$

where $\left(\nu\sigma_f\right)_{I,J}$, FLXINP(I,J), and FLXINP(I,K) are defined as above. $\chi_I(J,K)$ is the "adjointed" fission spectrum matrix.

The completion of the fission source calculation is performed utilizing the following representation for the fission source of the Ith interval and the Jth group:

(a) For a χ fission matrix,

$$\text{SRCFG}(I,J) = \begin{cases} V(I)^* \sum_K \chi_I(K,J)^*\text{SRCFI}(I,K), \text{ real case; or} \\ V(I)^*\left(\nu\sigma_f\right)_{I,J}{}^*\text{SRCFI}(I,J), \text{ adjoint case,} \end{cases}$$

where V(I) is the volume element of the Ith interval (GEOVOL in the code) and $\chi_I(K,J)$, $\left(\nu\sigma_f\right)_{I,J}$, SRCFI(I,K), and SRCFI(I,J) are defined as above.

(b) For χ fission vector,

$$\text{SRCFG}(I,J) = \begin{cases} V(I)^*\chi(I,J)^*\text{SRCFI}(I), \text{ real case; or} \\ V(I)^*\left(\nu\sigma_f\right)_{I,J}{}^*\text{SRCFI}(I), \text{ adjoint case.} \end{cases}$$

Total fission source is then

$$\text{SRCFG}(J) = \sum_I \text{SRCFG}(I,J)$$

The fission ratio is calculated in this routine as

$$\text{RATFIS} = \frac{\text{SRCFXD(NGRPP1)} + \text{SRCFG(NGRPP1)}}{\text{SRCFG(NGRPP1)}_p + \text{SRCFXD(NGRPP1)}},$$

where

SRCFXD(NGRPP1) is the total normalized distributed source,

SRCFG(NGRPP1) is the fission source total (sum over all groups), and

SRCFG(NGRPP1)_p is the fission source total from the previous iteration.

If a flux convergence (k_{eff}) problem is being solved, the quantities SRCFG(I,J) and $\chi_I(J,K)$ $\left[\text{or } \chi_{I,J}, \left(\nu\sigma_f\right)_{I,J} \text{ in an adjoint case}\right]$ are divided by the fission ratio (RATFIS) and restored.

For all problems except source calculations (IPROB = 1, or CONNF $\leq$ 0) the following quantities are "normalized" by multiplying them by the normalization factor divided by SRCFG(NGRPP1):

SRCFG(J)	(J = 1, 2, . . ., NGRPP1)
FLXINP(I,J)	(I = 1, 2, . . ., NINTI), (J = 1, 2, . . ., NGROUP)
CUR(I,J)	(I = 1, 2, . . ., NINTI), (J = 1, 2, . . ., NGROUP)
SRCFI(I) or SRCFI(I,J)	(I = 1, 2, . . ., NINTI), (J = 1, 2, . . ., NORONE)
FLXSTR(M,J)	(M = 1, 2, . . ., NUMDIR), (J = 1, 2, . . ., NGROUP)

The routine finally computes the group convergence criterion EPSG to be used in the inner iteration:

```
EPSG=(4.0*EPS*(SRCFXD(NGRPP1)+SRCFG(NGRPP1))/FLOAT(NGROUP+3) ,
```

where EPS is one of the input convergence criteria depending on the type of problem. FLOAT means to convert (NGROUP+3) into a real number from an integer quantity.

5. Subprograms called by this subroutine

DUMP (entry in POINTR)
CSCIN
ARCERR

6. Subprograms calling this subroutine

FSORCE is called by SETARG
FISION is called by ONEDTR

7. Error messages generated by this subroutine

ERROR IN MODULE NUCOO3 ± nnnnn

where ± nnnnn is

Message No.	Reason
-22001	The sum of the previous fission total and the normalized inhomogeneous source is less than or equal to zero.
-22002	The sum of the normalized fission source is less than or equal to zero.

Subroutine FXDSC1 (SRCFXD, GEOVOL, SRCDIS, NGRPP, NINTIP, NGROPP)

Entry Points

Entry FXDSRC

1. Arguments

Name	Type	Dimension	Definition
SRCFXD	R*8	NGROPP+1	Sum of the normalized distributed source in group J
GEOVOL	R*8	NINTIP	Volume element
SRCDIS	R*8	NINTIP*NGROPP	Distributed source
NGRPP	I*4	--	Number of groups + 1
NINTIP	I*4	--	Number of intervals
NGROPP	I*4	--	Number of groups

2. Common Blocks

/SIMFLP/

Variables used from this common block

Name	Type	Definition
CONNF	R*8	Normalization factor

/SIMINT/

Variables used from this common block

Name	Type	Definition
MKRDIS	I*4	Distributed source indicator
NGROUP	I*4	Number of groups
NUMOI	I*4	Counter for number of outer iterations
NGRPP1	I*4	Number of groups + 1
IPROB	I*4	Type of problem: 1 = Inhomogeneous 2 = k_{eff} calculation 3 = Concentration search 4 = Buckling search

Name	Type	Definition
		5 = α search 6 = Dimension search
NINTI	I*4	Number of intervals
U1	R*8	Normalization factor divided by total normalized distributed source

4. Functions and tasks performed by this subroutine

This subroutine normalizes the distributed source, if specified, in the following manner:

$$\text{SRCFXD(J)} = \sum_{I} \text{V(I)*SRCDIS(I,J)}$$

$$\text{SRCFXD(NGRPP1)} = \sum_{J} \text{SRCFXD(J)}$$

SRCFXD(J) is the normalized distributed source for a group J, V(I) is the volume element for the Ith interval, SRCDIS(I,J) is the normalized input distributed source, and SRCFXD(NGRPP1) is the total normalized distributed source.

The following quantities are then normalized, if prescribed, by multiplying them by the normalization factor (CONNF) divided by SRCFXD(NGRPP1), and restored:

SRCDIS(I,J),
SRCFXD(J), and
SRCFXD(NGRPP1).

5. Subprograms called by this subroutine

ARCERR

6. Subprograms calling this subroutine

FXDSC1 is called by SETARG
FXDSRC is called by ONEDDC
RED (entry in ONEDDC)
MODI (entry in ONEDDC)

7. Error messages generated by this subroutine

ERROR IN MODULE NUCOO3 ± nnnnn

where ± nnnnn is

Message No.	Reason
-14001	Sum of the distributed source is zero for an inhomogeneous problem for which ES.D1D is present.
-14002	Sum of the distributed source is zero for an inhomogeneous problem for which ES.D1D is present and a normalization factor is defined.

Subroutine GEOFN1 (GEOATN, GEOSAC, GEOCRV, GEOA, DIRWGI, DIRWMU, GEOAMU, DIRMU, NPTSIP, NMDIRP)

Entry Points

Entry GEOFCN

1. Arguments

Name	Type	Dimension	Definition
GEOATN	R*8	NPTSIP*NMDIRP	Geometry attenuation used in angular flux algorithm
GEOSAC	R*8	NPTSIP*NMDIRP	Sum of the geometric factors
GEOCRV	R*8	NPTSIP*NMDIRP	Curvature used in the angular flux algorithm
GEOA	R*8	NPTSIP	Area elements
DIRWGT	R*8	NMDIRP	Direction weights
DIRWMU	R*8	NMDIRP	Direction weights*cosines
GEOAMU	R*8	NPTSIP*NMDIRP	Geometric factor used in the angular flux algorithm
DIRMU	R*8	NMDIRP	Direction cosines
NPTSIP	I*4	--	Number of mesh lines
NMDIRP	I*4	--	Number of directions

2. Common Blocks

/SIMINT/

Variables used from this common block

Name	Type	Definition
NPTSI	I*4	Number of mesh lines
NUMOI	I*4	Counter for number of outer iterations
IPROB	I*4	Type of problem: 1 = Inhomogeneous 2 = k_{eff} calculation 3 = Concentration search 4 = Buckling search 5 = α search 6 = Dimension search
MKRGEO	I*4	Geometry marker
NINTI	I*4	Number of intervals
NUMDIR	I*4	Number of directions

3. Local Variables - None

4. Functions and tasks performed by this subroutine

For the initial outer iteration (outer iteration count equal to zero) and subsequent outer iterations in dimension criticality search problems, this subroutine computes the following geometric functions, for later use in the angular flux computations.

For slab geometries

GEOATN(I,M) = 2.0*|μ(M)|,

GEOCRV(I,M) = 0.0, and

GEOAMU(I,M) = |μ(M)|.

For cylindrical or spherical geometries

GEOAMU(I,M) = |μ(M)*GEOA(I)| for all M and mesh points I for μ(M) < 0;

GEOAMU(I,M) = |μ(M)|*GEOA(I+1) for μ(M) > 0.

Here

GEOAMU is the geometric factor,

μ(M) is the direction cosine, and

GEOA is the area element at the point I.

GEOATN(I,M) = |μ(M)|*(GEOA(I+1)+GEOA(I))

GEOCRV(I,M) = 0.0 if the direction weight is zero (for cylinders or spheres),

or

GEOCRV(I,M) = ((GEOA(I) - GEOA(I+1))*(DIRWMU(M)+DIRWMU(M-1)) + GEOCRV(I,M-1)*DIRWGT(M-1))/DIRWGT(M) if the weight is ≠ 0.

Note that W(0) = 0 for all geometry types.

The sum of the geometric factors is then computed as

GEOSAC(I,M) = GEOATN(I,M)+GEOCRV(I,M).

5. Subprograms called by this subroutine

ARCERR

6. Subprograms calling this subroutine

GEOFN1 is called by SETARG

GEOFCN is called by ONEDDC
RED (entry in ONEDDC)
MODI (entry in ONEDDC)

7. Error messages generated by this subroutine

ERROR IN MODULE NUCOO3 ± nnnnn

where ± nnnnn is

Message No.	Reason
-12001	A direction cosine is specified as zero. This is not allowed.
-12002	A direction weight is specified as negative. This is not allowed.
-12003	A buckling search has been specified in SP.CICN. This is not allowed.

Subroutine GEOMS1 (GEOA, GEORAD, GEOAVR, GEOVOL, NPTSIP, NINTIP)

Entry Points

Entry GEOMES

1. Arguments

Name	Type	Dimension	Definition
GEOA	R*8	NPTSIP	Area elements
GEORAD	R*8	NPTSIP	Initial radii
GEOAVR	R*8	NINTIP	Midpoint of the Ith interval
GEOVOL	R*8	NINTIP	Volume elements
NPTSIP	I*4	--	Number of mesh lines
NINTIP	I*4	--	Number of intervals

2. Common Blocks

/SIMPFLP/

Variables used from this common block

Name	Type	Definition
FOURPI	R*8	4π
TWOPI	R*8	2π
ONE	R*8	1.0
VOLFAC(3)	R*8	Volume fraction

/SIMINT/

Variables used from this common block

Name	Type	Definition
IPROB	I*4	Type of problem: 1 = Inhomogeneous 2 = k_{eff} calculation 3 = Concentration search 4 = Buckling search

Name	Type	Definition
		5 = α search 6 = Dimension search
NPTSI	I*4	Number of mesh lines
NUMOI	I*4	Counter for number of outer iterations
MKRGEO	I*4	Geometry marker
NINTI	I*4	Number of intervals

3. Local Variables - None

4. Functions and tasks performed by this subroutine

This subroutine computes the area element at a point I as a function of the geometry type:

GEOA(I) = 1.0 (slab),

GEOA(I) = 2*π*GEORAD(I) (cylinder),

or GEOA(I) = 4*π*(GEORAD(I))^2 (sphere),

The routine then computes GEOAVR(I) over the intervals (I) as

GEOAVR(I) = 0.5*(GEORAD(I+1)+GEORAD(I)).

The volume element is calculated over the intervals also, as

GEOVOL(I) = VOLFAC(MKRGEO)*(GEOA(I+1)*GEORAD(I+1)-GEOA(I)*GEORAD(I)).

5. Subprograms called by this subroutine

ARCERR

6. Subprograms calling this subroutine

GEOMS1 is called by SETARG

GEOMES is called by CNEDDC
RED (entry in ONEDDC)
MODI (entry in ONEDDC)

7. Error messages generated by this subroutine

ERROR IN MODULE NUCOO3 ± nnnnn

where ± nnnnn is

Message No.	Reason
-17001	A buckling search has been specified in data set SP.CICN. This is not allowed.

Subroutine GEOMOD (GEORAD, INPREG, INPCMP, INPCR, REG, CNAME, BSQ, NSETZ, NREGA, ZONE, AREA)

1. Arguments

Name	Type	Dimension	Definition
GEORAD	R*8	NPTSI	Radii to be modified
INPREG	I*4	NUMREG	Region-to-mesh correspondence
INPCMP	I*4	NUMREG	Composition-to-mesh correspondence
INPCR	I*4	NINTI	Composition-to-region correspondence
REG	R*8	NUMREG	Region labels
CNAME	R*8	NUMCMP	Composition labels
BSQ	R*8	NUMREG*NIL	Buckling by regions
NSETZ	I*4	NZONE	Number of sections in each zone
NREGA	I*4	NUMREG*NIL	Region-area correspondence
ZONE	R*8	NZONE	Zone labels
AREA	R*8	NAREA	Area labels

2. Common Blocks

/DSRNOS/

Variables used from this common block

Name	Type	Definition
NGEOM	I*4	DSRN for data set GEOM

3. Local Variables

Name	Type	Definition
NIL	I*4	Number of finite directions per region
NGEM	I*4	Type of geometry
NINTI	I*4	Number of intervals
NUMCMP	I*4	Number of compositions
GEOY	R*8	YMESH for GEOM.P (0.0)
NGE2	I*4	Data set reference number of modified geometry data set (GEOM.P)
NINTJ	I*4	Number of intervals in the J-direction (1)
NUMREG	I*4	Number of regions
NDIM	I*4	Number of dimensions
LZONE	I*4	Length of record type 7, data set GEOM
NPTSI	I*4	Number of mesh lines
NZONE	I*4	Number of zones
NFIN	I*4	Number of finite geometry types
LAREA	I*4	Length of record type 6, data set GEOM
NAREA	I*4	Number of areas
NPTSJ	I*4	Number of mesh lines in the J-direction
ITEMP	I*4	3*NUMREG*NIL, used as dimension for reading buckling data from record 08 of GEOM

4. Functions and tasks performed by this subroutine

This subroutine writes the new geometry data after a geometry search has been made. It reads data set GEOM, modifies the information read where necessary, and writes the new information into data set GEOM.P.

Upon completion of the writing of GEOM.P the data set reference numbers are interchanged and GEOM.P is referenced by data set reference number NGEOM. This is done to mask the writing of a new data set and prevent destroying the data on data set GEOM.

5. Subprograms called by this subroutine

SNIFF (ARC System module)

6. Subprograms calling this subroutine

PRANGF

7. Error messages generated by this subroutine - None

Subroutine GETLNO (NAMANS, LNOANS, M)

1. Arguments

Name	Type	Dimension	Definition
NAMANS	I*4	NUMCMP	Composition label for which an ℓ number is to be specified
LNOANS	I*4	NUMCMP	Anisotropic scattering order for a composition
M	I*4	--	Composition number

2. Common Blocks

/SIMIN2/

Variables used from this common block

Name	Type	Definition
MKRANS	I*4	Anisotropic scattering flag, indicating number of compositions for which the ℓ numbers are given

/SIMIN3/

Variables used from this common block

Name	Type	Definition
NUMSCT	I*4	Number of anisotropic scattering fluxes needed

3. Local Variables - None

4. Functions and tasks performed by this subroutine

This subroutine accepts a composition number, M, and returns an ℓ number, NUMSCT, which tells how many anisotropic scattering blocks are needed for this composition. NUMSCT = -1 indicates that there are no LNOANS for this composition.

LNOANS(I) = 0 if NAMANS(I) has only isotropic scattering.

LNOANS(I) = 1 if NAMANS(I) has linear anisotropic scattering.

LNOANS(I) = >1 if NAMANS(I) has higher-order scattering.

5. Subprograms called by this subroutine - None

6. Subprograms calling this subroutine

READCP

7. Error messages generated by this subroutine - None

Subroutine INNER1 (FLXA, SRCA, GEOA, GEOAMU, CUR, DIRMTS, FLXEXT, GEOATN, GEOCRV, GEOSAC, SRCGRP, FLXAIN, SRCISO, DIRMU, ELKNET, FLXS, CSCFIS, FLXAO, FLXST, ELKRIT, CSCSLF, FLXOLD, FLXAOT, VSUR1, VSUR2, SRCTA, SRCTIS, IVERT, CSCTOT, DIRWGT, DIRWMU, IXXII, IXXIIL, FLXAT, NPTSIP, NINTIP, NMDIRP, NGROPP)

Entry Points

Entry INNER

1. Arguments

Name	Type	Dimension	Definition
FLXA	R*8	NPTSIP*NMDIRP	Angular flux
SRCA	R*8	NINTIP	Anisotropic source
GEOA	R*8	NPTSIP	Area element at a point I
GEOAMU	R*8	NPTSIP*NMDIRP	Geometric factor used in angular flux calculations
CUR	R*8	NINTIP*NGROPP	Current
DIRMTS	R*8	NMDIRP	Direction mates
FLXEXT	R*8	NINTIP	External fluxes
GEOATN	R*8	NPTSIP*NMDIRP	Geometric attenuation used in angular flux algorithms
GEOCRV	R*8	NPTSIP*NMDIRP	Geometric curvature
GEOSAC	R*8	NPTSIP*NMDIRP	Volume elements
SRCGRP	R*8	NGROPP	Group source
FLXAIN	R*8	NMDIRP	Incoming angular flux
SRCISO	R*8	NINTIP	Isotropic source
DIRMU	R*8	NMDIRP	Direction cosine
ELKNET	R*8	NGROPP	Net leakage
FLXS	R*8	NINTIP	Flux for the present iteration
CSCFIS	R*8	NINTIP	ν * fission cross-section
FLXAO	R*8	NMDIRP	Outgoing angular flux

Name	Type	Dimension	Definition
FLXST	R*8	NINTIP	The previous value of FLXS
ELKRIT	R*8	NGROPP	Right leakage
CSCSLF	R*8	NINTIP	Selfscattering cross-section
FLXOLD	R*8	NINTIP	The flux from previous iteration
FLXAOT	R*8	NMDIRP	Value for outgoing angular flux before leakage
VSUR1	R*8	NGROPP*NVEDGE	Isotropic component of surface (shell) source
VSUR2	R*8	NGROPP*NVEDGE	Anisotropic component of surface source
SRCTA	R*8	NINTIP	Total anisotropic source
SRCTIS	R*8	NINTIP	Total isotropic source
IVERT	I*4	NPTSIP	Surface source position indicator
CSCTOT	R*8	NINTIP	Cross-section total
DIRWGT	R*8	NMDIRP	Direction weights
DIRWMU	R*8	NMDIRP	(Direction weights)*cosines
IXXII	I*4	NGROPP	Number of times the inner iteration maximum has been exceeded for each group
IXXIIL	I*4	NGROPP	Number of times the inner iteration maximum has been exceeded for each group for the last outer iteration
FLXAT	R*8	NPTSIP*NMDIRP	Total angular flux
NPTSIP	I*4	--	Number of mesh lines
NINTIP	I*4	--	Number of intervals
NMDIRP	I*4	--	Number of directions
NGROPP	I*4	--	Number of groups

2. Common blocks

/SIMFLP/

Variables used from this common block

Name	Type	Definition
FACABS	R*8	Sum over reactor volume of the product of the self-scattering cross-section and the absolute value of the difference in the scalar flux for two successive iterations, for group J
FACWMU	R*8	Sum of the weights and cosines
FLGAN	R*8	Anisotropic scattering flag
ELKNTT	R*8	Total flow from the botton boundary
EPSG	R*8	Net loop convergence criterion
FACDIF	R*8	Sum over-reactor volume of the product of the removal cross-section and the difference in scalar flux in two successive iterations, for group J
FLGIS	R*8	Isotropic scattering flag
ELKRTT	R*8	Total flow from the right boundary
FACSCT	R*8	Sum over reactor of the product of the self-scattering cross-section and the difference in scalar flux in two successive iterations, for group J

/SIMINT/

Variables used from this common block

Name	Type	Definition
MKRSHL	I*4	Shell source marker
NPTSI	I*4	Number of points
IG	I*4	Present group number
MAXII	I*4	Maximum number of inner iterations
MKRLB	I*4	Left boundary condition marker
NVEDGE	I*4	Number of shell sources
NUMAFP	I*4	Loop count
NUMII	I*4	Counter for number of inner iterations
IMKCON	I*4	Converged pass flag

Name	Type	Definition
MKRRB	I*4	Right boundary condition marker
MKRSCT	I*4	Scattering type marker
NINTI	I*4	Number of intervals
NUMDIR	I*4	Number of directions

3. Local Variables

Name	Type	Definition
T2	R*8	T*(GEOATN+T8)*(GEOCRV+T7)
T6	R*8	FLXAIN of the Mth + total shell source of the Mth direction
U2	R*8	Group source in scatter source
K1	I*4	Temporary variable for direction mates of the Mth direction
T3	R*8	T2/T1
T7	R*8	Temporary variable for the total isotropic source
T	R*8	Temporary variable for FLXAIN of the Mth direction
T4	R*8	2 * T3
T8	R*8	Temporary variable for the external flux
NGOTO	I*4	Flag to determine if both pass A and pass B are to be used
T1	R*8	Total cross-section of the last interval + geometry factor of the last interval and M^{th} direction
T5	R*8	Temporary variable for the external flux
U1	R*8	FLUXS - FLUXOLD (of the Ith interval)
KEXIT	I*4	Flux which terminates inner iteration loop

4. Functions and tasks performed by this subroutine

This subroutine computes the currents, scalar fluxes, and angular fluxes for the current group, IG, in the following manner.

(1) The basic source for the inner iteration is calculated for each interval I:

SRCTIS(I) = FLXS(I)*CSCSLF(I)+SRCISO(I),
with FLXS(I) saved as FLXOLD(I), and
SRCTA(I) = SRCA(I)+CUR(I,IG)*CSCFIS(I),
where SRCTIS is the total isotropic source, FLXS is the normalized input-distributed source, CSCSLF is the self-scattering cross-section, SRCISO is the source for the interval I, SRCTA is the total anisotropic source for the interval, SRCA is the anisotropic component of the source, CUR is the neutron current for the interval, and CSCFIS in $\nu \cdot \sigma_f$ for the interval, or a temporary storage array for the anisotropic self-scattering cross section in the interval.

(2) The angular flux is now computed for all directions. The boundary conditions are checked in order to define the angular fluxes at both boundaries.

If the right boundary is

(a) white, the inward-pointing angular flux is defined for each direction M as

$$FLXAIN(M) = \sum_M (DIRWMU(M)*FLXAO(M))/\sum_M DIRWMU(M),$$

where M is the number of directions.
Then, FLXAO(M) = FLXAIN(M).

(b) zero or periodic,
FLXAIN(M) = FLXAO(M).

(c) reflective,
FLXAIN(M) = FLXAO(DIRMTS(M)), or
FLXAIN(M) = FLXAO(M) if the direction wieght of a direction M is zero.
FLXEXT(I) = 0.0 for all intervals I.

If the left boundary is

(a) free,
FLXAO(M) = FLXAIN(M) = 0.0.

(b) periodic,
FLXAIN(M) = FLXAO(M).

(c) reflective,

FLXAO(M) = FLXAIN(M) = FLXAIN(DIRMTS(M)),

where DIRMTS(M) is the direction mate of a direction M.

After the above angular flux definition, the inward flow of neutrons is computed for each point from the right boundary inward, with the provision that the angular flux for a direction M at the midpoint of an interval I is the sum of the angular flux at that point plus the shell source if one is specified for that point. If the weight for a given direction is zero, then the extrapolated flux for that direction and interval is also zero.

Several local variables T are set up to compute the average flux for a cell, T3, with the further provisions

T7 = SRCTIS(I)+DIRMU(M)*SRCTA(I),

$$T3 = \frac{FLXAIN(M)*GEOATN(I,M)+FLXEXT(I)*GEOCRV(I,M)+T7}{GEOSAC(I,M)+CSCTOT(I)},$$

and FLXEXT(I) = 2*T3 - FLXEXT(I).

FLXA(I,M) = 2*T3 - FLXA(I+1,M)

and FLXEXT(I) = T3 if W = 0.

Either of two branches is taken for negative flux fixup, if it is required,

(a) If FLXEXT ≤ 0 and FLXA < 0

or, if FLXA < FLXEXT < 0,

T3 = ((GEOATN(I,M)-GEOAMU(I,M))*FLXA(I+1,M)+GEOCRV(I,M)*FLXA(I,M)+T7)/(CSCTOT(I)+GEOSAC(I,M)-2.*GEOAMU(I,M));

FLXEXT(I) = 2*T3 - FLXEXT(I) or

FLXEXT(I) = T3 if W = 0;

FLXA(I,M) = 0

If FLXEXT(I) < 0 step 3 (below) is necessary.

(b) If FLXEXT(I) < 0 and FLXA(I,M) ≥ 0 or

FLXEXT(I) ≤ FLXA(I,M) < 0, then

T3 = (GEOATN(I,M)*SRCS(M)+(GEOCRV(I,M)-.5*GEOSAC(I,M)+GEOAMU(I,M))*FLEXT(I)+T7)/CSCTOT(I)+2.*GEOAMU(I,M)

such that

FLXA(I,M) = 2*T3 - SRCS(M) and

FLXEXT(I) = 0.

If FLXA(I,M) < 0, step 3 is necessary.

(3) If CSCTOT(I) $\neq$ 0,

T3 = ((GEOATN(I,M)-GEOAMU(I,M)*SRCS(M)+(GEOCRV(I,M)-.5*GEOSAC(I,M)+ GEOAMU(I,M)*FLXEXT(I)+T7)/CSCTOT(I)

and FLXEXT(I) = 0.

The "inward" flux components are accumulated as

$$FLXS(I) = \sum_{I} T3*W(M),\ I = 1,2,\ldots,NINTI.$$

Similarly for $\mu(M) > 0$, direction cosines greater than zero, the outward flow of neutrons is calculated for each point from the left boundary outward. A similar negative flux fixup is taken, as required, and the outward flux components are accumulated.

The neutron flow (leakages) at the boundaries are calculated. For the right boundary,

$$ELKRIT(IG) = GEOA(NPTSI)*\sum DIRWMU(M)*FLXAO(M) \text{ and}$$

$$ELKNET(IG) = ELKRIT(IG) - GEOA(1)*ELKNET(IG),$$

where ELKNET is the net leakage.

If the right boundary is not free the net flow test is applied:

$$|ELKNET(IG)| \leq EPSG.$$

If the net flow test is not met, boundary source is computed and the angular fluxes and other angle-dependent quantities are recomputed. If the net flow test is met, or if the right boundary is free, the inner iteration count is increased by one and the inner iteration convergence tests are made.

$$FACSCT = \sum_{I} CSCSLF(I)*(FLXS(I)-FLXOLD(I)),$$

$$FACABS = \sum_{I} CSCSLF(I)*|FLXS(I)-FLXOLD(I)|, \text{ and}$$

$$FACDIF = \sum_{I} (CSCTOT(I)-CSCSLF(I))*|FLXS(I)-FLXOLD(I)|$$

are calculated.

The scalar fluxes, neutron flow, and angular fluxes are adjusted by multiplying by the factor

SRCGRP(IG)/(SRCGRP(IG)-FACSCT).

Inner iteration convergence is achieved if any of the following criteria are met:

(1) FLGAN+FLGIS = 0;
(2) FACABS$\leq$EPSG;
(3) FACDIF$\leq$EPSG;
(4) if the right boundary is not free, ELKNET(IG) = ELKNTT $\leq$ EPSG;

(5) the inner iteration count exceeds the maximum number of inner iterations prescribed. (Statistics of the use of this exit are accumulated, by group, and appear in the final print,

(a) for the final outer iteration and

(b) accumulated over all preceeding outer iterations.)

If a second pass (Pass B) had to be made, the various components (FLXA, FLXAT, FLXAO, FLXAOT, etc.) are combined before the inner iteration count is increased and the tests for convergence are made.

If there are anisotropic scattering components, the currents for an anisotropic case are calculated:

$$CUR(I,IG) = \sum_{I} 1.5*DIRWMU(M)(FLXA(I,M)+FLXA(I+1,M)),$$

$$I = 1,2,\ldots,NINTI.$$

If the convergence tests are failed the inner iteration loop is repeated by referencing the flag KEXIT. If KEXIT = 0 we repeat. If the convergence tests are met, KEXIT is set to 1 and we leave the inner iteration routine.

5. Subprograms called by this subroutine

ARCERR

6. Subprograms calling this subroutine

INNER1 is called by SETARG
INNER is called by OUTER

7. Error messages generated by this subroutine

ERROR IN MODULE NUCOO3 ± nnnnn

where ± nnnnn is

Message Number	Reason
-40001	A negative direction weight has been defined at the right boundary of the reactor.
-40002	The sum of the volume element and the total cross section is equal to zero for an interval on the inward flow of neutron pass.

Message Number	Reason
-40003	The sum of volume element and the total cross section is equal to zero for an interval on the outward flow of neutron pass.
-40004	The net leakage for a group is equal to zero.
-40005	The group source for a group, -FACSCT, is equal to zero.

Subroutine IPRNT1 (GEORAD, GEOVOL, IREGX, ICMPX, REGNAM, CMPNAM, NPTSIP, NINTIP, BSQ, NREG)

Entry Points

Entry IPRINT

1. Arguments

Name	Type	Dimension	Definition
GEORAD	R*8	NPTSIP	Radius to be modified
GEOVOL	R*8	NINTIP	Volume element
IREGX	I*4	NINTIP	Region-to-mesh correspondence
ICMPX	I*4	NINTIP	Composition-to-mesh correspondence
REGNAM	R*8	NREG	Region names
CMPNAM	R*8	NUMCMP	Composition names
NPTSIP	I*4	--	Number of mesh lines
NINTIP	I*4	--	Number of intervals
BSQ	R*8	NUMREG*NIL	Buckling B^2
NREG	I*4	--	Number of regions

2. Common Blocks

/DSRNOS/

Variables used from this common block

Name	Type	Definition
NOUT	I*4	DSRN for output data set

/SIMINT/

Variables used from this common block

Name	Type	Definition
NPTSI	I*4	Number of mesh lines
NUMLIN	I*4	Line counter
NUMOI	I*4	Counter for number of outer iterations
NFIN	I*4	Number of finite geometry types
NIL	I*4	Number of finite directions (integration limits per region)
MKRGEO	I*4	Geometry marker
NINTI	I*4	Number of intervals

3. Local Variables

Name	Type	Definition
DIF	R*8	Difference between present modified radius and new modified radius
N	I*4	Geometry marker
D1	R*8	Region name of the Ith region
TYPE	R*8	Geometry type
D2	R*8	Composition name of the Ith composition

4. Functions and tasks performed by this subroutine

This routine is the geometry data input print routine of the 1-D transport computation module. It prints out the following geometry data:

(1) geometry type (finite or infinite)

(2) buckling information (transverse direction and/or axial direction)

(3) mesh interval boundary

(4) mesh interval number

(5) mesh interval length

(6) volume per unit height

(7) region

(8) composition

5. Subprograms called by this subroutine

NUPAGE

6. Subprograms calling this subroutine

IPRINT1 is called by SETARG

IPRINT is called by MODI (entry in ONEDDC)

IPRINT is called by FPRINT

7. Error messages generated by this subroutine - None

Subroutine MODRDI (GEORAD, GEORD, INPREG, GEORM, NPTSIP, NINTIP)

Entry Points

Entry MODRAD

1. Arguments

Name	Type	Dimension	Definition
GEORAD	R*8	NPTSIP	Modified radii
GEORD	R*8	NPTSIP	Initial radii
INPREG	I*4	NINTIP	Region-to-mesh correspondence
GEORM	R*8	NINTIP	Radius modifiers
NPTSIP	I*4	--	Number of mesh lines
NINTIP	I*4	--	Number of intervals

2. Common Blocks

/SIMFLP/

Variables used from this common block

Name	Type	Definition
PAR	R*8	The critical reactor dimension (cm)

/SIMINT/

Variables used from this common block

Name	Type	Definition
NUMOI	I*4	Counter for number of outer iterations
IPROB	I*4	Type of problem: 1 = Inhomogeneous, 2 = k_{eff} convergence, 3 = Concentration search, 4 = Buckling search, 5 = α search, 6 = Dimension search
NINTI	I*4	Number of intervals

3. Local Variables - None

4. Functions and tasks performed by this subroutine

This subroutine determines the mesh line locations for the problem. For the initial iteration the mesh line locations are determined from the problem input specifications.

For subsequent outer iterations in dimension criticality search problems (region thickness or δ calculation) the formula used is

GEORAD(I+1)=GEORAD(I)+(1.0+PAR*GEORM(I)*(GEORD(I+1)-GEORD(II)),

where GEORAD(1) = GEORD(1)

and GEORM(I) is the X-dimension region modifier for all I in the corresponding region (GEORM(I) for interface I is the region modifier associated with the region to the right).

5. Subprograms called by this subroutine

ARCERR

6. Subprograms calling this subroutine

MODRD1 is called by SETARG

MODRAD is called by ONEDDC

MODRAD is called by RED (entry in ONEDDC)

MODRAD is called by MODI (entry in ONEDDC)

7. Error messages generated by this subroutine

ERROR IN MODULE NUC003 ± nnnnn

where ± nnnnn is

Message Number	Reason
-10001	One or more of the radii GEORAD is less than or equal to zero on initialization.
-10002	The distance between two consecutive radii, (GEORAD-GEORD) is less than or equal to zero on initialization.
-10003	The modified radius is less than zero.
-10004	The problem type in SP.CICN was specified as a buckling search. This is not allowed.

Subroutine MODXS (CNAME, CHI, CMPMOD, MODCMP, CHIM, SCTISO, NUP, NDN, SCTIS, NUPM, NDNM, MKRCM, IND, NGROPP, NG, MKR, CSC NCSCP, NUPD, NDND, NUPSCT, NDNSCT, NUPSC, NDNSC, NL)

1. Arguments

Name	Type	Dimension	Definition
CNAME	R*8	NUMCMP	Composition labels
CHI	R*8	MKR*NGROPP	Fission spectrum
CMPMOD	R*8	NUMCMP	Composition modifier
MODCMP	I*4	NUMCMP	Composition to be modified
CHIM	R*8	NG	Fission spectrum
SCTISO	R*8	NL*LCM	Information read record type 4, data set XS.C.MIN, before modification

Name	Type	Dimension	Definition
NUP	I*4	NGROPP	Number of upscattering groups before modification
NDN	I*4	NGROPP	Number of downscattering groups before modification
SCTIS	R*8	NL*LCM	Information read record type 4, data set XS.C.MIN, after modification
NUPM	I*4	NGROPP*LCM	Number of upscattering maximum
NDNM	I*4	NGROPP*LCM	Number of downscattering maximum
MKRCM	I*4	LCM	Fission spectrum flag of this composition
IND	I*4	LCM	Indicator for composition modifier
NGROPP	I*4	--	Number of groups
NG	I*4	--	3*NGROUP + 7
MKR	I*4	--	MKRSET
CSC	R*8	NCSCP*NGROPP* NUMCMP	Cross-sections
NCSCP	I*4	--	Number of cross-sections
NUPD	I*4	NGROPP	Number of upscattering groups after modification
NDND	I*4	NGROPP	Number of downscattering groups after modification
NUPSCT	I*4	--	Number of upscattering groups for a given group before modification
NDNSCT	I*4	--	Number of downscattering groups for a given group before modification
NUPSC	I*4	--	Number of upscattering groups for a given group after modification
NDNSC	I*4	--	Number of downscattering groups for a given group after modification

Name	Type	Dimension	Definition
NL	I*4	--	NG*NGROPP*LCM, the number of record types 4 times the length of record types 4 of XS.C.MIN

2. Common Blocks

/DSRNOS/

Variables used from this common block

Name	Type	Definition
NXSCMN	I*4	DSRN for data set XS.C.MIN

/PRSTAR/

Variables used from this common block

Name	Type	Definition
LCM	I*4	Number of compositions to be modified

3. Local Variables

Name	Type	Definition
NFAM	I*4	Number of families of delayed neutrons
JTEMP	I*4	Group number
ISCHI	I*4	Fission spectrum flag
MAXDN	I*4	Maximum number of groups of downscattering
IUPDN	I*4	Scattering type indicator
MAXUP	I*4	Maximum number of groups of upscattering
NFCMP	I*4	Number of fissionable compositions
LENGTH	I*4	Length of record type 4, data set XS.C.MIN
NDNSCT	I*4	Number of downscattering groups for a composition
NGROUP	I*4	Number of groups

Name	Type	Definition
NUMCMP	I*4	Number of compositions
NXSCM1	I*4	Data set reference number of modified composition regional cross-section data
MKRCMP	I*4	ICHI
NGRPP1	I*4	Number of groups + 1
NUPSCT	I*4	Number of upscattering groups for a composition
L(5)	I*4	Name used for determining length of record 4 to be written in the modified cross-section data set XS.C.MI1

4. Functions and tasks performed by this subroutine

This subroutine writes the new composition level cross-section data, after a concentration search, into data set XS.C.MI1. It reads the information from data set XS.C.MIN, modifies it where necessary, and writes the new information into the records of data set XS.C.MI1. Upon completion of the writing of XS.C.MI1 the data set reference number NXSCM1 is interchanged with the data set reference number for data set XS.C.MIN. The data set reference number for XS.C.MI1 thus becomes NXSCMN. This is done to mask the writing of a new data set and to prevent destroying the old data on data set XS.C.MIN.

5. Subprograms called by this subroutine

DUMP (entry in POINTR)
ARCERR
SNUFF
SNIFF (ARC system module)

6. Subprograms calling this subroutine

PRANGF

7. Error messages generated by this subroutine

ERROR IN MODULE NUCOO3 ± nnnnn

where ± nnnnn is

Message Number	Reason
-61777	No end-of-file for file 1 of data set XS.C.MIN.
-61778	Modified cross-section data set XS.C.MI1 is not available for a concentration search.
-61779	Unexpected end-of-file on record type 2 of file 2 of data set XS.C.MIN.
-61780	No end-of-file for file 1 of data set XS.C.MIN.
-61788	Unexpected end-of-file on record type 3 of file 2 of data set XS.C.MIN.
-61789	Error in reading record type 3 of file 2 of data set XS.C.MIN.
-61790	Unexpected end-of-file on record type 4 of file 2 of data set XS.C.MIN.
-61791	Error in reading record type 4 of file 2 of data set XS.C.MIN.

Subroutine MPRIN1 (STANB, NGRPP)

Entry Points

Entry MPRINT

1. Arguments

Name	Type	Dimension	Definition
STANB	R*8	NGRPP	Neutron balance
NGRPP	I*4	--	Number of groups + 1

2. Common Blocks

/SIMFLP/

Variables used from this common block

Name	Type	Definition
EPS	R*8	Convergence criterion for a source or k_{eff} calculation
PAR	R*8	The critical reactor dimension (cm)
RATFIS	R*8	Fission ratio
RATSL	R*8	Difference between the Pth value and the initial value of the critical parameter, divided by the corresponding change in LAMBDA
EPSFIS	R*8	Convergence criterion for the fission source

/SIMINT/

Variables used from this common block

Name	Type	Definition
NUMLIN	I*4	Line counter
NUMAFP	I*4	Loop count
NUMOI	I*4	Counter for number of outer iterations
MAXOI	I*4	Maximum number of outer iterations
NGRPP1	I*4	Number of groups + 1
IMKMON	I*4	Integer flag indicating maximum number of outer iterations has been exceeded, causing a final print

/TIMER/

Variables used from this common block

Name	Type	Definition
TI	R*4	Clock time

/DSRNOS/

Variables used from this common block

Name	Type	Definition
NOUT	I*4	DSRN for output data set

3. Local Variables

Name	Type	Definition
TIDECR	R*4	Time increment since previous calculation for clock time
TIPREV	R*4	Previous clock time

4. Functions and tasks performed by this subroutine

This subroutine edits and prints the following information: outer iteration count, angular flux calculation count, total neutron balance, epsilon, lambda, fission change, eigenvalue, and time in minutes required for this outer iteration.

If the number of outer iterations exceeds the maximum number of outer iterations specified the following message is printed:

"THE NUMBER OF OUTER ITERATIONS = nnnn. THIS EXCEEDS THE MAXIMUM NUMBER OF OUTER ITERATIONS REQUESTED."

The problem is thus terminated and the output is presented.

5. Subprograms called by this subroutine

CLOCK (IBM routine)
NUPAGE

6. Subprograms calling this subroutine

MPRIN1 is called by SETARG

MPRINT is called by ONEDTR

MPRINT is called by MNTR (entry in ONEDTR)

7. Error messages generated by this subroutine - None

Subroutine NUPAGE

1. Arguments - None

2. Common Blocks

/DSRNOS/

Variables used from this common block

Name	Type	Definition
NOUT	I*4	DSRN for output data set

/SIMINT/

Variables used from this common block

Name	Type	Definition
NUMLIN	I*4	Line counter
NUMPAG	I*4	Page counter

3. Local Variables - None

4. Functions and tasks performed by this subroutine

This subroutine advances the printer to a new page and advances the current page number by one after printing the page number at the top of the previous page.

5. Subprograms called by this subroutine - None

6. Subprograms calling this subroutine

Main
PROCDS
FPRINT (entry in FPRNT1)
IPRINT (entry in IPRNT1)
MPRINT (entry in MPRIN1)
SNARC1
PRANGF
CHINRM (entry in CHINM1)
RITEXS

7. Error messages generated by this subroutine - None

Subroutine ONEDCC

1. Arguments - None

2. Common Blocks

/SIMFLP/

Variables used from this common block

Name	Type	Definition
EPS	R*8	Convergence criterion for a source or k_{eff} calculation
PARP	R*8	Value of PAR from the previous iteration
RATFIS	R*8	Fission ratio
RATSL	R*8	Difference between the Pth value and the initial value of the critical parameter, divided by the corresponding change in LAMBDA
EPSFIS	R*8	Convergence criterion for the fission source
RATFIL	R*8	Lower LAMBDA
RATFIU	R*8	Upper LAMBDA
RATSLL	R*8	0.005
PARMOD	R*8	PAR modifier
RATFIO	R*8	Outer LAMBDA
RATSLO	R*8	Previous value of RATSL
EPSOTR	R*8	Convergence criterion for a source or k_{eff} calculation
FLGPMD	R*8	The flag for parameter modification
PAROD	R*8	Parameter oscillation damper for criticality searches
RATFIP	R*8	Previous LAMBDA

/SIMINT/

Variables used from this common block

Name	Type	Definition
IMKPAR	I*4	Flag which determines if monitor line is to be printed, if another pass is to be made, or if we should enter the final print routine
IMKCON	I*4	Converged pass flag
IPROB	I*4	Type of problem: 1 = Inhomogeneous, 2 = k_{eff} convergence, 3 = Concentration search, 4 = Buckling search, 5 = α search, 6 = Dimension search

3. Local Variables

Name	Type	Definition
V4	R*8	Absolute value of (outer LAMBDA - fission ratio)
U1	R*8	Previous LAMBDA - fission ratio
U5	R*8	Absolute value of (RATSLO/RATSL - 1.0)
V1	R*8	1.0 - fission ratio
V2	R*8	Absolute value of V1

4. Functions and tasks performed by this subroutine

The difference between the Pth value of the critical parameter and the (P-1)st value of the critical parameter divided by the corresponding change in LAMBDA is calculated in this routine. This calculation is made for values of IPROB$\geq$3:

RATSL = (PARP - PAR)/(RATFIP - RATFIS).

The following test is made on RATSL:

(1) |RATSLO/RATSL - 1.0| $\leq$ RATSLL,

where RATSLO is the previous value of RATSL

and RATSLL is a code parameter ($\sim$0.005).

Other tests are made on

(2) |1.0 - RATFIS| >RATFIL,

(3) |1.0 - RATFIS| >EPS

and

(4) $|1.0 - RATFIS| \leq RATFIU$,

where RATFIL and RATFIU are code parameters ($\sim$.01, .05)

If test (1) is satisfied, an indicator is set to bypass the other tests for the remainder of the run. Convergence is tested using only the test in subroutine CONVRG.

A new eigenvalue is calculated, if necessary, using equation (2) below. New eigenvalues used in the criticality search option are calculated.

Equation (1) (used to determine the second eigenvalue only)

$$PAR = PARMOD,$$

where PARMOD is the modifier given as input.

Equation (2) (used for determining all eigenvalues when tests have been satisfied)

$$PAR = PAR_0 + (1.0-RATFIS)*RATSL*PAROD$$

where PAROD is the parameter oscillation damper, (either specified as input or set by the code) and PAR_0 is the last value of PAR.

5. Subprograms called by this subroutine

ARCERR

6. Subprograms calling this subroutine

EXEC

7. Error messages generated by this subroutine

ERROR IN MODULE NUCOO3 ± nnnnn

where ± nnnnn is

Message Number	Reason
-51002	Previous lambda minus present lambda equals zero.
-51003	Difference between Pth value and the initial value of the critical search parameter, divided by the corresponding difference in lambda, equals zero.

Subroutine ONEDCD

1. Arguments - None

2. Common Blocks - None

3. Local Variables - None

4. Functions and tasks performed by this subroutine

   This subroutine calls SNCHEK and CHINRM.

5. Subprograms called by this subroutine

   SNCHEK (entry in SNCHK1)
   CHINRM (entry in CHINM1)

6. Subprograms calling this subroutine - None

7. Error messages generated by this subroutine - None

Subroutine ONEDDC

Entry Points

Entry RED
Entry MODI

1. Arguments - None

2. Common Blocks

/POINT/

Variables used from this common block

Name	Type	Definition
ICSC	I*4	Pointer for cross-sections

/ARRAY/

Variables used from this common block

Name	Type	Definition
A(60000 Fast; 120000 bulk)	R*8	Container array

/DDUFFY/

Variables used from this common block

Name	Type	Definition
IMDCMP	I*4	Pointer for array of compositions to be modified
ICPMOD	I*4	Pointer for array of composition modifiers
IMC	I*4	Pointer for array of composition indices

/EXTPT2/

Variables used from this common block

Name	Type	Definition
ICHIM	I*4	Pointer for array of χ used in calculation
IINPFC	I*4	Pointer for array of fission blocks
IINPBI	I*4	Pointer for array of composition blocks

/SIMIN3/

Variables used from this common block

Name	Type	Definition
NORONE	I*4	NGROUP for matrix calculation, 1 for vector calculation

/SIMINT/

Variables used from this common block

Name	Type	Definition
IMKFIC	I*4	Integer flag which determines if fission radius is to be recalculated
MKRSHL	I*4	Shell source marker
NCSCS	I*4	Number of cross-sections
MKRDIS	I*4	Distributed source indicator
NGROUP	I*4	Number of groups
IPROB	I*4	Type of problem: 1 = Inhomogeneous, 2 = k_{eff} convergence, 3 = Concentration search, 4 = Buckling search, 5 = α search, 6 = Dimension search

4. Functions and tasks performed by this subroutine

This is a control subroutine which calls subroutine CHXSEC and entry points MODRAD, GEOMES, GEOFCN, and IPRINT. Depending on certain flags (MKRSHL and MKRDIS) it may also call SHELL and FXDSRC.

5. Subprograms called by this subroutine

CHXSEC
MODRAD (entry in MODRD1)
GEOMES (entry in GEOMS1)
GEOFCN (entry in GEOFN1)
SHELL (entry in SHELL1)
FXDSRC (entry in FXDSC1)
IPRINT (entry in IPRNT1)

6. Subprograms calling this subroutine

ONEDCC is called by EXEC
RED is called by EXEC
MODI is called by EXEC

7. Error messages generated by this subroutine - None

Subroutine ONEDTR

Entry Points

MNTR

1. Arguments - None

2. Common Blocks

/SIMINT/

Variables used from this common block

Name	Type	Definition
NUMOI	I*4	Counter for number of outer iterations
IMKCON	I*4	Converged pass flag
IMKMON	I*4	Integer flag indicating maximum number of outer iterations has been exceeded, causing a final print

3. Local Variables - None

4. Functions and tasks performed by this subroutine

This is a control subroutine which calls FISION, MPRINT, OUTER, and CONVRG. The subroutine also sets the convergence flag IMKCON depending on the value of IMKMON.

5. Subprograms called by this subroutine

FISION (entry in FSORCE)
MPRINT (entry in MPRIN1)
OUTER (entry in OUTER1)
CONVRG

6. Subprograms calling this subroutine

ONEDTR is called by EXEC
MNTR is called by EXEC

7. Error messages generated by this subroutine - None

Subroutine OUTER1 (STAABS, CSCABS, FLXA, SRCA, CUR, SRCDIS, INPFBC, SRCFI, SRCFG, SRCFXD, CHIM, STAFN, SRCGRP, CSCGRP, SRCISO, DIRMU, IXXNB, ELKNET, STAND, STANF, FLXS, STANB, CSCFIS, FLXAO, FLXST, INPCMP, ELKRIT, FLXINP, SRCSCT, STASSC, CSCSLF, MKRSKP, STASDN, CSCINT, FLXSTR, CHGTIM, SRCTIS, CSCTOT, GCNVEL, GEOVOL, NORONP, NFBLKP, NMDIRP, NPTSIP, NINTIP, NGROPP, NMCOMP, NGRPP)

Entry Points

Entry OUTER

1. Arguments

Name	Type	Dimension	Definition
STAABS	R*8	NGRPP	Total reactor absorption
CSCABS	R*8	NINTIP	Absorption cross-section
FLXA	R*8	NPTSIP	Angular flux
SRCA	R*8	NINTIP	Anisotropic source
CUR	R*8	NINTIP* NGROPP	Current
SRCDIS	R*8	NINTIP* NGROPP	Distributed source
INPFBC	I*4	NMCOMP	Fission blocks
SRCFI	R*8	NINTIP* NORONP	Fission neutrons
SRCFG	R*8	NGRPP	Fission source
SRCFXD	R*8	NGRPP	Fixed source
CHIM	R*8	NORONP* NGROPP* NFBLKP	Fission spectra which are used in the calculation
STAFN	R*8	NGRPP	Fission neutrons in group J summed over reactor volume
SRCGRP	R*8	NGROPP	Group source
CSCGRP	R*8	NINTIP	Group cross-section

Name	Type	Dimension	Definition
SRCISO	R*8	NINTIP	Isotropic source
DIRMU	R*8	NMDIRP	Direction cosines
IXXNB	I*4	NGROPP	The number of times the neutron balance has exceeded the inner loop convergence criterion
ELKNET	R*8	NGRPP	Net leakage
STAND	R*8	NGRPP	Scalar flux summed over reactor volume in all groups in interval I for group J, divided by group velocity
STANF	R*8	NGRPP	Neutron flux
FLXS	R*8	NINTIP	Flux for the present iteration
STANB	R*8	NGRPP	Neutron blance
CSCFIS	R*8	NINTIP	ν* fission cross-section
FLXAO	R*8	NMDIRP	Angular outgoing flux
FLXST	R*8	NINTIP	Previous value of FLXS
INPCMP	I*4	NINTIP	Composition-to-mesh correspondence
ELKRIT	R*8	NGRPP	Total flow from the right boundary for all groups
FLXINP	R*8	NINTIP* NGROPP	Scalar flux
SRCSCT	R*8	NGRPP	Scatter source
STASSC	R*8	NGRPP	Self-scattering
CSCSLF	R*8	NINTIP	Self-scattering cross-section
MKRSKP	I*4	NGROPP	Group skipping flag
STASDN	R*8	NGRPP	Neutron removal from group G
CSCINT	R*8	NINTIP	Input cross-sections
FLXSTR	R*8	NMDIRP* NGROPP	Initial flux

Name	Type	Dimension	Definition
CHGTIM	R*8	NGROPP	Time absorption factor used to modify the total cross-section in an α calculation
SRCTIS	R*8	NINTIP	Total isotropic source
CSCTOT	R*8	NINTIP	Total cross-section
GCNVEL	R*8	NGROPP	Velocity
GEOVOL	R*8	NINTIP	Volume element
NORONP	I*4	--	NGROUP for χ-matrix, 1 for χ-vector
NFBLKP	I*4	--	Number of fissionable composition blocks
NMDIRP	I*4	--	Number of directions
NPTSIP	I*4	--	Number of mesh lines
NINTIP	I*4	--	Number of intervals
NGROPP	I*4	--	Number of groups
NMCOMP	I*4	--	Number of compositions
NGRPP	I*4	--	Number of groups +1

2. Common Blocks

/SIMFLP/

Variables used from this common block

Name	Type	Definition
PAR	R*8	The critical reactor dimension (cm)
RATFIS	R*8	Fission ratio
STABMX	R*8	Maximum balance error
FLGAN	R*8	Anisotropic scattering flag
PARKA	R*8	The fixed inverse reactor period, sec^{-1}
STASCT	R*8	LAMBDA

Name	Type	Definition
EPSG	R*8	Net loop convergence criterion
FLGIS	R*8	Isotropic scattering flag
RATFIO	R*8	Outer LAMBDA
RATSCT	R*8	Ratio for the scattering
STABER	R*8	Balance error

/SIMINT/

Variables used from this common block

Name	Type	Definition
ISELF	I*4	Pointer for self-scattering cross-section
IXXBER	I*4	Indicates the number of times the neutron balance exceeded inner loop convergence criterion
MKRSHL	I*4	Shell source marker
NCSCS	I*4	Number of cross-sections
NPTSI	I*4	Number of mesh lines
IG	I*4	Present group
IMKGRP	I*4	Integer flag which determine if inner iterations are not to be performed
IMKSCT	I*4	Scattering flag indicating method of group cross-section calculation
ISN	I*4	SN order
MKRDIS	I*4	Distributed source indicator
NGROUP	I*4	Number of groups
NUMII	I*4	Counter for number of inner iterations
IMKCON	I*4	Converged pass flag

Name	Type	Definition
IMKKA	I*4	Module-dependent input flag indicating α or k calculation
INTRVL	I*4	Interval
ITOTAL	I*4	Position of total source
MKRDTH	I*4	Diffusion theory option indicator
MKRRB	I*4	Right boundary condition marker
MKRSKI	I*4	Group skipping indicator
NGRPP1	I*4	Number of groups +1
IPROB	I*4	Type of problem: 1 = Inhomogeneous, 2 = k_{eff} calculation, 3 = Concentration search, 4 = Buckling search, 5 = α search, 6 = Dimension search
ITYPE	I*4	Type of cross-section indicator
MKRSCT	I*4	Scattering type marker
MKRTHY	I*4	Solution type marker (adjoint or real)
NINTI	I*4	Number of intervals
NUMDIR	I*4	Number of directions
NUMKIV	I*4	χ vector indicator

3. Local Variables

Name	Type	Definition
U1	R*8	Dummy variable
IGP	I*4	Previous group count
LUMMY	I*4	Error return from POINTR
K1	I*4	Dummy indexing variable
U2	R*8	Absolute value of the neutron balance - group convergence criterion
ITEMP	I*4	Temporary variable for INPCMP(I)

Name	Type	Definition
U	R*8	Temporary variable for velocity of the Jth group
K2	I*4	INPFBC(ITEMP)
V1	R*8	Ratio of solution divided by removal
K	I*4	Flag to indicate leakage is to be computed

4. Functions and tasks performed by this subroutine

This subroutine computes the correction factor for total cross-section and goes through the outer iteration loop. After it computes the correction factor for total cross-section it sets the group counter to one and starts the outer iteration loop.

First the fixed source (non-direction dependent) for group IG (present group) is computed. The fission cross-sections for each interval and the scattering vector for this interval and group are made available by calls to appropriate subroutines. A check is made regarding calculation type (adjoint or real) and the appropriate section of code is entered to calculate SRCISO of the interval I.

For a vector calculation

```
SRCISO(I) = GEOVOL(I)*(SRCISO(I)+SRCFI(I,1)*CSCINT(I))
```

for the adjoint case, and

```
SRCISO(I) = GEOVOL(I)*(SRCISO(I)+SRCFI(I,1)*CHIM(I,IG,K2))
```

for the real case.

For a matrix calculation

```
SRCISO(I) = GEOVOL(I)*(SRCISO(I)+SRCFI(I,IG)*CSCINT(I))
```

for the adjoint case, and

```
SRCISO(I) = GEOVOL(I)*SRCFI(I,K)*CHIM(K,IG,K2)+SRCISO(I)
```

for the real case, except when there is a distributed source for that interval. Then,

```
SRCISO(I) = GEOVOL(I)*(SRCDIS(I,IG)+SRCFI(I,K)*CHIM(K,IG,K2)).
```

Here I is the interval, K is NORONE, IG is the present group, and K2 is the fission block.

Of course if K2 = 0,

SRCISO(I) = GEOVOL(I)*SRCISO(I), where SRCISO(I) was initially 0 or SRCDIS(IG) if a distributed source was specified.

The contributions from up- and down-scattering are then added. The first zero down-scatter found will not terminate summation for this group. Hence,

$$\text{SRCISO(I)} = \sum_{\text{ITYPE}} \text{CSCGRP(ITYPE)*FLXINP(I,K1)+SRCISO(I)}$$

where ITYPE = ITOTAL+1 and K1 = IG+ISELF-ITYPE.

Group source is calculated as

$$\text{SRCGRP(IG)} = \sum_{\text{I}} \text{SRCISO(I)+SRCFXD(IG)}$$

Finally, the scatter source is

SRCSCT(IG) = SRCGRP(IG) - SRCFXD(IG) - SRCFG(IG).

The total cross-section is obtained by calling CSCIN and multiplying the cross-section by the volume element as shown below:

CSCTOT(I) = GEOVOL(I)*CSCINT(I).

Next the anisotropic source, if any, is computed, along with the self-scatter term.

The scattering vector is obtained for the interval and group by calling CSCGP and calculating

SRCA(I) = SRCA(I)+CSCGRP(ITYPE)*CUR(I,K1),

where ITYPE = ITOTAL+1

and K1 = IG+ISELF-ITYPE.

The diffusion theory option is tested for use and used by calling DTSIM (if necessary) and the inner iteration loop is by-passed. Otherwise, if there is a group source, then MKRSKI is tested and, if the group is to be skipped,

FLXS(I) = FLXINP(I,IG) where I = 1,2,...,NINTI.

Otherwise net and right leakage terms are computed:

$$\text{ELKNET(IG)} - \text{ELKNET(IGP)*SRCGRP(IG)/}(\sum_{\text{I}}\text{FLXS(I)*(CSCTOT(I)-CSCSLF(I))}$$
$$\text{+ELKNET(IGP))}$$

and

$$\text{ELKRIT(IG)} = \text{ELKRIT(IGP)*SRCGRP(IG)/}(\sum_{\text{I}}\text{FLXS(I)*(CSCTOT(I)-CSCLF(I))}$$
$$\text{+ELKNET(IGP))}$$

The scalar flux and angular flux and angular flux out are computed.

The inner iteration loop is set up (NUMII = 0) and subroutine INNER is called if IMKGRP = 1. Upon return from inner after inner loop convergence for group IG, the group statistics are computed.

The absorption and NU*SIGMA fission cross-section for all intervals are obtained and the self-scattering reaction rate for the group, the total reactor absorptions for group IG, the fission neutrons in group IG summed over the reactor volume, the sum over the reactor volume of the scalar flux in interval I for group IG divided by the group velocity, and the neutron balance for the group are computed as follows:

$$\text{STASSC(IG)} = \sum_{I} \text{CSCSLF(I)*FLXS(I)};$$

$$\text{STAABS(IG)} = \sum_{I} \text{CSCABS(I)*FLXS(I)},$$

where $\text{CSCABS(I)} = \text{GEOVOL(I)*CSCINT(I)};$

$$\text{STAFN(IG)} = \sum_{I} \text{CSCFIS(I)*FLXS(I)},$$

where $\text{CSCFIS(I)} = \text{GEOVOL(I)*CSCINT(I)};$

and $\text{STANF(IG)} = \sum_{I} \text{GEOVOL(I)*FLXS(I)},$

so $\text{STAND(IG)} = \text{STANF(IG)/GCNVEL(IG)};$

$$\text{STASDN(IG)} = \sum_{I} \text{CSCTOT(I)*FLXS(I)} - \text{STASSC(IG)-STAABS(IG)};$$

and finally,

$$\text{STANB(IG)} = \text{SRCFXD(IG)+SRCFG(IG)+SRCSCT(IG)-ELKNET(IG)-STAABS(IG)-STASDN(IG)},$$

where I = 1,2,3,...,NINTI

and IG is the present group.

A test is made on STANB(IG) by testing if

$|\text{STANB(IG)}| \leq \text{EPSG}.$

If $|\text{STANB(IG)}| > \text{EPSG}$, the average excess, maximum excess and number of occurrences for each group are calculated:

$\text{STABER} = |\text{STANB(IG)}| - \text{EPSG}$

and $\text{STABMX} = \text{MAX(STABER)}.$

If IMKCON was greater than 0 the angular flux printout routine is called for printing out the angular fluxes and other information necessary for final output after convergence (if necessary or required).

The group count is incremented and the loop is traversed until all groups have been traversed.

Finally the group totals for this outer iteration are computed by the following formulas:

$$\text{SRCSCT(NGRPP1)} = \sum_J \text{SRCSCT(J)};$$

$$\text{STASSC(NRGPP1)} = \sum_J \text{STASSC(J)};$$

$$\text{ELKNET(NGRPP1)} = \sum_J \text{ELKNET(J)};$$

$$\text{STAABS(NGRPP1)} = \sum_J \text{STAABS(J)};$$

$$\text{STASDN(NGRPP1)} = \sum_J \text{STASDN(J)};$$

$$\text{ELKRIT(NGRPP1)} = \sum_J \text{ELKRIT(J)};$$

$$\text{STANB(NGRPP1)} = \sum_J \text{STANB(J)};$$

and, if IMKCON $\neq$ 0,

$$\text{STANF(NGRPP1)} = \sum_J \text{STANF(J)},$$

$$\text{STAND(NGRPP1)} = \sum_J \text{STAND(J)},$$

and $$\text{STAFN(NGRPP1)} = \sum_J \text{STAFN(J)}.$$

Then RATFIO = RATFIS,

U1 = STASDN(NGRPP1)/(SRCFXD(NGRPP1) + SRCFG(NGRPP1)),

RATSCT = STASCT/U1,

and STASCT = U1.

5. Subprograms called by this subroutine

PUTPNT (entry in POINTR)	FINDGP
GETPNT (entry in POINTR)	DTSIM (entry in DTSIM1)
CSCIN (entry in CSCIN1)	INNER (entry in INNER1)
CSCGP (entry in CSCGP1)	PRANGF

6. Subprograms calling this subroutine

OUTER1 is called by SETARG

OUTER is called by ONEDTR
MNTR (entry in ONEDTR)

7. Error messages generated by this subroutine - None

Subroutine PRANGF (GEORAD,FLXA,FLXINP,SRCFI,CURPT,DIRWMU,NPTSIP,NINTIP)

1. Arguments

Name	Type	Dimension	Definition
GEORAD	R*8	NPTSIP	Radii to be modified
FLXA	R*8	NPTSIP* NUMDIR	Angular flux
FLXINP	R*8	NINTIP* NGROUP	Scalar flux
SRCFI	R*8	NINTIP* NGROUP	Fission neutrons
CURPT	R*8	NPTSIP* NGROUP	Current
DIRWMU	R*8	NUMDIR	Direction weights * cosines
NPTSIP	I*4	--	Number of mesh lines
NINTIP	I*4	--	Number of intervals

2. Common Blocks

/PRSTAR/

Variables used from this common block

Name	Type	Definition
LCM	I*4	Number of compositions to be modified

/DDUFFY/

Variables used from this common block

Name	Type	Definition
IMDCMP	I*4	Pointer for array of compositions to be modified
ICPMOD	I*4	Pointer for array of composition modifiers

/POINT/

Variables used from this common block

Name	Type	Definition
IINPRE	I*4	Pointer for array of region-to-mesh correspondence
IINPCM	I*4	Pointer for array of composition-to-mesh correspondence

/EXTPNT/

Variables used from this common block

Name	Type	Definition
IINPCR	I*4	Pointer for array of composition-to region correspondence

/EXTPT2/

Variables used from this common block

Name	Type	Definition
INUP	I*4	Pointer for array of groups which have up-scattering
ICHIM	I*4	Pointer for array of χ
ICHT	I*4	Pointer for array of set-wide χ
ISCTIS	I*4	Pointer for array of the position of the cross-section information written into record type 4, data set XS.C.MIN

/ARRAY/

Variables used from this common block

Name	Type	Definition
A(60000 fast; 120000 bulk)	R*8	Container array

/SIMINT/

Variables used from this common block

Name	Type	Definition
IG	I*4	Present group
NGROUP	I*4	Number of groups
IMKKA	I*4	Module-dependent input flag indicating α calculation
NGRPP1	I*4	Number of groups +1
IPROB	I*4	Type of problem: 1 = Inhomogeneous, 2 = k_{eff} convergence, 3 = Concentration search, 4 = Buckling search, 5 = α search, 6 = Dimension search
MKRTHY	I*4	Solution type marker (adjoint or real)
NINTI	I*4	Number of intervals
NPTSI	I*4	Number of mesh lines
NUMLIN	I*4	Line counter
NUMREG	I*4	Number of regions
NUMOI	I*4	Counter for number of outer iterations
NUMCMP	I*4	Number of compositions
NIL	I*4	Number of finite directions (integration limits per region)
NUMDIR	I*4	Number of directions

/SIMFLP/

Variables used from this common block

Name	Type	Definition
PAR	R*8	The critical reactor dimension (cm)
PARKA	R*8	The fixed inverse reactor period, sec^{-1}

/SIMIN3/

Variables used from this common block

Name	Type	Definition
MKRSET	I*4	Fission spectrum flag
NORONE	I*4	NGROUP for matrix calculation, 1 for vector calculation

/ISANIS/

Variables used from this common block

MKRFLX	I*4	Angular flux print-out flag

/DSRNOS/

Variables used from this common block

Name	Type	Definition
NOUT	I*4	DSRN of output data set
NFSD1	I*4	DSRN of data set FSR.D1
NGEOM	I*4	DSRN of data set GEOM
NFRD1	I*4	DSRN of data set FR.D1

/DSRNO2/

Variables used from this common block

Name	Type	Definition
NFAD1A	I*4	DSRN of data set FA.D1A
NJRD1	I*4	DSRN of data set JR.D1
NFAD1	I*4	DSRN of data set FA.D1

Name	Type	Definition
NFRD1A	I*4	DSRN of data set FR.D1A
NFSAD1	I*4	DSRN of data set FSA.D1
NJAD1	I*4	DSRN of data set JA.D1

3. Local Variables

Name	Type	Definition
MM(256)	I*4	Identity array for direction numbers
K4	I*4	1
IPH	I*4	Dummy variable for certain names read from NGEOM
MMI	I*4	NUMDIR - K2
KIND	I*4	Indicates transport theory problem
TEMP	R*8	PAR or 1.0 or PARKA
K1	I*4	Index for printout
DIR(2)	R*8	'DIRECTION'
DNUM	R*8	'NUMBER'
NTEMP	I*4	NORONE +1
IG	I*4	Group count
K2	I*4	Index for printout
NG	I*4	3 * NGROUP +7
LAREA	I*4	Length of record type 6, data set GEOM
NAREA	I*4	Number of areas
NZONE	I*4	Number of zones
IJ	I*4	IG
K3	I*4	0

Name	Type	Definition
T1	R*8	DIRWMU of a direction
LZONE	I*4	Length of record type 7, data set GEOM
NGROPP	I*4	Number of groups

4. Functions and tasks performed by this subroutine

This subroutine prints angular fluxes, on command, and writes them into data set FR.D1A. The routine is called only upon convergence of the 1-D transport computation and therefore is used to call other routines and perform certain tasks that are necessary only after convergence. These tasks are briefly discussed below.

The subroutine is used to write out the real data sets for fluxes (FR.D1), currents (JR.D1), and fission source (FSR.D1). If the calculation type is adjoint, then the adjoint data sets (FA.D1, FSA.D1, JA.D1) are written.

Subroutines GEOMOD and MODXS are called from this routine for the modification of the geometry data set, GEOM, and the composition level cross-section data set, XS.C.MIN.

5. Subprograms called by this subroutine

NUPAGE
SNUFF
PUTPNT (entry in POINTR)
GEOMOD
MODXS

6. Subprograms calling this subroutine

OUTER (entry in OUTER1)

7. Error messages generated by this subroutine - None

Subroutine PROCDS

1. Arguments - None

2. Common Blocks

/SIMFLP/

Variables used from this common block

Name	Type	Definition
CONNF	R*8	Normalization factor
EPS	R*8	Convergence criterion for a source or k_{eff} calculation
PAR	R*8	The critical reactor dimension (cm)
BSQ2	R*8	Buckling in the second transverse direction
PARKA	R*8	The fixed inverse reactor period, sec^{-1}
BSQ1	R*8	Buckling in the first transverse direction
PARMOD	R*8	PAR modifier
PAROD	R*8	Parameter oscillation damper for criticality search

/SIMINT/

Variables used from this common block

Name	Type	Definition
MKRDF	I*4	Density factor flag
MKRGES	I*4	Type of input guess 0 - FSR.D1 or FSA.D1 only 1 - FR.D1 or FA.D1 only 2 - Both FSR.D1 and FR.D1 or FSA.D1 and FA.D1
MKRSHL	I*4	Shell source marker

Name	Type	Definition
NPTSI	I*4	Number of mesh lines
NUMREG	I*4	Number of regions
ISN	I*4	SN order
MAXII	I*4	Maximum number of inner iterations
MKRDIS	I*4	Distributed source indicator
MKRLB	I*4	Left boundary condition marker
NVEDGE	I*4	Number of surface sources
NGROUP	I*4	Number of groups
NFIN	I*4	Number of finite geometry types
IMKKA	I*4	Module-dependent input flag indicating α or k-calculation
MAXOI	I*4	Maximum number of outer iterations
MKRDTH	I*4	Diffusion theory option indicator
MKRRB	I*4	Right boundary condition marker
MKRSKI	I*4	Group skipping indicator
NGRPP1	I*4	Number of groups +1
NUMCMP	I*4	Number of compositions
NUMPAG	I*4	Page counter
NIL	I*4	Number of finite directions (integration limits per region)
IPROB	I*4	Type of problem: 1 = Inhomogeneous, 2 = k_{eff} convergence, 3 = Concentration search, 4 = Buckling search, 5 = α search, 6 = Dimension search
MKRGEO	I*4	Geometry type marker
MKRTHY	I*4	Solution type marker (adjoint or real)
NINTI	I*4	Number of intervals
NUMDIR	I*4	Number of directions

/DDUFFY/

Variables used from this common block

Name	Type	Definition
IMDCMP	I*4	Pointer for array of compositions to be modified
ICPMOD	I*4	Pointer for array of composition modifiers
IMC	I*4	Pointer for array of composition indices

/POINT/

Variables used from this common block

Name	Type	Definition
IDIRMU	I*4	Pointer for array of direction cosines
IFLXIN	I*4	Pointer for array of scalar flux
IGCNVE	I*4	Pointer for array of velocity
IGEORM	I*4	Pointer for array of radius modifiers
ISRCDI	I*4	Pointer for array of distributed source
ISRCSH	I*4	Not used
IREGNM	I*4	Pointer for array of region names
IDIRWG	I*4	Pointer for array of direction weights
IINPRE	I*4	Pointer for array of region-to-mesh correspondence
IMKRSK	I*4	Pointer for array of groups to be skipped when group-skipping option is used
ICMPNM	I*4	Pointer for array of composition names
ISRCFI	I*4	Pointer for array of fission neutrons
ICSCFA	I*4	Pointer for array of density factors
IGEORD	I*4	Pointer for array of initial radii

Name	Type	Definition
IINPCM	I*4	Pointer for array of composition-to-mesh correspondence
ISRCAS	I*4	Not used

/EXTPNT/

Variables used from this common block

Name	Type	Definition
IINPCR	I*4	Pointer for composition index array
ILNOAN	I*4	Pointer for anisotropic scattering array
ILETH	I*4	Pointer for array of lethargy boundaries for groups
INAMAN	I*4	Pointer for array of composition labels for which ℓ numbers are to be specified
IEN	I*4	Pointer for array of energy boundaries for groups

/SIMIN3/

Variables used from this common block

Name	Type	Definition
NORONE	I*4	Number of groups for matrix calculation, 1 for vector calculation
N	I*4	Fission spectrum flag

/DSRNOS/

Variables used from this common block

Name	Type	Definition
NCDINP	I*4	DSRN of data set SP.T1NEW
NESD1D	I*4	DSRN of data set ES.D1D

Name	Type	Definition
NBCD1	I*4	DSRN of data set BC
NOUT	I*4	DSRN of output data set
NFSD1	I*4	DSRN of data set FSR.D1
NSPCRT	I*4	DSRN of data set SP.CRIT
NININP	I*4	DSRN of data set SP.CICN
NESD1S	I*4	DSRN of data set ES.D1SH
NXSISO	I*4	DSRN of data set XS.ISO

/DSRNO2/

Variables used from this common block

Name	Type	Definition
NFAD1A	I*4	DSRN of data set FA.D1A
NJRD1	I*4	DSRN of data set JR.D1
NFAD1	I*4	DSRN of data set FA.D1
NFRD1A	I*4	DSRN of data set FR.D1A
NFSAD1	I*4	DSRN of data set FSA.D1
NJAD1	I*4	DSRN of data set JA.D1

/NAMES/

Variables used from this common block

Name	Type	Definition
DEN	R*8	Name of the group energy boundary array
DLETH	R*8	Name of the group lethargy boundary array
DLNOAN	R*8	Name of array of the ℓ numbers to be specified
DNAMAN	R*8	Name of array of the composition labels for which ℓ numbers are to be specified

Name	Type	Definition
DININP	R*8	Name of the module-independent input data set, SP.CICN
DFRD1	R*8	Name of the real scalar flux data set, FR.D1
DSPCRT	R*8	Name of the criticality search data set, SP.CRIT
DFLXIN	R*8	Name of array of the total scalar flux
DGCNVE	R*8	Name of array of the velocity
DINPRE	R*8	Name of array of the region-to-mesh correspondence
DTR1D	R*8	Name of the module-dependent input data set, SP.T1NEW
DESD1S	R*8	Name of the shell source data set, ES.D1SH
DXSISO	R*8	Name of the isotope cross-section data set, XS.ISO
DCSCFA	R*8	Name of array of the density factors
DSRCFI	R*8	Name of array of the fission neutrons
DGEORD	R*8	Name of array of the initial radii
DDIRMU	R*8	Name of array of the direction cosines
DINPCM	R*8	Name of array of the composition-to-mesh correspondence
DMKRSK	R*8	Name of array of the groups to be skipped
DESD1D	R*8	Name of the distributed source data set, ES.D1D
DBCD1	R*8	Name of the boundary condition data set, BC
DGEORM	R*8	Name of array of the radius modifiers
DDIRWG	R*8	Name of the array of direction weights
DFSD1	R*8	Name of the real fission source data set, FSR.D1

Name	Type	Definition
DGEOM	R*8	Name of the geometry data set, GEOM
DSRCDI	R*8	Name of array of the distributed source

/NAMADJ/

Variables used from this common block

Name	Type	Definition
DFAD1	R*8	Name of the adjoint group flux data set, FA.D1
DFSAD1	R*8	Name of the adjoint fission source data set, FSA.D1

/MAXARY/

Variables used from this common block

Name	Type	Definition
MAXA	I*4	Container array size

/SIMIN2/

Variables used from this common block

Name	Type	Definition
MKRANS	I*4	Anisotropic scattering flag, indicating number of compositions for which the ℓ numbers are given
ITERFL	I*4	The iteration number of this set of real or adjoint fluxes
KINDFS	I*4	2 for real calculation, 4 for adjoint calculation
KINDFL	I*4	Same as KINDFS
ITERFS	I*4	The iteration number of this set of real or adjoint fission source

/ARRAY/

Variables used from this common block

Name	Type	Definition
A (60000 fast/ 120000 bulk)	R*8	Container array

/TIMER/

Variables used from this common block

Name	Type	Definition
TI	R*4	Clock time
TIME	R*4	Clock time

/LOCATE/

Variables used from this common block

Name	Type	Definition
LSTLOC	I*4	Present location in the container array

/BUFFER/

Variables used from this common block

Name	Type	Definition
BUF(20)	I*4	Buffer size

/ISANIS/

Variables used from this common block

Name	Type	Definition
MKRFLX	I*4	Angular flux printout flag

3. Local Variables

Name	Type	Definition
NFS	I*4	Dummy variable for NFSD1 or NFSAD1
IPTR	I*4	Flag for obtaining POINTR dumps
DPARK	R*8	k_{fixed}
LUMMY	I*4	Error return from POINTR
N1	I*4	Dimension of the scalar flux or source arrays (NINTI*NGROUP)
LSPR	I*4	Length of search specification record (2,3, or 4 of SP.CRIT)
DUMMY	R*8	Dummy variable for the eigenvalue that corresponds to this set of the fluxes
KSRCH	R*8	Calculation type
LZONE	I*4	Length of record type 7 of data set GEOM
DCPMOD	R*8	Variable array name of composition modifier
DMDCMP	R*8	Variable array name of compositions to be modified
N2	I*4	Same as LSPR
NIN	I*4	NINTI
LAREA	I*4	Length of record type 6, data set GEOM
DMC	R*8	Variable array name of the compositions
NFR	I*4	Dummy data set reference number for real or adjoint flux data set
DEPS	R*8	Variable array name for convergence criteria
DPARA	R*8	Alpha

Name	Type	Definition
NINTJ	I*4	Number of intervals in J-direction
NDIMEN	I*4	Number of dimensions
NORDER	I*4	SN order

4. Functions and tasks performed by this subroutine

This subroutine processes all input data sets necessary for the 1-D transport theory computation module interface, with the exception of those which relate to cross-sections. The routine zeroes out common blocks, sets clock time and sets up initial values for POINTR.

The following records are read from the indicated data sets, either in this routine or by the indicated calls to those routines which do the processing.

(1) File one of module-independent input (SP.CICN) is read.

(2) File one of module-dependent input (SP.T1NEW) is read.

(3) Weights and cosines are processed through a call to subroutine READB2.

(4) Anisotropic component list is processed from SP.T1NEW through a call to subroutine READI2 (entry in READBL).

(5) Density factors are read from SP.T1NEW (if necessary) through a call to READB1 (entry in READB2).

(6) If necessary, diffusion theory indicators or group-skipping indicators are read from SP.T1NEW through a call to entry point READI1 of READB2.

(7) File one of data set ES.D1D is read if distributed sources are given.

(8) Distributed sources, if any, are read by a call to subroutine READB3.

(9) Fission sources and/or fluxes, from FSRD1 and/or FR.D1 or from FSA.D1 and/or FA.D1 depending on whether they are real or adjoint, are read through calls to READB3.

(10) A call to READB1 (entry in READB2) reads in shell sources from data set ES.D1SH, if they exist.

(11) Boundary conditions are read from data set BC.

(12) The geometry tables are processed (connecting radii, regions and compositions) by reading the records of data set GEOM. Labels are read through a call to READR9.

(13) If necessary, modifiers for a criticality search are read,

(a) KSRCH and LSPR from data set SP.CRIT and either

(b) interval modifiers from data set SP.CRIT through a call to READZT (entry in READB2) or,

(c) if the search is on compositions, composition search data from SP.CRIT through a call to READCR (entry in READB2).

(14) If velocities are defined they are processed by reading data set XS.ISO through calls to READVL (entry in READB2). Storage for these arrays is set up in this routine. The container array is checked several times for overflow. Processing is terminated if there is an overflow of the container array.

5. Subprograms called by this subroutine

COMZER	NUPAGE
CLOCK (IBM routine)	READB3
SNUFF	RITER1 (entry in READB3)
ARCERR	PUTPNT (entry in POINTR)
POINTR	GETPNT (entry in POINTR)
READB2	READR9 (entry in READB2)
READI2 (entry in READBL)	READZT (entry in READB2)
READB1 (entry in READB2)	READCR (entry in READB2)
READI1 (entry in READB2)	READVL (entry in READB2)
RITER (entry in READB2)	RITEVL (entry in READB2)
DUMP (entry in POINTR)	WIPOUT (entry in POINTR)

6. Subprograms calling this subroutine

Main program for SNARC1D (NUC003)

7. Error messages generated by this subroutine

ERROR IN MODULE NUC003 ± nnnnn

where ± nnnnn is

Message Number	Reason
-1001	Module-independent input binary data set SP.CICN is missing.

Message Number	Reason
-1002	Unexpected end-of file on dat set SP.CICN.
-1003	Error in reading data set SP.CICN.
-1004	No module-dependent data set SP.T1NEW is present.
-1005	Unexpected end-of-file on data set SP.T1NEW.
-1006	Error in reading data set SP.T1NEW.
-1007	No end-of-file after record 1 on data set SP.T1NEW.
-1008	Error in reading for end-of-file after record 1 on data set SP.T1NEW.
-1009	POINTR could not allocate space for array DDIRMU.
-1010	POINTR could not allocate space for array DDIRWG.
-1011	POINTR could not allocate space for array DNAMAN.
-1012	POINTR could not allocate space for array DCSCFA.
-1013	POINTR could not allocate space for array DMKRSK.
-1014	Container array overflow.
-1015	Unexpected end-of-file on first record of data set ES.D1D.
-1016	Error in reading first record of data set ES.D1D.
-1017	POINTR could not allocate space for array DSRCDI.
-1018	Unexpected end-of-file on data set FR.D1.
-1019	Error in reading data set FR.D1.
-1020	FR.D1 does not indicate a transport theory solution.
-1021	POINTR could not allocate space for array DSRCFI.
-1022	No real or adjoint scalar flux or fission source data is available from FR.D1, FA.D1, FSR.D1, or FSA.D1.
-1023	Unexpected end-of-file on real or adjoint flux data set FR.D1 or FA.D1.

Message Number	Reason
-1024	Error in reading real or adjoint flux data set FR.D1 or FA.D1.
-1025	The first record of FR.D1 or FA.D1 indicates that this is not a transport theory solution.
-1026	POINTR could not allocate space for array DFLXIN.
-1027	Unexpected end-of-file on first record of data set ES.D1SH.
-1028	Error in reading first record of data set ES.D1SH.
-1029	POINTR could not allocate space for VSUR1.
-1030	POINTR could not allocate space for VSUR2.
-1031	Unexpected end-of-file on first record of data set BC.
-1032	Error in reading first record of data set BC.
-1033	Data set BC is missing.
-1034	Unexpected end-of-file on first record of set GEOM.
-1035	Error in reading first record of data set GEOM.
-1036	Data set GEOM is missing.
-1037	POINTR could not allocate space for DBSQ.
-1038	Container array overflow.
-1039	Data set SP.CRIT is missing for a dimension search.
-1040	Unexpected end-of-file on first record of data set SP.CRIT for a dimension search.
-1041	Error in reading first record of data set SP.CRIT for a dimension search.
-1042	POINTR could not allocate space for DGEORM.
-1043	Data set SP.CRIT is missing for a composition search.
-1044	Unexpected end-of-file on first record of data set SP.CRIT for a composition search.
-1045	Error in reading first record of data set SP.CRIT for a composition search.

Message Number	Reason
-1046	POINTR could not allocate space for DCPMOD.
-1050	Data set XS.ISO is not present and IPROB (from SP.CICN) is 5, indicating an alpha search.
-1051	Unexpected end-of-file on first or second record of data set XS.ISO.
-1052	Error in reading first or second record of data set XS.ISO.
-1053	POINTR could not allocate space for DGCNVE.
-1054	Container array overflow.
-1055	POINTR could not allocate space for DLNOAN.
-1056	User has specified alpha search and fixed k_{eff} on data set SP.CICN. This is not allowed.
-1057	FA.D1 or FSA.D1 is present for a real solution, or FA.D1 or FSA.D1 is not present for an adjoint solution.
-1058	FR.D1 or FSR.D1 is not present for real solution.
+1059	Real data from FR.D1 or FSR.D1 is to be used instead of adjoint input for adjoint calculation (nonterminating error).
-1060	No fission source or flux data is available from FR.D1, FSR.D1, FA.D1, or FSA.D1.
-1061	SP.CRIT data does not indicate an I-direction search, and SP.CICN specified one.
-1062	Length of specification record on SP.CRIT for a dimension search does not agree with number of intervals defined for the problem.
-1063	Number of intervals defined on SP.CRIT does not agree with the number defined for the problem.
-1065	Data set XS.ISO is not present and IMKKA=2, indicating an alpha calculation.

Subroutine READAN (SCAT,CSC,NREC,LASCTP,NCSCSP,NGROPP)

1. Arguments

Name	Type	Dimension	Definition
SCAT	R*8	LASCTP* NGROPP	Self-scattering
CSC	R*8	NCSCSP* NGROPP* NUMCMP	Cross-sections
NREC	I*4	--	Number of anisotropic scattering fluxes
LASCTP	I*4	--	Length of the scattering list for this order and composition
NCSCSP	I*4	--	Number of cross-sections
NGROPP	I*4	--	Number of groups

2. Common Blocks

/SIMINT/

Variables used from this common block

Name	Type	Definition
ISELF	I*4	Pointer for self-scattering cross-section
NGROUP	I*4	Number of groups
MAXUPG	I*4	Number of groups which have up-scattering (XS.C.MIN)
MKRSCT	I*4	Scattering type marker

/SIMIN3/

Variables used from this common block

Name	Type	Definition
MAXUPA	I*4	Maximum number of anisotropic up-scattering groups

Name	Type	Definition
NCBLKS	I*4	Number of composition blocks
LASCAT	I*4	Length of the scattering list for this order and composition
MAXDNA	I*4	Maximum number of anisotropic down-scattering groups

/SIMIN4/

Variables used from this common block

Name	Type	Definition
MAXDNG	I*4	Maximum number of groups which have down-scattering (XS.C.MIN)

/DSRNOS/

Variables used from this common block

Name	Type	Definition
NXSCAN	I*4	DSRN for data set XS.C.ANI

3. Local Variables

Name	Type	Definition
K1	I*4	NUSZER +4
NDSZER	I*4	MAXDNG - MAXDNA
NUSZER	I*4	MAXUPG - MAXUPA

4. Functions and tasks performed by this subroutine

This subroutine reads and stores NREC type 3 records from data set XS.C.ANI and sets MKRSCT = -1. NCBLKS is incremented as the anisotropic components are stored.

A test is made to determine the difference between the maximum number of groups which upscatter and downscatter in the entire set and the number

of groups which upscatter and downscatter into the group which we are storing at a particular time. This is done so that we may put zeroes into our cross-section array for those groups which do not scatter into the group with which we are working.

5. Subprograms called by this subroutine

ARCERR

6. Subprograms calling this subroutine

READXS

7. Error messages generated by this subroutine

ERROR IN MODULE NUC003 ± nnnnn

where ± nnnnn is

Message Number	Reason
-9001	Unexpected end-of-file on record type 3 of file 2 of data set XS.C.ANI.
-9002	Error in reading record type 3 of file 2 of data set XS.C.ANI.
-9003	Maximum number of upscattering groups on record 1 of XS.C.MIN is less than the maximum number of groups with anisotropic upscattering specified on record 1 of XS.C.ANI.
-9004	Maximum number of downscattering groups on record 1 of XS.C.MIN is less than the maximum number of groups with anisotropic downscattering specified on record 1 of XS.C.ANI.

Subroutine READBL (D1, N, M, NODS)

Entry Points

Entry READI2 (I2, I3, N, NODS)

1. Arguments.

Name	Type	Dimension	Definition
D1	R*8	N*M	Set-wide fission spectrum
N	I*4	--	Set-wide fission spectrum marker or anisotropic scattering marker
M	I*4	--	Number of groups for first entry; number of compositions for second
NODS	I*4	--	Data set reference number of XS.C.MIN or SP.T1NEW
I2	I*4	N	Composition labels for which ℓ numbers are to be specified
I3	I*4	N	ℓ numbers to be specified

2. Common Blocks - None

3. Local Variables - None

4. Functions and tasks performed by this subroutine

This subroutine reads data from the second record of data set XS.C.MIN. In the argument list D1 refers to the array being read (set-wide CHI), N is NGROUP or 1, M is NGROUP, and NODS is the data set reference number NXSCMN.

Entry point READI2 processes (reads) the anisotropic component list from the new module-dependent input (data set SP.T1NEW). In the argument list, I2 refers to the array of composition numbers for which ℓ numbers are specified. I3 is the array of ℓ numbers to be used, N is MKRANS, and NODS is the data set reference number NCDINP.

5. Subprograms called by this subroutine

ARCERR

6. Subprograms calling this subroutine

READBL is called by READXS
READI2 is called by PROCDS

7. Error Messages generated by this subroutine

ERROR IN MODULE NUC003 ± nnnnn

where ± nnnnn is

Message Number	Reason
-4001	Unexpected end-of-file on second record of file 2 on SP.T1NEW.
-4002	Error in reading second record of file 2 on SP.T1NEW.

Subroutine READB2 (D1, D2)

Entry Points

```
Entry READB1 (D1, N, NOOFDS)
Entry READI1 (I1, N, NOOFDS)
Entry READZT (D1, N, NOOFDS)
Entry READVL (D1, D2, D3, NOOFDS, N, M)
Entry READCR (MC, NOOFDS)
Entry READR9 (D1, D2, NOOFDS)
Entry RITER (I1, N)
Entry RITEVL (D1)
```

1. Arguments

Name	Type	Dimension	Definition
D1	R*8	N	Data to be read or written
D2	R*8	N	Direction cosine
NOOFDS	I*4	--	Data set reference number of the data set to be read
I1	I*4	N	Data to be read or written
N	I*4	--	Number of groups
D3	R*8	N	Data to be read

Name	Type	Dimension	Definition
M	I*4	--	Number of groups + 1
MC	I*4	--	Composition number which is to be used as a pseudo-composition for a composition I

2. Common Blocks

/DSRNOS/

Variables used from this common block

Name	Type	Definition
NCDINP	I*4	DSRN of data set SP.T1NEW
NOUT	I*4	DSRN of output data set

/SIMINT/

Variables used from this common block

Name	Type	Definition
NUMREG	I*4	Number of regions
NGROUP	I*4	Number of groups
NUMCMP	I*4	Number of compositions
NUMDIR	I*4	Number of directions

3. Local Variables

Name	Type	Definition
K	I*4	Dummy variable for fission spectrum flag

4. Functions and tasks performed by this subroutine

This subroutine reads in data from several data sets. This is accomplished by calling the several entry points in the routine and passing the appropriate information through the argument of the entry point. The dummy data set reference number (NOOFDS) refers to whichever true data set reference number is passed by the calling routine.

The main entry, READB2, allows reading of data set SP.T1NEW.

Entry READB1 allows reading of data set ES.D1SH.

Entry READI1 provides the reading of a record of data set SP.T1NEW.

Entry READZT is used for the reading of data set SP.CRIT.

Entry READVL reads a record of data set XS.ISO.

Entry READCR reads a record of data set SP.CRIT.

Entry READR9 reads the ninth record of data set GEOM.

Entry RITER writes a record under format control on the output data set, whose data set reference number is NOUT.

5. Subprograms called by this subroutine

ARCERR

6. Subprograms calling this subroutine

READB2 is called by PROCDS	READCR is called by PROCDS
READB1 is called by PROCDS	READR9 is called by PROCDS
READI1 is called by PROCDS	RITER is called by PROCDS
READZT is called by PROCDS	RITEVL is called by PROCDS
READVL is called by PROCDS	

7. Error messages generated by this subroutine

ERROR IN MODULE NUC003 ± nnnnn

where ± nnnnn is

Message Number	Reason	Entry Name
-1998	Error in reading first record of file 2 of SP.T1NEW.	READB2
	Error in reading third record of file 1 of SP.T1NEW.	READB1
	Error in reading fourth or fifth record of file 2 of SP.T1NEW.	READI1
	Error in reading second record (type 3) of SP.CRIT for a dimension search.	READZT
	Error in reading third record of file 1 of XS.ISO.	READVL
	Error in reading second record (type 2) of SP.CRIT for a composition search.	READCR

Message Number	Reason	Entry Name
-1999	Unexpected end-of-file on first record of file 2 of SP.T1NEW.	READB2
	Unexpected end-of-file on third record of file 1 of SP.T1NEW.	READB1
	Unexpected end-of-file on fourth or fifth record of file 2 of SP.T1NEW.	READI1
	Unexpected end-of-file on second record (type 3) of SP.CRIT for a dimension search.	READZT
	Unexpected end-of-file on third record of file 1 of XS.ISO.	READVL
	Unexpected end-of-file on second record (type 2) of SP.CRIT for a composition search.	READCR

Subroutine READB3 (D3, N, NODS, M)

Entry Points

Entry RITER1 (D3, N, M)

1. Arguments

Name	Type	Dimension	Definition
D3	R*8	N*M	Array being read
N	I*4	--	Number of intervals
NODS	I*4	--	Data set reference number
M	I*4	--	Number of groups

2. Common Blocks

/DSRNOS/

Variables used from this common block

Name	Type	Definition
NOUT	I*4	DSRN of output data set

3. Local Variables - None

4. Functions and tasks performed by this subroutine

This subroutine reads the real or adjoint fission source data from data set FSR.D1 or FSA.D1. It also reads the real or adjoint flux data from data set FR.D1 or FR.D1A.

Entry RITER1 writes the non-zero elements of the input flux or the fission neutrons, whichever is passed into the routine through the argument list of this entry point, into separate records of the output data set.

5. Subprograms called by this subroutine

ARCERR

6. Subprograms calling this subroutine

READB3 is called by PROCDS
RITER1 is called by PROCDS

7. Error messages generated by this subroutine

ERROR IN MODULE NUC003 ± nnnnn

where ± nnnnn is

Message Number	Reason
-1998	Error in reading second record of ES.D1D, FSR.D1, FSA.D1, FR.D1, or FA.D1.
-1999	Unexpected end-of-file on second record of ES.D1D, FSR.D1, FSA.D1, FR.D1, or FA.D1.

Subroutine READCP (NUP, NDN, A, M. NEXBLK, NCSC)

1. Arguments

Name	Type	Dimension	Definition
NUP	I*4	NGROUP	Number of upscattering groups for this composition

Name	Type	Dimension	Definition
NDN	I*4	NGROUP	Number of downscattering groups for this composition
A	R*8	60,000 fast core 120,000 bulk core	Container array
M	I*4	--	Composition number
NEXBLK	I*4	--	The number of extra cross-section blocks currently needed for anisotropic components when NAMANS and LNOANS exist
NCSC	I*4	--	The current cross-section array size

2. Common Blocks

/DSRNOS/

Variables used from this common block

Name	Type	Definition
NXSCMN	I*4	DSRN of data set XS.C.MIN
NXSCAN	I*4	DSRN of data set XS.C.ANI

/ISANIS/

Variables used from this common block

Name	Type	Definition
ISANIS	I*4	Anisotropic scattering flag

/SIMINT/

Variables used from this common block

Name	Type	Definition
NCSCS	I*4	Number of cross-sections
NGROUP	I*4	Number of groups
NUMCMP	I*4	Number of compositions

/SIMIN3/

Variables used from this common block

Name	Type	Definition
MAXUPA	I*4	Maximum number of anisotropic scattering groups
LASCAT	I*4	Length of the scattering list for this order and composition
MKRCMP	I*4	Fission spectrum flag of this composition
LNO	I*4	Maximum scattering order of this composition
MAXDNA	I*4	Maximum number of anisotropic downscattering groups
N	I*4	Anisotropic scattering flag
NUMSCT	I*4	Number of anisotropic scattering fluxes needed

/EXTPNT/

Variables used from this common block

Name	Type	Definition
ILNOAN	I*4	Pointer for array of anisotropic scattering order for a composition
INAMAN	I*4	Pointer for array of composition labels for which ℓ numbers are to be specified

3. Local Variables - None

4. Functions and tasks performed by this subroutine

This subroutine reads the type 3 record from XS.C.MIN for composition M. It also reads the type 2 record from XS.C.ANI for the given composition. It determines whether the ℓ number is big enough to take care of the user's request for LNOANS order of scattering for composition NAMANS. NAMANS(I) (I=1,2,...,NUMCMP) gives the composition numbers (I=1,2,...,NUMCMP) for which the user wishes to specify some order of scattering as given in LNOANS(I). It is assumed that each composition has at least self-scattering.

5. Subprograms called by this subroutine

GETLNO
ARCERR

6. Subprograms calling this subroutine

READXS

7. Error messages generated by this subroutine

ERROR IN MODULE NUC003 ± nnnnn

where ± nnnnn is

Message Number	Reason
-7001	Unexpected end-of-file on third record of file 1 of data set XS.C.MIN.
-7002	Error in reading third record of file 1 of data set XS.C.MIN.
-7003	Unexpected end-of-file on second record of file 2 of data set XS.C.ANI.
-7004	Error in reading second record of file 2 of data set XS.C.ANI.
+7005	ℓ number from XS.C.ANI is greater than 2, indicating scattering of an order higher than linear. This option is not currently available. Linear scattering will be used.

Subroutine READT4 (M, J, NUP, NDN, SCTISO, CSC, CHI, CHT, NCSCSP, NGROPP, NORONP, ISTCI, ISTMT, ITEMP)

1. Arguments

Name	Type	Dimension	Definition
M	I*4	--	Composition number
J	I*4	--	Group number
NUP	I*4	--	Number of upscattering groups for this composition
NDN	I*4	--	Number of downscattering groups for this composition

Name	Type	Dimension	Definition
SCTISO	R*8	7+NDN+NUP+ NGROPP+1	Group constants of record type 4, data set XS.C.MIN
CSC	R*8	NCSCSP*NGROPP* NUMCMP	Cross-sections
CHI	R*8	NORONP*NGROPP* NFBLKS	Fission spectrum (χ)
CHT	R*8	NORONP*NGROPP	Fission spectrum from group I into group J
NCSCSP	I*4	--	Number of cross sections
NGROPP	I*4	--	Number of groups
NORONP	I*4	--	1 if vector calculation, NGROUP if matrix
ISTCI	I*4	--	Index in the table INPFBC for composition M (composition M has a fission vector)
ISTMT	I*4	--	Index in the table INPFBC for composition M (composition M has a fission matrix)
ITEMP	I*4	--	Scattering flag, 0 for isotropic and 1 for anisotropic scattering

2. Common Blocks

/DSRNOS/

Variables used from this common block

Name	Type	Definition
NSXCMN	I*4	DSRN of data set XS.C.MIN

/SIMINT/

Variables used from this common block

Name	Type	Definition
ISELF	I*4	Pointer for self-scattering cross-section
NGROUP	I*4	Number of groups

Name	Type	Definition
MAXUPG	I*4	Maximum number of groups which have up-scattering

/SIMIN3/

Variables used from this common block

Name	Type	Definition
IADDRS	I*4	Present address in the scattering array for this composition
NCBLKS	I*4	Number of composition blocks
IFFLAG	I*4	Flag which denotes length of record 4, data set XS.C.MIN
NFBLKS	I*4	Number of fission blocks
N	I*4	Anisotropic scattering flag

/SIMIN4/

Variables used from this common block

Name	Type	Definition
MAXDNG	I*4	Maximum number of groups which downscatter
NFAM	I*4	Number of families of delayed neutrons

3. Local Variables

Name	Type	Definition
NDNSCT	I*4	Number of downscattering groups for a composition
IUPDN	I*4	Scattering type indicator
LENGTH	I*4	Length of record type 4, data set GEOM
NDSZER	I*4	Number of zeros to be put at the end of downscattering cross-section
K1	I*4	NUSZER + 4
JTEMP	I*4	Group number
NUPSCT	I*4	Number of upscattering groups

Name	Type	Definition
NUSZER	I*4	Number of zeros to be put at the beginning of upscatter cross sections

4. Functions and tasks performed by this subroutine

This subroutine reads record type 4 from data set XS.C.MIN for a group J.

The record may or may not have groups which upscatter or downscatter into it. Hence, there may or may not be upscatter or downscatter cross-sections for some groups. IUPDN is set depending on the scattering cross-sections available. This is determined from record type 3 of this data set. A marker IADDRS is set to the position of the first upscatter element within SCTISO, if there is upscattering. Otherwise, it is the address of the self-scatter term within SCTISO.

The length of the record (LENGTH) is calculated and the record is read. The record (SCTISO(I), I=1, LENGTH) is sotred in the cross-section array in the following manner. The absorption cross-section, the removal cross-sections and the total or transport cross-sections are put into the cross-section array. The fission and ν*fission cross-sections are stored also, if they are present in the record. The fission spectra (CHI) are stored in the appropriate array (CHI vector or matrix) if they are present.

The scattering cross-sections are stored in the following manner.

The number of "garbage" zeros (NUSZER and NDNZER) are calculated and if NUSZER $\neq$ 0 zeros are stored in the cross-section array at the beginning of the upscattering cross-section entries in the array for those groups which do not upscatter into the present group. The upscatter cross-sections are then stored in the array from SCTISO(I).

The self-scatter cross-section is then sotred in the cross-section array.

The downscattering cross-sections are then stored in the cross-section array. If NDNZER $\neq$ 0, zeros are stored in the cross-section array for those groups which do not downscatter into the present group.

5. Subprograms called by this subroutine

ARCERR

6. Subprograms calling this subroutine

READXS

7. Error messages generated by this subroutine

ERROR IN MODULE NUC003 ± nnnnn

where ± nnnnn is

Message Number	Reason
-8001	Records type 2 and 4 of file 2 of XS.C.MIN are inconsistent with respect to fission spectrum flags.
-8002	Unexpected end-of-file on a record type 4 of file 2 of data set XS.C.MIN.
-8003	Error in reading a record type 4 of file 2 of data set XS.C.MIN.
-8004	Group records type 4 of file 2 of XS.C.MIN are not in expected order.
-8005	Maximum number of upscattering groups on record 1 of XS.C.MIN is less than the number of upscattering groups specified on a record type 3 of file 2 of XS.C.MIN.
-8006	Maximum number of downscattering groups on record 1 of XS.C.MIN is less than the number of downscattering groups specified on a record type 3 of file 2 of XS.C.MIN.
-8007	Unexpected end-of-file on record type 4 of file 2 of data set XS.C.MIN while attempting to read prompt and delayed data.
-8008	Error in reading record type 4 of file 2 of data set XS.C.MIN for prompt and delayed data.

Subroutine READXS (A,LNOANS)

1. Arguments

Name	Type	Dimension	Definition
A	R*8	60,000 fast core 120,000 bulk core	Container array

Name	Type	Dimension	Definition
LNOANS	I*4	NUMCMP	Anisotropic scattering order for a composition

2. Common Blocks

/SIMINT/

Variables used from this common block

Name	Type	Definition
ISELF	I*4	Pointer for self-scattering cross-section
NCSCS	I*4	Number of cross-sections
NUMREG	I*4	Number of regions
NGROUP	I*4	Number of groups
ITOTAL	I*4	Position of total source
NGRPP1	I*4	Number of groups + 1
NUMCMP	I*4	Number of compositions
NUMKIM	I*4	χ matrix indicator
MAXUPG	I*4	Number of groups which have upscattering (XS.C.MIN)
MKRSCT	I*4	Scattering type marker
MKRTHY	I*4	Solution type marker (adjoint or real)
NINTI	I*4	Number of intervals
NUMKIV	I*4	χ vector indicator

/POINT/

Variables used from this common block

Name	Type	Definition
IFLXIN	I*4	Pointer for array of scalar flux
IGCNVE	I*4	Pointer for array of velocity
ISRCDI	I*4	Pointer for array of distributed source

Name	Type	Definition
ISRCSH	I*4	Not used
ICSC	I*4	Pointer for array of cross-sections
ISRCAS	I*4	Not used

/ISANIS/

Variables used from this common block

Name	Type	Definition
ISANIS	I*4	Anisotropic scattering flag

/DDUFFY/

Variables used from this common block

Name	Type	Definition
IMC	I*4	Pointer for array of composition-mesh correspondence used in concentration searches

/EXTPNT/

Variables used from this common block

Name	Type	Definition
IINPCR	I*4	Pointer for array of composition-to-region correspondence

/DSRNOS/

Variables used from this common block

Name	Type	Definition
NXSCMN	I*4	DSRN data set XS.C.MIN
NXSCAN	I*4	DSRN data set XS.C.ANI

/NAMES/

Variables used from this common block

Name	Type	Definition
DCSC	R*8	Name of array of the cross-sections
DGCNVE	R*8	Name of array of the velocities
DINPCR	R*8	Name of array of the composition to region correspondence
DXSCMN	R*8	Name of composition cross-section data set, XS.C.MIN

/SIMIN2/

Variables used from this common block

Name	Type	Definition
MKRANS	I*4	Anisotropic scattering flag, indicating number of compositions for which the ℓ numbers are given

/EXTPT2/

Variables used from this common block

Name	Type	Definition
INUP	I*4	Pointer for array of groups which have up-scattering
IINPFC	I*4	Pointer for the array of fission blocks
ICHI	I*4	Pointer for array of fission spectrum
ICHT	I*4	Pointer for array of set-wide χ
ISCAT	I*4	Pointer for the self-scattering array
IINPLN	I*4	Pointer for the ℓ number array
ISCTIS	I*4	Pointer for the position of the cross-section information written into record type 4 of data set XS.C.MIN
IINPBI	I*4	Pointer for array of composition blocks

/NAMES2/

Variables used from this common block

Name	Type	Definition
DNUP	R*8	Name of the array of the number of groups of upscattering
DSCTIS	R*8	Name of the array of the isotropic scattering
DINPFC	R*8	Name of array of the fission blocks
DNDN	R*8	Name of the array of the groups of downscattering
DCHT	R*8	Name of array of the set-wide CHI (fission fraction spectrum from group I into group J)
DCHI	R*8	Name of the array of the χ
DINPLN	R*8	Name of the array of ℓ numbers
DSCAT	R*8	Name of the scattering cross-section array
DINPBI	R*8	Name of array of the composition blocks

/SIMIN3/

Variables used from this common block

Name	Type	Definition
IMKVEC	I*4	Vector calculation flag
NCBLKS	I*4	Number of composition blocks
IFFLAG	I*4	Flag which denotes length of record 4, data set XS.C.MIN
LASCAT	I*4	Length of the scattering list for this order and composition
MKRCMP	I*4	Fission spectrum flag of this composition
NFBLKS	I*4	Number of fission blocks
IMKMAT	I*4	Matrix calculation flag
LNO	I*4	Maximum scattering order of this composition
MKRSET	I*4	Fission spectrum flag

Name	Type	Definition
NORONE	I*4	Number of groups for matrix calculation, 1 if vector calculation
N	I*4	Anisotropic scattering flag
NUMSCT	I*4	Number of anisotropic scattering fluxes needed

/SIMIN4/

Variables used from this common block

Name	Type	Definition
MAXDNG	I*4	Maximum number of groups which downscatter (XS.C.MIN)
NFAM	I*4	Number of families of delayed neutrons

3. Local Variables

Name	Type	Definition
IT	I*4	NGROUP*(2*NGROUP+1)
NCOM	I*4	Number of compositions in the entire set
ISTCI	I*4	Index in the table INPFBC for composition M (composition M has a fission vector)
LUMMY	I*4	POINTR error flag
NGP	I*4	Number of energy groups
MAXD	I*4	Maximum number of down-scattering groups (XS.C.ANI)
NCSC	I*4	Number of cross-sections
ISTMT	I*4	Index in the table INPFBC for composition M (composition M has a fission matrix)
NFCMP	I*4	Number of fissionable compositions
N1	I*4	(1 or NGROUP)*NGROUP
INDN	I*4	Number of down-scattering groups
MAXU	I*4	Maximum number of upscattering groups (XS.C.ANI)

Name	Type	Definition
IP	I*4	3*NGROUP+7
NCMP	I*4	NUMCMP

4. Functions and tasks performed by this subroutine

This subroutine reads and stores minimal and anisotropic composition level cross-section data (data sets XS.C.ANI and XS.C.MIN). It is also the control routine for the calls to various other subroutines, as shown in subsection 5 below.

Data set XS.C.MIN is always read. The routine reads the first record of XS.C.MIN and the end-of-file. It has the other records processed by calls to other routines, which do the mechanics of processing and storing the information provided by the data set. Subroutine READBL processes record 2 if there is a set wide CHI vector or matrix.

After the set CHI has been read or has been found not to exist, the first record of XS.C.ANI and the end-of-file are read if anisotropic scattering exists. The extra blocks needed for anisotropic components are defined and the size of the cross-section block is computed and storage reserved.

The cross section and fission spectrum data are then read from XS.C.MIN. No more than NUMCMP compositions will be read, as specified in data set GEOM. The composition block counters, NCBLKS and NFBLKS, are initialized and incremented as we read corresponding pertinent records: i.e., if the composition is not fissionable NFBLKS is not incremented.

NGROUP records of type 4 from XS.C.MIN are read and stored through calls to subroutine READT4 with an appropriate argument list.

The anisotropic scattering blocks of XS.C.ANI are then read and stored for the composition. The actual reading and storing is done through calls to subroutine READAN with an appropriate argument list. If there are any records to be skipped, they are read past in this routine.

The table of ℓ numbers (INPLNO(I)) is created through a call to subroutine TABLE.

Arrays are purged to provide storage, and if an adjoint calculation is to be done certain arrays are reordered by group by calling subroutine ADJINT with an appropriate argument list. Subroutine CALLXS, which calls

subroutine TRANXS, is called. CALLXS controls TRANXS, which reorders the cross-section arrays for an adjoint calculation.

5. Subprograms called by this subroutine

SCANIS	READCP
SNUFF	REDEF
ARCERR	READT4
PUTPNT (entry in POINTR)	READAN
GETPNT (entry in POINTR)	WIPOUT (entry in POINTR)
READBL	DUMP (entry in POINTR)
CMPFLG	ADJINT
SETFBK	CALLXS
SKIPXS	IPTERR (entry in POINTR)

6. Subprograms calling this subroutine

Main program NUC003

7. Error messages generated by this subroutine

ERROR IN MODULE NUC003 ± nnnnn

where ± nnnnn is

Message Number	Reason
-3001	Data set XS.C.MIN missing.
+3002	Anisotropic scattering is indicated in SP.T1NEW but no compositions have ℓ numbers indicated (nonterminating).
-3003	Unexpected end-of-file on first record of data set XS.C.MIN.
-3004	Error in reading first record of data set XS.C.MIN.
-3005	Fission spectrum flag indicates fission and no fissionable compositions are present on XS.C.MIN.
-3006	Fission spectrum flag on XS.C.MIN does not equal 1 or NGROUP.
-3007	POINTR could not allocate space for DCHT for a χ-matrix.
-3008	POINTR could not allocate space for DCHT for a χ-vector.
-3009	Unexpected end-of-file on first record of data set XS.C.ANI.
-3010	Error in reading first record of data set XS.C.ANI.
-3011	Number of compositions with anisotropic scattering on XS.C.ANI is not equal to the number of compositions on XS.C.MIN.

Message Number	Reason
-3012	Number of groups on XS.C.MIN is not equal to the number of groups with anisotropic scattering on XS.C.ANI.
-3013	Anisotropic compositions are present on data set XS.C.ANI and the maximum ℓ number from SP.T1NEW is less than 2.
-3014	POINTR could not allocate space for DCSC.
-3015	No anisotropic scattering indicated in SP.T1NEW but anisotropic components are indicated in XS.C.ANI.
-3016	No end-of-file for first file on data set XS.C.ANI.
-3017	No end-of-file for first file on data set XS.C.MIN.
-3018	Error in reading end-of-file on data set XS.C.MIN.
-3019	Error in reading end-of-file on data set XS.C.ANI.
-3020	POINTR could not allocate space for DNUP.
-3021	POINTR could not allocate space for DNDN.
-3024	POINTR could not allocate space for DSCAT.
-3025	POINTR could not allocate space for DCHI.
-3027	POINTR could not allocate space for DINPLN.
-3028	POINTR could not allocate space for DINPBI.
-3029	POINTR could not allocate space for DINPFC.
-3033	Both χ-vectors and χ-matrices have been specified for the compositions in XS.C.MIN for vector calculations.
-3034	A composition in XS.C.MIN uses a fission spectrum matrix and no fission spectrum matrix is indicated.
-3035	Both χ-vectors and χ-matrices have been specified for the compositions in XS.C.MIN for a matrix calculation.
-3036	POINTR could not allocate space for DCHI (redefined).
-3037	Anisotropic scattering order plus 1 on XS.C.ANI is greater than the ℓ number on XS.C.ANI.
-3038	Unexpected end-of-file in reading records to be skipped on first file of data set XS.C.ANI.
-3039	Error in reading records to be skipped on first file of data set XS.C.ANI.

Message Number	Reason
-3040	POINTR could not allocate space for DCHI (redefined).

Subroutine RITEXS (A)

1. Arguments

Name	Type	Dimension	Definition
A	R*8	60,000 fast core 120,000 bulk core	Container array

2. Common Blocks

/SIMINT/

Variables used from this common block

Name	Type	Definition
NCSCS	I*4	Number of cross-sections
NGROUP	I*4	Number of groups
NUMCMP	I*4	Number of compositions

/POINT/

Variables used from this common block

Name	Type	Definition
ICSC	I*4	Pointer for array of cross-sections
ICMPNM	I*4	Pointer for array of composition names

/EXTPT2/

Variables used from this common block

Name	Type	Definition
IINPFC	I*4	Pointer for the array of fission blocks

Name	Type	Definition
ICHI	I*4	Pointer for fission spectrum array
IINPLN	I*4	Pointer for the ℓ number array
IINPBI	I*4	Pointer for array of composition blocks

/EXTPNT/

Variables used from this common block

Name	Type	Definition
IINPCR	I*4	Pointer for composition-to-region correspondence array

3. Local Variables - None

4. Functions and tasks performed by this subroutine

This routine calls NUPAGE and RITXS1, for editing for each composition.

5. Subprograms called by this subroutine

NUPAGE
RITXS1

6. Subprograms calling this subroutine

Main program NUC003

7. Error messages generated by this subroutine - None

Subroutine RITXS1 (COMP, INPBIC, M, CSC, INPFBC, INPLNO, CHI, INPCR, MC, NCSCP, NGROPP, NORONP)

1. Arguments

Name	Type	Dimension	Definition
COMP	R*8	NUMCMP	Composition names
INPBIC	I*4	NUMCMP	Composition block

Name	Type	Dimension	Definition
M	I*4	--	Present composition number
CSC	R*8	NCSCP*NGROPP* NFBLKS	Cross-sections
INPFBC	I*4	NUMCMP	Fission blocks
INPLNO	I*4	NUMCMP	ℓ numbers
CHI	R*8	NORONP*NGROPP	Fission spectrum
INPCR	I*4	NUMREG	Composition-to-region correspondence
MC	I*4	NUMCMP	Composition assigned as pseudo-composition for each composition during search
NCSCP	I*4	--	Number of cross-sections
NGROPP	I*4	--	Number of groups
NORONP	I*4	--	1 if vector calculation, NGROUP if matrix calculation

2. Common Blocks

/SIMINT/

Variables used from this common block

Name	Type	Definition
IPROB	I*4	Problem type
ISELF	I*4	Pointer for self-scattering cross-section
MAXUPG	I*4	Number of groups which have upscattering
NGROUP	I*4	Number of groups
NUMCMP	I*4	Number of compositions
NUMLIN	I*4	Line counter
NUMREG	I*4	Number of regions

/SIMIN3/

Variables used from this common block

Name	Type	Definition
NORONE	I*4	NGROUP for matrix calculation, 1 for vector calculation
N	I*4	Anisotropic scattering flag

3. Local Variables

Name	Type	Definition
LTOP	I*4	NUMBLK - 1
INDX1	I*4	Indicator for group-to-group scattering
NFBLK	I*4	Fission block of present composition
NUMBLK	I*4	ℓ number of present composition
INOX2	I*4	Indicator for group-to-group scattering
NCBLK	I*4	Composition block of present composition
ITOP	I*4	Temporary variable for INDX1 and INDX2
INGRP	I*4	Group scattering indicator
ITEMP	I*4	Temporary variable for INPCMP(I)
KTOP	I*4	ITEMP - ITOP

4. Functions and tasks performed by this subroutine

This subroutine is the cross-section output editing routine. It prints the following data for each composition:

(1) group number;

(2) absorption cross-section;

(3) transport cross-section or total cross-section (whichever is used);

(4) fission cross-section, ν*fission cross-section, and chi vector;

(5) the CHI fission fractions for the composition dependent on the incident neutron energy, along with the index on the energy group of the incident energy and the index on the energy group into which the neutrons are born;

(6) the group-to-group isotropic scattering cross-section for the composition; and

(7) the order of anisotropy and the group-to-group anisotropic scattering cross-section for the composition.

5. Subprograms called by this subroutine - None

6. Subprograms calling this subroutine

RITEXS

7. Error messages generated by this subroutine - None

Subroutine SCANIS (INPCR)

1. Arguments

Name	Type	Dimension	Definition
INPCR	I*4	NUMREG	Composition number

2. Common Blocks

/ISANIS/

Variables used from this common block

Name	Type	Definition
ISANIS	I*4	Anisotropic scattering flag

/NAMES/

Variables used from this common block

Name	Type	Definition
DXSCAN	R*8	Variable name for array of the anisotropic composition data

/DSRNOS/

Variables used from this common block

Name	Type	Definition
NXSCAN	I*4	DSRN of data set XS.C.ANI

/SIMINT/

Variables used from this common block

Name	Type	Definition
NUMREG	I*4	Number of regions

3. Local Variables

Name	Type	Definition
NCMP	I*4	Number of compositions
NINSET	I*4	Indicates the number of compositions in XS.C.MIN that have anisotropic components in XS.C.ANI
NUMANI	I*4	Number of anisotropic components
LMIN1	I*4	LNO - 1
LNO	I*4	ℓ number

4. Functions and tasks performed by this subroutine

This subroutine checks to see if any compositions needed from XS.C.MIN have anisotropic components on XS.C.ANI. If there are no compositions with anisotropic scattering (NUMANI=0) nothing is done and a return is made to the calling routine. If NUMANI $\neq$ 0 and if LNO $\geq$ 2 the routine reads the next record. The available anisotropic components will or will not be used depending on the contents of LNOANS(I).

5. Subprograms called by this subroutine

SNUFF
ARCERR

6. Subprograms calling this subroutine

READXS

7. Error messages generated by this subroutine

ERROR IN MODULE NUC003 ± nnnnn

where ± nnnnn is

Message Number	Reason
-25001	XS.C.ANI is not present.
-25010	Unexpected end-of-file on record 1 of file 1 of data set XS.C.ANI.
-25020	Error in reading record 1 of file 1 of data set XS.C.ANI.
-25030	Unexpected end-of-file on record type 2 of file 2 of data set XS.C.ANI.
-25040	Error in reading record type 2 of file 2 of data set XS.C.ANI.
-25050	Unexpected end-of-file in reading record type 3 of file 2 of data set XS.C.ANI.
-25060	Error in reading record type 3 of file 2 of data set XS.C.ANI.
-25070	Error in reading end-of-file for first file of data set XS.C.ANI.
-25075	End-of-file for first file not present on data set XS.C.ANI.

Subroutine SETADD

1. Arguments - None

2. Common Blocks

/NAMES/

Variables used from this common block

Name	Type	Definition
DSTABB	R*8	Name of array of the total reactor absorption
DSRCA	R*8	Name of array of the anisotropic source
DFLXEX	R*8	Name of array of the external flux
DGEOAT	R*8	Name of array of the geometric attenuation used in angular flux algorithms
DSRCGR	R*8	Name of array of the group source
DFLXAI	R*8	Name of array of the incoming angular flux
DSTAND	R*8	Name of array of the scalar flux summed over reactor volume, in all groups in internal I for group J, divided by group velocity
DCSCFI	R*8	Name of array of the ν*fission cross-section
DCSCIN	R*8	Name of array of the input cross-section
DSRCTI	R*8	Name of array of the total isotropic source
DCSCAB	R*8	Name of array of the absorption cross-section
DGEOA	R*8	Name of array of the area element

Name	Type	Definition
DSRCFI	R*8	Name of array of the fission neutrons
DGEOCR	R*8	Name of array of the curvature used in angular flux algorithm
DCSCGR	R*8	Name of array of the group cross-section
DSTANF	R*8	Name of array of the neutron flux
DFLXAO	R*8	Name of array of the angular outgoing flux
DSRCSC	R*8	Name of array of the scatter source
DFLXBG	R*8	Name of array of the initial flux
DFLXAT	R*8	Name of array of the total angular flux
DGEOVO	R*8	Name of array of the volume elements
DFLXA	R*8	Name of array of the angular flux
DGEOAM	R*8	Name of array of the geometric factors used in angular flux calculations
DDIRMT	R*8	Name of array of the direction mates
DSRCFG	R*8	Name of array of the fission source
DGEOSA	R*8	Name of array of the sum of geometric factors
DIXXII	R*8	Name of the array of the number of times the inner iteration maximum has been exceeded for each group
DSRCIS	R*8	Name of array of the isotropic source
DIXXNB	R*8	Name of array of the number of times the neutron balance has exceeded the inner loop convergence criterion
DFLXS	R*8	Name of array of the flux for the present iteration

Name	Type	Definition
DGEOAV	R*8	Name of array of the midpoints of the mesh intervals
DGEORM	R*8	Name of array of the radius modifiers
DSTASS	R*8	Name of array of the self-scattering
DSTASD	R*8	Name of the array for the removal of neutrons from group G
DCSCTM	R*8	Name of array of the buckling correction of the total cross-section
DCHGTI	R*8	Name of array of the time absorption factor used to modify the total cross-section in an α calculation
DCSCTO	R*8	Name of array of the total cross-section
DCUR	R*8	Name of array of the currents
DSRCFX	R*8	Name of array of the fixed source
DSTAFN	R*8	Name of array of the fission neutrons in group J, summed over reactor volume
DIXXIL	R*8	Name of the array for the number of times the inner iteration maximum has been exceeded for each group for the last outer iteration
DGEOMR	R*8	Name of array of the radii modified
DELKNE	R*8	Name of array of the net flow for group J
DSTANB	R*8	Name of array of the neutron balance
DFLXST	R*8	Name of array of previous value of FLXS
DELKRI	R*8	Name of array of the total flow from the right boundary from all groups
DCSCSL	R*8	Name of array of the self-scattering cross-section

Name	Type	Definition
DFLXOL	R*8	Name of array of the flux from previous iterations
DFLXAU	R*8	Name of array of the outward fluxes
DSRCTA	R*8	Name of array of the total anisotropic source
DIU	R*8	Name of array of the fission cross-section*flux, summed over interval I and group G for region K
DDIRWM	R*8	Name of array of the direction weights*cosines

/NAMES2/

Variables used from this common block

Name	Type	Definition
DCHIM	R*8	Name of array of the χ which is used during the calculation

/SIMINT/

Variables used from this common block

Name	Type	Definition
MKRGES	I*4	Type of input guess 0 - FSR.D1 or FSA.D1 only 1 - FR.D1 or FA.D1 only 2 - Both FSR.D1 and FR.D1 or FSA.D1 and FA.D1
NCSCS	I*4	Number of cross-sections
NPTSI	I*4	Number of mesh lines
NUMREG	I*4	Number of regions
NGROUP	I*4	Number of groups
NGRPP1	I*4	Number of groups + 1
NINTI	I*4	Number of intervals
NUMDIR	I*4	Number of directions

/POINT/

Variables used from this common block

Name	Type	Definition
ICHGTI	I*4	Pointer for array of time absorption factors used to modify the total cross-section in an α calculation
ICSCFI	I*4	Pointer for array of ν*fission cross-section
ICSCTM	I*4	Pointer for array of buckling correction of the total cross-section
IELKRI	I*4	Pointer for array of total flow from the right boundary for all groups
IFLXAT	I*4	Pointer for array of total angular flux
IGEOAV	I*4	Pointer for array of midpoints of mesh intervals
IGEORM	I*4	Pointer for array of radius modifiers
IIXXNB	I*4	Pointer for array DIXXNB
ISRCGR	I*4	Pointer for array of group source
ISTAAB	I*4	Pointer for array of total reactor absorption
ISTANF	I*4	Pointer for array of neutron flux
ICSCGR	I*4	Pointer for array of group cross-section
ICSCTO	I*4	Pointer for array of total cross-section
IFLXA	I*4	Pointer for array of angular flux
IFLXAU	I*4	Pointer for array of outward flux
IFLXOL	I*4	Pointer for array of flux from the previous iteration
IGEOA	I*4	Pointer for array of the area elements
IGEOCR	I*4	Pointer for array of geometric curvature used in angular flux algorithms

Name	Type	Definition
IGEOSA	I*4	Pointer for array of the sum of geometric factors
ISRCFG	I*4	Pointer for array of fission source
ISRCIS	I*4	Pointer for array of isotropic source
ISRCST	I*4	Not used
ISTAFN	I*4	Pointer for array of fission neutrons in group J, summed over reactor volume
ISTASD	I*4	Pointer for the array DSTASD
ICSCAB	I*4	Pointer for array of absorption cross-section
ICSCIN	I*4	Pointer for input cross-section array
ICUR	I*4	Pointer for current array
IDIRWM	I*4	Pointer for array of direction weights*cosines
IFLXAI	I*4	Pointer for array of incoming angular flux
IFLXBG	I*4	Pointer for array of initial flux
IFLXS	I*4	Pointer for array of flux for present iteration
IGEOAM	I*4	Pointer for array of geometric factors used in angular flux calculation
IGEOMR	I*4	Pointer for array of radii modified
IGEOVO	I*4	Pointer for array of volume elements
IIXXII	I*4	Pointer for array DIXXII
ISRCA	I*4	Pointer for array of anisotropic source
ISRCFI	I*4	Pointer for array of fission neutrons
ISRCS	I*4	Not used
ISRCTA	I*4	Pointer for array of total anisotropic source

Name	Type	Definition
ISTANB	I*4	Pointer for array of neutron balance
ISTASS	I*4	Pointer for array of total reactor absorptions
ICSCSL	I*4	Pointer for array of self-scattering cross-section
IDIRMT	I*4	Pointer for array of direction mates
IELKNE	I*4	Pointer for array of net flow for group j
IFLXAO	I*4	Pointer for array of outgoing angular flux
IFLXEX	I*4	Pointer for array of external flux
IFLXST	I*4	Pointer for array of previous value of FLXS
IGEOAT	I*4	Pointer for array of geometric attenuation used in angular flux algorithms
IIXXIL	I*4	Pointer for array DIXXIL
ISRCFX	I*4	Pointer for array of fixed source
ISRCSC	I*4	Pointer for array of scatter source
ISRCTI	I*4	Pointer for array of total isotropic source
ISTAND	I*4	Pointer for array of scalar flux summed over reactor volume in all groups in interval I for group J, divided by group velocity
IU	I*4	Pointer for array of the fission cross-section*flux, summed over interval I and group G for region K

/EXTPT2/

Variables used from this common block

Name	Type	Definition
ICHIM	I*4	Pointer for χ

/SIMIN3/

Variables used from this common block

Name	Type	Definition
NFBLKS	I*4	Number of fission blocks
NORONE	I*4	NGROUP for matrix calculation, 1 for vector calculation

3. Local Variables

Name	Type	Definition
N3	I*4	NORONE*NINTI
LUMMY	I*4	Error return from POINTR
N2	I*4	NORONE*NGROUP*NFBLKS

4. Functions and tasks performed by this subroutine

This routine sets up storage for the list of arrays shown in the subroutine listing. This is done through calls to POINTR (PUTPNT and GETPNT). It obtains the address pointers for these array names to use in subroutine calls.

5. Subprograms called by this subroutine

ARCERR
PUTPNT (entry in POINTR)
GETPNT (entry in POINTR)
IPTERR (entry in POINTR)

6. Subprograms calling this subroutine

Main program NUC003

7. Error messages generated by this subroutine

ERROR IN MODULE NUC003 ± nnnnn

where ± nnnnn is

Message Number	Reason
-2001	POINTR could not allocate space for array DGEOA.
-2002	POINTR could not allocate space for array DSRCFG.
-2003	POINTR could not allocate space for array DSTAFN.
-2004	POINTR could not allocate space for array DFLXAI.
-2005	POINTR could not allocate space for array DSTAND.
-2006	POINTR could not allocate space for array DFLXAO.
-2007	POINTR could not allocate space for array DSRCSC.
-2008	POINTR could not allocate space for array DCSCIN.
-2009	POINTR could not allocate space for array DFLXAT.
-2010	POINTR could not allocate space for array DCSCTO.
-2011	POINTR could not allocate space for array DCHIM.

Subroutine SETARG (A)

1. Arguments

Name	Type	Dimension	Definition
A	R*8	60,000 fast core 120,000 bulk core	Container array

2. Common Blocks

/SIMINT/

Variables used from this common block

Name	Type	Definition
NCSCS	I*4	Number of cross-sections
NPTSI	I*4	Number of mesh lines
NUMREG	I*4	Number of regions
NGROUP	I*4	Number of groups
NGRPP1	I*4	Number of groups + 1
NUMCMP	I*4	Number of compositions
NINTI	I*4	Number of intervals
NUMDIR	I*4	Number of directions

/POINT/

Variables used from this common block

Name	Type	Definition
ICHGTI	I*4	Pointer for array of time absorption factors used to modify the total cross-section in an α calculation
ICSCFI	I*4	Pointer for array of ν*fission cross-section
ICSCTM	I*4	Pointer for array of buckling corrections of the total cross-section
IDIRMU	I*4	Pointer for array of direction cosines
IELKRI	I*4	Pointer for array of total flux from the right boundary for all groups
IFLXAT	I*4	Pointer for array of total angular flux
IFLXIN	I*4	Pointer for array of scalar flux

Name	Type	Definition
IGCNVE	I*4	Pointer for array of velocity
IGEOAV	I*4	Pointer for array of midpoints of mesh intervals
IGEORM	I*4	Pointer for array of radii modified
IIXXNB	I*4	Pointer for array DIXXNB
ISRCDI	I*4	Pointer for array of distributed source
ISRCGR	I*4	Pointer for array of group source
ICSCTO	I*4	Pointer for array of total cross-section
IDIRWG	I*4	Pointer for array of direction weights
IFLXA	I*4	Pointer for array of angular flux
IFLXAU	I*4	Pointer for array of outward flux
IFLXOL	I*4	Pointer for array of flux from previous iteration
IGEOA	I*4	Pointer for array of area elements
IGEOCR	I*4	Pointer for array of geometric curvature used in angular flux algorithms
IGEOSA	I*4	Pointer for array of sum of geometric factors
IINPRE	I*4	Pointer for array of region-to-mesh correspondence
IMKRSK	I*4	Pointer for array of groups to be skipped when group-skipping option is used
ISRCFG	I*4	Pointer for array of fission source
ISRCIS	I*4	Pointer for array of isotropic source
ICSCAB	I*4	Pointer for array of absorption cross-section
ICSCIN	I*4	Pointer for array of input cross-section array

Name	Type	Definition
ICUR	I*4	Pointer for array of current
IDIRWM	I*4	Pointer for array of direction weights*cosines
IFLXAI	I*4	Pointer for array of incoming angular flux
IFLXBG	I*4	Pointer for array of initial flux
IFLXS	I*4	Pointer for array of flux for present iteration
IGEOAM	I*4	Pointer for array of geometric factors used in angular flux algorithms
IGEOMR	I*4	Pointer for array of radii modified
IGEOVO	I*4	Pointer for array of volume elements
IIXXII	I*4	Pointer for array DIXXII
ISRCA	I*4	Pointer for array of anisotropic source
ISRCFI	I*4	Pointer for array of fission neutrons
ISRCS	I*4	Not used
ICSCFA	I*4	Pointer for array of density factors
ICSCSL	I*4	Pointer for array of self-scattering cross-section
IDIRMT	I*4	Pointer for array of direction mates
IELKNE	I*4	Pointer for array of net flow for group J
IFLXAO	I*4	Pointer for array of outgoing angular flux
IFLXEX	I*4	Pointer for array of external flux
IFLXST	I*4	Pointer for array of previous value of FLXS

Name	Type	Definition
IGEOAT	I*4	Pointer for array of geometric attenuation used in angular flux algorithms
IGEORD	I*4	Pointer for array of initial radii
IINPCM	I*4	Pointer for array of composition-to-mesh correspondence
IIXXIL	I*4	Pointer for array DIXXIL
ISRCAS	I*4	Not used
ISRCFX	I*4	Pointer for array of fixed source
ISRCSC	I*4	Pointer for array of scatter source
ISRCSH	I*4	Not used
ISTAAB	I*4	Pointer for array of total reactor absorption
ISTANF	I*4	Pointer for array of neutron flux
IREGNM	I*4	Pointer for array of region names
ISRCST	I*4	Not used
ISTAFN	I*4	Pointer for array of fission neutrons in group J, summed over reactor volume
ISTASD	I*4	Pointer for array DSTASD
ICMPNM	I*4	Pointer for array of composition names
ISRCTA	I*4	Pointer for array of total anisotropic source
ISTANB	I*4	Pointer for array of neutron balance
ISTASS	I*4	Pointer for array of self-scattering
ISRCTI	I*4	Pointer for array of total isotropic source

Name	Type	Definition
ISTAND	I*4	Pointer for array of scalar flux summed over reactor volume in all groups in interval I for group J, divided by group velocity
IU	I*4	Pointer for the array of the fission cross-section*flux, summed over interval I and group G for region K

/SIMIN3/

Variables used from this common block

Name	Type	Definition
NCBLKS	I*4	Number of composition blocks
NFBLKS	I*4	Number of fission blocks
NORONE	I*4	NGROUP for matrix calculation, 1 for vector calculation

/EXTPT2/

Variables used from this common block

Name	Type	Definition
ICHIM	I*4	Pointer for χ used in calculations
IINPFC	I*4	Pointer for the array of fission blocks
ICHI	I*4	Fission spectrum flag
IINPLN	I*4	Pointer for the ℓ number array
IINPBI	I*4	Pointer for array of composition blocks

3. Local Variables - None

4. Functions and tasks performed by this subroutine

This subroutine sets up the arguments for the initialization subroutines called by it.

5. Subprograms called by this subroutine

CHINM1
CSCGP1
CSCIN1
DTSIM1
FSORCE
FXDSC1
GEOFN1
GEOMS1
MODRD1
IPRNT1
MPRIN1
SHELL1
SNCHK1
FPRNT1
OUTER1
INNER1
SNCHK1

6. Subprograms calling this subroutine

SNARC1

7. Error messages generated by this subroutine - None

Subroutine SETFBK (K, INPB, M)

1. Arguments

Name	Type	Dimension	Definition
K	I*4	--	Index in the table INPFBC or INPBIC for composition M
INPB	I*4	NUMCMP	INPFBC or INPBIC
M	I*4	--	Composition number

2. Common Blocks - None

3. Local Variables - None

4. Functions and tasks performed by this subroutine

This subroutine sets the index in table INPFBC(M) or INPBIC(M) for composition M. INPFBC or INPBIC gives the chi matrix or isotopic scattering block number, respectively, for composition M.

5. Subprograms called by this subroutine - None

6. Subprograms calling this subroutine

READXS

7. Error messages generated by this subroutine - None

Subroutine SHELL1 (VSUR1, VSUR2, VSUR3, DIRWGT, GEOA, IVERT, NMDIRP, NGROUP, NPTI , NVEDGE, NANISO, CONNF)

Entry Points

Entry SHELL

1. Arguments

Name	Type	Dimension	Definition
VSUR1	R*8	NVEDGE*NGROUP	Isotropic component of surface (shell) source
VSUR2	R*8	NVEDGE*NGROUP	Anisotropic component of surface source (slab or sphere geometry)
VSUR3	R*8	NVEDGE*NGROUP	Second anisotropic component of surface source (for cylindrical geometry)
DIRWGT	R*8	NMDIRP	Direction weights
GEOA	R*8	NPTI	Area element at point I
IVERT	I*4	NPTI	Surface source position indicator

Name	Type	Dimension	Definition
NMDIRP	I*4	--	Number of directions
NGROUP	I*4	--	Number of energy groups
NPII	I*4	--	Number of points
NVEDGE	I*4	--	Number of surface sources
NANISO	I*4	--	Surface source anisotropy flag NANISO = 0, isotropic source = 1, anisotropic slab or sphere = 2, anisotropic cylinder
CONNF	R*8	--	Normalization factor

2. Common Blocks - None

3. Local Variables

Name	Type	Definition
U1	R*8	Ratio of normalization factor by total surface source
U2	R*8	Sum over the groups of isotropic component of surface source for each point
U3	R*8	Total surface source

4. Functions and tasks performed by this subroutine

If a surface source is specified, the following calculations are done in this routine.

For cylindrical geometry i.e. NANISO = 2, for all NVEDGE sources, and all groups NGROUP we compute

$$\text{VSUR2(K,N)} = \text{DSQRT}\left(\text{VSUR2(K,N)**2} + \text{VSUR3(K,N)**2}\right)$$

where

K = 1, NVEDGE; N = 1, NGROUP.

The total source is computed for all geometries by first summing over the groups i.e.

$$U2 = \sum_{N=1}^{NGROUP} VSUR1(K,N)$$

and then

$$U3 = \sum_{\substack{I \text{ such that} \\ IVERT(I) \neq 0}} GEOA(I)*U2.$$

With

$$U1 = CONNF/U3$$

we obtain

$$VSUR1(K,N) = U1*VSUR1(K,N)$$
$$VSUR2(K,N) = U1*VSUR2(K,N)$$

5. Subprograms called by this subroutine

ARCERR

6. Subprograms calling this subroutine

SHELL1 is called by SETARG
SHELL is called by ONEDDC
MODI (entry in ONEDDC)

7. Error messages generated by this subroutine

ERROR IN MODULE NUC003 ± nnnnn

where ± nnnnn is

Message Number	Reason
-15001	Sum of the shell source is less than or equal to zero for an inhomogeneous problem for which ES.DISH is present.

Subroutine SKIPXS (NI, NA, NG)

1. Arguments

Name	Type	Dimension	Definition
NI	I*4	--	Data set reference number of XS.C.MIN
NA	I*4	--	Data set reference number of XS.C.ANI
NG	I*4	--	Number of groups + 1

2. Common Blocks - None

3. Local Variables

Name	Type	Definition
L	I*4	LNO - 1
LNO	I*4	Anisotropic scattering order

4. Functions and tasks performed by this subroutine

This subroutine skips past NGRPP1 + 1 records on XS.C.MIN. It reads LNO from XS.C.ANI, and skips LNO - 1 records of XS.C.ANI.

5. Subprograms called by this subroutine

ARCERR

6. Subprograms calling this subroutine

READXS

7. Error messages generated by this subroutine

ERROR IN MODULE NUC003 ± nnnnn

where ± nnnnn is

Message Number	Reason
-6001	Unexpected end-of-file in skipping composition on blocks on XS.C.MIN for compositions not needed.
-6002	Error in skipping composition blocks on XS.C.MIN for composition not needed.
-6003	Unexpected end-of-file in skipping composition blocks on XS.C.ANI for compositions not needed.
-6004	Error in skipping composition blocks on XS.C.ANI for compositions not needed.

Subroutine SNARC1 (A)

1. Arguments

Name	Type	Dimension	Definition
A	R*8	60,000 fast core 120,000 bulk core	Container array

2. Common Blocks

/SIMFLP/

Variables used from this common block

Name	Type	Definition
FOURPI	R*8	4.*π
CONRFC	R*8	Relax FAC
FLGAN	R*8	Anisotropic scattering flag, initialized to zero
RATFIL	R*8	Lower LAMBDA
RATFIU	R*8	Upper LAMBDA
RATSLL	R*8	0.005
FLGIS	R*8	Isotropic scattering flag
TWOPI	R*8	2.*π
ONE	R*8	1.0
VOLFAC(3)	R*8	Volume fraction

/SIMINT/

Variables used from this common block

Name	Type	Definition
IERR	I*4	Flag initialized to one
NUMOI	I*4	Outer iteration counter, initialized to zero

/TIMER/

Variables used from this common block

Name	Type	Definition
TI	R*4	Previous clock time
TIME	R*4	Present clock time

3. Local Variables - None

4. Functions and tasks performed by this subroutine

This routine controls the initialization of the arguments of the several routines in the ARC System 1-D transport computation module. It also sets clock time for the module and initializes the following constants:

FLGAN
FLGIS
NUMOI
ONE
VOLFAC(1)
TWOPI
FOURPI
VOLFAC(2)
VOLFAC(3)
RATSLL
RATFIL
CONRFC
RATFIU

The routine then checks S_n constants and computes direction mates and sets up fission spectrum fractions through calls to subroutine ONEDCD. The S_n calculation is entered through the call to subroutine EXEC. The final print routine is called from this routine also.

5. Subprograms called by this subroutine

NUPAGE
SETARG
ONEDCD
EXEC
FPRINT (entry in FPRNT1)

6. Subprograms calling this subroutine

Main program NUC003

7. Error messages generated by this subroutine - None

Subroutine SNCHK1 (DIRWMU, DIRMU, DIRWGT, DIRMTS, NMDIRP)

Entry Points

Entry SNCHEK

1. Arguments

Name	Type	Dimension	Definition
DIRWMU	R*8	NMDIRP	Direction weights*cosines
DIRMU	R*8	NMDIRP	Direction cosines
DIRWGT	R*8	NMDIRP	Direction weights
DIRMTS	R*8	NMDIRP	Direction mates
NMDIRP	I*4	--	Number of directions

2. Common Blocks

/SIMFLP/

Variables used from this common block

Name	Type	Definition
FACWMU	R*8	Sum of the weights and cosines

/SIMINT/

Variables used from this common block

Name	Type	Definition
NUMOI	I*4	Counter for number of outer iterations
MKRRB	I*4	Right boundary condition marker
NUMDIR	I*4	Number of directions

3. Local Variables

Name	Type	Definition
K1	I*4	Index for direction mates
V1	R*8	Direction weights*cosines + direction weights

4. Functions and tasks performed by this subroutine

This subroutine calculates the direction weight times the direction cosine on the first outer iteration

DIRWMU(M) = DIRMU(M)*DIRWGT(M),

M = 1, 2, . . ., NUMDIR,

where DIRMU(M) are the direction cosines and DIRWGT(M) are the weights for the directions M.

M is N + 1 for slabs or spheres, and M = N(N + 4)/4 for cylinders; N is the S_n order.

The direction mate (the direction cosines opposite in sign but equal in magnitude) indices are generated.

A test is made to ensure that

$$\sum_{M=1}^{M} (\text{DIRWMU(M)} + \text{DIRWGT(M)}) = 1.0 \pm 0.0001$$

if the test is not satisfied an error is flagged and computation is terminated.

5. Subprograms called by this subroutine

ARCERR

6. Subprograms calling this subroutine

SNCHK1 is called by SETARG
SNCHEK is called by ONEDCD

7. Error messages generated by this subroutine

ERROR IN MODULE NUC003 ± nnnnn

where ± nnnnn is

Message Number	Reason
-13001	A direction weight times the corresponding cosine is equal to zero and the direction cosine is zero.
-13002	(1.0 - direction weight times cosine plus direction weight) is less than .0001.
-13003	A direction weight times cosine of a direction is less than zero for the last direction. This is not allowed.

Subroutine SNUFF (D, N, M)

1. Arguments

Name	Type	Dimension	Definition
D	R*8	--	Variable name of the array for a data set
N	I*4	--	The data set reference number to be used
M	I*4	--	Specifies whether we wish to read or write the data set

2. Common Blocks - None

3. Local Variables - None

4. Functions and tasks performed by this subroutine

This subroutine calls system routine SNIFF.

5. Subprograms called by this subroutine

SNIFF (system routine)

6. Subprograms calling this subroutine

PROCDS
READXS
SCANIS
PRANGF
MODXS

7. Error messages generated by this subroutine - None

Subroutine TABLE (INPLNO, INPBIC)

1. Arguments

Name	Type	Dimension	Definition
INPLNO	I*4	NUMCMP	The table which gives the number of composition blocks for each composition I
INPBIC	I*4	NUMCMP	Composition blocks

2. Common Blocks

/SIMINT/

Variables used from this common block

Name	Type	Definition
NUMCMP	I*4	Number of compositions

/SIMIN3/

Variables used from this common block

Name	Type	Definition
NCBLKS	I*4	Number of composition blocks

3. Local Variables

Name	Type	Definition
NMINUS	I*4	NUMCMP - 1

4. Functions and tasks performed by this subroutine

This subroutine generates the table INPLNO(I), which gives the number of composition blocks for each composition I.

5. Subprograms called by this subroutine - None

6. Subprograms calling this subroutine

READXS

7. Error messages generated by this subroutine - None

Subroutine TRANXS (CSC, NCSCSP)

1. Arguments

Name	Type	Dimension	Definition
CSC	R*8	NCSCSP*NUMCMP	Cross-sections
NCSCSP	I*4	--	Number of cross-sections

2. Common Blocks

/SIMINT/

Variables used from this common block

Name	Type	Definition
ISELF	I*4	Pointer for self-scattering cross-sections
NCSCS	I*4	Number of cross-sections
NGROUP	I*4	Number of groups
ITOTAL	I*4	Position of total source
NGRPP1	I*4	Number of groups + 1

3. Local Variables

Name	Type	Definition
K2	I*4	NGROUP
KMAX1	I*4	ISELF - ITOTAL - 1
U1	R*8	Temporary location of non-scattering cross-sections
KMAX2	I*4	NCSCS - ISELF
K1	I*4	Cross-section index
TEMP	R*8	Temporary location of scattering cross-sections

4. Functions and tasks performed by this subroutine

This subroutine performs a transformation on the scattering cross-sections within an isotropic block, for all groups of the block. The transformation has the effect of replacing the scattering cross-section matrix with its adjoint.

The nature of the operation is illustrated in the example below. Let the following values be given:

NGROUP = 3
NCSCS = 9
MAXUP = 2
MAXDN = 2
ISELF = 7

Prior to transformation let the structure of that section of an isotope block corresponding to a single energy group j be as shown in (1), below.

(1)

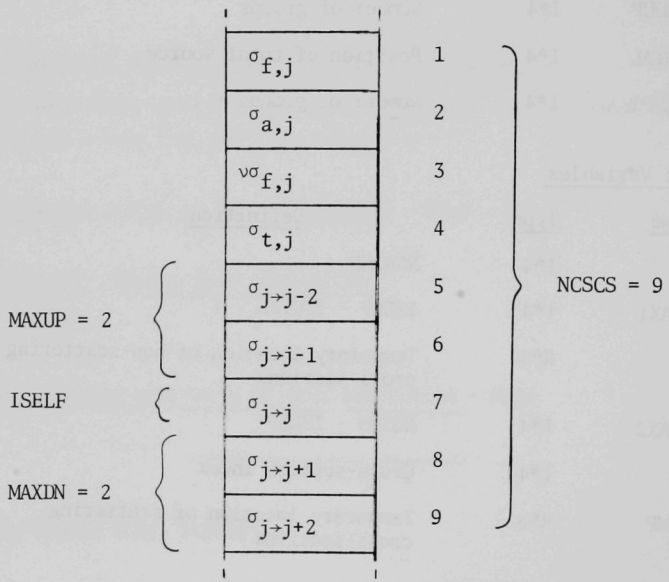

A complete isotope block, for the above values, has the structure shown in (2), below.

(2)

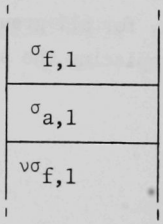

(2) (cont'd)

	$\sigma_{t,1}$
UP-SCAT	0
	0
SELF-SCAT	$\sigma_{1\to1}$
DOWN-SCAT	$\sigma_{1\to2}$
	$\sigma_{1\to3}$
	$\sigma_{f,2}$
	$\sigma_{a,2}$
	$\nu\sigma_{f,2}$
	$\sigma_{t,2}$
UP-SCAT	0
	$\sigma_{2\to1}$
SELF-SCAT	$\sigma_{2\to2}$
DOWN-SCAT	$\sigma_{2\to3}$
	0
	$\sigma_{f,3}$
	$\sigma_{a,3}$
	$\nu\sigma_{f,3}$
	$\sigma_{t,3}$

(2) (cont'd)

UP-SCAT	$\sigma_{3\to1}$
	$\sigma_{3\to2}$
SELF-SCAT	$\sigma_{3\to3}$
DOWN-SCAT	0
	0

The transformation reorders the up- and down-scattering cross-sections among the various groups so that on exiting the isotope block has the new structure shown in (3)

(3)

J = 1	$\sigma_{f,1}$	
	$\sigma_{a,1}$	
	$\nu\sigma_{f,1}$	
	$\sigma_{t,1}$	
	$\sigma_{3\to1}$	UP-SCAT
	$\sigma_{2\to1}$	
	$\sigma_{1\to1}$	SELF-SCAT
	0	DOWN-SCAT
	0	

(3) (cont'd)

J = 2	$\sigma_{f,2}$	
	$\sigma_{a,2}$	
	$\nu\sigma_{f,2}$	
	σ_t	
	0	UP-SCAT
	$\sigma_{3\to2}$	
	$\sigma_{2\to2}$	SELF-SCAT
	$\sigma_{1\to2}$	DOWN-SCAT
	0	
J = 3	$\sigma_{f,3}$	
	$\sigma_{a,3}$	
	$\nu\sigma_{f,3}$	
	$\sigma_{t,3}$	
	0	UP-SCAT
	0	
	$\sigma_{3\to3}$	SELF-SCAT
	$\sigma_{2\to3}$	DOWN-SCAT
	$\sigma_{1\to3}$	

Note that, though reordered, an up-scattering term of (2) remains an up-scattering term in (3); i.e., it still represents the transfer from one group to a second group of higher energy. The down-scattering cross-sections are similarly unchanged in nature.

5. Subprograms called by this subroutine - None

6. Subprograms calling this subroutine

   CALLXS

7. Error messages generated by this subroutine - None

5. SNARC1D (NUC003) Common Block Descriptions

This section provides more detailed information about the common blocks used by the SNARC1D subprograms. The common blocks appear in alphabetical order by name.

For each common block, all variables are listed in order of appearance in the block by name and type, and the definition of each is given. In addition, there appears for each variable a list of the subprograms in which the value of the variable is set or altered.

A special case is the /ARRAY/ common block, which contains the container array A used by the dynamic storage allocation module POINTR (see ANL-7711 of this series). Section 6 contains a list of the names of all arrays which may be defined in the container array at any point in the execution of the module.

/ARRAY/

Name	Type	Subprograms where values are set or modified	Definition
A	R*8	PROCDS	POINTR container array

/BUFFER/

Name	Type	Subprograms where values are set or modified	Definition
BUF	I*4	COMZER	Buffer for skipping unneeded data during data set reading

/DDUFFY/

Name	Type	Subprograms where values are set or modified	Definition
IMDCMP	I*4	PROCDS	Pointer for array MODCMP
ICPMOD	I*4	PROCDS	Pointer for array CMPMOD
IMC	I*4	PROCDS	Pointer for array MC

/DSRNOS/

Name	Type	Subprograms where values are set or modified	Definition
NCDINP	I*4	PROCDS	DSRN of data set SP.TINEW
NOUT	I*4	PROCDS	DSRN for output data set
NTR1D	I*4	--	Not used
NININP	I*4	PROCDS	DSRN of data set SP.CICN
NESD1D	I*4	PROCDS	DSRN of data set ES.D1D

Name	Type	Subprograms where values are set or modified	Definition
NFSD1	I*4	PROCDS	DSRN of data set FSR.D1
NFRD1	I*4	PROCDS	DSRN of data set FR.D1
NESD1S	I*4	PROCDS	DSRN of data set ES.D1SH
NBCD1	I*4	PROCDS	DSRN of data set BC
NGEOM	I*4	PROCDS	DSRN of data set GEOM
NSPCRT	I*4	PROCDS	DSRN of data set SP.CRIT
NXSISO	I*4	PROCDS	DSRN of data set XS.ISO
NSXCMN	I*4	PROCDS	DSRN of data set XS.C.MIN
NXSCAN	I*4	PROCDS	DSRN of data set XS.C.ANI

/DSRNO2/

Name	Type	Subprograms where values are set or modified	Definition
NFAD1A	I*4	PRANGF	DSRN of data set FA.D1A
NFSAD1	I*4	PRANGF	DSRN of data set FSA.D1
NJAD1	I*4	PRANGF	DSRN of data set JA.D1
NJRD1	I*4	PRANGF	DSRN of data set JR.D1
NFRD1A	I*4	PRANGF	DSRN of data set FR.D1A

/EXTPNT/

Name	Type	Subprograms where values are set or modified	Definition
IINPCR	I*4	PROCDS COMZER	Pointer for array INPCR
INMINC	I*4	--	Not used

Name	Type	Subprograms where values are set or modified	Definition
INC	I*4	--	Not used
IMAT	I*4	--	Not used
IDMOD	I*4	--	Not used
ILETH	I*4	PROCDS COMZER	Pointer for array LETH
INAMAN	I*4	PROCDS COMZER	Pointer for array NAMANS
IEN	I*4	PROCDS COMZER	Pointer for array EN
ILNOAN	I*4	PROCDS COMZER	Pointer for array LNOANS

/EXTPT2/

Name	Type	Subprograms where values are set or modified	Definition
INUP	I*4	COMZER SETADD	Pointer for array NUP
ICHI	I*4	COMZER SETADD	Pointer for array CHI
ISCAT	I*4	COMZER SETADD	Pointer for array SCAT
ISCTIS	I*4	COMZER SETADD	Pointer for array SCTISO
ICHIM	I*4	COMZER SETADD	Pointer for array CHIM
ICHT	I*4	COMZER SETADD	Pointer for array CHI

Name	Type	Subprograms where values are set or modified	Definition
IINPLN	I*4	COMZER SETADD	Pointer for array INPLNO
IINPBI	I*4	COMZER SETADD	Pointer for array INPBIC
IINPFC	I*4	COMZER SETADD	Pointer for array INPFBC

/INT/

Name	Type	Subprograms where values are set or modifed	Definition
INSET	I*4	--	--

/ISANIS/

Name	Type	Subprograms where values are set or modified	Definition
ISANIS	I*4	SCANIS READXS	Anisotropic scattering flag 0 - no anisotropic scattering 1 - anisotropic scattering
MKRFLX	I*4	PROCDS	Angular flux print out flag 0 - no print of angular fluxes 1 - print of angular fluxes

/LOCATE/

Name	Type	Subprograms where values are set or modified	Definition
LSTLOC	I*4	PROCDS	Present location in container array
MAXSIZ	I*4	PROCDS	Maximum size of container array

/MAXARY/

Name	Type	Subprograms where values are set or modified	Definition
MAXA	I*4	PROCDS	Size of container array (same as MAXSIZ)

/MODULE/

Name	Type	Subprograms where values are set or modified	Definition
MODULE	I*4	Main	Module name 'NUI005'

/NAMADJ/

Name	Type	Subprograms where values are set or modified	Definition
DFAD1A	R*8	Block data	Name of data set FA.D1A
DFAD1	R*8	Block data	Name of data set FA.D1
DFSAD1	R*8	Block data	Name of data set FSA.D1
DJAD1	R*8	Block data	Name of data set JA.D1
DJRD1	R*8	Block data	Name of data set JR.D1

/NAMES/

Name	Type	Subprograms where values are set or modified	Definition
DEN	R*8	Block data	Name of the group energy boundary array, EN
DLETH	R*8	Block data	Name of the group lethargy boundary array, LETH

Name	Type	Subprograms where values are set or modified	Definition
DLNOAN	R*8	Block data	Name of the array of ℓ numbers to be specified, LNOANS
DNAMAN	R*8	Block data	Name of the array of the composition labels for which ℓ numbers are specified, NAMANS
DININP	R*8	Block data	Name of data set SP.CICN
DTR1D	R*8	--	Not used
DESD1D	R*8	Block data	Name of data set ES.D1D
DFSD1	R*8	Block data	Name of data set FSR.D1
DFRD1	R*8	Block data	Name of data set FR.D1
DESD1S	R*8	Block data	Name of data set ES.D1SH
DBCD1	R*8	Block data	Name of data set BC
DGEOM	R*8	Block data	Name of data set GEOM
DSPCRT	R*8	Block data	Name of data set SP.CRIT
DXSISO	R*8	Block data	Name of data set XS.ISO
DXSCMN	R*8	BLock data	Name of data set XS.C.MIN
DXSCAN	R*8	Block data	Name of data set XS.C.ANI
DSTAAB	R*8	Block data	Name of array of the total reactor absorption, STAABS
DCSCAB	R*8	Block data	Name of array of absorption cross sections, CSCABS
DFLXA	R*8	Block data	Name of array of angular flux, FLXA
DSRCA	R*8	Block data	Name of array of anisotropic source, SRCA
DGEOA	R*8	Block data	Name of array of the area element, GEOA

Name	Type	Subprograms where values are set or modified	Definition
DGEOAM	R*8	Block data	Name of array of the geometric factor used in angular flux calculations, GEOAMU
DCUR	R*8	Block data	Name of array of currents, CUR
DCSC	R*8	Block data	Name of array of the cross sections, CSC
DCSCFA	R*8	Block data	Name of array of the density factors, CSCFAC
DDIRMT	R*8	Block data	Name of array for direction mates, DIRMTS
DSRCDI	R*8	Block data	Name of array of the distributed source, SRCDIS
DFLXEX	R*8	Block data	Name of array of the external flux, FLXEXT
DSRCFI	R*8	Block data	Name of array of the fission neutrons, SRCFI
DSRCFG	R*8	Block data	Name of array of the fission source, SRCFG
DSRCFX	R*8	Block data	Name of array of fixed source, SRCFXD
DGEOT	R*8	Block data	Name of array of geometric attenuation used in angular flux algorithm, GEOATN
DGEOCR	R*8	Block data	Name of array of the curvatuve used in angular flux algorithm, GEOCRV
DGEOSA	R*8	Block data	Name of array of the sum or geometric factors, GEOSAC
DSTAFN	R*8	Block data	Name of array of the fission neutron in group J, summed over reactor volume STAFN
DSRCGR	R*8	Block data	Name of array of group source, SRCGRP

Name	Type	Subprograms where values are set or modified	Definition
DCSCGR	R*8	Block data	Name of array of the group cross section, CSCGRP
DIXXII	R*8	Block data	Name of array of the number of times the inner iteration maximum has been exceeded for each group, IXXII
DIXXIL	R*8	Block data	Name of array of the number of times the inner iteration maximum has been exceeded for each group since the last outer iteration, IXXIIL
DFLXAI	R*8	Block data	Name of array of the incoming angular flux, FLXAIN
DGEORD	R*8	Block data	Name of array of initial mesh lines, GEORD
DSRCIS	R*8	Block data	Name of array of the isotropic source, SRCISO
DGEOMR	R*8	Block data	Name of array of modified mesh lines, GEORAD
DDMOD	R*8	Block data	Not used
DDIRMU	R*8	Block data	Name of array for direction cosines, DIRMU
DIXXNB	R*8	Block data	Name of array of the number of times the neutron balance has exceeded the inner loop convergence criterion, IXXNB
DELKNE	R*8	Block data	Name of array for net leakage in group J, ELKNET
DSTAND	R*8	Block data	Name of array for scalar flux summed over reactor volume, in all groups in interval I and group J divided by group velocity, STAND

Name	Type	Subprograms where values are set or modified	Definition
DSTANF	R*8	Block data	Name of array of the neutron flux, STANF
DFLXS	R*8	Block data	Name of array of the flux for the present iteration, FLXS
DSTANB	R*8	Block data	Name of array of the neutron balance, STANB
DCSCFI	R*8	Block data	Name of array of ν*fission cross section, CSCFIS
DFLXAO	R*8	Block data	Name of array of the outgoing angular flux, FLXAO
DGEOAV	R*8	BLock data	Name of array of the midpoint distances of the Ith interval, GEOAVR
DFLXST	R*8	Block data	Nameof array of the previous value of FLXS, FLXST
DINPRE	R*8	Block data	Name of array of region-to-mesh correspondence, INPREG
DINPCM	R*8	Block data	Name array of composition-to-mesh correspondence, INPCMP
DGEORM	R*8	Block data	Name of array for radius modifiers, GEORM
DELKRI	R*8	Block data	Name of array of total leakage from the right boundary for all groups, ELKRIT
DFLXIN	R*8	Block data	Name of array of total scalar flux, FLXINP
DSRCSC	R*8	Block data	Name of array of the scatter source, SRCSCT
DSTASS	R*8	Block data	Name of array of the self-scattering, STASSC
DCSCSL	R*8	Block data	Name of array of the self-scattering cross section, CSCSLF

Name	Type	Subprograms where values are set or modified	Definition
DMKRSK	R*8	Block data	Name of array of groups to be skipped, MKRSKP
DSTASD	R*8	Block data	Name of the array for the removal of neutrons from group G, STASDN
DFLXOL	R*8	Block data	Name of the array for the flux from the previous iteration, FLXOLD
DCSCIN	R*8	Block data	Name of array of the input cross section, CSCINT
DFLXBG	R*8	Block data	Name of the array of initial fluxes, FLXSTR
DCSCTM	R*8	Block data	Name of the array of the buckling correction of the total cross section, CSCTMP
DFLXAU	R*8	Block data	Name of the array of the outward pointing fluxes, FLXAOT
DSRCST	R*8	Block data	Name of the array of the total shell source, SRCST
DFLXAT	R*8	Block data	Name of the array of the total angular flux, FLXAT
DCHGTI	R*8	Block data	Name of the array of the time absorption factor used to modify total cross section in an α calculation, CHGTIM
DSRCTA	R*8	Block data	Name of array of total anisotropic source, SRCTA
DSRCTI	R*8	Block data	Name of array of total isotropic source, SRCTIS
DCSCTO	R*8	Block data	Name of array of the total cross section, CSCTOT

Name	Type	Subprograms where values are set or modified	Definition
DIU	R*8	Block data	Name of array of the fission cross section times flux, summed over interval I, group G, for region K, IU
DGCNVE	R*8	Block data	Name of array of velocities, GCNVEL
DGEOVO	R*8	Block data	Name of array of volume elements, GEOVOL
DDIRWG	R*8	Block data	Name of array of direction weights, DIRWGT
DDIRMN	R*8	Block data	Name of array of direction weights times cosines, DIRWMU
DINPCR	R*8	Block data	Name of array of composition-to-region correspondence, INPCR
DNMINC	R*8	--	Not used
DNC	R*8	--	Not used
DMAT	R*8	--	Not used

/NAMES2/

Name	Type	Subprograms where values are set or modified	Definition
DNUP	R*8	BLock data	Name of the array of number of groups which upscatter, NUP
DNDN	R*8	Block data	Name of the array of number of groups which downscatter, NDN
DCHI	R*8	Block data	Name of the array of input χ, CHI
DSCAT	R*8	Block data	Name of the array of self-scattering cross sections, SCAT
DSCTIS	R*8	Block data	Name of the array of isotropic scattering, SCTISO

Name	Type	Subprograms where values are set or modified	Definition
DCHIM	R*8	Block data	Name of the array of χ used during the calculation, CHIM
DINPLN	R*8	Block data	Name of the array of ℓ numbers, INPLNO
DINPBI	R*8	Block data	Name of the array of composition blocks, INPBIC
DINPFC	R*8	Block data	Name of the array of fission blocks, INPFBC
DCHT	R*8	Block data	Name of the array of set-wide χ, CHI

/POINT/

Name	Type	Subprograms where values are set or modified	Definition
ICHGTI	I*4	SETADD COMZER	Pointer for array CHGTIM
ICHID1	I*4	--	Not used
ICHIGD	I*4	--	Not used
ICHIGP	I*4	--	Not used
ICHIG1	I*4	--	Not used
ICSC	I*4	SETADD COMZER	Pointer for array CSC
ICSCAB	I*4	SETADD COMZER	Pointer for array CSCABS
ICSCFA	I*4	PROCDS COMZER	Pointer for array CSCFAC
ICSCFI	I*4	SETADD COMZER	Pointer for array CSCFIS
ICSCGR	I*4	SETADD COMZER	Pointer for array CSCGRP

Name	Type	Subprograms where values are set or modified	Definition
ICSCIN	I*4	SETADD COMZER	Pointer for array CSCINT
ICSCSL	I*4	SETADD COMZER	Pointer for array CSCSLF
ICSCTM	I*4	SETADD COMZER	Pointer for array CSCTMP
ICSCTO	I*4	SETADD COMZER	Pointer for array CSCTOT
ICUR	I*4	SETADD COMZER	Pointer for array CUR
IDIRMT	I*4	SETADD COMZER	Pointer for array DIRMTS
IDIRMU	I*4	PROCDS COMZER	Pointer for array DIRMU
IDIRWG	I*4	PROCDS COMZER	Pointer for array DIRWT
IDIRWM	I*4	SETADD COMZER	Pointer for array DIRWMU
IELKNE	I*4	SETADD COMZER	Pointer for array ELKNET
IELKRI	I*4	SETADD COMZER	Pointer for array ELKRIT
IFLXA	I*4	SETADD COMZER	Pointer for array FLXA
IFLXAI	I*4	SETADD COMZER	Pointer for array FLXAIN
IFLXAO	I*4	SETADD COMZER	Pointer for array FLXAO
IFLXAT	I*4	SETADD COMZER	Pointer for array FLXAX
IFLXAU	I*4	SETADD COMZER	Pointer for array FLXAOT

Name	Type	Subprograms where values are set or modified	Definition
IFLXBG	I*4	SETADD COMZER	Pointer for array FLXSTR
IFLXEX	I*4	SETADD COMZER	Pointer for array FLXEXT
IFLXIN	I*4	SETADD COMZER	Pointer for array FLXINT
IFLXOL	I*4	SETADD COMZER	Pointer for array FLXOLD
IFLXS	I*4	SETADD COMZER	Pointer for array FLXS
IFLXST	I*4	SETADD COMZER	Pointer for array FLXST
IGCNVE	I*4	PROCDS COMZER	Pointer for array GCNVEL
IGEOA	I*4	SETADD COMZER	Pointer for array GEOA
IGEOAM	I*4	SETADD COMZER	Pointer for array GEOAMU
IGEOAT	I*4	SETADD COMZER	Pointer for array GEOATN
IGEOAV	I*4	SETADD COMZER	Pointer for array GEOAVR
IGEOCR	I*4	SETADD COMZER	Pointer for array GEOCRV
IGEOMR	I*4	SETADD COMZER	Pointer for array GEORAD
IGEORD	I*4	PROCDS COMZER	Pointer for array GEORD
IGEORM	I*4	PROCDS SETADD COMZER	Pointer for array GEORM
IGEOSA	I*4	SETADD COMZER	Pointer for array GEOSAC

Name	Type	Subprograms where values are set or modified	Definition
IGEOVO	I*4	SETADD COMZER	Pointer for array GEOVOL
IINPCM	I*4	PROCDS COMZER	Pointer for array INPCMP
IINPFI	I*4	PROCDS COMZER	Pointer for array INPFIC
IINPRE	I*4	PROCDS COMZER	Pointer for array INPREG
IIXXII	I*4	SETADD COMZER	Pointer for array IXXII
IIXXIL	I*4	SETADD COMZER	Pointer for array IXXIIL
IIXXNB	I*4	SETADD COMZER	Pointer for array IXXNB
IMKRSK	I*4	PROCDS COMZER	Pointer for array MKRSKP
ISRCA	I*4	SETADD COMZER	Pointer for array SRCA
ISRCAS	I*4	PROCDS COMZER	Not used
ISRCDI	I*4	PROCDS COMZER	Pointer for array SRCDIS
ISRCFG	I*4	SETADD COMZER	Pointer for array SRC
ISRCFI	I*4	PROCDS SETADD COMZER	Pointer for array SRCFI
ISRCFX	I*4	SETADD COMZER	Pointer for array SRCFXD
ISRCGR	I*4	SETADD COMZER	Pointer for array SRCGRP

Name	Type	Subprograms where values are set or modified	Definition
ISRCIS	I*4	SETADD COMZER	Pointer for array SRCIS
ISRCS	I*4	SETADD COMZER	Not used
ISRCSC	I*4	SETADD COMZER	Pointer for array SRCSCT
ISRCSH	I*4	PROCDS COMZER	Not used
ISRCST	I*4	SETADD COMZER	Not used
ISRCTA	I*4	SETADD COMZER	Pointer for array SRCTA
ISRCTI	I*4	SETADD COMZER	Pointer for array SRCTIS
ISTAAB	I*4	SETADD COMZER	Pointer for array STAABS
ISTAFN	I*4	SETADD COMZER	Pointer for array STAFN
ISTANB	I*4	SETADD COMZER	Pointer for array STANB
ISTAND	I*4	SETADD COMZER	Pointer for array STAND
ISTANF	I*4	SETADD COMZER	Pointer for array STANF
ISTASD	I*4	SETADD COMZER	Pointer for array STASDN
ISTASS	I*4	SETADD COMZER	Pointer for array STASSC
IU	I*4	SETADD COMZER	Pointer for array U
IREGNM	I*4	PROCDS COMZER	Pointer for array REGNAM

Name	Type	Subprograms where values are set or modified	Definition
ICMPNM	I*4	PROCDS COMZER	Pointer for array CMPNAM
IBSQ	I*4	PROCDS	Pointer for array BSQ

/PRSTAR/

Name	Type	Subprograms where values are set or modified	Definition
PRSTAR	R*8	CHXSEC MODRD1	Modifier for calculating final cross section used during concentration search
LCM	I*4	CHXSEC	Number of compositions to be modified

/SIMFLP/

Name	Type	Subprograms where values are set or modified	Definition
CONNF	R*8	PROCDS COMZER	Normalization factor, from SP.T1NEW
CONRFC	R*8	SNARC1 COMZER	Relaxation factor (.5)
ELKNTT	R*8	SNARC1 COMZER	Total leakage from the left boundary
ELKRTT	R*8	SNARC1 COMZER	Total leakage from the right boundary
EPS	R*8	PROCDS COMZER	Convergence criterion for a source of k calculation
EPSFIS	R*8	FSORCE COMZER	Convergence criterion for fission source
EPSG	R*8	FSORCE COMZER	Net loop convergence criterion

Name	Type	Subprograms where values are set or modified	Definition
EPSOTR	R*8	CONVRG COMZER	Convergence criterion for a source or k calculation
FACABS	R*8	INNER1 COMZER	Sum over reactor volume of product of self-scattering cross section and absolute value of difference in scalar flux on two successive iterations for a group
FACCNV	R*8	FSORCE COMZER	Convergence criterion factor
FACDIF	R*8	INNER1 COMZER	Sum over reactor volume of the product of the removal cross section and difference in scalar flux on two successive iterations
FACSCT	R*8	INNER1 COMZER	Sum over reactor volume of the produce of the self-scattering cross section and difference in scalar flux on two successive iterations
FACWMU	R*8	SNCHK1 COMZER	Sum of weights and cosines
FLGAN	R*8	SNARC1 COMZER	Anisotropic scattering flag 0 - no anisotropic scattering 1 - anisotropic scattering
FLGIS	R*8	SNARC1 COMZER	Isotropic scattering flag 0 - consider all types of scattering 1 - consider isotropic scattering only
FLGPMD	R*8	ONEDCC COMZER	Search parameter modification flag 0 - first or second calculation of χ 1 - all subsequent calculations of χ
FOURPI	R*8	SNARC1 COMZER	4π
BSQ2	R*8		Not used
BSQ1	R*8		Not used

Name	Type	Subprograms where values are set or modified	Definition
ONE	R*8	SNARC1 COMZER	1.0
PAR	R*8	ONEDCC PROCDS CONVRG COMZER	Search control parameter
PARKA	R*8	PROCDS COMZER	The fixed inverse reactor period α (from SP.CICN)
PARMOD	R*8	PROCDS COMZER	PAR modifier
PAROD	R*8	PROCDS COMZER	Search parameter oscillation damper and is .5 - for concentration search .75 - for α search 1.0 - for dimension search
PARP	R*8	ONEDCC COMZER	Previous PAR
RATFIL	R*8	SNARC1 COMZER	.01
RATFIO	R*8	OUTER1 COMZER	Previous fission ratio
RATFIP	R*8	ONEDCC COMZER	Initial fission ratio
RATFIS	R*8	OUTER COMZER	Fission ratio
RATFIU	R*8	SNARC1 COMZER	.05
RATFPR	R*8	FSORCE COMZER	Previous fission total
RATSCT	R*8	OUTER1 COMZER	Ratio of old absorption ratio to new
RATSL	R*8	ONEDCC COMZER	Difference between the pth value and the initial value of critical parameter divided by change in fission ratio

Name	Type	Subprograms where values are set or modified	Definition
RATSLL	R*8	SNARC1 COMZER	0.005
RATSLO	R*8	ONEDCC COMZER	Previous value of RATSL
STABER	R*8	EXEC OUTER1 COMZER	Balance error
STABMX	R*8	OUTER1 EXEC COMZER	Maximum balance error
STASCT	R*8	OUTER1 COMZER	Absorption ratio
TWOPI	R*8	SNARC1 COMZER	2π
VOLFAC(3)	R*8	SNARC1 COMZER	Volume fraction 1.0 for a slab .5 for a cylinder .3333333 for a sphere

/SIMINT/

Name	Type	Subprograms where values are set or modified	Definition
IERR	I*4	SNARC1 COMZER	1
IG	I*4	FSORCE OUTER1 COMZER	Present group in iteration
IMKCON	I*4	CONVRG ONEDCC ONEDTR COMZER	Converged pass flag 0 - convergence not achieved 1 - convergence achieved, make one more outer iteration

Name	Type	Subprograms where values are set or modified	Definition
IMKCVG	I*4	CONVRG COMZER	Convergence flag on outer iteration 1 - return for final print 2 - print monitor line and continue iteration 3 - test for search convergence (IMKPAR)
IMKFIC	I*4	FSORCE ONEDDC COMZER	Flag to determine if fission ratio is to be recalculated 0 - no 1 - yes
IMKGRP	I*4	OUTER1 COMZER	Group convergence flag 0 - convergence not achieved 1 - convergence achieved
IMKKA	I*4	PROCDS COMZER	Module-dependent input flag indicating α or k calculation (from SP.CICN data) 1 - α calculation 2 - k calculation
IMKMON	I*4	MPRIN1 COMZER	Flag indicating maximum number of outer iterations has been exceeded
IMKPAR	I*4	ONEDCC COMZER	Search convergence flag 1 - return for final print 2 - print monitor line and continue 3 - test to do another search pass
IMKSCT	I*4	OUTER1 COMZER	Scattering flag indicating method of group scattering calculation 0 - isotropic scattering 1 - anisotropic scattering
INTRVL	I*4	COMZER	Interval number
IPROB	I*4	SHELL1 FXDSC1 PROCDS COMZER	Problem type from SP.CICN
ISELF	I*4	READXS COMZER	Pointer for the self-scattering cross section within array CSC
ISN	I*4	PROCDS COMZER	SN order from SP.T1NEW

Name	Type	Subprograms where values are set or modified	Definition
ITOTAL	I*4	READXS COMZER	Position of total source in source array SRCFG
ITYPE	I*4	OUTER1 FSORCE COMZER	Type of cross-section source from array CSC
IXXBER	I*4	OUTER1 EXEC COMZER	Number of times neutron balance exceeds inner loop convergence criterion
MAXII	I*4	PROCDS COMZER	Maximum number of inner iterations
MAXOI	I*4	PROCDS COMZER	Maximum number of outer iterations
MAXUPG	I*4	READXS COMZER	Number of groups which upscatter
MKRDF	I*4	PROCDS COMZER	Density factor flag 0 - no density factors 1 - density factors given
MKRDIS	I*4	PROCDS COMZER	Distributed source indicator 0 - no distributed source 1 - distributed source indicated
MKRDTH	I*4	PROCDS COMZER	Diffusion theory option indicator 0 - option not used 1 - option not used
MKRGEO	I*4	PROCDS COMZER	Geometry type number
MKRGES	I*4	FSORCE PROCDS COMZER	Input function marker for input flux
MKRLB	I*4	PROCDS COMZER	Left boundary condition type
MKRRB	I*4	PROCDS COMZER	Right boundary condition type

Name	Type	Subprograms where values are set or modified	Definition
MKRSCT	I*4	READXS CHXSEC	Scattering type marker 0 - isotropic 1 - anisotropic
MKRSHL	I*4	PROCDS COMZER	Shell source indicator
NVEDGE	I*4	PROCDS COMZER	Number of surface (shell) surfaces
MKRSKI	I*4	PROCDS COMZER	Group skipping indicator (number of groups to be skipped)
MKRTHY	I*4	PROCDS COMZER	Solution type 0 - real 1 - adjoint
NCSCS	I*4	READXS COMZER	Number of cross sections
NGROUP	I*4	PROCDS READXS COMZER	Number of groups
NGRPP1	I*4	PROCDS COMZER	Number of groups +1
NINTI	I*4	PROCDS COMZER	Number of intervals
NPTSI	I*4	PROCDS COMZER	Number of points
NUMAFP	I*4	EXEC COMZER	Loop count
NUMCMP	I*4	PROCDS COMZER	Number of compositions
NUMDIR	I*4	PROCDS COMZER	Number of directions
NUMDS	I*4	--	Not used
NUMII	I*4	INNER1 COMZER	Number of inner iterations

Name	Type	Subprograms where values are set or modified	Definition
NUMKIM	I*4	READXS COMZER	χ matrix indicator
NUMKIV	I*4	READXS COMZER	χ vector indicator
NUMLIN	I*4	NUPAGE PRANGF MPRIN1 RITXSI FPRNT1 IPRNT1 COMZER	Line counter
NUMOI	I*4	MPRIN1 ONEDTR SNARC1 COMZER	Number of outer iteration counter
NUMPAG	I*4	NUPAGE PROCDS COMZER	Page counter
NDUMMY	I*4	COMZER	Not used
NUMREG	I*4	PROCDS COMZER	Number of regions
NFIN	I*4	PROCDS COMZER	Number of finite geometry types
NIL	I*4	PROCDS COMZER	Number of finite directions (integration limits per region)

/SIMIN2/

Name	Type	Subprograms where values are set or modified	Definition
MKRANS	I*4	PROCDS COMZER	Anisotropic scattering flag indicates number of compositions for which ℓ numbers are given
NCOTR	I*4		Not used

Name	Type	Subprograms where values are set or modified	Definition
LENMD	I*4		Not used
ITERFS	I*4	FSORCE COMZER	Iteration number of this set of real or adjoint fission sources
ITERFL	I*4	PROCDS COMZER	Iteration number for this set of fluxes
KINDFS	I*4	COMZER	2 - real calculation 4 - adjoint calculation
KINDFL	I*4	PROCDS COMZER	2 - real calculation 4 - adjoint calculation

/SIMIN3/

Name	Type	Subprograms where values are set or modified	Definition
IADDRS	I*4	READT4 COMZER	Present address in array SCTISO for first scattering element for this composition and group
IFFLAG	I*4	READXS COMZER	Flag denoting length of record four of XS.C.MIN
IMKMAT	I*4	READXS COMZER	Matrix calculation flag
IMKSTM	I*4	--	Not used
IMKVEC	I*4	READXS COMZER	Vector calculation flag
LASCAT	I*4	READCP COMZER	Length of scattering list for this composition and order
LNO	I*4	READCP SCANIS COMZER	Maximum scattering order of a composition
MAXDNA	I*4	READCP COMZER	Maximum number of anisotropic downscattering groups

Name	Type	Subprograms where values are set or modified	Definition
MAXUPA	I*4	READCP COMZER	Maximum number of anisotropic upscattering groups
MKRCMP	I*4	READCP COMZER	Fission spectrum flag for a composition
MKRSET	I*4	READXS COMZER	Fission spectrum flag
N	I*4	READXS COMZER	Anisotropic scattering flag
NCBLKS	I*4	RITXS1 READXS READAN COMZER	Number of composition blocks
NFBLKS	I*4	READXS RITSXI COMZER	Number of fission blocks
NORONE	I*4	READXS	1 - χ vector Number of groups - χ matrix
NUMSCT	I*4	GETLNO READCP COMZER	Number of anisotropic scattering fluxes needed

/SIMIN4/

Name	Type	Subprograms where values are set or modified	Definition
MAXDNG	I*4	READXS COMZER	Maximum number of down-scattering groups
NFAM	I*4	READXS COMZER	Number of families of delayed neutrons

/TIMER/

Name	Type	Subprograms where values are set or modified	Definition
TI	R*4	Main MPRIN1 PROCDS SNARC1 COMZER	Previous clock time
TIME	R*4	PROCDS SNARC1 COMZER	Present clock time
TIFAC	R*4	PROCDS SNARC1 COMZER	Time factor

6. SNARC1D (NUC003) Dynamic Storage Array Allocation

This section describes all arrays which may be defined by this module in common block /ARRAY/ A, using the facilities of the dynamic storage allocation module POINTR (see ANL-7711). The arrays are listed in alphabetical order by the name given them in the POINTR name table, followed in parentheses by the name of the variable which contains the array name.

The following information is given for each array:

1. type
2. dimension, in terms of module variables
3. names of subprograms where action is taken that affects the status of the array in the container, followed in parentheses by the action that is taken in the subprogram (Here, significant POINTR calls are generally PUTPNT, which allocates space in the container for the array; REDEF, which sets aside space if the array is not present or redefines its space allocation if it is; and WIPOUT, which removes the array from the name table, thus making it inaccessible. The meaning of any other POINTR calls listed can be found in the POINTR documentation.)
4. names of subprograms in which the value of elements of the array are set or altered
5. the definition of the array contents.

If the meaning of a variable used as the dimension of an array is not known, it can be found in the subprogram in which a call to PUTPNT or REDEF is made for that array.

Array Name	Type	Dimension	Subprograms issuing significant POINTR calls	Subprograms where values are set or modified	Definition
AREA	R*8	NAREA	PRANGF(PUTPNT)	GEOMOD	Areas defined from GEOM
BSQ	R*8	3*NUMREG* NIL	PRANGF(PUTPNT)	GEOMOD	All finite geometry data (contents of record type 8 of data set GEOM)
CHGTIM (DCHGTI)	R*8	NGROUP	SETADD(PUTPNT)	OUTER (entry in OUTER1)	Time absorption factors used to modify the total cross-section in an α calculation (zero for other calculation types)
CHI(DCHI)	R*8	NGROUP* NGROUP* NFBLKS if χ is a matrix NGROUP* NFBLKS if χ is a vector	READXS(PUTPNT) READXS(REDEF) READT4(REDEF)	READT4 MODXS	Input fission spectrum χ, from XS.C.MIN
CHIM (DCHIM)	R*8	NORONE* NGROUP* NFBLKS	SETADD(PUTPNT)	CHINRM (entry in CHINM1) CHXSEC	Fission spectrum χ used during the calculation (modified during concentration search)
CHT(DCHT)	R*8	NGROUP	READXS(PUTPNT)	READBL	Set-wide fission spectrum χ used during the calculation
CMPMOD (DCPMOD)	I*4	NUMCMP	PROCDS(PUTPNT)	READCR (entry in READB2)	Numbers of composition modifiers for each composition in MODCMP

Array Name	Type	Dimension	Subprograms issuing significant POINTR calls	Subprograms where values are set or modified	Definition
CNAME	R*8	NUMCMP	PRANGF(PUTPNT)	MODXS	Composition labels from XS.C.MIN
CSC(DCSC)	R*8	NUMCMP* NGROUP* NCSCS	READXS(PUTPNT)	READT4 READAN ADJINT TRANXS CHXSEC	All cross-section data except χ, read from XS.C.MIN and XS.C.ANI, reordered for adjoint calculation, modified for concentration search
CSCABS (DCSCAB)	R*8	NINTI	SETADD(PUTPNT)	OUTER (entry in OUTER1)	Volume element times absorption cross-section during iterations
CSCFAC (DCSCFA)	R*8	MKRDF	PROCDS(PUTPNT)	READB1 (entry in READB2)	Density factors from SP.T1NEW
CSCFIS (DCSCFI)	R*8	NINTI	SETADD(PUTPNT)	CSCGP (entry in CSCGP1) OUTER (entry in OUTER1)	ν * fission cross-section during iterations Volume element times ν * fission cross-section during iterations
CSCGRP (DCSCGR)	R*8	NCSCS	SETADD(PUTPNT)	CSCGP (entry in CSCGP1)	Product of each cross-section type and volume element for given interval and group
CSCINT (DCSCIN)	R*8	NINTI	SETADD(PUTPNT)	CSCIN (entry in CSCIN1)	Cross-section of given type during iterations, with buckling correction for total cross-section
CSCSLF (DCSCSL)	R*8	NINTI	SETADD(PUTPNT)	CSCGP (entry in CSCGP1)	Self scattering cross-section for given group

Array Name	Type	Dimension	Subprograms issuing significant POINTR calls	Subprograms where values are set or modified	Definition
CSCTOT (DCSCTO)	R*8	NINTI	SETADD(PUTPNT)	OUTER (entry in OUTER1)	Volume element times total cross-section during iterations
CSCTMP (DCSCTM)	R*8	NINTI	SETADD(PUTPNT)	OUTER (entry in OUTER1) CSCIN (entry in CSCIN1)	Buckling correction to the total cross-section
CUR(DCUR)	R*8	NINTI* NGROUP	SETADD(PUTPNT)	FISION (entry in FSORCE) DTSIM (entry in DTSIM1) INNER (entry in INNER1)	Currents by intervals and group
CURENTPT	R*8	NPTSI* NGROUP	OUTER1(PUTPNT)	OUTER (entry in OUTER1)	Point and group for which we are in the iteration loop
DBSQ	R*8	NUMREG* NIL	PROCDS(PUTPNT)	READBL	Buckling by region and direction from GEOM
DCMPNAME	R*8	NUNCMP	PROCDS(PUTPNT)	READR9 (entry in READR2)	Composition names from GEOM
DIRMTS (DDIRMT)	R*4	NUMDIR	SETADD(PUTPNT)	SNCHEK (entry in SNCHK1)	Direction mates

Array Name	Type	Dimension	Subprograms issuing significant POINTR calls	Subprograms where values are set or modified	Definition
DIRMU (DDIRMU)	R*8	NUMDIR	PROCDS(PUTPNT)	READB2	Direction cosines from SP.T1NEW
DIRWGT (DIRWG)	R*8	NUMDIR	PROCDS(PUTPNT)	READB2	Direction weights from SP.T1NEW
DIRWMU (DDIRWN)	R*8	NUMDIR	SETADD(PUTPNT)	SNCHEK (entry in SNCHK1)	Direction weights times corresponding cosines
DREGNAME	R*8	NUMREG	PROCDS(PUTPNT)	READR9 (entry in READB2)	Region names from GEOM
ELKNET (DELKNE)	R*8	NGRPP1	SETADD(PUTPNT)	DTSIM (entry in DTSIM1)	Net leakage for each group, followed by total over groups
ELKRIT (DELKRI)	R*8	NGRPP1	SETADD(PUTPNT)	INNER (entry in INNER1) DTSIM (entry in DTSIM)	Total leakage from the right boundary for all groups, followed by total over groups
EN(DEN)	R*8	NGRPP1	PROCDS(PUTPNT)	READVL (entry in READB2)	Group energy boundaries from XS.ISO
FLXA (DFLXA)	R*8	NPTSI* NUMDIR	SETADD(PUTPNT)	OUTER (entry in OUTER1) INNER (entry in INNER1)	Angular flux

Array Name	Type	Dimension	Subprograms issuing significant POINTR calls	Subprograms where values are set or modified	Definition
FLXAIN (DFLXAI)	R*8	NUMDIR	SETADD(PUTPNT)	INNER (entry in INNER1) DTSIM (entry in DTSIM1)	Incoming angular flux
FLXAO (DFLXAO)	R*8	NUMDIR	SETADD(PUTPNT)	OUTER (entry in OUTER1) INNER (entry in INNER1) DTSIM (entry in DTSIM1)	Outgoing angular flux
FLXAOT (DFLXAU)	R*8	NUMDIR	SETADD(PUTPNT)	OUTER (entry in OUTER1) INNER (entry in INNER1)	Outward-pointing fluxes
FLXAX (DFLXAT)	R*8	NPTSI* NUMDIR	SETADD(PUTPNT)	OUTER (entry in OUTER1) INNER (entry in INNER1)	Total angular flux
FLXEXT (DFLXEX)	R*8	NINTI	SETADD(PUTPNT)	OUTER (entry in OUTER1)	External flux

Array Name	Type	Dimension	Subprograms issuing significant POINTR calls	Subprograms where values are set or modified	Definition
FLXINP (DFLXIN)	R*8	NINTI* NGROUP	PROCDS(PUTPTN)	READB3 ADJINT	Input scalar flux from FR.D1 or FA.D1, reordered by group for adjoint problem
FLXOLD (DFLXOL)	R*8	NINTI	SETADD(PUTPNT)	OUTER (entry in OUTER1) INNER (entry in INNER1)	Flux from previous iterations
FLXS (DFLXS)	R*8	NINTI	SETADD(PUTPNT)	OUTER (entry in OUTER1) INNER (entry in INNER1) DTSIM (entry in DTSIM1)	Scalar flux for the present iteration
FLXST (DFLXST)	R*8	NINTI	SETADD(PUTPNT)	OUTER (entry in OUTER1) FISION (entry in FSORCE)	Previous values of FLXS
FLXSTR (DFLXBG)	R*8	NUMDIR* NGROUP	SETADD(PUTPNT)	OUTER (entry in OUTER1) INNER (entry in INNER)	Initial fluxes

Array Name	Type	Dimension	Subprograms issuing significant POINTR calls	Subprograms where values are set or modified	Definition
GCNVEL (DGCNVE)	R*8	NGROUP	PROCDS(PUTPNT)	READVL (entry in READB2) ADJINT	Velocity by group from XS.ISO, reordered for adjoint problem
GEOA (DGEOA)	R*8	NPTSI	SETADD(PUTPNT)	GEOMES (entry in GEOMS1)	Area element
GEOAMU (DGEOAM)	R*8	NPTSI* NUMDIR	SETADD(PUTPNT)	GEOFCN (entry in GEOFN1)	Geometric factors used in angular flux calculations
GEOATN (DGEOAT)	R*8	NPTSI* NUMDIR	SETADD(PUTPNT)	GEOFCN (entry in GEOFN1)	Geometric attenuation used in angular flux calculation
GEOAVR (DGEOAV)	R*8	NINTI	SETADD(PUTPNT)	GEOMES (entry in GEOMS1)	Midpoint of each mesh interval
GEOCRV (DGEOCR)	R*8	NPTSI* NUMDIR	SETADD(PUTPNT)	GEOFCN (entry in GEOFN1)	Curvature used in angular flux calculation
GEORAD (DGEOMR)	R*8	NPTSI	SETADD(PUTPNT)	MODRAD (entry in MODRD1)	Radii being modified during dimension search
GEORD (DGEORD)	R*8	NPTSI	PROCDS(PUTPNT)	READB1 (entry in READB2)	Initial radii from GEOM

Array Name	Type	Dimension	Subprograms issuing significant POINTR calls	Subprograms where values are set or modified	Definition
GEORM (DGEORM)	R*8	NINTI	SETADD(PUTPNT)	READZT (entry in READB2)	Radius modifiers from SP.CRIT
GEOSAC (DGEOSA)	R*8	NPTSI* NUMDIR	SETADD(PUTPNT)	GEOFCN (entry in GEOFN1)	Sum of the geometric factors
GEOVOL (DGEOVO)	R*8	NINTI	SETADD(PUTPNT)	GEOMES (entry in GEOMS1)	Volume elements
INPBIC (DINPBI)	I*4	NUMCMP	READXS(PUTPNT)	CMPFLG	Block number of isotropic component for each composition in XS.C.MIN
INPCMP (DINPCM)	I*4	NINTI	PROCDS(PUTPNT)	READI1 (entry in READB2)	Composition-to-mesh correspondence from GEOM
INPCR (DINPCR)	I*4	NUMREG	PROCDS(PUTPNT)	READI1 (entry in READB2)	Composition-to-region correspondence from GEOM
INPFBC (DINPFC)	I*4	NUMCMP	READXS(PUTPNT)	SETFBK	Block number of χ-matrix for each fission block
INPLNO (DINPLN)	I*4	NUMCMP	READXS(PUTPNT)	TABLE	Number of composition blocks for each composition in XS.C.MIN
INPREG (DINPRE)	I*4	NINTI	PROCDS(PUTPNT)	READI1 (entry in READB2)	Region-to-mesh correspondence from GEOM

Array Name	Type	Dimension	Subprograms issuing significant POINTR calls	Subprograms where values are set or modified	Definition
IVERT	I*4	NPTSI	PROCDS(PUTPNT)	READB1 (entry in READB2) SHELL1	Surface source position indicator
IXXII (DIXXII)	I*4	NGROUP	SETADD(PUTPNT)	OUTER (entry in OUTER1)	Number of times the inner iteration maximum has been exceeded for each group
IXXIIL (DIXXIL)	I*4	NGROUP	SETADD(PUTPNT)	OUTER (entry in OUTER1) INNER (entry in INNER1)	Number of times the inner iteration maximum has been exceeded for each group for the last outer iteration
IXXNB (DIXXNB)	I*4	NGROUP	SETADD(PUTPNT)	OUTER (entry in OUTER1)	Number of times the neutron balance has exceeded the inner loop convergence criterion for each group
LETH (DLETH)	R*8	NGRPP1	PROCDS(PUTPNT)	READVL (entry in READB2)	Group lethargy boundaries from XS.ISO
LNOANS (DLNOAN)	I*4	MKRANS	PROCDS(PUTPNT)	READI2 (entry in READBL)	ℓ numbers from SP.T1NEW
MC(DMC)	I*4	NUMCMP	PROCDS(PUTPNT)	READCR (entry in READB2)	Number of the pseudo-composition for each composition from SP.CRIT
MKRCM	I*4	LCM	P RANGF(PUTPNT)	MODXS	Modified fission spectrum flag after concentration search

Array Name	Type	Dimension	Subprograms issuing significant POINTR calls	Subprograms where values are set or modified	Definition
MKRSKP (DMKRSK)	I*4	MKRDTH for diffusion theory option or MKRSKI for group skipping option	PROCDS(PUTPNT)	READI1 (entry in READB2)	Groups for which the diffusion theory option is to be used, or groups to be skipped, from SP.T1NEW
MODCMP (DMDCMP)	I*4	NUMCMP	PROCDS(PUTPNT)	READCR (entry in READB2)	Numbers of compositions to be modified
NAMANS (DNAMAN)	I*4	MKRANS	PROCDS(PUTPNT)	READI2 (entry in READBL)	The composition label for which each ℓ number is to be specified from SP.T1NEW
NDN(DNDN)	I*4	NGROUP	READXS(PUTPNT)	READCP READT4 MODXS	Number of groups which downscatter into each group
NDNM	I*4	NGROUP* LCM	PRANGF(PUTPNT)	MODXS	Modified number of groups of downscattering after concentration search
NREG	I*4	LAREA	PRANGF(PUTPNT)	GEOMOD	Contents of area definition record (type 6) of GEOM
NSETZ	I*4	LZONE	PRANGF(PUTPNT)	GEOMOD	Contents of zone definition record (type 7) of GEOM

Array Name	Type	Dimension	Subprograms issuing significant POINTR calls	Subprograms where values are set or modified	Definition
NUP(DNUP)	I*4	NGROUP	READXS(PUTPNT	READCP READT4 MODXS	Number of groups which upscatter into each group
NUMP	I*4	NGROUP* LCM	PRANGF(PUTPNT)	MODXS	Modified number of groups of up-scattering after a concentration search
SCAT (DSCAT)	R*8	NGROUP* (2*NGROUP +1)	READXS(PUTPNT)	READAN	Scattering cross-section from XS.C.ANI
SCTIS	R*8	3*NGROUP +7	PRANGF(PUTPNT)	MODXS	Modified cross-sections by group after concentration search
SCTISO (DSCTIS)	R*8	3*NGROUP +7	READXS(PUTPNT)	READT4 MODXS	Cross-section data by group given in record type 4 of data set XS.C.MIN
SRCA (DSRCA)	R*8	NINTI	SETADD(PUTPNT)	OUTER (entry in OUTER1)	Anisotropic source
SRCDIS (DSRCDI)	R*8	NINTI* NGROUP	PROCDS(PUTPNT)	READB3 ADJINT	Distributed source read from ES.D1D, reordered for adjoint problem
SRCFG (DSRCFG)	R*8	NGRPP1	SETADD(PUTPNT)	FISION (entry in FSORCE)	Fission source by groups, followed by total over groups

Array Name	Type	Dimension	Subprograms issuing significant POINTR calls	Subprograms where values are set or modified	Definition
SRCFI (DSRCFI)	R*8	NORONE* NINTI	PROCDS(PUTPNT if MKRGES=0 or 2 SETADD(PUTPNT) if MKRGES=1	READB3 INNER (entry in INNER1)	Fission source as read from FSR.D1 or FSA.D1 and as calculated during inner iterations
SRCFXD (DSRCFX)	R*8	NGRPP1	SETADD(PUTPNT)	SHELL (entry in SHELL1) FXDSRC (entry in FXDSC1)	Fixed source by groups followed by total over groups
SRCGRP (DSRCGR)	R*8	NGROUP	SETADD(PUTPNT)	FISION (entry in FSORCE)	Total group source
SRCISO (DSRCIS)	R*8	NINTI	SETADD(PUTPNT)	INNER (entry in INNER1) DTSIM (entry in DTSIM1)	Isotropic source
SRCSCT (DSRCSC)	R*8	NGRPP1	SETADD(PUTPNT)	OUTER (entry in OUTER1)	Scattering source by group, followed by total over groups
SRCTA (DSRCTA)	R*8	NINTI	SETADD(PUTPNT)	INNER (entry in INNER1)	Total anisotropic source

Array Name	Type	Dimension	Subprograms issuing significant POINTR calls	Subprograms where values are set or modified	Definition
SRCTIS (DSRCTI)	R*8	NINTI	SETADD(PUTPNT)	INNER (entry in INNER1)	Total isotropic source
STAABS (DSTAAB)	R*8	NGRPP1	SETADD(PUTPNT)	OUTER (entry in OUTER1)	Total reactor absorption by group, followed by total over groups
STAFN (DSTAFN)	R*8	NGRPP1	SETADD(PUTPNT)	OUTER (entry in OUTER1)	Fission neutrons in each group summed over the reactor volume, followed by total over groups
STANB (DSTANB)	R*8	NGRPP1	SETADD(PUTPNT)	OUTER (entry in OUTER1)	Neutron balance by group, followed by total over groups
STAND (DSTAND)	R*8	NGRPP1	SETADD(PUTPNT)	OUTER (entry in OUTER1)	Scalar flux summed over reactor volume in all groups in interval i for group j, divided by group velocity for each group, followed by total over groups
STANF (DSTANF)	R*8	NGRPP1	SETADD(PUTPNT)	OUTER (entry in OUTER1)	Neutron flux for each group followed by total over groups
STASDN (DSTASD)	R*8	NGRPP1	SETADD(PUTPNT)	OUTER (entry in OUTER1)	Removal of neutrons from each group, followed by total over groups

Array Name	Type	Dimension	Subprograms issuing significant POINTR calls	Subprograms where values are set or modified	Definition
STASSC (DSTASS)	R*8	NGRPP1	SETADD(PUTPNT)	OUTER (entry in OUTER1)	Self-scattering source by group, followed by total over groups
VSUR1	R*8	NGROUP* NVEDGE	PROCDS(PUTPNT)	READB1 (entry in READB2) SHELL1 INNER	Isotropic components of surface source
VSUR2	R*8	NGROUP* NVEDGE	PROCDS(PUTPNT)	READB1 (entry in READB2) SHELL INNER	Anisotropic component of surface source
VSUR3	R*8	NGROUP* NVEDGE	PROCDS(PUTPNT)	READB1 (entry in READB2) SHELL INNER	Additional anisotropic component of surface source (cylinder only)
ZONE	R*8	NZONE	PRANGF(PUTPNT)	GEOMOD	Zones defined from GEOM

7. SNARC1D (NUC003) Data Set Usage

This section contains descriptions of all data sets used by this module. For each data set used, the following information is given:

1. the name of the data set, if it is an ARC SYSTEM data set, or a description of its contents and function if it is a scratch data set used only within the module;
2. the record structure of the data set, if it is a scratch data set;
3. names of subprograms in which the data set is read and/or written, along with a list of the record types which are read and/or written and the name of the variable containing the data set reference number.

A complete description of the record structure and contents of each ARC SYSTEM data set can be found in ANL-7711 of this series.

Name or description of data set - BC, Boundary Condition Specifications

Record structure - ARC System data set

Read in subprograms	Record types	Reference variable
PROCDS	One of Specifications (type 1)	NBCD1

Written in subprograms - None

Name or description of data set - ES.D1D, One-dimensional Distributed External Source

Record structure - ARC System data set

Read in subprograms	Record types	Reference variable
PROCDS	One of Specifications (type 1)	NESD1D
READB3	One of One-dimensional Distributed External Source (type 2)	

Written in subprograms - None

Name or description of data set - ES.D1SH, One-dimensional Surface Source

Record structure - ARC System data set

Read in subprograms	Record types	Reference variable
PROCDS	One of Specifications (type 1)	NESD1S
READSH (entry in READB1)	One of Surface Source Mesh Organization (type 2) and one of One-dimensional Surface Source Components (type 3)	

Written in subprograms - None

Name or description of data set - FA.D1, One-dimensional Adjoint Group Fluxes

Record structure - ARC System data set

Read in subprograms	Record types	Reference variable
PROCDS	One of Specifications (type 1)	NFAD1
READB3	One of One-dimensional Adjoint Flux (type 2)	

Written in subprograms	Record types	Reference variable
PRANGF	Both	NFAD1

Name or description of data set - FA.D1A, One-dimensional Adjoint Angular Group Fluxes

Record structure - ARC System data set

Read in subprograms - None

Written in subprograms	Record types	Reference variable
PRANGF	One of specifications (type 1) and NGROUP of One-dimensional Adjoint Angular Flux (type 2)	NFAD1A

Name or description of data set - FR.D1, One-dimensional Real Group Fluxes

Record structure - ARC System data set

Read in subprograms	Record types	Reference variable
PROCDS	One of Specifications (type 1)	NFRD1
READB3	One of One-dimensional Scalar Real Flux (type 2)	

Written in subprograms	Record types	Reference variable
PRANGF	Both	NFRD1

Name or description of data set - FR.D1A, One dimensional Real Angular Group Fluxes

Record structure - ARC System data set

Read in subprograms - None

Written in subprograms	Record types	Reference variable
PRANGF	One of Specifications (type 1) and NGROUP of One-dimensional Real Angular Flux (type 2)	NFRD1A

Name or description of data set - FSA.D1, One-dimensional Adjoint Fission Source

Record structure - ARC System data set

Read in subprograms	Record types	Reference variable
PROCDS	One of Specifications (type 1)	NFSAD1
READB3	One of One-dimensional Adjoint Fission Source (type 2)	

Written in subprograms	Record types	Reference variable
PRANGF	Both	NFSAD1

Name or description of data set - FSR.D1, One-dimensional Real Fission Source

Record structure - ARC System data set

Read in subprograms	Record types	Reference variable
PROCDS	One of Specifications (type 1)	NFSD1
READB3	One of One-dimensional Real Fission Source (type 2)	

Written in subprograms	Record types	Reference variable
PRANGF	Both	NSFD1

Name or description of data set - GEOM, Geometry Data

Record structure - ARC System data set

Read in subprograms	Record types	Reference variable
PROCDS	One of Specifications (type 1)	NGEOM
READB1	One of Boundaries (type 2)	
READI1 (entry in READB1)	One of Region-Interval Correspondence (type 3)	
	One of Composition-Interval Correspondence (type 4)	
	One of Composition-Region Correspondence (type 5)	
PROCDS	Skip one of Area Definitions (type 6) and one of Zone Definitions (type 7) if present	
READBL	One of Finite Geometry Data (type 8) if present	
READR9 (entry in READB1)	One of Labels (type 9)	
PRANGF	One of Specifications (type 1)	
GEOMOD	All of types 1-9 present	

Written in subprograms - None

Name or description of data set - GEOM.P, Geometry Data resulting from dimension search

Record structure - same as that of GEOM (ARC System data set)

Read in subprograms - None

Written in subprograms	Record types	Reference variable
GEOMOD	All of types 1-9 which were present in GEOM	NGE2 (exchanged with NGEOM after writing data set)

Name or description of data set - JA.D1, One-dimensional Adjoint Net Current

Record structure - ARC System data set

Read in subprograms - None

Written in subprograms	Record types	Reference variable
PRANGF	One of Specifications and One of One-dimensional Adjoint Net Current	NJAD1

Name or description of data set - JR.D1, One-dimensional Real Net Current

Record structure - ARC System data set

Read in subprograms - None

Written in subprograms	Record types	Reference variable
PRANGF	One of specifications and one of One-dimensional Real Net Current	NJRD1

Name or description of data set - SP.CICN, Module-independent Data

Record structure - ARC System data set

Read in subprograms	Record types	Reference variable
PROCDS	One of Specifications (type 1)	NININP

Written in subprograms - None

Name or description of data set - SP.CRIT, Criticality Search Specifications

Record structure - ARC System data set

Read in subprograms	Record types	Reference variable
PROCDS	One of Specifications (type 1)	NSPCRT
READCR (entry in READB1)	One of Concentration Search Modifiers (type 2), if present	
READZT (entry in READB1)	One of Dimension Search Modifiers (type 3), if present	

Written in subprograms - None

Name or description of data set - SP.T1NEW, New One-dimensional Transport Theory Input

Record structure - ARC System data set

Read in subprograms	Record types	Reference variable
PROCDS	One of Specifications (type 1 of file 1) and end-of-file for first file	NCDINP
READB2	One of Discrete Ordinate Specifications (type 1 of file 2)	
READI2 (entry in READB1	One of Anisotropy Specifications (type 2 of file 2), if present	
READB1	One of Density Factor Specifications (type 3 of file 2), if present	

Read in subprograms	Record types	Reference variable
READI1 (entry in READB1)	One of Diffusion Theory Option Specifications (type 4 of file 2) or one of Group-skipping Option Specifications (type 5 of file 2) if either is present	

Written in subprograms - None

Name or description of data set - XS.C.ANI, Anisotropic Macroscopic Composition Cross-sections

Record structure - ARC System data set

Read in subprograms	Record types	Reference variable
SCANIS	One of Specifications (type 1 of file 1) end-of-file for file 1, and all composition blocks, each consisting of one record of Composition Description (type 2 of file 2) and (LNO-1) records of Anisotropic Scattering (type 3 of file 2)	NXSCAN
READXS	One of Specifications (type 1 of file 1), and end-of-file for file 1	
SKIPXS	One composition block, consisting of one record of Composition Description (type 2 of file 2) and (LNO-1) records of Anisotropic Scattering (type 3 of file 2) for compositions not used	
READCP	One record of Composition Description (type 2 of file 2) for composition used	
READAN	(LNO-1) records of Anisotropic Scattering (type 3 of file 2) for composition used	

Written in subprograms - None

Name or description of data set - XS.C.MIN, Macroscopic Composition Cross-sections

Record structure - ARC System data set

Read in subprograms	Record types	Reference variable
READXS	One of Specifications (type 1 of file 1) and end-of-file for file 1	NXSCMN
READBL	One of Set Chi (type 2 of file 2) if present	
SKIPXS	One composition block, consisting of one record of Composition Specifications (type 3 of file 2) and NGROUP records of Composition Macroscopic Cross-sections (type 4 of file 2) for compositions not used	
READCP	One record of Composition Specifications (type 3 of file 2) for composition used	
READT4	NGROUP records of Composition Macroscopic Cross-sections (type 4 of file 2) for composition used	
MODXS	All present	

Written in subprograms - None

Name or description of data set - XS.C.MI1, Macroscopic Composition Cross-sections resulting from concentration search

Record structure - same as that of XS.C.MIN (ARC System data set)

Read in subprograms - None

Written in subprograms	Record types	Reference variable
MODXS	All which were present in XS.C.MIN	NXSCM1 (exchanged with NXSCMN after writing data set)

Name or description of data set - XS.ISO, Microscopic Group Cross-sections

Record structure - ARC System data set

Read in subprograms	Record types	Reference variable
PROCDS	One of File Size (type 1 of file 1) One of Isotope Names (type 2 of file 1)	NXSISO
READVL (entry in READB1)	One of Group Structure (type 3 of file 1)	

Written in subprograms - None

8. SNARC1D (NUC003) Error Messages

This section lists the error messages generated by SNARC1D in numerical order, along with a statement of the cause of the error and the name of the subprogram in which each occurs.

Each error message is of the form

ERROR IN MODULE NUC003 ± nnnnn,

where ± nnnnn is the error number. A negative error number indicates that processing is terminated; a positive number indicates that processing will continue.

Message number	Reason	Subprogram where issued
-1001	Module-independent input binary data set SP.CICN is missing.	PROCDS
-1002	Unexpected end-of-file on data set SP.CICN.	PROCDS
-1003	Error in reading data set SP.CICN.	PROCDS
-1004	No module-dependent data set SP.T1NEW is present.	PROCDS
-1005	Unexpected end-of-file on data set SP.T1NEW	PROCDS
-1006	Error in reading data set SP.T1NEW.	PROCDS
-1007	No end-of-file after record 1 on data set SP.T1NEW.	PROCDS
-1008	Error in reading for end-of-file after record 1 on data set SP.T1NEW.	PROCDS
-1009	POINTR could not allocate space for array DDIRMU.	PROCDS
-1010	POINTR could not allocate space for array DDIRWG.	PROCDS
-1011	POINTR could not allocate space for array DNAMAN.	PROCDS
-1012	POINTR could not allocate space for array DCSCFA.	PROCDS
-1013	POINTR could not allocate space for array DMKRSK.	PROCDS
-1014	Container array overflow	PROCDS
-1015	Unexpected end-of-file on first record of data set ES.D1D.	PROCDS
-1016	Error in reading first record of data set ES.D1D.	PROCDS
-1017	POINTR could not allocate space for array DSRCDI.	PROCDS
-1018	Unexpected end-of-file on data set FR.D1.	PROCDS
-1019	Error in reading data set FR.D1.	PROCDS
-1020	FR.D1 does not indicate a transport theory solution.	PROCDS

Message number	Reason	Subprogram where issued
-1021	POINTR could not allocate space for array DSRCFI.	PROCDS
-1022	No real or adjoint scalar flux or fission source data is available from FR.D1, FA.D1, FSR.D1, or FSA.D1.	PROCDS
-1023	Unexpected end-of-file on real or adjoint flux data set FR.D1 or FA.D1.	PROCDS
-1024	Error in reading real or adjoint flux data set FR.D1 or FA.D1.	PROCDS
-1025	The first record of FR.D1 or FA.D1 indicates that this is not a transport theory solution.	PROCDS
-1026	POINTR could not allocate space for array DFLXIN.	PROCDS
-1027	Unexpected end-of-file on first record of data set ES.D1SH.	PROCDS
-1028	Error in reading first record of data set ES.D1SH.	PROCDS
-1029	POINTR could not allocate space for VSUR1.	PROCDS
-1030	POINTR could not allocate space for VSUR2.	PROCDS
-1031	Unexpected end-of-file on first record of data set BC.	PROCDS
-1032	Error in reading first record of data set BC.	PROCDS
-1033	Data set BC is missing.	PROCDS
-1034	Unexpected end-of-file on first record of set GEOM.	PROCDS
-1035	Error in reading first record of data set GEOM.	PROCDS
-1036	Data set GEOM is missing.	PROCDS
-1037	POINTR could not allocate space for DBSQ.	PROCDS
-1038	Container array overflow.	PROCDS
-1039	Data set SP.CRIT is missing for a dimension search.	PROCDS

Message number	Reason	Subprogram where issued
-1040	Unexpected end-of-file on first record of data set SP.CRIT for a dimension search.	PROCDS
-1041	Error in reading first record of data set SP.CRIT for a dimension search.	PROCDS
-1042	POINTR could not allocate space for DGEORM.	PROCDS
-1043	Data set SP.CRIT is missing for a composition search.	PROCDS
-1044	Unexpected end-of-file on first record of data set SP.CRIT for a composition search.	PROCDS
-1045	Error in reading first record of data set SP.CRIT for a composition search.	PROCDS
-1046	POINTR could not allocate space for DCPMOD.	PROCDS
-1050	Data set XS.ISO is not present and IPROB (from SP.CICN) is 5, indicating an alpha search.	PROCDS
-1051	Unexpected end-of-file on first or second record of data set XS.ISO.	PROCDS
-1052	Error in reading first or second record of data set XS.ISO.	PROCDS
-1053	POINTR could not allocate space for DGCNVE.	PROCDS
-1054	Container array overflow.	PROCDS
-1055	POINTR could not allocate space for DLNOAN.	PROCDS
-1056	User has specified alpha search and fixed k_{eff} on data set SP.CICN. This is not allowed.	PROCDS
-1057	FA.D1 or FSA.D1 is present for a real solution, or FA.D1 or FSA.D1 is not present for an adjoint solution.	PROCDS
-1058	FR.D1 or FSR.D1 is not present for real solution.	PROCDS
+1059	Real data from FR.D1 or FSR.D1 is to be used instead of adjoint input for adjoint calculation (nonterminating error).	PROCDS
-1060	No fission source or flux data is available from FR.D1, FSR.D1, FA.D1, or FSA.D1.	PROCDS

Message number	Reason	Subprogram where issued
-1061	SP.CRIT data does not indicate an I-direction search, and SP.CICN specified one.	PROCDS
-1062	Length of specification record on SP.CRIT for a dimension search does not agree with number of intervals defined for the problem.	PROCDS
-1063	Number of intervals defined on SP.CRIT does not agree with the number defined for the problem.	PROCDS
-1065	Data set XS.ISO is not present and IMKKA=2, indicating an alpha calculation.	PROCDS
-1998	Error in reading first record of file 2 of SP.T1NEW.	READB2
	Error in reading third record of file 1 of SP.T1NEW.	READB1 (entry in READB2)
	Error in reading fourth or fifth record of file 2 of SP.T1NEW.	READI1 (entry in READB2)
	Error in reading second record (type 3) of SP.CRIT for a dimension search.	READZT (entry in READB2)
	Error in reading third record of file 1 of XS.ISO.	READVL (entry in READB2
	Error in reading second record (type 2) of SP.CRIT for a composition search.	READCR (entry in READB2)
	Error in reading second record of ES.D1D, FSR.D1, FSA.D1, FR.D1, or FA.D1.	READB3
-1999	Unexpected end-of-file on first record of file 2 of SP.T1NEW.	READB2
	Unexpected end-of-file on third record of file 1 of SP.T1NEW.	READB1 (entry in READB2)
	Unexpected end-of-file on fourth or fifth record of file 2 of SP.T1NEW.	READI1 (entry in READB2
	Unexpected end-of-file on second record (type 3) of SP.CRIT for a dimension search.	READZT (entry in READB2

Message number	Reason	Subprogram where issued
-1999	Unexpected end-of-file on third record of file 1 of XS.ISO.	READVL (entry in READB2)
	Unexpected end-of-file on second record (type 2) of SP.CRIT for a composition search.	READCR (entry in READB2
	Unexpected end-of-file on second record of ES.D1D, FSR.D1, FSA.D1, FR.D1, or FA.D1.	READB3
-2001	POINTR could not allocate space for array DGEOA.	SETADD
-2002	POINTR could not allocate space for array DSRCFG.	SETADD
-2003	POINTR could not allocate space for array DSTAFN.	SETADD
-2004	POINTR could not allocate space for array DFLXAI.	SETADD
-2005	POINTR could not allocate space for array DSTAND.	SETADD
-2006	POINTR could not allocate space for array DFLXAO.	SETADD
-2007	POINTR could not allocate space for array DSRCSC.	SETADD
-2008	POINTR could not allocate space for array DCSCIN.	
-2009	POINTR could not allocate space for array DFLXAT.	SETADD
-2010	POINTR could not allocate space for array DCSCTO.	SETADD
-2011	POINTR could not allocate space for array DCHIM.	SETADD
-3001	Data set XS.C.MIN missing.	READXS
+3002	Anisotropic scattering is indicated in SP.T1NEW but no compositions have ℓ numbers indicated (nonterminating).	READXS
-3003	Unexpected end-of-file on first record of data set XS.C.MIN.	READXS

Message number	Reason	Subprogram where issued
-3004	Error in reading first record of data set XS.C.MIN.	READXS
-3005	Fission spectrum flag indicates fission and no fissionable compositions are present on XS.C.MIN.	READXS
-3006	Fission spectrum flag on XS.C.MIN does not equal 1 or NGROUP.	READXS
-3007	POINTR could not allocate space for DCHT for a χ-matrix.	READXS
-3008	POINTR could not allocate space for DCHT for a χ-vector.	READXS
-3009	Unexpected end-of-file on first record of data set XS.C.ANI.	READXS
-3010	Error in reading first record of data set XS.C.ANI.	READXS
-3011	Number of compositions with anisotropic scattering on XS.C.ANI is not equal to the number of compositions on XS.C.MIN.	READXS
-3012	Number of groups on XS.C.MIN is not equal to the number of groups with anisotropic scattering on XS.C.ANI.	READXS
-3013	Anisotropic compositions are present on data set XS.C.ANI and the maximum ℓ number from SP.T1NEW is less than 2.	READXS
-3014	POINTR could not allocate space for DCSC.	READXS
-3015	No anisotropic scattering indicated in SP.T1NEW but anisotropic components are indicated in XS.C.ANI.	READXS
-3016	No end-of-file for first file on data set XS.C.ANI.	READXS
-3017	No end-of-file for first file on data set XS.C.MIN.	READXS
-3018	Error in reading end-of-file on data set XS.C.MIN.	READXS
-3019	Error in reading end-of-file on data set XS.C.ANI.	READXS

Message number	Reason	Subprogram where issued
-3020	POINTR could not allocate space for DNUP.	READXS
-3021	POINTR could not allocate space for DNDN.	READXS
-3024	POINTR could not allocate space for DSCAT.	READXS
-3025	POINTR could not allocate space for DCHI.	READXS
-3027	POINTR could not allocate space for DINPLN.	READXS
-3028	POINTR could not allocate space for DINPBI.	READXS
-3029	POINTR could not allocate space for DINPFC.	READXS
-3033	Both χ-vectors and χ-matrices have been specified for the compositions in XS.C.MIN for vector calculations.	READXS
-3034	A composition in XS.C.MIN uses a fission spectrum matrix and no fission spectrum matrix is indicated.	READXS
-3035	Both χ-vectors and χ-matrices have been specified for the compositions in XS.C.MIN for a matrix calculation.	READXS
-3036	POINTR could not allocate space for DCHI (redefined).	READXS
-3037	Anisotropic scattering order plus 1 on XS.C.ANI is greater than the ℓ number on XS.C.ANI.	READXS
-3038	Unexpected end-of-file in reading records to be skipped on first file of data set XS.C.ANI.	READXS
-3039	Error in reading records to be skipped on first file of data set XS.C.ANI.	READXS
-3040	POINTR could not allocate space for DCHI (redefined).	READXS
-4001	Unexpected end-of-file on second record of file 2 on SP.T1NEW.	READBL
-4002	Error in reading second record of file 2 on SP.T1NEW.	READBL
-6001	Unexpected end-of-file in skipping composition blocks on XS.C.MIN for compositions not needed.	SKIPXS

Message number	Reason	Subprogram where issued
-6002	Error in skipping composition blocks on XS.C.MIN for composition not needed.	SKIPXS
-6003	Unexpected end-of-file in skipping composition blocks on XS.C.ANI for compositions not needed.	SKIPXS
-6004	Error in skipping composition blocks on XS.C.ANI for compositions not needed.	SKIPXS
-7001	Unexpected end-of-file on third record of file 1 of data set XS.C.MIN.	READCP
-7002	Error in reading third record of file 1 of data set XS.C.MIN.	READCP
-7003	Unexpected end-of-file on second record of file 2 of data set XS.C.ANI.	READCP
-7004	Error in reading second record of file 2 of data set XS.C.ANI.	READCP
+7005	ℓ number from XS.C.ANI is greater than 2, indicating scattering of an order higher than linear. This option is not currently available. Linear scattering will be used.	READCP
-8001	Records type 2 and 4 of file 2 of XS.C.MIN are inconsistent with respect to fission spectrum flags.	READT4
-8002	Unexpected end-of-file on a record type 4 of file 2 of data set XS.C.MIN.	READT4
-8003	Error in reading a record type 4 of file 2 of data set XS.C.MIN.	READT4
-8004	Group records type 4 of file 2 of XS.C.MIN are not in expected order.	READT4
-8005	Maximum number of upscattering groups on record 1 of XS.C.MIN is less than the number of upscattering groups specified on a record type 3 of file 2 of XS.C.MIN.	READT4
-8006	Maximum number of downscattering groups on record 1 of XS.C.MIN is less than the number of downscattering groups specified on a record type 3 of file 2 of XS.C.MIN.	READT4

Message number	Reason	Subprogram where issued
-8007	Unexpected end-of-file on record type 4 of file 2 of data set XS.C.MIN while attempting to read prompt and delayed data.	READT4
-8008	Error in reading record type 4 of file 2 of data set XS.C.MIN for prompt and delayed data.	READT4
-9001	Unexpected end-of-file on record type 3 of file 2 of data set XS.C.ANI.	READAN
-9002	Error in reading record type 3 of file 2 of data set XS.C.ANI.	READAN
-9003	Maximum number of upscattering groups on record 1 of XS.C.MIN is less than the maximum number of groups with anisotropic upscattering specified on record 1 of XS.C.ANI.	READAN
-9004	Maximum number of downscattering groups on record 1 of XS.C.MIN is less than the maximum number of groups with anisotropic downscattering specified on record 1 of XS.C.ANI.	READAN
-10001	One or more of the radii GEORAD is less than or equal to zero on initialization.	MODRAD (entry in MODRD1)
-10002	The distance between two consecutive radii, (GEORAD-GEORD) is less than or equal to zero on initialization.	MODRAD (entry in MODRD1)
-10003	The modified radius is less than zero.	MODRAD (entry in MODRD1)
-10004	The problem type in SP.CICN was specified as a buckling search. This is not allowed.	MODRAD (entry in MODRD1)
-11001	An inhomogeneous calculation has been specified in SP.CICN and no distributed source or shell source is present.	CHINRM (entry in CHINM1)
-11002	If a fixed k_{eff} was defined in SP.CICN, it is less than or equal to zero.	CHINRM (entry in CHINM1)
-12001	A direction cosine is specified as zero. This is not allowed.	GEOFCN (entry in GEOFN1)

Message number	Reason	Subprogram where issued
-12002	A direction weight is specified as negative. This is not allowed.	GEOFCN (entry in GEOFN1)
-12003	A buckling search has been specified in SP.CICN. This is not allowed.	GEOFCN (entry in GEOFN1)
-13001	A direction weight times the corresponding cosine is equal to zero and the direction cosine is zero.	SNCHEK (entry in SNCHK1)
-13002	(1.0 - direction weight times cosine plus direction weight) is less than .0001.	SNCHEK (entry in SNCHK1)
-13003	A direction weight times cosine of a direction is less than zero for the last direction. This is not allowed.	SNCHEK (entry in SNCHK1)
-14001	Sum of the distributed source is zero for an inhomogeneous problem for which ES.D1D is present.	FXDSRC (entry in FXDSC1)
-14002	Sum of the distributed source is zero for an inhomogeneous problem for which ES.D1D is present and a normalization factor is defined.	FXDSRC (entry in FXDSC1)
-15001	Sum of the shell source is less than or equal to zero for an inhomogeneous problem for which ES.D1SH is present.	SHELL (entry in SHELL1)
-17001	A buckling search has been specified in data set SP.CICN. This is not allowed.	GEOMES (entry in GEOMS1)
-22001	The sum of the previous fission total and the normalized inhomogeneous source is less than or equal to zero.	FSORCE
-22002	The sum of the normalized fission source is less than or equal to zero.	FSORCE
-25001	XS.C.ANI is not present.	SCANIS
-25010	Unexpected end-of-file on record 1 of file 1 of data set XS.C.ANI.	SCANIS
-25020	Error in reading record 1 of file 1 of data set XS.C.ANI.	SCANIS
-25030	Unexpected end-of-file on record type 2 of file 2 of data set XS.C.ANI.	SCANIS

Message number	Reason	Subprogram where issued
-25040	Error in reading record type 2 of file 2 of data set XS.C.ANI.	SCANIS
-25050	Unexpected end-of-file in reading record type 3 of file 2 of data set XS.C.ANI.	SCANIS
-25060	Error in reading record type 3 of file 2 of data set XS.C.ANI.	SCANIS
-25070	Error in reading end-of-file for first file of data set XS.C.ANI.	SCANIS
-25075	End-of-file for first file not present on data set XS.C.ANI.	SCANIS
-40001	A negative direction weight has been defined at the right boundary of the reactor.	INNER (entry in INNER1)
-40002	The sum of the volume element and the total cross section is equal to zero for an interval on the inward flow of neutron pass.	INNER (entry in INNER1)
-40003	The sum of volume element and the total cross section is equal to zero for an interval on the outward flow of neutron pass.	INNER (entry in INNER1)
-40004	The net leakage for a group is equal to zero.	INNER (entry in INNER1)
-40005	The group source for a group, -FACSCT, is equal to zero.	INNER (entry in INNER1)
-51002	Previous lambda minus present lambda equals zero.	ONEDCC
-51003	Difference between P^{th} value and the initial value of the critical search parameter, divided by the corresponding difference in lambda, equals zero.	ONEDCC
-61777	No end-of-file for file 1 of data set XS.C.MIN.	MODXS
-61778	Modified cross-section data set XS.C.MI1 is not available for a concentration search.	MODXS
-61779	Unexpected end-of-file on record type 2 of file 2 of data set XS.C.MIN.	MODXS

Message number	Reason	Subprogram where issued
-61780	No end-of-file for file 1 of data set XS.C.MIN.	MODXS
-61788	Unexpected end-of-file on record type 3 of file 2 of data set XS.C.MIN.	MODXS
-61789	Error in reading record type 3 of file 2 of data set XS.C.MIN.	MODXS
-61790	Unexpected end-of-file on record type 4 of file 2 of data set XS.C.MIN.	MODXS
-61791	Error in reading record type 4 of file 2 of data set XS.C.MIN.	MODXS

9. SNARC1D (NUC003) Timing Information

This section provides timing information for the one-dimensional transport theory computation module (SNARC1D). The length of time for a problem run is dependent upon the several factors shown in the table below. The illustration lists the following information:

1. type of calculation
2. geometry type
3. SN order
4. left and right boundary conditions
5. number of energy groups
6. maximum number of upscattering groups
7. maximum number of downscattering groups
8. type of scattering
9. number of intervals
10. fission spectrum (matrix or vector)
11. problem time.

SNARCID Timing Information

CALC.	GEOM.	N	L.B.	R.B.	GROUPS	MAX. U.S.	MAX. D.S.	SCAT	NUMBER OF INTERVALS	CHI	TIME
K	CYL	4	REFL	REFL	26		10	ANISO	37	SET VECTOR	5.09 min.
K	CYCL	8	REFL	REFL	18	3	5	ISO	21	SET VECTOR	3.44 min.
K	PLANE	4	REFL	REFL	16		5	ANISO	14	SET VECTOR	.9053 min.
K-ADJ (CHI-MATRIX)	SPHERE	4	REFL	FREE	26		10	ANISO	37	ISOTOPE MATRIX	3.46 min.
K-EFF	SLAB	8	REFL	REFL	16		5	ISO	21	SET VECTOR	.7275 min.
K (CHI-MATRIX)	SPHERE	4	REFL	FREE	26		10	ANISO	37	ISOTOPE MATRIX	3.24 min.
CONC. SEARCH	SPHERE	4	REFL	FREE	3		2	ISO	50	SET VECTOR	4.04 min.
ZONE THICKNESS	SPHERE	4	REFL	FREE	3		2	ISO	50	SET VECTOR	1.22 min.
RADIUS SEARCH	SPHERE	4	REFL	FREE	3		2	ISO	50	SET VECTOR	1.33 min.
ZONE THICKNESS	SPHERE	4	REFL	FREE	3		2	ISO	50	SET VECTOR	1.04 min.
K-REAL	SPHERE	4	REFL	WHITE	3		2	ISO	50	SET VECTOR	.966 min.

10. SNARC1D (NUC003) Sample Output

The material below is an example of output obtained from the SNARC1D module. The angular flux printout shows only the angular flux output of groups 1, 2, and 16 of the illustrated 16-group problem.

TABLE OF VELOCITIES

GROUP NUMBER	VELOCITY
1	2.850000D 01
2	1.990000D 01
3	1.470000D 01
4	1.100000D 01
5	6.700000D 00
6	2.700000D 00
7	1.140000D 00
8	4.800000D-01
9	2.060000D-01
10	1.010000D-01
11	5.660000D-02
12	3.190000D-02
13	1.790000D-02
14	1.090000D-02
15	6.060000D-03
16	2.180000D-03

DATA FOR COMPOSITION C1

GROUP NUMBER	ABSORPTION CROSS SECTION	TRANSPORT CROSS SECTION	FISSION CROSS SECTION	NU*FISSION CROSS SECTION	CHI VECTOR
1	7.63010D-03	1.07459D-01	1.41924D-02	1.41924D-02	2.04000D-01
2	6.68630D-03	1.16301D-01	1.27520D-02	1.27520D-02	3.44000D-01
3	8.34243D-03	1.25941D-01	1.23171D-02	1.23171D-02	1.68000D-01
4	8.46213D-03	1.58281D-01	1.19221D-02	1.19221D-02	1.80000D-01
5	1.18226D-02	2.04835D-01	1.40368D-02	1.40368D-02	9.00000D-02
6	1.83535D-02	2.86308D-01	2.44387D-02	2.44387D-02	1.40000D-02
7	3.35350D-02	3.87117D-01	4.10571D-02	4.10571D-02	0.0
8	7.13730D-02	4.57417D-01	7.72464D-02	7.72464D-02	0.0
9	2.33704D-01	6.77816D-01	1.82802D-01	1.82802D-01	0.0
10	5.82804D-01	9.30028D-01	3.71469D-01	3.71469D-01	0.0
11	2.83820D 00	3.91739D 00	5.37652D-01	5.37652D-01	0.0
12	8.81852D-01	1.20213D 00	4.30122D-01	4.30122D-01	0.0
13	2.41249D-01	4.07698D-01	2.93265D-01	2.93265D-01	0.0
14	4.12359D-01	5.78608D-01	6.84285D-01	6.84285D-01	0.0
15	1.05312D 00	1.21925D 00	1.80847D 00	1.80847D 00	0.0
16	2.74477D 00	2.91038D 00	5.04416D 00	5.04416D 00	0.0

ISOTROPIC SCATTERING CROSS SECTION FOR COMPOSITION C1

GROUP	FROM GROUP									
1	1	3.90715D-02								
2	2	5.49459D-02	1	9.55224D-03						
3	3	8.00304D-02	2	8.68458D-03	1	1.27003D-02				
4	4	1.36020D-01	3	1.98331D-02	2	2.60973D-02	1	2.18695D-02		
5	5	1.90282D-01	4	1.15276D-02	3	1.50160D-02	2	1.74115D-02	1	1.46876D-02
6	6	2.66305D-01	5	2.73005D-03	4	2.27120D-03	3	2.71930D-03	2	2.47530D-03
	1	1.94740D-03								
7	7	3.51287D-01	6	1.64969D-03	5	0.0	4	0.0	3	0.0
	2	0.0								
8	8	3.83501D-01	7	2.29468D-03	6	0.0	5	0.0	4	0.0
	3	0.0								
9	9	4.41228D-01	8	2.54267D-03	7	0.0	6	0.0	5	0.0
	4	0.0								
10	10	3.44048D-01	9	2.88427D-03	8	0.0	7	0.0	6	0.0
	5	0.0								
11	11	1.06857D C0	10	3.17569D-03	9	0.0	8	0.0	7	0.0
	6	0.0								
12	12	3.17349D-01	11	1.06212D-02	10	0.0	9	0.0	8	0.0
	7	0.0								
13	13	1.64802D-01	12	2.92770D-03	11	0.0	10	0.0	9	0.0
	8	0.0								
14	14	1.64323D-01	13	1.64647D-03	12	0.0	11	0.0	10	0.0
	9	0.0								
15	15	1.64835D-01	14	1.92638D-03	13	0.0	12	0.0	11	0.0
	10	0.0								
16	16	1.65611D-01	15	1.29474D-03	14	0.0	13	0.0	12	0.0
	11	0.0								

DATA FOR COMPOSITION C2

GROUP NUMBER	ABSORPTION CROSS SECTION	TRANSPORT CROSS SECTION
1	-3.05910D-02	1.27809D-01
2	-8.71200D-03	1.46025D-01
3	0.0	2.35620D-01
4	0.0	3.27690D-01
5	0.0	3.90060D-01
6	0.0	5.12820D-01
7	0.0	5.22720D-01
8	0.0	5.31630D-01
9	0.0	5.36580D-01
10	0.0	5.40540D-01
11	0.0	5.40540D-01
12	0.0	5.40540D-01
13	9.90000D-05	5.40540D-01
14	1.98000D-04	5.40540D-01
15	3.96000D-04	5.40540D-01
16	8.91000D-04	5.51331D-01

ISOTROPIC SCATTERING CROSS SECTION FOR COMPOSITION C2

GROUP	FROM GROUP									
1	1	4.27680D-02								
2	2	9.24660D-02	1	8.09820D-02						
3	3	1.16127D-01	2	5.03910D-02	1	3.46500D-02				
4	4	2.37303D-01	3	1.19493D-01	2	1.18800D-02	1	0.0		
5	5	3.27294D-01	4	9.03870D-02	3	0.0	2	0.0	1	0.0
6	6	4.47975D-01	5	6.27660D-02	4	0.0	3	0.0	2	0.0
	1	0.0								
7	7	4.55400D-01	6	6.48450D-02	5	0.0	4	0.0	3	0.0
	2	0.0								
8	8	4.61340D-01	7	6.73200D-02	6	0.0	5	0.0	4	0.0
	3	0.0								
9	9	4.66290D-01	8	7.02900D-02	7	0.0	6	0.0	5	0.0
	4	0.0								
10	10	4.40550D-01	9	7.02900D-02	8	0.0	7	0.0	6	0.0
	5	0.0								
11	11	4.30650D-01	10	9.99899D-02	9	0.0	8	0.0	7	0.0
	6	0.0								
12	12	4.40550D-01	11	1.09890D-01	10	0.0	9	0.0	8	0.0
	7	0.0								
13	13	4.30551D-01	12	9.99899D-02	11	0.0	10	0.0	9	0.0
	8	0.0								
14	14	4.08672D-01	13	1.09890D-01	12	0.0	11	0.0	10	0.0
	9	0.0								
15	15	4.53024D-01	14	1.31670D-01	13	0.0	12	0.0	11	0.0
	10	0.0								
16	16	5.50440D-01	15	8.71200D-02	14	0.0	13	0.0	12	0.0
	11	0.0								

****** NUC003 INPUT PROCESSING TOOK 0.06 MINUTES

GEOMETRY DATA

GEOMETRY TYPE INFINITE RECTANGULAR SLAB

MESH INTERVAL BOUNDARY	MESH INTERVAL NUMBER	MESH INTERVAL LENGTH	MESH INTERVAL VOLUME PER UNIT HEIGHT	REGION	COMPOSITION
0.0					
	1	0.098	0.098	REG.1	C1
0.098					
	2	0.098	0.098	REG.1	C1
0.195					
	3	0.098	0.098	REG.1	C1
0.293					
	4	0.098	0.098	REG.1	C1
0.391					
	5	0.098	0.098	REG.1	C1
0.488					
	6	0.098	0.098	REG.1	C1
0.586					
	7	0.098	0.098	REG.1	C1
0.684					
	8	0.098	0.098	REG.1	C1
0.782					
	9	0.098	0.098	REG.1	C1
0.879					
	10	0.098	0.098	REG.1	C1
0.977					
	11	0.098	0.098	REG.1	C1
1.075					
	12	0.098	0.098	REG.1	C1
1.172					
	13	0.098	0.098	REG.1	C1
1.270					
	14	0.066	0.066	REG.2	C2
1.336					
	15	0.066	0.066	REG.2	C2
1.403					
	16	0.066	0.066	REG.2	C2
1.469					
	17	0.066	0.066	REG.2	C2
1.535					
	18	0.066	0.066	REG.2	C2
1.601					
	19	0.066	0.066	REG.2	C2
1.667					
	20	0.066	0.066	REG.2	C2
1.734					
	21	0.066	0.066	REG.2	C2
1.800					

MONITOR PRINT

OUTER ITERATION COUNT	LOOP COUNT	TOTAL NEUTRON BALANCE	EPSILON	EQ	LAMBDA	FISSION CHANGE	EIGEN-VALUE	TIME IN MINUTES
0	0	0.0	0.100000D-04	0.0	0.0	0.121414D 02	0.0	0.233333E-02
1	260	0.995783D-13	0.100000D-04	0.0	0.130393D 01	0.130393D 01	0.130393D 01	0.813333E-01
2	306	0.890149D-13	0.100000D-04	0.0	0.100002D 01	0.396280D 00	0.130396D 01	0.168333E-01
3	322	0.946522D-13	0.100000D-04	0.0	0.100000D 01	0.271463D-04	0.130396D 01	0.833333E-02
4	338	0.924980D-13	0.100000D-04	0.0	0.999999D 00	0.143713D-05	0.130396D 01	0.833333E-02

ANGULAR FLUX PRINT BY GROUP
GROUP NUMBER 1

MESH POINT NUMBER	RADIUS	DIRECTION NUMBER 1	DIRECTION NUMBER 2	DIRECTION NUMBER 3	DIRECTION NUMBER 4	DIRECTION NUMBER 5	DIRECTION NUMBER 6	DIRECTION NUMBER 7
1	0.0	0.154956D 01	0.155022D 01	0.155182D 01	0.155606D 01	0.160666D 01	0.160666D 01	0.155606D 01
2	0.976923D-01	0.154435D 01	0.154475D 01	0.154522D 01	0.154711D 01	0.158513D 01	0.162719D 01	0.156484D 01
3	0.195385D 00	0.153907D 01	0.153921D 01	0.153852D 01	0.153799D 01	0.156251D 01	0.164677D 01	0.157347D 01
4	0.293077D 00	0.153373D 01	0.153359D 01	0.153171D 01	0.152869D 01	0.153872D 01	0.166548D 01	0.158197D 01
5	0.390769D 00	0.152832D 01	0.152790D 01	0.152480D 01	0.151918D 01	0.151368D 01	0.168339D 01	0.159035D 01
6	0.488462D 00	0.152282D 01	0.152211D 01	0.151775D 01	0.150946D 01	0.148729D 01	0.170057D 01	0.159861D 01
7	0.586154D 00	0.151724D 01	0.151623D 01	0.151058D 01	0.149950D 01	0.145945D 01	0.171708D 01	0.160678D 01
8	0.683846D 00	0.151156D 01	0.151025D 01	0.150326D 01	0.148930D 01	0.143006D 01	0.173299D 01	0.161487D 01
9	0.781538D 00	0.150577D 01	0.150414D 01	0.149577D 01	0.147882D 01	0.139900D 01	0.174836D 01	0.162290D 01
10	0.879231D 00	0.149985D 01	0.149791D 01	0.148812D 01	0.146805D 01	0.136612D 01	0.176328D 01	0.163088D 01
11	0.976923D 00	0.149381D 01	0.149153D 01	0.148026D 01	0.145695D 01	0.133129D 01	0.177782D 01	0.163884D 01
12	0.107462D 01	0.148761D 01	0.148498D 01	0.147219D 01	0.144550D 01	0.129433D 01	0.179207D 01	0.164681D 01
13	0.117231D 01	0.148124D 01	0.147825D 01	0.146387D 01	0.143364D 01	0.125503D 01	0.180614D 01	0.165483D 01
14	0.127000D 01	0.147465D 01	0.147130D 01	0.145526D 01	0.142132D 01	0.121313D 01	0.182018D 01	0.166294D 01
15	0.133625D 01	0.148284D 01	0.147988D 01	0.146547D 01	0.143476D 01	0.124088D 01	0.177038D 01	0.164618D 01
16	0.140250D 01	0.149111D 01	0.148855D 01	0.147580D 01	0.144842D 01	0.126979D 01	0.172241D 01	0.162964D 01
17	0.146875D 01	0.149946D 01	0.149731D 01	0.148627D 01	0.146230D 01	0.129991D 01	0.167622D 01	0.161332D 01
18	0.153500D 01	0.150790D 01	0.150616D 01	0.149686D 01	0.147641D 01	0.133126D 01	0.163174D 01	0.159722D 01
19	0.160125D 01	0.151641D 01	0.151509D 01	0.150757D 01	0.149073D 01	0.136388D 01	0.158891D 01	0.158135D 01
20	0.166750D 01	0.152500D 01	0.152412D 01	0.151841D 01	0.150528D 01	0.139783D 01	0.154769D 01	0.156569D 01
21	0.173375D 01	0.153367D 01	0.153323D 01	0.152937D 01	0.152005D 01	0.143314D 01	0.150802D 01	0.155026D 01
22	0.180000D 01	0.154242D 01	0.154242D 01	0.154045D 01	0.153504D 01	0.146986D 01	0.146986D 01	0.153504D 01

ANGULAR FLUX PRINT BY GROUP
GROUP NUMBER 1

MESH POINT NUMBER	RADIUS	DIRECTION NUMBER 8	DIRECTION NUMBER 9
1	0.0	0.155182D 01	0.155022D 01
2	0.976923D-01	0.155834D 01	0.155564D 01
3	0.195385D 00	0.156478D 01	0.156100D 01
4	0.293077D 00	0.157114D 01	0.156631D 01
5	0.390769D 00	0.157745D 01	0.157158D 01
6	0.488462D 00	0.158370D 01	0.157683D 01
7	0.586154D 00	0.158991D 01	0.158204D 01
8	0.683846D 00	0.159608D 01	0.158724D 01
9	0.781538D 00	0.160223D 01	0.159243D 01
10	0.879231D 00	0.160838D 01	0.159763D 01
11	0.976923D 00	0.161453D 01	0.160284D 01
12	0.107462D 01	0.162072D 01	0.160809D 01
13	0.117231D 01	0.162696D 01	0.161340D 01
14	0.127000D 01	0.163329D 01	0.161880D 01
15	0.133625D 01	0.162129D 01	0.160899D 01
16	0.140250D 01	0.160940D 01	0.159925D 01
17	0.146875D 01	0.159762D 01	0.158958D 01
18	0.153500D 01	0.158595D 01	0.158000D 01
19	0.160125D 01	0.157440D 01	0.157048D 01
20	0.166750D 01	0.156296D 01	0.156105D 01
21	0.173375D 01	0.155164D 01	0.155169D 01
22	0.180000D 01	0.154044D 01	0.154242D 01

ANGULAR FLUX PRINT BY GROUP
GROUP NUMBER 2

MESH POINT NUMBER	RADIUS	DIRECTION NUMBER 1	DIRECTION NUMBER 2	DIRECTION NUMBER 3	DIRECTION NUMBER 4	DIRECTION NUMBER 5	DIRECTION NUMBER 6	DIRECTION NUMBER 7
1	0.0	0.402628D 01	0.402678D 01	0.402800D 01	0.403125D 01	0.406939D 01	0.406939D 01	0.403125D 01
2	0.976923D-01	0.402278D 01	0.402311D 01	0.402357D 01	0.402527D 01	0.405534D 01	0.408273D 01	0.403712D 01
3	0.195385D 00	0.401923D 01	0.401939D 01	0.401907D 01	0.401915D 01	0.404049D 01	0.409544D 01	0.404288D 01
4	0.293077D 00	0.401563D 01	0.401559D 01	0.401448D 01	0.401287D 01	0.402474D 01	0.410759D 01	0.404858D 01
5	0.390769D 00	0.401194D 01	0.401172D 01	0.400977D 01	0.400641D 01	0.400801D 01	0.411927D 01	0.405421D 01
6	0.488462D 00	0.400818D 01	0.400776D 01	0.400495D 01	0.399975D 01	0.399018D 01	0.413056D 01	0.405981D 01
7	0.586154D 00	0.400431D 01	0.400369D 01	0.399998D 01	0.399286D 01	0.397112D 01	0.414152D 01	0.406540D 01
8	0.683846D 00	0.400033D 01	0.399949D 01	0.399485D 01	0.398571D 01	0.395072D 01	0.415224D 01	0.407100D 01
9	0.781538D 00	0.399621D 01	0.399515D 01	0.398953D 01	0.397826D 01	0.392882D 01	0.416280D 01	0.407664D 01
10	0.879231D 00	0.399195D 01	0.399065D 01	0.398400D 01	0.397048D 01	0.390525D 01	0.417331D 01	0.408235D 01
11	0.976923D 00	0.398750D 01	0.398596D 01	0.397822D 01	0.396232D 01	0.387981D 01	0.418385D 01	0.408818D 01
12	0.107462D 01	0.398284D 01	0.398105D 01	0.397216D 01	0.395372D 01	0.385227D 01	0.419456D 01	0.409415D 01
13	0.117231D 01	0.397794D 01	0.397587D 01	0.396577D 01	0.394461D 01	0.382236D 01	0.420558D 01	0.410034D 01
14	0.127000D 01	0.397274D 01	0.397037D 01	0.395896D 01	0.393490D 01	0.378969D 01	0.421715D 01	0.410684D 01
15	0.133625D 01	0.397841D 01	0.397632D 01	0.396602D 01	0.394412D 01	0.380787D 01	0.418123D 01	0.409490D 01
16	0.140250D 01	0.398420D 01	0.398238D 01	0.397322D 01	0.395360D 01	0.382710D 01	0.414663D 01	0.408308D 01
17	0.146875D 01	0.399008D 01	0.398854D 01	0.398057D 01	0.396331D 01	0.384742D 01	0.411334D 01	0.407139D 01
18	0.153500D 01	0.399606D 01	0.399481D 01	0.398806D 01	0.397324D 01	0.386882D 01	0.408133D 01	0.405982D 01
19	0.160125D 01	0.400212D 01	0.400118D 01	0.399568D 01	0.398340D 01	0.389133D 01	0.405058D 01	0.404839D 01
20	0.166750D 01	0.400826D 01	0.400763D 01	0.400342D 01	0.399376D 01	0.391496D 01	0.402106D 01	0.403712D 01
21	0.173375D 01	0.401448D 01	0.401416D 01	0.401127D 01	0.400432D 01	0.393974D 01	0.399277D 01	0.402601D 01
22	0.180000D 01	0.402077D 01	0.402077D 01	0.401923D 01	0.401508D 01	0.396566D 01	0.396566D 01	0.401508D 01

ANGULAR FLUX PRINT BY GROUP
GROUP NUMBER 2

MESH POINT NUMBER	RADIUS	DIRECTION NUMBER 8	DIRECTION NUMBER 9
1	0.0	0.402800D 01	0.402678D 01
2	0.976923D-01	0.403236D 01	0.403041D 01
3	0.195385D 00	0.403667D 01	0.403400D 01
4	0.293077D 00	0.404095D 01	0.403758D 01
5	0.390769D 00	0.404521D 01	0.404114D 01
6	0.488462D 00	0.404946D 01	0.404471D 01
7	0.586154D 00	0.405372D 01	0.404829D 01
8	0.683846D 00	0.405800D 01	0.405191D 01
9	0.781538D 00	0.406234D 01	0.405557D 01
10	0.879231D 00	0.406675D 01	0.405930D 01
11	0.976923D 00	0.407125D 01	0.406313D 01
12	0.107462D 01	0.407589D 01	0.406706D 01
13	0.117231D 01	0.408071D 01	0.407116D 01
14	0.127000D 01	0.408577D 01	0.407546D 01
15	0.133625D 01	0.407725D 01	0.406851D 01
16	0.140250D 01	0.406877D 01	0.406158D 01
17	0.146875D 01	0.406034D 01	0.405467D 01
18	0.153500D 01	0.405197D 01	0.404780D 01
19	0.160125D 01	0.404367D 01	0.404096D 01
20	0.166750D 01	0.403544D 01	0.403418D 01
21	0.173375D 01	0.402729D 01	0.402744D 01
22	0.180000D 01	0.401923D 01	0.402077D 01

ANGULAR FLUX PRINT BY GROUP
GROUP NUMBER 16

MESH POINT NUMBER	RADIUS	DIRECTION NUMBER 1	DIRECTION NUMBER 2	DIRECTION NUMBER 3	DIRECTION NUMBER 4	DIRECTION NUMBER 5	DIRECTION NUMBER 6	DIRECTION NUMBER 7
1	0.0	0.215677D-07	0.182366D-07	0.945706D-08	0.250488D-08	0.565322D-09	0.565322D-09	0.250488D-08
2	0.976923D-01	0.285335D-07	0.244520D-07	0.133852D-07	0.378153D-08	0.619536D-09	0.553880D-09	0.173272D-08
3	0.195385D 00	0.377945D-07	0.328373D-07	0.190279D-07	0.586554D-08	0.723628D-09	0.583711D-09	0.128183D-08
4	0.293077D 00	0.500962D-07	0.441390D-07	0.271210D-07	0.925426D-08	0.891645D-09	0.658639D-09	0.104349D-08
5	0.390769D 00	0.664272D-07	0.593617D-07	0.387198D-07	0.147625D-07	0.114751D-08	0.788468D-09	0.956440D-09
6	0.488462D 00	0.880974D-07	0.798563D-07	0.553367D-07	0.237247D-07	0.153156D-08	0.990686D-09	0.991349D-09
7	0.586154D 00	0.116841D-06	0.107438D-06	0.791371D-07	0.383265D-07	0.211810D-08	0.129362D-08	0.114282D-08
8	0.683846D 00	0.154949D-06	0.144541D-06	0.113220D-06	0.621500D-07	0.307630D-08	0.174187D-08	0.142692D-08
9	0.781538D 00	0.205449D-06	0.194429D-06	0.162017D-06	0.101066D-06	0.491829D-08	0.240592D-08	0.188398D-08
10	0.879231D 00	0.272327D-06	0.261469D-06	0.231858D-06	0.164699D-06	0.959200D-08	0.340169D-08	0.258897D-08
11	0.976923D 00	0.360813D-06	0.351478D-06	0.331760D-06	0.268805D-06	0.254404D-07	0.494078D-08	0.368100D-08
12	0.107462D 01	0.477688D-06	0.472124D-06	0.474476D-06	0.439076D-06	0.899501D-07	0.749931D-08	0.546030D-08
13	0.117231D 01	0.631428D-06	0.633183D-06	0.677646D-06	0.716899D-06	0.374498D-06	0.124958D-07	0.876861D-08
14	0.127000D 01	0.831205D-06	0.845630D-06	0.963881D-06	0.116654D-05	0.166728D-05	0.252581D-07	0.166336D-07
15	0.133625D 01	0.806631D-06	0.820335D-06	0.938796D-06	0.114529D-05	0.169936D-05	0.251757D-06	0.107091D-06
16	0.140250D 01	0.776170D-06	0.788817D-06	0.906166D-06	0.111393D-05	0.171287D-05	0.463918D-06	0.200199D-06
17	0.146875D 01	0.740280D-06	0.751545D-06	0.866498D-06	0.107298D-05	0.170777D-05	0.661142D-06	0.294676D-06
18	0.153500D 01	0.699453D-06	0.709023D-06	0.820343D-06	0.102302D-05	0.168404D-05	0.842857D-06	0.389297D-06
19	0.160125D 01	0.654212D-06	0.661789D-06	0.768297D-06	0.964717D-06	0.164177D-05	0.100852D-05	0.482888D-06
20	0.166750D 01	0.605109D-06	0.610414D-06	0.710994D-06	0.898780D-06	0.158109D-05	0.115765D-05	0.574329D-06
21	0.173375D 01	0.552725D-06	0.555497D-06	0.649111D-06	0.825982D-06	0.150218D-05	0.128977D-05	0.662559D-06
22	0.180000D 01	0.497668D-06	0.497668D-06	0.583360D-06	0.747155D-06	0.140529D-05	0.140450D-05	0.746574D-06

ANGULAR FLUX PRINT BY GROUP
GROUP NUMBER 16

MESH POINT NUMBER	RADIUS	DIRECTION NUMBER 8	DIRECTION NUMBER 9
1	0.0	0.945706D-08	0.182366D-07
2	0.976923D-01	0.673117D-08	0.136375D-07
3	0.195385D 00	0.485209D-08	0.102450D-07
4	0.293077D 00	0.357475D-08	0.775729D-08
5	0.390769D 00	0.273260D-08	0.595411D-08
6	0.488462D 00	0.221601D-08	0.467746D-08
7	0.586154D 00	0.195850D-08	0.381858D-08
8	0.683846D 00	0.192890D-08	0.330972D-08
9	0.781538D 00	0.212927D-08	0.312088D-08
10	0.879231D 00	0.260024D-08	0.326317D-08
11	0.976923D 00	0.344261D-08	0.380649D-08
12	0.107462D 01	0.489370D-08	0.494478D-08
13	0.117231D 01	0.762953D-08	0.725597D-08
14	0.127000D 01	0.140699D-07	0.128251D-07
15	0.133625D 01	0.811102D-07	0.685440D-07
16	0.140250D 01	0.151173D-06	0.127200D-06
17	0.146875D 01	0.223296D-06	0.187995D-06
18	0.153500D 01	0.296539D-06	0.250148D-06
19	0.160125D 01	0.369989D-06	0.312891D-06
20	0.166750D 01	0.442763D-06	0.375476D-06
21	0.173375D 01	0.514008D-06	0.437175D-06
22	0.180000D 01	0.582905D-06	0.497283D-06

****** FLUXES HAVE BEEN WRITTEN ON DATA SET REFERENCE NUMBER 43

FISSION RATE SUMMARY

INTER-VAL NUMBER	FISSION RATE
1	0.986843D-01
2	0.987319D-01
3	0.988282D-01
4	0.989751D-01
5	0.991755D-01
6	0.994338D-01
7	0.997559D-01
8	0.100150D 00
9	0.100626D 00
10	0.101200D 00
11	0.101889D 00
12	0.102725D 00
13	0.103782D 00

SUM FOR REGION 1 = 0.130396D 01

14	0.0
15	0.0
16	0.0
17	0.0
18	0.0
19	0.0
20	0.0
21	0.0

SUM FOR REGION 2 = 0.0

TOTAL FISSION RATE = 0.130396D 01

FISSION NEUTRON DENSITY

INTER-VAL NUMBER	AVERAGE RADII	FISSION NEUTRONS
1	0.488462D-01	0.101015D 01
2	0.146538D 00	0.101064D 01
3	0.244231D 00	0.101163D 01
4	0.341923D 00	0.101313D 01
5	0.439615D 00	0.101518D 01
6	0.537308D 00	0.101783D 01
7	0.635000D 00	0.102112D 01
8	0.732692D 00	0.102516D 01
9	0.830385D 00	0.103003D 01
10	0.928077D 00	0.103590D 01
11	0.102577D 01	0.104296D 01
12	0.112346D 01	0.105152D 01
13	0.122115D 01	0.106234D 01
14	0.130313D 01	0.0
15	0.136938D 01	0.0
16	0.143563D 01	0.0
17	0.150188D 01	0.0
18	0.156812D 01	0.0
19	0.163437D 01	0.0
20	0.170062D 01	0.0
21	0.176688D 01	0.0

FINAL FLUX PRINT BY GROUP

INTER-VAL NUMBER	AVERAGE RADII	GROUP NUMBER 1	GROUP NUMBER 2	GROUP NUMBER 3	GROUP NUMBER 4	GROUP NUMBER 5	GROUP NUMBER 6	GROUP NUMBER 7
1	0.488462D-01	0.157549D 01	0.404588D 01	0.310171D 01	0.875249D 01	0.156116D 02	0.104017D 02	0.454938D 01
2	0.146538D 00	0.157500D 01	0.404553D 01	0.310124D 01	0.875057D 01	0.156102D 02	0.104038D 02	0.455264D 01
3	0.244231D 00	0.157402D 01	0.404484D 01	0.310030D 01	0.874674D 01	0.156076D 02	0.104082D 02	0.455918D 01
4	0.341923D 00	0.157254D 01	0.404379D 01	0.309888D 01	0.874098D 01	0.156036D 02	0.104147D 02	0.456908D 01
5	0.439615D 00	0.157057D 01	0.404238D 01	0.309698D 01	0.873328D 01	0.155983D 02	0.104235D 02	0.458243D 01
6	0.537308D 00	0.156809D 01	0.404061D 01	0.309459D 01	0.872361D 01	0.155916D 02	0.104345D 02	0.459935D 01
7	0.635000D 00	0.156510D 01	0.403846D 01	0.309172D 01	0.871196D 01	0.155836D 02	0.104480D 02	0.462003D 01
8	0.732692D 00	0.156158D 01	0.403592D 01	0.308833D 01	0.869829D 01	0.155741D 02	0.104638D 02	0.464467D 01
9	0.830385D 00	0.155753D 01	0.403297D 01	0.308444D 01	0.868256D 01	0.155632D 02	0.104822D 02	0.467352D 01
10	0.928077D 00	0.155293D 01	0.402960D 01	0.308001D 01	0.866474D 01	0.155508D 02	0.105033D 02	0.470689D 01
11	0.102577D 01	0.154776D 01	0.402578D 01	0.307504D 01	0.864477D 01	0.155369D 02	0.105271D 02	0.474514D 01
12	0.112346D 01	0.154200D 01	0.402148D 01	0.306950D 01	0.862260D 01	0.155214D 02	0.105539D 02	0.478870D 01
13	0.122115D 01	0.153563D 01	0.401667D 01	0.306338D 01	0.859817D 01	0.155043D 02	0.105838D 02	0.483805D 01
14	0.130313D 01	0.152965D 01	0.401201D 01	0.305618D 01	0.856786D 01	0.154840D 02	0.106181D 02	0.488785D 01
15	0.136938D 01	0.152472D 01	0.400803D 01	0.304876D 01	0.853534D 01	0.154630D 02	0.106525D 02	0.493151D 01
16	0.143563D 01	0.152050D 01	0.400463D 01	0.304244D 01	0.850774D 01	0.154451D 02	0.106813D 02	0.496823D 01
17	0.150188D 01	0.151700D 01	0.400179D 01	0.303720D 01	0.848494D 01	0.154303D 02	0.107049D 02	0.499835D 01
18	0.156812D 01	0.151420D 01	0.399953D 01	0.303302D 01	0.846683D 01	0.154185D 02	0.107234D 02	0.502213D 01
19	0.163437D 01	0.151210D 01	0.399783D 01	0.302989D 01	0.845331D 01	0.154098D 02	0.107371D 02	0.503979D 01
20	0.170062D 01	0.151071D 01	0.399670D 01	0.302782D 01	0.844434D 01	0.154039D 02	0.107462D 02	0.505147D 01
21	0.176688D 01	0.151001D 01	0.399613D 01	0.302678D 01	0.843987D 01	0.154010D 02	0.107507D 02	0.505729D 01

FINAL FLUX PRINT BY GROUP

INTER-VAL NUMBER	AVERAGE RADII	GROUP NUMBER 8	GROUP NUMBER 9	GROUP NUMBER 10	GROUP NUMBER 11	GROUP NUMBER 12	GROUP NUMBER 13	GROUP NUMBER 14
1	0.488462D-01	0.133173D 01	0.150695D 00	0.811153D-02	0.197660D-04	0.101327D-03	0.966746D-04	0.116610D-04
2	0.146538D 00	0.133383D 01	0.151537D 00	0.822428D-02	0.218765D-04	0.103794D-03	0.971795D-04	0.117699D-04
3	0.244231D 00	0.133804D 01	0.153243D 00	0.845440D-02	0.265169D-04	0.108845D-03	0.981979D-04	0.119911D-04
4	0.341923D 00	0.134443D 01	0.155858D 00	0.881167D-02	0.346257D-04	0.116733D-03	0.997476D-04	0.123319D-04
5	0.439615D 00	0.135309D 01	0.159453D 00	0.931215D-02	0.478889D-04	0.127882D-03	0.101856D-03	0.128032D-04
6	0.537308D 00	0.136413D 01	0.164128D 00	0.998010D-02	0.691613D-04	0.142964D-03	0.104559D-03	0.134210D-04
7	0.635000D 00	0.137770D 01	0.170019D 00	0.108509D-01	0.103210D-03	0.163014D-03	0.107907D-03	0.142067D-04
8	0.732692D 00	0.139401D 01	0.177310D 00	0.119757D-01	0.158014D-03	0.189630D-03	0.111958D-03	0.151882D-04
9	0.830385D 00	0.141328D 01	0.186239D 00	0.134277D-01	0.247073D-03	0.225304D-03	0.116788D-03	0.164020D-04
10	0.928077D 00	0.143582D 01	0.197115D 00	0.153122D-01	0.393917D-03	0.273969D-03	0.122484D-03	0.178947D-04
11	0.102577D 01	0.146196D 01	0.210341D 00	0.177811D-01	0.644582D-03	0.341897D-03	0.129154D-03	0.197260D-04
12	0.112346D 01	0.149213D 01	0.226437D 00	0.210538D-01	0.113683D-02	0.439175D-03	0.136923D-03	0.219720D-04
13	0.122115D 01	0.152683D 01	0.246074D 00	0.254487D-01	0.271807D-02	0.581899D-03	0.145938D-03	0.247295D-04
14	0.130313D 01	0.155990D 01	0.262812D 00	0.290463D-01	0.414503D-02	0.696427D-03	0.155174D-03	0.272451D-04
15	0.136938D 01	0.158678D 01	0.273827D 00	0.310441D-01	0.448005D-02	0.751476D-03	0.163420D-03	0.291029D-04
16	0.143563D 01	0.160945D 01	0.283146D 00	0.327496D-01	0.476894D-02	0.799157D-03	0.170552D-03	0.306946D-04
17	0.150188D 01	0.162808D 01	0.290828D 00	0.341660D-01	0.501088D-02	0.839244D-03	0.176541D-03	0.320209D-04
18	0.156812D 01	0.164282D 01	0.296918D 00	0.352960D-01	0.520522D-02	0.871545D-03	0.181364D-03	0.330821D-04
19	0.163437D 01	0.165378D 01	0.301455D 00	0.361416D-01	0.535144D-02	0.895907D-03	0.184999D-03	0.338781D-04
20	0.170062D 01	0.166103D 01	0.304464D 00	0.367045D-01	0.544913D-02	0.912213D-03	0.187431D-03	0.344091D-04
21	0.176688D 01	0.166465D 01	0.305964D 00	0.369857D-01	0.549804D-02	0.920386D-03	0.188650D-03	0.346749D-04

FINAL FLUX PRINT BY GROUP

INTER-VAL NUMBER	AVERAGE RADII	GROUP NUMBER 15	GROUP NUMBER 16
1	0.488462D-01	0.609028D-06	0.492574D-08
2	0.146538D 00	0.625241D-06	0.551867D-08
3	0.244231D 00	0.658500D-06	0.679041D-08
4	0.341923D 00	0.710609D-06	0.892756D-08
5	0.439615D 00	0.784645D-06	0.122500D-07
6	0.537308D 00	0.885519D-06	0.172689D-07
7	0.635000D 00	0.102096D-05	0.247850D-07
8	0.732692D 00	0.120316D-05	0.360648D-07
9	0.830385D 00	0.145166D-05	0.532078D-07
10	0.928077D 00	0.179813D-05	0.801369D-07
11	0.102577D 01	0.229471D-05	0.126055D-06
12	0.112346D 01	0.302815D-05	0.219624D-06
13	0.122115D 01	0.414413D-05	0.471593D-06
14	0.130313D 01	0.505345D-05	0.693911D-06
15	0.136938D 01	0.548928D-05	0.758789D-06
16	0.143563D 01	0.586490D-05	0.815017D-06
17	0.150188D 01	0.617939D-05	0.862313D-06
18	0.156812D 01	0.643198D-05	0.900442D-06
19	0.163437D 01	0.662203D-05	0.929214D-06
20	0.170062D 01	0.674908D-05	0.948484D-06
21	0.176688D 01	0.681281D-05	0.958161D-06

FINAL MONITOR PRINT

OUTER ITERATION COUNT	LOOP COUNT	TOTAL NEUTRON BALANCE	EPSILON	EQ	LAMBDA	FISSION CHANGE	EIGEN-VALUE	TIME IN MINUTES
5	354	0.909954D-13	0.100000D-04	0.0	0.999999D 00	0.324567D-07	0.130396D 01	0.823333E-01

A=THE NUMBER OF TIMES THE IIM HAS BEEN EXCEEDED FOR EACH GROUP.
B=THE NUMBER OF TIMES THE IIM HAS BEEN EXCEEDED FOR EACH GROUP FOR THE LAST OUTER ITERATION.
C=THE NUMBER OF TIMES THE NEUTRON BALANCE HAS EXCEEDED THE INNER LOOP CONVERGENCE CRITERION FOR EACH GROUP.

GROUP NUMBER	A	B	C
1	0	0	0
2	0	0	0
3	0	0	0
4	0	0	0
5	0	0	0
6	0	0	0
7	0	0	0
8	0	0	0
9	0	0	0
10	0	0	0
11	0	0	0
12	0	0	0
13	0	0	0
14	0	0	0
15	0	0	0
16	0	0	0

TOTAL PROBLEM TIME = 0.199833E 00 MINUTE(S)

ACKNOWLEDGMENT

The authors wish to thank D. E. Neal for her editorial assistance throughout the preparation of this document.

REFERENCES

1. G. J. Duffy et al., *SNARG-1D, A One-dimensional, Discrete-ordinate, Transport-theory Program for the CDC-3600*, ANL-7221 (June 1966).

2. B. G. Carlson and K. D. Lathrop, *Computing Methods in Reactor Physics*, Chapter 3, *"Transport Theory--The Method of Discrete Ordinates,"* Gordon and Breach, New York, New York, 1968.

X

ARGONNE NATIONAL LAB WEST
3 4444 00011423 1

B