ANL-7840

PROCEDURAL CHANGES IN THE QUALITY EVALUATION OF CP-5 REACTOR FUEL

R. W. Brandenburg, R. C. Gehrke,
and V. Dentamaro

U of C-AUA-USAEC

ARGONNE NATIONAL LABORATORY, ARGONNE, ILLINOIS

The facilities of Argonne National Laboratory are owned by the United States Government. Under the terms of a contract (W-31-109-Eng-38) between the U. S. Atomic Energy Commission, Argonne Universities Association and The University of Chicago, the University employs the staff and operates the Laboratory in accordance with policies and programs formulated, approved and reviewed by the Association.

MEMBERS OF ARGONNE UNIVERSITIES ASSOCIATION

The University of Arizona
Carnegie-Mellon University
Case Western Reserve University
The University of Chicago
University of Cincinnati
Illinois Institute of Technology
University of Illinois
Indiana University
Iowa State University
The University of Iowa
Kansas State University
The University of Kansas
Loyola University
Marquette University
Michigan State University
The University of Michigan
University of Minnesota
University of Missouri
Northwestern University
University of Notre Dame
The Ohio State University
Ohio University
The Pennsylvania State University
Purdue University
Saint Louis University
Southern Illinois University
The University of Texas at Austin
Washington University
Wayne State University
The University of Wisconsin

NOTICE

This report was prepared as an account of work sponsored by the United States Government. Neither the United States nor the United States Atomic Energy Commission, nor any of their employees, nor any of their contractors, subcontractors, or their employees, makes any warranty, express or implied, or assumes any legal liability or responsibility for the accuracy, completeness or usefulness of any information, apparatus, product or process disclosed, or represents that its use would not infringe privately-owned rights.

Printed in the United States of America
Available from
National Technical Information Service
U.S. Department of Commerce
5285 Port Royal Road
Springfield, Virginia 22151
Price: Printed Copy $3.00; Microfiche $0.95

ANL-7840
Safeguards and Nuclear
Materials Management

ARGONNE NATIONAL LABORATORY
9700 South Cass Avenue
Argonne, Illinois 60439

PROCEDURAL CHANGES IN THE QUALITY EVALUATION OF CP-5 REACTOR FUEL

by

R. W. Brandenburg, R. C. Gehrke,
and V. Dentamaro*

Special Materials and Services Division

September 1971

*Now at Hospital of the University of Nebraska, Omaha

TABLE OF CONTENTS

	Page
ABSTRACT	4
INTRODUCTION	4
DESCRIPTION AND OPERATION	5
RESULTS	6
Improved Counting Precision	6
Simplified Fuel Handling	7
Greater Efficiency	7
CONCLUSION	8
REFERENCES	8

LIST OF FIGURES

No.	Title	Page
1.	Diagram of Scanning System	5
2.	Standard Tube Arrangement with Various Enriched Foils	5
3.	Comparison of Setup of Past and Present Methods	7
4.	V-Support	8

TABLE

No.	Title	Page
I.	Sample of Assay Results, Including Calibration Line	6

PROCEDURAL CHANGES IN THE QUALITY EVALUATION OF CP-5 REACTOR FUEL

by

R. W. Brandenburg, R. C. Gehrke,
and V. Dentamaro

ABSTRACT

The gamma assay of the CP-5 reactor fuel is a part of a quality verification program that includes radiographic as well as ultrasonic testing. This report concerns the modification of the gamma-ray scintillation spectrometric technique and how this modification improved the precision of the results, simplified the fuel handling, and increased the efficiency. Under this new method, scanning time was reduced approximately 50% while the relative precision was increased approximately 7%.

INTRODUCTION

This report describes the modification of the gamma-ray scintillation spectrometric technique used in the nondestructive assay of the CP-5 fuel elements. The general principles of this nondestructive technique remain the same as those stated by Beyer[1] and Kuncl,[2] i.e., determining for accountability purposes the ^{235}U loading by measuring the intensity of the 185-keV gamma rays. The modification of the technique has been in the physical setup and control of the equipment and the means and methods of analyzing the data. These changes have improved the procedure in the following ways:

1. The counting precision has been improved to increase the accuracy of the results.

2. The handling of the fuel has been simplified to minimize possible fuel-element damage during handling.

3. The overall counting and recording time has been reduced to bring about greater efficiency.

PROCEDURAL CHANGES IN THE QUALITY EVALUATION OF CP-5 REACTOR FUEL

by

R. W. Brandenburg, R. C. Gehrke,
and V. Deutsmaro

ABSTRACT

The gamma assay of the CP-5 reactor fuel is a part of a quality verification program that includes radiographic as well as ultrasonic testing. This report concerns the modification of the gamma-ray scintillation spectrometric technique and how this modification improved the precision of the results, simplified the fuel handling, and increased the efficiency. Under this new method, scanning time was reduced approximately 50% while the relative precision was increased approximately 7%.

INTRODUCTION

This report describes the modification of the gamma-ray scintillation spectrometric technique used in the nondestructive assay of the CP-5 fuel elements. The general principles of this nondestructive technique remain the same as those stated by Beyer and Kunzl,[3] i.e., determining for accountability purposes the ^{235}U loading by measuring the intensity of the 185-KeV gamma rays. The modification of the technique has been in the physical setup and control of the equipment and the means and methods of analyzing the data. These changes have improved the procedure in the following ways:

1. The counting precision has been improved to increase the accuracy of the results.

2. The handling of the fuel has been simplified to minimize possible fuel-element damage during handling.

3. The overall counting and recording time has been reduced to bring about greater efficiency.

DESCRIPTION AND OPERATION

A machinist's lathe was modified to function as a unidirectional scanning device.[3] The lathe was equipped with an electrically controlled pneumatic gear-shifting mechanism that controlled the carriage for X scanning. Mounted on the carriage were a scanner control unit that controlled all scanning functions, and a long metal rod, which supported the lead-shielded NaI detector. The fuel tube or standard tube to be assayed was placed on V supports and centered to allow the detector probe to be passed through the center of the stationary fuel tube. The carriage was positioned so that the NaI detector, in beginning its scan, was lined up with the end of the fuel elements. A diagram of the system is shown in Fig. 1.

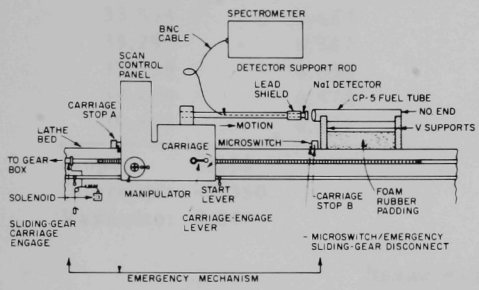

Fig. 1. Diagram of Scanning System

The carriage automatically performed two runs--forward and return. When the detector passed through the tube, the forward motion of the carriage tripped the B microswitch, which stopped the count until the carriage began its reverse movement. Counting continued until the reverse motion of the carriage tripped the A microswitch.

Uranium foils of a known weight and enrichment were placed on the standard tube, as shown in Fig. 2. These foils, standard tubes, and combinations thereof were counted and used to determine a linear relationship between counts and known enrichments. From the standards and the CP-5 tubes was obtained the count information, which was manually transferred to paper tape via a teletype. This information was input into a PDP-8 Digital Equipment Corporation Computer, and a line was generated from the standard data. The final output included the standard data, the fuel-element identification number, the measured fuel content, confidence in the measurement, vendor's fuel content, and the difference between vendor and measurement values. An example of the output is shown in Table I. As an indication of the accuracy of our measurements of the ^{235}U content, the difference between the vendor's chemical analysis and ANL gamma assay was less than 1%.

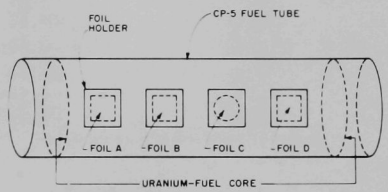

Fig. 2. Standard Tube Arrangement with Various Enriched Foils

The precision of the weights determined, based on counting statistic for two standard deviations, was less than 1% for the three tube sizes.

DESCRIPTION AND OPERATION

A machinist's lathe was modified to function as a unidirectional scanning device.[3] The lathe was equipped with an electrically controlled pneumatic gear-shifting mechanism that controlled the carriage for X scanning. Mounted on the carriage were a scanner control unit that controlled all scanning functions, and a long metal rod, which supported the lead-shielded NaI detector. The fuel tube or standard tube to be assayed was placed on V supports and centered to allow the detector probe to be passed through the center of the stationary fuel tube. The carriage was positioned so that the NaI detector, in beginning its scan, was lined up with the end of the fuel elements. A diagram of the system is shown in Fig. 1.

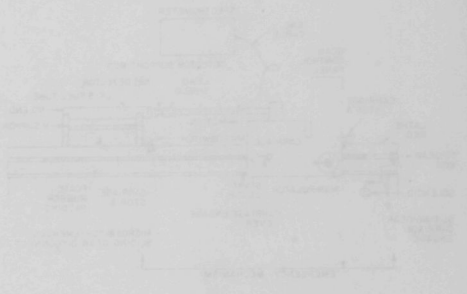

Fig. 1. Diagram of Scanning System

The carriage automatically performed two runs--forward and return. When the detector passed through the tube, the forward motion of the carriage tripped the B microswitch, which stopped the count until the carriage began its reverse movement. Counting continued until the reverse motion of the carriage tripped the A microswitch.

Uranium foils of a known weight and enrichment were placed on the standard tube, as shown in Fig. 2. These foils, standard tubes, and combinations thereof were counted and used to determine a linear relationship between counts and known enrichments. From the standards and the CP-5 tubes was obtained the count information, which was manually transferred to paper tape via a teletype. This information was input into a PDP-8 Digital Equipment Corporation Computer, and a line was generated from the standard data. The final output included the standard data, the fuel-element identification number, the measured fuel content, confidence in the measurement, vendor's fuel content, and the difference between vendor and measurement values. An example of the output is shown in Table I. As an indication of the accuracy of our measurements of the ^{235}U content, the difference between the vendor's chemical analysis and ANL gamma assay was less than 1%.

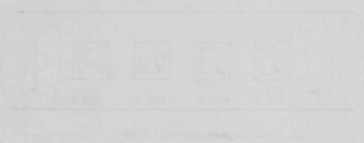

Fig. 2. Standard Tube Arrangement with Various Enriched Foils

The precision of the weights determined, based on counting statistics for two standard deviations, was less than 1% for the three tube sizes.

TABLE I. Sample of Assay Results, Including Calibration Line

Least-squares Calibration Line

^{235}U Weight Determined from Line, g	Confidence, g + or -	^{235}U Standard Weight Determined from Chemistry, g	Residual, g
33.534	0.683	33.700	-0.166
35.299	0.567	35.180	0.119
37.259	0.534	37.090	0.169
38.404	0.570	38.320	0.084
39.594	0.644	39.800	-0.206

Slope: 0.366
Intercept: -2.350
Variance: 0.040

Assay Results

Tube Number	Weight of ^{235}U, g, as Determined by: Gamma Assay	Vendor Chemistry	Difference, g
3E12	34.86 ± 0.60	34.08	0.78
3D14	35.01 ± 0.59	35.67	-0.66
3D32	35.43 ± 0.57	35.86	-0.43
3D13	35.36 ± 0.58	35.80	-0.44
3D33	35.52 ± 0.57	35.99	-0.47
3D44	35.19 ± 0.58	35.61	-0.42
3E52	35.27 ± 0.58	34.48	0.79
Total	246.64 ± 4.01	247.49	-0.85

RESULTS

Improved Counting Precision

In the past, the fuel tube or standard was rotated by means of a machinist's lathe beneath a scanning detector. The fuel tubes had to be fit to a lead-filled aluminum insert. This shield-tube insert was placed inside the fuel tube to ensure that only the tube surface nearest the detector was counted. Under this method, for a given period of time, the NaI detector scanned only a small section on the circumference of the fuel tube. In

TABLE 1. Sample of Assay Results, Including Calibration Line

Least-squares Calibration Line

^{235}U Weight Determined from Line, g	Confidence, g + or -	^{235}U Standard Weight Determined from Chemistry, g	Residual, g
33.534	0.683	33.700	-0.166
35.299	0.567	35.180	0.119
37.259	0.534	37.090	0.169
38.404	0.570	38.320	0.084
39.594	0.644	39.800	-0.206

Slope: 0.366
Intercept: -2.350
Variance: 0.040

Assay Results

Tube Number	Weight of ^{235}U, g, as Determined by Gamma Assay	Vendor Chemistry	Difference, g
3E12	34.86 ± 0.60	34.08	0.78
3D14	35.01 ± 0.59	35.67	-0.66
3D32	35.43 ± 0.57	35.86	-0.43
3D13	35.36 ± 0.58	35.80	-0.44
3D33	35.52 ± 0.57	35.99	-0.47
3D44	35.19 ± 0.58	35.61	-0.42
3E52	35.27 ± 0.58	34.48	0.79
Total	246.64 ± 4.01	247.49	-0.85

RESULTS

Improved Counting Precision

In the past, the fuel tube or standard was rotated by means of a machinist's lathe beneath a scanning detector. The fuel tubes had to be fit to a lead-filled aluminum insert. This shield-tube insert was placed inside the fuel tube to ensure that only the tube surface nearest the detector was counted. Under this method, for a given period of time, the NaI detector scanned only a small section on the circumference of the fuel tube. In

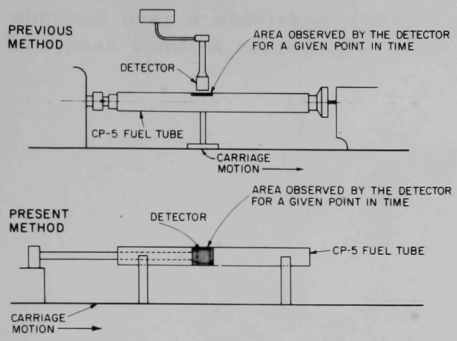

Fig. 3. Comparison of Setup of Past and Present Methods

contrast to this, under the new method, for a given period of time, the detector scanned the total circumference of a section of tube. Figure 3 shows this contrast.

Since the events occurring in a detector can be represented by a Poisson distribution, it can be shown that

$$\sigma = \sqrt{N},$$

where σ = the standard deviation and N = the total number of counts.

The precision of the measurement can be considered the ratio of σ/N or $\sqrt{N}/N$. Therefore, an increase in N will improve the precision of the measurement.

The significance is that even though the relative increase in precision was slight (approximately 7%), the counting time was reduced by more than 50%. When counting time was extended to equal that of the old method, the relative precision increase was approximately 25%.

Simplified Fuel Handling

CP-5 fuel is fabricated in three different diameters, which in the past required three different shield inserts. Fitting the fuel over the lead-filled inserts and positioning them in the lathe chuck was a delicate operation. The operator had to be careful not to damage the fuel as well as his fingers. At times, due to the weight of the shield, this caused the operator some anxious moments.

Under the present method, the fuel element or standard is placed in the V supports. The only adjustment needed is to center the fuel to allow the detector to pass through the fuel tube. Allen screws in the V supports, as shown in Fig. 4, are used to secure the brackets that are used to raise or lower the fuel to its proper location.

Greater Efficiency

The setup time required to get ready to count an element has been reduced, since the need to handle the insert has been eliminated. Also eliminated is the requirement of positioning the fuel in the lathe chuck. The detector, receiving counts from the entire fuel-tube circumference rather than a section thereof, has allowed a greater number of counts to be

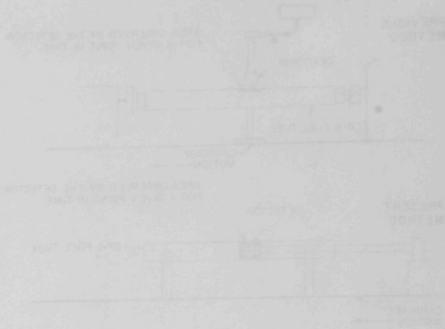

Fig. 3. Comparison of Setup of Past and Present Methods

contrast to this, under the new method, for a given period of time, the detector scanned the total circumference of a section of tube. Figure 3 shows this contrast.

Since the events occurring in a detector can be represented by a Poisson distribution, it can be shown that

$$\sigma = \sqrt{N},$$

where σ = the standard deviation and N = the total number of counts.

The precision of the measurement can be considered the ratio of σ/N or $\sqrt{N}/N$. Therefore, an increase in N will improve the precision of the measurement.

The significance is that even though the relative increase in precision was slight (approximately 7%), the counting time was reduced by more than 50%. When counting time was extended to equal that of the old method, the relative precision increase was approximately 25%.

Simplified Fuel Handling

CP-5 fuel is fabricated in three different diameters, which in the past required three different shield inserts. Fitting the fuel over the lead-filled inserts and positioning them in the lathe chuck was a delicate operation. The operator had to be careful not to damage the fuel as well as his fingers. At times, due to the weight of the shield, this caused the operator some anxious moments.

Under the present method, the fuel element or standard is placed in the V supports. The only adjustment needed is to center the fuel to allow the detector to pass through the fuel tube. Allen screws in the V supports, as shown in Fig. 4, are used to secure the brackets that are used to raise or lower the fuel to its proper location.

Greater Efficiency

The setup time required to get ready to count an element has been reduced, since the need to handle the insert has been eliminated. Also eliminated is the requirement of positioning the fuel in the lathe chuck. The detector, receiving counts from the entire fuel-tube circumference rather than a section thereof, has allowed a greater number of counts to be

obtained over a shorter scanning time. As a result, the scanning time has been reduced approximately 50%.

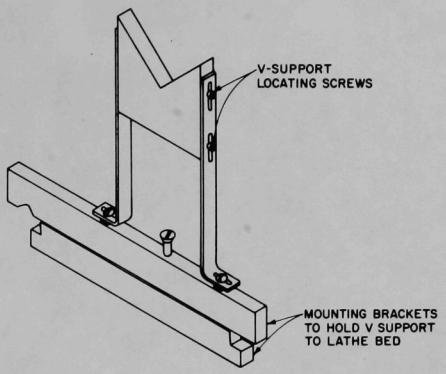

Fig. 4

V-Support

Another advantage to this method is that in some instances the individual wrapping covering the fuel tube did not have to be removed.

CONCLUSION

The procedural change has simplified the operation and brought about a more efficient and effective means of nondestructively assaying the CP-5 reactor fuel elements.

REFERENCES

1. N. S. Beyer, Quality Evaluation of CP-5 Reactor Fuel, Sixth Annual Meeting of Institute of Nuclear Materials Management, Cincinnati, Ohio (1965).

2. L. G. Kuncl, CP-5 Fuel Element Specification, Reactor Operations Division, Reactor Operations Technical Specification No. 1 (1965).

3. T. H. Busse and N. S. Beyer, Automatic Scan System for Reactor-fuel Assay, ANL-7174 (Mar 1966).

obtained over a shorter scanning time. As a result, the scanning time has been reduced approximately 50%.

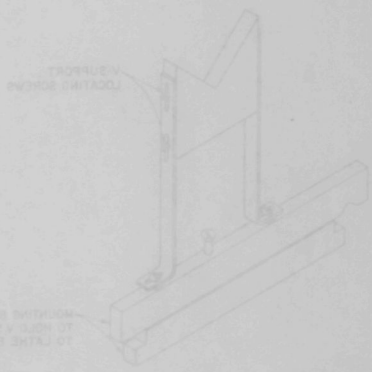

Fig. 4
V-support

Another advantage to this method is that in some instances the individual wrapping covering the fuel tube did not have to be removed.

CONCLUSION

The procedural change has simplified the operation and brought about a more efficient and effective means of nondestructively assaying the CP-5 reactor fuel elements.

REFERENCES

1. N. S. Beyer, Quality Evaluation of CP-5 Reactor Fuel, Sixth Annual Meeting of Institute of Nuclear Materials Management, Cincinnati, Ohio (1965).

2. L. G. Kunel, CP-5 Fuel Element Specification, Reactor Operations Division, Reactor Operations Technical Specification No. 1 (1965).

3. T. H. Bosse and N. S. Beyer, Automatic Scan System for Reactor-fuel Assay, ANL-7174 (Mar 1966).

ARGONNE NATIONAL LAB WEST
3 4444 00011017 1

B