Technical Memo

ANL/EES-TM-300

ADVANCED UTILITY SIMULATION MODEL (AUSM): REGIONALIZED PROJECTIONS OF END-USE ELECTRICITY DEMAND

RETURN TO REFERENCE FILE
TECHNICAL PUBLICATIONS
DEPARTMENT

ANL
EES

ARGONNE NATIONAL LABORATORY
Energy and Environmental Systems Division

Operated by
THE UNIVERSITY OF CHICAGO for U. S. DEPARTMENT OF ENERGY
under Contract W-31-109-Eng-38

[redacted]

Argonne National Laboratory, with facilities in the states of Illinois and Idaho, is owned by the United States government, and operated by The University of Chicago under the provisions of a contract with the Department of Energy.

DISCLAIMER

This report was prepared as an account of work sponsored by an agency of the United States Government. Neither the United States Government nor any agency thereof, nor any of their employees, makes any warranty, expressed or implied, or assumes any legal liability or responsibility for the accuracy, completeness, or usefulness of any information, apparatus, product, or process disclosed, or represents that its use would not infringe privately owned rights. Reference herein to any specific commercial product, process, or service by trade name, trademark, manufacturer, or otherwise, does not necessarily constitute or imply its endorsement, recommendation, or favoring by the United States Government or any agency thereof. The views and opinions of authors expressed herein do not necessarily state or reflect those of the United States Government or any agency thereof.

This informal report presents preliminary results of ongoing work or work that is more limited in scope and depth than that described in formal reports issued by the Energy and Environmental Systems Division.

Printed in the United States of America. Available from National Technical Information Service, U. S. Department of Commerce, 5285 Port Royal Road, Springfield, Virginia 22161.

ARGONNE NATIONAL LABORATORY
9700 South Cass Avenue, Argonne, Illinois 60439

ANL/EES-TM-300

ADVANCED UTILITY SIMULATION MODEL (AUSM): REGIONALIZED PROJECTIONS OF END-USE ELECTRICITY DEMAND

by

D.W. South, M.J. Bragen, D.A. Hanson,
and G.A. Boyd

Energy and Environmental Systems Division
Argonne Energy-Economic Modeling Program

June 1985

work sponsored by

U.S. DEPARTMENT OF ENERGY
Assistant Secretary for Fossil Energy
Office of Planning and Environment

CONTENTS

FOREWORD v

1 INTRODUCTION 1

1.1 Background and Scope 2
1.2 Organization 2

2 ARAM ALGORITHM FOR AUSM DRIVER DATA 3

3 PREPARATION OF PROJECTIONS 5

3.1 Residential and Commercial Sectors 5
3.2 Industrial Sector 6
3.2.1 Manufacturing Industries 6
3.2.2 Nonmanufacturing Industries 7
3.3 Scenario-Specific Considerations 8
3.4 Electricity Demand Input for AUSM 8

4 OBSERVATIONS 10

4.1 Comparison of National Projections by Scenario 10
4.2 State-Level Projections of End-Use Electricity Demand, by Sector 12

REFERENCES 19

APPENDIX: NATIONAL AND STATE-LEVEL PROJECTIONS OF ELECTRICITY DEMAND, BY END-USE SECTOR AND SCENARIO 20

FIGURES

1 Block Diagram of the Energy-Economic Driver Module 1

2 NEPP-85 Projections of Total Electricity Demand, by Scenario 11

3 NEPP-85 Projections of Residential Electricity Demand, by Scenario 11

4 NEPP-85 Projections of Commercial Electricity Demand, by Scenario 13

5 NEPP-85 Projections of Industrial Electricity Demand, by Scenario 13

TABLES

1 End-Use Electricity Demand under the Reference Scenario, by Sector and State, for Selected Years: 1980, 2000, and 2030 15

TABLES (Cont'd)

2 Direction of Change in Projected Electricity Demand, by State, where State Shares Are Greater Than 3%: Reference Scenario 17

3 Relative Growth in End-Use Electricity Demand by Sector, Measured by Change in State Share: Reference Scenario 18

FOREWORD

Under the auspices of the National Acid Precipitation Assessment Program (NAPAP), activities supporting the preparation of future assessments have been planned and delegated to task groups. Task Group B (TG-B), "Man-Made Sources" (subsequently redesignated Task Group I, "Emissions and Controls"), of the Interagency Task Force on Acid Precipitation is responsible for developing and testing models that can be used to project fuel use and air pollutant emissions by energy use sector. Argonne has participated in the TG-B program since 1984.

The TG-B program is being carried out in two phases. Phase 1 includes development of the models for generation of baseline scenarios. Phase 2 will address the capabilities for modeling emission control scenarios. Under Phase 1, the sector models are being developed and tested. This testing is designed to aid in model development and help prepare the models for use by the task force. Upon completion, the sector models will be incorporated into the TG-B emissions model set and linked to a system of models that provide scenario-consistent input data.

The Argonne Energy-Economic Modeling Program is publishing a series of reports that document the steps undertaken to prepare national and regional projections of energy and economic activity required as input to the sector emissions models. This report is part of this series; it documents the methodology used to translate national control forecasts into the specific regional data needed to drive the sector models. Separate reports are being prepared for each sector model because the driver data are highly specific.

Although the configuration of the driver data for each sector model is different, a common regionalization scheme is employed to prepare the driver data. The Argonne Regionalization Activity Module (ARAM) was developed to systematically generate regional and state forecasts of energy and economic variables required by the sector models of the TG-B emissions model set. This report focuses on the generation and description of the driver data for the Advanced Utility Simulation Model (AUSM).

ADVANCED UTILITY SIMULATION MODEL (AUSM): REGIONALIZED PROJECTIONS OF END-USE ELECTRICITY DEMAND

by

D.W. South, M.J. Bragen, D.A. Hanson, and G.A. Boyd

1 INTRODUCTION

In the National Acid Precipitation Assessment Program (NAPAP), Task Group B (TG-B) is responsible for developing and testing models that can be used to project fuel use and air pollutant emissions by energy use sector. As discussed in the foreword, this work is being carried out in two phases. All activities described in this report have taken place under Phase 1 of the TG-B program. This report addresses one aspect of the system designed to supply energy-economic driver data to the TG-B emissions model set: provision of regionalized projections of end-use electricity demand. The components of the Energy-Economic Driver Module are shown in Fig. 1.

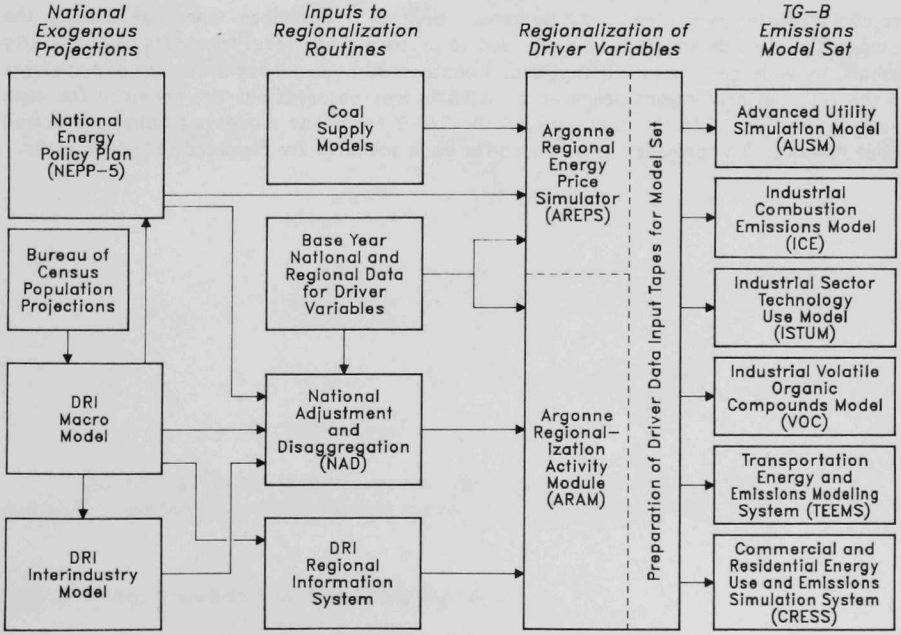

FIGURE 1 Block Diagram of the Energy-Economic Driver Module

1.1 BACKGROUND AND SCOPE

The Advanced Utility Simulation Model (AUSM) requires annual growth rates in state-level electricity demand as one of its inputs.* Projections of state-level electricity demand by end-use sector are derived from a national electricity forecast (i.e., the 1985 National Energy Policy Plan, NEPP-85) with the use of a dynamic regionalization scheme. The Argonne Regionalization Activity Module (ARAM) was developed to generate regional forecasts of such energy and economic variables. The derivation of the generic regionalization algorithm embedded in ARAM and a general discussion of its applications as part of the energy-economic driver module is found in Sec. 2.

This report documents one specific application of ARAM; it describes the computational steps and data sources used to project annual and sector-specific state-level electricity demand for AUSM. The AUSM demand module requires only a forecast of total electricity demand to operate in the exogenous mode. However, its projections are more accurate and reliable if electricity demand is regionalized by sector, because regional activities may grow at different rates in different sectors.

1.2 ORGANIZATION

Section 2 of this report describes the configuration of ARAM as it is used in projecting state-level electricity demand. Section 3 describes more specifically the computational steps and data sources used to prepare state-level forecasts of electricity demand by end-use sector. Finally, Sec. 4 contains some summary statistics and analyses of the regional projections prepared by ARAM. Key observations are provided for each scenario considered in the test runs of the TG-B emissions model set being performed under Phase 1. The projections prepared for each scenario are reported in the appendix.

---

*Other AUSM input files have different data sources and procedures.[1]

2 ARAM ALGORITHM FOR AUSM DRIVER DATA

ARAM bridges the gap between national and regional modeling. It transforms the energy and economic variables produced by national forecasting models into the regional variables required as input for models of end-use sectors. The regional projections are produced with a generic regionalization algorithm. The algorithm is based on a modified shift-share approach. Beginning with base-year 1980 values by state or region, and taking into account national growth, the regional shifts in shares of the desired driver variable are calculated on the basis of a forecast of related economic activity variables, such as employment in the associated industry.*

The regionalization algorithm used in ARAM is defined as:

$$ELEC_{r,s}(t) = [ELEC_{n,s}(t)] \frac{[ELEC_{r,s}(1980)][ACTINDEX_{r,s}(t)]}{\Sigma\ [ELEC_{r,s}(1980)][ACTINDEX_{r,s}(t)]} \quad (1)$$

where:

$ELEC_{r,s}(t)$ = electricity demand in state r, by end-use sector s and time t.

$ELEC_{n,s}(t)$ = national electricity demand, by end-use sector s and time t.

$ELEC_{r,s}(1980)$ = base-year (1980) electricity demand, by state r and end-use sector s.

$ACTINDEX_{r,s}(t)$ = activity index (1980 = 1.0) by state r, end-use sector s, and time t. Employment is the activity variable indexed for the commercial and industrial sectors and population is the activity variable for the residential sector.

s = end-use sectors: residential, commercial, and industrial. The industrial sector is disaggregated into manufacturing and non-manufacturing industries.

r = 50 states and the District of Columbia.‡

t = 1980-2030, annually.

According to the regionalization algorithm, state-level electricity demand by sector is projected over the 1980-2030 period by multiplying a sector-specific forecast of

*For a further description of ARAM see Ref. 2.

‡AUSM models only the 48 contiguous states; the District of Columbia is included with Maryland.

national electricity demand by an energy-weighted shift-share factor. The shift-share factor varies by end-use sector and year, 1980-2009, in each state. Beyond the year 2009, state shares are taken to be constant and equal to those shares that existed in 2009. This assumption was determined through an empirical analysis of state shares for the period 2000-2009. State shares were computed from Data Resources, Inc., Regional Information Service (DRI/RIS) forecasts. The analysis showed that state shares after the year 2000 are relatively stable for all variables of interest. Initially, economic and demographic variables are projected to grow at different rates by state. However, beyond the year 2000, the state growth rate projections essentially converge to the national average. The 1980-2000 period can be viewed as a period of adjustment where some states gain in shares and other states lose in shares. By 2000, the projected adjustment in shares has been essentially completed.

3 PREPARATION OF PROJECTIONS

As indicated earlier, the generation of state-level electricity demand projections for AUSM is an automated procedure contained in ARAM. A submodule in ARAM assembles and prepares the input data for the regionalization algorithm. Because data sources and procedures for the residential and commercial sectors differ from those for the industrial sector, the following discussion is divided accordingly. Each section addresses the respective variables needed by the regionalization algorithm.

3.1 RESIDENTIAL AND COMMERCIAL SECTORS

The data sources for each ARAM input variable are the same for both the residential and commercial sectors. The only difference arises with respect to the regional activity variable (ACTINDEX) used in the shift-share component of the regionalization algorithm. Here, population is used to regionalize residential electricity demand and employment is used to regionalize commercial sector demand. Each input variable and its data source are defined below.

$ELEC_{n,s}(t)$ = projected national end-use electricity demand for each sector (residential and commercial). Projections for 1980 through 2010 are taken directly from NEPP-85.* Projections for the years 2020 and 2030 are taken from the long-term extension of NEPP-85. Data in NEPP-85 are reported in 5-year increments; these data are interpolated to create a vector of annual values for each sector.

$ELEC_{r,s}(1980)$ = base-year (1980) end-use electricity demand, by state, for each sector (residential and commercial). Data for this variable are extracted from the State Energy Price and Expenditure Data System (SEPEDS).[4]

$ACTINDEX_{r,s}(t)$ = state-level activity index. This index is computed from DRI/RIS projections for the period 1980-2009.[5,6] State-level population projections (POP) taken from the DRI/RIS data file are indexed [POP(t)/POP(1980)] for use as the residential-sector activity index. Employment in the commercial sector is indexed similarly. These employment projections are computed from data available on the DRI/RIS data file.

Once the data for each input variable are assembled, the ARAM regionalization algorithm can project state-level electricity demand for the residential and commercial

---

*A draft version of NEPP-85, dated April 1985, was used to prepare the AUSM driver data.[3] Subsequent references to NEPP-85 correspond to these draft projections and not the final NEPP-85 projections.

sectors. Two facts should be noted. First, two variables are scenario-specific: $ELEC_{n,s}(t)$ and $ACTINDEX_{r,s}(t)$. Second, the shift-share factor of the ARAM regionalization algorithm is held constant after 2009 to correspond with the assumption of constant state shares in the post-2009 period. Consequently, the input variable ACTINDEX does not require an explicit extension from 2009 to 2030.

3.2 INDUSTRIAL SECTOR

Preparing industrial-sector input data for the ARAM regionalization algorithm is somewhat more involved. First, the industrial sector is divided into its two major components: manufacturing and nonmanufacturing (i.e., other industrial). Then, the manufacturing sector is further divided according to how it acquires electricity: through purchase or self-generation. Because different variables are used in each case, the following discussion of data preparation is divided accordingly.

3.2.1 Manufacturing Industries

Manufacturing industries correspond to Standard Industrial Classifications (SICs) 20 through 39. Each ARAM input variable associated with the manufacturing sector is defined below:

$ELEC_{n,s}(t)$ = national end-use electricity demand for the manufacturing sector in time t. Derived from the NEPP-85 projection of total industrial electricity demand and industrial cogeneration. The manufacturing sector is assumed to maintain a constant share of end-use industrial electricity demand, with the share equal to its 1980 value. All industrial cogeneration is assumed to occur in the manufacturing sector.*

$ELEC_{r,s}(1980)$ = base-year (1980) end-use electricity demand by state for the manufacturing sector. Extracted from the 1980 Annual Survey of Manufactures (ASM).[8] Two arrays are assembled; one for purchased electricity and the other for nonpurchased or self-generated electricity (in ASM this category is called "generated less sold"). Because of disclosure problems in the nonpurchased electricity category, some of the state data in each electricity category are missing in the ASM data file. These missing values are generated by apportioning that part of the national total (in each category) not allocated to a state. The apportioning scheme is based on the state share of purchased electricity, when nonpurchased electricity is the

*For a complete description of these projections and the method used to generate them, see Ref. 7.

missing value. After the surrogate data are generated to fill the missing cells, the purchased and nonpurchased electricity values for the manufacturing sector in each state are totaled.

$ACTINDEX_{r,s}(t)$ = state-level activity index for the manufacturing sector. Computed from DRI/RIS projections for the period from 1980 through 2009.* State-level manufacturing employment (EMSUM) is indexed by [EMSUM(t)/EMSUM(1980)].

3.2.2 Nonmanufacturing Industries

Nonmanufacturing industries are composed of three sectors: agriculture (SICs 1-2), construction (SICs 15-17), and mining (SICs 10-14). Each ARAM input variable associated with the nonmanufacturing sector is defined below:

$ELEC_{n,s}(t)$ = national end-use electricity demand for the nonmanufacturing sector in time t. Derived from the NEPP-85 projection of total industrial electricity demand and industrial cogeneration. Nonmanufacturing industries are assumed to maintain a constant share of end-use industrial electricity demand. The share equals its 1980 value. All industrial cogeneration is assumed to occur in the manufacturing sector.‡

$ELEC_{r,s}(1980)$ = base-year (1980) end-use electricity demand by state for the nonmanufacturing sector. Computed as the difference between state industrial electricity demand in the SEDS data base and state values for purchased electricity (for the manufacturing sector) in the ASM.§

$ACTINDEX_{r,s}(t)$ = state-level activity index for the nonmanufacturing sector. Computed from DRI/RIS projections for the period from 1980 through 2009. The DRI/RIS projections do not include an agricultural employment variable, so one is constructed with total employment and state agricultural shares (1980-2009) computed from the U.S. Department of Commerce 1980

---

*For a discussion of these DRI/RIS projections, see Ref. 6.

‡See Ref. 7.

§This method corresponds with the procedure used in the DOE/EIA PURHAPS model to determine base-year nonmanufacturing electricity demand. The method, however, requires some state-specific adjustments to reconcile data inconsistencies and to attain agreement with 1980 DOE/EIA total industrial electricity sales data contained in the State Energy Data System (SEDS)[9] and the Electric Power Annual.[10]

OBERS projections. The sum of the three state-level employment variables (agriculture, construction, and mining) are then indexed [EACM(t)/EACM(1980), where EACM = employment in agriculture, construction, and mining].

Once the data for each input variable are assembled for the manufacturing and nonmanufacturing industries, the ARAM regionalization algorithm can generate state-level projections of electricity demand for the industrial sector. Again, note that two variables are scenario-specific: $ELEC_{n,s}(t)$ and $ACTINDEX_{r,s}(t)$. Also, the shift-share factor of the ARAM regionalization algorithm is held constant after 2009 to correspond with the assumption of constant state shares in the post-2009 period. Consequently, the input variable ACTINDEX does not require an explicit extension from 2009 to 2030.

3.3 SCENARIO-SPECIFIC CONSIDERATIONS

Three economic growth scenarios are included in the Phase 1 test runs of the TG-B emissions model set. These scenarios correspond with those in the NEPP-85 and are called the low, reference, and high scenarios. A macroeconomic forecast for the low and reference scenarios was prepared by DRI. The macroeconomic forecast for the high scenario was prepared by Argonne, but for only selected variables. It is based on growth rates of the gross national product in the NEPP-85 high scenario and on economic relationships derived from the DRI forecasts (low and reference scenarios).

As indicated in Sec. 2, a regional economic activity forecast is required as an input to the ARAM formula; the forecasted values are supplied to variable $ACTINDEX_{r,s}(t)$. The regional economic activity forecast used in ARAM to regionalize national end-use electricity demand for the low and reference scenarios was prepared by the DRI/RIS model. Because the reference macroeconomic scenario represents relatively high economic growth, and the regional distribution of economic activity would undergo only a marginal redistribution of activity shares under a higher economic growth scenario, the high-growth scenario in the Phase 1 test runs was based on regional shares from the DRI/RIS reference forecast. A separate regional forecast for the high scenario could be prepared in future assessments.

3.4 ELECTRICITY DEMAND INPUT FOR AUSM

This report describes how regional electricity demand projections are prepared for each of the four end-use sectors. As indicated, industrial end-use electricity demand is the sum of manufacturing and nonmanufacturing demand. Utility sales to the industrial sector are defined as end-use demand less industrial generation of electricity. Total utility sales are the sum of industrial sales plus residential and commercial demand.* Total utility sales are only one of the input requirements for AUSM. Other inputs, such as the portion of utility generation produced by fossil fuels, were derived with a variation of the ARAM methodology.[11]

---

*Institutional electricity generation in the commercial sector is neglected.

4 OBSERVATIONS

In preparation for the Phase 1 test runs of AUSM, state-level electricity demand by end-use sector was projected by ARAM. Electricity demand under the three scenarios was projected and is reported in the appendix. The state-level projections of electricity demand described here are based on energy and economic forecasts for each scenario. This section reports some observations on projections of end-use electricity demand for the reference scenario (Sec. 4.2). To provide perspective, Sec. 4.1 compares the national projections by end-use sector and scenario.

4.1 COMPARISON OF NATIONAL PROJECTIONS BY SCENARIO

For the Phase 1 test runs of the TG-B emissions model set, the Office of Policy, Planning, and Analysis (PPA) in the U.S. Department of Energy (DOE) supplied national forecasts of energy demand and fuel prices by sector and scenario. These projections were generated by its system dynamics model, WOIL/FOSSIL2, for the years 1980 through 2010 and are reported in the NEPP-85. The forecasts of national electricity demand by end-use sector for input to ARAM are included in these NEPP-85 projections. Consequently, these projections require no further disaggregation before being input to ARAM.

One adjustment to the NEPP-85 forecast is necessary, however; its time horizon must be extended. Normally, the PPA only generates a projection to the year 2010 as part of its NEPP activities. The test runs, however, require a forecast to the year 2030. Therefore, a methodology was devised to extend the NEPP-85 projections to 2030. This methodology was provided by PPA and is consistent with the NEPP-85 forecasts generated through 2010 by the WOIL/FOSSIL2 model. The following figures show the NEPP-85 electricity demand projections by end-use sector and scenario. Tabular summaries of the projections are reported in the appendix.

Between 1980 and 2030, total electricity demand increases from 7.2 quads (1 quad = 10^{15} Btu) to 18.4 quads in the reference scenario, 15.1 quads in the low scenario and 22.4 quads in the high scenario. This growth in total electricity demand by scenario is shown in Fig. 2. When expressed as average annual growth rates, these projected changes in electricity demand are 1.89%, 1.49%, and 2.30%, respectively. These growth rates are symmetrically distributed and thereby appropriately represent the three growth cases being examined. In each scenario, the growth rate of projected demand is greater in the 1980-2000 period than in the subsequent 30 yr (2000-2030). The average annual growth rates for the reference, low, and high scenarios during the 1980-2000 period are 2.41%, 1.86%, and 2.80%. In contrast, the corresponding growth rates for the 2000-2030 period are 1.55%, 1.25%, and 1.96%, respectively.

Residential electricity demand is roughly 30% of total national electricity demand. In the reference case, the sector share of total demand declines from 35% in 1980 to 31% in 2000 and then to 28% in 2030. Figure 3 plots projected residential electricity demand by scenario as reported in the NEPP-85. Projected demand under the three scenarios is similar until 2000. Thereafter, the differences in projected demand

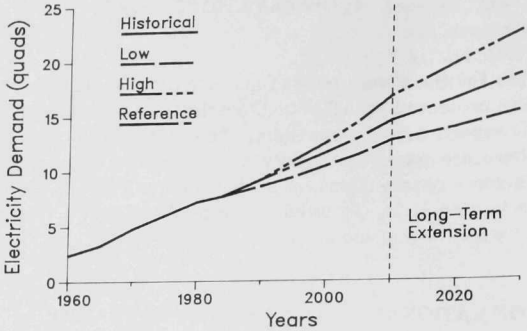

FIGURE 2 NEPP-85 Projections of Total Electricity Demand, by Scenario

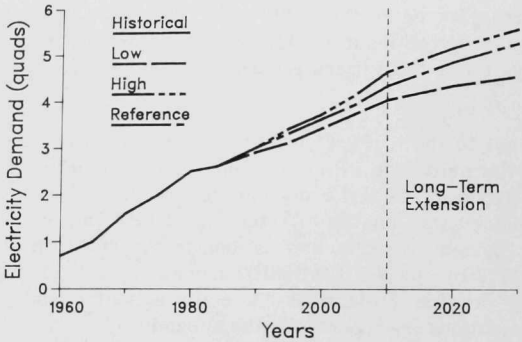

FIGURE 3 NEPP-85 Projections of Residential Electricity Demand, by Scenario

become somewhat greater. The difference in projected demand between the high and low scenarios is 0.3 quads in 2000 and 1.6 quads in 2010. As with total electricity demand, the average annual growth rates for residential demand are greater in the 1980-2000 period than in the 2000-2030 period; 1.84% versus 1.23% for the reference scenario. The slower growth rate in the post-2000 period reflects a combination of factors: greater energy efficiency and conservation measures implemented by households, and slower population and household growth.

The commercial sector exhibits a growth pattern different from that of the residential sector. Electricity demand grows faster in the 1980-2000 period in the commercial sector than in the residential sector, but slower in the 2000-2030 period. Throughout the study period the commercial sector demand remains roughly 26% of total national electricity demand. Figure 4 plots projected commercial electricity demand by

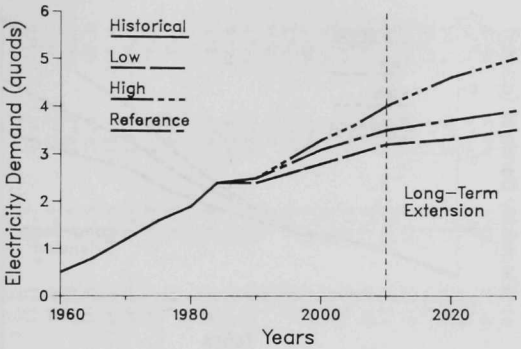

FIGURE 4 NEPP-85 Projections of Commercial Electricity Demand, by Scenario

scenario as reported in the NEPP-85. The post-2010 period reflects the pattern of projected demand that is forecast for the period 1980 to 2010; the low and reference scenarios exhibit a parallel demand path, whereas the high scenario reflects a slightly faster growth rate. Between 1980 and 2000, the average annual growth rate for the reference case is 2.48%, while after 2000 the growth rate is 0.77%. The slower growth in the post-2000 period reflects a moderation in commercial sector growth, together with energy-efficiency improvements (i.e., less energy use per worker in the commercial sector).

Electricity demand in the industrial sector is projected to grow at a fairly constant rate throughout the 50-yr period (1980-2030) under each of the three scenarios. Figure 5 illustrates the projected growth of industrial electricity demand under each scenario in the NEPP-85. Between 1980 and 2000, the average annual growth rates for the reference, low, and high scenarios are 2.84%, 2.05%, and 3.43%, respectively. From 2000 to 2030, the growth rates are 2.16%, 1.77%, and 2.61%. According to any of the scenarios considered, electricity demand in the industrial sector is projected to grow continuously throughout the 1980-2030 period. This projection reflects the NEPP-85 outlook that industrial electricity use per unit of output will increase throughout the study period. This projected trend is a result of electricity-based technologies displacing fossil-fuel-fired processes and machinery.

Under the reference scenario, industrial electricity demand expands from 2.8 quads in 1980 to 4.9 quads in 2000 and finally to 9.3 quads in 2030. This growth path reflects a more than threefold increase in electricity demand, which when averaged over 50 yr is an annual rate of 2.43%. The overall rate of growth under the low scenario is 1.88%; it is 2.94% under the high scenario.

4.2 STATE-LEVEL PROJECTIONS OF END-USE ELECTRICITY DEMAND, BY SECTOR

ARAM transforms the national projections described above into state-level projections of end-use electricity demand, by sector. The complete state-level

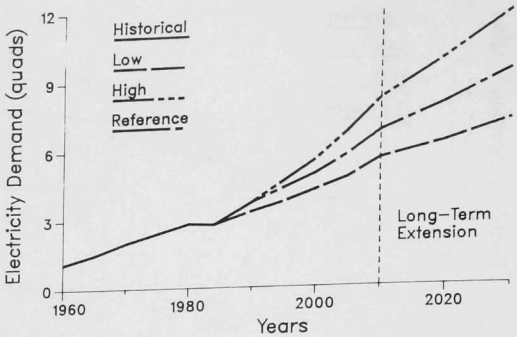

FIGURE 5 NEPP-85 Projections of Industrial Electricity Demand, by Scenario

projections are reported in the appendix. In this section, three summary tables highlight some of the important trends and patterns in the state-level projections under the reference scenario.

Table 1 presents projections of end-use electricity demand by sector, under the reference scenario, for the years 2000 and 2030. State values for the year 1980 are included for comparison. End-use electricity demand in each end-use sector and state is projected to grow throughout the 1980-2030 study period. The states differ, though, in the rate at which end-use electricity demand is projected to grow within each period and sector. Growth rates by period are reported in the appendix.

In most cases, those states that consume a large share of the total end-use electricity demand within each sector in 1980 continue to demand a significant share in subsequent years. These states are easily identified in Table 1 since their values are noticeably greater than other state values. Note that a state with a large share of demand in one sector need not have a large share in all sectors. Table 2 lists the states within each end-use sector that have a demand share greater than 3.0%. Most states that have a demand share greater than 3.0% in one sector are similarly classified in the other end-use sectors. However, as indicated above, there are exceptions to this pattern. For example, four states included in Table 2 have a demand share of less than 3.0% in both the residential and commercial sectors. The industrial sector has two states that have shares of less than 3.0% when the state share in either the residential or commercial sectors is greater than 3.0%.

The other pattern depicted in Table 2 is the direction of change in projected end-use electricity demand, by state, where a state share is greater than 3.0%. Six states have projected increases in demand shares during the 1980-2030 period: California, Florida, North Carolina, Tennessee, Texas, and Washington. North Carolina and Tennessee are projected to have demand shares that both increase (industrial sector) and decline (residential sector); however, their overall (total) shares are projected to grow. Many other states have significant increases in their demand shares but do not meet the 3.0% national share criterion. The appendix contains a table of state shares, by period and end-use sector, that identifies these states.

TABLE 1 End-Use Electricity Demand under the Reference Scenario, by Sector and State, for Selected Years: 1980, 2000, and 2030 (10^9 kWh)

State	FIPS Code[a]	Total			Residential			Commercial			Industrial		
		1980	2000	2030	1980	2000	2030	1980	2000	2030	1980	2000	2030
Alabama	1	53.3	90.9	148.5	16.5	22.4	31.6	7.2	10.4	13.1	29.7	53.1	103.8
Alaska	2	3.2	5.6	8.1	1.1	1.8	2.5	0.7	1.3	1.6	1.4	2.5	3.9
Arizona	4	27.3	57.7	91.5	9.6	18.9	29.9	9.1	18.7	24.9	8.6	20.2	36.7
Arkansas	5	28.0	48.2	74.8	10.2	15.4	22.0	5.3	8.5	10.5	12.5	24.4	42.2
California	6	168.9	315.3	481.3	52.0	87.2	128.7	63.4	113.1	146.2	53.6	115.0	206.4
Colorado	8	21.1	40.9	64.2	6.7	11.8	17.9	7.2	13.2	16.9	7.1	15.9	29.3
Connecticut	9	21.4	35.4	52.5	8.2	11.6	16.3	7.0	12.0	14.7	6.1	11.9	21.5
Delaware	10	5.9	9.9	15.4	1.9	2.7	3.9	1.5	2.5	3.2	2.5	4.8	8.3
District of Columbia	11	7.0	9.2	14.4	1.1	1.3	1.8	2.6	3.6	4.5	3.4	4.3	8.1
Florida	12	93.8	188.9	299.9	44.7	86.5	136.6	27.3	51.8	69.0	21.7	50.6	94.3
Georgia	13	54.2	94.9	146.3	20.0	31.5	46.3	12.0	21.3	27.9	22.2	42.0	72.2
Hawaii	15	6.6	10.7	16.4	1.8	3.0	4.5	1.5	2.3	2.9	3.3	5.4	9.0
Idaho	16	13.9	22.9	34.3	4.9	7.1	10.0	4.0	5.7	7.0	5.0	10.0	17.3
Illinois	17	98.5	139.5	205.4	29.9	38.4	52.7	31.6	44.4	53.9	37.0	56.7	98.7
Indiana	18	63.9	99.2	154.1	19.3	24.4	33.0	10.4	14.7	17.7	34.2	60.1	103.3
Iowa	19	25.3	34.7	51.2	10.0	12.2	16.4	5.5	7.8	9.8	9.8	14.7	25.0
Kansas	20	21.9	35.2	55.0	7.2	9.8	13.8	6.8	10.8	14.0	7.9	14.6	27.2
Kentucky	21	49.8	81.9	133.8	13.1	17.7	25.1	8.4	12.2	15.4	28.3	51.9	93.4
Lousiana	22	63.2	102.6	164.0	16.8	26.6	39.3	12.7	19.9	25.2	33.7	56.0	99.5
Maine	23	12.1	21.5	35.4	3.0	4.3	6.1	1.7	2.8	3.4	7.4	14.4	25.8
Maryland	24	34.8	54.6	83.6	12.1	17.1	24.3	9.4	14.8	19.5	13.3	22.8	39.9
Massachusetts	25	33.7	56.3	82.2	11.6	16.2	22.7	13.2	21.8	26.7	9.0	18.4	32.8
Michigan	26	72.5	109.3	169.6	22.3	27.8	37.8	16.7	22.6	27.5	33.6	58.9	104.3
Minnesota	27	33.5	55.3	88.9	11.7	16.1	22.8	5.7	9.1	11.5	16.0	30.1	54.5
Mississippi	28	23.4	35.7	54.4	10.0	13.9	19.8	5.1	7.2	8.9	8.4	14.7	25.6
Missouri	29	42.8	62.4	89.9	18.6	23.7	32.0	12.9	18.5	22.9	11.2	20.2	35.0
Montana	30	10.9	17.5	27.1	2.9	4.2	5.7	2.1	3.3	4.0	5.9	10.1	17.4
Nebraska	31	13.8	19.8	28.4	5.5	6.8	9.1	4.0	5.8	7.0	4.2	7.2	12.3
Nevada	32	10.4	23.3	44.3	3.7	7.8	12.9	1.8	3.6	5.0	5.0	11.9	26.4
New Hampshire	33	6.0	11.7	18.6	2.5	3.9	5.6	1.1	2.0	2.6	2.5	5.8	10.4
New Jersey	34	50.1	80.2	117.9	16.3	22.2	30.4	16.9	26.9	32.6	16.9	31.0	54.9
New Mexico	35	8.8	16.7	26.0	2.5	4.3	6.5	3.4	6.0	7.9	3.0	6.4	11.6
New York	36	107.1	164.5	242.4	30.6	40.6	56.2	42.2	62.7	77.0	34.3	61.1	109.2
North Carolina	37	66.3	112.4	173.9	24.4	36.0	51.5	14.2	24.1	31.5	27.7	52.3	90.9

TABLE 1 (Cont'd)

State	FIPS Code[a]	Total			Residential			Commercial			Industrial		
		1980	2000	2030	1980	2000	2030	1980	2000	2030	1980	2000	2030
North Dakota	38	5.2	7.3	10.5	2.5	3.1	4.3	1.1	1.6	1.8	1.6	2.6	4.4
Ohio	39	115.0	171.1	264.7	33.5	42.0	57.1	23.2	31.7	38.4	58.3	97.4	169.2
Oklahoma	40	31.6	54.9	84.5	12.3	19.4	28.1	8.9	14.9	19.1	10.4	20.5	37.3
Oregon	41	38.0	60.8	93.4	13.5	20.0	28.7	10.4	15.5	19.4	14.0	25.3	45.3
Pennsylvania	42	101.9	151.3	233.1	31.8	41.1	56.5	21.9	32.1	39.8	48.3	78.1	136.9
Rhode Island	44	5.2	7.8	10.5	1.8	2.4	3.1	1.9	2.9	3.5	1.4	2.5	3.9
South Carolina	45	39.2	67.1	104.5	12.6	19.5	28.5	8.7	14.7	19.2	17.9	32.9	56.9
South Dakota	46	5.1	7.0	9.7	2.6	3.2	4.3	1.1	1.6	2.0	1.3	2.1	3.5
Tennessee	47	75.8	124.6	196.7	26.2	35.8	50.4	14.2	22.3	28.1	35.4	66.6	118.0
Texas	48	191.6	345.0	548.8	57.2	95.1	139.3	43.9	80.3	103.0	90.5	169.6	306.5
Utah	49	10.8	21.5	34.8	3.1	5.7	8.5	3.1	5.8	7.6	4.5	10.0	18.7
Vermont	50	4.0	7.1	10.9	1.8	2.6	3.7	0.9	1.6	1.9	1.3	2.9	5.3
Virginia	51	50.6	84.5	126.9	19.7	29.2	42.4	16.8	28.9	38.2	14.1	26.4	46.2
Washington	53	70.6	120.1	190.8	24.4	37.0	53.3	13.7	21.7	27.3	32.5	61.4	110.2
West Virginia	54	22.1	33.3	52.7	6.6	8.7	12.2	3.7	5.3	6.8	11.8	19.2	33.7
Wisconsin	55	33.9	57.7	87.4	13.6	17.8	24.4	10.0	14.4	17.6	15.4	25.5	45.4
Wyoming	56	7.2	12.1	19.0	1.4	2.4	3.4	1.1	2.2	2.8	4.7	7.5	12.8
Total		2166.2	3598.0	5572.6	717.5	1060.0	1524.0	558.8	903.0	1143.0	889.9	1635.0	2905.5

[a]FIPS = Federal Information Processing Standards.

TABLE 2 Direction of Change in Projected Electricity Demand, by State, where State Shares Are Greater Than 3%: Reference Scenario[a]

State	Total	Residential	Commercial	Industrial
Alabama				+
California	+	+	+	+
Florida	+	+	+	+[b]
Illinois	-	-	-	-
Indiana				-
Kentucky				+
Louisiana				-
Michigan	-	-		-
New Jersey			-	
New York	-	-	-	+
North Carolina	+	-		+
Ohio	-	-	-	-
Pennsylvania	-	-	-	-
Tennessee	+	-		+
Texas	+	+	+	+
Virginia			+	
Washington	+	+		+

[a]Positive sign (+) = increase in share.
Negative sign (-) = decline in share.

[b]Florida does not have a share greater than 3% in 1980 but does have a share greater than 3% by 2030.

Table 2 also indicates states with projected decreases in demand shares. Those are principally the heavily industrialized states: Illinois, Indiana, Michigan, Ohio, and Pennsylvania.

Table 3 presents a statistic that captures the change in state shares for the forecast years 2000 and 2030. Relative growth from 1980 is measured by a change in state shares and presented as a percentage. The footnote on Table 3 explains how that percentage was computed. Some interpretation of this statistic is presented below.

First, negative values in Table 3 indicate a decline in state electricity demand shares from 1980, while positive values indicate an increase. For example, Florida is projected to increase its share of total end-use electricity demand by 21.29% by the year 2000, compared with 1980. Equivalently, the electricity growth index in the year 2000 is

21.29% greater for Florida than for the nation as a whole. This shift in state electricity demand shares is based totally on the projected growth in the state activity index (obtained from the DRI/RIS model) that is input to ARAM. Specifically, the percentage change in state shares, as shown in Table 3, is mathematically equal to

$$[ACTINDEX_{r,s}(t)/\overline{ACTINDEX}_{r,s}(t) - 1.0] \times 100\%$$

where $\overline{ACTINDEX}_{r,s}(t)$ is the weighted average growth in activity in the United States. [State end-use electricity demand in the base year (1980) is used as the weight.] The statistic presented in Table 3 is divorced from the national-level growth rate of demand and the base-year electricity demand [except for the use of base-year weights in computing $ACTINDEX_{r,s,}(t)$]. As such, it is a pure measure of the shift-share factor calculated from ARAM.

Table 3 contains a significant number of relatively large negative values. That reflects an adjustment in the distribution of end-use electricity demand by state. States with higher economic growth will increase their share of end-use electricity demand, causing state shares in lower-growth states to readjust. The states with significant positive values are Arizona, California, Colorado, Florida, Nevada, New Mexico, Utah, and, in most end-use sectors, Texas and Wyoming.

TABLE 3 Relative Growth in Electricity Demand by Sector, Measured by Change in State Share: Reference Scenario (%)[a]

State	FIPS Code	Total		Residential		Commercial		Industrial	
		2000	2030	2000	2030	2000	2030	2000	2030
Alabama	1	2.66	8.28	-7.80	-9.68	-10.05	-10.47	6.48	7.11
Alaska	2	6.56	-1.70	14.52	9.33	14.01	10.36	-2.37	-13.13
Arizona	4	27.41	30.39	32.54	45.83	27.47	34.47	28.10	31.07
Arkansas	5	3.57	3.72	1.61	1.35	-1.07	-2.66	6.18	3.41
California	6	12.38	10.75	13.49	16.46	10.43	12.78	16.92	18.08
Colorado	8	16.80	18.49	19.27	26.07	12.35	14.30	21.58	26.14
Connecticut	9	-0.11	-4.42	-4.75	-6.57	5.60	2.11	5.78	7.87
Deleware	10	1.40	1.25	-2.88	-2.74	1.90	2.32	2.94	1.39
District of Columbia	11	-21.07	-20.10	-20.07	-23.37	-13.16	-13.04	-30.16	-26.42
Florida	12	21.29	24.31	30.89	43.77	17.49	23.56	26.63	32.80
Georgia	13	5.40	4.97	6.59	8.79	10.22	13.98	3.03	-0.45
Hawaii	15	-2.72	-3.74	10.24	14.02	-2.24	-1.89	-11.59	-16.89
Idaho	16	-0.71	-4.02	-2.05	-4.98	-10.80	-14.03	9.70	6.67
Illinois	17	-14.73	-18.93	-13.14	-17.04	-13.12	-16.54	-16.46	-18.21
Indiana	18	-6.53	-6.26	-14.10	-19.25	-12.61	-16.73	-4.50	-7.56
Iowa	19	-17.33	-21.27	-17.88	-23.01	-11.70	-12.57	-17.97	-21.63
Kansas	20	-3.19	-2.40	-7.87	-9.83	-1.53	1.08	0.50	5.08
Kentucky	21	-0.93	4.56	-8.18	-9.74	-9.47	-9.86	-0.24	0.95
Louisiana	22	-2.33	0.84	7.11	10.02	-2.62	-2.55	-9.63	-9.72
Maine	23	7.01	13.57	-3.24	-3.84	1.47	-1.74	6.15	6.85
Maryland	24	-5.63	-6.71	-4.71	-5.62	-2.43	1.35	-7.14	-8.46
Massachusetts	25	0.68	-5.13	-5.24	-7.50	2.36	-0.99	11.64	12.30
Michigan	26	-9.26	-9.10	-15.59	-20.02	-16.28	-19.50	-4.40	-4.84
Minnesota	27	-0.64	3.18	-7.29	-8.56	-1.21	-0.83	2.06	4.05
Mississippi	28	-8.23	-9.65	-5.83	-6.31	-12.74	-13.98	-4.65	-6.12
Missouri	29	-12.19	-18.35	-14.01	-19.18	-11.60	-13.49	-1.71	-4.43
Montana	30	-3.45	-3.72	-3.48	-7.91	-3.57	-5.59	-7.09	-10.43
Nebraska	31	-13.64	-19.94	-16.66	-22.63	-10.71	-14.86	-7.98	-11.08
Nevada	32	34.86	65.36	43.60	63.72	25.19	38.67	30.95	63.50
New Hampshire	33	16.47	19.78	5.68	7.31	14.47	13.01	27.90	29.83
New Jersey	34	-3.70	-8.56	-7.80	-12.41	-1.34	-5.63	-0.18	-0.47
New Mexico	35	14.56	15.14	18.40	25.23	11.25	14.61	17.00	19.88
New York	36	-7.51	-12.01	-10.09	-13.48	-8.01	-10.82	-2.98	-2.49
North Carolina	37	2.06	1.99	-0.15	-0.45	5.08	8.31	2.74	0.49
North Dakota	38	-15.26	-21.55	-14.20	-18.32	-14.52	-22.08	-10.74	-15.75
Ohio	39	-10.38	-10.50	-14.95	-19.72	-15.36	-19.09	-9.11	-11.10
Oklahoma	40	4.55	4.00	6.61	7.33	3.69	4.82	7.83	10.31
Oregon	41	-3.69	-4.45	-0.25	-0.36	-7.97	-9.09	-1.73	-0.94
Pennsylvania	42	-10.62	-11.07	-12.50	-16.32	-9.06	-11.07	-11.95	-13.13
Rhode Island	44	-9.17	-21.05	-13.04	-19.84	-3.28	-10.31	-6.16	-17.03
South Carolina	45	3.08	3.64	4.84	6.55	4.97	8.12	-0.17	-2.96
South Dakota	46	-17.36	-25.84	-16.86	-23.50	-10.49	-15.40	-13.27	-19.96
Tennessee	47	-1.03	0.80	-7.60	-9.43	-2.83	-3.15	2.31	2.10
Texas	48	8.41	11.36	12.55	14.77	13.29	14.76	1.97	3.67
Utah	49	20.37	25.84	23.07	28.92	16.19	19.65	20.13	26.25
Vermont	50	6.29	6.40	-1.22	-1.72	5.22	3.08	21.49	24.79
Virginia	51	0.48	-2.58	0.33	1.24	6.55	11.44	1.62	0.24
Washington	53	2.36	5.00	2.47	2.57	-2.27	-2.59	2.95	3.95
West Virginia	54	-9.31	-7.27	-10.80	-13.01	-9.52	-9.29	-11.54	-12.74
Wisconsin	55	-10.84	-12.77	-11.48	-15.37	-10.81	-13.88	-9.66	-9.57
Wyoming	56	0.65	2.24	13.31	14.62	21.99	20.19	-12.97	-16.38

[a]The values (expressed as a percentage) are interpreted as the relative state growth from 1980 to a projected time period compared with the nation. In equation form this is computed as (growth in state demand relative to 1980)/(growth in national demand relative to 1980) - 1.0. This expression is equivalent to the percentage change in state share from 1980: [state share (t) - state share (1980)]/state share (1980).

REFERENCES

1. Hanson, D.A., C.M. Macal, and D.W. South, unpublished information, Argonne National Laboratory (Oct. 1984).

2. Hanson, D.A., D.W. South, and W.H. Oakland, *A Regionalization Methodology For Sector Model Input Data: Derivation and Applications*, Argonne National Laboratory Report ANL/EES-TM-301 (June 1985).

3. Unpublished draft energy projections prepared in conjunction with the National Energy Policy Plan, U.S. Department of Energy, Office of Policy, Planning and Analysis (April 1985).

4. *State Energy Price and Expenditure Data System (SEPEDS): 1981 Update*, U.S. Department of Energy, Energy Information Administration (June 1984).

5. McDonald, J.F., and D.W. South, *Long-term Projections of National, Regional, and State Population*, Argonne National Laboratory Report ANL/EES-TM-304 (Jan. 1985).

6. South, D.W., J.F. McDonald, and W.H. Oakland, *Regional Economic Forecasting Models: Suitability for Use in the National Acid Precipitation Assessment Program*, Argonne National Laboratory Report ANL/EES-TM-305 (June 1985).

7. Boyd, G.A., et al., *Disaggregation of Industrial Fossil Fuel Use in the 1985 National Energy Policy Plan: Methodology and Results*, Argonne National Laboratory Report ANL/EES-TM-303 (Jan. 1986).

8. *1980 Annual Survey of Manufactures, Fuels and Electric Energy Consumed*, U.S. Department of Commerce, Bureau of the Census, Washington, D.C. M80(AS)-4.1 (Aug. 1982).

9. *State Energy Data Report, Consumption Estimates, 1960-1982*, U.S. Department of Energy, Energy Information Administration, DOE/EIA-0214(82) (May 1984).

10. *Electric Power Annual 1984*, U.S. Department of Energy, Energy Information Administration, DOE/EIA-0348(84) (Aug. 1985).

11. Hanson, D.A., et al., unpublished information. Argonne National Laboratory (Sept. 1985).

APPENDIX

NATIONAL AND STATE-LEVEL PROJECTIONS OF ELECTRICITY DEMAND, BY END-USE SECTOR AND SCENARIO

This appendix reports electricity demand projections for three scenarios: reference, low, and high. Section A.1 tabulates results for the reference scenario, while Secs. A.2 and A.3 tabulate results for the low and high scenarios, respectively. For each scenario, four sets of tables are presented:

- Total end use (purchased plus self-generated),
- Industrial use (purchased plus self-generated),
- Residential use, and
- Commercial use.

For each set of tables, the following information is included:

- Electricity demand (10^9 kWh),
- State shares of electricity demand,
- Average annual growth rates (%) in demand, and
- Relative state demand growth from 1980 compared to the nation (%).

The last statistic is computed as (growth in state demand relative to 1980)/(growth in national demand relative to 1980) - 1.0. This expression is equivalent to the percentage change in state share from 1980: [state share (t) - state share (1980)]/state share (1980).

A.1 REFERENCE SCENARIO

RESIDENTIAL ELECTRICITY PROJECTIONS (10**9 KWH) REFERENCE CASE ANL/ARAM/AUSM 3/19/88

		1980	1985	1990	1995	2000	2005	2010	2015	2020	2025	2030
AL	1	16.5	17.5	19.2	20.7	22.4	23.9	26.1	27.6	29.2	30.4	31.6
AK	2	1.1	1.4	1.5	1.7	1.8	2.0	2.1	2.2	2.3	2.4	2.5
AZ	4	9.6	11.5	14.0	16.3	18.9	21.5	24.6	26.1	27.6	28.7	29.9
AR	5	10.2	11.1	12.5	14.0	15.4	16.5	18.2	19.2	20.3	21.2	22.0
CA	6	52.0	59.3	69.1	77.9	87.2	95.5	106.1	112.4	118.8	123.7	128.7
CO	8	6.7	7.8	9.1	10.4	11.8	13.1	14.8	15.7	16.5	17.2	17.9
CT	9	8.2	8.7	9.7	10.6	11.6	12.3	13.5	14.3	15.1	15.7	16.3
DE	10	1.9	2.0	2.2	2.4	2.7	2.9	3.2	3.4	3.6	3.7	3.9
DC	11	1.1	1.1	1.1	1.2	1.3	1.3	1.5	1.5	1.6	1.7	1.8
FL	12	44.7	53.4	64.2	74.9	86.5	98.3	112.7	119.4	126.1	131.4	136.6
GA	13	20.0	22.6	25.8	28.6	31.5	34.4	38.2	40.5	42.7	44.5	46.3
HI	15	1.8	2.1	2.4	2.7	3.0	3.3	3.7	3.9	4.1	4.3	4.5
ID	16	4.9	5.4	6.0	6.6	7.1	7.6	8.2	8.7	9.2	9.6	10.0
IL	17	29.9	31.1	33.7	36.0	38.4	40.4	43.5	46.1	48.7	50.7	52.7
IN	18	19.3	19.9	21.6	23.0	24.4	25.5	27.3	28.9	30.5	31.8	33.0
IA	19	10.0	10.3	10.9	11.5	12.2	12.7	13.5	14.3	15.1	15.8	16.4
KS	20	7.2	7.7	8.5	9.1	9.8	10.4	11.4	12.0	12.7	13.2	13.8
KY	21	13.1	13.8	15.2	16.4	17.7	18.9	20.7	21.9	23.1	24.1	25.1
LA	22	16.8	18.9	21.0	23.8	26.6	29.1	32.4	34.4	36.3	37.8	39.3
ME	23	3.0	3.2	3.6	3.9	4.3	4.6	5.1	5.4	5.7	5.9	6.1
MD	24	12.1	13.0	14.4	15.7	17.1	18.3	20.0	21.2	22.4	23.4	24.3
MA	25	11.6	12.2	13.6	14.9	16.2	17.2	18.8	19.9	21.0	21.9	22.7
MI	26	22.3	22.6	24.7	26.0	27.8	29.0	31.2	33.0	34.9	36.4	37.8
MN	27	11.7	12.4	13.8	14.8	16.1	17.2	18.8	19.9	21.1	21.9	22.8
MS	28	10.0	10.7	11.7	12.7	13.9	14.9	16.4	17.3	18.3	19.1	19.8
MO	29	18.6	19.6	21.2	22.4	23.7	24.6	26.4	28.0	29.6	30.8	32.0
MT	30	2.9	3.2	3.5	3.8	4.2	4.4	4.7	5.0	5.3	5.5	5.7
NE	31	5.5	5.8	6.2	6.5	6.8	7.0	7.5	7.9	8.4	8.7	9.1
NV	32	3.7	4.4	5.5	6.6	7.8	9.1	10.6	11.2	11.9	12.4	12.9
NH	33	2.5	2.7	3.1	3.5	3.9	4.2	4.7	4.9	5.2	5.4	5.6
NJ	34	16.3	17.4	19.2	20.9	22.2	23.3	25.1	26.6	28.0	29.2	30.4
NM	35	2.5	2.8	3.3	3.8	4.3	4.8	5.4	5.7	6.0	6.3	6.5
NY	36	30.6	32.3	35.4	37.9	40.6	42.8	46.4	49.1	51.9	54.0	56.2
NC	37	24.4	26.8	30.1	33.0	36.0	38.7	42.5	45.0	47.6	49.6	51.5
ND	38	2.5	2.6	2.8	2.9	3.1	3.3	3.5	3.7	3.9	4.1	4.3
OH	39	33.5	34.5	37.3	39.6	42.0	43.9	47.1	49.9	52.7	54.9	57.1
OK	40	12.3	14.2	15.7	17.5	19.4	21.0	23.2	24.5	25.9	27.0	28.1
OR	41	13.5	14.3	16.1	18.1	20.0	21.5	23.6	25.1	26.5	27.6	28.7
PA	42	31.8	32.9	35.8	38.5	41.1	43.2	46.6	49.3	52.1	54.3	56.5
RI	44	1.8	1.9	2.1	2.2	2.4	2.4	2.6	2.7	2.9	3.0	3.1
SC	45	12.6	14.0	15.9	17.7	19.5	21.2	23.5	24.9	26.3	27.4	28.5
SD	46	2.6	2.8	2.9	3.1	3.2	3.3	3.5	3.7	3.9	4.1	4.3
TN	47	26.2	28.0	30.8	33.2	35.8	38.1	41.6	44.1	46.5	48.5	50.4
TX	48	57.2	67.1	75.8	85.5	95.1	103.4	115.0	121.8	128.7	134.0	139.4
UT	49	3.1	3.7	4.4	5.0	5.7	6.3	7.0	7.5	7.9	8.2	8.5
VT	50	1.8	1.9	2.2	2.4	2.6	2.8	3.1	3.2	3.4	3.6	3.7
VA	51	19.7	21.7	24.3	26.7	29.2	31.6	35.0	37.1	39.2	40.8	42.4
WA	53	24.4	26.7	29.9	33.5	37.0	39.8	43.9	46.5	49.2	51.2	53.3
WV	54	6.6	6.9	7.6	8.1	8.7	9.2	10.1	10.7	11.3	11.7	12.2
WI	55	13.6	14.3	15.6	16.6	17.8	18.7	20.2	21.4	22.6	23.5	24.4
WY	56	1.4	1.6	1.9	2.1	2.4	2.5	2.8	3.0	3.2	3.3	3.4
US		717.5	783.8	878.0	967.0	1060.0	1142.0	1257.0	1331.9	1406.8	1465.4	1524.0

RESIDENTIAL ELECTRICITY PROJECTIONS - STATE SHARES REFERENCE CASE ANL/ARAM/AUSM 3/19/86

		1980	1985	1990	1995	2000	2005	2010	2015	2020	2025	2030
AL	1	0.0230	0.0223	0.0219	0.0214	0.0212	0.0209	0.0207	0.0207	0.0207	0.0207	0.0207
AK	2	0.0015	0.0018	0.0017	0.0017	0.0017	0.0018	0.0017	0.0017	0.0017	0.0017	0.0017
AZ	4	0.0134	0.0146	0.0159	0.0169	0.0178	0.0188	0.0196	0.0196	0.0196	0.0196	0.0196
AR	5	0.0143	0.0141	0.0142	0.0144	0.0145	0.0145	0.0144	0.0144	0.0144	0.0144	0.0144
CA	6	0.0725	0.0757	0.0787	0.0805	0.0823	0.0836	0.0844	0.0844	0.0844	0.0844	0.0844
CO	8	0.0093	0.0100	0.0104	0.0107	0.0111	0.0115	0.0118	0.0118	0.0118	0.0118	0.0118
CT	9	0.0115	0.0111	0.0110	0.0110	0.0109	0.0108	0.0107	0.0107	0.0107	0.0107	0.0107
DE	10	0.0026	0.0026	0.0025	0.0025	0.0025	0.0025	0.0025	0.0025	0.0025	0.0025	0.0025
DC	11	0.0015	0.0014	0.0013	0.0012	0.0012	0.0012	0.0012	0.0012	0.0012	0.0012	0.0012
FL	12	0.0624	0.0681	0.0731	0.0775	0.0816	0.0861	0.0897	0.0897	0.0897	0.0897	0.0897
GA	13	0.0279	0.0288	0.0293	0.0296	0.0298	0.0301	0.0304	0.0304	0.0304	0.0304	0.0304
HI	15	0.0026	0.0027	0.0027	0.0028	0.0028	0.0029	0.0029	0.0029	0.0029	0.0029	0.0029
ID	16	0.0069	0.0069	0.0068	0.0068	0.0067	0.0066	0.0065	0.0065	0.0065	0.0065	0.0065
IL	17	0.0417	0.0396	0.0333	0.0372	0.0362	0.0354	0.0346	0.0346	0.0346	0.0346	0.0346
IN	18	0.0268	0.0254	0.0246	0.0238	0.0231	0.0223	0.0217	0.0217	0.0217	0.0217	0.0217
IA	19	0.0140	0.0131	0.0125	0.0119	0.0115	0.0111	0.0108	0.0108	0.0108	0.0108	0.0108
KS	20	0.0100	0.0098	0.0096	0.0094	0.0092	0.0091	0.0090	0.0090	0.0090	0.0090	0.0090
KY	21	0.0182	0.0176	0.0173	0.0169	0.0167	0.0166	0.0164	0.0164	0.0164	0.0164	0.0164
LA	22	0.0235	0.0241	0.0239	0.0246	0.0251	0.0255	0.0258	0.0258	0.0258	0.0258	0.0258
ME	23	0.0042	0.0041	0.0041	0.0041	0.0040	0.0040	0.0040	0.0040	0.0040	0.0040	0.0040
MD	24	0.0169	0.0166	0.0165	0.0162	0.0161	0.0160	0.0159	0.0159	0.0159	0.0159	0.0159
MA	25	0.0161	0.0156	0.0154	0.0154	0.0153	0.0151	0.0149	0.0149	0.0149	0.0149	0.0149
MI	26	0.0310	0.0288	0.0281	0.0269	0.0262	0.0254	0.0248	0.0248	0.0248	0.0248	0.0248
MN	27	0.0164	0.0159	0.0157	0.0153	0.0152	0.0151	0.0150	0.0150	0.0150	0.0150	0.0150
MS	28	0.0139	0.0136	0.0133	0.0131	0.0131	0.0130	0.0130	0.0130	0.0130	0.0130	0.0130
MO	29	0.0260	0.0250	0.0241	0.0232	0.0223	0.0216	0.0210	0.0210	0.0210	0.0210	0.0210
MT	30	0.0041	0.0040	0.0040	0.0040	0.0039	0.0038	0.0037	0.0037	0.0037	0.0037	0.0037
NE	31	0.0077	0.0074	0.0071	0.0067	0.0064	0.0062	0.0060	0.0060	0.0060	0.0060	0.0060
NV	32	0.0052	0.0057	0.0063	0.0068	0.0074	0.0080	0.0084	0.0084	0.0084	0.0084	0.0084
NH	33	0.0035	0.0035	0.0036	0.0036	0.0036	0.0037	0.0037	0.0037	0.0037	0.0037	0.0037
NJ	34	0.0228	0.0222	0.0219	0.0216	0.0210	0.0204	0.0199	0.0199	0.0199	0.0199	0.0199
NM	35	0.0034	0.0036	0.0038	0.0039	0.0040	0.0042	0.0043	0.0043	0.0043	0.0043	0.0043
NY	36	0.0426	0.0412	0.0403	0.0392	0.0383	0.0375	0.0369	0.0369	0.0369	0.0369	0.0369
NC	37	0.0340	0.0341	0.0343	0.0341	0.0339	0.0339	0.0338	0.0338	0.0338	0.0338	0.0338
ND	38	0.0034	0.0034	0.0032	0.0030	0.0029	0.0029	0.0028	0.0028	0.0028	0.0028	0.0028
OH	39	0.0466	0.0440	0.0425	0.0410	0.0397	0.0385	0.0374	0.0374	0.0374	0.0374	0.0374
OK	40	0.0172	0.0181	0.0178	0.0181	0.0183	0.0184	0.0184	0.0184	0.0184	0.0184	0.0184
OR	41	0.0189	0.0183	0.0184	0.0188	0.0188	0.0188	0.0188	0.0188	0.0188	0.0188	0.0188
PA	42	0.0443	0.0420	0.0408	0.0398	0.0387	0.0378	0.0370	0.0370	0.0370	0.0370	0.0370
RI	44	0.0026	0.0025	0.0024	0.0023	0.0022	0.0021	0.0021	0.0021	0.0021	0.0021	0.0021
SC	45	0.0175	0.0178	0.0181	0.0183	0.0184	0.0186	0.0187	0.0187	0.0187	0.0187	0.0187
SD	46	0.0037	0.0035	0.0033	0.0032	0.0030	0.0029	0.0028	0.0028	0.0028	0.0028	0.0028
TN	47	0.0365	0.0358	0.0351	0.0343	0.0337	0.0334	0.0331	0.0331	0.0331	0.0331	0.0331
TX	48	0.0797	0.0856	0.0863	0.0884	0.0897	0.0906	0.0915	0.0915	0.0915	0.0915	0.0915
UT	49	0.0043	0.0047	0.0050	0.0052	0.0053	0.0055	0.0056	0.0056	0.0056	0.0056	0.0056
VT	50	0.0025	0.0025	0.0025	0.0025	0.0025	0.0024	0.0024	0.0024	0.0024	0.0024	0.0024
VA	51	0.0275	0.0277	0.0277	0.0276	0.0276	0.0277	0.0278	0.0278	0.0278	0.0278	0.0278
WA	53	0.0341	0.0341	0.0340	0.0347	0.0349	0.0349	0.0349	0.0349	0.0349	0.0349	0.0349
WV	54	0.0092	0.0088	0.0086	0.0084	0.0082	0.0081	0.0080	0.0080	0.0080	0.0080	0.0080
WI	55	0.0190	0.0182	0.0177	0.0172	0.0168	0.0164	0.0160	0.0160	0.0160	0.0160	0.0160
WY	56	0.0020	0.0021	0.0021	0.0022	0.0022	0.0022	0.0023	0.0023	0.0023	0.0023	0.0023
US		1.0000	1.0000	1.0000	1.0000	1.0000	1.0000	1.0000	1.0000	1.0000	1.0000	1.0000

		1980-1985	1985-1990	1990-1995	1995-2000	2000-2005	2005-2010	2010-2015	2015-2020	2020-2025	2025-2030
AL	1	1.22	1.89	1.53	1.59	1.28	1.74	1.16	1.10	0.82	0.79
AK	2	5.31	1.58	1.73	2.08	1.72	0.78	1.16	1.10	0.82	0.79
AZ	4	3.56	3.98	3.18	2.95	2.65	2.74	1.16	1.10	0.82	0.79
AR	5	1.61	2.45	2.24	1.91	1.46	1.93	1.16	1.10	0.82	0.79
CA	6	2.67	3.03	2.43	2.29	1.83	2.14	1.16	1.10	0.82	0.79
CO	8	3.14	3.11	2.63	2.60	2.16	2.41	1.16	1.10	0.82	0.79
CT	9	1.20	2.14	1.82	1.74	1.26	1.79	1.16	1.10	0.82	0.79
DE	10	1.45	2.15	1.89	1.80	1.50	1.97	1.16	1.10	0.82	0.79
DC	11	0.17	0.92	1.03	1.17	0.92	1.66	1.16	1.10	0.82	0.79
FL	12	3.60	3.76	3.12	2.93	2.58	2.78	1.16	1.10	0.82	0.79
GA	13	2.40	2.69	2.11	1.99	1.73	2.13	1.16	1.10	0.82	0.79
HI	15	2.53	2.78	2.33	2.24	1.89	2.24	1.16	1.10	0.82	0.79
ID	16	1.84	2.02	1.99	1.60	1.13	1.70	1.16	1.10	0.82	0.79
IL	17	0.74	1.62	1.33	1.32	1.02	1.49	1.16	1.10	0.82	0.79
IN	18	0.67	1.66	1.27	1.20	0.84	1.34	1.16	1.10	0.82	0.79
IA	19	0.47	1.27	1.06	1.09	0.80	1.33	1.16	1.10	0.82	0.79
KS	20	1.36	1.90	1.44	1.51	1.25	1.75	1.16	1.10	0.82	0.79
KY	21	1.12	1.88	1.54	1.61	1.31	1.78	1.16	1.10	0.82	0.79
LA	22	2.32	2.15	2.52	2.29	1.76	2.22	1.16	1.10	0.82	0.79
ME	23	1.28	2.24	1.92	1.78	1.43	1.88	1.16	1.10	0.82	0.79
MD	24	1.47	2.07	1.69	1.67	1.39	1.86	1.16	1.10	0.82	0.79
MA	25	1.05	2.16	1.84	1.74	1.20	1.75	1.16	1.10	0.82	0.79
MI	26	0.29	1.78	1.07	1.31	0.91	1.44	1.16	1.10	0.82	0.79
MN	27	1.16	2.04	1.48	1.65	1.36	1.79	1.16	1.10	0.82	0.79
MS	28	1.36	1.87	1.66	1.77	1.45	1.89	1.16	1.10	0.82	0.79
MO	29	1.01	1.58	1.12	1.11	0.80	1.38	1.16	1.10	0.82	0.79
MT	30	1.63	2.12	1.85	1.56	0.96	1.53	1.16	1.10	0.82	0.79
NE	31	1.06	1.36	0.81	0.95	0.68	1.25	1.16	1.10	0.82	0.79
NV	32	3.69	4.39	3.75	3.50	2.99	3.13	1.16	1.10	0.82	0.79
NH	33	2.10	2.72	2.16	2.03	1.68	2.07	1.16	1.10	0.82	0.79
NJ	34	1.30	2.02	1.63	1.28	0.92	1.48	1.16	1.10	0.82	0.79
NM	35	2.93	3.10	2.68	2.63	2.17	2.41	1.16	1.10	0.82	0.79
NY	36	1.09	1.84	1.41	1.39	1.06	1.60	1.16	1.10	0.82	0.79
NC	37	1.88	2.37	1.87	1.74	1.47	1.91	1.16	1.10	0.82	0.79
ND	38	1.47	1.26	0.84	1.20	0.95	1.49	1.16	1.10	0.82	0.79
OH	39	0.61	1.59	1.22	1.18	0.88	1.39	1.16	1.10	0.82	0.79
OK	40	2.86	2.03	2.27	2.03	1.59	2.00	1.16	1.10	0.82	0.79
OR	41	1.10	2.43	2.37	1.93	1.49	1.93	1.16	1.10	0.82	0.79
PA	42	0.69	1.73	1.43	1.32	1.00	1.53	1.16	1.10	0.82	0.79
RI	44	0.91	1.72	1.28	1.13	0.60	1.19	1.16	1.10	0.82	0.79
SC	45	2.12	2.62	2.13	1.98	1.69	2.08	1.16	1.10	0.82	0.79
SD	46	1.03	1.17	1.02	0.91	0.59	1.16	1.16	1.10	0.82	0.79
TN	47	1.35	1.92	1.48	1.53	1.28	1.75	1.16	1.10	0.82	0.79
TX	48	3.25	2.46	2.44	2.15	1.70	2.13	1.16	1.10	0.82	0.79
UT	49	3.53	3.59	2.55	2.47	2.04	2.34	1.16	1.10	0.82	0.79
VT	50	1.53	2.31	1.96	1.82	1.45	1.88	1.16	1.10	0.82	0.79
VA	51	1.95	2.27	1.90	1.82	1.59	2.04	1.16	1.10	0.82	0.79
WA	53	1.77	2.29	2.33	1.98	1.49	1.97	1.16	1.10	0.82	0.79
WV	54	0.88	1.84	1.45	1.39	1.22	1.71	1.16	1.10	0.82	0.79
WI	55	0.97	1.77	1.26	1.40	1.01	1.51	1.16	1.10	0.82	0.79
WY	56	2.68	3.07	2.67	2.02	1.55	2.13	1.16	1.10	0.82	0.79
US		1.78	2.29	1.95	1.85	1.50	1.94	1.16	1.10	0.82	0.79

RESIDENTIAL ELECTRICITY PROJECTIONS - SUMMARY TABLE

REFERENCE CASE ANL/ARAM/AUSM 3/19/86

		BASE YEAR VALUE (10**9 KWH)	AVERAGE ANNUAL GROWTH RATES (%)				RELATIVE GROWTH FROM 1980 MEASURED BY CHANGE IN SHARE (%)			
		1980	1980-2000	2000-2010	2010-2030	1980-2030	1990	2000	2010	2030
AL	1	16.47	1.56	1.51	0.97	1.31	-4.66	-7.80	-9.68	-9.68
AK	2	1.09	2.66	1.25	0.97	1.70	14.48	14.52	9.33	9.33
AZ	4	9.64	3.42	2.70	0.97	2.29	18.36	32.54	45.83	45.83
AR	5	10.23	2.05	1.69	0.97	1.55	-0.10	1.61	1.35	1.35
CA	6	52.01	2.62	1.98	0.97	1.83	8.51	13.49	16.46	16.46
CO	8	6.69	2.87	2.28	0.97	1.99	11.19	19.27	26.07	26.07
CT	9	8.22	1.72	1.52	0.97	1.38	-3.57	-4.75	-6.57	-6.57
DE	10	1.87	1.82	1.73	0.97	1.46	-2.33	-2.88	-2.74	-2.74
DC	11	1.09	0.83	1.29	0.97	0.98	-13.73	-20.07	-23.37	-23.37
FL	12	44.75	3.35	2.68	0.97	2.26	17.29	30.89	43.77	43.77
GA	13	20.03	2.30	1.93	0.97	1.69	5.06	6.59	8.79	8.79
HI	15	1.84	2.47	2.06	0.97	1.78	6.18	10.24	14.02	14.02
ID	16	4.94	1.87	1.41	0.97	1.41	-1.03	-2.05	-4.98	-4.98
IL	17	29.93	1.25	1.25	0.97	1.14	-8.08	-13.14	-17.04	-17.04
IN	18	19.26	1.20	1.09	0.97	1.09	-8.27	-14.10	-19.25	-19.25
IA	19	10.04	0.97	1.06	0.97	0.99	-10.92	-17.88	-23.04	-23.04
KS	20	7.19	1.55	1.50	0.97	1.31	-3.93	-7.87	-9.83	-9.83
KY	21	13.08	1.54	1.55	0.97	1.31	-5.18	-8.18	-9.74	-9.74
LA	22	16.83	2.32	1.99	0.97	1.71	1.95	7.11	10.02	10.02
ME	23	3.00	1.80	1.66	0.97	1.44	-2.72	-3.24	-3.84	-3.84
MD	24	12.12	1.72	1.62	0.97	1.40	-2.60	-4.71	-5.62	-5.62
MA	25	11.57	1.70	1.47	0.97	1.36	-4.20	-5.24	-7.50	-7.50
MI	26	22.26	1.11	1.17	0.97	1.07	-9.45	-15.59	-20.02	-20.02
MN	27	11.75	1.59	1.58	0.97	1.34	-4.19	-7.29	-8.56	-8.56
MS	28	9.96	1.66	1.67	0.97	1.39	-4.11	-5.83	-6.31	-6.31
MO	29	18.65	1.20	1.09	0.97	1.09	-7.08	-14.01	-19.18	-19.18
MT	30	2.92	1.79	1.24	0.97	1.35	-1.60	-3.48	-7.91	-7.91
NE	31	5.52	1.05	0.97	0.97	1.00	-7.84	-16.66	-22.63	-22.63
NV	32	3.70	3.83	3.06	0.97	2.52	21.44	43.60	63.72	63.72
NH	33	2.48	2.25	1.88	0.97	1.66	3.70	5.68	7.31	7.31
NJ	34	16.33	1.56	1.20	0.97	1.25	-3.66	-7.80	-12.41	-12.41
NM	35	2.45	2.83	2.29	0.97	1.98	10.02	18.40	25.23	25.23
NY	36	30.58	1.43	1.33	0.97	1.22	-5.52	-10.09	-13.48	-13.48
NC	37	24.38	1.96	1.69	0.97	1.51	0.81	-0.15	-0.45	-0.45
ND	38	2.46	1.19	1.22	0.97	1.11	-6.44	-14.20	-18.32	-18.32
OH	39	33.46	1.15	1.13	0.97	1.07	-8.85	-14.95	-19.72	-19.72
OK	40	12.31	2.30	1.79	0.97	1.66	4.05	6.61	7.38	7.38
OR	41	13.55	1.96	1.71	0.97	1.51	-2.66	-0.25	-0.36	-0.36
PA	42	31.77	1.29	1.27	0.97	1.16	-7.84	-12.50	-16.32	-16.32
RI	44	1.84	1.26	0.89	0.97	1.07	-6.86	-13.04	-19.84	-19.84
SC	45	12.58	2.21	1.88	0.97	1.65	3.28	4.84	6.55	6.55
SD	46	2.62	1.03	0.88	0.97	0.98	-8.83	-16.86	-23.50	-23.50
TN	47	26.21	1.57	1.52	0.97	1.32	-3.92	-7.60	-9.43	-9.43
TX	48	57.18	2.57	1.92	0.97	1.80	8.31	12.55	14.77	14.77
UT	49	3.12	3.03	2.19	0.97	2.04	15.96	23.07	28.92	28.92
VT	50	1.78	1.91	1.67	0.97	1.48	-1.15	-1.22	-1.72	-1.72
VA	51	19.73	1.99	1.81	0.97	1.54	0.71	0.33	1.24	1.24
WA	53	24.45	2.09	1.73	0.97	1.57	-0.07	2.47	2.57	2.57
WV	54	6.61	1.39	1.46	0.97	1.24	-6.47	-10.80	-13.01	-13.01
WI	55	13.60	1.35	1.26	0.97	1.18	-6.36	-11.48	-15.37	-15.37
WY	56	1.41	2.61	1.84	0.97	1.80	8.53	13.31	14.62	14.62
US		717.50	1.97	1.72	0.97	1.52				

COMMERCIAL ELECTRICITY PROJECTIONS (10**9 KWH) REFERENCE CASE ANL/ARAM/AUSH 3/19/86

		1980	1985	1990	1995	2000	2005	2010	2015	2020	2025	2030
AL	1	7.2	8.5	8.6	9.5	10.4	11.1	11.8	12.1	12.5	12.8	13.1
AK	2	0.7	1.1	1.0	1.2	1.3	1.5	1.5	1.5	1.6	1.6	1.6
AZ	4	9.1	12.5	14.0	16.4	18.7	20.5	22.5	23.1	23.6	24.3	24.9
AR	5	5.3	6.6	6.9	7.8	8.5	8.9	9.5	9.8	10.0	10.3	10.5
CA	6	63.4	80.6	88.1	101.3	113.1	121.7	131.7	135.2	138.7	142.4	146.2
CO	8	7.2	9.5	10.4	11.9	13.2	14.1	15.3	15.7	16.1	16.5	16.9
CT	9	7.0	8.9	9.6	11.1	12.0	12.5	13.2	13.6	13.9	14.3	14.7
DE	10	1.5	1.9	2.0	2.3	2.5	2.6	2.9	2.9	3.0	3.1	3.2
DC	11	2.6	2.9	3.0	3.3	3.6	3.8	4.1	4.2	4.3	4.4	4.5
FL	12	27.3	37.9	40.8	46.5	51.8	56.6	62.2	63.8	65.5	67.2	69.0
GA	13	12.0	16.0	17.1	19.2	21.3	23.0	25.1	25.8	26.4	27.2	27.9
HI	15	1.5	1.8	1.9	2.1	2.3	2.5	2.6	2.7	2.8	2.9	2.9
ID	16	4.0	4.6	4.7	5.3	5.7	5.9	6.3	6.5	6.6	6.8	7.0
IL	17	31.6	36.8	38.1	41.4	44.4	46.1	48.6	49.9	51.2	52.6	53.9
IN	18	10.4	12.0	12.4	13.7	14.7	15.2	16.0	16.4	16.8	17.3	17.7
IA	19	5.5	6.4	6.5	7.2	7.8	8.3	8.8	9.1	9.3	9.5	9.8
KS	20	6.8	8.3	8.7	9.8	10.8	11.6	12.6	13.0	13.3	13.7	14.0
KY	21	8.4	9.9	10.1	11.1	12.2	12.9	13.9	14.2	14.6	15.0	15.4
LA	22	12.7	15.5	16.0	18.1	19.9	21.1	22.7	23.3	23.9	24.6	25.2
ME	23	1.7	2.1	2.3	2.6	2.8	2.9	3.1	3.2	3.3	3.3	3.4
MD	24	9.4	11.5	12.0	13.3	14.8	16.0	17.5	18.0	18.5	19.0	19.5
MA	25	13.2	16.2	17.3	20.0	21.8	22.7	24.0	24.7	25.3	26.0	26.7
MI	26	16.7	19.1	19.4	21.0	22.6	23.5	24.8	25.4	26.1	26.8	27.5
MN	27	5.7	7.1	7.4	8.3	9.1	9.7	10.4	10.7	11.0	11.2	11.5
MS	28	5.1	6.0	6.0	6.5	7.2	7.6	8.1	8.3	8.5	8.7	8.9
MO	29	12.9	15.1	15.5	17.1	18.5	19.4	20.6	21.2	21.7	22.3	22.9
MT	30	2.1	2.5	2.6	2.9	3.3	3.4	3.6	3.7	3.8	3.9	4.0
NE	31	4.0	5.0	5.1	5.5	5.8	6.0	6.3	6.5	6.7	6.9	7.0
NV	32	1.8	2.3	2.6	3.1	3.6	4.0	4.5	4.6	4.7	4.9	5.0
NH	33	1.1	1.5	1.6	1.9	2.0	2.2	2.3	2.4	2.4	2.5	2.6
NJ	34	16.9	22.2	23.1	25.2	26.9	27.9	29.4	30.2	30.9	31.8	32.6
NM	35	3.4	4.4	4.7	5.4	6.0	6.5	7.1	7.3	7.5	7.7	7.9
NY	36	42.2	52.5	53.9	58.5	62.7	65.4	69.4	71.2	73.1	75.0	77.0
NC	37	14.2	18.1	19.3	21.7	24.1	26.1	28.4	29.1	29.9	30.7	31.5
ND	38	1.1	1.4	1.4	1.5	1.6	1.6	1.6	1.7	1.7	1.8	1.8
OH	39	23.2	27.1	27.4	29.7	31.7	32.9	34.6	35.5	36.4	37.4	38.4
OK	40	8.9	11.6	11.9	13.5	14.9	16.0	17.2	17.7	18.1	18.6	19.1
OR	41	10.4	11.9	12.3	14.1	15.5	16.4	17.5	17.9	18.4	18.9	19.4
PA	42	21.9	26.1	27.0	29.8	32.1	33.7	35.8	36.8	37.7	38.7	39.8
RI	44	1.9	2.3	2.4	2.8	2.9	3.0	3.1	3.2	3.3	3.4	3.5
SC	45	8.7	11.0	11.7	13.2	14.7	15.9	17.3	17.7	18.2	18.7	19.2
SD	46	1.1	1.4	1.4	1.5	1.6	1.7	1.8	1.8	1.9	1.9	2.0
TN	47	14.2	17.9	18.4	20.3	22.3	23.6	25.3	26.0	26.6	27.4	28.1
TX	48	43.9	58.8	62.5	72.1	80.3	85.9	92.8	95.3	97.7	100.3	103.0
UT	49	3.1	4.1	4.6	5.2	5.8	6.3	6.9	7.0	7.2	7.4	7.6
VT	50	0.9	1.2	1.2	1.4	1.6	1.6	1.7	1.8	1.8	1.9	1.9
VA	51	16.8	21.5	23.1	26.0	28.9	31.4	34.5	35.4	36.3	37.3	38.2
WA	53	13.7	16.8	16.9	19.5	21.7	23.0	24.6	25.3	25.9	26.6	27.3
WV	54	3.7	4.3	4.4	4.9	5.3	5.7	6.1	6.3	6.4	6.6	6.8
WI	55	10.0	12.1	12.2	13.4	14.4	15.0	15.8	16.3	16.7	17.1	17.6
WY	56	1.1	1.5	1.7	2.0	2.2	2.3	2.5	2.6	2.6	2.7	2.8
US		558.8	698.0	733.0	823.0	903.0	959.0	1030.0	1057.2	1084.4	1113.7	1143.0

COMMERCIAL ELECTRICITY PROJECTIONS - STATE SHARES

REFERENCE CASE ANL/ARAM/AUSM 3/19/86

		1980	1985	1990	1995	2000	2005	2010	2015	2020	2025	2030
AL	1	0.0128	0.0121	0.0117	0.0115	0.0115	0.0115	0.0115	0.0115	0.0115	0.0115	0.0115
AK	2	0.0013	0.0015	0.0014	0.0015	0.0015	0.0015	0.0014	0.0014	0.0014	0.0014	0.0014
AZ	4	0.0162	0.0179	0.0191	0.0199	0.0207	0.0214	0.0218	0.0218	0.0218	0.0218	0.0218
AR	5	0.0095	0.0095	0.0094	0.0094	0.0094	0.0093	0.0092	0.0092	0.0092	0.0092	0.0092
CA	6	0.1134	0.1154	0.1202	0.1230	0.1252	0.1269	0.1279	0.1279	0.1279	0.1279	0.1279
CO	8	0.0130	0.0136	0.0142	0.0144	0.0146	0.0147	0.0148	0.0148	0.0148	0.0148	0.0148
CT	9	0.0126	0.0128	0.0131	0.0135	0.0133	0.0130	0.0128	0.0128	0.0128	0.0128	0.0128
DE	10	0.0027	0.0028	0.0028	0.0028	0.0028	0.0028	0.0028	0.0028	0.0028	0.0028	0.0028
DC	11	0.0046	0.0042	0.0041	0.0040	0.0040	0.0040	0.0040	0.0040	0.0040	0.0040	0.0040
FL	12	0.0488	0.0543	0.0556	0.0565	0.0574	0.0590	0.0604	0.0604	0.0604	0.0604	0.0604
GA	13	0.0214	0.0229	0.0233	0.0233	0.0236	0.0240	0.0244	0.0244	0.0244	0.0244	0.0244
HI	15	0.0026	0.0026	0.0026	0.0026	0.0026	0.0026	0.0026	0.0026	0.0026	0.0026	0.0026
ID	16	0.0071	0.0066	0.0064	0.0064	0.0063	0.0062	0.0061	0.0061	0.0061	0.0061	0.0061
IL	17	0.0565	0.0528	0.0519	0.0503	0.0491	0.0481	0.0472	0.0472	0.0472	0.0472	0.0472
IN	18	0.0186	0.0172	0.0170	0.0166	0.0163	0.0158	0.0155	0.0155	0.0155	0.0155	0.0155
IA	19	0.0093	0.0092	0.0088	0.0087	0.0087	0.0086	0.0086	0.0086	0.0086	0.0086	0.0086
KS	20	0.0121	0.0118	0.0119	0.0119	0.0120	0.0121	0.0123	0.0123	0.0123	0.0123	0.0123
KY	21	0.0149	0.0141	0.0138	0.0135	0.0135	0.0135	0.0135	0.0135	0.0135	0.0135	0.0135
LA	22	0.0226	0.0222	0.0218	0.0220	0.0220	0.0220	0.0221	0.0221	0.0221	0.0221	0.0221
ME	23	0.0031	0.0031	0.0031	0.0032	0.0031	0.0030	0.0030	0.0030	0.0030	0.0030	0.0030
MD	24	0.0168	0.0164	0.0163	0.0162	0.0164	0.0167	0.0170	0.0170	0.0170	0.0170	0.0170
MA	25	0.0236	0.0232	0.0236	0.0243	0.0241	0.0236	0.0233	0.0233	0.0233	0.0233	0.0233
MI	26	0.0299	0.0274	0.0264	0.0256	0.0250	0.0245	0.0241	0.0241	0.0241	0.0241	0.0241
MN	27	0.0102	0.0101	0.0101	0.0101	0.0101	0.0101	0.0101	0.0101	0.0101	0.0101	0.0101
MS	28	0.0091	0.0085	0.0082	0.0079	0.0079	0.0079	0.0078	0.0078	0.0078	0.0078	0.0078
MO	29	0.0232	0.0217	0.0211	0.0208	0.0205	0.0202	0.0200	0.0200	0.0200	0.0200	0.0200
MT	30	0.0037	0.0036	0.0035	0.0036	0.0036	0.0036	0.0035	0.0035	0.0035	0.0035	0.0035
NE	31	0.0072	0.0072	0.0069	0.0067	0.0065	0.0063	0.0062	0.0062	0.0062	0.0062	0.0062
NV	32	0.0032	0.0033	0.0035	0.0037	0.0040	0.0042	0.0044	0.0044	0.0044	0.0044	0.0044
NH	33	0.0020	0.0021	0.0022	0.0023	0.0023	0.0022	0.0022	0.0022	0.0022	0.0022	0.0022
NJ	34	0.0302	0.0318	0.0316	0.0306	0.0298	0.0290	0.0285	0.0285	0.0285	0.0285	0.0285
NM	35	0.0060	0.0062	0.0064	0.0066	0.0067	0.0068	0.0069	0.0069	0.0069	0.0069	0.0069
NY	36	0.0755	0.0752	0.0736	0.0711	0.0695	0.0682	0.0674	0.0674	0.0674	0.0674	0.0674
NC	37	0.0254	0.0260	0.0263	0.0264	0.0267	0.0272	0.0275	0.0275	0.0275	0.0275	0.0275
ND	38	0.0020	0.0020	0.0019	0.0018	0.0017	0.0016	0.0016	0.0016	0.0016	0.0016	0.0016
OH	39	0.0415	0.0388	0.0374	0.0361	0.0351	0.0343	0.0336	0.0336	0.0336	0.0336	0.0336
OK	40	0.0160	0.0166	0.0162	0.0165	0.0166	0.0167	0.0167	0.0167	0.0167	0.0167	0.0167
OR	41	0.0187	0.0170	0.0167	0.0171	0.0172	0.0171	0.0170	0.0170	0.0170	0.0170	0.0170
PA	42	0.0391	0.0374	0.0368	0.0362	0.0356	0.0351	0.0348	0.0348	0.0348	0.0348	0.0348
RI	44	0.0034	0.0033	0.0033	0.0034	0.0033	0.0031	0.0030	0.0030	0.0030	0.0030	0.0030
SC	45	0.0155	0.0158	0.0160	0.0161	0.0163	0.0166	0.0168	0.0168	0.0168	0.0168	0.0168
SD	46	0.0020	0.0019	0.0019	0.0019	0.0018	0.0018	0.0017	0.0017	0.0017	0.0017	0.0017
TN	47	0.0254	0.0256	0.0250	0.0246	0.0246	0.0246	0.0246	0.0246	0.0246	0.0246	0.0246
TX	48	0.0785	0.0842	0.0853	0.0876	0.0889	0.0896	0.0901	0.0901	0.0901	0.0901	0.0901
UT	49	0.0056	0.0059	0.0062	0.0064	0.0065	0.0066	0.0067	0.0067	0.0067	0.0067	0.0067
VT	50	0.0016	0.0017	0.0017	0.0017	0.0017	0.0017	0.0017	0.0017	0.0017	0.0017	0.0017
VA	51	0.0300	0.0308	0.0315	0.0316	0.0320	0.0327	0.0335	0.0335	0.0335	0.0335	0.0335
WA	53	0.0245	0.0240	0.0231	0.0237	0.0240	0.0240	0.0239	0.0239	0.0239	0.0239	0.0239
WV	54	0.0065	0.0062	0.0061	0.0060	0.0059	0.0059	0.0059	0.0059	0.0059	0.0059	0.0059
WI	55	0.0179	0.0173	0.0167	0.0162	0.0159	0.0156	0.0154	0.0154	0.0154	0.0154	0.0154
WY	56	0.0020	0.0021	0.0023	0.0025	0.0025	0.0024	0.0024	0.0024	0.0024	0.0024	0.0024
US		1.0000	1.0000	1.0000	1.0000	1.0000	1.0000	1.0000	1.0000	1.0000	1.0000	1.0000

COMMERCIAL ELECTRICITY PROJECTIONS - AVERAGE ANNUAL GROWTH RATES (%) REFERENCE CASE ANL/AKAM/AUSM 3/19/88

		1980-1985	1985-1990	1990-1995	1995-2000	2000-2005	2005-2010	2010-2015	2015-2020	2020-2025	2025-2030
AL	1	3.37	0.34	1.94	1.92	1.17	1.38	0.52	0.51	0.53	0.52
AK	2	7.85	-0.33	3.13	1.93	1.77	0.22	0.52	0.51	0.53	0.52
AZ	4	6.62	2.36	3.18	2.62	1.90	1.84	0.52	0.51	0.53	0.52
AR	5	4.64	0.67	2.49	1.74	1.01	1.31	0.52	0.51	0.53	0.52
CA	6	4.92	1.80	2.82	2.23	1.49	1.59	0.52	0.51	0.53	0.52
CO	8	5.62	1.81	2.64	2.09	1.43	1.57	0.52	0.51	0.53	0.52
CT	9	4.85	1.46	3.03	1.53	0.79	1.13	0.52	0.51	0.53	0.52
DE	10	5.05	1.00	2.27	1.83	1.26	1.47	0.52	0.51	0.53	0.52
DC	11	2.63	0.79	1.87	1.56	1.14	1.54	0.52	0.51	0.53	0.52
FL	12	6.78	1.47	2.65	2.21	1.76	1.91	0.52	0.51	0.53	0.52
GA	13	6.01	1.32	2.35	2.10	1.58	1.75	0.52	0.51	0.53	0.52
HI	15	4.18	1.08	2.20	1.81	1.26	1.46	0.52	0.51	0.53	0.52
ID	16	3.17	0.15	2.41	1.67	0.74	1.16	0.52	0.51	0.53	0.52
IL	17	3.11	0.67	1.69	1.39	0.77	1.07	0.52	0.51	0.53	0.52
IN	18	2.97	0.64	1.91	1.45	0.69	0.98	0.52	0.51	0.53	0.52
IA	19	3.19	0.21	2.08	1.72	1.13	1.32	0.52	0.51	0.53	0.52
KS	20	4.04	1.00	2.37	2.01	1.49	1.69	0.52	0.51	0.53	0.52
KY	21	3.38	0.47	1.97	1.88	1.17	1.39	0.52	0.51	0.53	0.52
LA	22	4.15	0.58	2.58	1.90	1.16	1.50	0.52	0.51	0.53	0.52
ME	23	4.57	1.10	2.85	1.53	0.81	1.19	0.52	0.51	0.53	0.52
MD	24	4.06	0.88	2.17	2.12	1.62	1.80	0.52	0.51	0.53	0.52
MA	25	4.24	1.28	2.96	1.74	0.79	1.19	0.52	0.51	0.53	0.52
MI	26	2.73	0.28	1.65	1.44	0.80	1.05	0.52	0.51	0.53	0.52
MN	27	4.48	0.86	2.31	1.85	1.28	1.45	0.52	0.51	0.53	0.52
MS	28	3.24	0.10	1.78	1.84	1.06	1.30	0.52	0.51	0.53	0.52
MO	29	3.15	0.49	2.01	1.56	0.98	1.24	0.52	0.51	0.53	0.52
MT	30	3.49	0.79	2.64	2.03	0.93	1.30	0.52	0.51	0.53	0.52
NE	31	4.36	0.17	1.66	1.25	0.69	1.00	0.52	0.51	0.53	0.52
NV	32	5.46	2.42	3.50	2.97	2.33	2.41	0.52	0.51	0.53	0.52
NH	33	6.06	1.71	3.14	1.65	1.03	1.36	0.52	0.51	0.53	0.52
NJ	34	5.64	0.81	1.71	1.34	0.68	1.07	0.52	0.51	0.53	0.52
NM	35	5.34	1.54	2.81	2.26	1.59	1.66	0.52	0.51	0.53	0.52
NY	36	4.46	0.54	1.64	1.42	0.84	1.19	0.52	0.51	0.53	0.52
NC	37	5.00	1.24	2.38	2.15	1.57	1.70	0.52	0.51	0.53	0.52
ND	38	3.76	0.32	1.39	1.08	0.13	0.65	0.52	0.51	0.53	0.52
OH	39	3.15	0.23	1.63	1.32	0.71	1.03	0.52	0.51	0.53	0.52
OK	40	5.31	0.55	2.65	2.00	1.35	1.52	0.52	0.51	0.53	0.52
OR	41	2.65	0.60	2.81	1.97	1.06	1.34	0.52	0.51	0.53	0.52
PA	42	3.62	0.64	1.99	1.54	0.96	1.24	0.52	0.51	0.53	0.52
RI	44	4.20	0.99	2.56	1.32	0.34	0.78	0.52	0.51	0.53	0.52
SC	45	4.95	1.21	2.47	2.12	1.56	1.69	0.52	0.51	0.53	0.52
SD	46	3.63	0.47	2.12	1.26	0.63	0.88	0.52	0.51	0.53	0.52
TN	47	4.75	0.52	2.01	1.89	1.18	1.40	0.52	0.51	0.53	0.52
TX	48	6.03	1.24	2.87	2.19	1.35	1.56	0.52	0.51	0.53	0.52
UT	49	5.60	2.20	2.82	2.23	1.57	1.68	0.52	0.51	0.53	0.52
VT	50	4.69	1.32	3.11	1.67	0.95	1.29	0.52	0.51	0.53	0.52
VA	51	5.06	1.48	2.40	2.12	1.68	1.88	0.52	0.51	0.53	0.52
WA	53	4.11	0.20	2.90	2.08	1.21	1.37	0.52	0.51	0.53	0.52
WV	54	3.30	0.69	2.14	1.55	1.21	1.49	0.52	0.51	0.53	0.52
WI	55	3.88	0.26	1.80	1.47	0.83	1.11	0.52	0.51	0.53	0.52
WY	56	5.59	2.91	3.40	1.94	0.84	1.51	0.52	0.51	0.53	0.52
US		4.55	0.98	2.34	1.87	1.21	1.44	0.52	0.51	0.53	0.52

COMMERCIAL ELECTRICITY PROJECTIONS - SUMMARY TABLE

REFERENCE CASE ANL/ARAM/AUSM 3/19/86

		BASE YEAR VALUE (10**9 KWH)	AVERAGE ANNUAL GROWTH RATES (%)				RELATIVE GROWTH FROM 1980 MEASURED BY CHANGE IN SHARE (%)			
		1980	1980-2000	2000-2010	2010-2030	1980-2030	1990	2000	2010	2030
AL	1	7.17	1.89	1.28	0.52	1.22	-8.49	-10.05	-10.47	-10.47
AK	2	0.73	3.10	1.00	0.52	1.64	9.42	14.01	10.36	10.36
AZ	4	9.06	3.68	1.87	0.52	2.04	18.01	27.47	34.47	34.47
AR	5	5.30	2.37	1.16	0.52	1.39	-1.15	-1.07	-2.66	-2.66
CA	6	63.36	2.94	1.54	0.52	1.69	6.01	10.43	12.78	12.78
CO	8	7.25	3.03	1.50	0.52	1.71	9.60	12.35	14.30	14.30
CT	9	7.03	2.71	0.99	0.52	1.48	3.86	5.60	2.11	2.11
DE	10	1.51	2.52	1.37	0.52	1.49	2.47	1.90	2.32	2.32
DC	11	2.55	1.71	1.34	0.52	1.16	-9.73	-13.16	-13.04	-13.04
FL	12	27.30	3.26	1.84	0.52	1.87	13.86	17.49	23.56	23.56
GA	13	11.95	2.93	1.66	0.52	1.71	8.96	10.22	13.98	13.98
HI	15	1.46	2.31	1.36	0.52	1.40	-1.25	-2.24	-1.89	-1.89
ID	16	3.97	1.84	0.95	0.52	1.14	-10.21	-10.80	-14.03	-14.03
IL	17	31.60	1.71	0.92	0.52	1.08	-8.14	-13.12	-16.54	-16.54
IN	18	10.40	1.74	0.84	0.52	1.07	-8.87	-12.61	-16.73	-16.73
IA	19	5.48	1.79	1.22	0.52	1.17	-9.88	-11.70	-12.57	-12.57
KS	20	6.78	2.35	1.59	0.52	1.46	-2.33	-1.53	1.08	1.08
KY	21	8.35	1.92	1.28	0.52	1.23	-7.84	-9.47	-9.86	-9.86
LA	22	12.65	2.29	1.33	0.52	1.39	-3.83	-2.62	-2.55	-2.55
ME	23	1.71	2.50	1.00	0.52	1.41	0.70	1.47	-1.74	-1.74
MD	24	9.39	2.30	1.71	0.52	1.47	-2.83	-2.43	1.35	1.35
MA	25	13.17	2.55	0.99	0.52	1.42	-0.03	2.36	-0.99	-0.99
MI	26	16.70	1.52	0.93	0.52	1.00	-11.53	-16.28	-19.50	-19.50
MN	27	5.69	2.37	1.36	0.52	1.42	-0.95	-1.21	-0.83	-0.83
MS	28	5.03	1.73	1.18	0.52	1.14	-10.15	-12.74	-13.98	-13.98
MO	29	12.94	1.80	1.11	0.52	1.15	-8.77	-11.60	-13.49	-13.49
MT	30	2.09	2.24	1.11	0.52	1.32	-5.90	-3.57	-5.59	-5.59
NE	31	4.05	1.85	0.84	0.52	1.12	-4.84	-10.71	-14.86	-14.86
NV	32	1.76	3.59	2.37	0.52	2.11	12.12	25.19	38.67	38.67
NH	33	1.11	3.12	1.19	0.52	1.69	11.36	14.47	13.01	13.01
NJ	34	16.89	2.36	0.87	0.52	1.32	4.44	-1.34	-5.63	-5.63
NM	35	3.35	2.98	1.63	0.52	1.72	6.73	11.25	14.61	14.61
NY	36	42.21	2.00	1.01	0.52	1.21	-2.61	-8.01	-10.82	-10.82
NC	37	14.21	2.68	1.63	0.52	1.60	3.48	5.08	8.31	8.31
ND	38	1.13	1.63	0.39	0.52	0.94	-6.84	-14.52	-22.08	-22.08
OH	39	23.21	1.58	0.87	0.52	1.01	-9.95	-15.36	-19.09	-19.09
OK	40	8.92	2.61	1.44	0.52	1.54	1.49	3.69	4.82	4.82
OR	41	10.43	2.00	1.20	0.52	1.25	-10.45	-7.97	-9.09	-9.09
PA	42	21.86	1.94	1.10	0.52	1.20	-5.96	-9.06	-11.07	-11.07
RI	44	1.28	2.26	0.56	0.52	1.22	-1.65	-3.28	-10.31	-10.31
SC	45	8.67	2.63	1.62	0.52	1.60	3.08	4.97	8.12	8.12
SD	46	1.13	1.86	0.76	0.52	1.10	-6.73	-10.49	-15.40	-15.40
TN	47	14.13	2.28	1.29	0.52	1.38	-1.30	-2.83	-3.15	-3.15
TX	48	43.87	3.07	1.46	0.52	1.72	8.67	13.29	14.76	14.76
UT	49	3.11	3.20	1.62	0.52	1.81	11.59	16.19	19.65	19.65
VT	50	0.92	2.69	1.12	0.52	1.50	2.37	5.22	3.08	3.08
VA	51	16.78	2.75	1.78	0.52	1.66	4.98	6.55	11.44	11.44
WA	53	13.71	2.31	1.29	0.52	1.39	-5.82	-2.27	-2.59	-2.59
WV	54	3.65	1.92	1.35	0.52	1.24	-7.18	-9.52	-9.29	-9.29
WI	55	9.98	1.84	0.97	0.52	1.14	-6.58	-10.81	-13.88	-13.88
WY	56	1.13	3.45	1.17	0.52	1.82	15.49	21.99	20.19	20.19
US		558.79	2.43	1.32	0.52	1.44				

MANUFACTURING ELECTRICITY PROJECTIONS (10**9 KWH) REFERENCE CASE ANL/ARAM/AUSM 3/19/86

		1980	1985	1990	1995	2000	2005	2010	2015	2020	2025	2030
AL	1	25.9	29.2	38.8	45.2	51.3	58.5	67.4	72.8	78.2	84.6	91.0
AK	2	0.8	0.8	1.1	1.3	1.4	1.6	1.8	1.9	2.1	2.2	2.4
AZ	4	3.7	4.8	6.5	7.8	9.2	10.7	12.4	13.4	14.3	15.5	16.7
AR	5	10.0	11.3	15.3	18.2	20.6	23.3	26.7	28.9	31.0	33.6	36.1
CA	6	38.8	45.1	60.0	71.4	82.5	95.4	110.1	118.9	127.7	138.2	148.6
CO	8	3.8	4.6	6.3	7.7	9.1	10.8	12.8	13.8	14.8	16.0	17.2
CT	9	6.0	6.4	8.2	9.9	11.6	13.3	15.5	16.7	18.0	19.5	20.9
DE	10	2.5	2.8	3.5	4.2	4.8	5.4	6.2	6.7	7.2	7.8	8.3
DC	11	0.1	0.1	0.2	0.2	0.2	0.3	0.3	0.3	0.3	0.4	0.4
FL	12	12.9	16.2	22.0	26.7	30.8	35.5	41.1	44.4	47.7	51.6	55.5
GA	13	18.0	20.8	26.4	30.3	34.0	38.2	43.4	46.9	50.4	54.5	58.6
HI	15	0.8	0.9	1.1	1.3	1.5	1.7	1.9	2.0	2.2	2.4	2.5
ID	16	5.0	5.7	7.5	9.0	10.0	11.3	12.8	13.9	14.9	16.1	17.3
IL	17	31.3	29.4	37.2	42.6	47.9	54.5	62.5	67.5	72.5	78.4	84.4
IN	18	28.7	30.9	39.3	46.0	51.8	58.5	66.9	72.2	77.6	84.0	90.3
IA	19	7.7	7.4	9.3	10.6	11.8	13.2	14.9	16.1	17.3	18.7	20.2
KS	20	5.5	5.8	7.6	9.1	10.5	12.2	14.4	15.5	16.7	18.0	19.4
KY	21	26.8	28.2	36.8	43.2	49.5	57.0	66.1	71.3	76.6	82.9	89.2
LA	22	33.7	32.2	42.2	49.6	56.0	63.7	73.6	79.5	85.4	92.4	99.5
ME	23	7.1	7.8	10.4	12.2	14.0	16.1	18.6	20.1	21.6	23.4	25.2
MD	24	8.8	9.1	11.0	12.5	14.2	16.2	18.6	20.0	21.5	23.3	25.1
MA	25	8.3	9.1	12.2	14.8	16.7	19.2	22.0	23.8	25.6	27.7	29.8
MI	26	27.2	29.7	35.7	41.1	46.9	54.2	63.0	68.1	73.1	79.1	85.1
MN	27	7.2	8.3	10.9	13.0	14.9	17.2	20.1	21.7	23.3	25.2	27.1
MS	28	6.1	6.8	9.0	10.5	11.8	13.4	15.4	16.6	17.8	19.3	20.7
MO	29	11.1	12.4	15.6	17.9	20.0	22.6	25.6	27.7	29.7	32.2	34.6
MT	30	4.4	4.3	5.7	6.8	7.7	8.7	10.0	10.7	11.5	12.5	13.4
NE	31	2.7	3.0	3.8	4.4	5.0	5.6	6.4	6.9	7.4	8.0	8.6
NV	32	1.0	1.2	1.7	2.0	2.4	2.8	3.3	3.5	3.8	4.1	4.4
NH	33	1.6	1.9	2.6	3.2	3.9	4.7	5.6	6.1	6.5	7.0	7.6
NJ	34	14.8	15.8	19.9	23.2	26.4	30.3	35.0	37.8	40.6	43.9	47.2
NM	35	0.8	1.0	1.3	1.6	1.8	2.2	2.5	2.7	2.9	3.2	3.4
NY	36	31.4	32.4	41.0	47.2	53.3	61.2	70.6	76.2	81.9	88.6	95.3
NC	37	25.8	29.2	37.9	43.6	49.0	55.3	63.2	68.3	73.3	79.4	85.4
ND	38	0.7	0.9	1.1	1.3	1.5	1.6	1.9	2.0	2.2	2.4	2.5
OH	39	51.5	52.9	66.2	76.7	86.2	97.8	112.2	121.2	130.2	140.9	151.5
OK	40	6.6	7.1	10.2	12.6	14.8	17.2	20.4	22.0	23.6	25.5	27.5
OR	41	12.5	13.1	17.1	20.5	23.2	26.6	31.1	33.6	36.0	39.0	42.0
PA	42	37.1	36.0	45.7	51.3	58.1	66.4	76.6	82.7	88.8	96.1	103.4
RI	44	1.4	1.5	1.9	2.3	2.5	2.6	2.9	3.1	3.3	3.6	3.9
SC	45	17.9	19.6	25.4	29.3	32.9	37.0	42.1	45.5	48.8	52.8	56.9
SD	46	0.5	0.7	0.8	1.0	1.1	1.2	1.4	1.5	1.6	1.8	1.9
TN	47	32.9	37.4	47.9	54.5	61.1	69.1	79.0	85.3	91.6	99.1	106.7
TX	48	69.2	74.9	99.0	116.0	132.3	151.6	175.7	189.7	203.7	220.5	237.2
UT	49	2.6	3.2	4.3	5.2	6.1	7.1	8.3	8.9	9.6	10.4	11.2
VT	50	0.9	1.0	1.4	1.8	2.2	2.6	3.1	3.3	3.6	3.9	4.2
VA	51	12.9	14.7	18.7	21.4	24.1	27.1	31.0	33.5	35.9	38.9	41.8
WA	53	32.5	33.8	44.6	53.3	61.4	70.3	81.6	88.1	94.6	102.4	110.2
WV	54	11.5	10.5	14.0	16.4	18.6	21.1	24.2	26.1	28.1	30.4	32.7
WI	55	14.4	15.0	18.8	21.2	24.0	27.5	31.8	34.4	36.9	39.9	43.0
WY	56	0.5	0.5	0.7	0.8	0.9	1.0	1.2	1.3	1.4	1.5	1.6
US		726.0	777.1	1005.6	1173.8	1333.6	1522.5	1754.8	1895.1	2035.4	2202.6	2369.8

MANUFACTURING ELECTRICITY PROJECTIONS - STATE SHARES

REFERENCE CASE ANL/ARAM/AUSM 3/19/86

		1980	1985	1990	1995	2000	2005	2010	2015	2020	2025	2030
AL	1	0.0357	0.0376	0.0385	0.0385	0.0385	0.0384	0.0384	0.0384	0.0384	0.0384	0.0384
AK	2	0.0011	0.0010	0.0011	0.0011	0.0011	0.0010	0.0010	0.0010	0.0010	0.0010	0.0010
AZ	4	0.0051	0.0062	0.0064	0.0066	0.0069	0.0071	0.0070	0.0070	0.0070	0.0070	0.0070
AR	5	0.0138	0.0146	0.0152	0.0155	0.0154	0.0153	0.0152	0.0152	0.0152	0.0152	0.0152
CA	6	0.0534	0.0580	0.0596	0.0608	0.0619	0.0626	0.0627	0.0627	0.0627	0.0627	0.0627
CO	8	0.0052	0.0059	0.0062	0.0065	0.0068	0.0071	0.0073	0.0073	0.0073	0.0073	0.0073
CT	9	0.0033	0.0082	0.0082	0.0084	0.0087	0.0088	0.0088	0.0088	0.0088	0.0088	0.0088
DE	10	0.0035	0.0036	0.0035	0.0036	0.0036	0.0035	0.0035	0.0035	0.0035	0.0035	0.0035
DC	11	0.0002	0.0002	0.0002	0.0002	0.0002	0.0002	0.0002	0.0002	0.0002	0.0002	0.0002
FL	12	0.0177	0.0209	0.0219	0.0227	0.0231	0.0233	0.0234	0.0234	0.0234	0.0234	0.0234
GA	13	0.0247	0.0267	0.0263	0.0259	0.0255	0.0251	0.0247	0.0247	0.0247	0.0247	0.0247
HI	15	0.0012	0.0012	0.0011	0.0011	0.0011	0.0011	0.0011	0.0011	0.0011	0.0011	0.0011
ID	16	0.0069	0.0073	0.0075	0.0076	0.0075	0.0074	0.0073	0.0073	0.0073	0.0073	0.0073
IL	17	0.0432	0.0379	0.0370	0.0363	0.0359	0.0358	0.0356	0.0356	0.0356	0.0356	0.0356
IN	18	0.0395	0.0398	0.0391	0.0392	0.0388	0.0384	0.0381	0.0381	0.0381	0.0381	0.0381
IA	19	0.0106	0.0095	0.0093	0.0091	0.0088	0.0087	0.0085	0.0085	0.0085	0.0085	0.0085
KS	20	0.0076	0.0074	0.0075	0.0078	0.0079	0.0080	0.0082	0.0082	0.0082	0.0082	0.0082
KY	21	0.0369	0.0363	0.0366	0.0368	0.0371	0.0375	0.0376	0.0376	0.0376	0.0376	0.0376
LA	22	0.0465	0.0414	0.0420	0.0423	0.0420	0.0418	0.0420	0.0420	0.0420	0.0420	0.0420
ME	23	0.0098	0.0100	0.0103	0.0104	0.0105	0.0106	0.0106	0.0106	0.0106	0.0106	0.0106
MD	24	0.0121	0.0117	0.0110	0.0106	0.0106	0.0106	0.0106	0.0106	0.0106	0.0106	0.0106
MA	25	0.0115	0.0117	0.0121	0.0126	0.0125	0.0126	0.0126	0.0126	0.0126	0.0126	0.0126
MI	26	0.0374	0.0353	0.0355	0.0350	0.0352	0.0356	0.0359	0.0359	0.0359	0.0359	0.0359
MN	27	0.0099	0.0107	0.0109	0.0111	0.0112	0.0113	0.0114	0.0114	0.0114	0.0114	0.0114
MS	28	0.0084	0.0087	0.0089	0.0089	0.0088	0.0088	0.0088	0.0088	0.0088	0.0088	0.0088
MO	29	0.0152	0.0159	0.0155	0.0152	0.0150	0.0148	0.0146	0.0146	0.0146	0.0146	0.0146
MT	30	0.0060	0.0056	0.0056	0.0058	0.0057	0.0057	0.0057	0.0057	0.0057	0.0057	0.0057
NE	31	0.0038	0.0038	0.0038	0.0038	0.0037	0.0037	0.0036	0.0036	0.0036	0.0036	0.0036
NV	32	0.0014	0.0016	0.0017	0.0017	0.0018	0.0018	0.0019	0.0019	0.0019	0.0019	0.0019
NH	33	0.0022	0.0024	0.0026	0.0027	0.0029	0.0031	0.0032	0.0032	0.0032	0.0032	0.0032
NJ	34	0.0204	0.0204	0.0198	0.0198	0.0198	0.0199	0.0199	0.0199	0.0199	0.0199	0.0199
NM	35	0.0011	0.0012	0.0013	0.0013	0.0014	0.0014	0.0014	0.0014	0.0014	0.0014	0.0014
NY	36	0.0432	0.0416	0.0408	0.0402	0.0400	0.0402	0.0402	0.0402	0.0402	0.0402	0.0402
NC	37	0.0356	0.0376	0.0376	0.0371	0.0368	0.0363	0.0360	0.0360	0.0360	0.0360	0.0360
ND	38	0.0010	0.0011	0.0011	0.0011	0.0011	0.0011	0.0011	0.0011	0.0011	0.0011	0.0011
OH	39	0.0710	0.0681	0.0658	0.0653	0.0646	0.0643	0.0639	0.0639	0.0639	0.0639	0.0639
OK	40	0.0091	0.0091	0.0102	0.0107	0.0111	0.0113	0.0116	0.0116	0.0116	0.0116	0.0116
OR	41	0.0172	0.0168	0.0170	0.0174	0.0174	0.0175	0.0177	0.0177	0.0177	0.0177	0.0177
PA	42	0.0512	0.0463	0.0455	0.0437	0.0436	0.0436	0.0436	0.0436	0.0436	0.0436	0.0436
RI	44	0.0020	0.0019	0.0019	0.0019	0.0019	0.0017	0.0016	0.0016	0.0016	0.0016	0.0016
SC	45	0.0247	0.0252	0.0253	0.0250	0.0247	0.0243	0.0240	0.0240	0.0240	0.0240	0.0240
SD	46	0.0007	0.0008	0.0008	0.0008	0.0008	0.0008	0.0008	0.0008	0.0008	0.0008	0.0008
TN	47	0.0454	0.0481	0.0476	0.0464	0.0458	0.0454	0.0450	0.0450	0.0450	0.0450	0.0450
TX	48	0.0954	0.0964	0.0984	0.0988	0.0992	0.0995	0.1001	0.1001	0.1001	0.1001	0.1001
UT	49	0.0036	0.0041	0.0043	0.0044	0.0046	0.0047	0.0047	0.0047	0.0047	0.0047	0.0047
VT	50	0.0013	0.0013	0.0014	0.0015	0.0016	0.0017	0.0018	0.0018	0.0018	0.0018	0.0018
VA	51	0.0177	0.0189	0.0186	0.0182	0.0181	0.0178	0.0177	0.0177	0.0177	0.0177	0.0177
WA	53	0.0447	0.0435	0.0443	0.0454	0.0460	0.0462	0.0465	0.0465	0.0465	0.0465	0.0465
WV	54	0.0158	0.0136	0.0139	0.0140	0.0140	0.0139	0.0138	0.0138	0.0138	0.0138	0.0138
WI	55	0.0198	0.0193	0.0187	0.0181	0.0180	0.0181	0.0181	0.0181	0.0181	0.0181	0.0181
WY	56	0.0007	0.0007	0.0007	0.0007	0.0007	0.0007	0.0007	0.0007	0.0007	0.0007	0.0007
US		1.0000	1.0000	1.0000	1.0000	1.0000	1.0000	1.0000	1.0000	1.0000	1.0000	1.0000

MANUFACTURING ELECTRICITY PROJECTIONS - AVERAGE ANNUAL GROWTH RATES (%) REFERENCE CASE ANL/ARAM/AUSM 3/19/86

		1980-1985	1985-1990	1990-1995	1995-2000	2000-2005	2005-2010	2010-2015	2015-2020	2020-2025	2025-2030
AL	1	2.44	5.82	3.13	2.56	2.67	2.88	1.55	1.44	1.59	1.47
AK	2	-1.04	6.37	4.34	2.07	1.75	2.48	1.55	1.44	1.59	1.47
AZ	4	5.24	6.26	3.74	3.32	3.23	2.85	1.55	1.44	1.59	1.47
AR	5	2.49	6.13	3.59	2.48	2.50	2.79	1.55	1.44	1.59	1.47
CA	6	3.05	5.83	3.55	2.93	2.94	2.91	1.55	1.44	1.59	1.47
CO	8	3.93	6.43	4.13	3.50	3.50	3.39	1.55	1.44	1.59	1.47
CT	9	1.18	5.30	3.73	3.19	2.90	3.05	1.55	1.44	1.59	1.47
DE	10	2.14	4.76	3.46	2.62	2.50	2.75	1.55	1.44	1.59	1.47
DC	11	0.94	4.77	3.09	2.49	2.70	3.04	1.55	1.44	1.59	1.47
FL	12	4.74	6.31	3.89	2.96	2.84	2.99	1.55	1.44	1.59	1.47
GA	13	2.94	4.96	2.79	2.31	2.32	2.62	1.55	1.44	1.59	1.47
HI	15	1.32	4.92	3.28	2.16	2.19	2.40	1.55	1.44	1.59	1.47
ID	16	2.68	5.83	3.49	2.30	2.35	2.64	1.55	1.44	1.59	1.47
IL	17	-1.24	4.80	2.73	2.39	2.61	2.77	1.55	1.44	1.59	1.47
IN	18	1.52	4.92	3.22	2.38	2.48	2.71	1.55	1.44	1.59	1.47
IA	19	-0.70	4.68	2.66	2.06	2.29	2.51	1.55	1.44	1.59	1.47
KS	20	0.96	5.60	3.82	2.83	3.05	3.33	1.55	1.44	1.59	1.47
KY	21	1.04	5.51	3.24	2.76	2.87	2.98	1.55	1.44	1.59	1.47
LA	22	-0.93	5.57	3.28	2.46	2.60	2.95	1.55	1.44	1.59	1.47
ME	23	1.85	5.87	3.35	2.75	2.79	2.99	1.55	1.44	1.59	1.47
MD	24	0.64	4.02	2.49	2.56	2.70	2.79	1.55	1.44	1.59	1.47
MA	25	1.72	6.03	3.95	2.51	2.74	2.85	1.55	1.44	1.59	1.47
MI	26	1.82	3.71	2.88	2.68	2.94	3.06	1.55	1.44	1.59	1.47
MN	27	2.96	5.62	3.56	2.73	2.98	3.11	1.55	1.44	1.59	1.47
MS	28	2.13	5.78	3.14	2.35	2.59	2.81	1.55	1.44	1.59	1.47
MO	29	2.23	4.75	2.76	2.30	2.45	2.54	1.55	1.44	1.59	1.47
MT	30	-0.22	5.63	3.56	2.49	2.49	2.84	1.55	1.44	1.59	1.47
NE	31	1.46	5.09	3.17	2.36	2.44	2.67	1.55	1.44	1.59	1.47
NV	32	4.14	6.22	3.88	3.22	3.23	3.19	1.55	1.44	1.59	1.47
NH	33	3.33	6.89	4.45	4.07	3.64	3.58	1.55	1.44	1.59	1.47
NJ	34	1.30	4.70	3.14	2.59	2.76	2.93	1.55	1.44	1.59	1.47
NM	35	3.93	6.28	3.95	3.12	3.25	3.15	1.55	1.44	1.59	1.47
NY	36	0.63	4.84	2.85	2.50	2.78	2.89	1.55	1.44	1.59	1.47
NC	37	2.50	5.31	2.86	2.38	2.43	2.73	1.55	1.44	1.59	1.47
ND	38	2.94	5.20	2.96	2.49	2.59	2.73	1.55	1.44	1.59	1.47
OH	39	0.52	4.59	2.98	2.38	2.56	2.78	1.55	1.44	1.59	1.47
OK	40	1.35	7.69	4.28	3.22	3.12	3.41	1.55	1.44	1.59	1.47
OR	41	0.89	5.44	3.71	2.56	2.79	3.13	1.55	1.44	1.59	1.47
PA	42	-0.63	4.90	2.34	2.53	2.70	2.89	1.55	1.44	1.59	1.47
RI	44	1.02	5.12	3.15	1.80	1.33	1.72	1.55	1.44	1.59	1.47
SC	45	1.77	5.36	2.89	2.34	2.35	2.64	1.55	1.44	1.59	1.47
SD	46	4.43	4.93	2.95	2.47	2.61	2.59	1.55	1.44	1.59	1.47
TN	47	2.58	5.05	2.62	2.33	2.48	2.71	1.55	1.44	1.59	1.47
TX	48	1.60	5.72	3.23	2.67	2.75	2.99	1.55	1.44	1.59	1.47
UT	49	4.25	6.15	3.91	3.18	3.13	3.08	1.55	1.44	1.59	1.47
VT	50	1.96	7.43	4.82	3.65	3.62	3.47	1.55	1.44	1.59	1.47
VA	51	2.70	4.88	2.76	2.38	2.43	2.68	1.55	1.44	1.59	1.47
WA	53	0.81	5.70	3.64	2.86	2.75	3.01	1.55	1.44	1.59	1.47
WV	54	-1.67	5.77	3.28	2.59	2.54	2.77	1.55	1.44	1.59	1.47
WI	55	0.93	4.53	2.48	2.50	2.78	2.95	1.55	1.44	1.59	1.47
WY	56	-0.73	5.70	3.99	2.64	2.52	2.88	1.55	1.44	1.59	1.47
US		1.37	5.29	3.14	2.59	2.69	2.88	1.55	1.44	1.59	1.47

MANUFACTURING ELECTRICITY PROJECTIONS - SUMMARY TABLE

REFERENCE CASE ANL/ARAM/AUSM 3/19/86

		BASE YEAR VALUE (10**9 KWH)	AVERAGE ANNUAL GROWTH RATES (%)				RELATIVE GROWTH FROM 1980 MEASURED BY CHANGE IN SHARE (%)			
		1980	1980-2000	2000-2010	2010-2030	1980-2030	1990	2000	2010	2030
AL	1	25.88	3.48	2.77	1.51	2.55	8.09	7.86	7.75	7.75
AK	2	0.82	2.90	2.11	1.51	2.19	-6.65	-3.58	-9.70	-9.70
AZ	4	3.71	4.63	3.04	1.51	3.06	26.27	34.68	38.06	38.06
AR	5	10.03	3.66	2.65	1.51	2.60	9.96	11.81	10.34	10.34
CA	6	38.79	3.85	2.93	1.51	2.72	11.63	15.79	17.40	17.40
CO	8	3.78	4.49	3.45	1.51	3.08	19.56	31.11	39.81	39.81
CT	9	5.99	3.34	2.93	1.51	2.53	-0.86	5.05	7.02	7.02
DE	10	2.52	3.24	2.63	1.51	2.42	1.26	2.97	1.42	1.42
DC	11	0.13	2.81	2.87	1.51	2.30	-4.48	-5.17	-4.36	-4.36
FL	12	12.87	4.47	2.92	1.51	2.97	23.58	30.49	32.18	32.18
GA	13	17.96	3.25	2.47	1.51	2.39	6.31	3.14	0.03	0.03
HI	15	0.84	2.91	2.30	1.51	2.23	-1.98	-3.37	-7.85	-7.85
ID	16	4.98	3.57	2.50	1.51	2.53	9.38	9.72	6.69	6.69
IL	17	31.33	2.15	2.69	1.51	2.00	-14.24	-16.73	-17.50	-17.50
IN	18	28.65	3.00	2.60	1.51	2.32	-0.99	-1.62	-3.40	-3.40
IA	19	7.63	2.16	2.40	1.51	1.95	-12.39	-16.59	-19.66	-19.66
KS	20	5.50	3.29	3.19	1.51	2.55	-0.58	3.96	8.11	8.11
KY	21	26.76	3.13	2.92	1.51	2.44	-0.58	0.75	2.14	2.14
LA	22	33.74	2.57	2.77	1.51	2.19	-9.66	-9.61	-9.70	-9.70
ME	23	7.12	3.44	2.89	1.51	2.56	5.22	7.15	8.30	8.30
MD	24	8.78	2.42	2.74	1.51	2.12	-9.22	-12.15	-12.50	-12.50
MA	25	8.34	3.54	2.79	1.51	2.58	5.40	9.21	9.33	9.33
MI	26	27.17	2.77	3.00	1.51	2.31	-5.22	-5.99	-4.03	-4.03
MN	27	7.18	3.71	3.04	1.51	2.69	9.79	12.83	15.71	15.71
MS	28	6.10	3.34	2.70	1.51	2.48	6.24	5.00	4.14	4.14
MO	29	11.07	3.01	2.50	1.51	2.31	1.71	-1.55	-4.25	-4.25
MT	30	4.37	2.84	2.66	1.51	2.27	-6.11	-4.63	-5.72	-5.72
NE	31	2.74	3.01	2.56	1.51	2.32	-0.48	-1.43	-3.57	-3.57
NV	32	1.01	4.36	3.21	1.51	2.98	19.63	27.84	33.23	33.23
NH	33	1.58	4.68	3.61	1.51	3.19	18.70	35.83	47.24	47.24
NJ	34	14.83	2.93	2.84	1.51	2.34	-3.10	-3.06	-2.48	-2.48
NM	35	0.79	4.31	3.20	1.51	2.96	18.71	26.71	31.91	31.91
NY	36	31.35	2.69	2.84	1.51	2.25	-5.64	-7.36	-6.88	-6.88
NC	37	25.83	3.26	2.58	1.51	2.42	5.83	3.35	1.29	1.29
ND	38	0.74	3.39	2.66	1.51	2.49	7.56	6.09	4.84	4.84
OH	39	51.55	2.60	2.67	1.51	2.18	-7.28	-8.95	-9.93	-9.93
OK	40	6.59	4.11	3.26	1.51	2.90	11.83	21.86	27.68	27.68
OR	41	12.52	3.14	2.96	1.51	2.45	-1.65	0.94	2.71	2.71
PA	42	37.14	2.27	2.80	1.51	2.07	-11.13	-14.79	-14.69	-14.69
RI	44	1.44	2.76	1.53	1.51	2.01	-2.53	-6.13	-17.01	-17.01
SC	45	17.95	3.08	2.49	1.51	2.33	2.31	-0.15	-2.94	-2.94
SD	46	0.53	3.69	2.60	1.51	2.60	14.06	12.35	10.34	10.34
TN	47	32.93	3.14	2.60	1.51	2.38	4.93	1.06	-0.77	-0.77
TX	48	69.23	3.29	2.87	1.51	2.49	3.22	4.06	4.98	4.98
UT	49	2.59	4.36	3.11	1.51	2.96	19.80	27.93	32.02	32.02
VT	50	0.91	4.45	3.54	1.51	3.08	13.86	29.96	39.89	39.89
VA	51	12.88	3.18	2.55	1.51	2.38	4.69	1.76	-0.49	-0.49
WA	53	32.46	3.24	2.88	1.51	2.47	-0.82	2.98	3.98	3.98
WV	54	11.47	2.46	2.66	1.51	2.12	-12.11	-11.53	-12.62	-12.62
WI	55	14.36	2.60	2.86	1.51	2.22	-5.66	-9.03	-8.33	-8.33
WY	56	0.52	2.87	2.70	1.51	2.29	-8.15	-4.04	-4.85	-4.85
US		726.05	3.09	2.78	1.51	2.39				

		1980	1985	1990	1995	2000	2005	2010	2015	2020	2025	2030
AL	1	29.7	33.1	43.9	50.9	58.1	66.5	76.9	83.1	89.2	96.6	103.9
AK	2	1.4	1.6	1.8	2.3	2.5	2.8	2.9	3.1	3.4	3.6	3.9
AZ	4	8.6	11.1	13.7	17.0	20.3	23.6	27.3	29.5	31.7	34.3	36.9
AR	5	12.5	13.8	18.3	21.8	24.4	27.4	31.3	33.8	36.3	39.3	42.3
CA	6	53.6	61.9	82.5	99.7	115.2	132.8	153.1	165.3	177.6	192.2	206.8
CO	8	7.1	8.7	11.5	13.7	15.9	18.6	21.8	23.5	25.3	27.3	29.4
CT	9	6.1	6.5	8.5	10.2	11.9	13.7	15.9	17.2	18.5	20.0	21.5
DE	10	2.5	2.8	3.5	4.2	4.8	5.4	6.2	6.7	7.2	7.8	8.3
DC	11	3.4	2.9	3.1	3.5	4.3	5.2	6.0	6.5	7.0	7.6	8.1
FL	12	21.7	27.2	36.0	43.0	50.7	59.5	70.0	75.6	81.1	87.8	94.5
GA	13	22.2	26.1	33.0	37.6	42.1	47.1	53.5	57.8	62.0	67.1	72.2
HI	15	3.3	3.1	4.0	4.8	5.4	6.0	6.7	7.2	7.7	8.4	9.0
ID	16	5.0	5.7	7.5	9.0	10.0	11.3	12.8	13.9	14.9	16.1	17.3
IL	17	37.0	34.8	44.1	50.3	56.8	64.4	73.1	79.0	84.8	91.8	98.8
IN	18	34.2	36.3	46.4	53.9	60.1	67.6	76.6	82.7	88.8	96.1	103.4
IA	19	9.8	9.4	11.7	13.4	14.8	16.5	18.6	20.0	21.5	23.3	25.1
KS	20	7.9	8.3	10.7	12.9	14.6	17.0	20.2	21.8	23.4	25.3	27.2
KY	21	28.3	29.7	38.8	45.3	51.9	59.8	69.2	74.7	80.2	86.8	93.4
LA	22	33.7	32.2	42.2	49.6	56.0	63.7	73.6	79.5	85.4	92.4	99.5
ME	23	7.4	8.1	10.7	12.6	14.4	16.5	19.1	20.7	22.2	24.0	25.8
MD	24	13.3	14.0	17.4	20.0	22.8	25.9	29.6	32.0	34.3	37.1	40.0
MA	25	9.0	9.8	13.3	16.2	18.4	21.1	24.3	26.3	28.2	30.5	32.8
MI	26	33.6	36.9	45.7	51.9	59.0	67.6	77.3	83.5	89.6	97.0	104.4
MN	27	16.0	18.3	22.6	26.6	30.1	34.7	40.5	43.7	47.0	50.8	54.7
MS	28	8.4	8.8	11.2	13.0	14.7	16.6	19.0	20.5	22.0	23.9	25.7
MO	29	11.2	12.5	15.8	18.1	20.3	22.9	25.9	28.0	30.1	32.5	35.0
MT	30	5.9	5.9	7.6	9.0	10.1	11.3	12.9	13.9	14.9	16.2	17.4
NE	31	4.2	4.6	5.6	6.4	7.2	8.1	9.1	9.9	10.6	11.5	12.3
NV	32	5.0	5.4	8.2	10.4	12.0	14.9	19.7	21.2	22.8	24.7	26.6
NH	33	2.5	3.0	4.1	4.9	5.8	6.7	7.7	8.3	8.9	9.7	10.4
NJ	34	16.9	18.5	23.4	27.3	31.0	35.3	40.7	43.9	47.2	51.1	54.9
NM	35	3.0	3.5	4.6	5.5	6.4	7.4	8.6	9.3	10.0	10.8	11.6
NY	36	34.3	36.0	46.8	53.8	61.2	70.2	80.9	87.4	93.9	101.6	109.3
NC	37	27.7	31.3	40.4	46.5	52.3	58.9	67.3	72.7	78.1	84.5	90.9
ND	38	1.6	1.7	2.1	2.4	2.6	2.9	3.3	3.5	3.8	4.1	4.4
OH	39	58.3	59.4	75.4	86.7	97.4	110.1	125.4	135.4	145.4	157.4	169.3
OK	40	10.4	10.8	14.5	17.7	20.5	23.8	27.7	29.9	32.1	34.7	37.4
OR	41	14.0	14.3	18.5	22.3	25.3	28.9	33.6	36.3	38.9	42.1	45.3
PA	42	48.3	46.8	61.3	68.9	78.1	88.7	101.5	109.6	117.7	127.4	137.0
RI	44	1.4	1.5	1.9	2.3	2.5	2.6	2.9	3.1	3.3	3.6	3.9
SC	45	17.9	19.6	25.4	29.3	32.9	37.0	42.1	45.5	48.8	52.8	56.9
SD	46	1.3	1.4	1.7	1.9	2.1	2.3	2.6	2.8	3.0	3.3	3.5
TN	47	35.4	40.1	51.0	58.0	65.5	74.3	85.3	92.1	98.9	107.1	115.2
TX	48	90.5	97.5	127.7	150.3	169.8	194.7	227.2	245.4	263.5	285.2	306.8
UT	49	4.5	5.4	7.2	8.6	10.0	11.7	13.9	15.0	16.1	17.4	18.7
VT	50	1.3	1.5	2.0	2.5	2.9	3.4	3.9	4.2	4.5	4.9	5.3
VA	51	14.1	16.1	20.4	23.3	26.4	29.8	34.2	37.0	39.7	43.0	46.2
WA	53	32.5	33.8	44.6	53.3	61.4	70.3	81.6	88.1	94.6	102.4	110.2
WV	54	11.8	10.9	14.4	17.0	19.3	21.8	25.0	27.0	29.0	31.4	33.7
WI	55	15.4	16.0	20.0	22.5	25.5	29.2	33.6	36.3	39.0	42.2	45.4
WY	56	4.7	4.3	5.9	6.8	7.5	8.3	9.5	10.3	11.1	12.0	12.9
US		889.9	952.8	1232.9	1439.1	1635.0	1866.7	2151.5	2323.5	2495.5	2700.5	2905.5

INDUSTRIAL ELECTRICITY PROJECTIONS - STATE SHARE

REFERENCE CASE ANL/ARAM/AUSM 3/19/86

		1980	1985	1990	1995	2000	2005	2010	2015	2020	2025	2030
AL	1	0.0334	0.0347	0.0356	0.0353	0.0355	0.0356	0.0358	0.0358	0.0358	0.0358	0.0358
AK	2	0.0015	0.0017	0.0015	0.0016	0.0015	0.0015	0.0013	0.0013	0.0013	0.0013	0.0013
AZ	4	0.0096	0.0117	0.0111	0.0113	0.0124	0.0127	0.0127	0.0127	0.0127	0.0127	0.0127
AR	5	0.0141	0.0145	0.0149	0.0151	0.0149	0.0147	0.0146	0.0146	0.0146	0.0146	0.0146
CA	6	0.0602	0.0650	0.0669	0.0693	0.0704	0.0711	0.0712	0.0712	0.0712	0.0712	0.0712
CO	8	0.0080	0.0092	0.0093	0.0095	0.0097	0.0100	0.0101	0.0101	0.0101	0.0101	0.0101
CT	9	0.0069	0.0068	0.0069	0.0071	0.0073	0.0073	0.0074	0.0074	0.0074	0.0074	0.0074
DE	10	0.0028	0.0029	0.0029	0.0029	0.0029	0.0029	0.0029	0.0029	0.0029	0.0029	0.0029
DC	11	0.0038	0.0031	0.0025	0.0024	0.0027	0.0028	0.0028	0.0028	0.0028	0.0028	0.0028
FL	12	0.0244	0.0285	0.0292	0.0299	0.0310	0.0319	0.0325	0.0325	0.0325	0.0325	0.0325
GA	13	0.0250	0.0273	0.0267	0.0261	0.0257	0.0252	0.0249	0.0249	0.0249	0.0249	0.0249
HI	15	0.0037	0.0032	0.0033	0.0033	0.0033	0.0032	0.0031	0.0031	0.0031	0.0031	0.0031
ID	16	0.0056	0.0060	0.0061	0.0062	0.0061	0.0060	0.0060	0.0060	0.0060	0.0060	0.0060
IL	17	0.0415	0.0365	0.0358	0.0350	0.0347	0.0345	0.0340	0.0340	0.0340	0.0340	0.0340
IN	18	0.0385	0.0381	0.0376	0.0374	0.0368	0.0362	0.0356	0.0356	0.0356	0.0356	0.0356
IA	19	0.0110	0.0098	0.0095	0.0093	0.0090	0.0088	0.0086	0.0086	0.0086	0.0086	0.0086
KS	20	0.0089	0.0087	0.0087	0.0089	0.0090	0.0091	0.0094	0.0094	0.0094	0.0094	0.0094
KY	21	0.0318	0.0312	0.0315	0.0315	0.0318	0.0320	0.0321	0.0321	0.0321	0.0321	0.0321
LA	22	0.0379	0.0338	0.0342	0.0345	0.0343	0.0341	0.0342	0.0342	0.0342	0.0342	0.0342
ME	23	0.0083	0.0085	0.0087	0.0088	0.0088	0.0089	0.0089	0.0089	0.0089	0.0089	0.0089
MD	24	0.0150	0.0147	0.0141	0.0139	0.0139	0.0138	0.0138	0.0138	0.0138	0.0138	0.0138
MA	25	0.0101	0.0103	0.0108	0.0113	0.0112	0.0113	0.0113	0.0113	0.0113	0.0113	0.0113
MI	26	0.0377	0.0388	0.0371	0.0361	0.0361	0.0362	0.0359	0.0359	0.0359	0.0359	0.0359
MN	27	0.0180	0.0192	0.0183	0.0185	0.0184	0.0186	0.0188	0.0188	0.0188	0.0188	0.0188
MS	28	0.0094	0.0092	0.0091	0.0090	0.0090	0.0089	0.0088	0.0088	0.0088	0.0088	0.0088
MO	29	0.0126	0.0131	0.0128	0.0126	0.0124	0.0122	0.0120	0.0120	0.0120	0.0120	0.0120
MT	30	0.0067	0.0061	0.0062	0.0063	0.0062	0.0060	0.0060	0.0060	0.0060	0.0060	0.0060
NE	31	0.0048	0.0048	0.0045	0.0045	0.0044	0.0043	0.0042	0.0042	0.0042	0.0042	0.0042
NV	32	0.0056	0.0056	0.0066	0.0073	0.0073	0.0080	0.0091	0.0091	0.0091	0.0091	0.0091
NH	33	0.0028	0.0032	0.0033	0.0034	0.0035	0.0036	0.0036	0.0036	0.0036	0.0036	0.0036
NJ	34	0.0190	0.0194	0.0190	0.0190	0.0190	0.0189	0.0189	0.0189	0.0189	0.0189	0.0189
NM	35	0.0033	0.0037	0.0037	0.0038	0.0039	0.0040	0.0040	0.0040	0.0040	0.0040	0.0040
NY	36	0.0385	0.0378	0.0380	0.0374	0.0374	0.0376	0.0376	0.0376	0.0376	0.0376	0.0376
NC	37	0.0311	0.0328	0.0328	0.0323	0.0320	0.0316	0.0313	0.0313	0.0313	0.0313	0.0313
ND	38	0.0018	0.0018	0.0017	0.0016	0.0016	0.0016	0.0015	0.0015	0.0015	0.0015	0.0015
OH	39	0.0655	0.0624	0.0611	0.0603	0.0596	0.0590	0.0583	0.0583	0.0583	0.0583	0.0583
OK	40	0.0116	0.0113	0.0118	0.0123	0.0126	0.0127	0.0129	0.0129	0.0129	0.0129	0.0129
OR	41	0.0157	0.0150	0.0150	0.0155	0.0155	0.0155	0.0156	0.0156	0.0156	0.0156	0.0156
PA	42	0.0542	0.0491	0.0498	0.0479	0.0478	0.0475	0.0472	0.0472	0.0472	0.0472	0.0472
RI	44	0.0016	0.0016	0.0016	0.0016	0.0015	0.0014	0.0013	0.0013	0.0013	0.0013	0.0013
SC	45	0.0202	0.0206	0.0206	0.0204	0.0201	0.0198	0.0196	0.0196	0.0196	0.0196	0.0196
SD	46	0.0015	0.0015	0.0014	0.0014	0.0013	0.0013	0.0012	0.0012	0.0012	0.0012	0.0012
TN	47	0.0398	0.0421	0.0413	0.0403	0.0400	0.0398	0.0397	0.0397	0.0397	0.0397	0.0397
TX	48	0.1017	0.1024	0.1036	0.1045	0.1038	0.1043	0.1056	0.1056	0.1056	0.1056	0.1056
UT	49	0.0051	0.0056	0.0058	0.0060	0.0061	0.0063	0.0064	0.0064	0.0064	0.0064	0.0064
VT	50	0.0015	0.0015	0.0016	0.0017	0.0018	0.0018	0.0018	0.0018	0.0018	0.0018	0.0018
VA	51	0.0159	0.0168	0.0165	0.0162	0.0161	0.0160	0.0159	0.0159	0.0159	0.0159	0.0159
WA	53	0.0365	0.0355	0.0362	0.0371	0.0376	0.0377	0.0379	0.0379	0.0379	0.0379	0.0379
WV	54	0.0133	0.0114	0.0117	0.0118	0.0118	0.0117	0.0116	0.0116	0.0116	0.0116	0.0116
WI	55	0.0173	0.0168	0.0162	0.0157	0.0156	0.0156	0.0156	0.0156	0.0156	0.0156	0.0156
WY	56	0.0053	0.0045	0.0048	0.0047	0.0046	0.0045	0.0044	0.0044	0.0044	0.0044	0.0044
US		1.0000	1.0000	1.0000	1.0000	1.0000	1.0000	1.0000	1.0000	1.0000	1.0000	1.0000

		1980-1985	1985-1990	1990-1995	1995-2000	2000-2005	2005-2010	2010-2015	2015-2020	2020-2025	2025-2030
AL	1	2.18	5.85	2.97	2.69	2.74	2.95	1.55	1.44	1.59	1.47
AK	2	3.07	2.74	4.59	1.51	2.69	0.51	1.55	1.44	1.59	1.47
AZ	4	5.34	4.18	4.44	3.58	3.14	2.91	1.55	1.44	1.59	1.47
AR	5	2.03	5.79	3.49	2.33	2.36	2.67	1.55	1.44	1.59	1.47
CA	6	2.95	5.91	3.86	2.92	2.89	2.89	1.55	1.44	1.59	1.47
CO	8	4.17	5.62	3.57	3.09	3.12	3.22	1.55	1.44	1.59	1.47
CT	9	1.26	5.36	3.76	3.17	2.90	3.07	1.55	1.44	1.59	1.47
DE	10	2.14	4.76	3.46	2.62	2.50	2.75	1.55	1.44	1.59	1.47
DC	11	-2.68	0.92	2.47	4.51	3.63	3.05	1.55	1.44	1.59	1.47
FL	12	4.55	5.80	3.60	3.35	3.27	3.29	1.55	1.44	1.59	1.47
GA	13	3.25	4.82	2.64	2.29	2.28	2.59	1.55	1.44	1.59	1.47
HI	15	-1.48	5.59	3.60	2.30	2.11	2.21	1.55	1.44	1.59	1.47
ID	16	2.68	5.83	3.49	2.30	2.35	2.64	1.55	1.44	1.59	1.47
IL	17	-1.21	4.88	2.65	2.44	2.56	2.58	1.55	1.44	1.59	1.47
IN	18	1.15	5.06	3.03	2.22	2.38	2.52	1.55	1.44	1.59	1.47
IA	19	-0.85	4.50	2.69	2.03	2.21	2.43	1.55	1.44	1.59	1.47
KS	20	0.93	5.32	3.67	2.62	3.06	3.44	1.55	1.44	1.59	1.47
KY	21	0.95	5.48	3.15	2.77	2.85	2.96	1.55	1.44	1.59	1.47
LA	22	-0.93	5.57	3.28	2.46	2.60	2.95	1.55	1.44	1.59	1.47
ME	23	1.78	5.80	3.33	2.72	2.75	2.96	1.55	1.44	1.59	1.47
MD	24	1.01	4.42	2.80	2.65	2.55	2.73	1.55	1.44	1.59	1.47
MA	25	1.83	6.33	4.02	2.50	2.77	2.92	1.55	1.44	1.59	1.47
MI	26	1.94	4.36	2.57	2.58	2.77	2.71	1.55	1.44	1.59	1.47
MN	27	2.69	4.26	3.34	2.53	2.87	3.11	1.55	1.44	1.59	1.47
MS	28	1.01	4.93	3.02	2.41	2.54	2.71	1.55	1.44	1.59	1.47
MO	29	2.21	4.76	2.75	2.29	2.45	2.54	1.55	1.44	1.59	1.47
MT	30	-0.27	5.36	3.51	2.34	2.16	2.66	1.55	1.44	1.59	1.47
NE	31	1.45	4.13	2.91	2.19	2.30	2.58	1.55	1.44	1.59	1.47
NV	32	1.59	8.77	5.04	2.75	4.45	5.76	1.55	1.44	1.59	1.47
NH	33	4.16	6.15	3.86	3.33	2.89	2.99	1.55	1.44	1.59	1.47
NJ	34	1.82	4.86	3.13	2.54	2.64	2.87	1.55	1.44	1.59	1.47
NM	35	3.47	5.49	3.76	2.95	3.01	3.09	1.55	1.44	1.59	1.47
NY	36	0.97	5.39	2.83	2.59	2.79	2.89	1.55	1.44	1.59	1.47
NC	37	2.46	5.26	2.83	2.40	2.41	2.71	1.55	1.44	1.59	1.47
ND	38	1.45	4.24	2.17	2.21	1.97	2.43	1.55	1.44	1.59	1.47
OH	39	0.38	4.86	2.85	2.35	2.48	2.63	1.55	1.44	1.59	1.47
OK	40	0.78	6.11	4.06	3.06	2.95	3.09	1.55	1.44	1.59	1.47
OR	41	0.39	5.35	3.80	2.52	2.71	3.03	1.55	1.44	1.59	1.47
PA	42	-0.62	5.57	2.35	2.54	2.57	2.73	1.55	1.44	1.59	1.47
RI	44	1.02	5.12	3.15	1.80	1.33	1.72	1.55	1.44	1.59	1.47
SC	45	1.77	5.36	2.89	2.34	2.35	2.64	1.55	1.44	1.59	1.47
SD	46	1.61	3.53	2.52	1.82	1.92	2.01	1.55	1.44	1.59	1.47
TN	47	2.53	4.90	2.61	2.46	2.55	2.81	1.55	1.44	1.59	1.47
TX	48	1.50	5.54	3.32	2.46	2.78	3.14	1.55	1.44	1.59	1.47
UT	49	3.44	5.99	3.69	3.09	3.22	3.39	1.55	1.44	1.59	1.47
VT	50	2.35	6.51	4.43	3.15	3.11	3.01	1.55	1.44	1.59	1.47
VA	51	2.60	4.89	2.75	2.46	2.52	2.77	1.55	1.44	1.59	1.47
WA	53	0.81	5.70	3.64	2.86	2.75	3.01	1.55	1.44	1.59	1.47
WV	54	-1.70	5.84	3.26	2.58	2.53	2.75	1.55	1.44	1.59	1.47
WI	55	0.85	4.51	2.43	2.51	2.73	2.86	1.55	1.44	1.59	1.47
WY	56	-1.72	6.46	2.82	2.17	2.00	2.78	1.55	1.44	1.59	1.47
US		1.37	5.29	3.14	2.59	2.69	2.88	1.55	1.44	1.59	1.47

INDUSTRIAL ELECTRICITY PROJECTIONS - SUMMARY TABLE

REFERENCE CASE ANL/ARAM/AUSM 3/19/86

		BASE YEAR VALUE (10**9 KWH)	AVERAGE ANNUAL GROWTH RATES (%)				RELATIVE GROWTH FROM 1980 MEASURED BY CHANGE IN SHARE (%)			
		1980	1980-2000	2000-2010	2010-2030	1980-2030	1990	2000	2010	2030
AL	1	29.69	3.41	2.85	1.51	2.54	6.86	6.53	7.18	7.18
AK	2	1.37	2.97	1.60	1.51	2.11	-3.85	-2.22	-12.95	-12.95
AZ	4	8.59	4.38	3.03	1.51	2.96	14.88	28.36	31.45	31.45
AR	5	12.51	3.40	2.51	1.51	2.46	5.77	6.24	3.49	3.49
CA	6	53.55	3.90	2.89	1.51	2.74	11.25	17.04	18.25	18.25
CO	8	7.12	4.11	3.17	1.51	2.83	16.40	21.77	26.43	26.43
CT	9	6.11	3.38	2.99	1.51	2.55	-0.21	5.79	7.89	7.89
DE	10	2.52	3.24	2.63	1.51	2.42	1.23	2.94	1.39	1.39
DC	11	3.37	1.27	3.34	1.51	1.78	-34.03	-29.92	-26.04	-26.04
FL	12	21.74	4.32	3.28	1.51	2.98	19.51	26.31	33.10	33.10
GA	13	22.21	3.25	2.43	1.51	2.39	7.14	3.10	-0.35	-0.35
HI	15	3.31	2.47	2.16	1.51	2.02	-12.10	-11.35	-16.56	-16.56
ID	16	4.98	3.57	2.50	1.51	2.53	9.36	9.70	6.67	6.67
IL	17	36.96	2.17	2.57	1.51	1.99	-13.82	-16.42	-18.14	-18.14
IN	18	34.24	2.85	2.45	1.51	2.24	-2.19	-4.45	-7.50	-7.50
IA	19	9.79	2.03	2.32	1.51	1.90	-13.78	-17.91	-21.55	-21.55
KS	20	7.92	3.12	3.25	1.51	2.50	-2.06	0.60	5.24	5.24
KY	21	28.33	3.03	2.91	1.51	2.41	-1.20	-0.22	0.97	0.97
LA	22	33.74	2.57	2.77	1.51	2.19	-9.68	-9.63	-9.72	-9.72
ME	23	7.40	3.40	2.85	1.51	2.53	4.51	6.16	6.86	6.86
MD	24	13.34	2.71	2.64	1.51	2.22	-5.76	-7.01	-8.28	-8.28
MA	25	8.95	3.66	2.85	1.51	2.63	7.47	11.63	12.35	12.35
MI	26	33.56	2.86	2.74	1.51	2.30	-1.64	-4.33	-4.75	-4.75
MN	27	16.05	3.20	2.99	1.51	2.48	1.54	2.25	4.34	4.34
MS	28	8.37	2.85	2.63	1.51	2.27	-3.22	-4.58	-6.02	-6.02
MO	29	11.21	3.00	2.50	1.51	2.30	1.61	-1.71	-4.42	-4.42
MT	30	5.94	2.71	2.41	1.51	2.17	-7.52	-7.00	-10.32	-10.32
NE	31	4.25	2.67	2.44	1.51	2.16	-5.03	-7.88	-10.94	-10.94
NV	32	4.95	4.50	5.11	1.51	3.42	18.89	31.33	64.23	64.23
NH	33	2.45	4.37	2.94	1.51	2.93	19.31	28.05	30.02	30.02
NJ	34	16.90	3.08	2.76	1.51	2.39	0.14	-0.13	-0.39	-0.39
NM	35	2.95	3.91	3.05	1.51	2.77	11.84	17.30	20.34	20.34
NY	36	34.31	2.93	2.84	1.51	2.34	-1.50	-2.93	-2.42	-2.42
NC	37	27.71	3.23	2.56	1.51	2.41	5.29	2.76	0.52	0.52
ND	38	1.61	2.51	2.20	1.51	2.05	-4.54	-10.59	-15.55	-15.55
OH	39	58.31	2.60	2.56	1.51	2.16	-6.71	-9.07	-11.05	-11.05
OK	40	10.36	3.43	3.02	1.51	2.60	0.93	7.94	10.46	10.46
OR	41	14.01	3.00	2.87	1.51	2.38	-4.46	-1.70	-0.90	-0.90
PA	42	48.26	2.44	2.65	1.51	2.11	-8.24	-11.87	-13.02	-13.02
RI	44	1.44	2.76	1.53	1.51	2.01	-2.55	-6.16	-17.03	-17.03
SC	45	17.95	3.03	2.49	1.51	2.33	2.29	-0.17	-2.96	-2.96
SD	46	1.34	2.37	1.97	1.51	1.94	-7.03	-13.11	-19.76	-19.76
TN	47	35.41	3.12	2.68	1.51	2.39	3.91	0.64	-0.35	-0.35
TX	48	90.54	3.19	2.96	1.51	2.47	1.81	2.05	3.80	3.80
UT	49	4.53	4.05	3.30	1.51	2.88	14.36	20.31	26.52	26.52
VT	50	1.30	4.10	3.06	1.51	2.85	11.14	21.60	24.93	24.93
VA	51	14.12	3.17	2.64	1.51	2.40	4.20	1.65	0.29	0.29
WA	53	32.46	3.24	2.83	1.51	2.47	-0.84	2.95	3.95	3.95
WV	54	11.84	2.46	2.64	1.51	2.12	-12.02	-11.53	-12.73	-12.73
WI	55	15.37	2.57	2.79	1.51	2.19	-6.13	-9.64	-9.55	-9.55
WY	56	4.70	2.39	2.39	1.51	2.04	-9.48	-12.69	-15.99	-15.99
US		889.95	3.09	2.78	1.51	2.39				

		1980	1985	1990	1995	2000	2005	2010	2015	2020	2025	2030
AL	1	53.3	59.0	71.8	81.1	91.0	101.5	114.8	122.8	130.8	139.7	148.6
AK	2	3.2	4.1	4.4	5.2	5.6	6.3	6.5	6.9	7.2	7.7	8.1
AZ	4	27.3	35.1	41.7	49.7	57.8	65.7	74.4	78.6	82.9	87.2	91.6
AR	5	28.0	31.6	37.7	43.5	48.2	52.9	59.0	62.8	66.6	70.7	74.8
CA	6	168.9	201.8	239.7	278.9	315.4	350.0	390.9	413.0	435.0	458.3	481.6
CO	8	21.1	26.1	31.0	35.9	40.9	45.8	51.8	54.8	57.9	61.1	64.3
CT	9	21.4	24.1	27.7	31.9	35.4	38.5	42.6	45.0	47.5	50.0	52.5
DE	10	5.9	6.7	7.8	8.9	9.9	10.9	12.2	13.0	13.7	14.5	15.4
DC	11	7.0	6.9	7.2	8.0	9.2	10.3	11.6	12.2	12.9	13.7	14.4
FL	12	93.8	118.5	141.0	164.3	189.0	214.3	244.8	258.8	272.7	286.4	300.1
GA	13	54.2	64.6	75.8	85.3	94.9	104.5	116.8	124.0	131.2	138.8	146.4
HI	15	6.6	6.9	8.3	9.6	10.7	11.7	13.0	13.8	14.6	15.5	16.4
ID	16	13.9	15.7	18.2	20.8	22.9	24.8	27.3	29.0	30.7	32.5	34.3
IL	17	98.5	102.7	115.9	127.7	139.5	150.9	165.3	175.0	184.7	195.1	205.5
IN	18	63.9	68.2	80.5	90.6	99.2	108.3	119.8	128.0	136.1	145.1	154.2
IA	19	25.3	26.1	29.1	32.1	34.8	37.4	40.9	43.4	46.0	48.6	51.3
KS	20	21.9	24.3	27.9	31.7	35.2	39.1	44.2	46.8	49.4	52.2	55.0
KY	21	49.8	53.4	64.0	72.8	81.9	91.7	103.7	110.8	118.0	125.9	133.9
LA	22	63.2	66.6	79.2	91.5	102.6	113.8	128.8	137.2	145.7	154.8	164.0
ME	23	12.1	13.4	16.5	19.2	21.5	24.1	27.3	29.2	31.1	33.2	35.4
MD	24	34.8	38.5	43.8	49.0	54.7	60.2	67.2	71.2	75.2	79.5	83.7
MA	25	33.7	33.2	44.2	51.1	56.3	60.9	67.1	70.8	74.5	78.4	82.2
MI	26	72.5	78.6	89.8	99.0	109.3	120.2	133.2	141.9	150.6	160.1	169.7
MN	27	33.5	37.9	43.7	49.7	55.3	61.6	69.7	74.3	79.0	84.0	89.0
MS	28	23.4	25.4	28.9	32.3	35.7	39.1	43.4	46.1	48.8	51.6	54.4
MO	29	42.8	47.2	52.5	57.6	62.4	66.9	73.0	77.1	81.3	85.6	89.9
MT	30	10.9	11.5	13.7	15.8	17.6	19.1	21.2	22.6	24.0	25.6	27.1
NE	31	13.8	15.4	16.9	18.4	19.8	21.1	23.0	24.3	25.7	27.1	28.5
NV	32	10.4	12.1	16.2	20.1	23.4	28.0	34.8	37.1	39.4	41.9	44.4
NH	33	6.0	7.2	8.8	10.3	11.7	13.0	14.7	15.6	16.6	17.6	18.6
NJ	34	50.1	58.1	65.8	73.4	80.2	86.5	95.1	100.7	106.2	112.1	117.9
NM	35	8.8	10.7	12.6	14.7	16.7	18.7	21.1	22.3	23.5	24.7	26.0
NY	36	107.1	120.8	136.1	150.2	164.5	178.4	196.7	207.7	218.8	230.6	242.5
NC	37	66.3	76.2	89.8	101.2	112.4	123.7	138.2	146.9	155.6	164.8	174.0
ND	38	5.2	5.7	6.3	6.8	7.3	7.7	8.4	8.9	9.4	10.0	10.5
OH	39	115.0	121.0	140.1	156.1	171.2	186.9	207.1	220.8	234.5	249.7	264.8
OK	40	31.6	36.5	42.0	48.8	54.9	60.7	68.1	72.1	76.2	80.4	84.6
OR	41	38.0	40.5	46.9	54.6	60.8	66.8	74.7	79.3	83.8	88.6	93.4
PA	42	101.9	105.8	124.1	137.1	151.3	165.6	183.9	195.7	207.6	220.4	233.3
RI	44	5.2	5.8	6.5	7.3	7.8	8.1	8.6	9.0	9.5	10.0	10.5
SC	45	39.2	44.6	53.0	60.2	67.1	74.0	82.9	88.1	93.3	98.9	104.5
SD	46	5.1	5.6	6.0	6.6	7.0	7.3	7.9	8.3	8.8	9.3	9.7
TN	47	75.8	86.0	100.1	111.4	123.5	136.0	152.2	162.2	172.1	182.9	193.7
TX	48	191.6	223.4	266.0	307.9	345.1	384.0	435.0	462.4	489.9	519.6	549.2
UT	49	10.8	13.2	16.2	18.9	21.5	24.3	27.8	29.5	31.2	33.0	34.9
VT	50	4.0	4.5	5.4	6.3	7.1	7.8	8.7	9.3	9.8	10.4	10.9
VA	51	50.6	59.3	67.8	76.1	84.5	92.9	103.7	109.4	115.1	121.0	126.9
WA	53	70.6	77.3	91.4	106.4	120.1	133.2	150.1	159.9	169.7	180.2	190.8
WV	54	22.1	22.1	26.4	30.0	33.3	36.7	41.2	43.9	46.7	49.7	52.7
WI	55	38.9	42.4	47.8	52.5	57.7	62.9	69.6	73.9	78.2	82.8	87.4
WY	56	7.2	7.4	9.5	10.9	12.1	13.2	14.9	15.9	16.9	18.0	19.1
US		2166.2	2434.6	2843.9	3229.1	3593.0	3967.7	4438.5	4712.6	4986.7	5279.6	5572.6

TOTAL END-USE ELECTRICITY PROJECTIONS - STATE SHARES REFERENCE CASE ANL/ARAM/AUSM 3/19/86

		1980	1985	1990	1995	2000	2005	2010	2015	2020	2025	2030
AL	1	0.0246	0.0242	0.0252	0.0251	0.0253	0.0256	0.0259	0.0261	0.0262	0.0265	0.0267
AK	2	0.0015	0.0017	0.0015	0.0016	0.0016	0.0016	0.0015	0.0015	0.0015	0.0015	0.0014
AZ	4	0.0126	0.0144	0.0146	0.0154	0.0161	0.0165	0.0168	0.0167	0.0166	0.0165	0.0164
AR	5	0.0129	0.0130	0.0133	0.0135	0.0134	0.0133	0.0133	0.0133	0.0134	0.0134	0.0134
CA	6	0.0780	0.0829	0.0843	0.0864	0.0877	0.0882	0.0881	0.0876	0.0872	0.0868	0.0864
CO	8	0.0097	0.0107	0.0109	0.0111	0.0114	0.0116	0.0117	0.0116	0.0116	0.0116	0.0115
CT	9	0.0099	0.0099	0.0097	0.0099	0.0098	0.0097	0.0096	0.0096	0.0095	0.0095	0.0094
DE	10	0.0027	0.0028	0.0027	0.0028	0.0028	0.0028	0.0028	0.0028	0.0028	0.0028	0.0028
DC	11	0.0032	0.0029	0.0025	0.0025	0.0026	0.0026	0.0026	0.0026	0.0026	0.0026	0.0026
FL	12	0.0433	0.0487	0.0496	0.0509	0.0525	0.0540	0.0552	0.0549	0.0547	0.0543	0.0539
GA	13	0.0250	0.0265	0.0267	0.0264	0.0264	0.0263	0.0263	0.0263	0.0263	0.0263	0.0263
HI	15	0.0030	0.0029	0.0029	0.0030	0.0030	0.0030	0.0029	0.0029	0.0029	0.0029	0.0029
ID	16	0.0064	0.0065	0.0064	0.0064	0.0064	0.0062	0.0062	0.0062	0.0062	0.0062	0.0062
IL	17	0.0455	0.0422	0.0407	0.0395	0.0388	0.0380	0.0372	0.0371	0.0370	0.0370	0.0369
IN	18	0.0295	0.0280	0.0283	0.0280	0.0276	0.0273	0.0270	0.0272	0.0273	0.0275	0.0277
IA	19	0.0117	0.0107	0.0102	0.0099	0.0097	0.0094	0.0092	0.0092	0.0092	0.0092	0.0092
KS	20	0.0101	0.0100	0.0098	0.0098	0.0098	0.0098	0.0099	0.0099	0.0099	0.0099	0.0099
KY	21	0.0230	0.0219	0.0225	0.0225	0.0228	0.0231	0.0234	0.0235	0.0237	0.0238	0.0240
LA	22	0.0292	0.0273	0.0278	0.0283	0.0285	0.0287	0.0290	0.0291	0.0292	0.0293	0.0294
ME	23	0.0056	0.0055	0.0058	0.0059	0.0060	0.0061	0.0061	0.0062	0.0062	0.0063	0.0064
MD	24	0.0161	0.0158	0.0154	0.0152	0.0152	0.0152	0.0151	0.0151	0.0151	0.0150	0.0150
MA	25	0.0156	0.0157	0.0155	0.0158	0.0157	0.0153	0.0151	0.0150	0.0149	0.0148	0.0148
MI	26	0.0335	0.0323	0.0316	0.0306	0.0304	0.0303	0.0300	0.0301	0.0302	0.0303	0.0304
MN	27	0.0155	0.0156	0.0154	0.0154	0.0154	0.0155	0.0157	0.0158	0.0158	0.0159	0.0160
MS	28	0.0108	0.0104	0.0102	0.0100	0.0099	0.0098	0.0098	0.0098	0.0098	0.0098	0.0098
MO	29	0.0193	0.0194	0.0185	0.0178	0.0174	0.0169	0.0164	0.0164	0.0163	0.0162	0.0161
MT	30	0.0051	0.0047	0.0048	0.0049	0.0049	0.0048	0.0048	0.0048	0.0048	0.0048	0.0049
NE	31	0.0064	0.0063	0.0059	0.0057	0.0055	0.0053	0.0052	0.0052	0.0051	0.0051	0.0051
NV	32	0.0048	0.0050	0.0057	0.0062	0.0065	0.0070	0.0078	0.0079	0.0079	0.0079	0.0080
NH	33	0.0028	0.0030	0.0031	0.0032	0.0032	0.0033	0.0033	0.0033	0.0033	0.0033	0.0033
NJ	34	0.0231	0.0239	0.0231	0.0227	0.0223	0.0218	0.0214	0.0214	0.0213	0.0212	0.0212
NM	35	0.0040	0.0044	0.0044	0.0045	0.0046	0.0047	0.0047	0.0047	0.0047	0.0047	0.0047
NY	36	0.0494	0.0496	0.0479	0.0465	0.0457	0.0450	0.0443	0.0441	0.0439	0.0437	0.0435
NC	37	0.0306	0.0313	0.0316	0.0313	0.0312	0.0312	0.0311	0.0312	0.0312	0.0312	0.0312
ND	38	0.0024	0.0024	0.0022	0.0021	0.0020	0.0020	0.0019	0.0019	0.0019	0.0019	0.0019
OH	39	0.0531	0.0497	0.0493	0.0483	0.0476	0.0471	0.0466	0.0469	0.0470	0.0473	0.0475
OK	40	0.0146	0.0150	0.0148	0.0151	0.0153	0.0153	0.0153	0.0153	0.0153	0.0152	0.0152
OR	41	0.0175	0.0166	0.0165	0.0169	0.0169	0.0168	0.0168	0.0168	0.0168	0.0168	0.0168
PA	42	0.0470	0.0434	0.0437	0.0425	0.0421	0.0417	0.0414	0.0415	0.0416	0.0417	0.0419
RI	44	0.0024	0.0024	0.0023	0.0022	0.0022	0.0020	0.0019	0.0019	0.0019	0.0019	0.0019
SC	45	0.0181	0.0183	0.0187	0.0187	0.0186	0.0187	0.0187	0.0187	0.0187	0.0187	0.0188
SD	46	0.0023	0.0023	0.0021	0.0020	0.0019	0.0019	0.0018	0.0018	0.0018	0.0018	0.0017
TN	47	0.0350	0.0353	0.0352	0.0345	0.0343	0.0343	0.0343	0.0344	0.0345	0.0346	0.0348
TX	48	0.0884	0.0918	0.0935	0.0953	0.0959	0.0968	0.0980	0.0981	0.0982	0.0984	0.0986
UT	49	0.0050	0.0054	0.0057	0.0058	0.0060	0.0061	0.0063	0.0063	0.0063	0.0063	0.0063
VT	50	0.0018	0.0019	0.0019	0.0019	0.0020	0.0020	0.0020	0.0020	0.0020	0.0020	0.0020
VA	51	0.0234	0.0243	0.0238	0.0236	0.0235	0.0234	0.0234	0.0232	0.0231	0.0229	0.0228
WA	53	0.0326	0.0317	0.0321	0.0330	0.0334	0.0336	0.0338	0.0339	0.0340	0.0341	0.0342
WV	54	0.0102	0.0091	0.0093	0.0093	0.0093	0.0093	0.0093	0.0093	0.0094	0.0094	0.0095
WI	55	0.0180	0.0174	0.0168	0.0163	0.0160	0.0158	0.0157	0.0157	0.0157	0.0157	0.0157
WY	56	0.0033	0.0030	0.0033	0.0034	0.0034	0.0033	0.0034	0.0034	0.0034	0.0034	0.0034
US		1.0000	1.0000	1.0000	1.0000	1.0000	1.0000	1.0000	1.0000	1.0000	1.0000	1.0000

TOTAL END-USE ELECTRICITY PROJECTIONS - AVERAGE ANNUAL GROWTH RATES (%) REFERENCE CASE ANL/ARAH/AUSM 3/19/86

		1980-1985	1985-1990	1990-1995	1995-2000	2000-2005	2005-2010	2010-2015	2015-2020	2020-2025	2025-2030
AL	1	2.06	3.98	2.47	2.33	2.21	2.50	1.36	1.27	1.32	1.24
AK	2	4.99	1.57	3.28	1.79	2.16	0.53	1.19	1.13	1.12	1.06
AZ	4	5.17	3.48	3.60	3.06	2.59	2.53	1.12	1.06	1.04	0.99
AR	5	2.39	3.62	2.90	2.09	1.84	2.21	1.27	1.19	1.20	1.13
CA	6	3.63	3.50	3.07	2.49	2.10	2.24	1.10	1.05	1.05	1.00
CO	8	4.36	3.53	2.98	2.62	2.31	2.49	1.14	1.08	1.03	1.03
CT	9	2.48	2.81	2.84	2.13	1.67	2.06	1.11	1.05	1.04	0.99
DE	10	2.71	2.96	2.71	2.20	1.93	2.24	1.21	1.14	1.16	1.10
DC	11	-0.19	0.87	2.00	2.83	2.32	2.32	1.14	1.08	1.15	1.08
FL	12	4.78	3.55	3.11	2.84	2.55	2.70	1.11	1.06	0.98	0.94
GA	13	3.58	3.25	2.40	2.15	1.94	2.25	1.21	1.14	1.13	1.07
HI	15	1.00	3.65	2.93	2.18	1.87	2.06	1.24	1.16	1.18	1.11
ID	16	2.53	2.95	2.73	1.92	1.58	2.00	1.20	1.13	1.14	1.08
IL	17	0.83	2.45	1.96	1.79	1.58	1.83	1.15	1.09	1.10	1.04
IN	18	1.31	3.36	2.40	1.85	1.76	2.04	1.33	1.25	1.29	1.21
IA	19	0.59	2.23	1.95	1.63	1.48	1.81	1.20	1.14	1.13	1.07
KS	20	2.07	2.83	2.60	2.12	2.09	2.48	1.16	1.10	1.11	1.05
KY	21	1.42	3.71	2.60	2.38	2.28	2.50	1.34	1.25	1.31	1.23
LA	22	1.04	3.53	2.94	2.31	2.11	2.50	1.27	1.20	1.23	1.16
ME	23	2.07	4.28	2.97	2.37	2.24	2.54	1.36	1.28	1.34	1.26
MD	24	2.02	2.62	2.27	2.20	1.94	2.22	1.17	1.11	1.11	1.05
MA	25	2.54	2.94	2.95	1.98	1.57	1.96	1.08	1.02	1.02	0.97
MI	26	1.63	2.69	1.97	2.01	1.91	2.09	1.27	1.20	1.23	1.16
MN	27	2.48	2.93	2.59	2.16	2.18	2.49	1.30	1.22	1.24	1.17
MS	28	1.65	2.60	2.22	2.05	1.83	2.13	1.22	1.15	1.12	1.06
MO	29	1.99	2.13	1.88	1.62	1.40	1.74	1.12	1.06	1.03	0.98
MT	30	1.00	3.56	2.93	2.10	1.65	2.17	1.29	1.21	1.26	1.18
NE	31	2.19	1.84	1.78	1.48	1.28	1.69	1.14	1.08	1.07	1.01
NV	32	3.03	6.08	4.37	3.03	3.65	4.47	1.30	1.22	1.24	1.16
NH	33	3.71	4.01	3.13	2.59	2.17	2.43	1.27	1.19	1.20	1.13
NJ	34	3.01	2.52	2.20	1.78	1.52	1.93	1.13	1.07	1.08	1.03
NM	35	4.06	3.30	3.12	2.62	2.29	2.43	1.11	1.05	1.06	1.01
NY	36	2.43	2.42	2.00	1.84	1.63	1.96	1.10	1.04	1.06	1.01
NC	37	2.82	3.34	2.41	2.13	1.93	2.25	1.22	1.15	1.16	1.09
ND	38	1.98	1.98	1.42	1.53	1.15	1.68	1.19	1.13	1.08	1.03
OH	39	1.03	2.97	2.19	1.86	1.77	2.07	1.29	1.21	1.26	1.18
OK	40	2.93	2.87	3.01	2.40	2.04	2.31	1.16	1.10	1.08	1.03
OR	41	1.28	3.00	3.06	2.18	1.90	2.27	1.19	1.12	1.12	1.06
PA	42	0.75	3.25	2.01	1.99	1.81	2.12	1.26	1.18	1.21	1.14
RI	44	2.19	2.38	2.33	1.41	0.74	1.22	1.06	1.01	1.00	0.95
SC	45	2.62	3.53	2.57	2.18	1.99	2.28	1.23	1.16	1.17	1.11
SD	46	1.78	1.64	1.71	1.27	1.02	1.37	1.15	1.09	1.03	0.98
TN	47	2.57	3.08	2.16	2.08	1.94	2.28	1.28	1.20	1.22	1.15
TX	48	3.12	3.55	2.97	2.31	2.16	2.52	1.23	1.16	1.18	1.12
UT	49	4.11	4.19	3.13	2.69	2.47	2.69	1.20	1.13	1.16	1.09
VT	50	2.55	3.50	3.16	2.32	2.04	2.26	1.21	1.14	1.13	1.07
VA	51	3.20	2.73	2.33	2.12	1.91	2.22	1.08	1.03	1.00	0.95
WA	53	1.82	3.42	3.08	2.44	2.09	2.43	1.27	1.20	1.21	1.14
WV	54	-0.03	3.69	2.57	2.09	1.98	2.30	1.31	1.23	1.26	1.19
WI	55	1.70	2.43	1.90	1.90	1.74	2.06	1.21	1.14	1.15	1.09
WY	56	0.45	5.06	2.90	2.09	1.70	2.43	1.31	1.23	1.29	1.21
US		2.36	3.16	2.57	2.19	1.98	2.27	1.21	1.14	1.15	1.09

TOTAL END-USE ELECTRICITY PROJECTIONS - SUMMARY TABLE

REFERENCE CASE ANL/ARAM/AUSM 3/19/86

		BASE YEAR VALUE (10**9 KWH)	AVERAGE ANNUAL GROWTH RATES (%)				RELATIVE GROWTH FROM 1980 MEASURED BY CHANGE IN SHARE (%)			
		1980	1980-2000	2000-2010	2010-2030	1980-2030	1990	2000	2010	2030
AL	1	53.33	2.71	2.36	1.30	2.07	2.52	2.69	5.08	8.33
AK	2	3.19	2.90	1.34	1.12	1.87	5.05	6.63	-1.23	-1.60
AZ	4	27.29	3.82	2.56	1.05	2.45	16.28	27.50	33.03	30.54
AR	5	28.04	2.75	2.03	1.20	1.98	2.44	3.60	2.65	3.77
CA	6	168.92	3.17	2.17	1.05	2.12	8.09	12.42	12.95	10.82
CO	8	21.06	3.37	2.40	1.08	2.26	12.15	16.87	20.08	18.61
CT	9	21.36	2.56	1.86	1.05	1.82	-1.14	-0.11	-2.61	-4.42
DE	10	5.90	2.64	2.08	1.16	1.93	0.69	1.40	1.02	1.25
DC	11	7.01	1.37	2.32	1.11	1.46	-21.22	-20.94	-19.39	-19.87
FL	12	93.79	3.57	2.62	1.02	2.35	14.51	21.34	27.41	24.40
GA	13	54.19	2.84	2.10	1.14	2.01	6.54	5.43	5.18	5.02
HI	15	6.61	2.43	1.97	1.17	1.83	-4.21	-2.60	-4.07	-3.54
ID	16	13.88	2.53	1.79	1.14	1.82	-0.17	-0.71	-3.87	-4.02
IL	17	98.49	1.76	1.71	1.09	1.48	-10.39	-14.71	-18.11	-18.90
IN	18	63.90	2.23	1.90	1.27	1.78	-4.10	-6.50	-8.51	-6.22
IA	19	25.30	1.60	1.65	1.13	1.42	-12.37	-17.31	-21.06	-21.23
KS	20	21.89	2.41	2.29	1.11	1.86	-2.96	-3.15	-1.58	-2.32
KY	21	49.76	2.52	2.39	1.28	2.00	-1.96	-0.92	1.73	4.58
LA	22	63.23	2.45	2.30	1.22	1.92	-4.61	-2.33	-0.57	0.84
ME	23	12.11	2.92	2.39	1.31	2.17	4.07	7.02	9.90	13.59
MD	24	34.85	2.28	2.08	1.11	1.77	-4.20	-5.58	-5.94	-6.62
MA	25	33.69	2.60	1.76	1.02	1.80	-0.16	0.69	-2.80	-5.11
MI	26	72.51	2.07	2.00	1.22	1.71	-5.70	-9.23	-10.32	-9.05
MN	27	33.49	2.54	2.34	1.23	1.97	-0.50	-0.53	1.59	3.35
MS	28	23.41	2.13	1.98	1.14	1.70	-5.98	-8.21	-9.48	-9.60
MO	29	42.81	1.90	1.57	1.05	1.50	-6.62	-12.19	-16.82	-18.35
MT	30	10.94	2.39	1.91	1.24	1.83	-4.66	-3.40	-5.39	-3.65
NE	31	13.81	1.82	1.49	1.08	1.46	-7.01	-13.60	-18.82	-19.89
NV	32	10.42	4.12	4.06	1.23	2.94	18.83	35.07	62.99	65.80
NH	33	6.04	3.36	2.30	1.20	2.28	11.21	16.53	18.62	19.88
NJ	34	50.12	2.38	1.72	1.08	1.73	0.06	-3.68	-7.36	-8.52
NM	35	8.76	3.27	2.36	1.06	2.20	9.33	14.67	17.33	15.34
NY	36	107.10	2.17	1.80	1.05	1.65	-3.21	-7.50	-10.38	-11.98
NC	37	66.30	2.67	2.09	1.16	1.95	3.15	2.08	1.76	2.01
ND	38	5.19	1.73	1.42	1.11	1.42	-7.33	-15.21	-20.89	-21.47
OH	39	114.97	2.01	1.92	1.24	1.68	-7.19	-10.36	-12.11	-10.47
OK	40	31.59	2.80	2.18	1.09	1.99	1.35	4.59	5.15	4.06
OR	41	37.99	2.38	2.08	1.12	1.82	-5.89	-3.67	-4.04	-4.43
PA	42	101.89	2.00	1.97	1.20	1.67	-7.19	-10.58	-11.92	-11.00
RI	44	5.16	2.08	0.98	1.01	1.43	-4.54	-9.17	-18.85	-21.05
SC	45	39.19	2.72	2.13	1.17	1.98	3.10	3.08	3.18	3.64
SD	46	5.09	1.60	1.19	1.06	1.30	-9.76	-17.32	-24.53	-25.77
TN	47	75.79	2.47	2.11	1.21	1.89	0.64	-1.89	-2.00	-0.65
TX	48	191.59	2.99	2.34	1.17	2.13	5.76	8.46	10.80	11.43
UT	49	10.76	3.53	2.58	1.15	2.38	14.38	20.45	25.94	25.99
VT	50	3.99	2.88	2.15	1.14	2.04	2.63	6.33	6.60	6.45
VA	51	50.62	2.59	2.07	1.02	1.85	2.01	0.49	-0.04	-2.56
WA	53	70.62	2.69	2.26	1.20	2.01	-1.39	2.36	3.75	5.00
WV	54	22.10	2.07	2.14	1.25	1.75	-8.86	-9.30	-9.10	-7.26
WI	55	38.95	1.98	1.90	1.14	1.63	-6.52	-10.84	-12.77	-12.75
WY	56	7.24	2.61	2.07	1.26	1.96	-0.27	0.85	0.31	2.56
US		2166.24	2.57	2.12	1.14	1.91				

A.2 LOW SCENARIO

RESIDENTIAL ELECTRICITY PROJECTIONS (10**9 KWH) LOW CASE ANL/ARAM/AUSM 3/19/86

		1980	1985	1990	1995	2000	2005	2010	2015	2020	2025	2030
AL	1	16.5	17.4	18.6	19.6	20.9	22.4	24.1	25.0	25.8	23.4	21.0
AK	2	1.1	1.4	1.5	1.6	1.8	2.0	2.1	2.2	2.3	2.1	1.8
AZ	4	9.6	11.4	13.6	15.6	17.8	20.4	23.2	24.0	24.8	22.5	20.2
AR	5	10.2	11.0	12.1	13.3	14.4	15.6	17.0	17.6	18.2	16.5	14.8
CA	6	52.0	59.0	66.9	73.9	81.6	90.0	99.0	102.5	106.0	96.1	86.3
CO	8	6.7	7.8	8.8	9.9	11.1	12.5	14.0	14.5	15.0	13.6	12.2
CT	9	8.2	8.7	9.4	10.1	10.9	11.8	12.8	13.2	13.7	12.4	11.1
DE	10	1.9	2.0	2.2	2.3	2.5	2.7	3.0	3.1	3.2	2.9	2.6
DC	11	1.1	1.1	1.2	1.2	1.3	1.4	1.5	1.5	1.6	1.4	1.3
FL	12	44.7	53.1	62.6	71.8	82.0	94.1	107.0	110.8	114.6	103.9	93.3
GA	13	20.0	22.4	25.0	27.3	29.8	32.8	36.1	37.4	38.7	35.1	31.5
HI	15	1.8	2.1	2.3	2.6	2.8	3.1	3.5	3.6	3.7	3.4	3.0
ID	16	4.9	5.4	5.8	6.3	6.7	7.1	7.7	7.9	8.2	7.4	6.7
IL	17	29.9	30.9	32.5	33.9	35.7	37.9	40.4	41.8	43.3	39.2	35.2
IN	18	19.3	19.8	20.8	21.6	22.5	23.7	24.9	25.8	26.7	24.2	21.7
IA	19	10.0	10.2	10.6	10.9	11.4	11.9	12.6	13.0	13.4	12.2	10.9
KS	20	7.2	7.6	8.2	8.6	9.1	9.7	10.5	10.9	11.2	10.2	9.1
KY	21	13.1	13.7	14.7	15.5	16.6	17.8	19.3	19.9	20.6	18.7	16.8
LA	22	16.8	18.8	20.4	22.8	25.2	27.7	30.7	31.8	32.9	29.8	26.7
ME	23	3.0	3.2	3.5	3.8	4.1	4.4	4.8	5.0	5.1	4.6	4.2
MD	24	12.1	13.0	14.1	15.1	16.2	17.6	19.2	19.8	20.5	18.6	16.7
MA	25	11.6	12.1	13.2	14.2	15.3	16.4	17.8	18.4	19.1	17.3	15.5
MI	26	22.3	22.5	23.6	24.3	25.6	26.9	28.6	29.6	30.6	27.8	24.9
MN	27	11.7	12.4	13.3	14.0	15.0	16.2	17.5	18.1	18.8	17.0	15.3
MS	28	10.0	10.6	11.3	12.0	12.9	13.9	15.1	15.7	16.2	14.7	13.2
MO	29	18.6	19.5	20.5	21.2	22.1	23.2	24.5	25.4	26.3	23.8	21.4
MT	30	2.9	3.1	3.4	3.7	3.9	4.1	4.4	4.5	4.7	4.3	3.8
NE	31	5.5	5.8	6.0	6.1	6.4	6.6	6.9	7.2	7.4	6.7	6.0
NV	32	3.7	4.4	5.3	6.4	7.5	8.8	10.2	10.6	10.9	9.9	8.9
NH	33	2.5	2.7	3.1	3.3	3.7	4.0	4.5	4.6	4.8	4.3	3.9
NJ	34	16.3	17.3	18.7	19.8	20.7	21.8	23.2	24.0	24.9	22.5	20.2
NM	35	2.5	2.8	3.2	3.6	4.1	4.6	5.1	5.3	5.5	5.0	4.5
NY	36	30.6	32.1	34.3	35.9	37.8	40.1	42.9	44.5	46.0	41.7	37.4
NC	37	24.4	26.6	29.1	31.2	33.6	36.4	39.6	41.0	42.4	38.5	34.6
ND	38	2.5	2.6	2.7	2.8	2.9	3.1	3.3	3.4	3.5	3.2	2.8
OH	39	33.5	34.3	35.9	37.2	38.8	40.9	43.4	44.9	46.5	42.1	37.8
OK	40	12.3	14.1	15.2	16.8	18.3	19.9	21.8	22.6	23.3	21.2	19.0
OR	41	13.5	14.2	15.6	17.2	18.7	20.3	22.0	22.8	23.6	21.4	19.2
PA	42	31.8	32.7	34.7	36.3	38.2	40.3	43.0	44.5	46.0	41.7	37.5
RI	44	1.8	1.9	2.0	2.1	2.2	2.3	2.5	2.6	2.6	2.4	2.2
SC	45	12.6	13.9	15.4	16.8	18.3	20.0	22.0	22.8	23.6	21.4	19.2
SD	46	2.6	2.7	2.8	2.9	3.0	3.1	3.3	3.4	3.5	3.2	2.8
TN	47	26.2	27.9	29.8	31.3	33.2	35.6	38.4	39.7	41.1	37.3	33.4
TX	48	57.2	66.7	73.8	82.1	90.4	99.3	109.4	113.3	117.2	106.3	95.4
UT	49	3.1	3.7	4.3	4.8	5.3	5.9	6.6	6.8	7.1	6.4	5.8
VT	50	1.8	1.9	2.1	2.3	2.5	2.7	2.9	3.0	3.1	2.8	2.5
VA	51	19.7	21.6	23.7	25.6	27.8	30.4	33.3	34.5	35.7	32.4	29.1
WA	53	24.4	26.5	28.9	31.8	34.7	37.6	40.9	42.3	43.8	39.7	35.6
WV	54	6.6	6.9	7.4	7.8	8.2	8.8	9.5	9.8	10.2	9.2	8.3
WI	55	13.6	14.2	15.0	15.6	16.5	17.4	18.6	19.2	19.9	18.0	16.2
WY	56	1.4	1.6	1.8	2.0	2.2	2.4	2.7	2.8	2.9	2.6	2.3
US		717.5	779.3	851.0	919.0	994.0	1080.0	1177.0	1218.6	1260.3	1143.0	1025.8

RESIDENTIAL ELECTRICITY PROJECTIONS - STATE SHARES LOW CASE ANL/ARAM/AUSM 3/19/86

		1980	1985	1990	1995	2000	2005	2010	2015	2020	2025	2030
AL	1	0.0230	0.0223	0.0218	0.0214	0.0210	0.0207	0.0205	0.0205	0.0205	0.0205	0.0205
AK	2	0.0015	0.0018	0.0017	0.0017	0.0018	0.0018	0.0018	0.0018	0.0018	0.0018	0.0018
AZ	4	0.0134	0.0147	0.0159	0.0169	0.0179	0.0189	0.0197	0.0197	0.0197	0.0197	0.0197
AR	5	0.0143	0.0141	0.0143	0.0144	0.0145	0.0144	0.0144	0.0144	0.0144	0.0144	0.0144
CA	6	0.0725	0.0757	0.0787	0.0805	0.0821	0.0833	0.0841	0.0841	0.0841	0.0841	0.0841
CO	8	0.0093	0.0100	0.0104	0.0108	0.0112	0.0116	0.0119	0.0119	0.0119	0.0119	0.0119
CT	9	0.0115	0.0111	0.0110	0.0110	0.0109	0.0109	0.0108	0.0108	0.0108	0.0108	0.0108
DE	10	0.0026	0.0026	0.0025	0.0025	0.0025	0.0025	0.0025	0.0025	0.0025	0.0025	0.0025
DC	11	0.0015	0.0014	0.0014	0.0013	0.0013	0.0013	0.0013	0.0013	0.0013	0.0013	0.0013
FL	12	0.0624	0.0681	0.0736	0.0781	0.0825	0.0871	0.0909	0.0909	0.0909	0.0909	0.0909
GA	13	0.0279	0.0288	0.0294	0.0297	0.0300	0.0303	0.0307	0.0307	0.0307	0.0307	0.0307
HI	15	0.0026	0.0027	0.0027	0.0028	0.0029	0.0029	0.0030	0.0030	0.0030	0.0030	0.0030
ID	16	0.0069	0.0069	0.0068	0.0068	0.0067	0.0066	0.0065	0.0065	0.0065	0.0065	0.0065
IL	17	0.0417	0.0396	0.0382	0.0369	0.0359	0.0350	0.0343	0.0343	0.0343	0.0343	0.0343
IN	18	0.0268	0.0254	0.0244	0.0235	0.0226	0.0219	0.0212	0.0212	0.0212	0.0212	0.0212
IA	19	0.0140	0.0131	0.0124	0.0119	0.0114	0.0110	0.0107	0.0107	0.0107	0.0107	0.0107
KS	20	0.0100	0.0098	0.0096	0.0094	0.0092	0.0090	0.0089	0.0089	0.0089	0.0089	0.0089
KY	21	0.0182	0.0176	0.0172	0.0169	0.0167	0.0165	0.0164	0.0164	0.0164	0.0164	0.0164
LA	22	0.0235	0.0241	0.0240	0.0248	0.0253	0.0257	0.0261	0.0261	0.0261	0.0261	0.0261
ME	23	0.0042	0.0041	0.0041	0.0041	0.0041	0.0041	0.0041	0.0041	0.0041	0.0041	0.0041
MD	24	0.0169	0.0166	0.0166	0.0164	0.0163	0.0163	0.0163	0.0163	0.0163	0.0163	0.0163
MA	25	0.0161	0.0156	0.0155	0.0154	0.0154	0.0152	0.0151	0.0151	0.0151	0.0151	0.0151
MI	26	0.0310	0.0288	0.0277	0.0265	0.0257	0.0249	0.0243	0.0243	0.0243	0.0243	0.0243
MN	27	0.0164	0.0159	0.0157	0.0153	0.0151	0.0150	0.0149	0.0149	0.0149	0.0149	0.0149
MS	28	0.0139	0.0136	0.0133	0.0131	0.0130	0.0129	0.0129	0.0129	0.0129	0.0129	0.0129
MO	29	0.0260	0.0250	0.0241	0.0231	0.0223	0.0215	0.0208	0.0208	0.0208	0.0208	0.0208
MT	30	0.0041	0.0040	0.0040	0.0040	0.0039	0.0038	0.0037	0.0037	0.0037	0.0037	0.0037
NE	31	0.0077	0.0074	0.0071	0.0067	0.0064	0.0061	0.0059	0.0059	0.0059	0.0059	0.0059
NV	32	0.0052	0.0057	0.0063	0.0069	0.0076	0.0082	0.0087	0.0087	0.0087	0.0087	0.0087
NH	33	0.0035	0.0035	0.0036	0.0036	0.0037	0.0037	0.0038	0.0038	0.0038	0.0038	0.0038
NJ	34	0.0228	0.0222	0.0220	0.0215	0.0209	0.0202	0.0197	0.0197	0.0197	0.0197	0.0197
NM	35	0.0034	0.0036	0.0038	0.0039	0.0041	0.0042	0.0043	0.0043	0.0043	0.0043	0.0043
NY	36	0.0426	0.0412	0.0404	0.0391	0.0380	0.0372	0.0365	0.0365	0.0365	0.0365	0.0365
NC	37	0.0340	0.0341	0.0342	0.0340	0.0338	0.0337	0.0337	0.0337	0.0337	0.0337	0.0337
ND	38	0.0034	0.0034	0.0032	0.0030	0.0029	0.0028	0.0028	0.0028	0.0028	0.0028	0.0028
OH	39	0.0466	0.0440	0.0422	0.0405	0.0390	0.0378	0.0369	0.0369	0.0369	0.0369	0.0369
OK	40	0.0172	0.0181	0.0179	0.0182	0.0184	0.0184	0.0185	0.0185	0.0185	0.0185	0.0185
OR	41	0.0189	0.0183	0.0184	0.0187	0.0188	0.0188	0.0187	0.0187	0.0187	0.0187	0.0187
PA	42	0.0443	0.0419	0.0407	0.0395	0.0384	0.0373	0.0365	0.0365	0.0365	0.0365	0.0365
RI	44	0.0026	0.0025	0.0024	0.0023	0.0023	0.0022	0.0021	0.0021	0.0021	0.0021	0.0021
SC	45	0.0175	0.0178	0.0181	0.0183	0.0184	0.0185	0.0187	0.0187	0.0187	0.0187	0.0187
SD	46	0.0037	0.0035	0.0033	0.0032	0.0030	0.0029	0.0028	0.0028	0.0028	0.0028	0.0028
TN	47	0.0365	0.0358	0.0350	0.0341	0.0334	0.0330	0.0326	0.0326	0.0326	0.0326	0.0326
TX	48	0.0797	0.0856	0.0867	0.0893	0.0909	0.0920	0.0930	0.0930	0.0930	0.0930	0.0930
UT	49	0.0043	0.0047	0.0050	0.0052	0.0054	0.0055	0.0056	0.0056	0.0056	0.0056	0.0056
VT	50	0.0025	0.0025	0.0025	0.0025	0.0025	0.0025	0.0025	0.0025	0.0025	0.0025	0.0025
VA	51	0.0275	0.0277	0.0278	0.0279	0.0279	0.0281	0.0283	0.0283	0.0283	0.0283	0.0283
WA	53	0.0341	0.0341	0.0340	0.0346	0.0349	0.0348	0.0347	0.0347	0.0347	0.0347	0.0347
WV	54	0.0092	0.0088	0.0086	0.0085	0.0083	0.0082	0.0081	0.0081	0.0081	0.0081	0.0081
WI	55	0.0190	0.0182	0.0177	0.0170	0.0166	0.0161	0.0158	0.0158	0.0158	0.0158	0.0158
WY	56	0.0020	0.0021	0.0021	0.0022	0.0023	0.0023	0.0023	0.0023	0.0023	0.0023	0.0023
US		1.0000	1.0000	1.0000	1.0000	1.0000	1.0000	1.0000	1.0000	1.0000	1.0000	1.0000

RESIDENTIAL ELECTRICITY PROJECTIONS - AVERAGE ANNUAL GROWTH RATES (%) LOW CASE ANL/ARAM/AUSM 3/19/86

		1980-1985	1985-1990	1990-1995	1995-2000	2000-2005	2005-2010	2010-2015	2015-2020	2020-2025	2025-2030
AL	1	1.10	1.31	1.12	1.26	1.38	1.48	0.70	0.67	-1.93	-2.14
AK	2	5.18	1.02	1.66	2.42	1.91	1.22	0.70	0.67	-1.93	-2.14
AZ	4	3.45	3.50	2.80	2.68	2.83	2.56	0.70	0.67	-1.93	-2.14
AR	5	1.50	1.95	1.83	1.62	1.61	1.71	0.70	0.67	-1.93	-2.14
CA	6	2.55	2.56	2.01	2.00	1.97	1.93	0.70	0.67	-1.93	-2.14
CO	8	3.02	2.61	2.31	2.37	2.38	2.23	0.70	0.67	-1.93	-2.14
CT	9	1.08	1.60	1.44	1.52	1.55	1.65	0.70	0.67	-1.93	-2.14
DE	10	1.33	1.63	1.44	1.52	1.69	1.79	0.70	0.67	-1.93	-2.14
DC	11	0.05	1.12	1.05	1.14	1.33	1.65	0.70	0.67	-1.93	-2.14
FL	12	3.48	3.35	2.77	2.69	2.79	2.61	0.70	0.67	-1.93	-2.14
GA	13	2.28	2.21	1.75	1.76	1.93	1.96	0.70	0.67	-1.93	-2.14
HI	15	2.41	2.40	1.99	1.99	2.07	2.05	0.70	0.67	-1.93	-2.14
ID	16	1.73	1.56	1.56	1.30	1.31	1.44	0.70	0.67	-1.93	-2.14
IL	17	0.63	1.05	0.83	1.02	1.19	1.31	0.70	0.67	-1.93	-2.14
IN	18	0.55	0.98	0.76	0.84	1.00	1.07	0.70	0.67	-1.93	-2.14
IA	19	0.35	0.72	0.61	0.84	0.91	1.05	0.70	0.67	-1.93	-2.14
KS	20	1.23	1.33	1.03	1.20	1.33	1.47	0.70	0.67	-1.93	-2.14
KY	21	1.00	1.32	1.13	1.35	1.45	1.55	0.70	0.67	-1.93	-2.14
LA	22	2.20	1.68	2.23	2.01	1.96	2.04	0.70	0.67	-1.93	-2.14
ME	23	1.16	1.80	1.59	1.56	1.63	1.69	0.70	0.67	-1.93	-2.14
MD	24	1.35	1.69	1.38	1.47	1.62	1.71	0.70	0.67	-1.93	-2.14
MA	25	0.93	1.71	1.44	1.50	1.49	1.61	0.70	0.67	-1.93	-2.14
MI	26	0.18	0.99	0.63	1.00	1.00	1.24	0.70	0.67	-1.93	-2.14
MN	27	1.05	1.48	1.06	1.40	1.52	1.55	0.70	0.67	-1.93	-2.14
MS	28	1.24	1.31	1.21	1.44	1.57	1.64	0.70	0.67	-1.93	-2.14
MO	29	0.89	1.02	0.67	0.84	0.95	1.13	0.70	0.67	-1.93	-2.14
MT	30	1.51	1.64	1.46	1.27	1.10	1.26	0.70	0.67	-1.93	-2.14
NE	31	0.94	0.88	0.35	0.65	0.77	0.96	0.70	0.67	-1.93	-2.14
NV	32	3.57	3.93	3.52	3.41	3.26	2.96	0.70	0.67	-1.93	-2.14
NH	33	1.98	2.27	1.83	1.84	1.96	1.95	0.70	0.67	-1.93	-2.14
NJ	34	1.19	1.54	1.15	0.92	1.04	1.24	0.70	0.67	-1.93	-2.14
NM	35	2.82	2.66	2.39	2.40	2.36	2.22	0.70	0.67	-1.93	-2.14
NY	36	0.97	1.36	0.90	1.03	1.21	1.36	0.70	0.67	-1.93	-2.14
NC	37	1.76	1.79	1.43	1.47	1.63	1.72	0.70	0.67	-1.93	-2.14
ND	38	1.35	0.83	0.43	0.89	1.02	1.16	0.70	0.67	-1.93	-2.14
OH	39	0.50	0.92	0.74	0.81	1.06	1.20	0.70	0.67	-1.93	-2.14
OK	40	2.73	1.60	1.90	1.74	1.75	1.80	0.70	0.67	-1.93	-2.14
OR	41	1.00	1.87	1.96	1.66	1.65	1.68	0.70	0.67	-1.93	-2.14
PA	42	0.53	1.18	0.95	0.98	1.12	1.28	0.70	0.67	-1.93	-2.14
RI	44	0.80	1.26	0.94	0.93	0.91	1.09	0.70	0.67	-1.93	-2.14
SC	45	2.01	2.08	1.72	1.71	1.87	1.91	0.70	0.67	-1.93	-2.14
SD	46	0.91	0.71	0.61	0.63	0.70	0.86	0.70	0.67	-1.93	-2.14
TN	47	1.23	1.33	1.01	1.20	1.39	1.50	0.70	0.67	-1.93	-2.14
TX	48	3.13	2.04	2.15	1.94	1.91	1.95	0.70	0.67	-1.93	-2.14
UT	49	3.41	3.01	2.25	2.22	2.21	2.12	0.70	0.67	-1.93	-2.14
VT	50	1.41	1.83	1.65	1.60	1.68	1.73	0.70	0.67	-1.93	-2.14
VA	51	1.84	1.82	1.61	1.63	1.80	1.89	0.70	0.67	-1.93	-2.14
WA	53	1.66	1.74	1.92	1.72	1.63	1.71	0.70	0.67	-1.93	-2.14
WV	54	0.76	1.41	1.08	1.15	1.37	1.50	0.70	0.67	-1.93	-2.14
WI	55	0.86	1.14	0.77	1.08	1.12	1.28	0.70	0.67	-1.93	-2.14
WY	56	2.57	2.62	2.37	1.83	1.73	1.82	0.70	0.67	-1.93	-2.14
US		1.67	1.77	1.55	1.58	1.67	1.73	0.70	0.67	-1.93	-2.14

RESIDENTIAL ELECTRICITY PROJECTIONS - SUMMARY TABLE

LOW CASE ANL/ARAM/AUSM 3/19/86

		BASE YEAR VALUE (10**9 KWH)	AVERAGE ANNUAL GROWTH RATES (%)				RELATIVE GROWTH FROM 1980 MEASURED BY CHANGE IN SHARE (%)			
		1980	1980-2000	2000-2010	2010-2030	1980-2030	1990	2000	2010	2030
AL	1	16.47	1.20	1.43	-0.69	0.49	-4.91	-8.38	-10.79	-10.79
AK	2	1.09	2.56	1.57	-0.69	1.05	14.23	19.71	18.10	18.10
AZ	4	9.64	3.10	2.69	-0.69	1.49	18.63	33.02	46.55	46.55
AR	5	10.23	1.72	1.66	-0.69	0.74	0.00	1.56	1.09	1.09
CA	6	52.01	2.28	1.95	-0.69	1.02	8.50	13.28	16.03	16.03
CO	8	6.69	2.53	2.30	-0.69	1.21	11.32	20.11	27.38	27.38
CT	9	8.22	1.41	1.60	-0.69	0.61	-3.66	-4.47	-5.40	-5.40
DE	10	1.87	1.48	1.74	-0.69	0.66	-2.35	-3.18	-2.82	-2.82
DC	11	1.09	0.84	1.49	-0.69	0.36	-10.63	-14.69	-16.45	-16.45
FL	12	44.75	3.07	2.70	-0.69	1.48	17.98	32.27	45.78	45.78
GA	13	20.03	2.00	1.94	-0.69	0.91	5.30	7.32	9.85	9.85
HI	15	1.84	2.20	2.06	-0.69	1.01	6.90	11.44	15.41	15.41
ID	16	4.94	1.53	1.37	-0.69	0.61	-0.77	-2.12	-5.27	-5.27
IL	17	29.93	0.88	1.25	-0.69	0.33	-8.34	-13.95	-17.72	-17.72
IN	18	19.26	0.78	1.04	-0.69	0.24	-9.02	-15.66	-21.04	-21.04
IA	19	10.04	0.63	0.98	-0.69	0.17	-11.07	-18.16	-23.78	-23.78
KS	20	7.19	1.20	1.40	-0.69	0.48	-4.22	-8.41	-11.13	-11.13
KY	21	13.08	1.20	1.50	-0.69	0.50	-5.37	-8.38	-10.18	-10.18
LA	22	16.83	2.03	2.00	-0.69	0.93	2.20	7.91	11.13	11.13
ME	23	3.00	1.53	1.66	-0.69	0.66	-2.34	-2.21	-2.65	-2.65
MD	24	12.12	1.47	1.67	-0.69	0.64	-1.94	-3.28	-3.65	-3.65
MA	25	11.57	1.39	1.55	-0.69	0.59	-3.88	-4.79	-6.26	-6.26
MI	26	22.26	0.70	1.12	-0.69	0.23	-10.64	-17.02	-21.65	-21.65
MN	27	11.75	1.24	1.53	-0.69	0.53	-4.41	-7.56	-9.11	-9.11
MS	28	9.96	1.30	1.61	-0.69	0.56	-4.31	-6.52	-7.42	-7.42
MO	29	18.65	0.86	1.04	-0.69	0.27	-7.25	-14.38	-19.81	-19.81
MT	30	2.92	1.47	1.18	-0.69	0.54	-1.39	-3.32	-8.21	-8.21
NE	31	5.52	0.70	0.87	-0.69	0.18	-7.69	-16.96	-23.56	-23.56
NV	32	3.70	3.61	3.11	-0.69	1.77	21.86	46.69	68.28	68.28
NH	33	2.48	1.98	1.96	-0.69	0.90	4.06	6.87	9.57	9.57
NJ	34	16.33	1.20	1.14	-0.69	0.43	-3.45	-8.38	-13.34	-13.34
NM	35	2.45	2.57	2.29	-0.69	1.20	10.48	19.87	26.96	26.96
NY	36	30.58	1.07	1.28	-0.69	0.40	-5.33	-10.78	-14.42	-14.42
NC	37	24.38	1.61	1.67	-0.69	0.70	0.53	-0.57	-0.86	-0.86
ND	38	2.46	0.87	1.09	-0.69	0.29	-6.05	-14.09	-19.10	-19.10
OH	39	33.46	0.74	1.13	-0.69	0.24	-9.54	-16.35	-20.95	-20.95
OK	40	12.31	1.99	1.78	-0.69	0.87	4.44	7.12	7.88	7.88
OR	41	13.55	1.62	1.67	-0.69	0.70	-2.78	-0.41	-0.79	-0.79
PA	42	31.77	0.92	1.20	-0.69	0.33	-7.99	-13.29	-17.52	-17.52
RI	44	1.84	0.98	1.00	-0.69	0.32	-6.59	-12.21	-18.09	-18.09
SC	45	12.58	1.88	1.89	-0.69	0.85	3.23	4.78	6.70	6.70
SD	46	2.62	0.72	0.78	-0.69	0.17	-8.59	-16.75	-24.01	-24.01
TN	47	26.21	1.19	1.45	-0.69	0.49	-4.21	-8.47	-10.77	-10.77
TX	48	57.18	2.32	1.93	-0.69	1.03	8.82	14.10	16.65	16.65
UT	49	3.12	2.72	2.17	-0.69	1.23	15.62	23.44	29.18	29.18
VT	50	1.78	1.62	1.71	-0.69	0.71	-0.99	-0.40	-0.38	-0.38
VA	51	19.73	1.72	1.85	-0.69	0.78	1.06	1.60	3.02	3.02
WA	53	24.45	1.76	1.67	-0.69	0.76	-0.20	2.34	1.98	1.98
WV	54	6.61	1.10	1.44	-0.69	0.45	-6.07	-10.13	-12.47	-12.47
WI	55	13.60	0.96	1.20	-0.69	0.35	-6.86	-12.57	-16.81	-16.81
WY	56	1.41	2.36	1.78	-0.69	1.01	8.89	15.07	15.88	15.88
US		717.50	1.64	1.70	-0.69	0.72				

CONMERCIAL ELECTRICITY PROJECTIONS (10**9 KWH) LOW CASE ANL/ARAM/AUSM 3/19/86

		1980	1985	1990	1995	2000	2005	2010	2015	2020	2025	2030
AL	1	7.2	8.4	8.2	8.8	9.5	10.0	10.5	10.7	11.0	11.3	11.6
AK	2	0.7	1.0	1.0	1.1	1.3	1.4	1.5	1.5	1.5	1.6	1.6
AZ	4	9.1	12.4	13.3	15.4	17.2	18.9	20.4	20.8	21.3	21.9	22.6
AR	5	5.3	6.6	6.5	7.3	7.8	8.1	8.5	8.7	8.9	9.2	9.4
CA	6	63.4	79.8	83.5	94.1	103.4	110.9	117.7	120.4	123.2	126.9	130.6
CO	8	7.2	9.4	9.9	11.1	12.2	13.2	14.0	14.4	14.7	15.1	15.6
CT	9	7.0	8.9	8.9	9.8	10.5	11.0	11.6	11.8	12.1	12.5	12.9
DE	10	1.5	1.9	1.9	2.1	2.3	2.4	2.6	2.6	2.7	2.8	2.8
DC	11	2.6	2.9	2.9	3.2	3.4	3.6	3.8	3.9	4.0	4.1	4.3
FL	12	27.3	37.5	39.0	43.9	48.2	52.7	56.9	58.2	59.6	61.4	63.2
GA	13	12.0	15.8	16.3	18.1	19.9	21.6	23.2	23.8	24.3	25.1	25.8
HI	15	1.5	1.8	1.8	2.0	2.1	2.3	2.4	2.4	2.5	2.6	2.7
ID	16	4.0	4.6	4.5	4.9	5.2	5.4	5.5	5.7	5.8	6.0	6.2
IL	17	31.6	36.5	35.7	38.0	39.9	41.5	43.0	44.0	45.0	46.4	47.7
IN	18	10.4	11.9	11.6	12.4	13.0	13.5	13.9	14.2	14.5	15.0	15.4
IA	19	5.5	6.3	6.1	6.6	7.1	7.5	7.8	8.0	8.2	8.4	8.7
KS	20	6.8	8.2	8.2	9.0	9.7	10.4	11.0	11.3	11.5	11.9	12.2
KY	21	8.4	9.8	9.5	10.3	11.2	11.8	12.4	12.7	13.0	13.4	13.8
LA	22	12.7	15.3	15.2	17.2	18.6	19.7	20.8	21.3	21.8	22.5	23.1
ME	23	1.7	2.1	2.1	2.3	2.5	2.6	2.7	2.8	2.9	3.0	3.0
MD	24	9.4	11.3	11.5	12.7	14.0	15.2	16.4	16.8	17.2	17.7	18.2
MA	25	13.2	16.1	16.1	17.7	18.9	19.9	20.9	21.3	21.8	22.5	23.1
MI	26	16.7	18.9	18.1	19.0	20.0	20.7	21.4	21.9	22.4	23.0	23.7
MN	27	5.7	7.0	7.0	7.7	8.3	8.9	9.4	9.6	9.8	10.1	10.4
MS	28	5.1	5.9	5.7	6.0	6.5	6.8	7.1	7.2	7.4	7.6	7.9
MO	29	12.9	15.0	14.6	15.8	16.9	17.7	18.5	18.9	19.3	19.9	20.5
MT	30	2.1	2.5	2.5	2.7	3.0	3.1	3.2	3.3	3.4	3.5	3.6
NE	31	4.0	5.0	4.8	5.1	5.3	5.4	5.5	5.6	5.8	6.0	6.1
NV	32	1.8	2.3	2.5	2.9	3.4	3.8	4.2	4.3	4.4	4.6	4.7
NH	33	1.1	1.5	1.5	1.7	1.8	1.9	2.0	2.1	2.1	2.2	2.3
NJ	34	16.9	22.0	21.9	23.3	24.5	25.1	26.0	26.6	27.2	28.0	28.8
NM	35	3.4	4.3	4.5	5.1	5.6	6.1	6.5	6.7	6.8	7.0	7.2
NY	36	42.2	52.0	51.1	54.1	56.8	59.1	61.5	62.9	64.3	66.3	68.2
NC	37	14.2	17.9	18.2	20.1	22.0	23.8	25.5	26.1	26.7	27.5	28.3
ND	38	1.1	1.4	1.3	1.4	1.4	1.4	1.4	1.4	1.5	1.5	1.6
OH	39	23.2	26.8	25.6	27.1	28.4	29.4	30.5	31.2	31.9	32.8	33.8
OK	40	8.9	11.4	11.3	12.8	13.9	14.8	15.7	16.0	16.4	16.9	17.4
OR	41	10.4	11.9	11.7	13.0	14.1	14.8	15.5	15.8	16.2	16.7	17.2
PA	42	21.9	25.8	25.5	27.4	29.0	30.4	31.6	32.4	33.1	34.1	35.1
RI	44	1.9	2.3	2.3	2.5	2.6	2.7	2.8	2.8	2.9	3.0	3.1
SC	45	8.7	10.9	11.1	12.4	13.6	14.7	15.8	16.1	16.5	17.0	17.5
SD	46	1.1	1.3	1.3	1.4	1.5	1.5	1.6	1.6	1.6	1.7	1.7
TN	47	14.2	17.7	17.3	18.6	20.1	21.2	22.2	22.7	23.2	24.0	24.7
TX	48	43.9	58.2	59.6	68.2	74.9	80.1	85.0	87.0	89.0	91.7	94.4
UT	49	3.1	4.0	4.3	4.9	5.4	5.8	6.2	6.4	6.5	6.7	6.9
VT	50	0.9	1.1	1.2	1.3	1.4	1.4	1.5	1.5	1.6	1.6	1.7
VA	51	16.8	21.3	22.0	24.7	27.3	29.8	32.3	33.0	33.8	34.8	35.8
WA	53	13.7	16.8	16.1	18.0	19.7	20.8	21.8	22.3	22.8	23.5	24.2
WV	54	3.7	4.3	4.3	4.7	5.0	5.3	5.6	5.8	5.9	6.1	6.2
WI	55	10.0	12.0	11.5	12.3	12.9	13.5	14.0	14.3	14.6	15.1	15.5
WY	56	1.1	1.5	1.6	1.9	2.1	2.2	2.3	2.3	2.4	2.5	2.5
US		558.8	691.5	694.0	764.0	825.0	876.0	924.0	945.6	967.2	996.5	1025.8

COMMERCIAL ELECTRICITY PROJECTIONS - STATE SHARES LOW CASE ANL/ARAM/AUSM 3/19/86

		1980	1985	1990	1995	2000	2005	2010	2015	2020	2025	2030
AL	1	0.0128	0.0121	0.0118	0.0115	0.0115	0.0114	0.0114	0.0114	0.0114	0.0114	0.0114
AK	2	0.0013	0.0015	0.0014	0.0015	0.0016	0.0016	0.0016	0.0016	0.0016	0.0016	0.0016
AZ	4	0.0162	0.0179	0.0192	0.0201	0.0209	0.0216	0.0220	0.0220	0.0220	0.0220	0.0220
AR	5	0.0095	0.0095	0.0094	0.0095	0.0094	0.0093	0.0092	0.0092	0.0092	0.0092	0.0092
CA	6	0.1134	0.1153	0.1203	0.1232	0.1253	0.1266	0.1274	0.1274	0.1274	0.1274	0.1274
CO	8	0.0130	0.0136	0.0142	0.0146	0.0148	0.0150	0.0152	0.0152	0.0152	0.0152	0.0152
CT	9	0.0126	0.0128	0.0129	0.0128	0.0127	0.0126	0.0125	0.0125	0.0125	0.0125	0.0125
DE	10	0.0027	0.0028	0.0028	0.0027	0.0027	0.0027	0.0028	0.0028	0.0028	0.0028	0.0028
DC	11	0.0046	0.0042	0.0042	0.0041	0.0041	0.0041	0.0041	0.0041	0.0041	0.0041	0.0041
FL	12	0.0438	0.0543	0.0561	0.0574	0.0585	0.0601	0.0616	0.0616	0.0616	0.0616	0.0616
GA	13	0.0214	0.0229	0.0235	0.0237	0.0241	0.0247	0.0251	0.0251	0.0251	0.0251	0.0251
HI	15	0.0026	0.0026	0.0026	0.0026	0.0026	0.0026	0.0026	0.0026	0.0026	0.0026	0.0026
ID	16	0.0071	0.0067	0.0064	0.0064	0.0063	0.0061	0.0060	0.0060	0.0060	0.0060	0.0060
IL	17	0.0565	0.0528	0.0515	0.0497	0.0484	0.0474	0.0465	0.0465	0.0465	0.0465	0.0465
IN	18	0.0186	0.0172	0.0167	0.0162	0.0158	0.0154	0.0150	0.0150	0.0150	0.0150	0.0150
IA	19	0.0098	0.0091	0.0088	0.0087	0.0086	0.0086	0.0085	0.0085	0.0085	0.0085	0.0085
KS	20	0.0121	0.0118	0.0118	0.0118	0.0118	0.0119	0.0119	0.0119	0.0119	0.0119	0.0119
KY	21	0.0149	0.0141	0.0137	0.0135	0.0135	0.0135	0.0135	0.0135	0.0135	0.0135	0.0135
LA	22	0.0226	0.0222	0.0219	0.0225	0.0226	0.0225	0.0226	0.0226	0.0226	0.0226	0.0226
ME	23	0.0031	0.0031	0.0031	0.0031	0.0030	0.0030	0.0030	0.0030	0.0030	0.0030	0.0030
MD	24	0.0168	0.0164	0.0165	0.0166	0.0169	0.0174	0.0178	0.0178	0.0178	0.0178	0.0178
MA	25	0.0236	0.0233	0.0232	0.0231	0.0229	0.0227	0.0226	0.0226	0.0226	0.0226	0.0226
MI	26	0.0299	0.0274	0.0260	0.0249	0.0242	0.0236	0.0231	0.0231	0.0231	0.0231	0.0231
MN	27	0.0102	0.0101	0.0100	0.0100	0.0101	0.0101	0.0101	0.0101	0.0101	0.0101	0.0101
MS	28	0.0091	0.0085	0.0082	0.0079	0.0078	0.0077	0.0077	0.0077	0.0077	0.0077	0.0077
MO	29	0.0232	0.0216	0.0211	0.0207	0.0205	0.0202	0.0200	0.0200	0.0200	0.0200	0.0200
MT	30	0.0037	0.0036	0.0036	0.0036	0.0036	0.0035	0.0035	0.0035	0.0035	0.0035	0.0035
NE	31	0.0072	0.0072	0.0069	0.0066	0.0064	0.0062	0.0060	0.0060	0.0060	0.0060	0.0060
NV	32	0.0032	0.0033	0.0035	0.0038	0.0041	0.0044	0.0046	0.0046	0.0046	0.0046	0.0046
NH	33	0.0020	0.0021	0.0022	0.0022	0.0022	0.0022	0.0022	0.0022	0.0022	0.0022	0.0022
NJ	34	0.0302	0.0318	0.0316	0.0306	0.0297	0.0287	0.0281	0.0281	0.0281	0.0281	0.0281
NM	35	0.0060	0.0062	0.0064	0.0067	0.0068	0.0070	0.0071	0.0071	0.0071	0.0071	0.0071
NY	36	0.0755	0.0752	0.0736	0.0703	0.0688	0.0675	0.0665	0.0665	0.0665	0.0665	0.0665
NC	37	0.0254	0.0260	0.0262	0.0263	0.0267	0.0272	0.0276	0.0276	0.0276	0.0276	0.0276
ND	38	0.0020	0.0020	0.0019	0.0018	0.0017	0.0016	0.0015	0.0015	0.0015	0.0015	0.0015
OH	39	0.0415	0.0388	0.0369	0.0354	0.0344	0.0336	0.0330	0.0330	0.0330	0.0330	0.0330
OK	40	0.0160	0.0166	0.0164	0.0167	0.0169	0.0169	0.0170	0.0170	0.0170	0.0170	0.0170
OR	41	0.0187	0.0172	0.0168	0.0170	0.0171	0.0169	0.0167	0.0167	0.0167	0.0167	0.0167
PA	42	0.0391	0.0374	0.0367	0.0359	0.0352	0.0347	0.0342	0.0342	0.0342	0.0342	0.0342
RI	44	0.0034	0.0033	0.0033	0.0032	0.0032	0.0031	0.0030	0.0030	0.0030	0.0030	0.0030
SC	45	0.0155	0.0158	0.0160	0.0162	0.0164	0.0168	0.0170	0.0170	0.0170	0.0170	0.0170
SD	46	0.0020	0.0019	0.0019	0.0019	0.0018	0.0018	0.0017	0.0017	0.0017	0.0017	0.0017
TN	47	0.0254	0.0256	0.0249	0.0244	0.0243	0.0242	0.0240	0.0240	0.0240	0.0240	0.0240
TX	48	0.0785	0.0842	0.0859	0.0892	0.0908	0.0915	0.0920	0.0920	0.0920	0.0920	0.0920
UT	49	0.0056	0.0058	0.0062	0.0064	0.0065	0.0067	0.0067	0.0067	0.0067	0.0067	0.0067
VT	50	0.0016	0.0017	0.0017	0.0017	0.0017	0.0016	0.0016	0.0016	0.0016	0.0016	0.0016
VA	51	0.0300	0.0307	0.0318	0.0323	0.0330	0.0340	0.0349	0.0349	0.0349	0.0349	0.0349
WA	53	0.0245	0.0242	0.0232	0.0236	0.0238	0.0233	0.0236	0.0236	0.0236	0.0236	0.0236
WV	54	0.0065	0.0061	0.0061	0.0061	0.0061	0.0061	0.0061	0.0061	0.0061	0.0061	0.0061
WI	55	0.0179	0.0173	0.0166	0.0160	0.0157	0.0154	0.0151	0.0151	0.0151	0.0151	0.0151
WY	56	0.0020	0.0021	0.0024	0.0025	0.0025	0.0025	0.0025	0.0025	0.0025	0.0025	0.0025
US		1.0000	1.0000	1.0000	1.0000	1.0000	1.0000	1.0000	1.0000	1.0000	1.0000	1.0000

COMMERCIAL ELECTRICITY PROJECTIONS - AVERAGE ANNUAL GROWTH RATES (%) LOW CASE ANL/ARAM/AUSM 3/19/86

		1980-1985	1985-1990	1990-1995	1995-2000	2000-2005	2005-2010	2010-2015	2015-2020	2020-2025	2025-2030
AL	1	3.15	-0.53	1.55	1.53	1.06	0.92	0.46	0.45	0.60	0.58
AK	2	7.68	-1.14	2.94	2.22	1.95	0.71	0.46	0.45	0.60	0.58
AZ	4	6.41	1.51	2.90	2.32	1.88	1.47	0.46	0.45	0.60	0.58
AR	5	4.43	-0.10	2.16	1.35	0.89	0.87	0.46	0.45	0.60	0.58
CA	6	4.71	0.91	2.43	1.89	1.43	1.19	0.46	0.45	0.60	0.58
CO	8	5.40	0.91	2.45	1.89	1.52	1.26	0.46	0.45	0.60	0.58
CT	9	4.74	0.14	1.90	1.29	1.07	0.97	0.46	0.45	0.60	0.58
DE	10	4.86	-0.04	1.79	1.50	1.35	1.21	0.46	0.45	0.60	0.58
DC	11	2.45	0.25	1.66	1.32	1.24	1.28	0.46	0.45	0.60	0.58
FL	12	6.58	0.74	2.40	1.92	1.77	1.56	0.46	0.45	0.60	0.58
GA	13	5.79	0.58	2.16	1.87	1.66	1.46	0.46	0.45	0.60	0.58
HI	15	3.98	0.25	1.95	1.52	1.22	1.08	0.46	0.45	0.60	0.58
ID	16	3.15	-0.75	1.83	1.23	0.64	0.67	0.46	0.45	0.60	0.58
IL	17	2.91	-0.41	1.22	1.01	0.78	0.71	0.46	0.45	0.60	0.58
IN	18	2.77	-0.57	1.31	1.02	0.70	0.62	0.46	0.45	0.60	0.58
IA	19	2.92	-0.68	1.60	1.45	1.05	0.85	0.46	0.45	0.60	0.58
KS	20	3.80	0.07	1.85	1.59	1.31	1.20	0.46	0.45	0.60	0.58
KY	21	3.16	-0.51	1.63	1.61	1.17	1.00	0.46	0.45	0.60	0.58
LA	22	3.94	-0.20	2.48	1.63	1.15	1.13	0.46	0.45	0.60	0.58
ME	23	4.45	-0.02	1.95	1.33	0.99	0.90	0.46	0.45	0.60	0.58
MD	24	3.85	0.21	2.05	1.94	1.74	1.52	0.46	0.45	0.60	0.58
MA	25	4.10	0.01	1.85	1.41	1.00	0.94	0.46	0.45	0.60	0.58
MI	26	2.54	-0.94	1.05	0.97	0.69	0.66	0.46	0.45	0.60	0.58
MN	27	4.24	-0.12	1.96	1.63	1.30	1.08	0.46	0.45	0.60	0.58
MS	28	3.01	-0.80	1.29	1.40	0.95	0.87	0.46	0.45	0.60	0.58
MO	29	2.93	-0.43	1.59	1.30	0.95	0.83	0.46	0.45	0.60	0.58
MT	30	3.47	-0.08	2.10	1.65	0.85	0.77	0.46	0.45	0.60	0.58
NE	31	4.12	-0.67	1.13	0.79	0.47	0.46	0.46	0.45	0.60	0.58
NV	32	5.24	1.49	3.47	3.00	2.53	2.11	0.46	0.45	0.60	0.58
NH	33	5.93	0.51	2.17	1.40	1.27	1.15	0.46	0.45	0.60	0.58
NJ	34	5.43	-0.05	1.24	0.97	0.49	0.69	0.46	0.45	0.60	0.58
NM	35	5.12	0.75	2.66	2.05	1.62	1.30	0.46	0.45	0.60	0.58
NY	36	4.26	-0.36	1.15	0.97	0.83	0.77	0.46	0.45	0.60	0.58
NC	37	4.79	0.27	1.99	1.87	1.59	1.37	0.46	0.45	0.60	0.58
ND	38	3.57	-0.41	0.99	0.39	-0.15	-0.01	0.46	0.45	0.60	0.58
OH	39	2.94	-0.93	1.13	0.94	0.73	0.70	0.46	0.45	0.60	0.58
OK	40	5.11	-0.17	2.42	1.69	1.30	1.12	0.46	0.45	0.60	0.58
OR	41	2.63	-0.39	2.19	1.62	1.00	0.88	0.46	0.45	0.60	0.58
PA	42	3.41	-0.27	1.48	1.13	0.92	0.81	0.46	0.45	0.60	0.58
RI	44	4.08	-0.10	1.53	1.09	0.63	0.62	0.46	0.45	0.60	0.58
SC	45	4.73	0.37	2.16	1.84	1.61	1.40	0.46	0.45	0.60	0.58
SD	46	3.40	-0.25	1.68	0.90	0.46	0.36	0.46	0.45	0.60	0.58
TN	47	4.54	-0.44	1.49	1.47	1.08	0.97	0.46	0.45	0.60	0.58
TX	48	5.82	0.47	2.72	1.91	1.35	1.20	0.46	0.45	0.60	0.58
UT	49	5.33	1.31	2.62	1.94	1.54	1.29	0.46	0.45	0.60	0.58
VT	50	4.55	0.12	2.09	1.34	1.08	1.00	0.46	0.45	0.60	0.58
VA	51	4.85	0.74	2.30	1.98	1.80	1.62	0.46	0.45	0.60	0.58
WA	53	4.08	-0.76	2.27	1.73	1.15	0.93	0.46	0.45	0.60	0.58
WV	54	3.07	0.04	1.95	1.30	1.22	1.12	0.46	0.45	0.60	0.58
WI	55	3.68	-0.77	1.28	1.06	0.82	0.78	0.46	0.45	0.60	0.58
WY	56	5.54	2.03	3.08	1.74	0.84	0.90	0.46	0.45	0.60	0.58
US		4.35	0.07	1.94	1.55	1.21	1.07	0.46	0.45	0.60	0.58

COMMERCIAL ELECTRICITY PROJECTIONS - SUMMARY TABLE

LOW CASE ANL/ARAM/AUSM 3/19/86

		BASE YEAR VALUE (10**9 KWH)	AVERAGE ANNUAL GROWTH RATES (%)				RELATIVE GROWTH FROM 1980 MEASURED BY CHANGE IN SHARE (%)			
		1980	1980-2000	2000-2010	2010-2030	1980-2030	1990	2000	2010	2030
AL	1	7.17	1.42	0.99	0.52	0.97	-8.45	-10.24	-11.54	-11.54
AK	2	0.73	2.83	1.33	0.52	1.62	10.12	19.48	21.72	21.72
AZ	4	9.06	3.27	1.67	0.52	1.84	18.42	28.84	35.81	35.81
AR	5	5.30	1.95	0.83	0.52	1.16	-0.50	-0.36	-2.90	-2.90
CA	6	63.36	2.48	1.31	0.52	1.46	6.06	10.50	12.33	12.33
CO	8	7.25	2.65	1.39	0.52	1.54	9.60	14.26	17.15	17.15
CT	9	7.03	2.01	1.02	0.52	1.21	2.24	0.76	-0.39	-0.39
DE	10	1.51	2.01	1.28	0.52	1.27	1.88	0.92	2.33	2.33
DC	11	2.55	1.42	1.26	0.52	1.03	-7.98	-10.26	-9.20	-9.20
FL	12	27.30	2.89	1.67	0.52	1.69	14.93	19.72	26.10	26.10
GA	13	11.95	2.58	1.56	0.52	1.55	9.81	12.76	17.57	17.57
HI	15	1.46	1.91	1.15	0.52	1.20	-0.94	-1.05	-0.93	-0.93
ID	16	3.97	1.36	0.65	0.52	0.88	-9.43	-11.31	-15.48	-15.48
IL	17	31.60	1.17	0.74	0.52	0.83	-8.94	-14.44	-17.73	-17.73
IN	18	10.40	1.13	0.66	0.52	0.79	-10.28	-15.27	-19.19	-19.19
IA	19	5.48	1.31	0.95	0.52	0.93	-10.13	-12.04	-13.67	-13.67
KS	20	6.78	1.82	1.25	0.52	1.19	-2.64	-2.82	-1.74	-1.74
KY	21	8.35	1.46	1.09	0.52	1.01	-8.31	-9.41	-9.89	-9.89
LA	22	12.65	1.95	1.14	0.52	1.21	-3.32	-0.37	-0.33	-0.38
ME	23	1.71	1.92	0.95	0.52	1.16	0.01	-1.00	-2.87	-2.87
MD	24	9.39	2.01	1.63	0.52	1.34	-1.72	0.75	5.73	5.73
MA	25	13.17	1.83	0.97	0.52	1.13	-1.51	-2.61	-4.22	-4.22
MI	26	16.70	0.90	0.68	0.52	0.70	-12.95	-19.01	-22.65	-22.65
MN	27	5.69	1.92	1.19	0.52	1.21	-1.48	-1.00	-0.51	-0.51
MS	28	5.08	1.22	0.91	0.52	0.88	-10.29	-13.75	-15.70	-15.70
MO	29	12.94	1.34	0.89	0.52	0.92	-8.96	-11.59	-13.76	-13.76
MT	30	2.09	1.78	0.81	0.52	1.08	-4.90	-3.64	-6.73	-6.73
NE	31	4.05	1.33	0.47	0.52	0.83	-4.70	-11.82	-17.50	-17.50
NV	32	1.76	3.29	2.32	0.52	1.98	11.92	29.43	45.35	45.35
NH	33	1.11	2.48	1.21	0.52	1.44	10.15	10.61	11.39	11.39
NJ	34	16.89	1.87	0.59	0.52	1.08	4.63	-1.80	-6.99	-6.99
NM	35	3.35	2.64	1.46	0.52	1.55	7.32	13.95	17.61	17.61
NY	36	42.21	1.49	0.80	0.52	0.97	-2.56	-8.91	-11.95	-11.95
NC	37	14.21	2.22	1.48	0.52	1.39	3.11	4.98	8.57	8.57
ND	38	1.13	1.12	-0.08	0.52	0.64	-6.00	-15.31	-24.96	-24.96
OH	39	23.21	1.01	0.72	0.52	0.76	-11.18	-17.22	-20.62	-20.62
OK	40	8.92	2.24	1.21	0.52	1.35	2.42	5.56	6.28	6.23
OR	41	10.43	1.51	0.94	0.52	1.00	-10.09	-8.64	-10.43	-10.43
PA	42	21.86	1.43	0.87	0.52	0.95	-6.09	-10.08	-12.47	-12.47
RI	44	1.88	1.64	0.62	0.52	0.99	-2.12	-6.23	-10.90	-10.90
SC	45	8.67	2.26	1.50	0.52	1.41	3.35	6.01	9.89	9.89
SD	46	1.13	1.42	0.41	0.52	0.86	-6.00	-10.12	-16.41	-16.41
TN	47	14.18	1.75	1.03	0.52	1.11	-1.67	-4.20	-5.25	-5.25
TX	48	43.87	2.71	1.27	0.52	1.54	9.43	15.70	17.22	17.22
UT	49	3.11	2.80	1.41	0.52	1.61	11.64	17.61	20.84	20.84
VT	50	0.92	2.01	1.04	0.52	1.22	1.17	0.86	-0.11	-0.11
VA	51	16.78	2.46	1.71	0.52	1.53	5.84	10.04	16.38	16.38
WA	53	13.71	1.82	1.04	0.52	1.14	-5.31	-2.93	-3.88	-3.88
WV	54	3.65	1.59	1.17	0.52	1.08	-6.11	-7.23	-6.98	-6.98
WI	55	9.98	1.30	0.80	0.52	0.89	-7.20	-12.30	-15.20	-15.20
WY	56	1.13	3.10	0.87	0.52	1.62	16.89	24.75	21.42	21.42
US		558.79	1.97	1.14	0.52	1.22				

MANUFACTURING ELECTRICITY PROJECTIONS (10**9 KWH) LOW CASE ANL/ARAM/AUSM 3/19/86

		1980	1985	1990	1995	2000	2005	2010	2015	2020	2025	2030
AL	1	25.9	28.7	35.1	39.7	43.5	48.6	54.5	58.0	61.2	65.3	69.4
AK	2	0.8	0.8	1.0	1.2	1.3	1.4	1.5	1.6	1.7	1.8	1.9
AZ	4	3.7	4.7	5.8	6.7	7.6	8.8	9.9	10.6	11.2	11.9	12.7
AR	5	10.0	11.1	13.8	16.1	17.7	19.7	22.1	23.6	24.9	26.5	28.2
CA	6	38.8	44.2	53.6	61.9	69.7	79.5	90.0	95.8	101.1	107.8	114.6
CO	8	3.8	4.5	5.6	6.6	7.6	9.0	10.4	11.1	11.7	12.5	13.2
CT	9	6.0	6.3	7.2	8.2	9.4	10.8	12.2	13.0	13.8	14.7	15.6
DE	10	2.5	2.7	3.2	3.7	4.1	4.6	5.1	5.4	5.7	6.1	6.5
DC	11	0.1	0.1	0.2	0.2	0.2	0.2	0.3	0.3	0.3	0.3	0.3
FL	12	12.9	15.9	19.8	23.1	26.1	29.6	33.7	35.8	37.8	40.3	42.9
GA	13	18.0	20.3	24.0	26.6	28.8	31.6	35.0	37.3	39.3	42.0	44.6
HI	15	0.8	0.9	1.1	1.2	1.3	1.4	1.6	1.7	1.7	1.9	2.0
ID	16	5.0	5.6	7.1	8.1	8.8	9.8	10.9	11.6	12.2	13.1	13.9
IL	17	31.3	28.8	33.0	36.5	39.9	44.6	49.9	53.1	56.0	59.8	63.5
IN	18	28.7	30.1	35.2	40.0	43.7	48.6	54.4	57.9	61.1	65.2	69.3
IA	19	7.7	7.2	8.4	9.3	10.0	11.1	12.3	13.1	13.8	14.7	15.7
KS	20	5.5	5.7	6.8	7.9	8.9	10.2	11.7	12.4	13.1	14.0	14.9
KY	21	26.8	27.7	33.2	37.7	41.9	47.5	53.7	57.1	60.3	64.3	68.3
LA	22	33.7	31.7	38.4	44.0	48.5	54.0	60.9	64.8	68.3	72.9	77.5
ME	23	7.1	7.7	9.2	10.4	11.6	13.1	14.8	15.8	16.7	17.8	18.9
MD	24	8.8	8.9	10.0	10.9	12.1	13.6	15.3	16.3	17.2	18.3	19.5
MA	25	8.3	9.0	10.7	12.4	13.9	15.7	17.8	18.9	20.0	21.3	22.7
MI	26	27.2	28.7	31.7	35.4	39.4	44.7	51.0	54.2	57.2	61.0	64.9
MN	27	7.2	8.1	9.8	11.3	12.6	14.5	16.5	17.6	18.5	19.8	21.0
MS	28	6.1	6.6	8.0	9.0	9.8	11.0	12.4	13.2	13.9	14.8	15.7
MO	29	11.1	12.1	14.0	15.5	16.9	18.7	20.8	22.1	23.3	24.9	26.4
MT	30	4.4	4.3	5.3	6.1	6.7	7.4	8.4	8.9	9.4	10.0	10.6
NE	31	2.7	2.9	3.4	3.9	4.3	4.7	5.3	5.6	5.9	6.3	6.7
NV	32	1.0	1.2	1.5	1.8	2.0	2.3	2.7	2.8	3.0	3.2	3.4
NH	33	1.6	1.8	2.3	2.7	3.2	3.8	4.4	4.7	5.0	5.3	5.6
NJ	34	14.8	15.5	18.0	20.4	22.5	25.3	28.6	30.4	32.1	34.2	36.4
NM	35	0.8	0.9	1.2	1.4	1.5	1.8	2.0	2.1	2.3	2.4	2.6
NY	36	31.4	31.7	36.8	41.0	45.3	51.3	58.0	61.7	65.1	69.5	73.9
NC	37	25.8	28.7	34.2	38.0	41.4	45.7	51.0	54.3	57.3	61.1	65.0
ND	38	0.7	0.8	1.0	1.1	1.2	1.4	1.6	1.7	1.8	1.9	2.0
OH	39	51.5	51.7	59.1	66.6	72.9	81.3	91.4	97.2	102.6	109.5	116.3
OK	40	6.6	6.9	9.0	10.9	12.4	14.3	16.5	17.5	18.5	19.7	21.0
OR	41	12.5	13.0	15.8	18.3	20.3	23.0	26.3	28.0	29.6	31.5	33.5
PA	42	37.1	35.3	41.4	45.2	49.7	55.9	63.0	67.1	70.7	75.5	80.2
RI	44	1.4	1.5	1.7	1.9	2.0	2.1	2.2	2.4	2.5	2.7	2.8
SC	45	17.9	19.2	23.1	25.7	28.0	30.7	34.1	36.3	38.3	40.9	43.4
SD	46	0.5	0.6	0.8	0.9	0.9	1.1	1.2	1.3	1.3	1.4	1.5
TN	47	32.9	36.7	43.0	47.5	51.7	57.3	63.9	68.0	71.7	76.5	81.3
TX	48	69.2	73.7	89.1	101.2	112.3	126.9	144.0	153.3	161.7	172.5	183.3
UT	49	2.6	3.1	3.8	4.5	5.1	5.8	6.6	7.0	7.4	7.9	8.4
VT	50	0.9	1.0	1.3	1.5	1.8	2.1	2.5	2.6	2.8	2.9	3.1
VA	51	12.9	14.4	16.9	18.7	20.3	22.3	24.8	26.4	27.9	29.7	31.6
WA	53	32.5	33.7	41.5	47.7	53.4	60.1	68.3	72.7	76.7	81.8	86.9
WV	54	11.5	10.3	12.5	14.3	15.7	17.5	19.5	20.7	21.9	23.3	24.8
WI	55	14.4	14.7	16.8	18.5	20.4	23.1	26.2	27.8	29.4	31.3	33.3
WY	56	0.5	0.5	0.6	0.7	0.8	0.9	1.0	1.1	1.2	1.2	1.3
US		726.0	762.6	906.1	1023.8	1131.5	1270.1	1432.1	1524.3	1607.9	1715.5	1823.0

MANUFACTURING ELECTRICITY PROJECTIONS - STATE SHARES LOW CASE ANL/ARAM/AUSM 3/19/86

		1980	1985	1990	1995	2000	2005	2010	2015	2020	2025	2030
AL	1	0.0357	0.0376	0.0387	0.0388	0.0385	0.0383	0.0381	0.0381	0.0381	0.0381	0.0381
AK	2	0.0011	0.0010	0.0011	0.0012	0.0011	0.0011	0.0011	0.0011	0.0011	0.0011	0.0011
AZ	4	0.0051	0.0062	0.0064	0.0065	0.0067	0.0069	0.0069	0.0069	0.0069	0.0069	0.0069
AR	5	0.0138	0.0146	0.0152	0.0157	0.0156	0.0155	0.0155	0.0155	0.0155	0.0155	0.0155
CA	6	0.0534	0.0579	0.0592	0.0604	0.0616	0.0626	0.0629	0.0629	0.0629	0.0629	0.0629
CO	8	0.0052	0.0059	0.0062	0.0064	0.0068	0.0071	0.0073	0.0073	0.0073	0.0073	0.0073
CT	9	0.0083	0.0082	0.0080	0.0080	0.0083	0.0085	0.0086	0.0086	0.0086	0.0086	0.0086
DE	10	0.0035	0.0036	0.0036	0.0036	0.0036	0.0036	0.0036	0.0036	0.0036	0.0036	0.0036
DC	11	0.0002	0.0002	0.0002	0.0002	0.0002	0.0002	0.0002	0.0002	0.0002	0.0002	0.0002
FL	12	0.0177	0.0208	0.0218	0.0226	0.0231	0.0233	0.0235	0.0235	0.0235	0.0235	0.0235
GA	13	0.0247	0.0267	0.0265	0.0260	0.0255	0.0249	0.0245	0.0245	0.0245	0.0245	0.0245
HI	15	0.0012	0.0012	0.0012	0.0012	0.0011	0.0011	0.0011	0.0011	0.0011	0.0011	0.0011
ID	16	0.0069	0.0074	0.0078	0.0079	0.0078	0.0077	0.0076	0.0076	0.0076	0.0076	0.0076
IL	17	0.0432	0.0378	0.0364	0.0356	0.0352	0.0351	0.0349	0.0349	0.0349	0.0349	0.0349
IN	18	0.0395	0.0395	0.0388	0.0390	0.0387	0.0382	0.0380	0.0380	0.0380	0.0380	0.0380
IA	19	0.0106	0.0095	0.0093	0.0091	0.0089	0.0087	0.0086	0.0086	0.0086	0.0086	0.0086
KS	20	0.0076	0.0074	0.0075	0.0078	0.0079	0.0080	0.0082	0.0082	0.0082	0.0082	0.0082
KY	21	0.0369	0.0363	0.0366	0.0368	0.0370	0.0374	0.0375	0.0375	0.0375	0.0375	0.0375
LA	22	0.0465	0.0415	0.0424	0.0430	0.0429	0.0425	0.0425	0.0425	0.0425	0.0425	0.0425
ME	23	0.0098	0.0101	0.0102	0.0101	0.0103	0.0103	0.0104	0.0104	0.0104	0.0104	0.0104
MD	24	0.0121	0.0116	0.0110	0.0107	0.0107	0.0107	0.0107	0.0107	0.0107	0.0107	0.0107
MA	25	0.0115	0.0118	0.0118	0.0121	0.0123	0.0124	0.0124	0.0124	0.0124	0.0124	0.0124
MI	26	0.0374	0.0377	0.0350	0.0346	0.0349	0.0352	0.0356	0.0356	0.0356	0.0356	0.0356
MN	27	0.0099	0.0106	0.0108	0.0111	0.0112	0.0114	0.0115	0.0115	0.0115	0.0115	0.0115
MS	28	0.0084	0.0087	0.0089	0.0088	0.0087	0.0086	0.0086	0.0086	0.0086	0.0086	0.0086
MO	29	0.0152	0.0158	0.0155	0.0152	0.0150	0.0147	0.0145	0.0145	0.0145	0.0145	0.0145
MT	30	0.0060	0.0056	0.0058	0.0059	0.0059	0.0059	0.0058	0.0058	0.0058	0.0058	0.0058
NE	31	0.0038	0.0038	0.0038	0.0038	0.0038	0.0037	0.0037	0.0037	0.0037	0.0037	0.0037
NV	32	0.0014	0.0016	0.0017	0.0017	0.0018	0.0018	0.0019	0.0019	0.0019	0.0019	0.0019
NH	33	0.0022	0.0024	0.0025	0.0026	0.0028	0.0030	0.0031	0.0031	0.0031	0.0031	0.0031
NJ	34	0.0204	0.0203	0.0199	0.0199	0.0199	0.0199	0.0200	0.0200	0.0200	0.0200	0.0200
NM	35	0.0011	0.0012	0.0013	0.0013	0.0014	0.0014	0.0014	0.0014	0.0014	0.0014	0.0014
NY	36	0.0432	0.0416	0.0406	0.0400	0.0400	0.0404	0.0405	0.0405	0.0405	0.0405	0.0405
NC	37	0.0356	0.0376	0.0377	0.0372	0.0366	0.0360	0.0356	0.0356	0.0356	0.0356	0.0356
ND	38	0.0010	0.0011	0.0011	0.0011	0.0011	0.0011	0.0011	0.0011	0.0011	0.0011	0.0011
OH	39	0.0710	0.0678	0.0652	0.0651	0.0645	0.0640	0.0638	0.0638	0.0638	0.0638	0.0638
OK	40	0.0091	0.0091	0.0100	0.0107	0.0110	0.0112	0.0115	0.0115	0.0115	0.0115	0.0115
OR	41	0.0172	0.0171	0.0175	0.0179	0.0179	0.0181	0.0184	0.0184	0.0184	0.0184	0.0184
PA	42	0.0512	0.0463	0.0457	0.0441	0.0440	0.0440	0.0440	0.0440	0.0440	0.0440	0.0440
RI	44	0.0020	0.0020	0.0019	0.0018	0.0018	0.0016	0.0016	0.0016	0.0016	0.0016	0.0016
SC	45	0.0247	0.0252	0.0255	0.0251	0.0247	0.0242	0.0238	0.0238	0.0238	0.0238	0.0238
SD	46	0.0007	0.0008	0.0008	0.0008	0.0008	0.0008	0.0008	0.0008	0.0008	0.0008	0.0008
TN	47	0.0454	0.0481	0.0475	0.0464	0.0457	0.0451	0.0446	0.0446	0.0446	0.0446	0.0446
TX	48	0.0954	0.0967	0.0983	0.0989	0.0992	0.0999	0.1006	0.1006	0.1006	0.1006	0.1006
UT	49	0.0036	0.0041	0.0042	0.0044	0.0045	0.0046	0.0046	0.0046	0.0046	0.0046	0.0046
VT	50	0.0013	0.0013	0.0014	0.0015	0.0016	0.0017	0.0017	0.0017	0.0017	0.0017	0.0017
VA	51	0.0177	0.0189	0.0187	0.0182	0.0179	0.0176	0.0173	0.0173	0.0173	0.0173	0.0173
WA	53	0.0447	0.0442	0.0458	0.0466	0.0472	0.0473	0.0477	0.0477	0.0477	0.0477	0.0477
WV	54	0.0158	0.0135	0.0138	0.0139	0.0139	0.0137	0.0136	0.0136	0.0136	0.0136	0.0136
WI	55	0.0193	0.0193	0.0185	0.0180	0.0180	0.0182	0.0183	0.0183	0.0183	0.0183	0.0183
WY	56	0.0007	0.0007	0.0007	0.0007	0.0007	0.0007	0.0007	0.0007	0.0007	0.0007	0.0007
US		1.0000	1.0000	1.0000	1.0000	1.0000	1.0000	1.0000	1.0000	1.0000	1.0000	1.0000

MANUFACTURING ELECTRICITY PROJECTIONS - AVERAGE ANNUAL GROWTH RATES (%) LOW CASE ANL/ARAM/AUSM 3/19/86

		1980-1985	1985-1990	1990-1995	1995-2000	2000-2005	2005-2010	2010-2015	2015-2020	2020-2025	2025-2030
AL	1	2.05	4.14	2.49	1.88	2.23	2.31	1.26	1.07	1.30	1.22
AK	2	-1.10	5.41	3.65	1.38	1.42	1.94	1.26	1.07	1.30	1.22
AZ	4	4.92	4.28	2.84	2.69	2.93	2.44	1.26	1.07	1.30	1.22
AR	5	2.10	4.39	3.09	1.96	2.19	2.34	1.26	1.07	1.30	1.22
CA	6	2.62	3.97	2.90	2.41	2.67	2.52	1.26	1.07	1.30	1.22
CO	8	3.46	4.56	3.35	3.00	3.23	3.03	1.26	1.07	1.30	1.22
CT	9	0.96	2.77	2.67	2.78	2.68	2.63	1.26	1.07	1.30	1.22
DE	10	1.69	3.27	2.92	2.05	2.15	2.26	1.26	1.07	1.30	1.22
DC	11	0.52	4.00	2.73	2.21	2.46	2.60	1.26	1.07	1.30	1.22
FL	12	4.27	4.53	3.15	2.45	2.55	2.62	1.26	1.07	1.30	1.22
GA	13	2.53	3.39	2.06	1.61	1.86	2.07	1.26	1.07	1.30	1.22
HI	15	0.93	3.66	2.56	1.49	1.79	1.94	1.26	1.07	1.30	1.22
ID	16	2.51	4.61	2.73	1.77	2.10	2.19	1.26	1.07	1.30	1.22
IL	17	-1.65	2.71	2.05	1.80	2.25	2.29	1.26	1.07	1.30	1.22
IN	18	1.00	3.18	2.57	1.82	2.12	2.30	1.26	1.07	1.30	1.22
IA	19	-1.20	3.02	2.05	1.55	2.00	2.10	1.26	1.07	1.30	1.22
KS	20	0.57	3.63	3.26	2.26	2.71	2.87	1.26	1.07	1.30	1.22
KY	21	0.66	3.70	2.58	2.14	2.53	2.49	1.26	1.07	1.30	1.22
LA	22	-1.25	3.94	2.74	1.96	2.17	2.43	1.26	1.07	1.30	1.22
ME	23	1.60	3.64	2.37	2.37	2.40	2.52	1.26	1.07	1.30	1.22
MD	24	0.23	2.41	1.81	2.00	2.41	2.37	1.26	1.07	1.30	1.22
MA	25	1.47	3.63	2.93	2.28	2.58	2.48	1.26	1.07	1.30	1.22
MI	26	1.12	1.98	2.24	2.18	2.52	2.66	1.26	1.07	1.30	1.22
MN	27	2.50	3.86	2.91	2.24	2.70	2.70	1.26	1.07	1.30	1.22
MS	28	1.72	3.89	2.27	1.82	2.17	2.44	1.26	1.07	1.30	1.22
MO	29	1.73	3.08	2.06	1.73	2.04	2.08	1.26	1.07	1.30	1.22
MT	30	-0.33	4.24	2.77	1.93	2.18	2.37	1.26	1.07	1.30	1.22
NE	31	1.02	3.52	2.50	1.85	2.14	2.26	1.26	1.07	1.30	1.22
NV	32	3.72	4.53	3.14	2.60	2.88	2.74	1.26	1.07	1.30	1.22
NH	33	3.06	4.41	3.31	3.72	3.37	3.11	1.26	1.07	1.30	1.22
NJ	34	0.90	3.05	2.45	2.03	2.33	2.46	1.26	1.07	1.30	1.22
NM	35	3.50	4.47	3.12	2.49	2.85	2.66	1.26	1.07	1.30	1.22
NY	36	0.24	2.99	2.18	2.01	2.52	2.50	1.26	1.07	1.30	1.22
NC	37	2.11	3.57	2.16	1.72	2.00	2.21	1.26	1.07	1.30	1.22
ND	38	2.42	3.49	2.38	2.09	2.35	2.33	1.26	1.07	1.30	1.22
OH	39	0.07	2.70	2.42	1.82	2.21	2.35	1.26	1.07	1.30	1.22
OK	40	0.97	5.50	3.83	2.64	2.78	2.91	1.26	1.07	1.30	1.22
OR	41	0.83	3.97	2.95	2.04	2.57	2.72	1.26	1.07	1.30	1.22
PA	42	-1.00	3.23	1.76	1.94	2.37	2.42	1.26	1.07	1.30	1.22
RI	44	0.75	2.54	2.01	1.32	0.95	1.27	1.26	1.07	1.30	1.22
SC	45	1.39	3.71	2.19	1.69	1.91	2.11	1.26	1.07	1.30	1.22
SD	46	4.08	3.41	2.22	1.91	2.35	2.23	1.26	1.07	1.30	1.22
TN	47	2.19	3.21	1.99	1.71	2.09	2.20	1.26	1.07	1.30	1.22
TX	48	1.26	3.86	2.59	2.10	2.47	2.57	1.26	1.07	1.30	1.22
UT	49	3.83	4.18	3.15	2.52	2.74	2.61	1.26	1.07	1.30	1.22
VT	50	1.67	4.86	3.77	3.38	3.45	3.05	1.26	1.07	1.30	1.22
VA	51	2.28	3.27	1.94	1.67	1.92	2.17	1.26	1.07	1.30	1.22
WA	53	0.78	4.25	2.82	2.28	2.37	2.60	1.26	1.07	1.30	1.22
WV	54	-2.07	3.91	2.67	1.93	2.14	2.23	1.26	1.07	1.30	1.22
WI	55	0.47	2.68	1.93	2.01	2.50	2.54	1.26	1.07	1.30	1.22
WY	56	-0.86	4.56	3.24	2.06	2.18	2.44	1.26	1.07	1.30	1.22
US		0.99	3.51	2.47	2.02	2.34	2.43	1.26	1.07	1.30	1.22

MANUFACTURING ELECTRICITY PROJECTIONS - SUMMARY TABLE

LOW CASE ANL/ARAM/AUSM 3/19/86

		BASE YEAR VALUE (10**9 KWH)	AVERAGE ANNUAL GROWTH RATES (%)				RELATIVE GROWTH FROM 1980 MEASURED BY CHANGE IN SHARE (%)			
		1980	1980-2000	2000-2010	2010-2030	1980-2030	1990	2000	2010	2030
AL	1	25.88	2.64	2.27	1.21	1.99	8.62	7.96	6.75	6.75
AK	2	0.82	2.31	1.68	1.21	1.74	-1.32	1.27	-5.49	-5.49
AZ	4	3.71	3.68	2.68	1.21	2.49	25.63	32.13	36.02	36.02
AR	5	10.03	2.83	2.27	1.21	2.09	10.19	13.21	11.93	11.93
CA	6	38.79	2.97	2.60	1.21	2.19	10.80	15.26	17.66	17.66
CO	8	3.78	3.59	3.13	1.21	2.54	18.71	29.95	39.73	39.73
CT	9	5.99	2.29	2.65	1.21	1.93	-3.67	0.93	3.62	3.62
DE	10	2.52	2.48	2.20	1.21	1.92	2.35	4.74	2.90	2.90
DC	11	0.13	2.36	2.53	1.21	1.93	0.03	2.25	3.74	3.74
FL	12	12.87	3.60	2.59	1.21	2.44	23.29	30.09	32.67	32.67
GA	13	17.96	2.40	1.96	1.21	1.84	7.28	3.04	-1.11	-1.11
HI	15	0.84	2.16	1.87	1.21	1.72	0.46	-1.70	-6.55	-6.55
ID	16	4.98	2.90	2.15	1.21	2.07	13.66	13.66	11.04	11.04
IL	17	31.33	1.21	2.27	1.21	1.42	-15.72	-18.32	-19.24	-19.24
IN	18	28.65	2.14	2.21	1.21	1.78	-1.55	-2.06	-3.69	-3.69
IA	19	7.68	1.34	2.05	1.21	1.43	-12.45	-16.20	-18.89	-18.89
KS	20	5.50	2.43	2.79	1.21	2.01	-1.46	3.62	7.78	7.78
KY	21	26.76	2.27	2.51	1.21	1.89	-0.67	0.45	1.67	1.67
LA	22	33.74	1.83	2.30	1.21	1.68	-8.73	-7.79	-8.55	-8.55
ME	23	7.12	2.49	2.46	1.21	1.97	3.76	5.04	5.78	5.78
MD	24	8.78	1.61	2.39	1.21	1.61	-8.70	-11.69	-11.67	-11.67
MA	25	8.34	2.57	2.53	1.21	2.02	2.99	6.66	8.19	8.19
MI	26	27.17	1.83	2.59	1.21	1.76	-6.54	-6.85	-4.94	-4.94
MN	27	7.18	2.87	2.70	1.21	2.17	9.57	13.09	16.61	16.61
MS	28	6.10	2.42	2.30	1.21	1.91	5.62	3.56	2.73	2.73
MO	29	11.07	2.15	2.06	1.21	1.76	1.59	-1.85	-4.91	-4.91
MT	30	4.37	2.14	2.28	1.21	1.80	-2.97	-1.99	-3.00	-3.00
NE	31	2.74	2.22	2.20	1.21	1.81	0.21	-0.50	-2.28	-2.28
NV	32	1.01	3.50	2.81	1.21	2.44	20.04	27.58	33.03	33.03
NH	33	1.58	3.63	3.24	1.21	2.58	15.61	30.81	42.17	42.17
NJ	34	14.83	2.11	2.42	1.21	1.81	-2.58	-2.61	-2.28	-2.28
NM	35	0.79	3.39	2.76	1.21	2.39	18.39	25.03	29.66	29.66
NY	36	31.35	1.85	2.51	1.21	1.73	-6.00	-7.37	-6.19	-6.19
NC	37	25.83	2.39	2.11	1.21	1.86	6.03	2.93	0.19	0.19
ND	38	0.74	2.59	2.34	1.21	1.99	7.20	7.08	6.62	6.62
OH	39	51.55	1.75	2.28	1.21	1.64	-8.11	-9.22	-10.14	-10.14
OK	40	6.59	3.22	2.85	1.21	2.34	9.92	20.99	26.59	26.59
OR	41	12.52	2.44	2.64	1.21	1.99	1.43	3.94	6.59	6.59
PA	42	37.14	1.47	2.39	1.21	1.55	-10.67	-14.07	-13.99	-13.99
RI	44	1.44	1.65	1.11	1.21	1.37	-5.70	-10.94	-21.41	-21.41
SC	45	17.95	2.24	2.01	1.21	1.78	3.03	-0.02	-3.64	-3.64
SD	46	0.53	2.90	2.29	1.21	2.10	15.70	13.65	12.60	12.60
TN	47	32.93	2.28	2.15	1.21	1.82	4.61	0.64	-1.67	-1.67
TX	48	69.23	2.45	2.52	1.21	1.97	3.10	4.08	5.48	5.48
UT	49	2.59	3.42	2.68	1.21	2.38	18.69	25.67	29.30	29.30
VT	50	0.91	3.41	3.25	1.21	2.50	10.36	25.55	36.59	36.59
VA	51	12.88	2.29	2.05	1.21	1.81	5.38	0.95	-2.34	-2.34
WA	53	32.46	2.52	2.48	1.21	1.99	2.54	5.65	6.66	6.66
WV	54	11.47	1.59	2.18	1.21	1.56	-12.56	-12.11	-13.83	-13.83
WI	55	14.36	1.77	2.52	1.21	1.70	-6.38	-8.90	-7.67	-7.67
WY	56	0.52	2.23	2.31	1.21	1.84	-4.13	-0.27	-1.03	-1.03
US		726.05	2.24	2.38	1.21	1.86				

INDUSTRIAL ELECTRICITY PROJECTIONS (10**9 KWH) LOW CASE ANL/ARAM/AUSM 3/19/86

		1980	1985	1990	1995	2000	2005	2010	2015	2020	2025	2030
AL	1	29.7	32.4	39.8	44.6	49.4	55.3	62.1	66.1	69.7	74.4	79.0
AK	2	1.4	1.6	1.7	2.2	2.3	2.7	3.1	3.3	3.4	3.7	3.9
AZ	4	8.6	11.1	12.3	14.7	16.8	19.2	22.0	23.4	24.6	26.3	27.9
AR	5	12.5	13.6	16.6	19.1	20.9	23.1	25.8	27.4	28.9	30.9	32.8
CA	6	53.6	60.7	73.8	86.0	96.3	109.1	123.5	131.5	138.7	148.0	157.2
CO	8	7.1	8.6	10.3	11.9	13.5	15.5	17.8	18.9	19.9	21.3	22.6
CT	9	6.1	6.4	7.4	8.4	9.7	11.0	12.5	13.3	14.1	15.0	16.0
DE	10	2.5	2.7	3.2	3.7	4.1	4.6	5.1	5.4	5.7	6.1	6.5
DC	11	3.4	2.9	2.9	3.2	3.9	4.6	5.4	5.7	6.0	6.4	6.8
FL	12	21.7	26.7	32.8	38.4	44.3	51.7	60.3	64.2	67.7	72.3	76.8
GA	13	22.2	25.6	29.9	33.0	35.7	39.0	43.2	46.0	48.5	51.8	55.0
HI	15	3.3	3.0	3.7	4.3	4.7	5.2	5.8	6.1	6.5	6.9	7.3
ID	16	5.0	5.6	7.1	8.1	8.8	9.8	10.9	11.6	12.2	13.1	13.9
IL	17	37.0	34.0	39.3	43.3	47.3	53.2	59.6	63.4	66.9	71.3	75.8
IN	18	34.2	35.4	41.6	46.6	50.7	56.3	62.9	67.0	70.6	75.4	80.1
IA	19	9.8	9.1	10.5	11.6	12.5	13.7	15.1	16.1	17.0	18.1	19.3
KS	20	7.9	8.1	9.6	11.1	12.2	13.8	15.8	16.8	17.7	18.9	20.1
KY	21	28.3	29.1	34.9	39.5	44.0	49.7	56.2	59.8	63.1	67.3	71.5
LA	22	33.7	31.7	38.4	44.0	48.5	54.0	60.9	64.8	68.3	72.9	77.5
ME	23	7.4	8.0	9.5	10.7	12.0	13.5	15.3	16.3	17.2	18.3	19.4
MD	24	13.3	13.7	15.9	17.8	19.7	22.0	24.7	26.2	27.7	29.5	31.4
MA	25	9.0	9.7	11.6	13.5	15.1	17.1	19.4	20.6	21.8	23.2	24.7
MI	26	33.6	35.8	40.3	44.4	49.5	56.3	63.7	67.8	71.5	76.3	81.0
MN	27	16.0	17.9	20.3	23.0	25.3	28.5	31.9	34.0	35.8	38.2	40.6
MS	28	8.4	8.6	10.1	11.2	12.3	13.6	15.3	16.2	17.1	18.3	19.4
MO	29	11.2	12.2	14.2	15.7	17.1	18.9	21.0	22.3	23.6	25.1	26.7
MT	30	5.9	5.8	7.1	8.1	8.8	9.7	10.8	11.5	12.1	12.9	13.7
NE	31	4.2	4.4	5.1	5.6	6.0	6.6	7.3	7.8	8.2	8.7	9.3
NV	32	5.0	5.3	7.3	9.4	10.9	12.9	15.8	16.8	17.8	18.9	20.1
NH	33	2.5	3.0	3.6	4.2	4.8	5.6	6.3	6.7	7.1	7.6	8.1
NJ	34	16.9	18.1	21.1	23.7	26.2	29.0	32.6	34.7	36.6	39.0	41.4
NM	35	3.0	3.5	4.1	4.9	5.5	6.2	7.1	7.5	7.9	8.4	9.0
NY	36	34.3	35.3	41.7	46.0	50.7	57.5	64.7	68.8	72.6	77.5	82.3
NC	37	27.7	30.7	36.5	40.5	44.2	48.8	54.4	57.9	61.1	65.2	69.2
ND	38	1.6	1.7	1.9	2.1	2.2	2.4	2.7	2.8	3.0	3.2	3.4
OH	39	58.3	58.1	67.3	75.2	82.9	92.4	103.3	110.0	116.0	123.8	131.5
OK	40	10.4	10.6	13.0	15.4	17.2	19.5	22.3	23.7	25.0	26.7	28.3
OR	41	14.0	14.2	17.2	20.0	22.1	25.0	28.5	30.3	31.9	34.1	36.2
PA	42	48.3	45.8	55.1	59.3	65.0	72.3	80.3	85.5	90.2	96.2	102.2
RI	44	1.4	1.5	1.7	1.9	2.0	2.1	2.2	2.4	2.5	2.7	2.8
SC	45	17.9	19.2	23.1	25.7	28.0	30.7	34.1	36.3	38.3	40.9	43.4
SD	46	1.3	1.4	1.6	1.7	1.8	2.0	2.1	2.2	2.4	2.5	2.7
TN	47	35.4	39.4	45.8	50.3	55.1	61.3	68.5	72.9	76.9	82.0	87.2
TX	48	90.5	96.0	115.6	133.1	148.2	165.2	188.5	200.6	211.7	225.8	240.0
UT	49	4.5	5.3	6.3	7.4	8.3	9.5	10.8	11.5	12.1	12.9	13.8
VT	50	1.3	1.4	1.7	2.1	2.4	2.8	3.2	3.4	3.6	3.8	4.1
VA	51	14.1	15.7	18.5	20.4	22.2	24.5	27.4	29.2	30.8	32.8	34.9
WA	53	32.5	33.7	41.5	47.7	53.4	60.1	68.3	72.7	76.7	81.8	86.9
WV	54	11.8	10.6	13.0	14.8	16.2	13.0	20.1	21.4	22.6	24.1	25.6
WI	55	15.4	15.7	17.8	19.6	21.6	24.5	27.7	29.5	31.1	33.2	35.3
WY	56	4.7	4.3	5.5	6.2	6.6	7.2	8.0	8.5	8.9	9.5	10.1
US		839.9	935.0	1110.9	1255.2	1387.2	1557.2	1755.8	1868.8	1971.4	2103.3	2235.1

INDUSTRIAL ELECTRICITY PROJECTIONS - STATE SHARE LOW CASE ANL/ARAM/AUSM 3/19/86

		1980	1985	1990	1995	2000	2005	2010	2015	2020	2025	2030
AL	1	0.0334	0.0347	0.0358	0.0356	0.0356	0.0355	0.0354	0.0354	0.0354	0.0354	0.0354
AK	2	0.0015	0.0017	0.0016	0.0018	0.0017	0.0018	0.0017	0.0017	0.0017	0.0017	0.0017
AZ	4	0.0093	0.0118	0.0111	0.0117	0.0121	0.0124	0.0125	0.0125	0.0125	0.0125	0.0125
AR	5	0.0141	0.0145	0.0149	0.0152	0.0150	0.0148	0.0147	0.0147	0.0147	0.0147	0.0147
CA	6	0.0602	0.0649	0.0665	0.0685	0.0694	0.0701	0.0703	0.0703	0.0704	0.0704	0.0704
CO	8	0.0080	0.0092	0.0093	0.0095	0.0098	0.0099	0.0101	0.0101	0.0101	0.0101	0.0101
CT	9	0.0069	0.0069	0.0066	0.0067	0.0070	0.0071	0.0071	0.0071	0.0071	0.0071	0.0071
DE	10	0.0028	0.0029	0.0029	0.0030	0.0030	0.0029	0.0029	0.0029	0.0029	0.0029	0.0029
DC	11	0.0038	0.0031	0.0026	0.0025	0.0028	0.0030	0.0030	0.0030	0.0030	0.0030	0.0030
FL	12	0.0244	0.0286	0.0295	0.0306	0.0320	0.0332	0.0344	0.0344	0.0344	0.0344	0.0344
GA	13	0.0250	0.0274	0.0269	0.0263	0.0257	0.0251	0.0246	0.0246	0.0246	0.0246	0.0246
HI	15	0.0037	0.0032	0.0033	0.0034	0.0034	0.0033	0.0033	0.0033	0.0033	0.0033	0.0033
ID	16	0.0056	0.0060	0.0064	0.0064	0.0064	0.0063	0.0062	0.0062	0.0062	0.0062	0.0062
IL	17	0.0415	0.0364	0.0353	0.0345	0.0341	0.0342	0.0339	0.0339	0.0339	0.0339	0.0339
IN	18	0.0385	0.0378	0.0375	0.0371	0.0366	0.0362	0.0358	0.0358	0.0358	0.0358	0.0358
IA	19	0.0110	0.0098	0.0095	0.0093	0.0090	0.0088	0.0086	0.0086	0.0086	0.0086	0.0086
KS	20	0.0089	0.0087	0.0086	0.0088	0.0088	0.0089	0.0090	0.0090	0.0090	0.0090	0.0090
KY	21	0.0318	0.0312	0.0314	0.0315	0.0317	0.0319	0.0320	0.0320	0.0320	0.0320	0.0320
LA	22	0.0379	0.0339	0.0346	0.0351	0.0350	0.0347	0.0347	0.0347	0.0347	0.0347	0.0347
ME	23	0.0083	0.0085	0.0086	0.0085	0.0087	0.0087	0.0087	0.0087	0.0087	0.0087	0.0087
MD	24	0.0150	0.0147	0.0143	0.0142	0.0142	0.0141	0.0140	0.0140	0.0140	0.0140	0.0140
MA	25	0.0101	0.0103	0.0105	0.0108	0.0109	0.0110	0.0110	0.0110	0.0110	0.0110	0.0110
MI	26	0.0377	0.0383	0.0363	0.0354	0.0357	0.0361	0.0363	0.0363	0.0363	0.0363	0.0363
MN	27	0.0180	0.0191	0.0183	0.0183	0.0183	0.0183	0.0182	0.0182	0.0182	0.0182	0.0182
MS	28	0.0094	0.0092	0.0091	0.0089	0.0088	0.0087	0.0087	0.0087	0.0087	0.0087	0.0087
MO	29	0.0126	0.0131	0.0128	0.0125	0.0123	0.0122	0.0120	0.0120	0.0120	0.0120	0.0120
MT	30	0.0067	0.0062	0.0064	0.0064	0.0064	0.0062	0.0061	0.0061	0.0061	0.0061	0.0061
NE	31	0.0048	0.0048	0.0045	0.0044	0.0044	0.0043	0.0042	0.0042	0.0042	0.0042	0.0042
NV	32	0.0056	0.0056	0.0066	0.0075	0.0078	0.0083	0.0090	0.0090	0.0090	0.0090	0.0090
NH	33	0.0028	0.0032	0.0032	0.0033	0.0035	0.0036	0.0036	0.0036	0.0036	0.0036	0.0036
NJ	34	0.0190	0.0194	0.0190	0.0188	0.0189	0.0186	0.0185	0.0185	0.0185	0.0185	0.0185
NM	35	0.0033	0.0037	0.0037	0.0039	0.0039	0.0040	0.0040	0.0040	0.0040	0.0040	0.0040
NY	36	0.0385	0.0377	0.0375	0.0367	0.0366	0.0369	0.0368	0.0368	0.0368	0.0368	0.0368
NC	37	0.0311	0.0329	0.0328	0.0323	0.0319	0.0313	0.0310	0.0310	0.0310	0.0310	0.0310
ND	38	0.0018	0.0018	0.0017	0.0016	0.0016	0.0016	0.0015	0.0015	0.0015	0.0015	0.0015
OH	39	0.0655	0.0622	0.0606	0.0599	0.0597	0.0593	0.0588	0.0588	0.0588	0.0588	0.0588
OK	40	0.0116	0.0113	0.0117	0.0123	0.0124	0.0125	0.0127	0.0127	0.0127	0.0127	0.0127
OR	41	0.0157	0.0152	0.0155	0.0159	0.0159	0.0161	0.0162	0.0162	0.0162	0.0162	0.0162
PA	42	0.0542	0.0490	0.0496	0.0472	0.0468	0.0464	0.0457	0.0457	0.0457	0.0457	0.0457
RI	44	0.0016	0.0016	0.0015	0.0015	0.0014	0.0013	0.0013	0.0013	0.0013	0.0013	0.0013
SC	45	0.0202	0.0206	0.0208	0.0205	0.0202	0.0197	0.0194	0.0194	0.0194	0.0194	0.0194
SD	46	0.0015	0.0015	0.0014	0.0014	0.0013	0.0013	0.0012	0.0012	0.0012	0.0012	0.0012
TN	47	0.0398	0.0421	0.0412	0.0401	0.0397	0.0394	0.0390	0.0390	0.0390	0.0390	0.0390
TX	48	0.1017	0.1027	0.1041	0.1060	0.1054	0.1061	0.1074	0.1074	0.1074	0.1074	0.1074
UT	49	0.0051	0.0056	0.0057	0.0059	0.0060	0.0061	0.0062	0.0062	0.0062	0.0062	0.0062
VT	50	0.0015	0.0015	0.0016	0.0017	0.0017	0.0018	0.0018	0.0018	0.0018	0.0018	0.0018
VA	51	0.0159	0.0168	0.0166	0.0162	0.0160	0.0157	0.0156	0.0156	0.0156	0.0156	0.0156
WA	53	0.0365	0.0361	0.0374	0.0380	0.0385	0.0386	0.0389	0.0389	0.0389	0.0389	0.0389
WV	54	0.0133	0.0114	0.0117	0.0118	0.0117	0.0116	0.0115	0.0115	0.0115	0.0115	0.0115
WI	55	0.0173	0.0168	0.0161	0.0156	0.0156	0.0157	0.0158	0.0158	0.0158	0.0158	0.0158
WY	56	0.0053	0.0046	0.0049	0.0049	0.0048	0.0046	0.0045	0.0045	0.0045	0.0045	0.0045
US		1.0000	1.0000	1.0000	1.0000	1.0000	1.0000	1.0000	1.0000	1.0000	1.0000	1.0000

INDUSTRIAL ELECTRICITY PROJECTIONS - AVERAGE ANNUAL GROWTH RATES (%) LOW CASE ANL/ARAM/AUSM 3/19/86

		1980-1985	1985-1990	1990-1995	1995-2000	2000-2005	2005-2010	2010-2015	2015-2020	2020-2025	2025-2030
AL	1	1.79	4.16	2.33	2.04	2.29	2.33	1.26	1.07	1.30	1.22
AK	2	2.97	1.74	5.37	0.88	3.18	2.18	1.26	1.07	1.30	1.22
AZ	4	5.18	2.21	3.55	2.71	2.77	2.68	1.26	1.07	1.30	1.22
AR	5	1.62	4.08	2.92	1.74	2.05	2.23	1.26	1.07	1.30	1.22
CA	6	2.53	4.00	3.09	2.29	2.54	2.51	1.26	1.07	1.30	1.22
CO	8	3.79	3.74	2.98	2.52	2.73	2.78	1.26	1.07	1.30	1.22
CT	9	1.03	2.79	2.68	2.75	2.68	2.62	1.26	1.07	1.30	1.22
DE	10	1.69	3.27	2.92	2.05	2.15	2.26	1.26	1.07	1.30	1.22
DC	11	-2.83	-0.21	1.93	4.28	3.50	2.88	1.26	1.07	1.30	1.22
FL	12	4.21	4.18	3.18	2.94	3.12	3.14	1.26	1.07	1.30	1.22
GA	13	2.88	3.16	1.98	1.59	1.81	2.07	1.26	1.07	1.30	1.22
HI	15	-1.94	4.19	3.06	1.82	2.03	2.20	1.26	1.07	1.30	1.22
ID	16	2.51	4.61	2.73	1.77	2.10	2.19	1.26	1.07	1.30	1.22
IL	17	-1.65	2.92	1.96	1.81	2.36	2.28	1.26	1.07	1.30	1.22
IN	18	0.64	3.32	2.29	1.72	2.12	2.23	1.26	1.07	1.30	1.22
IA	19	-1.36	2.87	1.99	1.50	1.89	1.93	1.26	1.07	1.30	1.22
KS	20	0.51	3.38	2.92	1.97	2.50	2.69	1.26	1.07	1.30	1.22
KY	21	0.57	3.68	2.50	2.16	2.51	2.47	1.26	1.07	1.30	1.22
LA	22	-1.25	3.94	2.74	1.96	2.17	2.43	1.26	1.07	1.30	1.22
ME	23	1.53	3.59	2.36	2.34	2.37	2.49	1.26	1.07	1.30	1.22
MD	24	0.60	2.96	2.24	2.07	2.21	2.34	1.26	1.07	1.30	1.22
MA	25	1.56	3.78	3.00	2.22	2.62	2.49	1.26	1.07	1.30	1.22
MI	26	1.29	2.42	1.94	2.21	2.58	2.50	1.26	1.07	1.30	1.22
MN	27	2.13	2.57	2.51	1.98	2.34	2.32	1.26	1.07	1.30	1.22
MS	28	0.57	3.24	2.06	1.85	2.11	2.32	1.26	1.07	1.30	1.22
MO	29	1.71	3.08	2.04	1.73	2.03	2.08	1.26	1.07	1.30	1.22
MT	30	-0.42	3.97	2.76	1.75	1.86	2.16	1.26	1.07	1.30	1.22
NE	31	0.93	2.58	1.94	1.64	1.91	1.94	1.26	1.07	1.30	1.22
NV	32	1.20	6.78	5.28	2.83	3.49	4.18	1.26	1.07	1.30	1.22
NH	33	3.81	4.05	2.99	3.02	2.76	2.67	1.26	1.07	1.30	1.22
NJ	34	1.41	3.11	2.29	2.07	2.01	2.37	1.26	1.07	1.30	1.22
NM	35	3.18	3.70	3.41	2.20	2.48	2.70	1.26	1.07	1.30	1.22
NY	36	0.55	3.40	2.01	1.97	2.53	2.38	1.26	1.07	1.30	1.22
NC	37	2.09	3.49	2.14	1.74	1.99	2.21	1.26	1.07	1.30	1.22
ND	38	0.91	2.79	1.41	1.43	1.80	1.83	1.26	1.07	1.30	1.22
OH	39	-0.06	2.97	2.25	1.95	2.20	2.26	1.26	1.07	1.30	1.22
OK	40	0.38	4.29	3.40	2.28	2.53	2.65	1.26	1.07	1.30	1.22
OR	41	0.32	3.89	3.04	1.99	2.50	2.62	1.26	1.07	1.30	1.22
PA	42	-1.04	3.76	1.48	1.85	2.16	2.12	1.26	1.07	1.30	1.22
RI	44	0.75	2.54	2.01	1.32	0.95	1.27	1.26	1.07	1.30	1.22
SC	45	1.39	3.71	2.19	1.69	1.91	2.11	1.26	1.07	1.30	1.22
SD	46	1.16	2.27	1.50	1.21	1.59	1.50	1.26	1.07	1.30	1.22
TN	47	2.15	3.05	1.92	1.82	2.15	2.24	1.26	1.07	1.30	1.22
TX	48	1.18	3.79	2.85	1.89	2.47	2.68	1.26	1.07	1.30	1.22
UT	49	2.98	3.75	3.25	2.39	2.57	2.68	1.26	1.07	1.30	1.22
VT	50	1.99	4.10	3.53	2.85	3.04	2.77	1.26	1.07	1.30	1.22
VA	51	2.20	3.24	1.98	1.74	1.99	2.27	1.26	1.07	1.30	1.22
WA	53	0.73	4.25	2.82	2.28	2.37	2.60	1.26	1.07	1.30	1.22
WV	54	-2.11	4.00	2.66	1.92	2.12	2.21	1.26	1.07	1.30	1.22
WI	55	0.39	2.63	1.88	2.02	2.50	2.52	1.26	1.07	1.30	1.22
WY	56	-1.92	5.03	2.48	1.50	1.62	2.05	1.26	1.07	1.30	1.22
US		0.99	3.51	2.47	2.02	2.34	2.43	1.26	1.07	1.30	1.22

INDUSTRIAL ELECTRICITY PROJECTIONS - SUMMARY TABLE

LOW CASE ANL/ARAM/AUSM 3/19/86

		BASE YEAR VALUE (10**9 KWH)	AVERAGE ANNUAL GROWTH RATES (%)				RELATIVE GROWTH FROM 1980 MEASURED BY CHANGE IN SHARE (%)			
		1980	1980-2000	2000-2010	2010-2030	1980-2030	1990	2000	2010	2030
AL	1	29.69	2.58	2.31	1.21	1.98	7.36	6.76	6.00	6.00
AK	2	1.37	2.72	2.68	1.21	2.11	1.07	9.81	13.02	13.02
AZ	4	8.59	3.41	2.72	1.21	2.39	15.01	25.35	29.56	29.56
AR	5	12.51	2.59	2.14	1.21	1.95	6.04	6.95	4.38	4.38
CA	6	53.55	2.98	2.52	1.21	2.18	10.45	15.34	16.91	16.91
CO	8	7.12	3.26	2.76	1.21	2.34	15.96	21.80	26.31	26.31
CT	9	6.11	2.31	2.65	1.21	1.94	-3.24	1.30	3.96	3.96
DE	10	2.52	2.48	2.20	1.21	1.92	2.32	4.72	2.88	2.88
DC	11	3.37	0.74	3.19	1.21	1.42	-31.53	-25.60	-19.53	-19.53
FL	12	21.74	3.63	3.13	1.21	2.56	20.83	30.80	40.62	40.62
GA	13	22.21	2.40	1.94	1.21	1.83	7.84	3.07	-1.36	-1.36
HI	15	3.31	1.76	2.11	1.21	1.61	-10.81	-9.14	-11.52	-11.52
ID	16	4.98	2.90	2.15	1.21	2.07	13.63	13.63	11.02	11.02
IL	17	36.96	1.25	2.32	1.21	1.45	-14.88	-17.82	-18.32	-18.32
IN	18	34.24	1.99	2.17	1.21	1.71	-2.64	-4.94	-6.88	-6.88
IA	19	9.79	1.24	1.91	1.21	1.36	-13.82	-17.96	-21.68	-21.68
KS	20	7.92	2.19	2.60	1.21	1.88	-2.97	-1.04	1.04	1.04
KY	21	28.33	2.22	2.49	1.21	1.87	-1.26	-0.47	0.54	0.54
LA	22	33.74	1.83	2.30	1.21	1.68	-8.75	-7.81	-8.57	-8.57
ME	23	7.40	2.45	2.43	1.21	1.95	3.08	4.16	4.61	4.61
MD	24	13.34	1.96	2.28	1.21	1.73	-4.49	-5.35	-6.35	-6.35
MA	25	8.95	2.64	2.55	1.21	2.05	4.19	7.97	9.76	9.76
MI	26	33.56	1.97	2.54	1.21	1.78	-3.74	-5.30	-3.84	-3.84
MN	27	16.05	2.31	2.33	1.21	1.87	1.33	1.33	0.79	0.79
MS	28	8.37	1.93	2.21	1.21	1.70	-3.32	-6.01	-7.57	-7.57
MO	29	11.21	2.14	2.06	1.21	1.75	1.47	-2.04	-5.15	-5.15
MT	30	5.94	2.00	2.01	1.21	1.69	-4.71	-4.63	-8.04	-8.04
NE	31	4.25	1.77	1.93	1.21	1.58	-4.70	-8.83	-12.83	-12.83
NV	32	4.95	4.00	3.84	1.21	2.84	18.04	40.55	61.79	61.79
NH	33	2.45	3.47	2.71	1.21	2.41	17.79	26.84	30.99	30.99
NJ	34	16.90	2.22	2.19	1.21	1.81	0.12	-0.50	-2.33	-2.33
NM	35	2.95	3.12	2.59	1.21	2.25	12.33	18.57	20.98	20.98
NY	36	34.31	1.98	2.46	1.21	1.77	-2.66	-5.10	-4.43	-4.43
NC	37	27.71	2.36	2.10	1.21	1.85	5.44	2.31	-0.52	-0.52
ND	38	1.61	1.63	1.81	1.21	1.50	-3.80	-11.31	-16.14	-16.14
OH	39	58.31	1.77	2.23	1.21	1.64	-7.55	-8.84	-10.18	-10.18
OK	40	10.36	2.58	2.59	1.21	2.03	0.71	6.71	8.90	8.90
OR	41	14.01	2.30	2.56	1.21	1.92	-1.47	1.15	2.93	2.93
PA	42	48.26	1.50	2.14	1.21	1.51	-8.57	-13.61	-15.65	-15.65
RI	44	1.44	1.65	1.11	1.21	1.37	-5.72	-10.96	-21.43	-21.43
SC	45	17.95	2.24	2.01	1.21	1.78	3.01	-0.05	-3.67	-3.67
SD	46	1.34	1.53	1.54	1.21	1.41	-5.06	-13.01	-19.89	-19.89
TN	47	35.41	2.23	2.20	1.21	1.82	3.54	-0.19	-1.99	-1.99
TX	48	90.54	2.42	2.57	1.21	1.97	2.32	3.59	5.53	5.53
UT	49	4.53	3.09	2.63	1.21	2.24	11.55	17.95	20.76	20.76
VT	50	1.30	3.11	2.90	1.21	2.31	8.05	18.41	24.56	24.56
VA	51	14.12	2.29	2.13	1.21	1.83	4.76	0.90	-1.58	-1.58
WA	53	32.46	2.52	2.48	1.21	1.99	2.52	5.63	6.64	6.64
WV	54	11.84	1.59	2.16	1.21	1.55	-12.39	-12.01	-13.89	-13.89
WI	55	15.37	1.73	2.51	1.21	1.68	-6.98	-9.65	-8.55	-8.55
WY	56	4.70	1.74	1.84	1.21	1.55	-7.09	-9.38	-14.12	-14.12
US		889.95	2.24	2.38	1.21	1.86				

TOTAL END-USE ELECTRICITY DEMAND PROJECTIONS (10**9 KWH) LOW CASE ANL/ARAM/AUSM 3/19/86

		1980	1985	1990	1995	2000	2005	2010	2015	2020	2025	2030
AL	1	53.3	58.2	66.5	73.1	79.8	87.7	96.7	101.8	106.5	109.1	111.7
AK	2	3.2	4.0	4.2	5.0	5.4	6.1	6.6	6.9	7.2	7.3	7.4
AZ	4	27.3	34.8	39.2	45.6	51.8	58.6	65.5	68.2	70.8	70.7	70.7
AR	5	28.0	31.2	35.2	39.7	43.0	46.8	51.2	53.7	56.0	56.5	57.0
CA	6	168.9	199.4	224.2	254.0	281.3	310.1	340.2	354.4	367.9	371.0	374.2
CO	8	21.1	25.8	29.0	33.0	36.9	41.2	45.8	47.7	49.6	50.0	50.4
CT	9	21.4	24.0	25.7	28.3	31.0	33.8	36.9	38.4	39.8	39.9	39.9
DE	10	5.9	6.6	7.3	8.1	8.9	9.7	10.6	11.1	11.6	11.8	11.9
DC	11	7.0	6.9	6.9	7.5	8.6	9.6	10.7	11.2	11.6	12.0	12.4
FL	12	93.8	117.4	134.4	154.0	174.6	198.4	224.2	233.2	241.9	237.6	233.2
GA	13	54.2	63.9	71.2	78.4	85.4	93.4	102.6	107.2	111.5	111.9	112.3
HI	15	6.6	6.8	7.8	8.8	9.7	10.6	11.6	12.2	12.7	12.9	13.0
ID	16	13.9	15.6	17.3	19.2	20.7	22.3	24.1	25.2	26.3	26.5	26.7
IL	17	98.5	101.4	107.5	115.2	122.9	132.5	142.9	149.2	155.1	156.9	158.7
IN	18	63.9	67.1	74.0	80.5	86.3	93.5	101.8	107.0	111.9	114.6	117.3
IA	19	25.3	25.7	27.2	29.2	31.0	33.1	35.5	37.1	38.6	38.7	38.9
KS	20	21.9	23.9	26.0	28.7	31.1	34.0	37.3	38.9	40.5	41.0	41.5
KY	21	49.8	52.6	59.1	65.3	71.7	79.4	87.9	92.5	96.8	99.5	102.1
LA	22	63.2	65.8	74.0	84.0	92.3	101.4	112.4	117.9	123.0	125.2	127.4
ME	23	12.1	13.3	15.1	16.8	18.6	20.5	22.8	24.0	25.2	25.9	26.7
MD	24	34.8	38.0	41.5	45.5	49.9	54.8	60.2	62.9	65.4	65.8	66.3
MA	25	33.7	37.9	40.9	45.3	49.3	53.5	58.0	60.4	62.6	63.0	63.3
MI	26	72.5	77.2	82.0	87.8	95.1	103.8	113.6	119.2	124.5	127.1	129.7
MN	27	33.5	37.3	40.6	44.7	48.7	53.5	58.8	61.7	64.4	65.3	66.3
MS	28	23.4	25.1	27.1	29.2	31.6	34.3	37.5	39.2	40.7	40.6	40.5
MO	29	42.8	46.7	49.4	52.8	56.1	59.8	64.0	66.6	69.2	68.9	68.6
MT	30	10.9	11.4	12.9	14.5	15.7	16.9	18.4	19.3	20.2	20.6	21.1
NE	31	13.8	15.2	15.9	16.8	17.7	18.6	19.7	20.6	21.4	21.4	21.5
NV	32	10.4	11.9	15.1	18.7	21.7	25.5	30.3	31.7	33.1	33.4	33.7
NH	33	6.0	7.2	8.2	9.2	10.3	11.5	12.8	13.4	14.0	14.1	14.2
NJ	34	50.1	57.4	61.8	66.8	71.4	75.9	81.8	85.3	88.6	89.6	90.5
NM	35	8.8	10.6	11.8	13.6	15.2	16.9	18.7	19.5	20.2	20.4	20.7
NY	36	107.1	119.4	127.1	136.0	145.3	156.8	169.1	176.2	182.9	185.5	188.0
NC	37	66.3	75.3	83.7	91.8	99.8	109.0	119.5	125.0	130.2	131.2	132.1
ND	38	5.2	5.7	6.0	6.3	6.6	6.9	7.3	7.6	7.9	7.9	7.8
OH	39	115.0	119.3	128.8	139.5	150.0	162.7	177.2	186.1	194.3	198.7	203.2
OK	40	31.6	36.1	39.6	44.9	49.4	54.3	59.7	62.3	64.7	64.7	64.7
OR	41	38.0	40.3	44.5	50.2	54.9	60.1	66.0	68.9	71.7	72.2	72.6
PA	42	101.9	104.3	115.2	123.1	132.2	143.0	154.9	162.4	169.3	172.1	174.8
RI	44	5.2	5.7	6.0	6.5	6.8	7.1	7.5	7.8	8.1	8.1	8.1
SC	45	39.2	44.0	49.6	54.9	59.8	65.5	71.9	75.2	78.4	79.2	80.1
SD	46	5.1	5.5	5.7	6.1	6.3	6.6	6.9	7.2	7.5	7.4	7.3
TN	47	75.8	84.9	92.9	100.3	108.4	118.0	129.0	135.3	141.2	143.2	145.3
TX	48	191.6	221.0	249.1	283.4	311.5	344.7	383.0	401.0	417.8	423.8	429.7
UT	49	10.8	13.0	14.9	17.1	19.1	21.2	23.6	24.7	25.7	26.1	26.4
VT	50	4.0	4.5	5.0	5.6	6.2	6.9	7.6	8.0	8.3	8.3	8.3
VA	51	50.6	58.6	64.2	70.7	77.2	84.7	93.0	96.7	100.3	100.0	99.8
WA	53	70.6	77.0	86.6	97.6	107.8	118.5	131.0	137.3	143.3	145.0	146.8
WV	54	22.1	21.8	24.6	27.2	29.5	32.2	35.2	37.0	38.6	39.4	40.1
WI	55	38.9	41.8	44.4	47.5	51.0	55.4	60.3	63.0	65.6	66.3	67.0
WY	56	7.2	7.3	8.9	10.1	11.0	11.8	12.9	13.6	14.2	14.6	15.0
US		2166.2	2405.8	2655.9	2938.2	3206.2	3513.2	3856.8	4033.0	4198.8	4242.8	4286.7

TOTAL END-USE ELECTRICITY PROJECTIONS - STATE SHARES LOW CASE ANL/ARAM/AUSM 3/19/86

		1980	1985	1990	1995	2000	2005	2010	2015	2020	2025	2030
AL	1	0.0246	0.0242	0.0250	0.0249	0.0249	0.0250	0.0251	0.0252	0.0254	0.0257	0.0261
AK	2	0.0015	0.0017	0.0016	0.0017	0.0017	0.0017	0.0017	0.0017	0.0017	0.0017	0.0017
AZ	4	0.0126	0.0145	0.0148	0.0155	0.0161	0.0167	0.0170	0.0169	0.0169	0.0167	0.0165
AR	5	0.0129	0.0130	0.0133	0.0135	0.0134	0.0133	0.0133	0.0133	0.0133	0.0133	0.0133
CA	6	0.0780	0.0829	0.0844	0.0865	0.0877	0.0883	0.0882	0.0879	0.0876	0.0874	0.0873
CO	8	0.0097	0.0107	0.0109	0.0112	0.0115	0.0117	0.0119	0.0118	0.0118	0.0118	0.0118
CT	9	0.0099	0.0100	0.0097	0.0096	0.0097	0.0096	0.0096	0.0095	0.0095	0.0094	0.0093
DE	10	0.0027	0.0028	0.0027	0.0028	0.0028	0.0028	0.0028	0.0028	0.0028	0.0028	0.0028
DC	11	0.0032	0.0029	0.0026	0.0026	0.0027	0.0027	0.0028	0.0028	0.0028	0.0028	0.0029
FL	12	0.0433	0.0488	0.0506	0.0524	0.0544	0.0565	0.0581	0.0578	0.0576	0.0560	0.0544
GA	13	0.0250	0.0265	0.0268	0.0267	0.0266	0.0266	0.0266	0.0266	0.0266	0.0264	0.0262
HI	15	0.0030	0.0028	0.0029	0.0030	0.0030	0.0030	0.0030	0.0030	0.0030	0.0030	0.0030
ID	16	0.0064	0.0065	0.0065	0.0065	0.0065	0.0063	0.0063	0.0063	0.0063	0.0062	0.0062
IL	17	0.0455	0.0421	0.0405	0.0392	0.0383	0.0377	0.0371	0.0370	0.0369	0.0370	0.0370
IN	18	0.0295	0.0279	0.0279	0.0274	0.0269	0.0266	0.0264	0.0265	0.0266	0.0270	0.0274
IA	19	0.0117	0.0107	0.0103	0.0099	0.0097	0.0094	0.0092	0.0092	0.0092	0.0091	0.0091
KS	20	0.0101	0.0100	0.0098	0.0098	0.0097	0.0097	0.0097	0.0097	0.0096	0.0097	0.0097
KY	21	0.0230	0.0219	0.0223	0.0222	0.0224	0.0226	0.0228	0.0229	0.0230	0.0234	0.0238
LA	22	0.0292	0.0273	0.0279	0.0286	0.0288	0.0289	0.0291	0.0292	0.0293	0.0295	0.0297
ME	23	0.0056	0.0055	0.0057	0.0057	0.0058	0.0058	0.0059	0.0060	0.0060	0.0061	0.0062
MD	24	0.0161	0.0158	0.0156	0.0155	0.0156	0.0156	0.0156	0.0156	0.0156	0.0155	0.0155
MA	25	0.0156	0.0153	0.0154	0.0154	0.0154	0.0152	0.0150	0.0150	0.0149	0.0148	0.0148
MI	26	0.0335	0.0321	0.0309	0.0299	0.0297	0.0296	0.0295	0.0296	0.0296	0.0300	0.0303
MN	27	0.0155	0.0155	0.0153	0.0152	0.0152	0.0152	0.0152	0.0153	0.0153	0.0154	0.0155
MS	28	0.0108	0.0104	0.0102	0.0099	0.0099	0.0098	0.0097	0.0097	0.0097	0.0096	0.0094
MO	29	0.0198	0.0194	0.0186	0.0180	0.0175	0.0170	0.0166	0.0165	0.0165	0.0162	0.0160
MT	30	0.0051	0.0048	0.0049	0.0049	0.0049	0.0048	0.0048	0.0048	0.0048	0.0049	0.0049
NE	31	0.0064	0.0063	0.0060	0.0057	0.0055	0.0053	0.0051	0.0051	0.0051	0.0050	0.0050
NV	32	0.0048	0.0050	0.0057	0.0064	0.0068	0.0073	0.0078	0.0079	0.0079	0.0079	0.0079
NH	33	0.0028	0.0030	0.0031	0.0031	0.0032	0.0033	0.0033	0.0033	0.0033	0.0033	0.0033
NJ	34	0.0231	0.0239	0.0233	0.0227	0.0223	0.0216	0.0212	0.0211	0.0211	0.0211	0.0211
NM	35	0.0040	0.0044	0.0045	0.0046	0.0047	0.0048	0.0048	0.0048	0.0048	0.0048	0.0048
NY	36	0.0494	0.0496	0.0479	0.0463	0.0453	0.0446	0.0438	0.0437	0.0436	0.0437	0.0439
NC	37	0.0306	0.0313	0.0315	0.0313	0.0311	0.0310	0.0310	0.0310	0.0310	0.0309	0.0308
ND	38	0.0024	0.0024	0.0023	0.0021	0.0020	0.0020	0.0019	0.0019	0.0019	0.0019	0.0018
OH	39	0.0531	0.0496	0.0485	0.0475	0.0468	0.0463	0.0459	0.0461	0.0463	0.0468	0.0474
OK	40	0.0146	0.0150	0.0149	0.0153	0.0154	0.0155	0.0155	0.0154	0.0154	0.0153	0.0151
OR	41	0.0175	0.0168	0.0168	0.0171	0.0171	0.0171	0.0171	0.0171	0.0171	0.0170	0.0169
PA	42	0.0470	0.0434	0.0434	0.0419	0.0412	0.0407	0.0402	0.0403	0.0403	0.0406	0.0408
RI	44	0.0024	0.0024	0.0023	0.0022	0.0021	0.0020	0.0019	0.0019	0.0019	0.0019	0.0019
SC	45	0.0181	0.0183	0.0187	0.0187	0.0186	0.0186	0.0186	0.0187	0.0187	0.0187	0.0187
SD	46	0.0023	0.0023	0.0022	0.0021	0.0020	0.0019	0.0018	0.0018	0.0018	0.0017	0.0017
TN	47	0.0350	0.0353	0.0350	0.0341	0.0338	0.0336	0.0335	0.0336	0.0336	0.0338	0.0339
TX	48	0.0884	0.0919	0.0933	0.0964	0.0972	0.0981	0.0993	0.0994	0.0995	0.0999	0.1003
UT	49	0.0050	0.0054	0.0056	0.0058	0.0059	0.0060	0.0061	0.0061	0.0061	0.0061	0.0062
VT	50	0.0018	0.0019	0.0019	0.0019	0.0019	0.0020	0.0020	0.0020	0.0020	0.0020	0.0019
VA	51	0.0234	0.0244	0.0242	0.0241	0.0241	0.0241	0.0241	0.0240	0.0239	0.0236	0.0233
WA	53	0.0326	0.0320	0.0326	0.0332	0.0336	0.0337	0.0340	0.0341	0.0341	0.0342	0.0342
WV	54	0.0102	0.0090	0.0093	0.0093	0.0092	0.0092	0.0091	0.0092	0.0092	0.0093	0.0094
WI	55	0.0180	0.0174	0.0167	0.0161	0.0159	0.0158	0.0156	0.0156	0.0156	0.0156	0.0156
WY	56	0.0033	0.0031	0.0034	0.0034	0.0034	0.0034	0.0033	0.0034	0.0034	0.0034	0.0035
US		1.0000	1.0000	1.0000	1.0000	1.0000	1.0000	1.0000	1.0000	1.0000	1.0000	1.0000

TOTAL END-USE ELECTRICITY PROJECTIONS - AVERAGE ANNUAL GROWTH RATES (%) LOW CASE ANL/ARAM/AUSM 3/19/86

		1980-1985	1985-1990	1990-1995	1995-2000	2000-2005	2005-2010	2010-2015	2015-2020	2020-2025	2025-2030
AL	1	1.77	2.70	1.90	1.77	1.91	1.96	1.03	0.91	0.48	0.47
AK	2	4.86	0.77	3.54	1.69	2.48	1.54	0.91	0.82	0.18	0.18
AZ	4	5.01	2.40	3.07	2.57	2.50	2.25	0.81	0.74	0.00	0.00
AR	5	2.13	2.49	2.41	1.63	1.69	1.82	0.94	0.84	0.18	0.18
CA	6	3.38	2.37	2.53	2.06	1.97	1.87	0.82	0.75	0.17	0.17
CO	8	4.12	2.39	2.59	2.27	2.23	2.14	0.84	0.77	0.16	0.15
CT	9	2.33	1.40	1.96	1.81	1.75	1.75	0.82	0.75	0.02	0.02
DE	10	2.43	1.86	2.19	1.76	1.82	1.87	0.91	0.82	0.29	0.29
DC	11	-0.37	0.20	1.67	2.58	2.31	2.12	0.90	0.80	0.64	0.62
FL	12	4.59	2.74	2.77	2.54	2.60	2.47	0.79	0.73	-0.36	-0.37
GA	13	3.34	2.21	1.94	1.72	1.81	1.89	0.88	0.80	0.07	0.07
HI	15	0.71	2.68	2.49	1.80	1.87	1.92	0.93	0.83	0.25	0.25
ID	16	2.42	2.07	2.11	1.48	1.49	1.59	0.90	0.81	0.18	0.17
IL	17	0.58	1.19	1.38	1.32	1.52	1.52	0.86	0.78	0.23	0.23
IN	18	0.97	1.98	1.71	1.38	1.62	1.71	1.01	0.90	0.47	0.46
IA	19	0.30	1.18	1.37	1.24	1.34	1.38	0.89	0.80	0.07	0.07
KS	20	1.80	1.63	2.00	1.62	1.79	1.89	0.87	0.78	0.24	0.24
KY	21	1.13	2.34	2.03	1.88	2.06	2.05	1.02	0.90	0.55	0.54
LA	22	0.80	2.39	2.55	1.91	1.91	2.08	0.96	0.86	0.35	0.34
ME	23	1.87	2.62	2.13	2.03	2.03	2.12	1.04	0.92	0.60	0.58
MD	24	1.77	1.73	1.90	1.84	1.89	1.92	0.86	0.78	0.14	0.14
MA	25	2.38	1.56	2.06	1.68	1.66	1.65	0.80	0.73	0.11	0.11
MI	26	1.25	1.22	1.38	1.62	1.77	1.82	0.97	0.86	0.42	0.41
MN	27	2.16	1.72	1.95	1.74	1.91	1.89	0.97	0.86	0.29	0.29
MS	28	1.40	1.52	1.55	1.59	1.65	1.76	0.88	0.80	-0.07	-0.07
MO	29	1.74	1.13	1.35	1.25	1.28	1.35	0.81	0.75	-0.08	-0.08
MT	30	0.88	2.50	2.30	1.61	1.48	1.69	0.99	0.83	0.47	0.45
NE	31	1.91	0.90	1.10	1.02	1.08	1.18	0.84	0.77	0.03	0.03
NV	32	2.77	4.80	4.38	3.06	3.26	3.46	0.96	0.86	0.18	0.18
NH	33	3.49	2.68	2.41	2.31	2.22	2.17	0.94	0.84	0.14	0.14
NJ	34	2.77	1.46	1.58	1.35	1.22	1.50	0.85	0.77	0.22	0.21
NM	35	3.84	2.26	2.85	2.20	2.13	2.07	0.83	0.75	0.22	0.22
NY	36	2.19	1.27	1.37	1.33	1.53	1.52	0.83	0.75	0.28	0.27
NC	37	2.57	2.15	1.86	1.68	1.78	1.86	0.90	0.81	0.14	0.14
ND	38	1.72	1.14	0.87	0.96	1.04	1.17	0.86	0.78	-0.20	-0.21
OH	39	0.73	1.55	1.62	1.45	1.64	1.72	0.98	0.87	0.45	0.44
OK	40	2.70	1.89	2.55	1.91	1.90	1.93	0.85	0.77	0.00	0.00
OR	41	1.21	1.93	2.44	1.78	1.83	1.89	0.89	0.80	0.12	0.12
PA	42	0.48	2.01	1.32	1.44	1.59	1.61	0.94	0.84	0.32	0.32
RI	44	2.03	1.07	1.47	1.10	0.82	0.97	0.78	0.72	0.02	0.02
SC	45	2.36	2.40	2.04	1.73	1.83	1.89	0.91	0.82	0.22	0.22
SD	46	1.55	0.90	1.11	0.86	0.90	0.94	0.82	0.75	-0.32	-0.32
TN	47	2.30	1.80	1.55	1.56	1.72	1.80	0.96	0.85	0.29	0.28
TX	48	2.89	2.42	2.61	1.91	2.04	2.13	0.92	0.83	0.28	0.28
UT	49	3.82	2.80	2.78	2.21	2.18	2.15	0.89	0.80	0.27	0.27
VT	50	2.35	2.16	2.42	2.01	2.08	2.01	0.89	0.80	-0.01	-0.01
VA	51	2.97	1.83	1.96	1.78	1.85	1.91	0.78	0.72	-0.05	-0.05
WA	53	1.75	2.37	2.42	2.00	1.91	2.03	0.95	0.85	0.24	0.24
WV	54	-0.32	2.46	2.07	1.60	1.76	1.84	0.98	0.87	0.33	0.38
WI	55	1.43	1.19	1.35	1.47	1.64	1.72	0.90	0.81	0.21	0.20
WY	56	0.29	3.94	2.57	1.62	1.50	1.79	1.00	0.89	0.56	0.55
US		2.12	2.00	2.04	1.76	1.85	1.88	0.90	0.81	0.21	0.21

TOTAL END-USE ELECTRICITY PROJECTIONS - SUMMARY TABLE

LOW CASE ANL/ARAM/AUSM 3/19/86

		BASE YEAR VALUE (10**9 KWH)	AVERAGE ANNUAL GROWTH RATES (%)				RELATIVE GROWTH FROM 1980 MEASURED BY CHANGE IN SHARE (%)			
		1980	1980-2000	2000-2010	2010-2030	1980-2030	1990	2000	2010	2030
AL	1	53.33	2.04	1.94	0.72	1.49	1.73	1.11	1.82	5.83
AK	2	3.19	2.70	2.01	0.52	1.69	7.47	15.22	16.85	16.61
AZ	4	27.29	3.25	2.37	0.39	1.92	17.22	28.20	34.76	30.98
AR	5	28.04	2.17	1.76	0.54	1.43	2.52	3.72	2.64	2.78
CA	6	168.92	2.53	1.92	0.43	1.60	8.27	12.50	13.12	11.93
CO	8	21.06	2.84	2.18	0.48	1.76	12.35	18.32	22.06	20.85
CT	9	21.36	1.83	1.75	0.40	1.26	-1.87	-1.99	-3.05	-5.54
DE	10	5.90	2.06	1.84	0.53	1.42	0.86	1.60	1.40	2.34
DC	11	7.01	1.01	2.21	0.74	1.14	-19.14	-17.35	-14.48	-10.86
FL	12	93.79	3.16	2.54	0.20	1.84	16.86	25.77	34.30	25.67
GA	13	54.19	2.30	1.85	0.45	1.47	7.18	6.42	6.29	4.70
HI	15	6.61	1.92	1.89	0.57	1.37	-3.57	-1.24	-0.93	-0.27
ID	16	13.83	2.02	1.54	0.51	1.32	1.84	0.78	-2.42	-2.73
IL	17	98.49	1.11	1.52	0.53	0.96	-10.94	-15.67	-18.48	-18.55
IN	18	63.90	1.51	1.67	0.71	1.22	-5.57	-8.81	-10.56	-7.28
IA	19	25.30	1.02	1.36	0.46	0.86	-12.22	-17.20	-21.21	-22.37
KS	20	21.89	1.77	1.84	0.53	1.29	-3.27	-4.11	-4.33	-4.28
KY	21	49.76	1.84	2.06	0.75	1.45	-3.12	-2.61	-0.77	3.74
LA	22	63.23	1.91	1.99	0.63	1.41	-4.50	-1.41	-0.16	1.80
ME	23	12.11	2.16	2.07	0.78	1.59	1.84	3.65	5.80	11.29
MD	24	34.85	1.81	1.90	0.48	1.29	-2.96	-3.28	-2.94	-3.86
MA	25	33.69	1.92	1.65	0.44	1.27	-0.83	-1.21	-3.25	-5.00
MI	26	72.51	1.36	1.80	0.66	1.17	-7.81	-11.40	-11.99	-9.63
MN	27	33.49	1.89	1.90	0.60	1.37	-1.16	-1.72	-1.40	0.02
MS	28	23.41	1.52	1.71	0.39	1.10	-5.70	-8.71	-10.10	-12.64
MO	29	42.81	1.36	1.32	0.35	0.95	-5.96	-11.39	-16.06	-19.03
MT	30	10.94	1.82	1.59	0.70	1.32	-3.54	-3.03	-5.63	-2.48
NE	31	13.81	1.23	1.13	0.42	0.88	-6.20	-13.65	-19.71	-21.50
NV	32	10.42	3.75	3.36	0.54	2.38	18.22	41.01	63.18	63.66
NH	33	6.04	2.72	2.20	0.51	1.73	10.49	15.55	19.36	18.96
NJ	34	50.12	1.79	1.36	0.51	1.19	0.52	-3.71	-8.38	-8.73
NM	35	8.76	2.78	2.10	0.51	1.73	10.11	17.03	19.77	19.22
NY	36	107.10	1.54	1.53	0.53	1.13	-3.20	-8.33	-11.33	-11.30
NC	37	66.30	2.07	1.82	0.50	1.39	3.01	1.70	1.28	0.70
ND	38	5.19	1.17	1.11	0.31	0.81	-5.99	-14.68	-20.83	-24.28
OH	39	114.97	1.34	1.68	0.69	1.15	-8.64	-11.86	-13.45	-10.71
OK	40	31.59	2.26	1.91	0.40	1.44	2.29	5.66	6.18	3.54
OR	41	37.99	1.85	1.86	0.48	1.30	-4.46	-2.45	-2.50	-3.44
PA	42	101.89	1.31	1.60	0.61	1.09	-7.74	-12.35	-14.59	-13.29
RI	44	5.16	1.42	0.89	0.38	0.90	-4.86	-10.45	-18.64	-20.96
SC	45	39.19	2.13	1.86	0.54	1.44	3.23	3.06	3.00	3.27
SD	46	5.09	1.10	0.92	0.23	0.72	-7.91	-15.88	-23.37	-27.80
TN	47	75.79	1.80	1.76	0.59	1.31	-0.08	-3.39	-4.37	-3.15
TX	48	191.59	2.46	2.09	0.58	1.63	6.03	9.85	12.27	13.35
UT	49	10.76	2.90	2.17	0.56	1.81	12.94	19.71	23.30	24.01
VT	50	3.99	2.24	2.05	0.42	1.47	1.94	5.14	7.01	4.66
VA	51	50.62	2.13	1.88	0.35	1.37	3.38	3.07	3.23	-0.38
WA	53	70.62	2.14	1.97	0.57	1.47	0.02	3.10	4.18	5.03
WV	54	22.10	1.45	1.80	0.65	1.20	-9.33	-9.91	-10.48	-8.27
WI	55	38.95	1.36	1.68	0.53	1.09	-7.08	-11.46	-13.07	-13.06
WY	56	7.24	2.10	1.65	0.75	1.47	0.41	2.36	0.17	4.64
US		2166.24	1.98	1.86	0.53	1.37				

A.3 HIGH SCENARIO

RESIDENTIAL ELECTRICITY PROJECTIONS (10**9 KWH) HIGH CASE ANL/ARAM/AUSM 3/19/86

		1980	1985	1990	1995	2000	2005	2010	2015	2020	2025	2030
AL	1	16.5	17.5	19.3	21.1	23.2	25.3	28.0	29.5	31.0	32.2	33.4
AK	2	1.1	1.4	1.5	1.7	1.9	2.1	2.2	2.4	2.5	2.6	2.7
AZ	4	9.6	11.5	14.0	16.6	19.5	22.8	26.5	27.9	29.3	30.4	31.6
AR	5	10.2	11.1	12.6	14.2	15.9	17.5	19.5	20.6	21.6	22.4	23.3
CA	6	52.0	59.4	69.4	79.1	90.1	101.1	114.1	120.2	126.2	131.1	136.1
CO	8	6.7	7.8	9.1	10.5	12.2	13.9	15.9	16.7	17.6	18.3	19.0
CT	9	8.2	8.7	9.7	10.8	11.9	13.0	14.5	15.2	16.0	16.6	17.2
DE	10	1.9	2.0	2.2	2.5	2.8	3.1	3.4	3.6	3.8	3.9	4.1
DC	11	1.1	1.1	1.2	1.2	1.3	1.4	1.6	1.6	1.7	1.8	1.9
FL	12	44.7	53.4	64.5	76.1	89.4	104.1	121.2	127.6	134.0	139.3	144.5
GA	13	20.0	22.6	25.9	29.0	32.6	36.4	41.1	43.2	45.4	47.2	49.0
HI	15	1.8	2.1	2.4	2.7	3.1	3.5	4.0	4.2	4.4	4.5	4.7
ID	16	4.9	5.4	6.0	6.7	7.4	8.0	8.8	9.3	9.8	10.2	10.5
IL	17	29.9	31.1	33.8	36.5	39.7	42.8	46.8	49.3	51.7	53.8	55.8
IN	18	19.3	19.9	21.7	23.4	25.3	27.0	29.3	30.9	32.4	33.7	34.9
IA	19	10.0	10.3	11.0	11.7	12.6	13.4	14.6	15.3	16.1	16.7	17.4
KS	20	7.2	7.7	8.5	9.2	10.1	11.0	12.2	12.9	13.5	14.0	14.6
KY	21	13.1	13.8	15.2	16.6	18.3	20.1	22.2	23.4	24.6	25.5	26.5
LA	22	16.8	18.9	21.1	24.2	27.5	30.8	34.9	36.7	38.6	40.1	41.6
ME	23	3.0	3.2	3.6	4.0	4.4	4.9	5.4	5.7	6.0	6.2	6.5
MD	24	12.1	13.0	14.5	15.9	17.6	19.4	21.6	22.7	23.8	24.8	25.7
MA	25	11.6	12.2	13.6	15.1	16.7	18.2	20.2	21.2	22.3	23.2	24.0
MI	26	22.3	22.6	24.8	26.4	28.7	30.8	33.5	35.3	37.1	38.5	40.0
MN	27	11.7	12.5	13.8	15.1	16.6	18.2	20.2	21.3	22.4	23.3	24.1
MS	28	10.0	10.7	11.7	12.9	14.3	15.8	17.6	18.5	19.4	20.2	21.0
MO	29	18.6	19.6	21.3	22.8	24.5	26.1	28.4	29.9	31.4	32.6	33.9
MT	30	2.9	3.2	3.5	3.9	4.3	4.6	5.1	5.3	5.6	5.8	6.0
NE	31	5.5	5.8	6.3	6.6	7.0	7.5	8.0	8.5	8.9	9.2	9.6
NV	32	3.7	4.4	5.5	6.7	8.1	9.6	11.4	12.0	12.6	13.1	13.6
NH	33	2.5	2.8	3.2	3.6	4.0	4.5	5.0	5.3	5.5	5.8	6.0
NJ	34	16.3	17.4	19.3	21.2	23.0	24.7	27.0	28.4	29.8	31.0	32.1
NM	35	2.5	2.8	3.3	3.8	4.4	5.1	5.8	6.1	6.4	6.7	6.9
NY	36	30.6	32.3	35.5	38.5	42.0	45.4	49.9	52.5	55.1	57.3	59.5
NC	37	24.4	26.8	30.2	33.5	37.1	41.0	45.7	48.1	50.6	52.5	54.5
ND	38	2.5	2.6	2.8	3.0	3.2	3.5	3.8	4.0	4.2	4.3	4.5
OH	39	33.5	34.5	37.5	40.3	43.4	46.5	50.6	53.3	56.0	58.2	60.3
OK	40	12.3	14.2	15.7	17.8	20.0	22.2	24.9	26.2	27.5	28.6	29.7
OR	41	13.5	14.3	16.2	18.4	20.6	22.8	25.4	26.8	28.1	29.2	30.3
PA	42	31.8	32.9	36.0	39.1	42.4	45.7	50.1	52.7	55.4	57.6	59.7
RI	44	1.8	1.9	2.1	2.3	2.4	2.6	2.8	2.9	3.1	3.2	3.3
SC	45	12.6	14.0	16.0	17.9	20.1	22.4	25.3	26.6	27.9	29.0	30.1
SD	46	2.6	2.8	2.9	3.1	3.3	3.5	3.8	4.0	4.2	4.3	4.5
TN	47	26.2	28.0	31.0	33.7	37.0	40.4	44.7	47.1	49.4	51.4	53.3
TX	48	57.2	67.2	76.1	86.8	98.2	109.6	123.7	130.2	136.7	142.1	147.4
UT	49	3.1	3.7	4.4	5.1	5.9	6.6	7.6	8.0	8.4	8.7	9.0
VT	50	1.8	1.9	2.2	2.4	2.7	3.0	3.3	3.5	3.6	3.8	3.9
VA	51	19.7	21.8	24.4	27.1	30.2	33.5	37.6	39.6	41.6	43.2	44.9
WA	53	24.4	26.7	30.0	34.1	38.2	42.2	47.2	49.7	52.2	54.3	56.3
WV	54	6.6	6.9	7.6	8.3	9.0	9.8	10.8	11.4	12.0	12.4	12.9
WI	55	13.6	14.3	15.7	16.8	18.4	19.8	21.7	22.8	24.0	24.9	25.9
WY	56	1.4	1.6	1.9	2.2	2.4	2.7	3.0	3.2	3.4	3.5	3.6
US		717.5	784.5	882.0	982.0	1095.0	1210.0	1352.0	1423.4	1494.7	1553.3	1612.0

RESIDENTIAL ELECTRICITY PROJECTIONS - STATE SHARES HIGH CASE ANL/ARAM/AUSM 3/19/86

		1980	1985	1990	1995	2000	2005	2010	2015	2020	2025	2030
AL	1	0.0230	0.0223	0.0219	0.0214	0.0212	0.0209	0.0207	0.0207	0.0207	0.0207	0.0207
AK	2	0.0015	0.0018	0.0017	0.0017	0.0017	0.0018	0.0017	0.0017	0.0017	0.0017	0.0017
AZ	4	0.0134	0.0146	0.0159	0.0169	0.0178	0.0188	0.0196	0.0196	0.0196	0.0196	0.0196
AR	5	0.0143	0.0141	0.0142	0.0144	0.0145	0.0145	0.0144	0.0144	0.0144	0.0144	0.0144
CA	6	0.0725	0.0757	0.0787	0.0805	0.0823	0.0836	0.0844	0.0844	0.0844	0.0844	0.0844
CO	8	0.0093	0.0100	0.0104	0.0107	0.0111	0.0115	0.0118	0.0118	0.0118	0.0118	0.0118
CT	9	0.0115	0.0111	0.0110	0.0110	0.0109	0.0108	0.0107	0.0107	0.0107	0.0107	0.0107
DE	10	0.0026	0.0026	0.0025	0.0025	0.0025	0.0025	0.0025	0.0025	0.0025	0.0025	0.0025
DC	11	0.0015	0.0014	0.0013	0.0012	0.0012	0.0012	0.0012	0.0012	0.0012	0.0012	0.0012
FL	12	0.0624	0.0681	0.0731	0.0775	0.0816	0.0861	0.0897	0.0897	0.0897	0.0897	0.0897
GA	13	0.0279	0.0288	0.0293	0.0296	0.0298	0.0301	0.0304	0.0304	0.0304	0.0304	0.0304
HI	15	0.0026	0.0027	0.0027	0.0028	0.0028	0.0029	0.0029	0.0029	0.0029	0.0029	0.0029
ID	16	0.0069	0.0069	0.0068	0.0068	0.0067	0.0066	0.0065	0.0065	0.0065	0.0065	0.0065
IL	17	0.0417	0.0396	0.0383	0.0372	0.0362	0.0354	0.0346	0.0346	0.0346	0.0346	0.0346
IN	18	0.0268	0.0254	0.0246	0.0238	0.0231	0.0223	0.0217	0.0217	0.0217	0.0217	0.0217
IA	19	0.0140	0.0131	0.0125	0.0119	0.0115	0.0111	0.0108	0.0108	0.0108	0.0108	0.0108
KS	20	0.0100	0.0098	0.0096	0.0094	0.0092	0.0091	0.0090	0.0090	0.0090	0.0090	0.0090
KY	21	0.0182	0.0176	0.0173	0.0169	0.0167	0.0166	0.0164	0.0164	0.0164	0.0164	0.0164
LA	22	0.0235	0.0241	0.0239	0.0246	0.0251	0.0255	0.0258	0.0258	0.0258	0.0258	0.0258
ME	23	0.0042	0.0041	0.0041	0.0041	0.0040	0.0040	0.0040	0.0040	0.0040	0.0040	0.0040
MD	24	0.0169	0.0166	0.0165	0.0162	0.0161	0.0160	0.0159	0.0159	0.0159	0.0159	0.0159
MA	25	0.0161	0.0156	0.0154	0.0154	0.0153	0.0151	0.0149	0.0149	0.0149	0.0149	0.0149
MI	26	0.0310	0.0288	0.0281	0.0269	0.0262	0.0254	0.0248	0.0248	0.0248	0.0248	0.0248
MN	27	0.0164	0.0159	0.0157	0.0153	0.0152	0.0151	0.0150	0.0150	0.0150	0.0150	0.0150
MS	28	0.0139	0.0136	0.0133	0.0131	0.0131	0.0130	0.0130	0.0130	0.0130	0.0130	0.0130
MO	29	0.0260	0.0250	0.0241	0.0232	0.0223	0.0216	0.0210	0.0210	0.0210	0.0210	0.0210
MT	30	0.0041	0.0040	0.0040	0.0040	0.0039	0.0038	0.0037	0.0037	0.0037	0.0037	0.0037
NE	31	0.0077	0.0074	0.0071	0.0067	0.0064	0.0062	0.0060	0.0060	0.0060	0.0060	0.0060
NV	32	0.0052	0.0057	0.0063	0.0068	0.0074	0.0080	0.0084	0.0084	0.0084	0.0084	0.0084
NH	33	0.0035	0.0035	0.0036	0.0036	0.0036	0.0037	0.0037	0.0037	0.0037	0.0037	0.0037
NJ	34	0.0228	0.0222	0.0219	0.0216	0.0210	0.0204	0.0199	0.0199	0.0199	0.0199	0.0199
NM	35	0.0034	0.0036	0.0038	0.0039	0.0040	0.0042	0.0043	0.0043	0.0043	0.0043	0.0043
NY	36	0.0426	0.0412	0.0403	0.0392	0.0383	0.0375	0.0369	0.0369	0.0369	0.0369	0.0369
NC	37	0.0340	0.0341	0.0343	0.0341	0.0339	0.0339	0.0338	0.0338	0.0338	0.0338	0.0338
ND	38	0.0034	0.0034	0.0032	0.0030	0.0029	0.0029	0.0028	0.0028	0.0028	0.0028	0.0028
OH	39	0.0466	0.0440	0.0425	0.0410	0.0397	0.0385	0.0374	0.0374	0.0374	0.0374	0.0374
OK	40	0.0172	0.0181	0.0178	0.0181	0.0183	0.0184	0.0184	0.0184	0.0184	0.0184	0.0184
OR	41	0.0189	0.0183	0.0184	0.0188	0.0188	0.0188	0.0188	0.0188	0.0188	0.0188	0.0188
PA	42	0.0443	0.0420	0.0408	0.0398	0.0387	0.0378	0.0370	0.0370	0.0370	0.0370	0.0370
RI	44	0.0026	0.0025	0.0024	0.0023	0.0022	0.0021	0.0021	0.0021	0.0021	0.0021	0.0021
SC	45	0.0175	0.0178	0.0181	0.0183	0.0184	0.0186	0.0187	0.0187	0.0187	0.0187	0.0187
SD	46	0.0037	0.0035	0.0033	0.0032	0.0030	0.0029	0.0028	0.0028	0.0028	0.0028	0.0028
TN	47	0.0365	0.0358	0.0351	0.0343	0.0337	0.0334	0.0331	0.0331	0.0331	0.0331	0.0331
TX	48	0.0797	0.0856	0.0863	0.0884	0.0897	0.0906	0.0915	0.0915	0.0915	0.0915	0.0915
UT	49	0.0043	0.0047	0.0050	0.0052	0.0053	0.0055	0.0056	0.0056	0.0056	0.0056	0.0056
VT	50	0.0025	0.0025	0.0025	0.0025	0.0025	0.0024	0.0024	0.0024	0.0024	0.0024	0.0024
VA	51	0.0275	0.0277	0.0277	0.0276	0.0276	0.0277	0.0278	0.0278	0.0278	0.0278	0.0278
WA	53	0.0341	0.0341	0.0340	0.0347	0.0349	0.0349	0.0349	0.0349	0.0349	0.0349	0.0349
WV	54	0.0092	0.0088	0.0086	0.0084	0.0082	0.0081	0.0080	0.0080	0.0080	0.0080	0.0080
WI	55	0.0190	0.0182	0.0177	0.0172	0.0168	0.0164	0.0160	0.0160	0.0160	0.0160	0.0160
WY	56	0.0020	0.0021	0.0021	0.0022	0.0022	0.0022	0.0023	0.0023	0.0023	0.0023	0.0023
US		1.0000	1.0000	1.0000	1.0000	1.0000	1.0000	1.0000	1.0000	1.0000	1.0000	1.0000

RESIDENTIAL ELECTRICITY PROJECTIONS - AVERAGE ANNUAL GROWTH RATES (%) HIGH CASE ANL/ARAM/AUSM 3/19/86

		1980-1985	1985-1990	1990-1995	1995-2000	2000-2005	2005-2010	2010-2015	2015-2020	2020-2025	2025-2030
AL	1	1.24	1.96	1.75	1.94	1.80	2.04	1.03	0.98	0.77	0.74
AK	2	5.32	1.66	1.96	2.42	2.23	1.09	1.03	0.98	0.77	0.74
AZ	4	3.58	4.06	3.40	3.30	3.17	3.05	1.03	0.98	0.77	0.74
AR'	5	1.63	2.52	2.46	2.26	1.97	2.23	1.03	0.98	0.77	0.74
CA	6	2.69	3.16	2.66	2.64	2.34	2.45	1.03	0.98	0.77	0.74
CO	8	3.16	3.19	2.86	2.96	2.68	2.72	1.03	0.98	0.77	0.74
CT	9	1.22	2.22	2.04	2.09	1.77	2.09	1.03	0.98	0.77	0.74
DE	10	1.46	2.23	2.11	2.15	2.01	2.28	1.03	0.98	0.77	0.74
DC	11	0.19	0.99	1.30	1.52	1.44	1.97	1.03	0.98	0.77	0.74
FL	12	3.62	3.84	3.35	3.28	3.10	3.09	1.03	0.98	0.77	0.74
GA	13	2.42	2.77	2.33	2.34	2.24	2.44	1.03	0.98	0.77	0.74
HI	15	2.54	2.85	2.55	2.59	2.40	2.55	1.03	0.98	0.77	0.74
ID	16	1.86	2.10	2.21	1.95	1.64	2.00	1.03	0.98	0.77	0.74
IL	17	0.76	1.70	1.55	1.67	1.53	1.80	1.03	0.98	0.77	0.74
IN	18	0.69	1.73	1.49	1.55	1.36	1.65	1.03	0.98	0.77	0.74
IA	19	0.48	1.34	1.28	1.43	1.31	1.63	1.03	0.98	0.77	0.74
KS	20	1.38	1.98	1.66	1.86	1.77	2.06	1.03	0.98	0.77	0.74
KY	21	1.14	1.95	1.76	1.96	1.83	2.08	1.03	0.98	0.77	0.74
LA	22	2.34	2.23	2.74	2.64	2.28	2.53	1.03	0.98	0.77	0.74
ME	23	1.30	2.31	2.14	2.12	1.94	2.19	1.03	0.98	0.77	0.74
MD	24	1.49	2.15	1.91	2.02	1.90	2.16	1.03	0.98	0.77	0.74
MA	25	1.07	2.23	2.06	2.09	1.71	2.06	1.03	0.98	0.77	0.74
MI	26	0.30	1.86	1.29	1.66	1.42	1.74	1.03	0.98	0.77	0.74
MN	27	1.18	2.12	1.70	2.00	1.88	2.10	1.03	0.98	0.77	0.74
MS	28	1.37	1.94	1.89	2.12	1.96	2.20	1.03	0.98	0.77	0.74
MO	29	1.02	1.65	1.34	1.45	1.31	1.69	1.03	0.98	0.77	0.74
MT	30	1.65	2.19	2.08	1.90	1.47	1.83	1.03	0.98	0.77	0.74
NE	31	1.08	1.43	1.03	1.30	1.19	1.55	1.03	0.98	0.77	0.74
NV	32	3.71	4.47	3.98	3.85	3.52	3.44	1.03	0.98	0.77	0.74
NH	33	2.12	2.80	2.38	2.38	2.19	2.38	1.03	0.98	0.77	0.74
NJ	34	1.32	2.09	1.85	1.62	1.43	1.79	1.03	0.98	0.77	0.74
NM	35	2.95	3.18	2.90	2.98	2.69	2.72	1.03	0.98	0.77	0.74
NY	36	1.10	1.91	1.63	1.74	1.58	1.90	1.03	0.98	0.77	0.74
NC	37	1.90	2.44	2.09	2.09	1.99	2.21	1.03	0.98	0.77	0.74
ND	38	1.49	1.33	1.06	1.55	1.46	1.80	1.03	0.98	0.77	0.74
OH	39	0.63	1.66	1.44	1.53	1.39	1.70	1.03	0.98	0.77	0.74
OK	40	2.88	2.11	2.49	2.38	2.10	2.31	1.03	0.98	0.77	0.74
OR	41	1.12	2.50	2.59	2.28	2.00	2.23	1.03	0.98	0.77	0.74
PA	42	0.71	1.80	1.65	1.67	1.52	1.84	1.03	0.98	0.77	0.74
RI	44	0.93	1.80	1.50	1.48	1.11	1.49	1.03	0.98	0.77	0.74
SC	45	2.13	2.70	2.35	2.33	2.20	2.39	1.03	0.98	0.77	0.74
SD	46	1.04	1.25	1.24	1.26	1.11	1.46	1.03	0.98	0.77	0.74
TN	47	1.37	1.99	1.70	1.88	1.79	2.06	1.03	0.98	0.77	0.74
TX	48	3.27	2.54	2.66	2.50	2.22	2.44	1.03	0.98	0.77	0.74
UT	49	3.55	3.67	2.77	2.82	2.56	2.65	1.03	0.98	0.77	0.74
VT	50	1.55	2.39	2.19	2.17	1.97	2.19	1.03	0.98	0.77	0.74
VA	51	1.97	2.35	2.13	2.17	2.10	2.35	1.03	0.98	0.77	0.74
WA	53	1.79	2.37	2.55	2.33	2.01	2.28	1.03	0.98	0.77	0.74
WV	54	0.89	1.92	1.67	1.74	1.73	2.02	1.03	0.98	0.77	0.74
WI	55	0.99	1.85	1.48	1.74	1.53	1.82	1.03	0.98	0.77	0.74
WY	56	2.70	3.15	2.89	2.37	2.06	2.44	1.03	0.98	0.77	0.74
US		1.80	2.37	2.17	2.20	2.02	2.24	1.03	0.98	0.77	0.74

RESIDENTIAL ELECTRICITY PROJECTIONS - SUMMARY TABLE

HIGH CASE ANL/ARAM/AUSM 3/19/86

		BASE YEAR VALUE (10**9 KWH)	AVERAGE ANNUAL GROWTH RATES (%)				RELATIVE GROWTH FROM 1980 MEASURED BY CHANGE IN SHARE (%)			
		1980	1980-2000	2000-2010	2010-2030	1980-2030	1990	2000	2010	2030
AL	1	16.47	1.72	1.92	0.88	1.43	-4.66	-7.80	-9.68	-9.68
AK	2	1.09	2.83	1.66	0.88	1.81	14.48	14.52	9.33	9.33
AZ	4	9.64	3.58	3.11	0.88	2.40	18.36	32.54	45.83	45.83
AR	5	10.23	2.22	2.10	0.88	1.66	-0.10	1.61	1.35	1.35
CA	6	52.01	2.78	2.39	0.88	1.94	8.51	13.49	16.46	16.46
CO	8	6.69	3.04	2.70	0.88	2.10	11.19	19.27	26.07	26.07
CT	9	8.22	1.89	1.93	0.88	1.49	-3.57	-4.75	-6.57	-6.57
DE	10	1.87	1.99	2.15	0.88	1.58	-2.33	-2.88	-2.74	-2.74
DC	11	1.09	1.00	1.70	0.88	1.09	-13.73	-20.07	-23.37	-23.37
FL	12	44.75	3.52	3.09	0.88	2.37	17.29	30.89	43.77	43.77
GA	13	20.03	2.46	2.34	0.88	1.80	5.06	6.59	8.79	8.79
HI	15	1.84	2.64	2.48	0.88	1.90	6.18	10.24	14.02	14.02
ID	16	4.94	2.03	1.82	0.88	1.53	-1.03	-2.05	-4.98	-4.98
IL	17	29.93	1.42	1.66	0.88	1.25	-8.08	-13.14	-17.04	-17.04
IN	18	19.26	1.36	1.50	0.88	1.20	-8.27	-14.10	-19.25	-19.25
IA	19	10.04	1.13	1.47	0.88	1.10	-10.92	-17.88	-23.04	-23.04
KS	20	7.19	1.72	1.91	0.88	1.42	-3.93	-7.87	-9.83	-9.83
KY	21	13.08	1.70	1.96	0.88	1.42	-5.18	-8.18	-9.74	-9.74
LA	22	16.83	2.49	2.40	0.88	1.83	1.95	7.11	10.02	10.02
ME	23	3.00	1.97	2.07	0.88	1.55	-2.72	-3.24	-3.84	-3.84
MD	24	12.12	1.89	2.03	0.88	1.51	-2.60	-4.71	-5.62	-5.62
MA	25	11.57	1.86	1.88	0.88	1.47	-4.20	-5.24	-7.50	-7.50
MI	26	22.26	1.27	1.58	0.88	1.18	-9.45	-15.59	-20.02	-20.02
MN	27	11.75	1.75	1.99	0.88	1.45	-4.19	-7.29	-8.56	-8.56
MS	28	9.96	1.83	2.08	0.88	1.50	-4.11	-5.83	-6.31	-6.31
MO	29	18.65	1.37	1.50	0.88	1.20	-7.08	-14.01	-19.18	-19.18
MT	30	2.92	1.96	1.65	0.88	1.46	-1.60	-3.48	-7.91	-7.91
NE	31	5.52	1.21	1.37	0.88	1.11	-7.84	-16.66	-22.63	-22.63
NV	32	3.70	4.00	3.48	0.88	2.64	21.44	43.60	63.72	63.72
NH	33	2.48	2.42	2.29	0.88	1.78	3.70	5.68	7.31	7.31
NJ	34	16.33	1.72	1.61	0.88	1.36	-3.66	-7.80	-12.41	-12.41
NM	35	2.45	3.00	2.71	0.88	2.09	10.02	18.40	25.23	25.23
NY	36	30.58	1.59	1.74	0.88	1.34	-5.52	-10.09	-13.48	-13.48
NC	37	24.38	2.13	2.10	0.88	1.62	0.81	-0.15	-0.45	-0.45
ND	38	2.46	1.36	1.63	0.88	1.22	-6.44	-14.20	-18.32	-18.32
OH	39	33.46	1.31	1.54	0.88	1.19	-8.85	-14.95	-19.72	-19.72
OK	40	12.31	2.46	2.20	0.88	1.78	4.05	6.61	7.38	7.38
OR	41	13.55	2.12	2.12	0.88	1.62	-2.66	-0.25	-0.36	-0.36
PA	42	31.77	1.46	1.68	0.88	1.27	-7.84	-12.50	-16.32	-16.32
RI	44	1.84	1.43	1.30	0.88	1.18	-6.86	-13.04	-19.84	-19.84
SC	45	12.58	2.38	2.30	0.88	1.76	3.28	4.84	6.55	6.55
SD	46	2.62	1.20	1.28	0.88	1.09	-8.83	-16.86	-23.50	-23.50
TN	47	26.21	1.73	1.93	0.88	1.43	-3.92	-7.60	-9.43	-9.43
TX	48	57.18	2.74	2.33	0.88	1.91	8.31	12.55	14.77	14.77
UT	49	3.12	3.20	2.61	0.88	2.15	15.96	23.07	28.92	28.92
VT	50	1.78	2.07	2.08	0.88	1.60	-1.15	-1.22	-1.72	-1.72
VA	51	19.73	2.15	2.22	0.88	1.66	0.71	0.33	1.24	1.24
WA	53	24.45	2.26	2.14	0.88	1.68	-0.07	2.47	2.57	2.57
WV	54	6.61	1.55	1.87	0.88	1.35	-6.47	-10.80	-13.01	-13.01
WI	55	13.60	1.52	1.67	0.88	1.29	-6.36	-11.48	-15.37	-15.37
WY	56	1.41	2.78	2.25	0.88	1.91	8.53	13.31	14.62	14.62

COMMERCIAL ELECTRICITY PROJECTIONS (10**9 KWH) HIGH CASE ANL/ARAM/AUSM 3/19/86

		1980	1985	1990	1995	2000	2005	2010	2015	2020	2025	2030
AL	1	7.2	8.5	8.7	9.8	11.1	12.1	13.4	14.4	15.5	16.2	16.8
AK	2	0.7	1.1	1.1	1.3	1.4	1.6	1.7	1.8	1.9	2.0	2.1
AZ	4	9.1	12.5	14.2	17.0	19.8	22.4	25.3	27.4	29.4	30.7	32.0
AR	5	5.3	6.7	7.0	8.1	9.0	9.7	10.7	11.6	12.4	13.0	13.5
CA	6	63.4	80.8	89.4	105.1	119.9	132.9	148.6	160.5	172.4	179.9	187.4
CO	8	7.2	9.5	10.6	12.3	14.0	15.4	17.2	18.6	20.0	20.8	21.7
CT	9	7.0	8.9	9.7	11.5	12.7	13.6	14.9	16.1	17.3	18.1	18.8
DE	10	1.5	1.9	2.1	2.4	2.6	2.9	3.2	3.5	3.7	3.9	4.1
DC	11	2.6	2.9	3.1	3.4	3.8	4.1	4.6	5.0	5.4	5.6	5.8
FL	12	27.3	38.0	41.4	48.2	55.0	61.7	70.1	75.8	81.4	84.9	88.5
GA	13	12.0	16.0	17.3	19.9	22.6	25.1	28.3	30.6	32.9	34.3	35.7
HI	15	1.5	1.8	1.9	2.2	2.4	2.7	3.0	3.2	3.5	3.6	3.8
ID	16	4.0	4.7	4.7	5.5	6.1	6.5	7.1	7.7	8.2	8.6	8.9
IL	17	31.6	36.9	38.6	43.0	47.1	50.3	54.8	59.2	63.6	66.4	69.2
IN	18	10.4	12.1	12.6	14.2	15.6	16.6	18.0	19.4	20.9	21.8	22.7
IA	19	5.5	6.4	6.6	7.4	8.3	9.0	10.0	10.8	11.6	12.1	12.6
KS	20	6.8	8.3	8.8	10.1	11.5	12.7	14.3	15.4	16.5	17.3	18.0
KY	21	8.4	9.9	10.2	11.5	13.0	14.1	15.7	16.9	18.2	18.9	19.7
LA	22	12.7	15.5	16.2	18.8	21.1	23.0	25.6	27.7	29.8	31.0	32.3
ME	23	1.7	2.1	2.3	2.7	3.0	3.2	3.5	3.8	4.1	4.2	4.4
MD	24	9.4	11.5	12.1	13.8	15.7	17.5	19.8	21.4	23.0	24.0	24.9
MA	25	13.2	16.2	17.5	20.7	23.1	24.7	27.1	29.3	31.5	32.8	34.2
MI	26	16.7	19.2	19.7	21.8	24.0	25.7	28.0	30.2	32.4	33.8	35.2
MN	27	5.7	7.1	7.5	8.6	9.6	10.6	11.7	12.7	13.6	14.2	14.8
MS	28	5.1	6.0	6.1	6.8	7.6	8.2	9.1	9.8	10.5	11.0	11.5
MO	29	12.9	15.2	15.7	17.8	19.6	21.2	23.3	25.2	27.0	28.2	29.4
MT	30	2.1	2.5	2.6	3.0	3.5	3.7	4.1	4.4	4.8	5.0	5.2
NE	31	4.0	5.0	5.1	5.7	6.2	6.6	7.2	7.7	8.3	8.7	9.0
NV	32	1.8	2.3	2.6	3.2	3.8	4.4	5.1	5.5	5.9	6.2	6.4
NH	33	1.1	1.5	1.6	2.0	2.2	2.4	2.6	2.8	3.0	3.1	3.3
NJ	34	16.9	22.3	23.5	26.1	28.6	30.4	33.1	35.8	38.5	40.1	41.8
NM	35	3.4	4.4	4.8	5.6	6.4	7.1	8.0	8.6	9.3	9.7	10.1
NY	36	42.2	52.6	54.7	60.7	66.6	71.4	78.3	84.5	90.8	94.8	98.7
NC	37	14.2	18.2	19.6	22.5	25.6	28.5	32.0	34.6	37.1	38.7	40.4
ND	38	1.1	1.4	1.4	1.5	1.7	1.7	1.8	2.0	2.1	2.2	2.3
OH	39	23.2	27.2	27.8	30.8	33.7	35.9	39.0	42.2	45.3	47.3	49.2
OK	40	8.9	11.6	12.1	14.1	15.9	17.5	19.4	21.0	22.6	23.5	24.5
OR	41	10.4	11.9	12.4	14.6	16.5	17.9	19.7	21.3	22.9	23.9	24.9
PA	42	21.9	26.2	27.4	30.9	34.1	36.8	40.4	43.7	46.9	48.9	51.0
RI	44	1.9	2.3	2.5	2.9	3.1	3.3	3.5	3.8	4.1	4.3	4.4
SC	45	8.7	11.1	11.9	13.7	15.6	17.3	19.5	21.0	22.6	23.6	24.6
SD	46	1.1	1.4	1.4	1.6	1.7	1.8	2.0	2.1	2.3	2.4	2.5
TN	47	14.2	17.9	18.6	21.0	23.6	25.8	28.5	30.8	33.1	34.6	36.0
TX	48	43.9	59.0	63.5	74.8	85.2	93.8	104.7	113.1	121.5	126.7	132.0
UT	49	3.1	4.1	4.6	5.4	6.2	6.9	7.7	8.4	9.0	9.4	9.8
VT	50	0.9	1.2	1.2	1.5	1.7	1.8	2.0	2.1	2.3	2.4	2.5
VA	51	16.8	21.5	23.4	27.0	30.6	34.3	38.9	42.0	45.1	47.1	49.0
WA	53	13.7	16.8	17.2	20.3	23.0	25.1	27.8	30.0	32.2	33.6	35.0
WV	54	3.7	4.3	4.5	5.1	5.7	6.2	6.9	7.4	8.0	8.3	8.7
WI	55	10.0	12.1	12.4	13.9	15.3	16.4	17.9	19.3	20.7	21.6	22.5
WY	56	1.1	1.5	1.7	2.1	2.4	2.5	2.8	3.1	3.3	3.4	3.6
US		558.8	699.8	744.0	854.0	953.0	1047.0	1162.0	1255.1	1348.2	1406.8	1465.4

		1980	1985	1990	1995	2000	2005	2010	2015	2020	2025	2030
AL	1	0.0128	0.0121	0.0117	0.0115	0.0115	0.0115	0.0115	0.0115	0.0115	0.0115	0.0115
AK	2	0.0013	0.0015	0.0014	0.0015	0.0015	0.0015	0.0014	0.0014	0.0014	0.0014	0.0014
AZ	4	0.0162	0.0179	0.0191	0.0199	0.0207	0.0214	0.0218	0.0218	0.0218	0.0218	0.0218
AR	5	0.0095	0.0095	0.0094	0.0094	0.0094	0.0093	0.0092	0.0092	0.0092	0.0092	0.0092
CA	6	0.1134	0.1154	0.1202	0.1230	0.1252	0.1269	0.1279	0.1279	0.1279	0.1279	0.1279
CO	8	0.0130	0.0136	0.0142	0.0144	0.0146	0.0147	0.0148	0.0148	0.0148	0.0148	0.0148
CT	9	0.0126	0.0128	0.0131	0.0135	0.0133	0.0130	0.0128	0.0128	0.0128	0.0128	0.0128
DE	10	0.0027	0.0028	0.0028	0.0028	0.0028	0.0028	0.0028	0.0028	0.0028	0.0028	0.0028
DC	11	0.0046	0.0042	0.0041	0.0040	0.0040	0.0040	0.0040	0.0040	0.0040	0.0040	0.0040
FL	12	0.0488	0.0543	0.0556	0.0565	0.0574	0.0590	0.0604	0.0604	0.0604	0.0604	0.0604
GA	13	0.0214	0.0229	0.0233	0.0233	0.0236	0.0240	0.0244	0.0244	0.0244	0.0244	0.0244
HI	15	0.0026	0.0026	0.0026	0.0026	0.0026	0.0026	0.0026	0.0026	0.0026	0.0026	0.0026
ID	16	0.0071	0.0066	0.0064	0.0064	0.0063	0.0062	0.0061	0.0061	0.0061	0.0061	0.0061
IL	17	0.0565	0.0528	0.0519	0.0503	0.0491	0.0481	0.0472	0.0472	0.0472	0.0472	0.0472
IN	18	0.0186	0.0172	0.0170	0.0166	0.0163	0.0158	0.0155	0.0155	0.0155	0.0155	0.0155
IA	19	0.0093	0.0092	0.0088	0.0087	0.0087	0.0086	0.0086	0.0086	0.0086	0.0086	0.0086
KS	20	0.0121	0.0118	0.0119	0.0119	0.0120	0.0121	0.0123	0.0123	0.0123	0.0123	0.0123
KY	21	0.0149	0.0141	0.0138	0.0135	0.0135	0.0135	0.0135	0.0135	0.0135	0.0135	0.0135
LA	22	0.0226	0.0222	0.0218	0.0220	0.0220	0.0220	0.0221	0.0221	0.0221	0.0221	0.0221
ME	23	0.0031	0.0031	0.0031	0.0032	0.0031	0.0030	0.0030	0.0030	0.0030	0.0030	0.0030
MD	24	0.0168	0.0164	0.0163	0.0162	0.0164	0.0167	0.0170	0.0170	0.0170	0.0170	0.0170
MA	25	0.0236	0.0232	0.0236	0.0243	0.0241	0.0236	0.0233	0.0233	0.0233	0.0233	0.0233
MI	26	0.0299	0.0274	0.0264	0.0256	0.0250	0.0245	0.0241	0.0241	0.0241	0.0241	0.0241
MN	27	0.0102	0.0101	0.0101	0.0101	0.0101	0.0101	0.0101	0.0101	0.0101	0.0101	0.0101
MS	28	0.0091	0.0085	0.0082	0.0079	0.0079	0.0079	0.0078	0.0078	0.0078	0.0078	0.0078
MO	29	0.0232	0.0217	0.0211	0.0208	0.0205	0.0202	0.0200	0.0200	0.0200	0.0200	0.0200
MT	30	0.0037	0.0036	0.0035	0.0036	0.0036	0.0036	0.0035	0.0035	0.0035	0.0035	0.0035
NE	31	0.0072	0.0072	0.0069	0.0067	0.0065	0.0063	0.0062	0.0062	0.0062	0.0062	0.0062
NV	32	0.0032	0.0033	0.0035	0.0037	0.0040	0.0042	0.0044	0.0044	0.0044	0.0044	0.0044
NH	33	0.0020	0.0021	0.0022	0.0023	0.0023	0.0022	0.0022	0.0022	0.0022	0.0022	0.0022
NJ	34	0.0302	0.0318	0.0316	0.0306	0.0298	0.0290	0.0285	0.0285	0.0285	0.0285	0.0285
NM	35	0.0060	0.0062	0.0064	0.0066	0.0067	0.0068	0.0069	0.0069	0.0069	0.0069	0.0069
NY	36	0.0755	0.0752	0.0736	0.0711	0.0695	0.0682	0.0674	0.0674	0.0674	0.0674	0.0674
NC	37	0.0254	0.0260	0.0263	0.0264	0.0267	0.0272	0.0275	0.0275	0.0275	0.0275	0.0275
ND	38	0.0020	0.0020	0.0019	0.0018	0.0017	0.0016	0.0016	0.0016	0.0016	0.0016	0.0016
OH	39	0.0415	0.0388	0.0374	0.0361	0.0351	0.0343	0.0336	0.0336	0.0336	0.0336	0.0336
OK	40	0.0160	0.0166	0.0162	0.0165	0.0166	0.0167	0.0167	0.0167	0.0167	0.0167	0.0167
OR	41	0.0187	0.0170	0.0167	0.0171	0.0172	0.0171	0.0170	0.0170	0.0170	0.0170	0.0170
PA	42	0.0391	0.0374	0.0368	0.0362	0.0356	0.0351	0.0348	0.0348	0.0348	0.0348	0.0348
RI	44	0.0034	0.0033	0.0033	0.0034	0.0033	0.0031	0.0030	0.0030	0.0030	0.0030	0.0030
SC	45	0.0155	0.0158	0.0160	0.0161	0.0163	0.0166	0.0168	0.0168	0.0168	0.0168	0.0168
SD	46	0.0020	0.0019	0.0019	0.0019	0.0018	0.0018	0.0017	0.0017	0.0017	0.0017	0.0017
TN	47	0.0254	0.0256	0.0250	0.0246	0.0246	0.0246	0.0246	0.0246	0.0246	0.0246	0.0246
TX	48	0.0785	0.0842	0.0853	0.0876	0.0889	0.0896	0.0901	0.0901	0.0901	0.0901	0.0901
UT	49	0.0056	0.0059	0.0062	0.0064	0.0065	0.0066	0.0067	0.0067	0.0067	0.0067	0.0067
VT	50	0.0016	0.0017	0.0017	0.0017	0.0017	0.0017	0.0017	0.0017	0.0017	0.0017	0.0017
VA	51	0.0300	0.0308	0.0315	0.0316	0.0320	0.0327	0.0335	0.0335	0.0335	0.0335	0.0335
WA	53	0.0245	0.0240	0.0231	0.0237	0.0240	0.0240	0.0239	0.0239	0.0239	0.0239	0.0239
WV	54	0.0065	0.0062	0.0061	0.0060	0.0059	0.0059	0.0059	0.0059	0.0059	0.0059	0.0059
WI	55	0.0179	0.0173	0.0167	0.0162	0.0159	0.0156	0.0154	0.0154	0.0154	0.0154	0.0154
WY	56	0.0020	0.0021	0.0023	0.0025	0.0025	0.0024	0.0024	0.0024	0.0024	0.0024	0.0024
US		1.0000	1.0000	1.0000	1.0000	1.0000	1.0000	1.0000	1.0000	1.0000	1.0000	1.0000

COMMERCIAL ELECTRICITY PROJECTIONS - AVERAGE ANNUAL GROWTH RATES (%) HIGH CASE ANL/ARAM/AUSM 3/19/86

		1980-1985	1985-1990	1990-1995	1995-2000	2000-2005	2005-2010	2010-2015	2015-2020	2020-2025	2025-2030
AL	1	3.43	0.59	2.40	2.37	1.75	2.05	1.55	1.44	0.85	0.82
AK	2	7.91	-0.08	3.58	2.33	2.36	0.88	1.55	1.44	0.85	0.82
AZ	4	6.67	2.61	3.63	3.07	2.48	2.51	1.55	1.44	0.85	0.82
AR	5	4.69	0.92	2.94	2.20	1.59	1.98	1.55	1.44	0.85	0.82
CA	6	4.98	2.05	3.28	2.68	2.07	2.26	1.55	1.44	0.85	0.82
CO	8	5.63	2.06	3.09	2.54	2.01	2.24	1.55	1.44	0.85	0.82
CT	9	4.91	1.71	3.48	1.99	1.37	1.84	1.55	1.44	0.85	0.82
DE	10	5.10	1.25	2.72	2.28	1.84	2.14	1.55	1.44	0.85	0.82
DC	11	2.68	1.04	2.32	2.01	1.72	2.21	1.55	1.44	0.85	0.82
FL	12	6.84	1.72	3.10	2.66	2.35	2.58	1.55	1.44	0.85	0.82
GA	13	6.06	1.57	2.81	2.55	2.16	2.42	1.55	1.44	0.85	0.82
HI	15	4.24	1.33	2.65	2.26	1.84	2.13	1.55	1.44	0.85	0.82
ID	16	3.23	0.40	2.87	2.12	1.32	1.83	1.55	1.44	0.85	0.82
IL	17	3.17	0.91	2.14	1.84	1.35	1.73	1.55	1.44	0.85	0.82
IN	18	3.03	0.89	2.36	1.90	1.27	1.64	1.55	1.44	0.85	0.82
IA	19	3.25	0.45	2.53	2.18	1.71	1.98	1.55	1.44	0.85	0.82
KS	20	4.09	1.25	2.82	2.46	2.07	2.36	1.55	1.44	0.85	0.82
KY	21	3.44	0.72	2.42	2.33	1.75	2.06	1.55	1.44	0.85	0.82
LA	22	4.20	0.83	3.03	2.35	1.74	2.17	1.55	1.44	0.85	0.82
ME	23	4.63	1.35	3.30	1.98	1.39	1.85	1.55	1.44	0.85	0.82
MD	24	4.12	1.12	2.63	2.58	2.21	2.47	1.55	1.44	0.85	0.82
MA	25	4.29	1.53	3.42	2.19	1.37	1.85	1.55	1.44	0.85	0.82
MI	26	2.78	0.53	2.10	1.89	1.38	1.72	1.55	1.44	0.85	0.82
MN	27	4.53	1.11	2.76	2.30	1.86	2.12	1.55	1.44	0.85	0.82
MS	28	3.29	0.34	2.23	2.29	1.64	1.97	1.55	1.44	0.85	0.82
MO	29	3.20	0.74	2.46	2.02	1.56	1.90	1.55	1.44	0.85	0.82
MT	30	3.54	1.04	3.09	2.53	1.51	1.96	1.55	1.44	0.85	0.82
NE	31	4.41	0.42	2.11	1.70	1.27	1.66	1.55	1.44	0.85	0.82
NV	32	5.52	2.68	3.96	3.43	2.92	3.08	1.55	1.44	0.85	0.82
NH	33	6.12	1.96	3.59	2.10	1.61	2.03	1.55	1.44	0.85	0.82
NJ	34	5.70	1.06	2.16	1.80	1.26	1.74	1.55	1.44	0.85	0.82
NM	35	5.40	1.79	3.26	2.71	2.17	2.33	1.55	1.44	0.85	0.82
NY	36	4.51	0.79	2.09	1.87	1.42	1.85	1.55	1.44	0.85	0.82
NC	37	5.06	1.49	2.83	2.61	2.15	2.37	1.55	1.44	0.85	0.82
ND	38	3.81	0.57	1.84	1.53	0.71	1.31	1.55	1.44	0.85	0.82
OH	39	3.20	0.48	2.08	1.77	1.29	1.69	1.55	1.44	0.85	0.82
OK	40	5.36	0.80	3.11	2.45	1.93	2.19	1.55	1.44	0.85	0.82
OR	41	2.71	0.85	3.27	2.42	1.64	2.01	1.55	1.44	0.85	0.82
PA	42	3.67	0.89	2.44	2.00	1.54	1.90	1.55	1.44	0.85	0.82
RI	44	4.25	1.24	3.01	1.77	0.92	1.45	1.55	1.44	0.85	0.82
SC	45	5.01	1.46	2.92	2.57	2.14	2.36	1.55	1.44	0.85	0.82
SD	46	3.68	0.72	2.57	1.71	1.21	1.55	1.55	1.44	0.85	0.82
TN	47	4.81	0.77	2.46	2.34	1.76	2.07	1.55	1.44	0.85	0.82
TX	48	6.09	1.49	3.33	2.65	1.93	2.23	1.55	1.44	0.85	0.82
UT	49	5.65	2.45	3.27	2.63	2.15	2.35	1.55	1.44	0.85	0.82
VT	50	4.75	1.57	3.56	2.13	1.53	1.95	1.55	1.44	0.85	0.82
VA	51	5.11	1.73	2.85	2.57	2.27	2.55	1.55	1.44	0.85	0.82
WA	53	4.16	0.45	3.35	2.53	1.79	2.04	1.55	1.44	0.85	0.82
WV	54	3.35	0.94	2.59	2.01	1.79	2.16	1.55	1.44	0.85	0.82
WI	55	3.94	0.50	2.25	1.92	1.41	1.78	1.55	1.44	0.85	0.82
WY	56	5.64	3.16	3.86	2.39	1.42	2.18	1.55	1.44	0.85	0.82
US		4.60	1.23	2.80	2.33	1.79	2.11	1.55	1.44	0.85	0.82

COMMERCIAL ELECTRICITY PROJECTIONS - SUMMARY TABLE HIGH CASE ANL/ARAM/AUSM 3/19/86

		BASE YEAR VALUE (10**9 KWH)	AVERAGE ANNUAL GROWTH RATES (%)				RELATIVE GROWTH FROM 1980 MEASURED BY CHANGE IN SHARE (%)			
		1980	1980-2000	2000-2010	2010-2030	1980-2030	1990	2000	2010	2030
AL	1	7.17	2.19	1.90	1.17	1.72	-8.49	-10.05	-10.47	-10.47
AK	2	0.73	3.41	1.62	1.17	2.15	9.42	14.01	10.36	10.36
AZ	4	9.06	3.99	2.50	1.17	2.55	18.01	27.47	34.47	34.47
AR	5	5.30	2.68	1.78	1.17	1.89	-1.15	-1.07	-2.66	-2.66
CA	6	63.36	3.24	2.16	1.17	2.19	6.01	10.43	12.78	12.78
CO	8	7.25	3.33	2.13	1.17	2.22	9.60	12.35	14.30	14.30
CT	9	7.03	3.01	1.61	1.17	1.99	3.86	5.60	2.11	2.11
DE	10	1.51	2.83	1.99	1.17	1.99	2.47	1.90	2.32	2.32
DC	11	2.55	2.01	1.96	1.17	1.66	-9.73	-13.16	-13.04	-13.04
FL	12	27.30	3.56	2.46	1.17	2.38	13.86	17.49	23.56	23.56
GA	13	11.95	3.23	2.29	1.17	2.21	8.96	10.22	13.98	13.98
HI	15	1.46	2.62	1.99	1.17	1.91	-1.25	-2.24	-1.89	-1.89
ID	16	3.97	2.15	1.57	1.17	1.64	-10.21	-10.80	-14.03	-14.03
IL	17	31.60	2.01	1.54	1.17	1.58	-8.14	-13.12	-16.54	-16.54
IN	18	10.40	2.04	1.46	1.17	1.57	-8.87	-12.61	-16.73	-16.73
IA	19	5.48	2.09	1.85	1.17	1.67	-9.88	-11.70	-12.57	-12.57
KS	20	6.78	2.65	2.22	1.17	1.97	-2.33	-1.53	1.08	1.08
KY	21	8.35	2.22	1.91	1.17	1.74	-7.84	-9.47	-9.86	-9.86
LA	22	12.65	2.60	1.96	1.17	1.89	-3.83	-2.62	-2.55	-2.55
ME	23	1.71	2.81	1.62	1.17	1.91	0.70	1.47	-1.74	-1.74
MD	24	9.39	2.61	2.34	1.17	1.97	-2.83	-2.43	1.35	1.35
MA	25	13.17	2.85	1.61	1.17	1.93	-0.03	2.36	-0.99	-0.99
MI	26	16.70	1.82	1.55	1.17	1.51	-11.53	-16.28	-19.50	-19.50
MN	27	5.69	2.67	1.99	1.17	1.93	-0.95	-1.21	-0.83	-0.83
MS	28	5.08	2.03	1.80	1.17	1.64	-10.15	-12.74	-13.98	-13.98
MO	29	12.94	2.10	1.73	1.17	1.65	-8.77	-11.60	-13.49	-13.49
MT	30	2.09	2.55	1.73	1.17	1.83	-5.90	-3.57	-5.59	-5.59
NE	31	4.05	2.15	1.47	1.17	1.62	-4.84	-10.71	-14.86	-14.86
NV	32	1.76	3.89	3.00	1.17	2.62	12.12	25.19	38.67	38.67
NH	33	1.11	3.43	1.82	1.17	2.20	11.36	14.47	13.01	13.01
NJ	34	16.89	2.66	1.50	1.17	1.83	4.44	-1.34	-5.63	-5.63
NM	35	3.35	3.28	2.25	1.17	2.23	6.73	11.25	14.61	14.61
NY	36	42.21	2.30	1.63	1.17	1.71	-2.61	-8.01	-10.82	-10.82
NC	37	14.21	2.99	2.26	1.17	2.11	3.48	5.08	8.31	8.31
ND	38	1.13	1.93	1.01	1.17	1.44	-6.84	-14.52	-22.08	-22.08
OH	39	23.21	1.88	1.49	1.17	1.52	-9.95	-15.36	-19.09	-19.09
OK	40	8.92	2.92	2.06	1.17	2.04	1.49	3.69	4.82	4.82
OR	41	10.43	2.31	1.82	1.17	1.75	-10.45	-7.97	-9.09	-9.09
PA	42	21.86	2.25	1.72	1.17	1.71	-5.96	-9.06	-11.07	-11.07
RI	44	1.88	2.56	1.18	1.17	1.73	-1.65	-3.28	-10.31	-10.31
SC	45	8.67	2.98	2.25	1.17	2.11	3.08	4.97	8.12	8.12
SD	46	1.13	2.16	1.38	1.17	1.61	-6.73	-10.49	-15.40	-15.40
TN	47	14.18	2.58	1.92	1.17	1.88	-1.30	-2.83	-3.15	-3.15
TX	48	43.87	3.37	2.08	1.17	2.23	8.67	13.29	14.76	14.76
UT	49	3.11	3.51	2.25	1.17	2.31	11.59	16.19	19.65	19.65
VT	50	0.92	2.99	1.74	1.17	2.01	2.37	5.22	3.08	3.08
VA	51	16.78	3.06	2.41	1.17	2.17	4.98	6.55	11.44	11.44
WA	53	13.71	2.61	1.91	1.17	1.89	-5.82	-2.27	-2.59	-2.59
WV	54	3.65	2.22	1.97	1.17	1.75	-7.18	-9.52	-9.29	-9.29
WI	55	9.98	2.15	1.59	1.17	1.64	-6.58	-10.81	-13.88	-13.88
WY	56	1.13	3.76	1.80	1.17	2.32	15.49	21.99	20.19	20.19

MANUFACTURING ELECTRICITY PROJECTIONS (10**9 KWH) HIGH CASE ANL/ARAM/AUSH 3/19/86

		1980	1985	1990	1995	2000	2005	2010	2015	2020	2025	2030
AL	1	25.9	29.5	39.5	48.0	56.8	67.5	81.0	89.3	97.5	106.7	116.0
AK	2	0.8	0.8	1.1	1.4	1.6	1.8	2.1	2.4	2.6	2.8	3.1
AZ	4	3.7	4.8	6.6	8.3	10.2	12.4	14.9	16.4	17.9	19.6	21.3
AR	5	10.0	11.4	15.6	19.3	22.8	26.9	32.1	35.4	38.7	42.3	46.0
CA	6	38.8	45.5	61.1	75.8	91.4	110.0	132.2	145.8	159.3	174.3	189.3
CO	8	3.8	4.6	6.4	8.1	10.1	12.5	15.3	16.9	18.5	20.2	21.9
CT	9	6.0	6.4	8.4	10.5	12.8	15.4	18.6	20.5	22.4	24.5	26.7
DE	10	2.5	2.8	3.6	4.4	5.3	6.2	7.4	8.2	8.9	9.8	10.6
DC	11	0.1	0.1	0.2	0.2	0.3	0.3	0.4	0.4	0.4	0.5	0.5
FL	12	12.9	16.4	22.4	28.3	34.2	40.9	49.4	54.4	59.5	65.1	70.7
GA	13	18.0	21.0	26.9	32.2	37.7	44.0	52.2	57.5	62.8	68.7	74.7
HI	15	0.8	0.9	1.2	1.4	1.7	1.9	2.3	2.5	2.7	3.0	3.2
ID	16	5.0	5.7	7.7	9.5	11.1	13.0	15.4	17.0	18.6	20.3	22.1
IL	17	31.3	29.7	37.9	45.2	53.1	62.9	75.1	82.7	90.4	98.9	107.5
IN	18	28.7	31.2	40.0	48.9	57.4	67.5	80.4	88.6	96.8	105.9	115.1
IA	19	7.7	7.5	9.5	11.3	13.0	15.2	17.9	19.8	21.6	23.6	25.7
KS	20	5.5	5.8	7.7	9.7	11.6	14.1	17.3	19.0	20.8	22.8	24.7
KY	21	26.8	28.4	37.5	45.9	54.9	65.8	79.4	87.5	95.6	104.6	113.6
LA	22	33.7	32.5	43.0	52.7	62.1	73.5	88.5	97.5	106.6	116.6	126.7
ME	23	7.1	7.9	10.6	13.0	15.5	18.5	22.4	24.7	27.0	29.5	32.0
MD	24	8.8	9.1	11.2	13.3	15.7	18.7	22.3	24.6	26.9	29.4	31.9
MA	25	8.3	9.2	12.4	15.7	18.5	22.1	26.5	29.2	31.9	34.9	37.9
MI	26	27.2	30.0	36.3	43.6	52.0	62.6	75.7	83.5	91.2	99.8	108.4
MN	27	7.2	8.4	11.1	13.8	16.5	19.9	24.1	26.6	29.0	31.8	34.5
MS	28	6.1	6.8	9.1	11.1	13.0	15.4	18.4	20.3	22.2	24.3	26.4
MO	29	11.1	12.5	15.9	19.0	22.2	26.1	30.8	33.9	37.1	40.6	44.1
MT	30	4.4	4.4	5.8	7.2	8.5	10.0	12.0	13.2	14.4	15.8	17.1
NE	31	2.7	3.0	3.9	4.7	5.5	6.5	7.7	8.5	9.3	10.1	11.0
NV	32	1.0	1.3	1.7	2.2	2.6	3.2	3.9	4.3	4.7	5.2	5.6
NH	33	1.6	1.9	2.6	3.4	4.4	5.4	6.7	7.4	8.1	8.9	9.6
NJ	34	14.8	16.0	20.3	24.7	29.3	34.9	42.0	46.3	50.6	55.4	60.1
NM	35	0.8	1.0	1.3	1.7	2.0	2.5	3.0	3.3	3.6	4.0	4.3
NY	36	31.4	32.7	41.7	50.0	59.1	70.6	84.8	93.4	102.1	111.8	121.4
NC	37	25.8	29.5	38.6	46.3	54.3	63.8	76.0	83.7	91.5	100.1	108.8
ND	38	0.7	0.9	1.1	1.4	1.6	1.9	2.3	2.5	2.7	3.0	3.2
OH	39	51.5	53.4	67.4	81.4	95.5	112.9	134.8	148.6	162.4	177.7	193.0
OK	40	6.6	7.1	10.4	13.4	16.4	19.9	24.5	26.9	29.4	32.2	35.0
OR	41	12.5	13.2	17.4	21.7	25.7	30.7	37.3	41.2	45.0	49.2	53.5
PA	42	37.1	36.3	46.6	54.5	64.4	76.6	92.0	101.4	110.8	121.3	131.7
RI	44	1.4	1.5	2.0	2.4	2.7	3.1	3.5	3.8	4.2	4.6	5.0
SC	45	17.9	19.8	25.9	31.1	36.5	42.7	50.6	55.7	60.9	66.7	72.4
SD	46	0.5	0.7	0.9	1.0	1.2	1.4	1.7	1.9	2.0	2.2	2.4
TN	47	32.9	37.8	48.8	57.8	67.7	79.7	94.9	104.6	114.3	125.1	135.9
TX	48	69.2	75.7	100.8	123.1	146.6	174.9	211.0	232.6	254.1	278.1	302.1
UT	49	2.6	3.2	4.4	5.5	6.8	8.2	9.9	11.0	12.0	13.1	14.2
VT	50	0.9	1.0	1.5	1.9	2.4	3.0	3.7	4.1	4.5	4.9	5.3
VA	51	12.9	14.9	19.0	22.7	26.7	31.3	37.2	41.0	44.8	49.1	53.3
WA	53	32.5	34.1	45.4	56.6	68.0	81.2	98.0	108.0	118.0	129.2	140.3
WV	54	11.5	10.6	14.2	17.4	20.6	24.4	29.1	32.1	35.0	38.3	41.7
WI	55	14.4	15.2	19.1	22.5	26.6	31.7	38.2	42.1	46.0	50.4	54.7
WY	56	0.5	0.5	0.7	0.9	1.0	1.2	1.5	1.6	1.7	1.9	2.1
US		726.0	784.6	1024.4	1246.0	1477.4	1756.8	2108.3	2323.7	2539.0	2778.8	3018.6

MANUFACTURING ELECTRICITY PROJECTIONS - STATE SHARES HIGH CASE ANL/ARAM/AUSM 3/19/86

		1980	1985	1990	1995	2000	2005	2010	2015	2020	2025	2030
AL	1	0.0357	0.0376	0.0385	0.0385	0.0385	0.0384	0.0384	0.0384	0.0384	0.0384	0.0384
AK	2	0.0011	0.0010	0.0011	0.0011	0.0011	0.0010	0.0010	0.0010	0.0010	0.0010	0.0010
AZ	4	0.0051	0.0062	0.0064	0.0066	0.0069	0.0071	0.0070	0.0070	0.0070	0.0070	0.0070
AR	5	0.0138	0.0146	0.0152	0.0155	0.0154	0.0153	0.0152	0.0152	0.0152	0.0152	0.0152
CA	6	0.0534	0.0580	0.0596	0.0608	0.0619	0.0626	0.0627	0.0627	0.0627	0.0627	0.0627
CO	8	0.0052	0.0059	0.0062	0.0065	0.0068	0.0071	0.0073	0.0073	0.0073	0.0073	0.0073
CT	9	0.0083	0.0082	0.0082	0.0084	0.0087	0.0088	0.0088	0.0088	0.0088	0.0088	0.0088
DE	10	0.0035	0.0036	0.0035	0.0036	0.0036	0.0035	0.0035	0.0035	0.0035	0.0035	0.0035
DC	11	0.0002	0.0002	0.0002	0.0002	0.0002	0.0002	0.0002	0.0002	0.0002	0.0002	0.0002
FL	12	0.0177	0.0209	0.0219	0.0227	0.0231	0.0233	0.0234	0.0234	0.0234	0.0234	0.0234
GA	13	0.0247	0.0267	0.0263	0.0259	0.0255	0.0251	0.0247	0.0247	0.0247	0.0247	0.0247
HI	15	0.0012	0.0012	0.0011	0.0011	0.0011	0.0011	0.0011	0.0011	0.0011	0.0011	0.0011
ID	16	0.0069	0.0073	0.0075	0.0076	0.0075	0.0074	0.0073	0.0073	0.0073	0.0073	0.0073
IL	17	0.0432	0.0379	0.0370	0.0363	0.0359	0.0358	0.0356	0.0356	0.0356	0.0356	0.0356
IN	18	0.0395	0.0398	0.0391	0.0392	0.0388	0.0384	0.0381	0.0381	0.0381	0.0381	0.0381
IA	19	0.0106	0.0095	0.0093	0.0091	0.0088	0.0087	0.0085	0.0085	0.0085	0.0085	0.0085
KS	20	0.0076	0.0074	0.0075	0.0078	0.0079	0.0080	0.0082	0.0082	0.0082	0.0082	0.0082
KY	21	0.0369	0.0363	0.0366	0.0368	0.0371	0.0375	0.0376	0.0376	0.0376	0.0376	0.0376
LA	22	0.0465	0.0414	0.0420	0.0423	0.0420	0.0418	0.0420	0.0420	0.0420	0.0420	0.0420
ME	23	0.0098	0.0100	0.0103	0.0104	0.0105	0.0106	0.0106	0.0106	0.0106	0.0106	0.0106
MD	24	0.0121	0.0117	0.0110	0.0106	0.0106	0.0106	0.0106	0.0106	0.0106	0.0106	0.0106
MA	25	0.0115	0.0117	0.0121	0.0126	0.0125	0.0126	0.0126	0.0126	0.0126	0.0126	0.0126
MI	26	0.0374	0.0383	0.0355	0.0350	0.0352	0.0356	0.0359	0.0359	0.0359	0.0359	0.0359
MN	27	0.0099	0.0107	0.0109	0.0111	0.0112	0.0113	0.0114	0.0114	0.0114	0.0114	0.0114
MS	28	0.0084	0.0087	0.0089	0.0089	0.0088	0.0088	0.0088	0.0088	0.0088	0.0088	0.0088
MO	29	0.0152	0.0159	0.0155	0.0152	0.0150	0.0148	0.0146	0.0146	0.0146	0.0146	0.0146
MT	30	0.0060	0.0056	0.0056	0.0058	0.0057	0.0057	0.0057	0.0057	0.0057	0.0057	0.0057
NE	31	0.0038	0.0038	0.0038	0.0038	0.0037	0.0037	0.0036	0.0036	0.0036	0.0036	0.0036
NV	32	0.0014	0.0016	0.0017	0.0017	0.0018	0.0018	0.0019	0.0019	0.0019	0.0019	0.0019
NH	33	0.0022	0.0024	0.0026	0.0027	0.0029	0.0031	0.0032	0.0032	0.0032	0.0032	0.0032
NJ	34	0.0204	0.0204	0.0198	0.0198	0.0198	0.0199	0.0199	0.0199	0.0199	0.0199	0.0199
NM	35	0.0011	0.0012	0.0013	0.0013	0.0014	0.0014	0.0014	0.0014	0.0014	0.0014	0.0014
NY	36	0.0432	0.0416	0.0408	0.0402	0.0400	0.0402	0.0402	0.0402	0.0402	0.0402	0.0402
NC	37	0.0356	0.0376	0.0376	0.0371	0.0368	0.0363	0.0360	0.0360	0.0360	0.0360	0.0360
ND	38	0.0010	0.0011	0.0011	0.0011	0.0011	0.0011	0.0011	0.0011	0.0011	0.0011	0.0011
OH	39	0.0710	0.0681	0.0658	0.0653	0.0646	0.0643	0.0639	0.0639	0.0639	0.0639	0.0639
OK	40	0.0091	0.0091	0.0102	0.0107	0.0111	0.0113	0.0116	0.0116	0.0116	0.0116	0.0116
OR	41	0.0172	0.0168	0.0170	0.0174	0.0174	0.0175	0.0177	0.0177	0.0177	0.0177	0.0177
PA	42	0.0512	0.0463	0.0455	0.0437	0.0436	0.0436	0.0436	0.0436	0.0436	0.0436	0.0436
RI	44	0.0020	0.0019	0.0019	0.0019	0.0019	0.0017	0.0016	0.0016	0.0016	0.0016	0.0016
SC	45	0.0247	0.0252	0.0253	0.0250	0.0247	0.0243	0.0240	0.0240	0.0240	0.0240	0.0240
SD	46	0.0007	0.0008	0.0008	0.0008	0.0008	0.0008	0.0008	0.0008	0.0008	0.0008	0.0008
TN	47	0.0454	0.0481	0.0476	0.0464	0.0458	0.0454	0.0450	0.0450	0.0450	0.0450	0.0450
TX	48	0.0954	0.0964	0.0984	0.0988	0.0992	0.0995	0.1001	0.1001	0.1001	0.1001	0.1001
UT	49	0.0036	0.0041	0.0043	0.0044	0.0046	0.0047	0.0047	0.0047	0.0047	0.0047	0.0047
VT	50	0.0013	0.0013	0.0014	0.0015	0.0016	0.0017	0.0018	0.0018	0.0018	0.0018	0.0018
VA	51	0.0177	0.0189	0.0186	0.0182	0.0181	0.0178	0.0177	0.0177	0.0177	0.0177	0.0177
WA	53	0.0447	0.0435	0.0443	0.0454	0.0460	0.0462	0.0465	0.0465	0.0465	0.0465	0.0465
WV	54	0.0158	0.0136	0.0139	0.0140	0.0140	0.0139	0.0138	0.0138	0.0138	0.0138	0.0138
WI	55	0.0198	0.0193	0.0187	0.0181	0.0180	0.0181	0.0181	0.0181	0.0181	0.0181	0.0181
WY	56	0.0007	0.0007	0.0007	0.0007	0.0007	0.0007	0.0007	0.0007	0.0007	0.0007	0.0007
		---	---	---	---	---	---	---	---	---	---	---
US		1.0000	1.0000	1.0000	1.0000	1.0000	1.0000	1.0000	1.0000	1.0000	1.0000	1.0000

MANUFACTURING ELECTRICITY PROJECTIONS - AVERAGE ANNUAL GROWTH RATES (%) HIGH CASE ANL/ARAM/AUSM 3/19/86

		1980-1985	1985-1990	1990-1995	1995-2000	2000-2005	2005-2010	2010-2015	2015-2020	2020-2025	2025-2030
AL	1	2.64	6.01	3.98	3.44	3.51	3.71	1.96	1.79	1.82	1.67
AK	2	-0.84	6.56	5.20	2.94	2.58	3.31	1.96	1.79	1.82	1.67
AZ	4	5.44	6.45	4.60	4.21	4.07	3.69	1.96	1.79	1.82	1.67
AR	5	2.69	6.32	4.45	3.36	3.34	3.63	1.96	1.79	1.82	1.67
CA	6	3.25	6.07	4.41	3.81	3.78	3.75	1.96	1.79	1.82	1.67
CO	8	4.13	6.62	4.99	4.39	4.35	4.23	1.96	1.79	1.82	1.67
CT	9	1.38	5.49	4.59	4.08	3.74	3.89	1.96	1.79	1.82	1.67
DE	10	2.34	4.94	4.31	3.50	3.34	3.59	1.96	1.79	1.82	1.67
DC	11	1.13	4.96	3.94	3.37	3.54	3.88	1.96	1.79	1.82	1.67
FL	12	4.94	6.50	4.75	3.85	3.68	3.82	1.96	1.79	1.82	1.67
GA	13	3.14	5.15	3.64	3.19	3.16	3.45	1.96	1.79	1.82	1.67
HI	15	1.52	5.10	4.13	3.04	3.02	3.24	1.96	1.79	1.82	1.67
ID	16	2.88	6.01	4.35	3.18	3.19	3.47	1.96	1.79	1.82	1.67
IL	17	-1.05	4.99	3.58	3.27	3.44	3.60	1.96	1.79	1.82	1.67
IN	18	1.72	5.11	4.07	3.26	3.32	3.55	1.96	1.79	1.82	1.67
IA	19	-0.51	4.86	3.51	2.93	3.12	3.34	1.96	1.79	1.82	1.67
KS	20	1.15	5.78	4.67	3.72	3.89	4.17	1.96	1.79	1.82	1.67
KY	21	1.23	5.70	4.09	3.65	3.71	3.81	1.96	1.79	1.82	1.67
LA	22	-0.74	5.75	4.13	3.34	3.43	3.78	1.96	1.79	1.82	1.67
ME	23	2.04	6.06	4.21	3.63	3.63	3.83	1.96	1.79	1.82	1.67
MD	24	0.83	4.21	3.34	3.44	3.54	3.62	1.96	1.79	1.82	1.67
MA	25	1.92	6.22	4.81	3.39	3.58	3.68	1.96	1.79	1.82	1.67
MI	26	2.02	3.89	3.73	3.56	3.78	3.89	1.96	1.79	1.82	1.67
MN	27	3.16	5.81	4.41	3.62	3.82	3.94	1.96	1.79	1.82	1.67
MS	28	2.33	5.96	3.99	3.23	3.43	3.64	1.96	1.79	1.82	1.67
MO	29	2.43	4.94	3.61	3.18	3.29	3.38	1.96	1.79	1.82	1.67
MT	30	-0.03	5.82	4.42	3.37	3.33	3.67	1.96	1.79	1.82	1.67
NE	31	1.66	5.28	4.02	3.24	3.28	3.51	1.96	1.79	1.82	1.67
NV	32	4.34	6.41	4.74	4.10	4.03	4.02	1.96	1.79	1.82	1.67
NH	33	3.53	7.03	5.32	4.97	4.49	4.42	1.96	1.79	1.82	1.67
NJ	34	1.49	4.89	3.99	3.48	3.60	3.77	1.96	1.79	1.82	1.67
NM	35	4.13	6.47	4.81	4.01	4.09	3.98	1.96	1.79	1.82	1.67
NY	36	0.82	5.03	3.70	3.38	3.62	3.73	1.96	1.79	1.82	1.67
NC	37	2.70	5.50	3.71	3.26	3.26	3.56	1.96	1.79	1.82	1.67
ND	38	3.14	5.39	3.81	3.37	3.43	3.57	1.96	1.79	1.82	1.67
OH	39	0.71	4.77	3.83	3.26	3.40	3.62	1.96	1.79	1.82	1.67
OK	40	1.55	7.88	5.15	4.11	3.96	4.25	1.96	1.79	1.82	1.67
OR	41	1.08	5.63	4.56	3.44	3.63	3.97	1.96	1.79	1.82	1.67
PA	42	-0.44	5.09	3.18	3.41	3.54	3.72	1.96	1.79	1.82	1.67
RI	44	1.21	5.30	4.01	2.68	2.16	2.55	1.96	1.79	1.82	1.67
SC	45	1.96	5.54	3.74	3.22	3.18	3.47	1.96	1.79	1.82	1.67
SD	46	4.63	5.11	3.80	3.35	3.44	3.42	1.96	1.79	1.82	1.67
TN	47	2.78	5.24	3.47	3.21	3.32	3.55	1.96	1.79	1.82	1.67
TX	48	1.79	5.91	4.08	3.55	3.59	3.83	1.96	1.79	1.82	1.67
UT	49	4.45	6.33	4.77	4.06	3.97	3.92	1.96	1.79	1.82	1.67
VT	50	2.15	7.63	5.69	4.54	4.47	4.31	1.96	1.79	1.82	1.67
VA	51	2.90	5.07	3.61	3.26	3.26	3.51	1.96	1.79	1.82	1.67
WA	53	1.01	5.88	4.50	3.74	3.59	3.85	1.96	1.79	1.82	1.67
WV	54	-1.48	5.96	4.13	3.47	3.33	3.60	1.96	1.79	1.82	1.67
WI	55	1.12	4.71	3.32	3.38	3.61	3.78	1.96	1.79	1.82	1.67
WY	56	-0.54	5.89	4.85	3.52	3.35	3.71	1.96	1.79	1.82	1.67
US		1.56	5.48	3.99	3.47	3.52	3.72	1.96	1.79	1.82	1.67

MANUFACTURING ELECTRICITY PROJECTIONS - SUMMARY TABLE

HIGH CASE ANL/ARAM/AUSM 3/19/86

		BASE YEAR VALUE (10**9 KWH)	AVERAGE ANNUAL GROWTH RATES (%)				RELATIVE GROWTH FROM 1980 MEASURED BY CHANGE IN SHARE (%)			
		1980	1980-2000	2000-2010	2010-2030	1980-2030	1990	2000	2010	2030
AL	1	25.88	4.01	3.61	1.81	3.04	8.09	7.86	7.75	7.75
AK	2	0.82	3.43	2.94	1.81	2.68	-6.65	-3.58	-9.70	-9.70
AZ	4	3.71	5.17	3.88	1.81	3.56	26.27	34.68	38.06	38.06
AR	5	10.03	4.20	3.48	1.81	3.09	9.96	11.81	10.34	10.34
CA	6	38.79	4.38	3.76	1.81	3.22	11.63	15.79	17.40	17.40
CO	8	3.78	5.03	4.29	1.81	3.58	19.56	31.11	39.81	39.81
CT	9	5.99	3.87	3.81	1.81	3.03	-0.86	5.05	7.02	7.02
DE	10	2.52	3.77	3.46	1.81	2.92	1.26	2.97	1.42	1.42
DC	11	0.13	3.34	3.71	1.81	2.80	-4.48	-5.17	-4.36	-4.36
FL	12	12.87	5.00	3.75	1.81	3.47	23.58	30.49	32.18	32.18
GA	13	17.96	3.78	3.30	1.81	2.89	6.31	3.14	0.03	0.03
HI	15	0.84	3.44	3.13	1.81	2.72	-1.98	-3.37	-7.85	-7.85
ID	16	4.98	4.10	3.33	1.81	3.02	9.38	9.72	6.69	6.69
IL	17	31.33	2.67	3.52	1.81	2.50	-14.24	-16.73	-17.50	-17.50
IN	18	28.65	3.53	3.43	1.81	2.82	-0.99	-1.62	-3.40	-3.40
IA	19	7.68	2.68	3.23	1.81	2.44	-12.39	-16.59	-19.66	-19.66
KS	20	5.50	3.82	4.03	1.81	3.05	-0.58	3.96	8.11	8.11
KY	21	26.76	3.65	3.76	1.81	2.93	-0.53	0.75	2.14	2.14
LA	22	33.74	3.09	3.61	1.81	2.68	-9.66	-9.61	-9.70	-9.70
ME	23	7.12	3.97	3.73	1.81	3.06	5.22	7.15	8.30	8.30
MD	24	8.78	2.95	3.58	1.81	2.62	-9.22	-12.15	-12.50	-12.50
MA	25	8.34	4.07	3.63	1.81	3.07	5.40	9.21	9.33	9.33
MI	26	27.17	3.30	3.83	1.81	2.81	-5.22	-5.99	-4.03	-4.03
MN	27	7.18	4.24	3.88	1.81	3.19	9.79	12.83	15.71	15.71
MS	28	6.10	3.87	3.53	1.81	2.97	6.24	5.00	4.14	4.14
MO	29	11.07	3.54	3.33	1.81	2.80	1.71	-1.55	-4.25	-4.25
MT	30	4.37	3.37	3.50	1.81	2.77	-6.11	-4.63	-5.72	-5.72
NE	31	2.74	3.54	3.39	1.81	2.82	-0.48	-1.43	-3.57	-3.57
NV	32	1.01	4.90	4.05	1.81	3.48	19.63	27.84	33.23	33.23
NH	33	1.58	5.22	4.46	1.81	3.69	18.70	35.88	47.24	47.24
NJ	34	14.83	3.46	3.68	1.81	2.84	-3.10	-3.06	-2.48	-2.48
NM	35	0.79	4.85	4.04	1.81	3.46	18.71	26.71	31.91	31.91
NY	36	31.35	3.22	3.67	1.81	2.74	-5.64	-7.36	-6.88	-6.88
NC	37	25.83	3.79	3.41	1.81	2.92	5.83	3.35	1.29	1.29
ND	38	0.74	3.92	3.50	1.81	2.99	7.56	6.09	4.84	4.84
OH	39	51.55	3.13	3.51	1.81	2.68	-7.28	-8.95	-9.93	-9.93
OK	40	6.59	4.65	4.10	1.81	3.39	11.83	21.86	27.68	27.68
OR	41	12.52	3.66	3.80	1.81	2.95	-1.65	0.94	2.71	2.71
PA	42	37.14	2.79	3.63	1.81	2.56	-11.13	-14.79	-14.69	-14.69
RI	44	1.44	3.29	2.35	1.81	2.51	-2.53	-6.13	-17.01	-17.01
SC	45	17.95	3.61	3.33	1.81	2.83	2.31	-0.15	-2.94	-2.94
SD	46	0.53	4.22	3.43	1.81	3.09	14.06	12.35	10.34	10.34
TN	47	32.93	3.67	3.43	1.81	2.87	4.93	1.06	-0.77	-0.77
TX	48	69.23	3.82	3.71	1.81	2.99	3.22	4.06	4.98	4.98
UT	49	2.59	4.90	3.95	1.81	3.46	19.80	27.93	32.02	32.02
VT	50	0.91	4.93	4.39	1.81	3.58	13.86	29.96	39.89	39.89
VA	51	12.88	3.71	3.39	1.81	2.88	4.69	1.76	-0.49	-0.49
WA	53	32.46	3.77	3.72	1.81	2.97	-0.82	2.98	3.98	3.98
WV	54	11.47	2.98	3.49	1.81	2.61	-12.11	-11.53	-12.62	-12.62
WI	55	14.36	3.13	3.70	1.81	2.71	-5.66	-9.03	-8.33	-8.33
WY	56	0.52	3.40	3.53	1.81	2.79	-8.15	-4.04	-4.85	-4.85
US		726.05	3.62	3.62	1.81	2.89				

INDUSTRIAL ELECTRICITY PROJECTIONS (10**9 KWH) HIGH CASE ANL/ARAM/AUSM 3/19/86

		1980	1985	1990	1995	2000	2005	2010	2015	2020	2025	2030
AL	1	29.7	33.4	44.8	54.0	64.4	76.7	92.4	101.9	111.3	121.8	132.3
AK	2	1.4	1.6	1.9	2.4	2.7	3.2	3.5	3.8	4.2	4.6	5.0
AZ	4	8.6	11.2	13.9	18.0	22.4	27.3	32.8	36.1	39.5	43.2	46.9
AR	5	12.5	14.0	18.7	23.1	27.1	31.7	37.6	41.5	45.3	49.6	53.9
CA	6	53.6	62.5	84.1	105.9	127.6	153.2	183.9	202.7	221.5	242.4	263.4
CO	8	7.1	8.8	11.7	14.5	17.7	21.4	26.2	28.8	31.5	34.5	37.5
CT	9	6.1	6.6	8.6	10.8	13.2	15.8	19.2	21.1	23.1	25.2	27.4
DE	10	2.5	2.8	3.6	4.4	5.3	6.2	7.4	8.2	8.9	9.8	10.6
DC	11	3.4	3.0	3.1	3.7	4.8	6.0	7.2	8.0	8.7	9.5	10.4
FL	12	21.7	27.4	36.7	45.6	56.1	68.6	84.1	92.6	101.2	110.8	120.3
GA	13	22.2	26.3	33.6	39.9	46.6	54.3	64.3	70.8	77.4	84.7	92.0
HI	15	3.3	3.1	4.1	5.1	6.0	6.9	8.0	8.8	9.6	10.6	11.5
ID	16	5.0	5.7	7.7	9.5	11.1	13.0	15.4	17.0	18.6	20.3	22.1
IL	17	37.0	35.1	45.0	53.4	62.9	74.3	87.9	96.9	105.8	115.8	125.8
IN	18	34.2	36.6	47.3	57.2	66.6	78.0	92.0	101.4	110.8	121.3	131.7
IA	19	9.8	9.5	11.9	14.2	16.4	19.0	22.3	24.6	26.9	29.4	31.9
KS	20	7.9	8.4	10.9	13.7	16.2	19.6	24.2	26.7	29.2	31.9	34.7
KY	21	28.3	30.0	39.5	48.1	57.5	69.0	83.1	91.6	100.1	109.5	119.0
LA	22	33.7	32.5	43.0	52.7	62.1	73.5	88.5	97.5	106.6	116.6	126.7
ME	23	7.4	8.2	10.9	13.4	16.0	19.1	23.0	25.3	27.7	30.3	32.9
MD	24	13.3	14.2	17.7	21.2	25.3	29.8	35.5	39.2	42.8	46.9	50.9
MA	25	9.0	9.9	13.6	17.2	20.4	24.3	29.2	32.2	35.2	38.5	41.8
MI	26	33.6	37.3	46.6	55.1	65.3	78.0	92.8	102.3	111.8	122.4	132.9
MN	27	16.0	18.5	23.0	28.2	33.4	40.1	48.6	53.6	58.6	64.1	69.6
MS	28	8.4	8.9	11.4	13.8	16.2	19.2	22.8	25.2	27.5	30.1	32.7
MO	29	11.2	12.6	16.1	19.2	22.4	26.4	31.1	34.3	37.5	41.0	44.6
MT	30	5.9	5.9	7.8	9.6	11.2	13.0	15.5	17.0	18.6	20.4	22.1
NE	31	4.2	4.6	5.7	6.8	8.0	9.3	11.0	12.1	13.2	14.5	15.7
NV	32	5.0	5.4	8.3	11.1	13.2	17.2	23.6	26.0	28.5	31.1	33.8
NH	33	2.5	3.0	4.1	5.2	6.4	7.7	9.3	10.2	11.2	12.2	13.3
NJ	34	16.9	18.7	23.9	29.0	34.3	40.8	48.9	53.9	58.9	64.4	70.0
NM	35	3.0	3.5	4.7	5.8	7.1	8.5	10.3	11.4	12.4	13.6	14.8
NY	36	34.3	36.4	47.7	57.1	67.8	81.0	97.2	107.2	117.1	128.1	139.2
NC	37	27.7	31.6	41.2	49.3	58.0	68.0	80.9	89.2	97.4	106.6	115.8
ND	38	1.6	1.7	2.2	2.5	2.9	3.4	3.9	4.3	4.7	5.2	5.6
OH	39	58.3	60.0	76.8	92.1	107.9	127.1	150.6	166.0	181.4	198.5	215.7
OK	40	10.4	10.9	14.8	18.8	22.8	27.4	33.2	36.6	40.0	43.8	47.6
OR	41	14.0	14.4	18.9	23.7	28.0	33.4	40.3	44.4	48.6	53.2	57.7
PA	42	48.3	47.2	62.5	73.1	86.6	102.3	121.9	134.4	146.8	160.7	174.6
RI	44	1.4	1.5	2.0	2.4	2.7	3.1	3.5	3.8	4.2	4.6	5.0
SC	45	17.9	19.8	25.9	31.1	36.5	42.7	50.6	55.7	60.9	66.7	72.4
SD	46	1.3	1.5	1.8	2.1	2.4	2.7	3.1	3.4	3.7	4.1	4.5
TN	47	35.4	40.5	51.9	61.5	72.5	85.7	102.5	113.0	123.4	135.1	146.7
TX	48	90.5	98.5	130.1	159.6	188.1	224.6	273.0	300.9	328.7	359.8	390.8
UT	49	4.5	5.4	7.3	9.1	11.1	13.5	16.7	18.4	20.1	22.0	23.9
VT	50	1.3	1.5	2.0	2.6	3.2	3.9	4.7	5.2	5.7	6.2	6.7
VA	51	14.1	16.2	20.8	24.8	29.2	34.4	41.1	45.3	49.5	54.2	58.9
WA	53	32.5	34.1	45.4	56.6	68.0	81.2	98.0	108.0	118.0	129.2	140.3
WV	54	11.8	11.0	14.7	18.0	21.3	25.2	30.0	33.1	36.2	39.6	43.0
WI	55	15.4	16.2	20.4	23.9	28.3	33.7	40.4	44.5	48.6	53.2	57.8
WY	56	4.7	4.4	6.0	7.2	8.4	9.6	11.5	12.6	13.8	15.1	16.4
US		889.9	962.0	1255.9	1527.6	1811.4	2153.9	2584.9	2848.9	3112.9	3406.9	3700.9

INDUSTRIAL ELECTRICITY PROJECTIONS - STATE SHARE HIGH CASE ANL/ARAM/AUSM 3/19/86

		1980	1985	1990	1995	2000	2005	2010	2015	2020	2025	2030
AL	1	0.0334	0.0347	0.0356	0.0353	0.0355	0.0356	0.0358	0.0358	0.0358	0.0358	0.0358
AK	2	0.0015	0.0017	0.0015	0.0016	0.0015	0.0015	0.0013	0.0013	0.0013	0.0013	0.0013
AZ	4	0.0096	0.0117	0.0111	0.0118	0.0124	0.0127	0.0127	0.0127	0.0127	0.0127	0.0127
AR	5	0.0141	0.0145	0.0149	0.0151	0.0149	0.0147	0.0146	0.0146	0.0146	0.0146	0.0146
CA	6	0.0602	0.0650	0.0669	0.0693	0.0704	0.0711	0.0712	0.0712	0.0712	0.0712	0.0712
CO	8	0.0080	0.0092	0.0093	0.0095	0.0097	0.0100	0.0101	0.0101	0.0101	0.0101	0.0101
CT	9	0.0069	0.0068	0.0069	0.0071	0.0073	0.0073	0.0074	0.0074	0.0074	0.0074	0.0074
DE	10	0.0028	0.0029	0.0029	0.0029	0.0029	0.0029	0.0029	0.0029	0.0029	0.0029	0.0029
DC	11	0.0038	0.0031	0.0025	0.0024	0.0027	0.0028	0.0028	0.0028	0.0028	0.0028	0.0028
FL	12	0.0244	0.0285	0.0292	0.0299	0.0310	0.0319	0.0325	0.0325	0.0325	0.0325	0.0325
GA	13	0.0250	0.0273	0.0267	0.0261	0.0257	0.0252	0.0249	0.0249	0.0249	0.0249	0.0249
HI	15	0.0037	0.0032	0.0033	0.0033	0.0033	0.0032	0.0031	0.0031	0.0031	0.0031	0.0031
ID	16	0.0056	0.0060	0.0061	0.0062	0.0061	0.0060	0.0060	0.0060	0.0060	0.0060	0.0060
IL	17	0.0415	0.0365	0.0358	0.0350	0.0347	0.0345	0.0340	0.0340	0.0340	0.0340	0.0340
IN	18	0.0385	0.0381	0.0376	0.0374	0.0368	0.0362	0.0356	0.0356	0.0356	0.0356	0.0356
IA	19	0.0110	0.0098	0.0095	0.0093	0.0090	0.0088	0.0086	0.0086	0.0086	0.0086	0.0086
KS	20	0.0089	0.0087	0.0087	0.0089	0.0090	0.0091	0.0094	0.0094	0.0094	0.0094	0.0094
KY	21	0.0318	0.0312	0.0315	0.0315	0.0318	0.0320	0.0321	0.0321	0.0321	0.0321	0.0321
LA	22	0.0379	0.0338	0.0342	0.0345	0.0343	0.0341	0.0342	0.0342	0.0342	0.0342	0.0342
ME	23	0.0083	0.0085	0.0087	0.0088	0.0088	0.0089	0.0089	0.0089	0.0089	0.0089	0.0089
MD	24	0.0150	0.0147	0.0141	0.0139	0.0139	0.0138	0.0138	0.0138	0.0138	0.0138	0.0138
MA	25	0.0101	0.0103	0.0108	0.0113	0.0112	0.0113	0.0113	0.0113	0.0113	0.0113	0.0113
MI	26	0.0377	0.0383	0.0371	0.0361	0.0361	0.0362	0.0359	0.0359	0.0359	0.0359	0.0359
MN	27	0.0180	0.0192	0.0183	0.0185	0.0184	0.0186	0.0188	0.0188	0.0188	0.0188	0.0188
MS	28	0.0094	0.0092	0.0091	0.0090	0.0090	0.0089	0.0088	0.0088	0.0088	0.0088	0.0088
MO	29	0.0126	0.0131	0.0128	0.0126	0.0124	0.0122	0.0120	0.0120	0.0120	0.0120	0.0120
MT	30	0.0067	0.0061	0.0062	0.0063	0.0062	0.0060	0.0060	0.0060	0.0060	0.0060	0.0060
NE	31	0.0048	0.0048	0.0045	0.0045	0.0044	0.0043	0.0042	0.0042	0.0042	0.0042	0.0042
NV	32	0.0056	0.0056	0.0066	0.0073	0.0073	0.0080	0.0091	0.0091	0.0091	0.0091	0.0091
NH	33	0.0028	0.0032	0.0033	0.0034	0.0035	0.0036	0.0036	0.0036	0.0036	0.0036	0.0036
NJ	34	0.0190	0.0194	0.0190	0.0190	0.0190	0.0189	0.0189	0.0189	0.0189	0.0189	0.0189
NM	35	0.0033	0.0037	0.0037	0.0038	0.0039	0.0040	0.0040	0.0040	0.0040	0.0040	0.0040
NY	36	0.0385	0.0378	0.0380	0.0374	0.0374	0.0376	0.0376	0.0376	0.0376	0.0376	0.0376
NC	37	0.0311	0.0328	0.0328	0.0323	0.0320	0.0316	0.0313	0.0313	0.0313	0.0313	0.0313
ND	38	0.0018	0.0018	0.0017	0.0016	0.0016	0.0016	0.0015	0.0015	0.0015	0.0015	0.0015
OH	39	0.0655	0.0624	0.0611	0.0603	0.0596	0.0590	0.0583	0.0583	0.0583	0.0583	0.0583
OK	40	0.0116	0.0113	0.0118	0.0123	0.0126	0.0127	0.0129	0.0129	0.0129	0.0129	0.0129
OR	41	0.0157	0.0150	0.0150	0.0155	0.0155	0.0155	0.0156	0.0156	0.0156	0.0156	0.0156
PA	42	0.0542	0.0491	0.0498	0.0479	0.0478	0.0475	0.0472	0.0472	0.0472	0.0472	0.0472
RI	44	0.0016	0.0016	0.0016	0.0016	0.0015	0.0014	0.0013	0.0013	0.0013	0.0013	0.0013
SC	45	0.0202	0.0206	0.0206	0.0204	0.0201	0.0198	0.0196	0.0196	0.0196	0.0196	0.0196
SD	46	0.0015	0.0015	0.0014	0.0014	0.0013	0.0013	0.0012	0.0012	0.0012	0.0012	0.0012
TN	47	0.0398	0.0421	0.0413	0.0403	0.0400	0.0398	0.0397	0.0397	0.0397	0.0397	0.0397
TX	48	0.1017	0.1024	0.1036	0.1045	0.1038	0.1043	0.1056	0.1056	0.1056	0.1056	0.1056
UT	49	0.0051	0.0056	0.0058	0.0060	0.0061	0.0063	0.0064	0.0064	0.0064	0.0064	0.0064
VT	50	0.0015	0.0015	0.0016	0.0017	0.0018	0.0018	0.0018	0.0018	0.0018	0.0018	0.0018
VA	51	0.0159	0.0168	0.0165	0.0162	0.0161	0.0160	0.0159	0.0159	0.0159	0.0159	0.0159
WA	53	0.0365	0.0355	0.0362	0.0371	0.0376	0.0377	0.0379	0.0379	0.0379	0.0379	0.0379
WV	54	0.0133	0.0114	0.0117	0.0118	0.0118	0.0117	0.0116	0.0116	0.0116	0.0116	0.0116
WI	55	0.0173	0.0168	0.0162	0.0157	0.0156	0.0156	0.0156	0.0156	0.0156	0.0156	0.0156
WY	56	0.0053	0.0045	0.0048	0.0047	0.0046	0.0045	0.0044	0.0044	0.0044	0.0044	0.0044
US		1.0000	1.0000	1.0000	1.0000	1.0000	1.0000	1.0000	1.0000	1.0000	1.0000	1.0000

INDUSTRIAL ELECTRICITY PROJECTIONS - AVERAGE ANNUAL GROWTH RATES (%) HIGH CASE ANL/ARAM/AUSM 3/19/86

		1980-1985	1985-1990	1990-1995	1995-2000	2000-2005	2005-2010	2010-2015	2015-2020	2020-2025	2025-2030
AL	1	2.38	6.04	3.82	3.58	3.58	3.79	1.96	1.79	1.82	1.67
AK	2	3.27	2.93	5.45	2.38	3.53	1.33	1.96	1.79	1.82	1.67
AZ	4	5.54	4.37	5.31	4.47	3.99	3.75	1.96	1.79	1.82	1.67
AR	5	2.23	5.98	4.35	3.21	3.19	3.50	1.96	1.79	1.82	1.67
CA	6	3.15	6.10	4.72	3.80	3.73	3.72	1.96	1.79	1.82	1.67
CO	8	4.37	5.81	4.42	3.97	3.97	4.05	1.96	1.79	1.82	1.67
CT	9	1.46	5.55	4.62	4.06	3.74	3.90	1.96	1.79	1.82	1.67
DE	10	2.34	4.94	4.31	3.50	3.34	3.59	1.96	1.79	1.82	1.67
DC	11	-2.49	1.10	3.32	5.41	4.48	3.88	1.96	1.79	1.82	1.67
FL	12	4.75	5.99	4.46	4.23	4.11	4.13	1.96	1.79	1.82	1.67
GA	13	3.45	5.00	3.49	3.17	3.12	3.42	1.96	1.79	1.82	1.67
HI	15	-1.30	5.77	4.46	3.18	2.95	3.04	1.96	1.79	1.82	1.67
ID	16	2.88	6.01	4.35	3.18	3.19	3.47	1.96	1.79	1.82	1.67
IL	17	-1.02	5.07	3.50	3.32	3.40	3.41	1.96	1.79	1.82	1.67
IN	18	1.34	5.24	3.89	3.09	3.21	3.36	1.96	1.79	1.82	1.67
IA	19	-0.66	4.69	3.54	2.90	3.05	3.26	1.96	1.79	1.82	1.67
KS	20	1.12	5.50	4.52	3.50	3.90	4.28	1.96	1.79	1.82	1.67
KY	21	1.14	5.67	4.01	3.66	3.69	3.80	1.96	1.79	1.82	1.67
LA	22	-0.74	5.75	4.13	3.34	3.43	3.78	1.96	1.79	1.82	1.67
ME	23	1.98	5.98	4.19	3.60	3.58	3.79	1.96	1.79	1.82	1.67
MD	24	1.21	4.61	3.65	3.54	3.39	3.57	1.96	1.79	1.82	1.67
MA	25	2.03	6.52	4.88	3.38	3.61	3.76	1.96	1.79	1.82	1.67
MI	26	2.13	4.55	3.42	3.46	3.61	3.54	1.96	1.79	1.82	1.67
MN	27	2.89	4.44	4.19	3.42	3.71	3.95	1.96	1.79	1.82	1.67
MS	28	1.20	5.17	3.87	3.29	3.38	3.54	1.96	1.79	1.82	1.67
MO	29	2.41	4.95	3.60	3.17	3.29	3.38	1.96	1.79	1.82	1.67
MT	30	-0.08	5.55	4.36	3.22	2.99	3.50	1.96	1.79	1.82	1.67
NE	31	1.64	4.32	3.76	3.07	3.13	3.41	1.96	1.79	1.82	1.67
NV	32	1.79	8.96	5.91	3.64	5.31	6.62	1.96	1.79	1.82	1.67
NH	33	4.36	6.34	4.72	4.21	3.73	3.82	1.96	1.79	1.82	1.67
NJ	34	2.02	5.05	3.98	3.42	3.48	3.70	1.96	1.79	1.82	1.67
NM	35	3.67	5.68	4.62	3.84	3.85	3.92	1.96	1.79	1.82	1.67
NY	36	1.17	5.58	3.68	3.47	3.63	3.72	1.96	1.79	1.82	1.67
NC	37	2.65	5.44	3.68	3.28	3.24	3.54	1.96	1.79	1.82	1.67
ND	38	1.65	4.42	3.02	3.09	2.80	3.26	1.96	1.79	1.82	1.67
OH	39	0.57	5.05	3.70	3.23	3.32	3.46	1.96	1.79	1.82	1.67
OK	40	0.97	6.29	4.92	3.94	3.79	3.93	1.96	1.79	1.82	1.67
OR	41	0.59	5.54	4.66	3.40	3.55	3.86	1.96	1.79	1.82	1.67
PA	42	-0.43	5.76	3.20	3.43	3.40	3.56	1.96	1.79	1.82	1.67
RI	44	1.21	5.30	4.01	2.68	2.16	2.55	1.96	1.79	1.82	1.67
SC	45	1.96	5.54	3.74	3.22	3.18	3.47	1.96	1.79	1.82	1.67
SD	46	1.80	3.71	3.36	2.70	2.76	2.84	1.96	1.79	1.82	1.67
TN	47	2.73	5.09	3.46	3.34	3.39	3.65	1.96	1.79	1.82	1.67
TX	48	1.69	5.73	4.17	3.34	3.62	3.98	1.96	1.79	1.82	1.67
UT	49	3.64	6.18	4.54	3.97	4.06	4.23	1.96	1.79	1.82	1.67
VT	50	2.55	6.70	5.30	4.04	3.95	3.85	1.96	1.79	1.82	1.67
VA	51	2.80	5.07	3.60	3.34	3.35	3.61	1.96	1.79	1.82	1.67
WA	53	1.01	5.88	4.50	3.74	3.59	3.85	1.96	1.79	1.82	1.67
WV	54	-1.51	6.03	4.12	3.46	3.37	3.59	1.96	1.79	1.82	1.67
WI	55	1.05	4.69	3.28	3.39	3.56	3.70	1.96	1.79	1.82	1.67
WY	56	-1.53	6.65	3.67	3.04	2.83	3.61	1.96	1.79	1.82	1.67
US		1.57	5.48	3.99	3.47	3.52	3.72	1.96	1.79	1.82	1.67

INDUSTRIAL ELECTRICITY PROJECTIONS - SUMMARY TABLE HIGH CASE ANL/ARAM/AUSM 3/19/86

		BASE YEAR VALUE (10**9 KWH)	AVERAGE ANNUAL GROWTH RATES (%)				RELATIVE GROWTH FROM 1980 MEASURED BY CHANGE IN SHARE (%)			
		1980	1980-2000	2000-2010	2010-2030	1980-2030	1990	2000	2010	2030
AL	1	29.69	3.95	3.63	1.81	3.03	6.86	6.53	7.18	7.18
AK	2	1.37	3.50	2.42	1.81	2.61	-3.85	-2.22	-12.95	-12.95
AZ	4	8.59	4.92	3.87	1.81	3.46	14.83	28.36	31.45	31.45
AR	5	12.51	3.93	3.35	1.81	2.96	5.77	6.24	3.49	3.49
CA	6	53.55	4.44	3.73	1.81	3.24	11.25	17.04	18.25	18.25
CO	8	7.12	4.64	4.01	1.81	3.38	16.40	21.77	26.43	26.43
CT	9	6.11	3.91	3.82	1.81	3.05	-0.21	5.79	7.89	7.89
DE	10	2.52	3.77	3.46	1.81	2.92	1.23	2.94	1.39	1.39
DC	11	3.37	1.79	4.18	1.81	2.27	-34.03	-29.92	-26.04	-26.04
FL	12	21.74	4.86	4.12	1.81	3.48	19.51	26.81	33.10	33.10
GA	13	22.21	3.78	3.27	1.81	2.88	7.14	3.10	-0.35	-0.35
HI	15	3.31	2.99	2.99	1.81	2.52	-12.10	-11.35	-16.56	-16.56
ID	16	4.98	4.10	3.33	1.81	3.02	9.36	9.70	6.67	6.67
IL	17	36.96	2.69	3.40	1.81	2.48	-13.82	-16.42	-18.14	-18.14
IN	18	34.24	3.38	3.28	1.81	2.73	-2.19	-4.45	-7.50	-7.50
IA	19	9.79	2.60	3.15	1.81	2.39	-13.78	-17.91	-21.55	-21.55
KS	20	7.92	3.65	4.09	1.81	3.00	-2.06	0.60	5.24	5.24
KY	21	23.33	3.61	3.74	1.81	2.91	-1.20	-0.22	0.97	0.97
LA	22	33.74	3.09	3.61	1.81	2.68	-9.68	-9.63	-9.72	-9.72
ME	23	7.40	3.93	3.69	1.81	3.03	4.51	6.16	6.86	6.86
MD	24	13.34	3.24	3.48	1.81	2.71	-5.76	-7.01	-8.23	-8.28
MA	25	8.95	4.19	3.68	1.81	3.13	7.47	11.68	12.35	12.35
MI	26	33.56	3.39	3.57	1.81	2.79	-1.64	-4.33	-4.75	-4.75
MN	27	16.05	3.73	3.83	1.81	2.98	1.54	2.25	4.34	4.34
MS	28	8.37	3.37	3.46	1.81	2.76	-3.22	-4.58	-6.02	-6.02
MO	29	11.21	3.53	3.33	1.81	2.80	1.61	-1.71	-4.42	-4.42
MT	30	5.94	3.24	3.24	1.81	2.67	-7.52	-7.00	-10.32	-10.32
NE	31	4.25	3.19	3.27	1.81	2.65	-5.03	-7.88	-10.94	-10.94
NV	32	4.95	5.04	5.96	1.81	3.92	18.89	31.33	64.23	64.23
NH	33	2.45	4.91	3.78	1.81	3.43	19.31	28.05	30.02	30.02
NJ	34	16.90	3.61	3.59	1.81	2.88	0.14	-0.13	-0.39	-0.39
NM	35	2.95	4.45	3.88	1.81	3.27	11.84	17.30	20.34	20.34
NY	36	34.31	3.46	3.67	1.81	2.84	-1.50	-2.93	-2.42	-2.42
NC	37	27.71	3.76	3.39	1.81	2.90	5.29	2.76	0.52	0.52
ND	38	1.61	3.04	3.03	1.81	2.54	-4.54	-10.59	-15.55	-15.55
OH	39	58.31	3.13	3.39	1.81	2.65	-6.71	-9.07	-11.05	-11.05
OK	40	10.36	4.01	3.86	1.81	3.10	0.93	7.94	10.46	10.46
OR	41	14.01	3.53	3.70	1.81	2.87	-4.46	-1.70	-0.90	-0.90
PA	42	48.26	2.96	3.48	1.81	2.60	-8.24	-11.87	-13.02	-13.02
RI	44	1.44	3.29	2.35	1.81	2.51	-2.55	-6.16	-17.03	-17.03
SC	45	17.95	3.61	3.33	1.81	2.83	2.29	-0.17	-2.96	-2.96
SD	46	1.34	2.89	2.80	1.81	2.44	-7.03	-13.11	-19.76	-19.76
TN	47	35.41	3.65	3.52	1.81	2.88	3.91	0.64	-0.35	-0.35
TX	48	90.54	3.72	3.80	1.81	2.97	1.81	2.05	3.80	3.80
UT	49	4.53	4.58	4.14	1.81	3.38	14.36	20.31	26.52	26.52
VT	50	1.30	4.64	3.90	1.81	3.35	11.14	21.60	24.93	24.93
VA	51	14.12	3.70	3.48	1.81	2.90	4.20	1.65	0.29	0.29
WA	53	32.46	3.77	3.72	1.81	2.97	-0.84	2.95	3.95	3.95
WV	54	11.84	2.98	3.48	1.81	2.61	-12.02	-11.53	-12.73	-12.73
WI	55	15.37	3.09	3.63	1.81	2.69	-6.13	-9.64	-9.55	-9.55
WY	56	4.70	2.92	3.22	1.81	2.53	-9.48	-12.69	-15.99	-15.99
		880.95	3.62	3.62	1.81	2.80				

TOTAL END-USE ELECTRICITY DEMAND PROJECTIONS (10**9 KWH) HIGH CASE ANL/ARAM/AUSM 3/19/86

		1980	1985	1990	1995	2000	2005	2010	2015	2020	2025	2030
AL	1	53.3	59.4	72.8	84.9	98.6	114.1	133.8	145.8	157.8	170.2	182.6
AK	2	3.2	4.1	4.5	5.4	6.1	7.0	7.4	8.0	8.6	9.2	9.8
AZ	4	27.3	35.3	42.2	51.6	61.7	72.5	84.6	91.4	98.2	104.3	110.5
AR	5	28.0	31.7	38.2	45.3	51.9	58.9	67.9	73.6	79.3	85.0	90.7
CA	6	168.9	202.7	242.9	290.0	337.6	387.2	446.7	483.4	520.1	553.4	586.8
CO	8	21.1	26.2	31.4	37.4	43.8	50.8	59.3	64.2	69.1	73.6	78.1
CT	9	21.4	24.2	28.1	33.1	37.8	42.5	48.5	52.5	56.4	59.9	63.5
DE	10	5.9	6.8	7.9	9.3	10.7	12.2	14.1	15.3	16.4	17.6	18.8
DC	11	7.0	7.0	7.4	8.4	9.9	11.5	13.4	14.6	15.8	16.9	18.1
FL	12	93.8	118.9	142.6	169.9	200.5	234.5	275.4	296.0	316.6	335.0	353.3
GA	13	54.2	64.9	76.8	88.8	101.8	115.9	133.7	144.7	155.7	166.2	176.7
HI	15	6.6	7.0	8.4	10.0	11.5	13.1	14.9	16.2	17.5	18.7	19.9
ID	16	13.9	15.8	18.4	21.7	24.6	27.5	31.4	34.0	36.6	39.1	41.6
IL	17	93.5	103.1	117.4	132.9	149.6	167.5	189.5	205.3	221.2	236.0	250.8
IN	18	63.9	68.6	81.6	94.7	107.4	121.6	139.3	151.7	164.1	176.7	189.4
IA	19	25.3	26.2	29.5	33.3	37.2	41.5	46.8	50.7	54.5	58.2	61.8
KS	20	21.9	24.4	28.3	33.0	37.8	43.4	50.7	54.9	59.2	63.2	67.2
KY	21	49.8	53.7	65.0	76.3	88.8	103.2	121.0	131.9	142.8	154.0	165.2
LA	22	63.2	67.0	80.3	95.6	110.7	127.3	149.0	161.9	174.9	187.8	200.6
ME	23	12.1	13.5	16.8	20.1	23.4	27.1	31.9	34.8	37.7	40.8	43.8
MD	24	34.8	38.7	44.4	51.0	53.6	66.7	76.9	83.2	89.6	95.6	101.5
MA	25	33.7	38.3	44.7	53.1	60.2	67.2	76.5	82.7	88.9	94.5	100.1
MI	26	72.5	79.0	91.0	103.4	118.0	134.4	154.3	167.8	181.3	194.7	208.2
MN	27	33.5	38.1	44.3	51.9	59.7	68.9	80.6	87.6	94.6	101.6	108.6
MS	28	23.4	25.5	29.2	33.5	38.2	43.2	49.5	53.5	57.5	61.3	65.1
MO	29	42.8	47.4	53.1	59.7	66.5	73.7	82.8	89.4	95.9	101.9	107.8
MT	30	10.9	11.6	13.9	16.6	19.0	21.4	24.6	26.8	29.0	31.2	33.3
NE	31	13.8	15.5	17.1	19.1	21.2	23.3	26.2	28.3	30.4	32.4	34.4
NV	32	10.4	12.2	16.5	21.0	25.1	31.2	40.1	43.6	47.0	50.4	53.9
NH	33	6.0	7.3	8.9	10.7	12.6	14.5	16.9	18.3	19.7	21.1	22.5
NJ	34	50.1	58.4	66.7	76.4	85.9	95.8	109.0	118.1	127.1	135.5	143.9
NM	35	8.8	10.7	12.7	15.3	17.9	20.7	24.1	26.1	28.1	29.9	31.8
NY	36	107.1	121.3	137.9	156.3	176.3	197.8	225.4	244.2	263.0	280.2	297.4
NC	37	66.3	76.5	91.0	105.3	120.7	137.4	158.6	171.9	185.1	197.9	210.7
ND	38	5.2	5.8	6.4	7.0	7.8	8.5	9.6	10.3	11.1	11.8	12.5
OH	39	115.0	121.7	142.1	163.2	185.0	209.5	240.3	261.5	282.7	304.0	325.3
OK	40	31.6	36.6	42.6	50.6	58.7	67.1	77.6	83.9	90.1	96.0	101.8
OR	41	33.0	40.7	47.5	56.8	65.1	74.0	85.5	92.5	99.6	106.3	112.9
PA	42	101.9	106.3	125.9	143.1	163.1	184.9	212.4	230.8	249.1	267.2	285.3
RI	44	5.2	5.8	6.6	7.5	8.3	8.9	9.8	10.5	11.3	12.0	12.7
SC	45	39.2	44.8	53.8	62.8	72.2	82.4	95.3	103.4	111.4	119.3	127.1
SD	46	5.1	5.6	6.1	6.8	7.4	8.1	8.9	9.6	10.2	10.9	11.5
TN	47	75.8	86.5	101.5	116.3	133.1	151.8	175.8	190.9	206.0	221.0	236.1
TX	48	191.6	224.6	269.7	321.2	371.5	428.0	501.3	544.1	586.9	628.6	670.3
UT	49	10.8	13.2	16.4	19.7	23.2	27.1	32.0	34.7	37.4	40.0	42.6
VT	50	4.0	4.5	5.4	6.5	7.5	8.6	10.0	10.8	11.6	12.4	13.1
VA	51	50.6	59.5	68.6	78.9	90.1	102.2	117.6	126.9	136.2	144.5	152.8
WA	53	70.6	77.7	92.7	110.9	129.2	148.5	173.0	187.8	202.5	217.1	231.7
WV	54	22.1	22.2	26.8	31.4	36.0	41.2	47.7	51.9	56.1	60.4	64.6
WI	55	38.9	42.6	48.4	54.7	61.9	69.9	79.9	86.6	93.3	99.8	106.2
WY	56	7.2	7.5	9.6	11.5	13.2	14.8	17.3	18.9	20.5	22.0	23.6
US		2166.2	2446.3	2881.9	3363.6	3864.4	4410.9	5098.9	5527.3	5955.8	6367.0	6778.3

TOTAL END-USE ELECTRICITY PROJECTIONS - STATE SHARES HIGH CASE ANL/ARAM/AUSM 3/19/86

		1980	1985	1990	1995	2000	2005	2010	2015	2020	2025	2030
AL	1	0.0246	0.0243	0.0253	0.0252	0.0255	0.0259	0.0262	0.0264	0.0265	0.0267	0.0269
AK	2	0.0015	0.0017	0.0015	0.0016	0.0016	0.0016	0.0014	0.0014	0.0014	0.0014	0.0014
AZ	4	0.0126	0.0144	0.0146	0.0153	0.0160	0.0164	0.0166	0.0165	0.0165	0.0164	0.0163
AR	5	0.0129	0.0130	0.0133	0.0135	0.0134	0.0133	0.0133	0.0133	0.0133	0.0133	0.0134
CA	6	0.0780	0.0829	0.0843	0.0862	0.0874	0.0878	0.0876	0.0875	0.0873	0.0869	0.0866
CO	8	0.0097	0.0107	0.0109	0.0111	0.0113	0.0115	0.0116	0.0116	0.0116	0.0116	0.0115
CT	9	0.0099	0.0099	0.0097	0.0098	0.0098	0.0096	0.0095	0.0095	0.0095	0.0094	0.0094
DE	10	0.0027	0.0028	0.0027	0.0028	0.0028	0.0028	0.0028	0.0028	0.0028	0.0028	0.0028
DC	11	0.0032	0.0029	0.0026	0.0025	0.0026	0.0026	0.0026	0.0026	0.0027	0.0027	0.0027
FL	12	0.0433	0.0486	0.0495	0.0505	0.0519	0.0532	0.0540	0.0536	0.0532	0.0526	0.0521
GA	13	0.0250	0.0265	0.0266	0.0264	0.0263	0.0263	0.0262	0.0262	0.0261	0.0261	0.0261
HI	15	0.0030	0.0029	0.0029	0.0030	0.0030	0.0030	0.0029	0.0029	0.0029	0.0029	0.0029
ID	16	0.0064	0.0065	0.0064	0.0064	0.0064	0.0062	0.0061	0.0061	0.0061	0.0061	0.0061
IL	17	0.0455	0.0422	0.0407	0.0395	0.0387	0.0380	0.0372	0.0372	0.0371	0.0371	0.0370
IN	18	0.0295	0.0280	0.0283	0.0282	0.0278	0.0276	0.0273	0.0274	0.0276	0.0278	0.0279
IA	19	0.0117	0.0107	0.0102	0.0099	0.0096	0.0094	0.0092	0.0092	0.0092	0.0091	0.0091
KS	20	0.0101	0.0100	0.0098	0.0098	0.0098	0.0098	0.0099	0.0099	0.0099	0.0099	0.0099
KY	21	0.0230	0.0220	0.0226	0.0227	0.0230	0.0234	0.0237	0.0239	0.0240	0.0242	0.0244
LA	22	0.0292	0.0274	0.0279	0.0284	0.0286	0.0289	0.0292	0.0293	0.0294	0.0295	0.0296
ME	23	0.0056	0.0055	0.0058	0.0060	0.0061	0.0062	0.0063	0.0063	0.0063	0.0064	0.0065
MD	24	0.0161	0.0158	0.0154	0.0152	0.0152	0.0151	0.0151	0.0151	0.0150	0.0150	0.0150
MA	25	0.0156	0.0157	0.0155	0.0153	0.0156	0.0152	0.0150	0.0150	0.0149	0.0148	0.0148
MI	26	0.0335	0.0323	0.0316	0.0307	0.0305	0.0305	0.0303	0.0304	0.0304	0.0306	0.0307
MN	27	0.0155	0.0156	0.0154	0.0154	0.0154	0.0156	0.0158	0.0158	0.0159	0.0160	0.0160
MS	28	0.0108	0.0104	0.0101	0.0100	0.0099	0.0098	0.0097	0.0097	0.0097	0.0096	0.0096
MO	29	0.0198	0.0194	0.0184	0.0178	0.0172	0.0167	0.0162	0.0162	0.0161	0.0160	0.0159
MT	30	0.0051	0.0047	0.0048	0.0049	0.0049	0.0048	0.0048	0.0048	0.0049	0.0049	0.0049
NE	31	0.0064	0.0063	0.0059	0.0057	0.0055	0.0053	0.0051	0.0051	0.0051	0.0051	0.0051
NV	32	0.0048	0.0050	0.0057	0.0062	0.0065	0.0071	0.0079	0.0079	0.0079	0.0079	0.0079
NH	33	0.0028	0.0030	0.0031	0.0032	0.0032	0.0033	0.0033	0.0033	0.0033	0.0033	0.0033
NJ	34	0.0231	0.0239	0.0231	0.0227	0.0222	0.0217	0.0214	0.0214	0.0213	0.0213	0.0212
NM	35	0.0040	0.0044	0.0044	0.0045	0.0046	0.0047	0.0047	0.0047	0.0047	0.0047	0.0047
NY	36	0.0494	0.0496	0.0479	0.0465	0.0456	0.0448	0.0442	0.0442	0.0442	0.0440	0.0439
NC	37	0.0306	0.0313	0.0316	0.0313	0.0312	0.0312	0.0311	0.0311	0.0311	0.0311	0.0311
ND	38	0.0024	0.0024	0.0022	0.0021	0.0020	0.0019	0.0019	0.0019	0.0019	0.0018	0.0018
OH	39	0.0531	0.0497	0.0493	0.0485	0.0479	0.0475	0.0471	0.0473	0.0475	0.0477	0.0480
OK	40	0.0146	0.0150	0.0148	0.0151	0.0152	0.0152	0.0152	0.0152	0.0151	0.0151	0.0150
OR	41	0.0175	0.0166	0.0165	0.0169	0.0169	0.0168	0.0168	0.0167	0.0167	0.0167	0.0167
PA	42	0.0470	0.0435	0.0437	0.0425	0.0422	0.0419	0.0417	0.0418	0.0418	0.0420	0.0421
RI	44	0.0024	0.0024	0.0023	0.0022	0.0022	0.0020	0.0019	0.0019	0.0019	0.0019	0.0019
SC	45	0.0181	0.0183	0.0187	0.0187	0.0187	0.0187	0.0187	0.0187	0.0187	0.0187	0.0188
SD	46	0.0023	0.0023	0.0021	0.0020	0.0019	0.0018	0.0017	0.0017	0.0017	0.0017	0.0017
TN	47	0.0350	0.0354	0.0352	0.0346	0.0344	0.0344	0.0345	0.0345	0.0346	0.0347	0.0348
TX	48	0.0884	0.0918	0.0936	0.0955	0.0961	0.0970	0.0983	0.0984	0.0985	0.0987	0.0989
UT	49	0.0050	0.0054	0.0057	0.0058	0.0060	0.0061	0.0063	0.0063	0.0063	0.0063	0.0063
VT	50	0.0018	0.0019	0.0019	0.0019	0.0020	0.0020	0.0020	0.0019	0.0019	0.0019	0.0019
VA	51	0.0234	0.0243	0.0238	0.0235	0.0233	0.0232	0.0231	0.0230	0.0229	0.0227	0.0225
WA	53	0.0326	0.0317	0.0322	0.0330	0.0334	0.0337	0.0339	0.0340	0.0340	0.0341	0.0342
WV	54	0.0102	0.0091	0.0093	0.0093	0.0093	0.0093	0.0094	0.0094	0.0094	0.0095	0.0095
WI	55	0.0180	0.0174	0.0168	0.0162	0.0160	0.0158	0.0157	0.0157	0.0157	0.0157	0.0157
WY	56	0.0033	0.0030	0.0033	0.0034	0.0034	0.0034	0.0034	0.0034	0.0034	0.0035	0.0035
US		1.0000	1.0000	1.0000	1.0000	1.0000	1.0000	1.0000	1.0000	1.0000	1.0000	1.0000

TOTAL END-USE ELECTRICITY PROJECTIONS - AVERAGE ANNUAL GROWTH RATES (%) HIGH CASE ANL/ARAM/AUSM 3/19/86

		1980-1985	1985-1990	1990-1995	1995-2000	2000-2005	2005-2010	2010-2015	2015-2020	2020-2025	2025-2030
AL	1	2.18	4.16	3.12	3.04	2.97	3.23	1.73	1.59	1.52	1.42
AK	2	5.09	1.74	3.85	2.40	2.85	1.15	1.59	1.47	1.31	1.23
AZ	4	5.26	3.65	4.12	3.64	3.25	3.15	1.55	1.44	1.22	1.15
AR	5	2.50	3.79	3.49	2.74	2.55	2.88	1.63	1.51	1.39	1.30
CA	6	3.71	3.68	3.61	3.09	2.78	2.90	1.59	1.47	1.25	1.18
CO	8	4.46	3.71	3.53	3.22	3.00	3.15	1.60	1.48	1.28	1.20
CT	9	2.56	2.98	3.35	2.71	2.35	2.70	1.56	1.45	1.23	1.16
DE	10	2.81	3.13	3.29	2.84	2.64	2.92	1.65	1.52	1.37	1.28
DC	11	-0.08	1.06	2.59	3.50	3.06	3.06	1.72	1.58	1.38	1.29
FL	12	4.85	3.70	3.57	3.37	3.19	3.27	1.45	1.35	1.13	1.07
GA	13	3.68	3.41	2.95	2.76	2.63	2.90	1.59	1.48	1.32	1.24
HI	15	1.11	3.83	3.52	2.82	2.57	2.72	1.64	1.51	1.37	1.28
ID	16	2.62	3.13	3.29	2.54	2.28	2.67	1.61	1.49	1.33	1.25
IL	17	0.92	2.63	2.51	2.40	2.28	2.51	1.62	1.50	1.30	1.22
IN	18	1.43	3.53	3.03	2.54	2.51	2.76	1.72	1.58	1.50	1.39
IA	19	0.68	2.40	2.49	2.23	2.18	2.46	1.59	1.47	1.31	1.23
KS	20	2.16	3.01	3.16	2.73	2.79	3.17	1.63	1.50	1.32	1.24
KY	21	1.54	3.89	3.25	3.10	3.04	3.24	1.74	1.60	1.52	1.41
LA	22	1.15	3.70	3.55	2.97	2.83	3.20	1.68	1.55	1.43	1.33
ME	23	2.21	4.46	3.64	3.10	3.01	3.29	1.76	1.62	1.55	1.44
MD	24	2.12	2.79	2.81	2.81	2.63	2.88	1.60	1.48	1.30	1.22
MA	25	2.62	3.13	3.47	2.56	2.24	2.61	1.58	1.46	1.22	1.15
MI	26	1.74	2.86	2.57	2.68	2.65	2.80	1.69	1.56	1.44	1.34
MN	27	2.60	3.10	3.20	2.83	2.92	3.20	1.67	1.54	1.44	1.34
MS	28	1.74	2.76	2.75	2.64	2.51	2.76	1.56	1.45	1.29	1.22
MO	29	2.06	2.30	2.38	2.18	2.06	2.37	1.53	1.42	1.21	1.14
MT	30	1.11	3.74	3.56	2.79	2.39	2.83	1.71	1.57	1.46	1.36
NE	31	2.27	2.01	2.29	2.07	1.96	2.34	1.57	1.45	1.26	1.18
NV	32	3.14	6.26	4.97	3.67	4.39	5.19	1.65	1.52	1.42	1.33
NH	33	3.81	4.17	3.71	3.24	2.89	3.10	1.63	1.51	1.38	1.29
NJ	34	3.10	2.70	2.74	2.38	2.21	2.60	1.61	1.49	1.29	1.21
NM	35	4.15	3.49	3.67	3.22	2.97	3.09	1.61	1.49	1.27	1.19
NY	36	2.52	2.60	2.54	2.43	2.33	2.64	1.62	1.50	1.27	1.20
NC	37	2.92	3.51	2.98	2.76	2.63	2.91	1.62	1.50	1.35	1.26
ND	38	2.06	2.13	1.91	2.11	1.82	2.29	1.52	1.41	1.24	1.17
OH	39	1.14	3.15	2.81	2.54	2.52	2.78	1.70	1.57	1.46	1.36
OK	40	3.01	3.04	3.53	2.99	2.72	2.95	1.57	1.45	1.26	1.19
OR	41	1.37	3.17	3.61	2.79	2.59	2.93	1.60	1.48	1.31	1.23
PA	42	0.86	3.43	2.60	2.65	2.54	2.82	1.67	1.54	1.41	1.32
RI	44	2.27	2.56	2.85	1.98	1.39	1.84	1.55	1.44	1.19	1.13
SC	45	2.72	3.71	3.15	2.82	2.69	2.95	1.64	1.51	1.37	1.28
SD	46	1.85	1.79	2.18	1.81	1.67	1.95	1.48	1.38	1.18	1.11
TN	47	2.68	3.25	2.75	2.74	2.67	2.97	1.66	1.54	1.42	1.32
TX	48	3.23	3.73	3.56	2.95	2.87	3.21	1.65	1.53	1.38	1.29
UT	49	4.21	4.37	3.72	3.32	3.18	3.38	1.65	1.52	1.36	1.27
VT	50	2.64	3.67	3.70	2.93	2.74	2.90	1.58	1.46	1.31	1.23
VA	51	3.28	2.90	2.83	2.68	2.57	2.85	1.53	1.42	1.19	1.12
WA	53	1.92	3.59	3.67	3.10	2.82	3.11	1.65	1.52	1.40	1.31
WV	54	0.08	3.86	3.19	2.78	2.72	3.01	1.70	1.56	1.46	1.36
WI	55	1.80	2.61	2.45	2.52	2.45	2.73	1.62	1.50	1.34	1.26
WY	56	0.58	5.25	3.55	2.80	2.44	3.16	1.74	1.60	1.50	1.39
US		2.46	3.33	3.14	2.81	2.68	2.94	1.63	1.50	1.34	1.26

TOTAL END-USE ELECTRICITY PROJECTIONS - SUMMARY TABLE HIGH CASE ANL/ARAM/AUSM 3/19/86

		BASE YEAR VALUE (10**9 KWH)	AVERAGE ANNUAL GROWTH RATES (%)				RELATIVE GROWTH FROM 1980 MEASURED BY CHANGE IN SHARE (%)			
		1980	1980-2000	2000-2010	2010-2030	1980-2030	1990	2000	2010	2030
AL	1	53.33	3.12	3.10	1.57	2.49	2.63	3.65	6.59	9.41
AK	2	3.19	3.26	2.00	1.40	2.26	5.00	6.46	-1.65	-2.31
AZ	4	27.29	4.17	3.20	1.34	2.84	16.20	26.82	31.73	29.39
AR	5	28.04	3.13	2.72	1.46	2.37	2.44	3.77	2.84	3.34
CA	6	168.92	3.52	2.84	1.37	2.52	8.08	12.04	12.34	11.02
CO	8	21.06	3.73	3.07	1.39	2.66	12.14	16.56	19.57	18.55
CT	9	21.36	2.90	2.52	1.35	2.20	-1.22	-0.71	-3.44	-5.00
DE	10	5.90	3.02	2.78	1.45	2.34	0.72	1.58	1.27	1.66
DC	11	7.01	1.76	3.06	1.49	1.91	-21.10	-20.56	-18.63	-17.66
FL	12	93.79	3.87	3.23	1.25	2.69	14.26	19.83	24.76	20.40
GA	13	54.19	3.20	2.76	1.41	2.39	6.51	5.28	4.79	4.21
HI	15	6.61	2.81	2.65	1.45	2.23	-4.17	-2.35	-3.89	-3.53
ID	16	13.88	2.89	2.47	1.42	2.22	-0.20	-0.82	-4.04	-4.31
IL	17	98.49	2.11	2.39	1.41	1.89	-10.39	-14.84	-18.25	-18.63
IN	18	63.90	2.63	2.63	1.55	2.20	-4.02	-5.76	-7.38	-5.29
IA	19	25.30	1.95	2.32	1.40	1.80	-12.44	-17.53	-21.39	-21.89
KS	20	21.89	2.77	2.98	1.42	2.27	-2.98	-3.27	-1.64	-1.89
KY	21	49.76	2.94	3.14	1.57	2.43	-1.82	0.06	3.30	6.12
LA	22	63.23	2.84	3.02	1.50	2.34	-4.53	-1.85	0.13	1.40
ME	23	12.11	3.35	3.15	1.59	2.60	4.25	8.30	11.92	15.53
MD	24	34.85	2.63	2.76	1.40	2.16	-4.23	-5.77	-6.27	-6.88
MA	25	33.69	2.94	2.43	1.35	2.20	-0.20	0.15	-3.54	-5.08
MI	26	72.51	2.46	2.72	1.51	2.13	-5.65	-8.79	-9.58	-8.26
MN	27	33.49	2.93	3.06	1.50	2.38	-0.48	-0.13	2.27	3.61
MS	28	23.41	2.47	2.64	1.38	2.07	-6.09	-8.61	-10.14	-11.09
MO	29	42.81	2.23	2.22	1.33	1.86	-6.75	-12.89	-17.81	-19.52
MT	30	10.94	2.79	2.63	1.53	2.25	-4.56	-2.73	-4.38	-2.60
NE	31	13.81	2.16	2.15	1.37	1.84	-7.10	-14.06	-19.43	-20.51
NV	32	10.42	4.50	4.79	1.48	3.34	18.83	35.26	63.67	65.23
NH	33	6.04	3.73	3.00	1.45	2.67	11.17	16.62	18.74	19.18
NJ	34	50.12	2.73	2.41	1.40	2.13	0.05	-3.93	-7.62	-8.22
NM	35	8.76	3.63	3.03	1.39	2.61	9.36	14.42	16.90	15.88
NY	36	107.10	2.52	2.49	1.40	2.06	-3.19	-7.72	-10.60	-11.26
NC	37	66.30	3.04	2.77	1.43	2.34	3.13	2.06	1.66	1.58
ND	38	5.19	2.05	2.05	1.34	1.77	-7.49	-15.85	-21.86	-23.34
OH	39	114.97	2.41	2.65	1.53	2.10	-7.11	-9.80	-11.20	-9.58
OK	40	31.59	3.14	2.84	1.37	2.37	1.26	4.07	4.35	3.00
OR	41	37.99	2.73	2.76	1.40	2.20	-5.94	-3.92	-4.40	-5.00
PA	42	101.89	2.33	2.68	1.48	2.08	-7.15	-10.28	-11.42	-10.52
RI	44	5.16	2.41	1.62	1.33	1.82	-4.60	-9.73	-19.69	-21.34
SC	45	39.19	3.10	2.82	1.45	2.38	3.13	3.25	3.33	3.64
SD	46	5.09	1.91	1.81	1.29	1.64	-9.97	-18.22	-25.85	-27.95
TN	47	75.79	2.86	2.82	1.49	2.30	0.67	-1.56	-1.48	-0.46
TX	48	191.59	3.37	3.04	1.46	2.54	5.81	8.69	11.16	11.81
UT	49	10.76	3.91	3.28	1.45	2.79	14.43	20.61	26.23	26.65
VT	50	3.99	3.23	2.82	1.39	2.41	2.51	5.92	6.02	5.18
VA	51	50.62	2.92	2.71	1.32	2.23	1.91	-0.27	-1.27	-3.55
WA	53	70.62	3.07	2.96	1.47	2.40	-1.38	2.58	4.10	4.85
WV	54	22.10	2.47	2.87	1.52	2.17	-8.81	-8.73	-8.23	-6.62
WI	55	38.95	2.34	2.59	1.43	2.03	-6.54	-10.91	-12.80	-12.85
WY	56	7.24	3.03	2.80	1.56	2.39	-0.09	1.85	1.74	4.23
US		2166.24	2.94	2.81	1.43	2.31				

ARGONNE NATIONAL LAB WEST
3 4444 00032384 0