82480

EGG-TMI-7992
C1

Idaho
National
Engineering
Laboratory

Managed
by the U.S.
Department
of Energy

EGG-TMI-7992
February 1988

PATENT CLEARED

INFORMAL REPORT

TMI-2 ACCIDENT EVALUATION PROGRAM SAMPLE ACQUISITION AND EXAMINATION PLAN FOR FY-1988 AND BEYOND

Malcolm L. Russell
Richard K. McCardell
James M. Broughton
Douglas W. Akers

LOAN COPY
THIS REPORT MAY BE RECALLED
AFTER TWO WEEKS. PLEASE
RETURN PROMPTLY TO:
INEL TECHNICAL LIBRARY

~~Gordon Lassahn 10-22-90~~
Susan Chavez 10-17-91

EG&G Idaho

Work performed under
DOE Contract
No. DE-AC07-76ID01570

DISCLAIMER

This book was prepared as an account of work sponsored by an agency of the United States Government. Neither the United States Government nor any agency thereof, nor any of their employees, makes any warranty, express or implied, or assumes any legal liability or responsibility for the accuracy, completeness, or usefulness of any information, apparatus, product or process disclosed, or represents that its use would not infringe privately owned rights. References herein to any specific commercial product, process, or service by trade name, trademark, manufacturer, or otherwise, does not necessarily constitute or imply its endorsement, recommendation, or favoring by the United States Government or any agency thereof The views and opinions of authors expressed herein do not necessarily state or reflect those of the United States Government or any agency thereof.

EGG-TMI-7992

TMI-2 ACCIDENT EVALUATION PROGRAM SAMPLE ACQUISITION AND EXAMINATION PLAN FOR FY-1988 AND BEYOND

Malcolm L. Russell
Richard K. McCardell
James M. Broughton
Douglas W. Akers

Published February 1988

EG&G Idaho, Inc.
Idaho Falls, Idaho 83415

Prepared for the
U.S. Department of Energy
Idaho Operations Office
Under DOE Contract No. DE-AC07-76ID01570

ABSTRACT

The purpose of this document is to update the TMI-2 Accident Evaluation Program Sample Acquisition and Examination Plan to December 1, 1987. Additions to the previous plan (EGG-TMI-7521, February 1987) include the results of sample acquisitions and examinations and reactor disassembly activities conducted between December 1986 and October 1987. The principal findings from recent sample acquisitions and examinations and reactor disassembly activities are as follows:

- A revised estimate of damage and reconfiguration of the core has been developed, as follows:

Core Region		Percent of Core Material
Still standing rod bundle geometry		42
Loose debris (unmelted and previously molten core material mixture) below the cavity in the upper core region (the cavity was 26% of the original core volume)		23
Previously molten core material		35
Retained in core boundary	19	
Escaped from core boundary	16	

- The primary migration path of the molten core material into the lower plenum appears to be: (a) through the baffle plates on the east side (adjacent to core positions P5 and R6) of the core near the core mid-plane; (b) around and through the core bypass region compartments between the baffle plates and the core barrel; (c) through the flow holes in the lower grid to the core support assembly; and (d) through the core support assembly, primarily below core positions P5 and R6.

- The guide tube bottom and nozzle top of the in-core instrument structures below core position R7 are ablated. The nozzle is welded to the reactor vessel head.

CONTENTS

ABSTRACT 11

1. INTRODUCTION 1

1.1 Purpose and Intent 1

1.2 Project Genesis 1

1.3 Background and History 3

2. OVERVIEW 8

2.1 Overview of SA&E Requirements from the Accident Evaluation Program Document 8

2.1.1 Core Bore Samples (Table 3, Tasks 1, 2, 5, and 9 ... 16
2.1.2 Core Debris Grab Samples (Table 3, Tasks 3, 6, 7) .. 16
2.1.3 Topography of the Crust Below the Debris Bed (Table 3, Task 4) 17
2.1.4 Fuel Rod Segments From Distinct Fuel Assemblies (Table 3, Task 8) 17
2.1.5 Retained Fission Products in Containment--Basement Sludge, Concrete Samples (Table 3, Tasks 10, 11) 18
2.1.6 Fission Product Retention in Ex-Vessel Release Pathways (Table 3, Task 12) 18
2.1.7 CSA Samples (Table 3, Task 13) 18
2.1.8 Reactor Vessel Samples (Table 3, Tasks 14, 15) 19
2.1.9 Core Former Wall (Table 3, Task 16) 19
2.1.10 Upper Plenum Surface Temperatures and Deposition (Table 3, Tasks 17, 18) 20

2.2 Development of the SA&E Plan 20

3. REACTOR VESSEL SAMPLE ACQUISITION AND EXAMINATION WORK PLAN 34

3.1 Introduction 34

3.1.1 Preaccident Operations 34
3.1.2 TMI-2 Accident Sequence 46
3.1.3 Postaccident Reactor Vessel Internals Events 50

3.2 Purpose 72

3.3 Accomplishments 73

3.3.1 Sample Acquisition 73
3.3.2 Examination Reports and Records 75
3.3.3 Reactor Vessel Internals Sample Examination Findings 77

3.4 Detailed Work Plan 90

3.4.1 Product 93

3.5 Synopsis 94

4. REACTOR COOLANT SYSTEM SAMPLE ACQUISITION AND EXAMINATION WORK PLAN 96

4.1 Introduction 96

4.2 Purpose 103

4.3 Accomplishments 103

4.3.1 Acquisition 103
4.3.2 Examination 104
4.3.3 Findings 105

4.4 Detailed Work Plan 109

4.5 Synopsis 112

5. EX-REACTOR COOLANT SYSTEM SAMPLE ACQUISITION AND EXAMINATION WORK PLAN 113

5.1 Introduction 113

5.2 Purpose 127

5.3 Accomplishments 127

5.3.1 Introduction 127
5.3.2 Acquisition 134
5.3.3 Examination 135

5.4 Detailed Work Plan 138

5.5 Synopsis 140

6. SAMPLE ACQUISITION AND EXAMINATION PROJECT MANAGEMENT SUPPORT WORK PLAN 142

6.1 Purpose 142

6.2 Accomplishments 142

6.3 Detailed Work Plans 144

7. SUMMARY 147

8. REFERENCES 153

APPENDIX A--TMI-2 ACCIDENT REFERENCE DOCUMENTS LISTING (PRELIMINARY) A-1

APPENDIX B -TMI-2 SAMPLE EXAMINATION PLANS FOR CSNI B-1

APPENDIX C--TMI-2 CORE POSITION COMPONENT IDENTIFICATION MARKING C-1

APPENDIX D--TMI-2 AEP SAMPLE INVENTORY AND DISPOSITION LIST--PRELIMINARY D-1

APPENDIX E--TMI-2 REACTOR VESSEL INTERNAL VIDEO SURVEY AND MONITORING TAPE RECORDING LIST E-1

APPENDIX F -TMI-2 FUEL CANISTER CONTENTS F-1

FIGURES

1. General arrangement of TMI-2 reactor vessel and internals 35

2. Schematic of typical in-core instrument assembly 36

3. TMI-2 core support assembly configuration 37

4. TMI-2 core loading diagram 38

5. Side, top, and cross-sectional views of TMI-2 fuel assembly 39

6. Orifice rod assembly 41

7. Burnable poison rod assembly 42

8. Control rod assembly 43

9. Axial-power-shaping-rod (APSR) assembly 44

10. TMI-2 accident end-state core conditions 49

11. Damage map of the TMI-2 fuel assembly upper grid plate 54

12. Reactor vessel lower head region video survey map 55

13. Resolidified material at bottom of flow distributor head 56

14. Estimated radial configuration of horseshoe-shaped ring of agglomerate core material 58

15. Status of fuel assembly lower end removal on October 6, 1987 61

16. Overlapping-hole drilling pattern 62

17. Fuel debris profile behind core baffle plate (laid flat) 63

18. Locations of resolidified material in lower grid flow holes 64

19. TMI-2 core bore locations 67

20. Core and reactor vessel conditions in October 1987 71

21. TMI-2 reactor coolant system piping and components 97

22. TMI-2 steam generator diagram 98

23. TMI-2 pressurizer layout 99

24. TMI-2 site plan 114

25. General building arrangement at TMI 115

26. TMI-2 reactor building and major components of primary cooling system 116

27. TMI-2 auxiliary and fuel handling buildings 117

28. TMI-2 radioactive material location map 128

29. TMI-2 reactor building basement--fission product inventory sample locations 141

30. TMI-2 AEP SA&E project organization chart 145

C-1. Fuel element ID number orientation C-9

C-2. Control element ID number orientation C-10

C-3. Burnable poison rod assembly retainer C-11

TABLES

1. Prioritized list of technical issues to be addressed via TMI research 9

2. Prioritized list of TMI data needs and sample acquisition tasks 10

3. Summary of prioritized sample acquisition tasks 15

4. TMI-2 sample examination priority list as of May 1987 21

5. TMI-2 accident evaluation in situ measurements and sample acquisitions and examinations 22

6. TMI-2 reactor core composition 45

7. Estimated core region volumes and masses at TMI-2 accident termination 50

8. TMI-2 fuel assembly upper end fitting sample list 60

9. Drilling of TMI-2 lower core region in August 1986 68

10. TMI-2 core bore acquisition summary--preliminary 85

11. Reactor vessel in situ measurement and sample acquisition and examination plan summary 91

12. RCS sample acquisition and examination plan summary 110

13. Matrix table of completed fission product inventories 129

14. TMI-2 AEP sample acquisition and examination work breakdown structure and funding plan 148

15. TMI-2 AEP sample acquisition and examination plan--schedule summary 150

16. Cost breakdown of TMI-2 Accident Evaluation Program sample examination 152

B-1. TMI-2 accident samples for the laboratories of the OECD/CSNI joint task force on TMI-2 ..... B-4

E-1. TMI-2 reactor vessel internal video survey and monitoring tape recording list E-4

F-1. TMI-2 fuel canister contents F-4

TMI-2 ACCIDENT EVALUATION PROGRAM SAMPLE ACQUISITION AND EXAMINATION PLAN FOR FY-1988 AND BEYOND

1. INTRODUCTION

1.1 Purpose and Intent

The purpose of the Three Mile Island Unit 2 (TMI-2) Accident Evaluation Program Sample Acquisition and Examination (AEP SA&E) Program is to develop and implement a test and inspection plan that completes the current-condition characterization of; (a) the TMI-2 equipment that may have been damaged by core damage events and (b) the TMI-2 core fission product inventory. The characterization program includes both sample acquisitions and examinations and in situ measurements. Fission product characterization involves locating the fission products as well as determining their chemical form and material association. The intent of this document is to describe the TMI-2 Sample Acquisition and Examination Plan in a manner that provides sufficient information for "stand alone" comprehensiveness.

1.2 Project Genesis

The TMI-2 sample acquisition and examination will be accomplished in accordance with U.S. Department of Energy (DOE) contractor business practices. These practices require rigorous project planning, control, and reporting to ensure that government-funded research programs are accomplished in a way that maximizes research results and the effective utilization of program resources. The TMI-2 AEP SA&E Plan will provide those assurances.

This Plan is part of the EG&G Idaho, Inc. (EG&G) TMI-2 Programs Project, which is described in the EG&G TMI-2 Programs Division Master Plan, Revision 7 (to be published). Included in this Master Plan is an outline of the TMI-2 Programs Work Breakdown Structure (WBS). The SA&E program is composed of two (Level 4) elements; Sample Acquisition

(WBS No. 751400000) and Sample Examination (WBS No. 755400000). These two elements are within the TMI-2 Accident Evaluation Program (Level 2 WBS No. 75B000000).

The TMI-2 Accident Evaluation Program will accomplish the DOE's program objectives of understanding the TMI-2 accident, disseminating this knowledge to the nuclear industry, and aiding in the resolution of severe accident and source term issues. The program's work is divided into four elements:

1. Examination Requirements and Systems Evaluation,

2. Sample Acquisition and Examination,

3. Data Reduction and Qualification,[a] and

4. Information and Industry Coordination.

The Examination Requirements and Systems Evaluations element is responsible for defining program scope and technical objectives, defining sample acquisition and examination data requirements, determining the accident scenario, and providing a standard problem and applying the research results to aid in the resolution of the severe accident source term issues. The Sample Acquisition and Examination element is responsible for obtaining the specified samples from the TMI site, for examination of the samples, and for reporting the examination results. Data Reduction and Qualification is responsible for developing and maintaining the TMI-2 data base and for evaluating and qualifying on-line instrumentation and recorded data. Information and Industry Coordination is responsible for information transfer, coordination of review and consulting groups, interfacing with other source-term research programs, and coordination of the TMI-2 standard problem exercise.

---

a. Analytical and Experimental Support in Revision 4 of the Master Plan.

The tasks within the four work elements are designed to accomplish the following technical objectives:

- Identify and quantify the parameters and processes which controlled the progression of damage to the lower core support assembly (CSA), instrument penetration nozzles and guide tubes, and possibly to the reactor vessel (RV) lower head,

- Determine the plant-wide fission product behavior (source term), concentrating on release from the fuel and transport and retention in the primary cooling system,

- Provide a data base that contains the examination (and analysis) results,

- Provide a standard problem of the TMI-2 accident that includes the examination results and against which the severe accident analysis codes and methodologies can be benchmarked, and

- Apply the TMI-2 accident evaluation research toward resolution of severe accident source term technical issues.

The Sample Acquisition and Examination element is specifically responsible for the collection of sample materials from the TMI-2 plant, the examination of those samples (to provide the data specified by the Examination Requirements and Systems Evaluation element), the interpretation and reporting of the examination results, and the coordination of examination activities at other laboratories. This program element is also responsible for providing engineering support for the sampling activities and for sample shipment.

1.3 Background and History

Although the March 28, 1979, accident at TMI-2 involved severe damage to the core of the reactor, it had no observable effects on the health and

safety of the public in the area.[1] That such a severe core disruption accident would have no consequent health or safety effects has resulted in the questioning of earlier light water reactor (LWR) safety studies and estimates. In an effort to resolve these questions, several major research programs have been initiated by a variety of organizations concerned with nuclear power safety. The U.S. Nuclear Regulatory Commission (NRC) has embarked on a thorough review of reactor safety issues, particularly the causes and effects of core damage accidents. Industrial organizations have conducted the Industry Degraded Core Rulemaking (IDCOR) program. DOE has established the TMI-2 Program to develop technology for recovery from a serious reactor accident and to conduct relevant research and development that will substantially enhance nuclear power plant safety.

Immediately after the TMI-2 accident, four organizations with interests in both plant recovery and accident data acquisition formally agreed to cooperate in these areas. These organizations, commonly referred to as the GEND Group--General Public Utilities, Electric Power Research Institute, Nuclear Regulatory Commission, and Department of Energy--are presently actively involved in reactor recovery and accident research. At present, DOE is providing a portion of the funds for reactor recovery (in those areas where accident recovery knowledge will be of generic benefit to the U.S. LWR industry), as well as the preponderance of funds for severe accident technical data acquisition (such as the examination of the damaged core). However, the core examination, rather than being an open-ended program of scientific inquiry, must be well planned and executed and must be designed to meet specific technical objectives.

The EG&G involvement with the TMI-2 accident has been continuous, initially providing technical support and consultation from the Idaho National Engineering Laboratory (INEL). In 1979, EG&G received an assignment from DOE to collect, analyze, distribute, and preserve significant technical information available from TMI-2. In 1981, the technical information assignment was expanded to include conducting research and development activities intended to effectively exploit the generic research and development challenges at TMI-2. In conjunction with

this expanded assignment, an organization element for Offsite Core Examination was developed. This evolution continued; in January 1985, DOE agreed to expand the EG&G involvement to include an evaluation of the TMI-2 accident that would develop an understanding of the accident sequence-of-events in the area of core damage and escape of core radionuclides (fission products) and materials. The TMI-2 Accident Evaluation Program document[2] implements the January 1985 agreement, defines the program required to understand the accident, and contains the guidelines and requirements for TMI-2 sample acquisition and examination.

The TMI-2 AEP SA&E Plan evolved from the requirements set forth in Reference 2. The program description provides the guidelines for the postaccident core condition and fission product inventory characterization. Examination requirements documents written previously include the GEND Planning Report 001[3] and the TMI-2 Core Examination Plan.[4] The current program description document is an extension of the preceding examination requirements documents with appropriate additions and changes to account for enhanced understanding of the TMI-2 accident and the resultant refinements in sample and examination requirements.

The already-completed portion of this SA&E program includes in situ measurements and sample acquisition and examinations involving private organizations and state and federal agencies. It has provided the postaccident core and fission product end-state data that indicate the following:

- Large regions of the core exceeded cladding melting (~2200 K), and significant fuel liquefaction by molten zircaloy and some fuel melting occurred with temperatures up to at least 3100 K.

- Core materials relocated into the RV lower plenum region from the core, leaving a void in the upper core region equivalent to approximately 26% of the original core volume. Over 20 metric tons of core and structural materials now reside in the space between the RV bottom head and the elliptical flow distributor.

- Fission product retention in core materials is significant, and the retention of fission products outside the core was primarily in reactor cooling system (RCS) water, water in the basement, and in basement concrete.

Significant consequences resulting from these findings include (a) increased technical interest in the TMI-2 accident because it represents a severe core damage (SCD) event in full-scale and provides evidence of a large difference between actual and predicted SCD event offsite radiation release; (b) a reconsideration of the plans and equipment for defueling the TMI-2 reactor; and (c) an expansion in the TMI-2 accident examination plan to determine the release from the fuel of the lower volatility fission products.

The increased technical interest induced the formation (1986) of a Joint Task Force on Three Mile Island 2 by the Committee for Safety of Nuclear Installations (CSNI) of the Organization for Economic Cooperation and Development (OECD). The task force includes representatives from nine foreign countries that indicated a desire to examine TMI-2 samples. Seventy-eight TMI-2 core material samples were distributed to eight foreign laboratories in 1987.

Section 2 of this report contains an overview of the guidelines and requirements set forth in the TMI-2 Accident Evaluation Program document, a description of what would be required to meet these guidelines and requirements, and a proposal for sample acquisition and examination tasks that can be accomplished within the available resources. Sections 3, 4, and 5 contain details of the proposed SA&E tasks. Section 6 summarizes the technical and administrative support for management of the SA&E Program. Section 7 is a summary containing the cost and schedules for the proposed SA&E program and the summary description of how the authorizing of the performance of work further subdivides the WBS and provides controls during the work accomplishment. Appendix A is a list of TMI-2 accident reference documents for use in planning and performing the SA&E program. Appendix B is the list of specific TMI-2 samples delivered to the CSNI task force.

Appendix C is a GPUN technical bulletin listing the core component identification marking. Appendix D is the TMI-2 AEP sample inventory and disposition list. Appendix E is the library list of tape recordings of video surveys and monitorings of the RV internals. Appendix F is a table showing the contents and INEL storage locations of the TMI-2 core material shipped to INEL in fuel canisters for storage.

2. OVERVIEW

2.1 Overview of SA&E Requirements from the Accident Evaluation Program Document

The TMI-2 Accident Evaluation Program document[2] states that substantial contributions can be made to the resolution of SCD accident technical issues by developing an understanding of the TMI-2 accident sequence and consequences. These issues were combined into three broad technical areas: reactor system thermal-hydraulics, core damage progression and RV failure, and fission product release and transport.

The TMI-2 Accident Evaluation Program document includes a listing of the technical issues to be addressed in TMI research. To ensure optimum results from available program resources, the technical issues were prioritized, as shown in Table 1. Two prioritization criteria were used. The first criterion is the potential of the TMI-2 sample examination data to directly enhance the understanding of each issue. Issues that could be addressed directly using data that can be obtained from TMI were prioritized as high. Low or medium priority was assigned to issues that could not be directly addressed using TMI-2 data. The second prioritization criterion is based on the relative importance of each issue to the understanding of severe accident source terms. These second priorities were obtained from recommended priorities from independent industry research and from engineering judgment of the relationship of the technical issues to the environmental source term.

The SA&E tasks will provide data to identify and quantify the mechanisms controlling core damage progression and fission product release, transport, and retention. The basic data needs, associated samples from the plant, and the overall priority of the acquisition and examination tasks are summarized in Table 2. The relative priority of the acquisition tasks is based on a subjective weighting of the associated technical issues, applicability of the TMI-2 data to the issues, and applicability of

TABLE 1. PRIORITIZED LIST OF TECHNICAL ISSUES TO BE ADDRESSED VIA TMI RESEARCH

	Application of Data to Issue	Priority
Reactor System Thermal-Hydraulics		
1. Coupling between core degradation, RV hydraulics, and fission product behavior (integrated severe accident code)	Direct	High
2. Reactor system natural convection	Indirect	Medium
Core Damage Progression and Reactor Pressure Vessel Failure		
1. Damage progression in core	Direct	High
2. Core slump and collapse	Direct	High
3. RV failure modes	Direct	High
4. Hydrogen generation after core disruption	Indirect	Medium
5. Alpha mode containment failure[a]	Direct	High
Fission Product Release and Transport		
1. Release of low-volatility fission products during fuel degradation	Direct, indirect	High
2. Chemical reactions affecting fission product transport	Indirect	High
3. Tellurium behavior	Indirect	High
4. Fission product and aerosol deposition in the RCS	Indirect	Low
5. Release of control rod materials	Direct	High
6. Aerosol generation mechanisms	Direct, indirect	High
7. Revaporization of fission products in the upper plenum	Indirect	Low
8. Core-concrete interaction	Indirect	Medium

a. Steam-explosion-accelerated missile penetration of reactor building wall.

TABLE 2. PRIORITIZED LIST OF TMI DATA NEEDS AND SAMPLE ACQUISITION TASKS

Primary Data Needs from TMI-2	Sample Data Acquisition Tasks	Prioritization Criteria: Technical[a] Issue(s) Priority	Prioritization Criteria: Data Applicability to Issue	Prioritization Criteria: Data Applicability for Establishing Consistent Accident Scenario	Overall Priority of Acquisition Task	Comments
1. Gross structure of core, core support structures, instrument structures, RPV lower head	a. Video probe data through core bore channels (core and lower plenum)	High	High	High	High	a. Video inspections are high-priority information needs.
	b. Topography of core and lower plenum regions.	High	High	High	High	b. Acoustic characterization of hardpan below debris bed is planned.
	c. Acquisition of core bore	High	High	High	High	c. Qualitative data from core boring will provide valuable insights into damage.
2. Peak temperature, core and core support materials interactions, and core boundary structures.	a. Distinct fuel assembly samples.	High	High	High	High	a. Will provide data on core boundary conditions (radially), control and poison rod behavior, and fuel degradation.
	b. Core bore samples plus video characterization to correlate with examination results	High	High	High	High	b. Core bores are primary samples for determining temperatures, materials, and fission products vs location in the core and lower plenum
	c. Large volume samples of core and lower plenum debris	High	High	High	High	c. Necessary for extrapolating smaller sample material and fission product data and for debeis bed characterization
	d. Core former wall samples.	High	Medium	Medium	Medium-High	d. May not be required if intact.
	e. Core support assembly samples	High	High	High	High	e. Extent of damage (chemical and thermal interactions) needs to be determined
	f. Instrument structures samples	High	High	High	High	f. Very important to assess vessel failure modes
	g. Reactor vessel wall samples.	High	Medium	Medium	Medium-High	g. May not be required if undamaged

TABLE 2. (continued)

Primary Data Needs from TMI-2	Sample Data Acquisition Tasks	Prioritization Criteria: Technical[a] Issue(s) Priority	Prioritization Criteria: Data Applicability to Issue	Prioritization Criteria: Data Applicability for Establishing Consistent Accident Scenario	Overall Priority of Acquisition Task	Comments
	h. Fuel assembly upper grid and/or end boxes	High	Medium	Medium	Medium	h. Judged to be important in establishing core boundary conditions
	i. Fuel rod segments from upper core region.	High	Medium	Low	Medium	i. Important for fission product release
3. Fission product release and transport						
A. Retained fission products in core materials.	a. Distinct fuel assembly samples	High	High	High	High	a. Sufficient examinations are required for characterizing the retained fission products (important high and low-volatility species)
	b. Core bore samples	High	High	High	High	b. Core bore samples are primary sources of data from core and lower plenum
	c. Large volume samples of core and lower plenum debris	High	High	High	High	c. Large volume samples necessary to increase detectability limit for some important radioisotopes
B. Retained fission products on primary cooling system surfaces	a. Upper plenum surface samples	Medium-[c] High	Medium-Low	Medium	Medium	a. Surface deposition is important, however, only undissolvable component remains and is known to be very small. Addition data on horizontal surfaces would be used for evaluating separate-effects experiments.
	b. Primary cooling surface samples o Access covers from SG's and pressurizer o Sediment from SG's and pressurizer o RTD's	Medium High[c]	Low	Medium	Medium	b. Surface deposition is important, however, only undissolvable component remains and is known to be very small. Samples from accessible locations will complete RCS inventory. Sample locations include A- and B-loop steam generators, manhole access covers (surface deposits and any accessible sediment), pressurizer, and hot leg RTD thermowells.

TABLE 2. (continued)

Primary Data Needs from TMI-2	Sample Data Acquisition Tasks	Prioritization Criteria: Technical[a] Issue(s) Priority	Prioritization Criteria: Data Applicability to Issue	Prioritization Criteria: Data Applicability for Establishing Consistent Accident Scenario	Overall Priority of Acquisition Task	Comments
C. Retained fission products in containment basement	a. Sludge samples.	High[b]	Low[b]	High	High-Medium	a. Major final fission product repositories are known to be the RV and the containment basement. Uncertainty in containment inventory is still large.
	b. Basement concrete wall samples.	High[b]	Low[b]	High	High-Medium	b. Major final fission product repositories are known to be the RV and the containment basement. Uncertainty in containment inventory is still large.
D. Retained fission in transport pathway outside the RCS excluding the containment basement	None specified.[e]	High[b]	Low[b]	Medium	Low[d]	a. These examinations and data are primarily for definition of the accident scenario. The existing data require more evaluation to (a) integrate the information into the accident scenario and (b) determine the need for additional samples/data.
E. Fission product chemical form	a. Fission product chemical form from all core material samples	High	Medium	Medium	Medium-High	a. Applicability of data obtained to date to fission product chemical form during the accident needs confirmatory evaluation.
4. Reactor system natural convection	a. Upper plenum temperature distribution	Medium	Medium	Low	Medium-Low	a. Reactor system natural convection heating was low in TMI. The confounding effect of B pump transient will make it difficult to evaluate natural convection cells in the RV.
5. In-vessel coupling of core degradation, thermal-hydraulics, and fission product deposition	Data acquisition tasks 2a, 2b, 2c, 2d, 2h	High	Medium	Medium	Medium-High	a. End-state characterization data will have to be coupled with qualified on-line plant data and reactor systems models to define consistent accident scenarios. Coupled phenomena can only be estimated from code sensitivity calculations.

TABLE 2. (continued)

Primary Data Needs from TMI-2	Sample Data Acquisition Tasks	Prioritization Criteria: Technical[a] Issue(s) Priority	Prioritization Criteria: Data Applicability to Issue	Prioritization Criteria: Data Applicability for Establishing Consistent Accident Scenario	Overall Priority of Acquisition Task	Comments

a. The priority in general applies to the technical issue grouping from Table 9 of the September 1985 draft TMI-2 Accident Evaluation Program document.

b. Fission product retention in containment is a very high-priority severe accident issue, but primarily for accidents where the core has penetrated the RV and there is significant interaction between the concrete and the molten core, with vaporization or aerosol formation directly into the containment atmosphere. The TMI-2 accident did not progress to that stage.

c. This issue is rated as medium priority for all severe accidents except the interfacing systems LOCA or "V" sequence, for which it is rated high.

d. Ranking reflects the knowledge that the highest concentrations of fission products are probably in the core material and the containment basement. Also, much of this portion of the fission product pathway has already been sampled.

e. This portion of the fission product transport pathway has been extensively sampled. Additional samples are not requested until a definite need is established.

the data for establishing a consistent understanding of the accident. The prioritization process produced a list that assigns highest priority to samples and examinations that will provide data that directly characterize core damage progression and fission product release from the fuel. Next in relative importance are data that will characterize retained fission products in the containment basement, fission product chemical form, and structural damage within the lower plenum. The lowest priority data are those related to fission product retention in the primary cooling system and structural peak temperatures. Additional data to characterize the retention of fission products in the containment (excluding the basement) and auxiliary building transport pathways are not required at this time.

The sample acquisition tasks are listed in Table 3. This listing reflects the prioritization established in Table 2 as well as the availability of samples and the sequential need for the data to provide a consistent understanding of the accident. For instance, the core bore and associated video and acoustic information will provide data relevant to core damage progression and fission product retention in the core materials; therefore, these samples are listed before samples of the CSA and lower plenum structures. Also, the CSA and lower plenum structural samples will not be available until the core has been removed from the CSA.

The basic data/measurements listed in Table 2 consist of peak temperatures; physical and chemical state of the core and structural materials; physical and chemical interactions between the fission products, core, and structural materials; the chemical form and concentrations of the retained fission products in the core and RCS; and the fission product transport pathway within the containment and auxiliary building. The measurements are required in sufficient number to map the distribution of the characteristic being measured. The data/measurements needs are reviewed, including prior TMI-2 core examination plan accomplishments, in the following paragraphs. The items are discussed in (a) the order of priority as listed in Table 3 and (b) as it appeared in 1985 when the TMI-2 Accident Evaluation Program document[2] was prepared.

TABLE 3. SUMMARY OF PRIORITIZED SAMPLE ACQUISITION TASKS

1. Central core bore to the lower core support plate and visual examination.

2. Central core bore to the lower head and visual examination.

3. Large volume sample from upper debris.

4. Topography of the crust below the debris bed.

5. Mid-radius core bores to the lower plenum (3 bores).

6. Local large-volume samples of debris from the CSA region.

7. Local large-volume samples of the debris resting in the bottom of the RV.

8. Two intact, part-length fuel assemblies from control rod and poison rod locations.

9. Outer-radius core bore to the lower core support plate.

10. Basement sediment samples.

11. Concrete samples from containment basement walls and floors.

12. RCS surface and sediment samples from A- and B-loop steam generators, pressurizer, hot leg RTD thermowells, and steam generator manway and handhole covers.

13. Samples of the interaction zone between core materials and the lower CSA.

14. Samples of the interaction zone between the instrument guide tube structures and core material.

15. Samples of the interaction zone between the RV lower head surface and the lower core debris materials.

16. Samples of the interaction zone between the core former wall and the core.

17. Fission product retention surfaces in upper plenum.

18. Upper plenum leadscrews.

19. Upper end boxes, control rod spiders, and holddown springs from top of the core.

20. Fuel rod segments from the debris bed.

2.1.1 Core Bore Samples (Table 3, Tasks 1, 2, 5, and 9)

Core material samples are required that will allow multidimensional (axial, radial, azimuthal) interpretation of core damage; i.e., cladding melting, fuel liquefaction and relocation, freezing of the molten core materials, and subsequent remelting and slumping of the core materials. This requirement necessitates a number of continuous axial samples of core materials through the core and lower plenum regions. Thirty core bore samples are identified: ten high-, ten medium-, and ten low-priority samples.

The core bore removal will provide access into the lower core and plenum regions for closed-circuit television (CCTV) video probes. Acquisition of the core bores will provide access for insertion of the CCTV video camera into the center of the core and lower plenum. The CCTV will provide visual examinations of the extent of damage and guidance to possibly modify further core bore locations. The video data must be carefully keyed to RV position, and sufficient data must be taken to provide global views of the extent of damage and closeup views of the damaged core materials.

2.1.2 Core Debris Grab Samples (Table 3, Tasks 3, 6, 7)

Grab samples from the upper core debris have been obtained and analyzed.[5] These small samples have provided significant physiochemical data to evaluate material interactions and fission product behavior. Eleven samples were retrieved, representing only about 0.005% of the estimated debris volume. The samples were generally quite homogeneous, but the relatively small concentration of some fission products has resulted in relatively large uncertainties in the measured concentrations. Additional larger volume samples are required from the upper core debris region to better quantify the retained fission products, particularly tellurium, and their physical and chemical state.

Debris samples (both small, localized samples and larger-volume samples) will also be obtained from the loose core material resting on the RV lower head and possibly from the lower core and/or core support regions (depending on the damage conditions). This material may vary significantly from the upper debris in physical and chemical composition and structure, particle size, and retained fission products. The physical and chemical properties of these materials in the various unique zones will be characterized. Large volume samples are required to increase the detectability of the fission products with low concentrations due to decay since the accident.

2.1.3 Topography of the Crust Below the Debris Bed (Table 3, Task 4)

Visual and ultrasonic topography data will help characterize the frozen crust (previously molten core material) that is postulated to exist under the upper debris bed. Ultrasonic techniques similar to those used for mapping the upper core cavity will be used if practical.

2.1.4 Fuel Rod Segments From Distinct Fuel Assemblies (Table 3, Task 8)

Examination of fuel rod segments from part-length, relatively intact fuel assemblies from the core periphery will provide information on the radial progression of core damage as well as fission product retention over a wide range of fuel rod damage. Assemblies from control and poison rod positions are needed for examination. Intact rod segments will be extracted from the retrieved assemblies for detailed examination. These examinations will provide information on peak fuel rod temperature, materials interactions, retained fission products, and fission product chemical form. The core damage represented by these assemblies is representative of the damage gradient between the molten core and the relatively undamaged core former wall. Also, data on the effect on core damage of silver from control rod assemblies and of alumina from burnable poison rod assemblies will be available.

2.1.5 Retained Fission Products in Containment -Basement Sludge, Concrete Samples (Table 3, Tasks 10, 11)

The primary remaining repositories for fission products at TMI-2 are thought to be the RV (primarily core materials) and the containment basement, particularly the sludge and the concrete walls. Sufficient samples of the basement sludge are needed to estimate the total inventory in the sludge and to characterize the fission products and associated materials. The current radioactivity in the basement and sludge samples suggests significant retention and activity from the basement concrete walls. Independent experiments have confirmed that the concrete is an efficient absorber of cesium. Sufficient samples of the basement walls and floor are necessary to estimate total fission product retention in the basement.

2.1.6 Fission Product Retention in Ex-Vessel Release Pathways (Table 3, Task 12)

All present experience in characterizing the plant indicates that relatively small fission product inventories remain in or on the surfaces of all pathways external to the RV. Additional examinations of samples from readily accessible locations are suggested to confirm these results. These include: (a) manway/handhole covers for both A- and B-loop steam generators and sediment samples (if possible) and (b) resistance temperature detector (RTD) thermowells in the hot leg and sediment from the pressurizer. Examinations of these samples will quantify the retained fission products, fission product chemical form, and the irreversible retention mechanisms, either physical or chemical.

2.1.7 CSA Samples (Table 3, Task 13)

The extent of CSA damage will be determined from visual inspection of the lower plenum and CSA regions through the core bore channels as well as from selected samples of the CSA obtained during defueling. Samples of the CSA are needed to determine peak temperatures and the important

interactions between core materials and stainless steel structures. Sample selection will be based on knowledge gained from the core bores and the follow-up video examination data.

2.1.8 Reactor Vessel Samples (Table 3, Tasks 14, 15)

The current understanding of the interactions between molten core materials and the RV suggests that the mode of vessel failure would be melting of the instrument penetration nozzles. Samples of the instrument penetration nozzles are required to determine the extent of damage to these structures and to estimate the margin to failure of the vessel. Samples from the instrumentation penetration nozzles at the vessel center and mid-radius locations should be sufficient.

The condition of the RV is not known, and the understanding of thermal-hydraulic/mechanical details of the core melt progression and ultimate attack on the vessel walls is not complete. These data requirements will be further substantiated as defueling progresses and examination data become available, i.e., data from the core bores and lower plenum volume samples. Visual examination of the vessel wall after defueling is desirable to obtain samples of the RV wall at locations other than the instrument penetrations. These data needs will be further refined from the vessel failure models as these models are developed.

2.1.9 Core Former Wall (Table 3, Task 16)

The core former wall appears to be basically intact in the upper regions of the core. However, the extent of damage is not known below the core mid-plane. If severe damage to the core former walls becomes evident during core defueling, detailed video and acoustic mapping of the damage zones will be necessary; and samples of the walls will be needed to determine the mode of damage and the material interactions. Sample locations will be specified when the severe damage is evident.

2.1.10 Upper Plenum Surface Temperatures and Deposition (Table 3, Tasks 17, 18)

Upper plenum surface temperatures are necessary to assess the relative importance and effect of natural convection and multidimensional flow patterns within the RV on core heatup and fission product transport/retention within the RCS. Previous examinations of two control rod leadscrews indicate axial temperature differences of approximately 500 K (top to bottom) and radial temperature differences (i.e., core center to periphery) of approximately 250 K. These data, in conjunction with the damage profile of the upper core support plate and structure of the debris bed, are probably sufficient to address the technical issues associated with RV natural circulation. However, additional samples of structural surfaces are needed to complete characterization of the retained fission products. The upper plenum is probably not a significant repository for fission products, so these samples and examinations are judged to be of lower priority.

In May 1987, the TMI-2 AEP staff developed a TMI-2 sample examination priority list (Table 4) based on the findings of the TMI-2 defueling and sample examination activities conducted since publication of Reference 2 (February 1986). The purpose of the list was for planning the remainder of the TMI-2 AEP SA&E to maximize the TMI-2 accident information that would be obtained with the remaining funds.

2.2 Development of the SA&E Plan

Table 5 is a summary of the in situ measurements and sample acquisitions and examinations that satisfy the technical information needs identified in the TMI-2 Accident Evaluation Program document[2] and listed in Table 2. Table 5 includes prior year sample acquisitions and examinations and in situ measurements for completeness. The SA&E Plan includes:

TABLE 4. TMI-2 SAMPLE EXAMINATION PRIORITY LIST AS OF MAY 1987

A. High Priority:

1. Fuel assembly samples from previously molten material escape path
2. Non-fuel material resting on RV lower head
3. Interaction zone between molten core materials and baffle plates
4. Core support assembly
5. Reactor vessel lower head[a]
6. Leadscrews from highly damaged regions in the upper plenum.

B. Medium Priority:

1. Metallographic/radiochemistry examination of horseshoe ring samples (Canister D-174)
2. Laser mass spectrometer[b] for fission product chemistry analysis: instrument development and sample analysis
3. Microscanner analysis (fission product distribution) of core material samples
4. Bulk oxidation state analysis of core material samples
5. Core sample Kr-85 analysis
6. NDE/metallographic/radchem examination of B-loop RTD thermowell
7. Metallographic/radchem examination of upper end boxes and spiders
8. Visual documentation of defueling.

C. Low Priority:

1. NDE/metallographic/radchem examination of in-core instrument strings
2. Tritium analysis
3. Radchem examination of RB sludge batch samples.

---

a. This would probably require special acquisition task. Equipment may exist which is capable of obtaining the required samples.

b. Development of this method would be accomplished first. If the equipment could measure fission product chemical form, the analysis would become a high-priority item because it would be the only device available to measure chemical form.

TABLE 5. TMI-2 ACCIDENT EVALUATION IN SITU MEASUREMENTS AND SAMPLE ACQUISITIONS AND EXAMINATIONS

Measurement/Examination Activity	Quantity: Completed Sample Acquisitions	Quantity: Completed Exams	Quantity: Future Additional Samples	Quantity: Proposed Future Exams	Priority[a]	Examiner[b]	Justification/Information
RV visual examination:							Explain accident scenario and support sample selection.
CCTV surveys	NA	5 areas[c]	NA	1 area	1	REP/AEP	Determine current conditions of molten core material escape route.
Sonar topography survey	NA	1 area	NA	0	4	REP/AEP	
Core bore samples of fused/joined core material:							Determine condition and quantity of fused/joined core material under loose debris and between core and RV head.
Under loose debris	13 of 14 successful	13 partial	0	0	1,5,9	AEP-INEL NRC, ANLE CSNI	Determine retained fission product concentration and chemical form.
Subcore	3 unsuccessful	0	0	0	--		
Core distinct components:							
Upper core region:							
6-in. fuel rod segments from core cavity periphery	6	6 (NDE only)	0	0	20	AEP-INEL, CSNI	
Small grab samples from upper core debris	11	11	0	0	--	AEP-INEL	
Large grab samples from upper core debris	6	6	0	0	3	INEL	
Fuel assembly upper section:							
Fuel rod segments from core cavity periphery fuel assembly remnants	18	4	0	0	8	AEP-INEL, NRC-ANLE, CSNI	
Guide tube/BPR segments	0	0	NA	0	0	--	
Guide tube/ control rod segments	7	2	0	0	8	AEP-INEL, CSNI	
Instr. tube/ instr. string segments	1	0	0	0	19	INEL	
Instr. tube segments	0	0	0	0	19	--	
Spacer grids	0	0	0	0	19	--	
Upper end boxes	12	0	0	0	19	-	
Holddown springs	12	0	0	0	19	--	

TABLE 5. (continued)

Measurement/Examination Activity	Quantity: Completed Sample Acquisitions	Quantity: Completed Exams	Quantity: Future Additional Samples	Quantity: Proposed Future Exams	Priority[a]	Examiner[b]	Justification/Information
Burnable poison rod spiders	1	0	0	0	19	-	
Control rod spiders	7	0	0	0	19	-	
APSR spider surface deposit	0	0	0	0	19	--	
Lower core region:							Additional samples may be needed to characterize molten core material escape paths.
Fuel rod segments	69[b]	3(partial)	0	14[d]	100	AEP-INEL, NRC-ANLE, CSNI	
Guide tube/BPR segments	15[b]	1(partial)	0	8[d]	100	AEP-INEL, NRC-ANLE	
Guide tube/ control rod segments	7[b]	4(partial)	0	7[d]	100	AEP-INEL, NRC-ANLE	
Instrument tube/ instr. string segments	0	1(partial)	0	0	19	--	
Instrument tube segments	8[b]	0	0	1[b]	19	-	
Spacer grids	0	0	0	0	19	--	
Lower end boxes	1[b]	0	0	0	19	--	
Lower vessel debris:							
Core material samples from lower head region:							
Small	11	8	0	3	7	REP-INEL, NRC-ANLE, CSNI	
Large	0	0	2	2	7	REP-INEL, NRC-ANLE	
RV lower region gamma scans through instrument strings	1	1	0	0	-	REP-GPU	GPU TB 85-14.
Samples of loose debris in lower core support structure region	0	0	0	0	6	AEP-INEL	Character of loose debris in lower core support structure region.

TABLE 5. (continued)

Measurement/Examination Activity	Quantity: Completed Sample Acquisitions	Quantity: Completed Exams	Quantity: Future Additional Samples	Quantity: Proposed Future Exams	Priority[a]	Examiner[b]	Justification/Information
RV internals examinations:							
Control rod leadscrews	3	2	0	0	18	AEP-INEL AEP-B&W	Fission product transport path, temperature gradient, and RV natural recirculation routes.
Core former wall samples	0	0	0	0	16		Data for isotherm maps and materials interactions at core periphery.
Leadscrew support tube lower section	1	1	0	0	Low	AEP-BCL	Characterization of surface deposits in RV dome region.
Core lower support structure plate samples	0	0	0	0	13	--	Data for isotherm maps and materials interactions along core material relocation path. Fission product inventory and materials interactions.
RV lower head samples	0	0	0	0	15	--	Data for isotherm maps and materials interactions
Lower plenum horizontal surface deposits	0	0	0	0	17	--	Fission product inventory data.
Lower plenum instrument structures	0	0	0	0	14	--	Materials interactions.
RCS characterization:							
RCS gamma scans:							Capability to convert data to radionuclide and uranium abundance and location uncertain.
A-loop steam generator (external)	N/A	7	N/A	0	Low	GPU/AEP	
Pressurizer (external)	N/A	6	N/A	0	Low	GPU/AEP	
Core flood tank B	N/A	9	N/A	0	Low	GPU/AEP	
Steam generator inside	N/A	0	N/A	TBD	Low	GPU/AEP	
Pressurizer inside	N/A	0	N/A	TBD	Low	GPU/AEP	
Pressurizer surge line	N/A	0	N/A	TBD	Low	GPU/AEP	
Decay heat removal line	N/A	0	N/A	TBD	Low	GPU/AEP	
Pump volutes	N/A	0	N/A	TBD	Low	GPU/AEP	
Hot legs	N/A	0	N/A	TBD	Low	GPU/AEP	

TABLE 5. (continued)

Measurement/Examination Activity	Quantity: Completed Sample Acquisitions	Quantity: Completed Exams	Quantity: Future Additional Samples	Quantity: Proposed Future Exams	Priority[a]	Examiner[b]	Justification/Information
RCS adherent surface deposits:							Adherent fission product deposits.
A-loop RTD thermowell	1	1	0	0	12	INEL	
B-loop RTD thermowell	0	0	0	0	12	--	
A-loop steam generator manway cover backing plate	1	1	0	0	12	AEP-BCL	
B-loop steam generator manway cover backing plate	1	1	0	0	12	AEP-BCL	
Pressurizer manway cover backing plate	1	1	0	0	12	AEP-BCL	
A-loop steam generator handhole cover liner	1	1	0	0	12	INEL	
RCS sediment:							
Steam generator tube sheet top loose debris	2	2 (partial)	0	0	12	REP-GPU AEP-PL REP-INEL AEP-INEL	Character of sediment in both steam generator upper heads.
Steam generator lower head loose debris	0	0	2	0	12	AEP-PL	GPU Nuclear project. Character of sediment in both steam generator lower heads.
Pressurizer sediment	1	1	0	0	12	REP-W	Character of sediment in pressurizer lower head.
Ex-RCS characterization:							
Reactor building:							
Liquid:							Basement liquid has been drained and decontaminated.
Basement 305 ft el.	110 mL	1	0	0	Low	AEP-INEL	
Basement 325 ft el.	120 mL	1	0	0	Low	AEP-INEL	
Bottom open stairwell	45 mL	1	0	0	Low	AEP-INEL/ HEDL	
Basement sump pit	200 mL	1	0	0	Low	AEP-INEL/ HEDL	
RCDT	120 mL	1	0	0	Low	AEP-INEL/ HEDL	

TABLE 5. (continued)

Measurement/Examination Activity	Quantity: Completed Sample Acquisitions	Quantity: Completed Exams	Quantity: Future Additional Samples	Quantity: Proposed Future Exams	Priority[a]	Examiner[b]	Justification/Information
Sediment:							Sediment includes Susquehanna River silt as well as core fission products and materials.
Basement 305 ft el.	108 g	1	0	0	10	AEP-INEL	
Basement 325 ft el.	25 g	1	0	0	10	AEP-INEL	
Bottom open stairwell	1 g	1	0	0	10	AEP-INEL/ HEDL	
Basement sump pit	72 g	1	0	0	10	AEP-INEL/ HEDL	
RCDT	0.5 mg	1	0	0	10	AEP-INEL/ HEDL	
Basement floor (282 ft el.):							
RCDT discharge area	0	0	0	0	10	AEP-PL	
Leakage cooler room, RCDT room, inside D-ring	0	0	0	0	10	AEP-PL	
Outside D-ring areas	3	2	0	0	10	AEP-SAI	
Core instrument cable chase	0	0	0	0	10	AEP-PL	
Sludge removal storage tank	0	0	0	0	10	AEP-PL	
Concrete bores:							
Floors: 347 ft el.	8	8	0	0	Low	GPU-AEP	
305 ft el.	6	6	0	0	11	GPU-AEP	
282 ft el.	2	0	0	0	11	REP-GPU AEP-INEL	GPU has samples.
D-ring walls: 347 ft el.	1	1	0	0	Low	GPU/AEP	
305 ft el.	2	2	0	0	11	GPU/AEP	
flooded region		4	1	0	11	REP/GPU, REP/INEL, AEP/INEL	
3000-psi (shield) wall (flooded region)	7	1	0	0	11	REP/GPU REP/INEL, AEP/INEL	
Block (elevator/ stairwell) walls (flooded region)	6	1	0	0	11	REP/GPU REP/INEL AEP/INEL	
Adherent surface deposits:							
Air cooler panels	5	5	0	0	Low	AEP/INEL	
Basement outer wall steel liner	0	0	0	0	Low	--	

TABLE 5. (continued)

Measurement/Examination Activity	Quantity: Completed Sample Acquisitions	Quantity: Completed Exams	Quantity: Future Additional Samples	Quantity: Proposed Future Exams	Priority[a]	Examiner[b]	Justification/Information
Auxiliary and fuel handling buildings:							All equipment in the auxiliary and fuel handling buildings has been fully or partially decontaminated by flushing, filter removal, water treatment, and resin removal or treatment.
Liquid:							
Reac. cool. bleed Tank A	125 mL	1	0	0	Low	AEP-INEL	
Reac. cool. bleed Tank B	150 mL	1	0	0	Low	AEP-INEL	
Reac. cool. bleed Tank C	150 mL	1	0	0	Low	AEP-INEL	
Makeup and purification demineralizer B	40 mL	1	0	0	Low	AEP-ORNL	
Sediment:							
Reac. cool. bleed Tank A	60 g	1	0	0	Low	AEP-INEL/HEDL	
Makeup and purification demineralizer A (resin)	10 g	1	0	0	Low	AEP-ORNL	
Makeup and purification demineralizer B (resin)	40 mL	1	0	0	Low	AEP-ORNL	
Filter housing contents (filter paper, liquid, and collected solids):							
Makeup and purification system							
Demineralizer prefilters	both	both	0	0	Low	AEP-INEL/LANL, NRC-AMLE	
Demineralizer after filters	both	both	0	0	Low	AEP-INEL/LANL, NRC-AMLE	
RC pump seal water injection system filters	both	both	0	0	Low	AEP-INEL/LANL, NRC-AMLE	

TABLE 5. (continued)

Measurement/Examination Activity	Quantity: Completed Sample Acquisitions	Quantity: Completed Exams	Quantity: Future Additional Samples	Quantity: Proposed Future Exams	Priority[a]	Examiner[b]	Justification/Information

a. Priority values 1 through 20 are listed in Table 3.

b. Examination responsibility is shown with the funding organization (AEP, REP, NRC, and/or GPU) shown first (xxx/xxx indicates joint funding and/or performance responsibility), and the sample examination location shown second. Names of funding organizations are abbreviated as follows: Accident Evaluation Program, AEP; Reactor Evaluation Program, REP; Nuclear Regulatory Commission, NRC; GPU Nuclear, GPU. Names of examination locations are abbreviated as follows: Idaho National Engineering Laboratory, INEL; Argonne National Laboratory-East, ANLE; Battelle Columbus Laboratoryes, BCL; Westinghouse Electric Corporation, W; Science Applications International Corporation, SAI; Hanford Engineering Development Laboratory, HEDL; Oak Ridge National Laboratory, ORNL; Los Alamos National Laboratory, LANL; CSNI, Committee for the Safety of Nuclear Installations of the Organization for Economic Cooperation and Development (OECD). PL indicates that an outside private laboratory is expected to perform the examination.

c. Completed RV CCTV surveys include the following areas: all sides of the upper core region cavity, core cavity region loose debris after dislodging core components from plenum assembly, plenum assembly, accessible areas of the downcomer and RV bottom head periphery regions, core lower region, and lower CSA.

d. Core bore collected samples.

1. Acquisition of all samples, distinct components, and in situ measurements listed in the Future Additional Samples column.

2. Sample examination and in situ measurement analysis of those items listed in the Proposed Future Exams column. Only the high-priority tasks can be accomplished within the allocated resources. Selection was made using the examination priority list shown in Table 3.

The plans for sample acquisition and in situ measurements were developed based on the policy of retrieving samples and making in situ measurements in conjunction with the General Public Utilities (GPU) Nuclear decontamination and defueling program for the TMI-2 facility. Some decontamination and defueling program plans are currently uncertain, primarily because of technical uncertainties. The technical uncertainties include (a) the methods and procedures for removal of the fused core and structural materials from the compartment between the baffle plates and core barrel and the RV lower plenum regions and (b) TMI plant regions that may be selected for interim monitored storage classification, leaving the area unsuitable for personnel entry and sample acquisition. The GPU Nuclear TMI-2 decontamination and defueling program includes the following:

- An auxiliary and fuel handling building decontamination program.
- A reactor building decontamination program.
- A reactor building basement contamination characterization program[a]

---

a. Letter, K. J. Hoffstetter to D. M. Lake, 4240-85-0227, "Reactor Building Sludge and Core Bore Samples," June 6, 1985.

- An RCS fuel locating program[a]

- An RV data acquisition program[b]

- The defueling program[c]

An important part of the DOE TMI-2 Program is the Reactor Evaluation Program (REP), which supports the TMI-2 defueling program in the following areas:

- Funding for special defueling tools and plant decontamination studies.

- Defueling operations, which will include both sample retrieval from the RV and collection of in situ measurement data, such as CCTV surveys and ultrasonic scanner topography.

The responsibility for funding the tasks outlined in Table 5 is indicated in the table and includes GPU Nuclear, the DOE AEP, the DOE Reactor Evaluation Program (REP), and the OECD. Examinations will be performed at the INEL, Argonne National Laboratory-East (ANL-E), other DOE laboratories, private laboratories (PL), or OECD/CSNI member country laboratories. Work plans were developed for the tasks summarized in Table 5 under the assumption that after the samples have been retrieved at TMI-2, the handling, packaging, and shipping activities to the INEL will be funded by the REP-supported defueling program.

---

a. Letter, J. D. DeVine to R. L. Freemerman, 4500-84-0738, "Ex-vessel Fuel Locating Samples Packages," August 27, 1984.

b. GPU Nuclear document TPO/TMI-117, In-Vessel Data Acquisition, September 1984.

c. GPU Nuclear news release 38-85N, TMI-2 Defueling Schedule Updated, April 30, 1985.

The development of the TMI-2 AEP SA&E Plan included consideration of the following assumptions:

- The total budget allowance, including prior years, would be $20.6M from the DOE and $600K from and administered by the NRC.

- Sample retrieval and in situ measurements would be accomplished in conjunction with GPU Nuclear's TMI-2 recovery program and with support from the DOE TMI-2 REP in the development of special defueling tools and the collection of defueling-operation-related samples and in situ measurements.

- Prioritization of the information needs from the sample acquisition and examination tasks was shown in Table 3. This prioritization was based on technical needs identified and discussed in the TMI-2 Accident Evaluation Program document.[2] These are shown in Table 2.

- The portions of the total budget to be allocated to laboratory examination of samples was: $918K to other DOE laboratories, $1.38M to private domestic laboratories, and 2.9M to EG&G laboratories. In addition, NRC would fund about $600K for other DOE laboratory examinations.

The sample examination program that is proposed for FY 1988 will complete the TMI-2 AEP sample examination program sponsored by DOE. The plan includes the following activities:

- Completion of the radiochemical (including microgamma scanning) and elemental analysis of the core bore samples.

- Completion of the elemental analysis of the samples of loose debris from the top of the tube sheet in the B-loop steam generator.

- Elemental and radiochemical assay of two particles of loose debris from the top of the tube sheet in the A-loop steam generator.

- Completion of radiochemical and elemental analysis of six large-volume core debris grab samples from the upper core region.

- Metallographic, radiochemical and elemental analysis characterization of nine new samples of loose debris from near the RV lower head.

- Completion of the evaluation of the ORIGEN2 code accuracy in predicting the production of fission products.

- Measurement of the oxidation state of eight samples of core material from the core bores and loose debris from the RV lower plenum with the potentiometer-titration method developed in FY-1987.

- Measurement of the gamma-emitting radionuclide distribution on six additional core material samples from the core bores and the loose debris from the RV plenum with the microgamma scanner instrument fabricated and developed in FY-1987.

9. Determination of the feasibility of measuring the chemical form of fission products using a laser probe with time-of-flight mass spectrometry instrument.

- Packaging and storage of the TMI-AEP TMI-2 accident sample inventory at the INEL in either quick-access storage facilities or more inconvenient but retrievable storage in the TAN Hot Shop Pool in TMI-2 fuel canisters.

The proposed TMI-2 AEP SA&E Work Plan was divided into the following four work package categories:

1. Reactor vessel, which includes the RV, its internal structures, and the core.

2. RCS fission product inventory, which includes the core materials and fission products now residing in the ex-vessel portion of the RCS, including the core flood tanks.

3. Ex-RCS fission product inventory, which includes the core materials and fission products now residing in areas, buildings, and equipment external to the RCS.

4. Program management support, which includes personnel and services to plan, direct, and control the SA&E program.

The three SA&E implementation work package categories (1, 2, and 3 above) were further subdivided into sample acquisition and sample examination work packages because of the geographical separation of the respective support personnel and operations. The individual work packages provide the detailed scope of work, assumptions, products/deliverables, milestones, prerequisites statements, logic diagrams (activity lists and schedules), and resource (labor and material) tabulations. The subdivision of the TMI-2 AEP SA&E Plan into the three TMI-2 nuclear power plant regions--RV, RCS, and external to the RCS (Ex-RCS)--was selected to coincide with the GPU Nuclear TMI-2 fuel location and characterization program.

Detailed discussions of the SA&E work plans are contained in the next four sections of this report.

3. REACTOR VESSEL SAMPLE ACQUISITION AND EVALUATION WORK PLAN

3.1 Introduction

The reactor vessel SA&E work plan includes the RV; the nuclear reactor core and its support structures; the core instrument strings, including their support and ex-vessel conduit structures; and other RV internals. A diagram of the RV arrangement as it appeared before the commencement of core damage events is shown in Figure 1. A typical in-core instrument assembly, including the ex-vessel conduit arrangement, is shown in Figure 2. The TMI-2 CSA arrangement is shown in Figure 3.

The RV SA&E work plan was developed by considering the types of data needed to help resolve the major issues discussed in Section 2. Some of the information pertinent to developing the data acquisition plan is discussed in the following paragraphs. This information includes applicable details of the TMI-2 preaccident operations, including core loading details; the accident sequence, including available information on the current damage state within the RV; and the postaccident RV internals disassembly activities that have caused further relocation and separation of the RV internals.

3.1.1 Preaccident Operations

At accident initiation, the TMI-2 core was in the initial fuel cycle at 97% of full power with 3175 MWD/MTU average core burnup. The core loading consisted of 177 fuel assemblies and 139 rod assemblies arranged in the core positions, as shown in Figure 4. The fuel assemblies were placed in the core positions with the identification marking toward the south (see Figure 5). The core position component identification marking index is provided in Appendix C.

Each of the fuel assemblies (see Figure 5) is a 15 x 15 array of 208 fuel rods, 16 zircaloy guide tubes, and one center-position zircaloy instrument tube connected to and supported by eight Inconel spacer grids

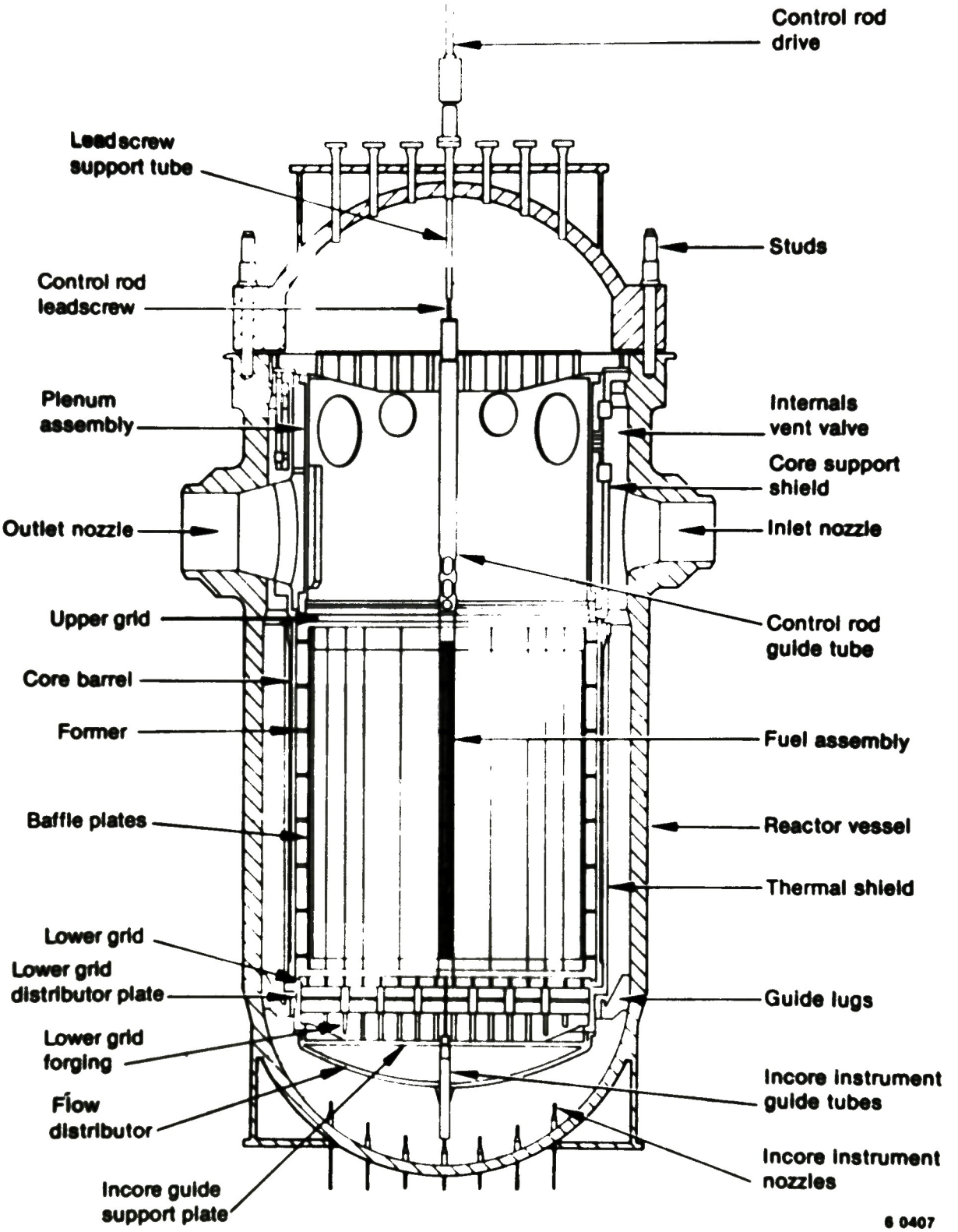

Figure 1. General arrangement of TMI-2 reactor vessel and internals.

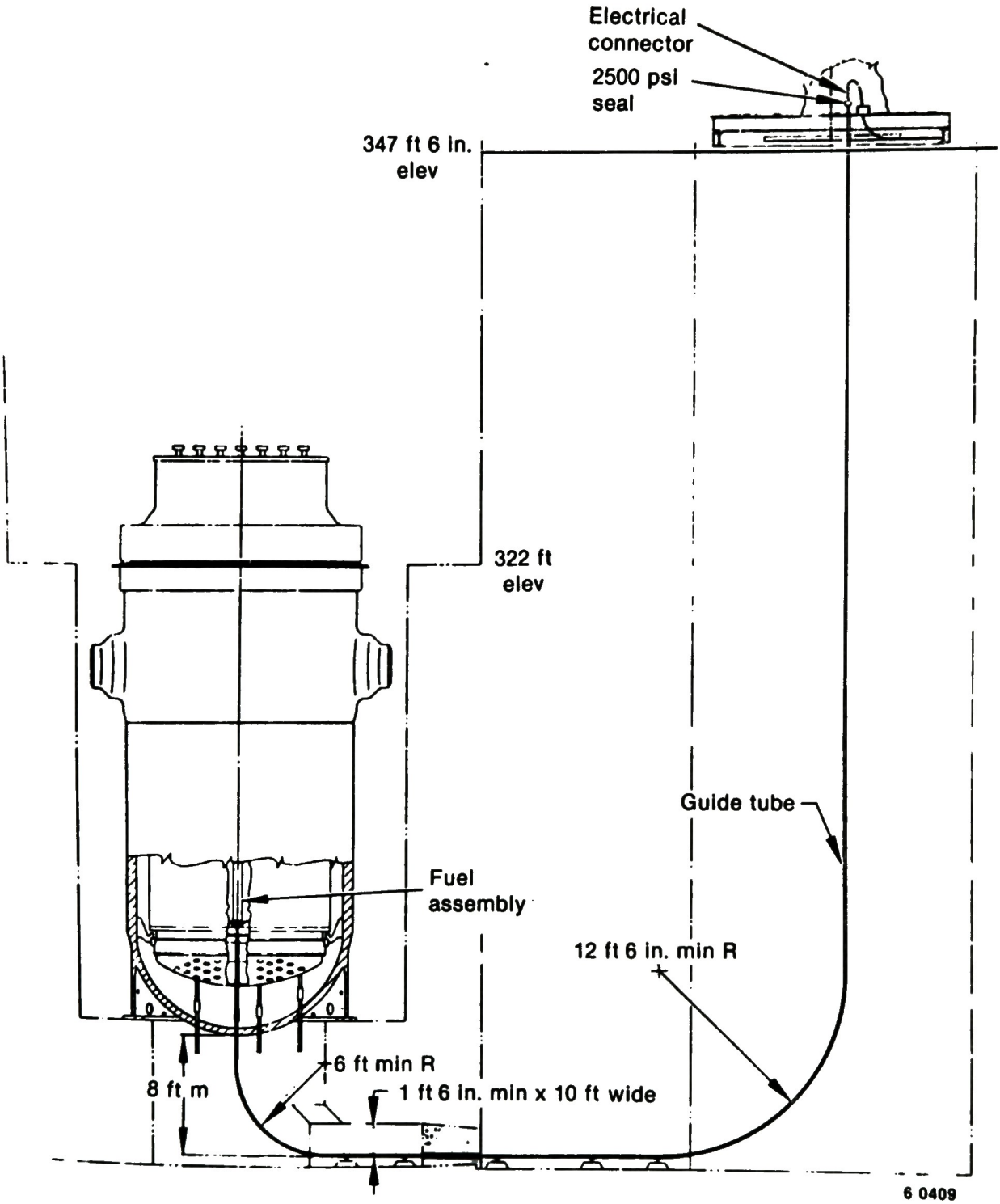

Figure 2. Schematic of typical in-core instrument assembly.

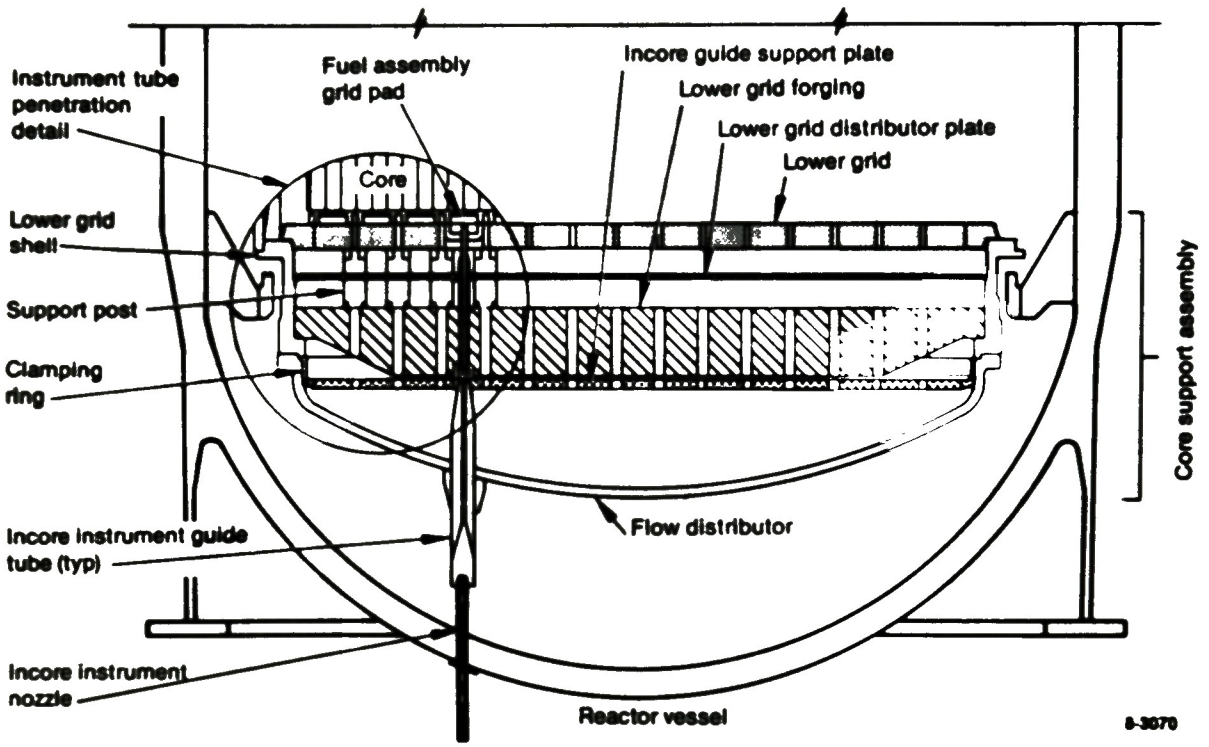

Figure 3. TMI-2 core support assembly configuration.

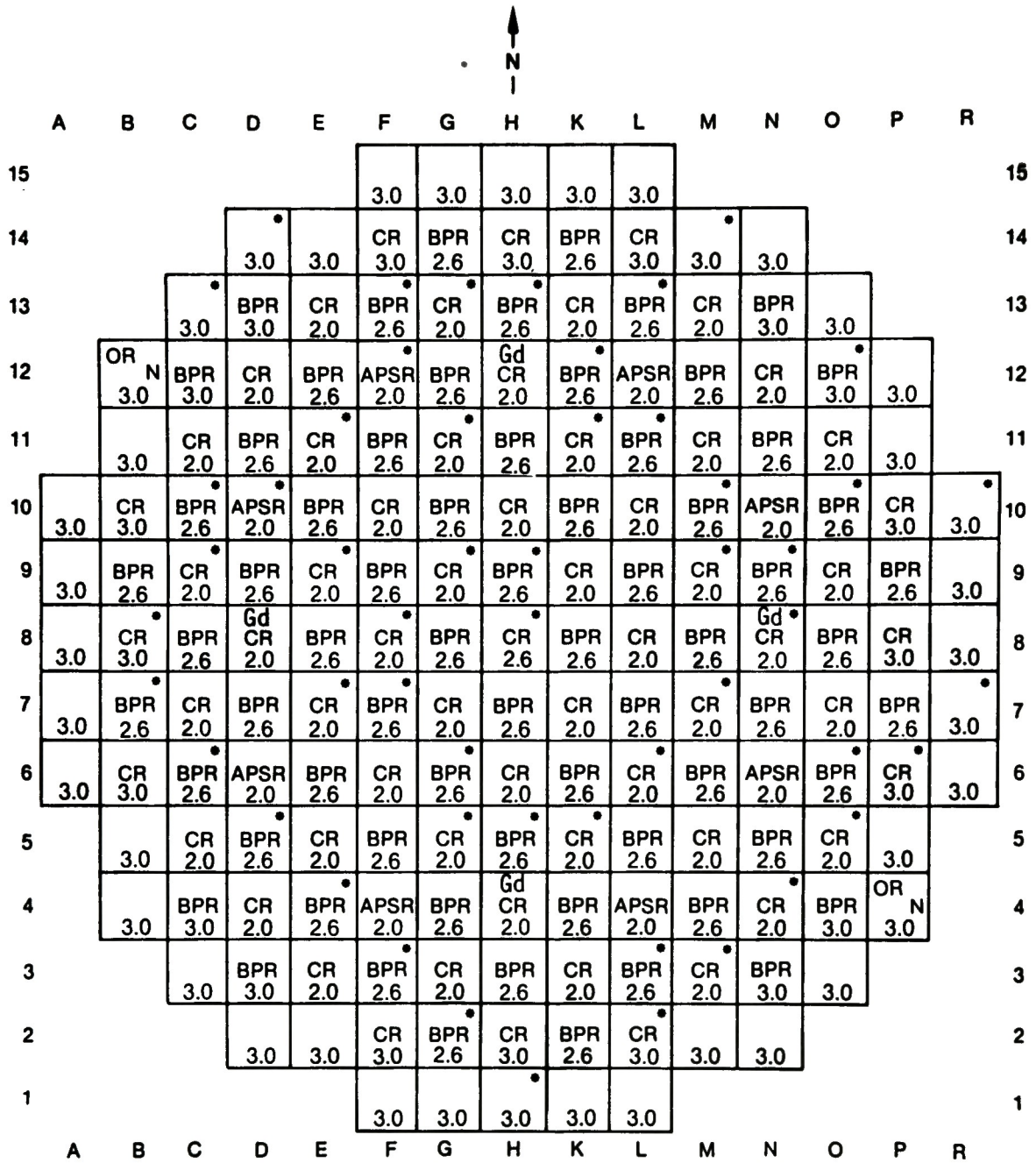

Figure 4. TMI-2 core loading diagram.

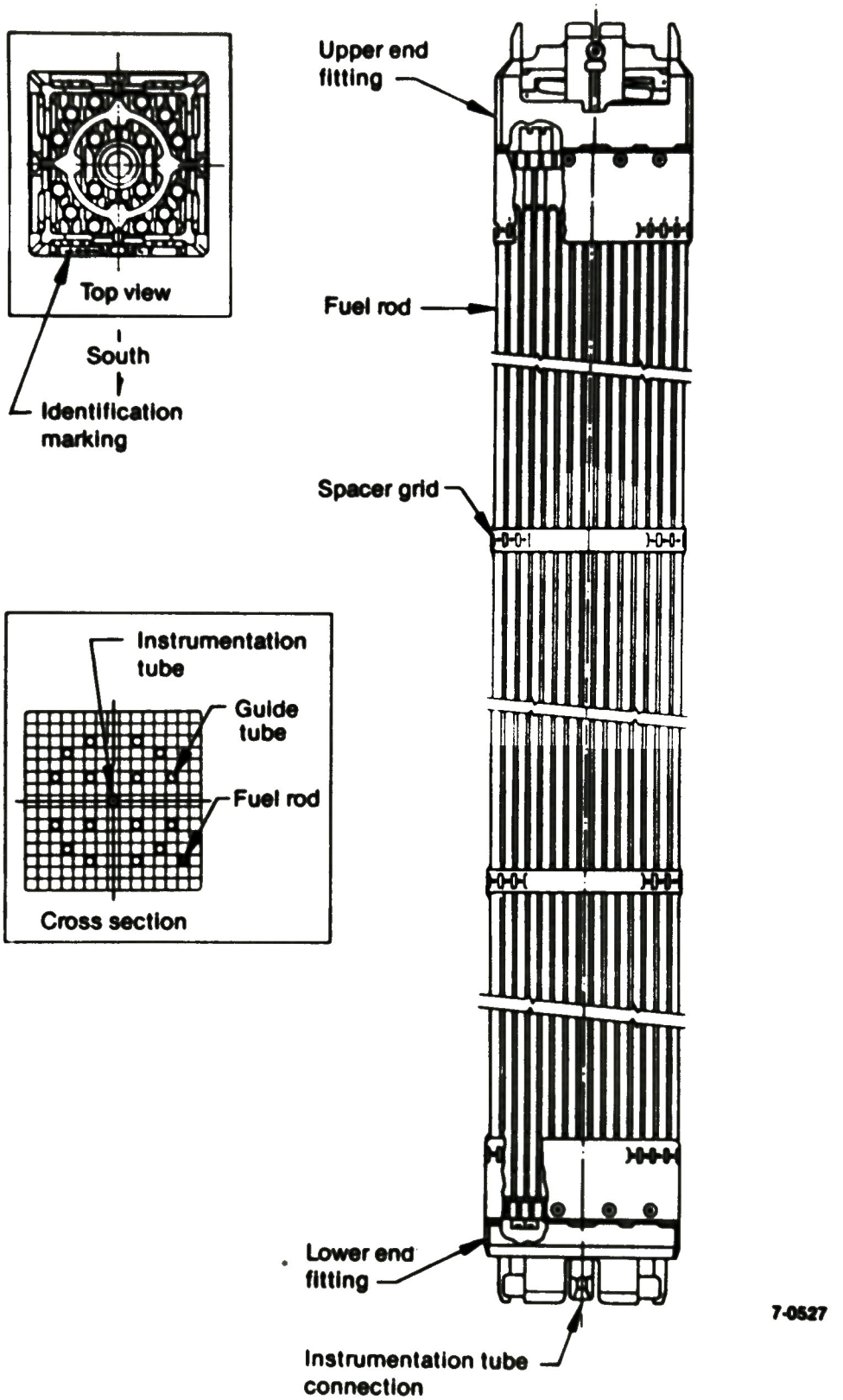

Figure 5. Side, top, and cross-sectional views of TMI-2 fuel assembly.

and 304L stainless steel upper and lower end fittings. An Inconel, coil-type holddown spring is located in the upper end fitting.

All interior and two of 40 peripheral core positions also have rod assemblies consisting of 16 rods connected together at the top by arms extending from a central hub. The rods fit into the fuel assembly guide tubes. The two peripheral fuel assemblies (core positions B12 and P4, next to the core former wall) contain a stationary orifice-rod assembly (see Figure 6), with 12-in.-long stainless steel rods extending into the guide tubes to restrict coolant flow, of which one in each assembly is assumed to be modified to include a neutron source rod. Interior fuel assemblies contain one of three types of rod assemblies, as follows:

- Burnable poison rod (BPR) assembly (see Figure 7)--The stationary BPR assemblies are located in 68 core positions, as shown (BPRs) in Figure 4. Each BPR rod contains a 126-in.-long stack of Al_2O_3 (0.95)-B_4C (0.01) ceramic pellets clad in zircaloy, except for core position N13, which is assumed to contain eight rods with borated graphite instead of Al_2O_3-B_4C.

- Control rod (CR) assembly (Figure 8)--The CR assemblies are located in the 61 core positions shown in Figure 4. The rods contain 134-in. lengths of Ag-In-Cd clad in Type 304L stainless steel. The CR assemblies were fully inserted during the accident sequence.

- Axial-power-shaping-rod (APSR) Assembly (Figure 9)--The APSR assemblies are located in the eight symmetrical core positions shown on Figure 4. Each rod contains a 36-in. length of Ag-In-Cd material clad in stainless steel. The APSR assemblies remained withdrawn at 37 in. during the accident sequence.

Table 6 is a summary list of the original materials and metallic element inventory in the 126,560 kg (279,013 lb) of material within the core boundaries.

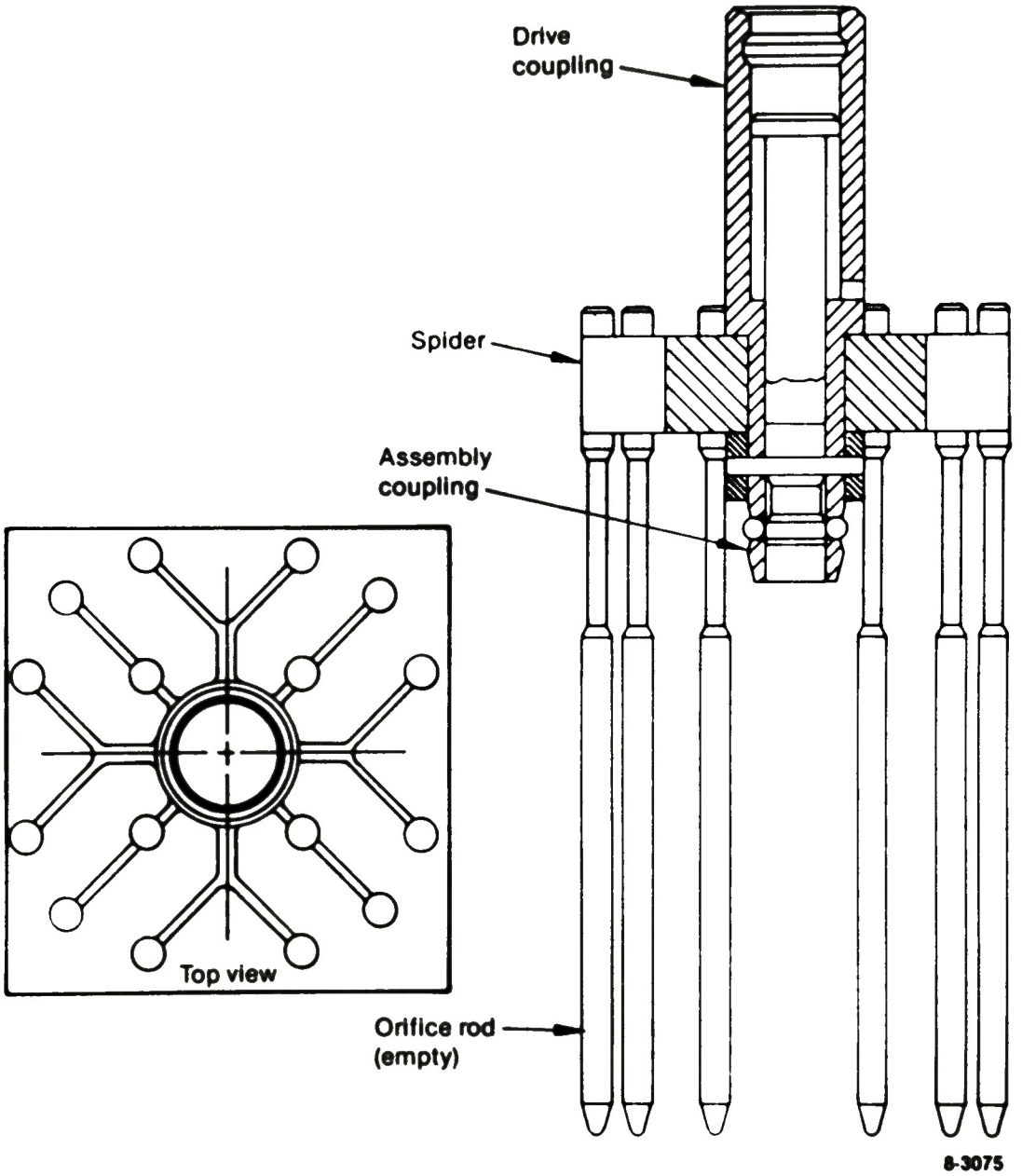

Figure 6. Orifice rod assembly.

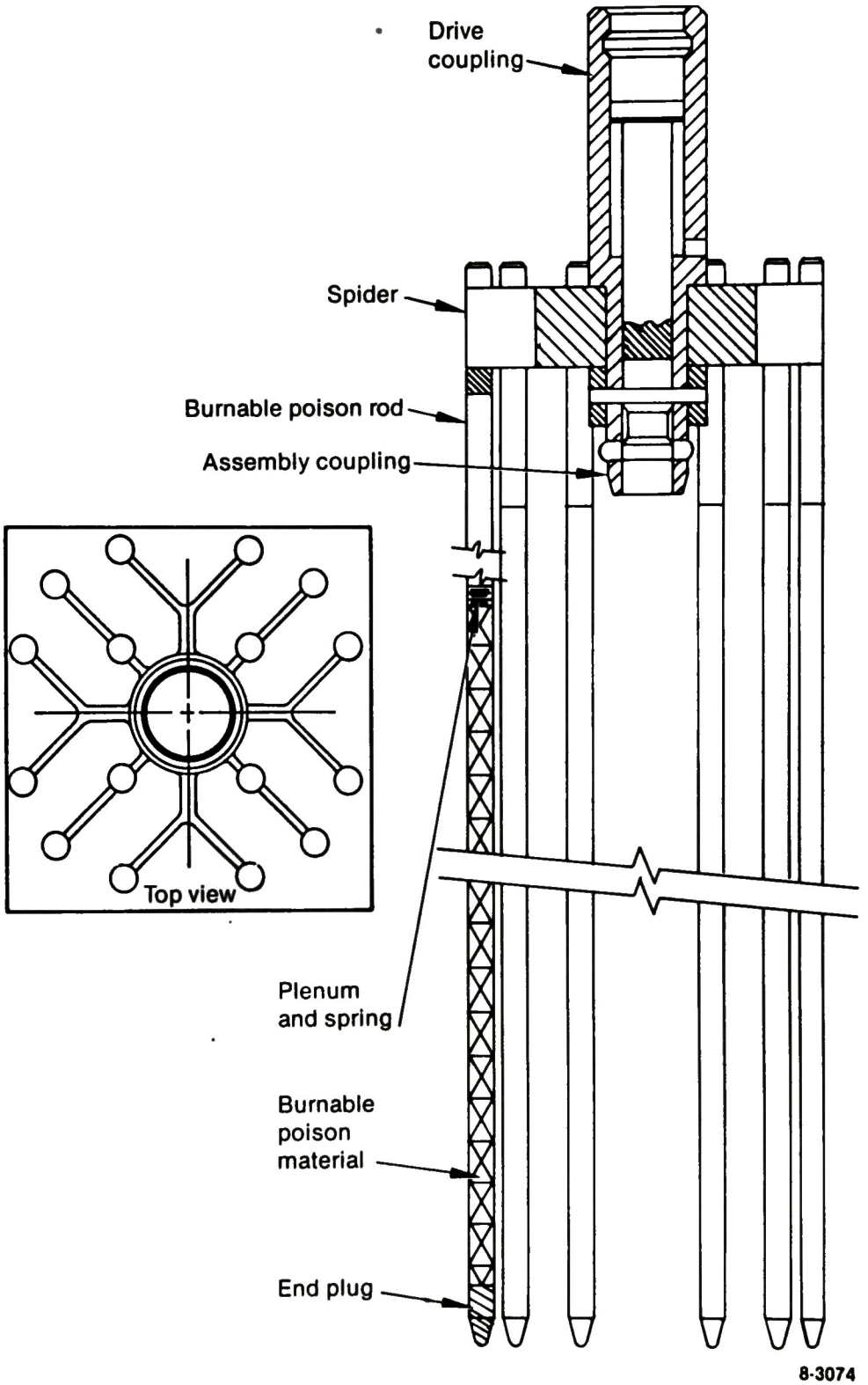

Figure 7. Burnable poison rod assembly.

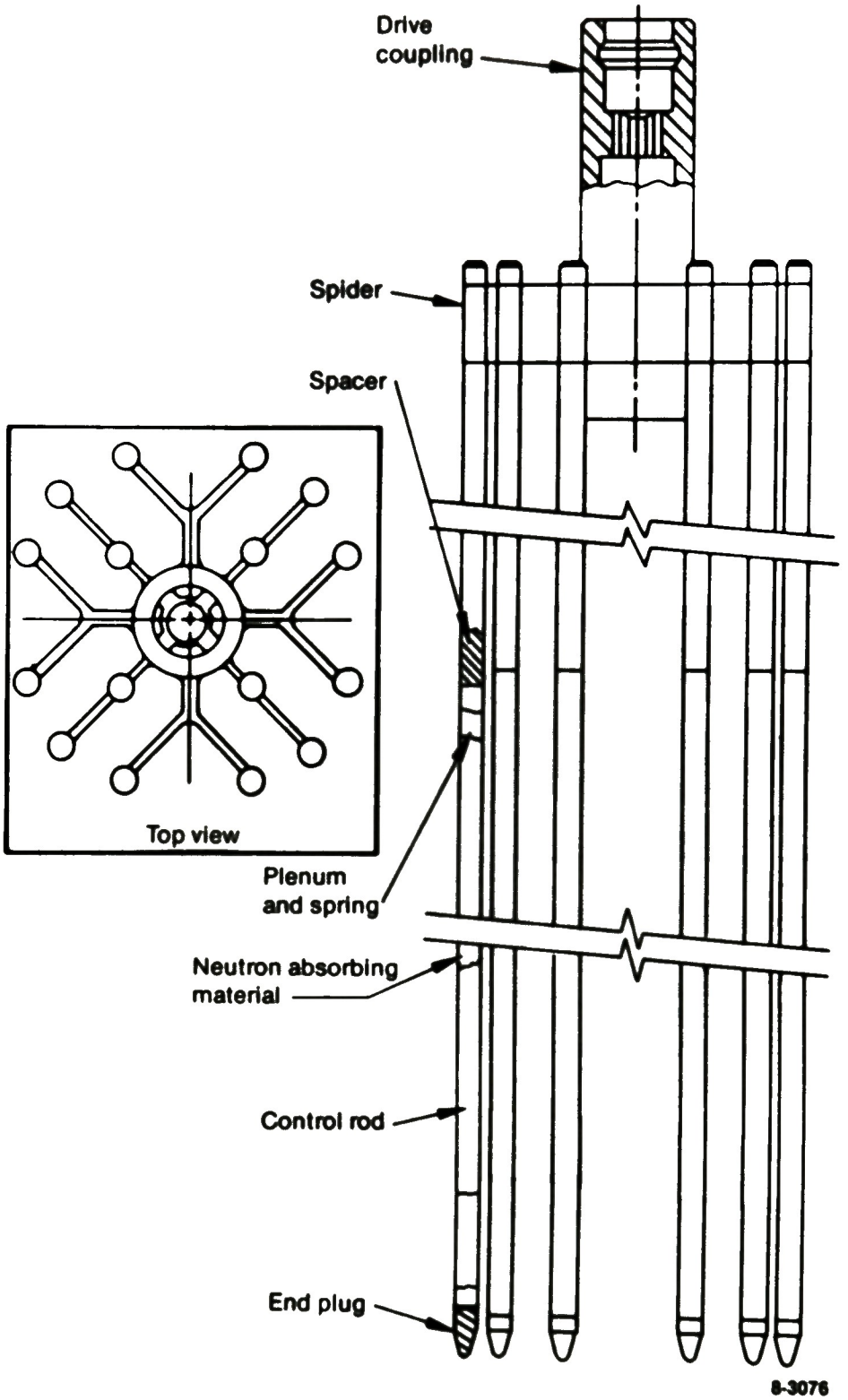

Figure 8. Control rod assembly.

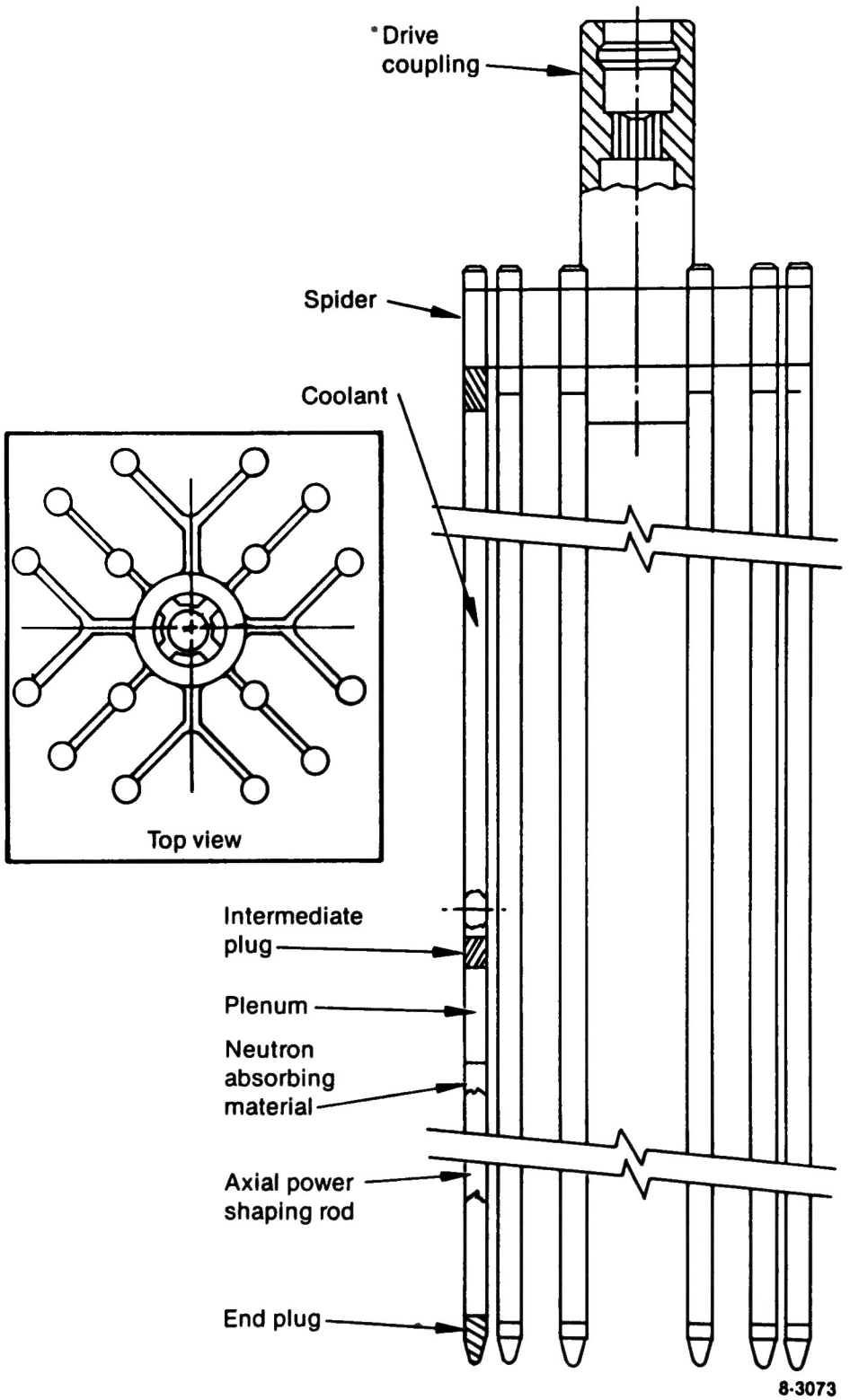

Figure 9. Axial-power-shaping-rod (APSR) assembly.

TABLE 6. TMI-2 REACTOR CORE COMPOSITION

Material (Weight)	Element	Weight Percent	Material (Weight)	Element	Weight Percent
UO_2	U-235[a]	2.265	Inconel-718	Ni[a]	51.900
(94,029 kg)[a]	U-238[a]	85.882	(1,211 kg)	Cr[a]	19.000
(531.9 kg)[b]	O	11.853	(6.8 kg)[b]	Fe[a]	18.000
				Nb[a]	5.553
Zircaloy-4	Zr[a]	97.907		Mo[a]	3.000
(23,177 kg)[a]	Sn[a]	1.60		Ti	0.800
(125 kg)[b]	Fe[a]	0.225		Al[a]	0.600
	Cr[a]	0.125		Co	0.470
	O	0.095		Si[a]	0.200
				Mn[a]	0.200
Type 304	Fe[a]	68.635		N	0.130
stainless	Cr[a]	19.000		Cu	0.100
steel	Ni[a]	9.000			
(676 kg) and	Mn[a]	2.000	Ag-In-Cd	Ag[a]	80.0
unidentified	Si[a]	1.000	(2,749 kg)	In[a]	15.0
stainless	N	0.130	(43.6 kg)[b]	Cd[a]	5.0
steel	C	0.080			
(3,960 kg)	Co[a]	0.080	B_4C-Al_2O_3	Al[a]	34.33[c]
(16.8 kg)[b]			(626 kg)	O	30.53[c]
			(0 kg)[b]	B[a]	27.50[c]
				C	7.64[c]
			Gd_2O_3-UO_2	Gd[a]	10.27[c]
			(131.5 kg)	U[a]	77.72[c]
			(0 kg)[b]	O	12.01[c]

a. Elements for which ICP analysis was performed.

b. Weight of material in a control rod fuel assembly.

c. Data are suspect.

3.1.2 TMI-2 Accident Sequence

Over the past several years, considerable effort has been spent in developing a consistent accident sequence based on plant response during the accident and postaccident examinations of core components. Such a sequence is still being finalized. A preliminary theory of core-component damage and relocation and the formation of the upper core cavity is given in Reference 7. A summary of this theory is as follows.

Core uncovering started between 100 and 113 min after turbine trip, which is considered the beginning of the core damage phase of the accident. This is substantiated by the measurement of superheated steam in the hot legs at 113 min. Core temperatures were high enough to balloon and rupture the fuel rod cladding by about 140 min, releasing the noble gases and other more volatile fission products (such as iodine and cesium) that had accumulated in the gap between the fuel pellets and the cladding. Cladding temperatures rapidly increased at about 150 min, due to cladding oxidation, and quickly exceeded the zircaloy cladding melting point. The molten zircaloy dissolved some fuel; this molten U-Zr-O ternary mixture flowed down and solidified in the lower, cooler regions of the core probably at the reactor coolant liquid-vapor interface. At 150 min, the core liquid level was estimated at approximately 0.7 m, which is consistent with the lower limit of previously molten core materials in the center of the core. At this time, the high-temperature zone and most of the core damage was probably confined to the central region of the core.

By 174 min (just prior to the primary coolant pump transient), some of the fuel had been dissolved by molten cladding or melted in the central, highest-temperature regions of the core. This relocation of fuel material into the lower regions of the core probably resulted in the funnel-shaped, end-state configuration as determined from the core-boring operation. Fuel rod remnants composed of oxidized cladding and the undissolved UO_2 fuel remained standing above the solid structure of relocated material. Relatively undamaged fuel assemblies existed around most of the core periphery and beneath the bottom crust of ceramic fuel rod materials. The funnel-like shape of the bottom crust was probably caused by the initial

blockage of flow in the center of the core and diversion of coolant flow to the core periphery. This flow diversion enhanced the heat transfer and prevented the relocating molten core materials from flowing down to the same elevation as that at the core center.

The primary coolant pump transient at 174 min injected as much as 1000 ft^3 coolant in less than 15 s into the core. The oxidized (and embrittled) fuel rod remnants above the solid structure probably fragmented by thermal and mechanical shock, due to the injected water; and the fragments settled to the top of the core region where flow channels were filled, forming the core cavity and a loose debris bed under the core cavity floor. The loose debris particles include agglomerates composed of oxidized cladding, unrestricted fuel pellet fragments, and previously molten fuel rod materials and are well mixed, indicating that agitation occurred during and/or after settling to the core cavity floor.

At 200 min, an additional high-pressure injection system (HPIS) was turned on; and increased coolant was injected in the primary cooling system. The estimate of the injection rate and the water injected by the primary cooling pump transients at 174 min, if directed entirely into the RV, would result in a covered core sometime after 200 min to provide (a) continuous cooling to the surface of the solid structure of relocated core materials and (b) the coolant, which would eventually quench the debris bed. Quenching of the debris bed may have been a relatively long-term and rather violent process, with water gradually penetrating the interior of the debris bed from the core periphery. The resultant steam and hydrogen (byproduct of the steam/metal oxidation process) would rapidly flow from the core into the upper plenum. This process of intermittent water ingress followed by the flow of high-velocity gases out the top of the core could vigorously mix the debris bed as well as bring molten ceramic material from the top of the solid structure up into the debris bed where the agglomerated particles were formed. Cooling at the outside surface of the solid structure would have been insufficient to prevent continued heating from decay heat and remelting of ceramic material within the interior as shown. The high-velocity steam and hydrogen flowing from the core would cause the melting and oxidation which has been observed on

the underside of the core upper-grid structure. An alternate explanation for the end-state conditions observed is that the damage to the upper grid occurred prior to 174 min during core heatup and that the debris bed was mixed by the primary coolant pump after core cooling was reestablished at about 16 h into the accident.

Most, if not all, of the core materials found in the lower plenum probably relocated at approximately 224 min and were molten. The relocation of molten core materials from the core boundaries occurred primarily from the southeast quadrant of the core at core positions P5 and R6 through the baffle plates near the 303-ft elevation. Since there is no voided region in the previously molten core zone, the central portion of the top crust apparently collapsed as the material flowed into the compartment between the baffle plates and core barrel and into the lower plenum, leaving behind a ridge of material at the core periphery. The top of this ridge indicates the top of the crust or solid structure prior to relocation. The volume of this "sinkhole," formed by the existing ridge and identified from video examinations of the core debris bed periphery and core boring at assemblies D4 and D8 and the current top of the crust, is approximately 126 ft^3. This volume is only a little larger than the volume of material estimated to be missing from the core.

The estimated end-state condition of the TMI-2 core immediately following the accident is shown in Figure 10. This figure was constructed using the cross sections of the upper debris bed region, molten core region (agglomerate and previously molten, homogeneous ceramic), and standing fuel rods for the B through P assembly rows described previously (see Figure 4). The upper debris bed surface is approximated in the cutaway view in Figure 10; note the low point of the debris bed near the "B outlet" (east quadrant of the core). The different material structures which currently exist within the core are illustrated approximately to scale. The estimated volumes and masses of the different types of core materials are listed in Table 7.

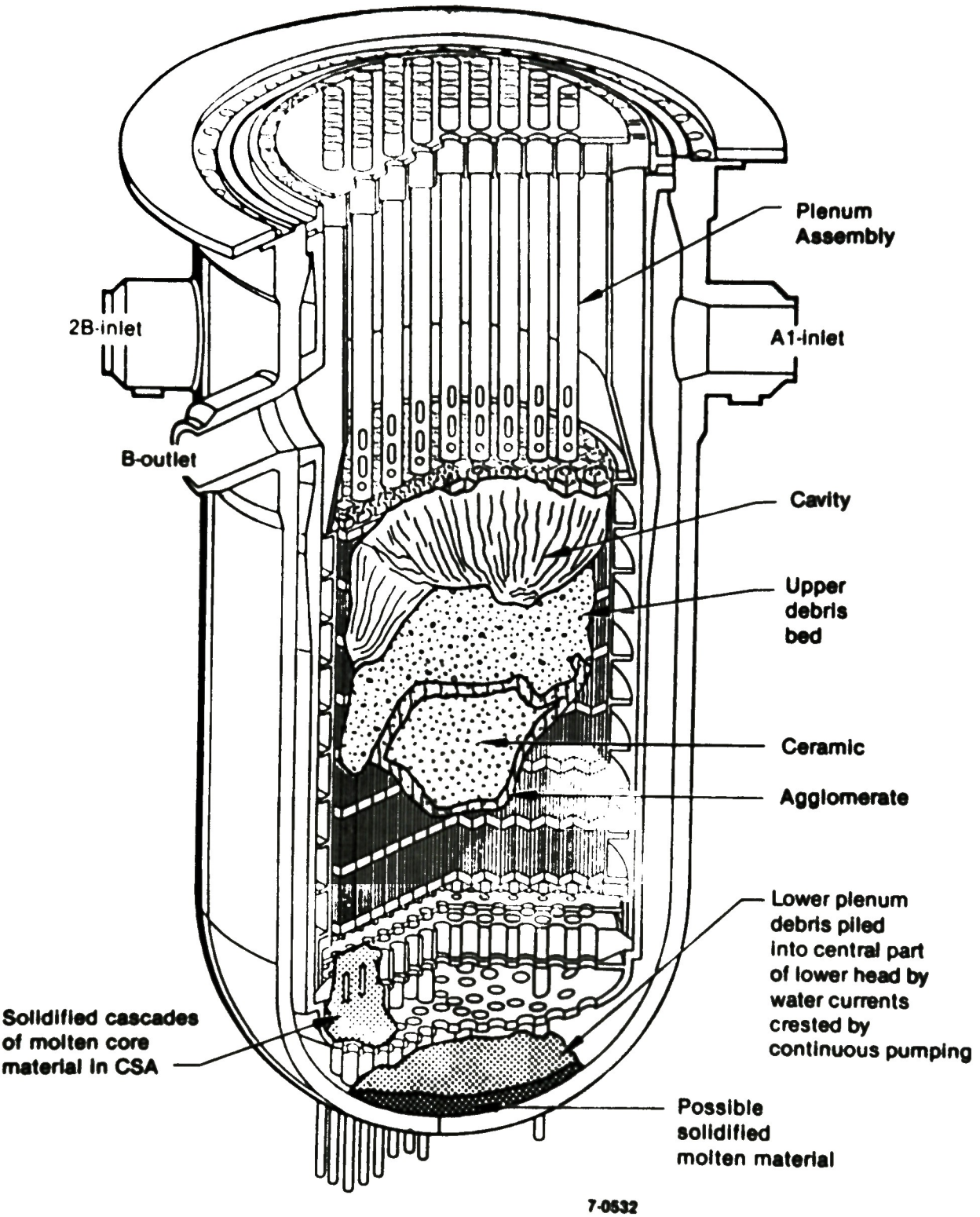

Figure 10. TMI-2 accident end-state core conditions.

TABLE 7. ESTIMATED CORE REGION VOLUMES AND MASSES AT TMI-2 ACCIDENT TERMINATION

Region	Estimated Volume (ft^3)	Estimated Mass (lbm)
Upper core debris	236	66,300
Molten zone	122	55,200
Standing rods	499	114,271
Lower plenum debris	74	34,800

3.1.3 Postaccident Reactor Vessel Internals Events

A series of events, including precursor examinations and disassembly activities, has been accomplished between the accident-sequence termination and October 1986 that have affected or determined the condition of the core-cavity walls and floor. The core components have remained submerged in an ambient temperature and pressure, treated, water solution with the following target specifications:

- ph: 7.5 to 7.2
- boron: >4350 ppm
- buffer: NaOH.

No activities or examinations were attempted until personnel access inside the reactor building was reestablished in 1981. A summary of significant examination and disassembly events that have occurred follows.

3.1.3.1 Quick-Look Video Surveys. In 1982, control rod leadscrews from core positions H8, E9, and B8 were removed for possible CCTV access to the core area. The control-rod spider was still in place at B8, but was missing at core positions H8 and E9. The CCTV survey discovered a large, empty region (core cavity) in the upper-core region.

3.1.3.2 APSR Assembly--Insertion.[7] In the first quarter of CY-1983, an attempt was made to insert all eight APSR assemblies which, if successful, would relocate the APSRs 37 in. downward (see Figure 4 for APSR core positions). Insertions into the core cavity depths were as follows:

Core Position	Insertion Depth (in.)
D6	0
D10	4
F4	30
F12	35
L4	8
L12	31
N6	0
N10	37

3.1.3.3 Ultrasonic Scanner Survey.[8] On August 31, 1983, an ultrasonic scanner survey was made to determine the shape and dimensions of the core cavity. The core topographical features included the following:

- The cavity extended from the upper grid plate bottom downward to approximately 7.5 ft above the core bottom and radially to the core former wall in some places.

- The core cavity volume was equivalent to approximately 26% of the original core region.

- Fuel assembly remnants appeared to encircle the core cavity completely toward the upper grid plate; the maximum fuel assembly damage appeared to be on the core east side, and the least fuel assembly damage on the core west side.

- The APSRs that had been inserted projected from the cavity ceiling and interfered with ultrasonic-scanner measurement of topography in the cavity-upper regions.

3.1.3.4 Reactor Vessel Head Removal.[9] In July 1984, the RV head removal, which included prerequisite uncoupling of the leadscrews from the control-rod assemblies and raising each leadscrew into the control-rod-drive mechanism (CRDM), was accomplished. The leadscrew uncoupling indicated the following:

- Thirty control-rod spiders were supported by the fuel assembly upper end fitting.

- Twenty-three control-rod spiders appeared to be unsupported by the fuel assembly upper end fitting, or were missing.

- Four control-rod spiders became supported by the fuel assembly upper end fitting when lowered a small distance (less than 2 in.).

3.1.3.5 Plenum Assembly Removal.[10,11] In May 1985, the plenum assembly removal, which included prerequisite dislodging of fuel assembly upper end fittings (see Reference 10), water jet flushing loose debris from horizontal (upward facing) surfaces (see Reference 11), and visual (CCTV) examination of the assembly, was accomplished. The dislodging of fuel assembly upper end fittings[11] indicated the following:

- Four upper end fittings (core positions D5, F3, F13, and K14) could not be dislodged.

- Ten upper end fittings (core positions E4, G14, K6, L2, L13, O3, O8, O11, P8, and R6) could only be partially dislodged.

- All other end fittings were missing, dislodged, or attached to their respective fuel bundles.

The water jet flushing removed loose debris "ranging in size from very fine particles to nearly fuel pellet size" from the plenum assembly, upward-facing, horizontal surfaces. Postflushing CCTV inspection indicated "some of the debris actually adhered to the plenum and could not be removed."

The CCTV examination revealed that a probable thermal excursion produced damage to the plenum assembly lower surface, as depicted in Figure 11.

3.1.3.6 Reactor Vessel Lower Head Region Video Surveys. In February, July, and December 1985 and February 1987, the RV lower head region was partially surveyed (as shown in Figure 12) with a CCTV camera lowered through the downcomer annulus at 13°, 63°, 115°, 167°, 245°, and 345° (hole numbers 1, 4, 5, 7, 11, and 14, respectively) azimuthal positions. Samples of the loose debris deposited on the RV lower head were collected with a remote manipulator lowered through hole numbers 7 and 11. The surveys indicated the following:

- Ten to twenty tons of probable core material had collected in the region between the RV lower head and the flow distributor.

- The core material form ranged from particles the size of coffee grounds to a vertical wall (like a curtain) extending toward the flow distributor below core position H12 that appeared to be lava-like (previously molten).

- Previously molten material was in or above the flowholes in the flow distributor below core positions D13, E2, K14,K3, N3, O5, and R6 (see Figure 13)

- Both the guide tube lower end and the nozzle upper end of in-core instrument number 45 (below core position R7) are partially ablated.

- Possible "high water" marks and/or surface deposits from interaction with molten core material were observed on in-core instrument guide tube numbers 44, 45, and 47 (below positions P6, R7, and O10) below the flow distributor.

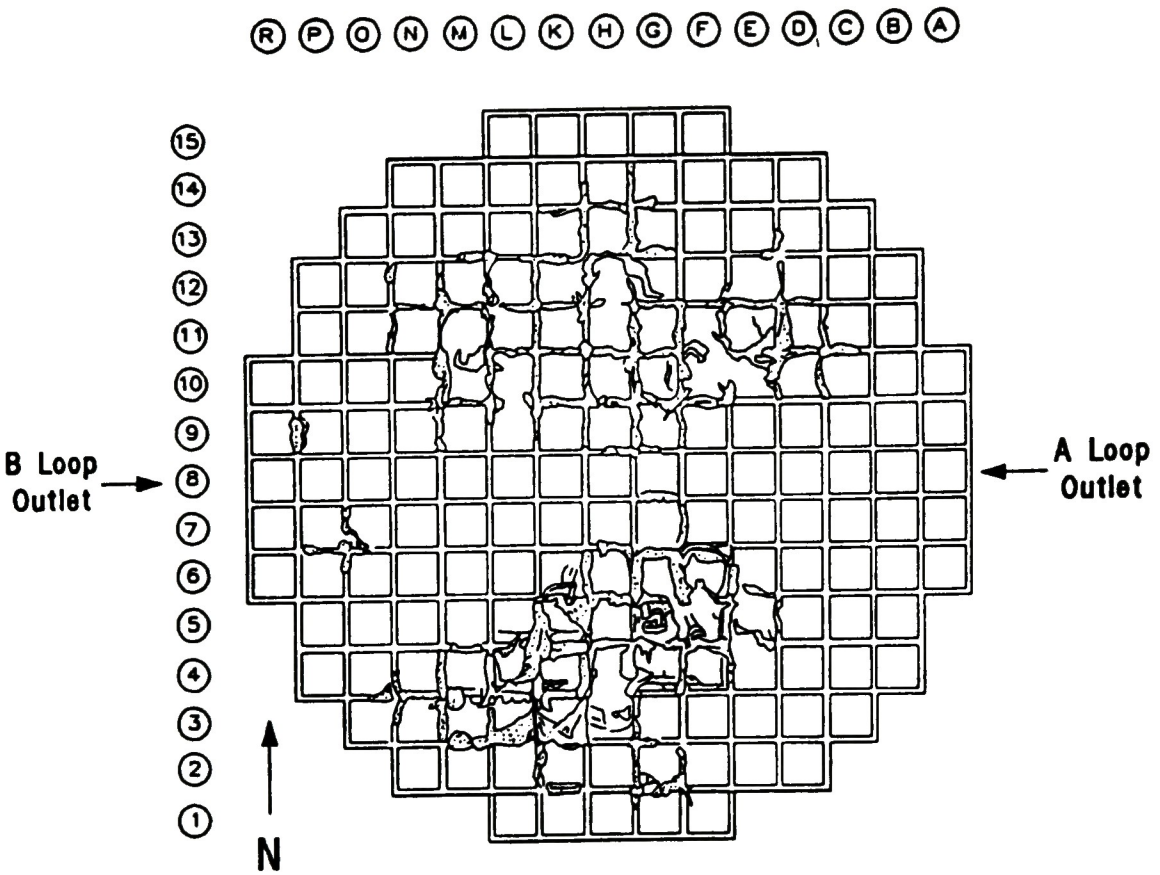

Figure 11. Damage map of the TMI-2 fuel assembly upper grid plate.

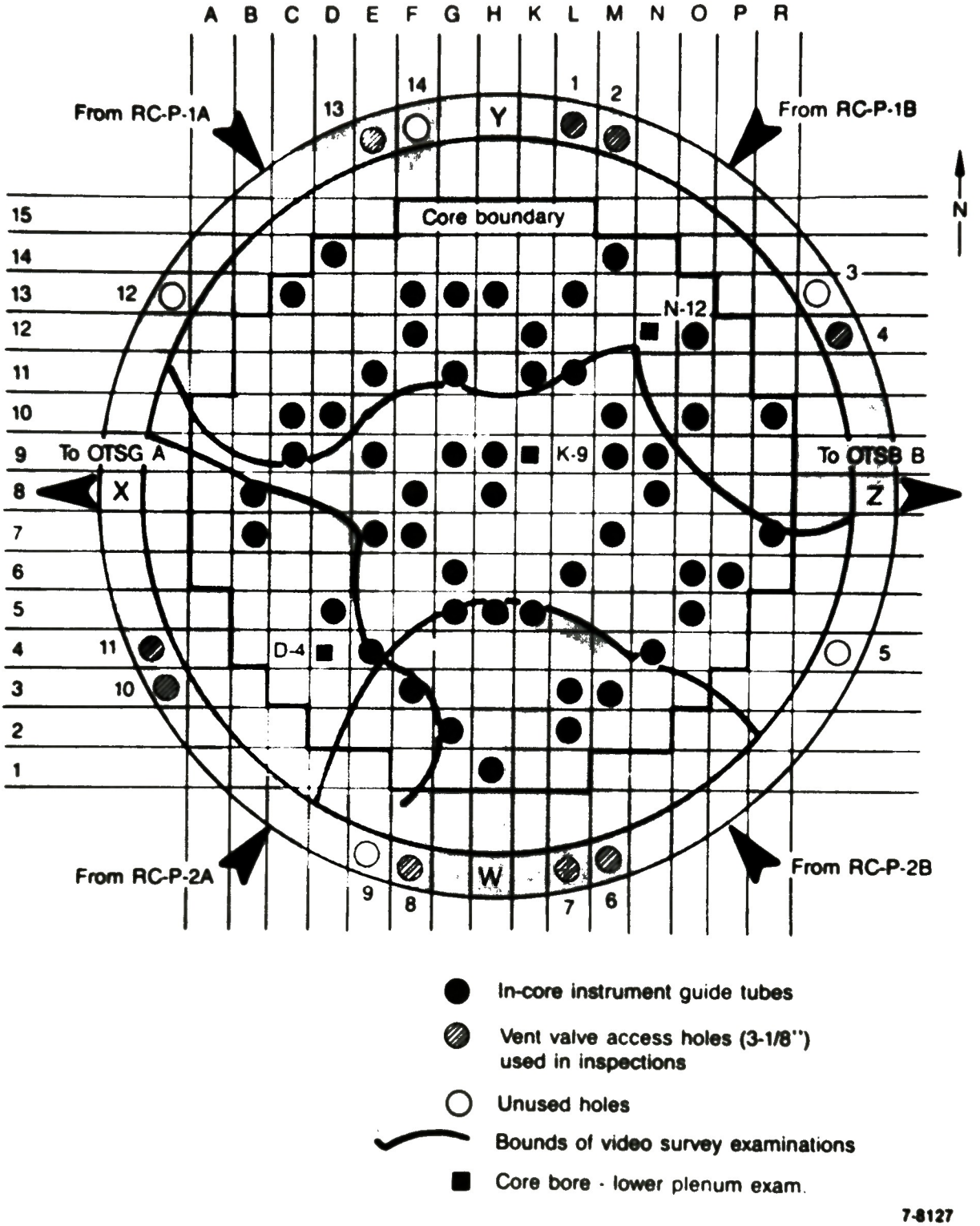

Figure 12. Reactor vessel lower head region video survey map.

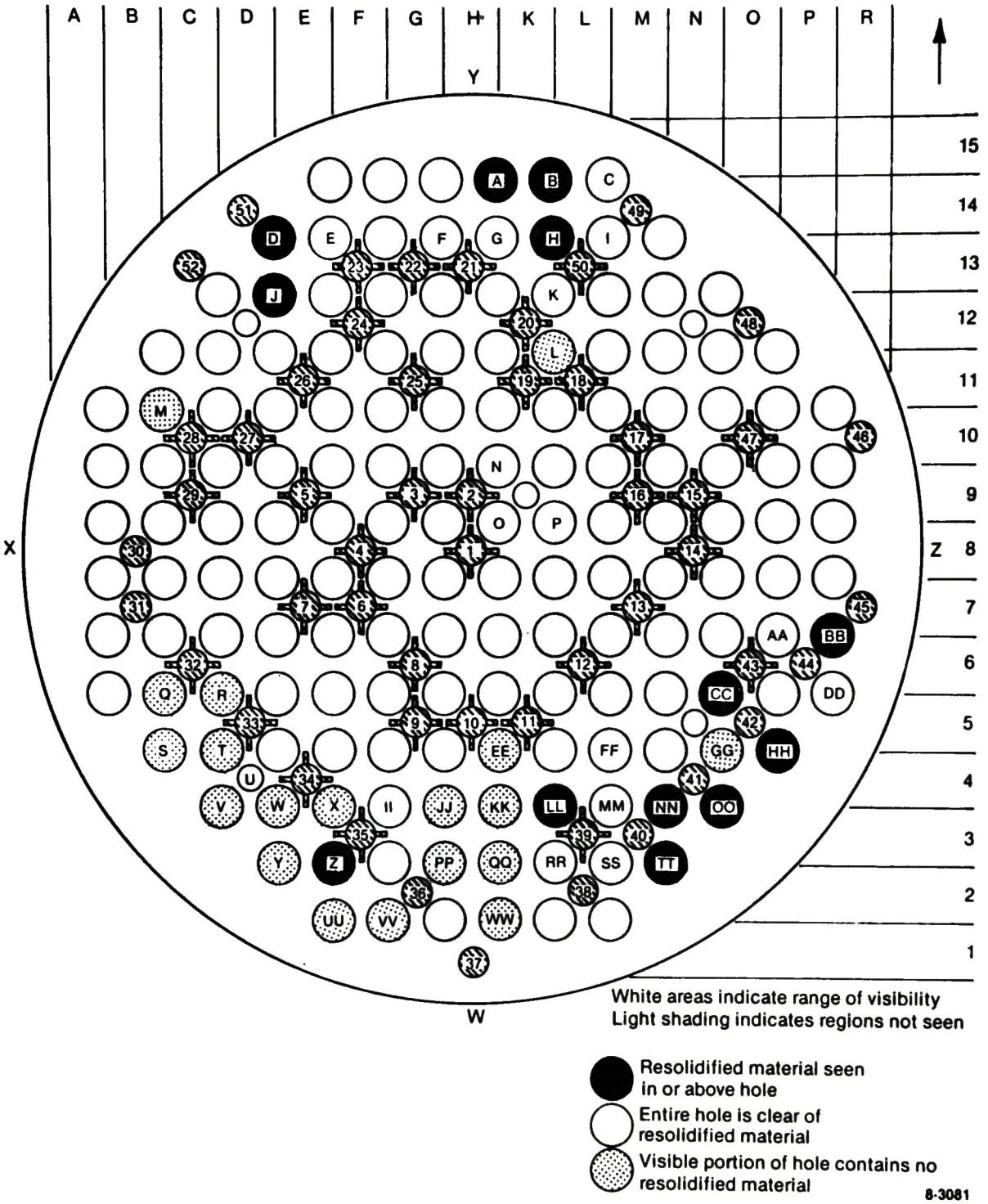

Figure 13. Resolidified material at bottom of flow distributor head.

3.1.3.7 Fuel Removal. Fuel removal commenced on November 12, 1985, and has continued through September 1987. In FY-1986, fuel removal was limited to the core cavity walls and floor and consisted of (a) upper end fittings from fuel, control rod, and burnable poison rod assemblies; partial fuel assemblies; and unsegregated loose debris and (2) a cumulative total mass of 51,000 lb of the 300,000-lb core. The early fuel removal included both successful and unsuccessful attempts to topple standing peripheral fuel assemblies onto the core-cavity floor to provide clearance for the fuel canisters, occasional unaided toppling of unstable standing peripheral fuel assemblies onto the core-cavity floor, and shear-tool sectioning of some partial fuel assemblies lying on the floor of the core cavity. A total of 49 fuel canisters were transferred to the TMI Fuel Handling Building, and 21 fuel canisters were shipped to the INEL (see Appendix F).

Video surveys of the core cavity walls and floor were made in December 1986 and January and June, 1987. Six fuel rod segments were cut from standing fuel rods at the core south (core position L1) and southeast (core positions M2 and N2) sides in December.

The fuel removal activities in FY 1986 made the following changes to the core cavity:

- The fuel assemblies still standing (June 1986) at the core periphery were reduced to 20; fourteen (A6, A7, A8, A9, A10, B4, C3, D2, D14, E2, L1, L15, N14, O13 and O12) with upper end fittings and six (B12, E2, L1, N2, O3 and R10) without upper end fittings.

- Sufficient loose debris had been removed from the core cavity floor to expose (a) the hard crust near the 70-in. elevation above the original core bottom and (b) a horseshoe-shaped ring of agglomerated (cemented-together rod bundle remnants) core material projecting inwards from the standing fuel rods above the hard-crust surface, as shown in Figure 14. The ring extended from around the 100-in. elevation above the core bottom to the hard crust, where it receded, creating a cave-like geometry.

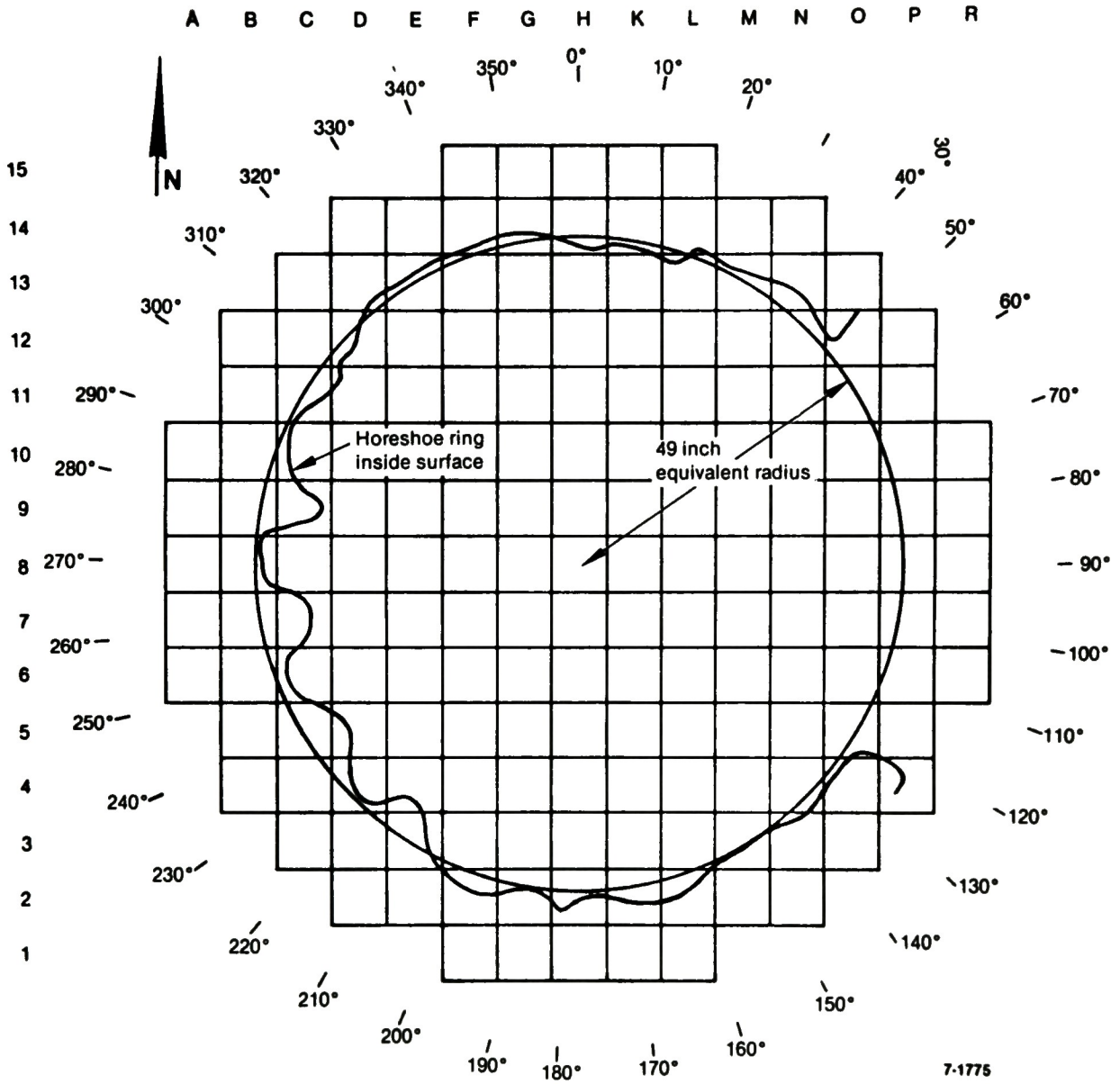

Figure 14. Estimated radial configuration of horseshoe-shaped ring of agglomerate core material.

In July and August, fuel canisters D-141 and D-153 were unloaded at the INEL; and the following samples of distinct core components were acquired for possible and planned future examinations:

12	fuel assembly upper end fittings
10	control or burnable poison rod assembly upper end fittings
2	burnable poison rod assembly retainers
15	fuel rod upper sections
7	sets of control rod/guide tube upper sections

Table 8 provides a complete list of specific TMI-2 fuel assembly upper end fittings placed in temporary storage in drums in the TAN 607 Hot Shop.

During FY-1987, fuel removal included most fuel assemblies still standing at the core periphery, the fused-together core material in the lower core region, and 140 of the fuel assembly lower ends projecting upwards from the lower grid (Figure 15). In November, the core-boring equipment was used by GPU[12] as a milling device to loosen and/or pulverize the fused-together core material in the core central region by drilling 409 holes with a 3.4-in.-diameter, solid-faced bit in the overlapping location pattern, as shown in Figure 16. Video surveys of exposed surfaces of the core cavity walls and floor and the lower CSA were made in all months except January and April.

The video surveys were recorded, and reviews of the tape recordings provided the following observations:

- There is a large oblong hole in the baffle plate near the 75-in. elevation above the fuel rod bottoms adjacent to core positions P5 and R6 (see Figure 17).

- Solidified core material from the space between the baffle plates and core barrel exists between the lower grid and lower grid distributor plate on the core southwest, west, northwest, north, and northeast sides (see Figures 17 and 18).

TABLE 8. TMI-2 FUEL ASSEMBLY UPPER END FITTING SAMPLE LIST

Core Position	Fuel Canister Item Number		Storage Drum Location		Description	Distinction
	D-141	D-153	Number	Basket		
B8		9	4	B	Control rod fuel assembly upper end fittings	Examined leadscrew position (P6)
B10		13	3	A	Control rod fuel assembly upper end fittings	Mirror image to canister D-153 item 8
C7	3		2	A	Control rod fuel assembly upper end fittings	Fuel and CR/GT rod examination unit
C11	4		2	B	Control rod assembly upper end fitting	Massive damage to fuel assembly upper end fitting
D8		3	4	A	Control rod fuel assembly upper end fittings	Core bore drill site
G3		4	4	B	Control rod assembly upper end fittings	Upper grid damage region periphery
H1	11		1	B	Peripheral fuel assembly upper end fitting	Core periphery. In 12/06/85 video survey
H8	8		1	A	Control rod fuel assembly upper end fittings	Core center position. Examined leadscrew position
K4		1	1	A	Burnable poison rod assembly retainer	Upper grid damage region
K15	7		1	A	Peripheral fuel assembly upper end fitting	Near mirror image to canister D-141 item 11 (H1)
L3	6		2	A	Burnable poison rod assembly retainer	Upper grid damage region periphery
M9	8		3	A	Control rod fuel assembly upper end fittings	Adjacent to the BPR fuel assembly
N9	4		2	A	BPR fuel assembly upper end fitting	Mating fuel assembly upper end fitting to BPR spider below
N9	5		1	A	Burnable poison rod assembly spider	Only PBR assembly 17-4 PH SS parts
O10		6	3	B	BPR fuel assembly upper end fitting	BPR fuel assembly upper end fitting with guide tube stubs
P6		8	4	A	Control rod fuel assembly upper end fittings	Core east side high damage zone. Mirror image to canister D-153 item 13 (B10)

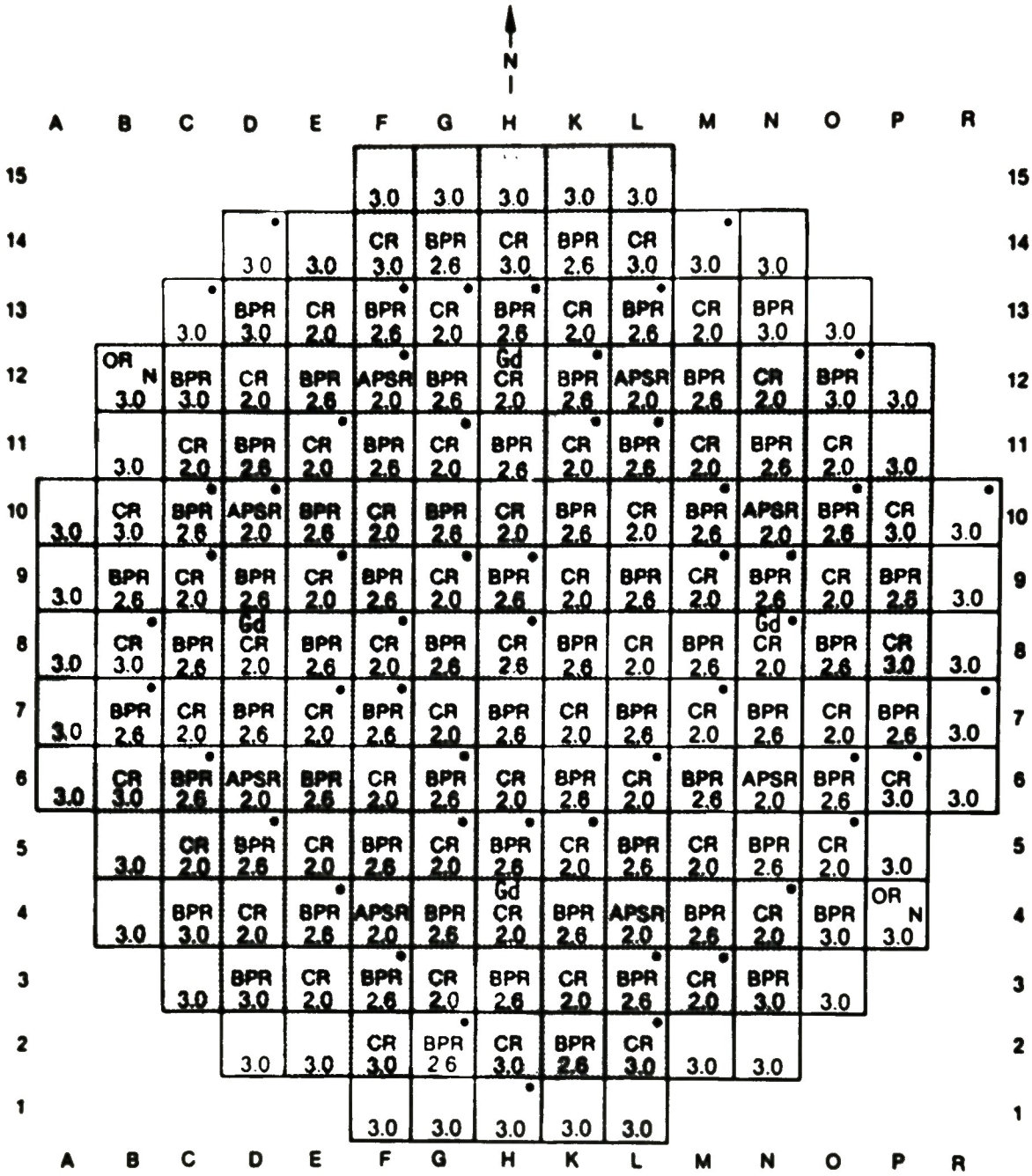

Figure 15. Status of fuel assembly lower end removal on October 6, 1987.

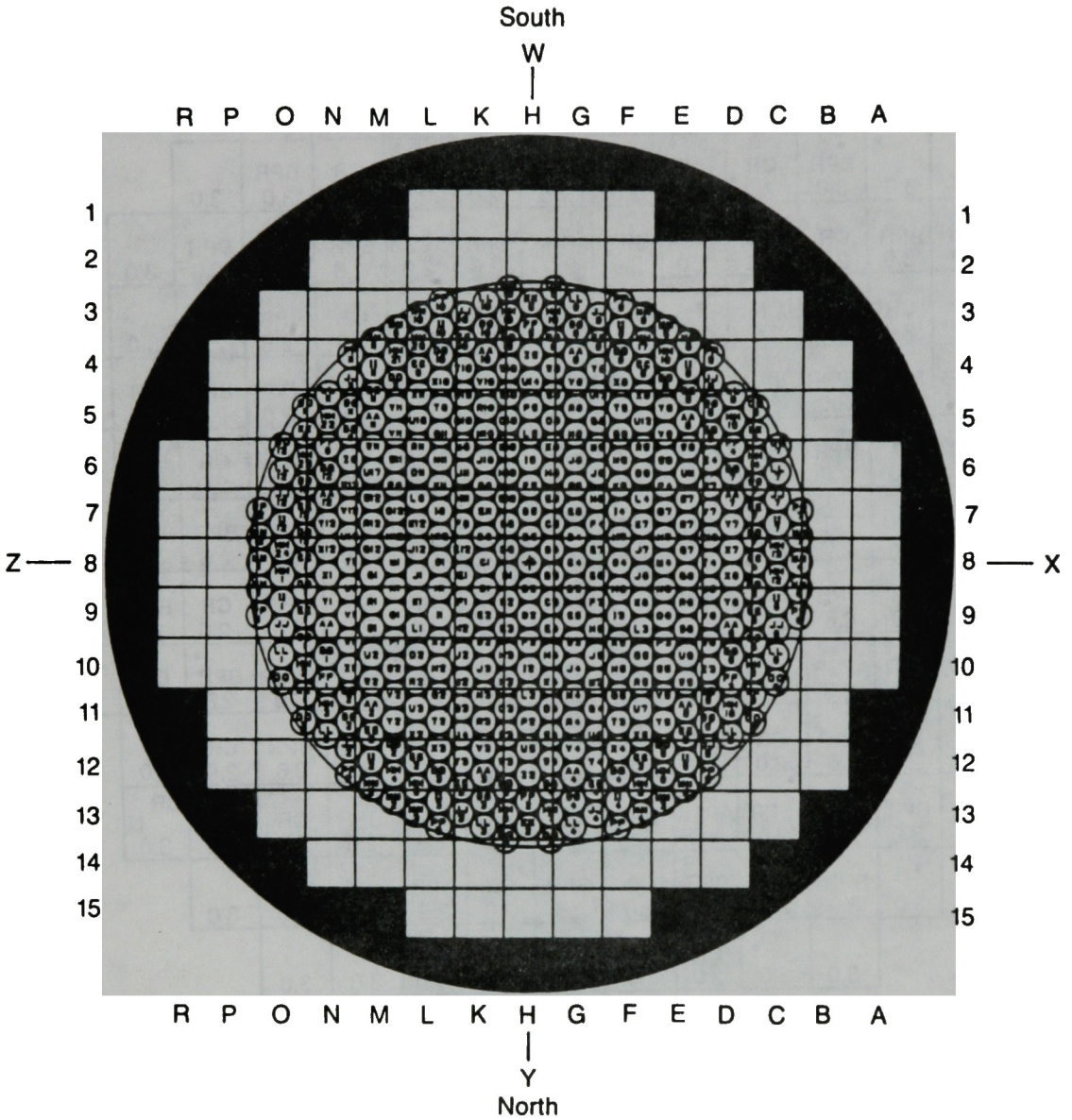

No ligament 421-holes

7-6423

Figure 16. Overlapping-hole drilling pattern.

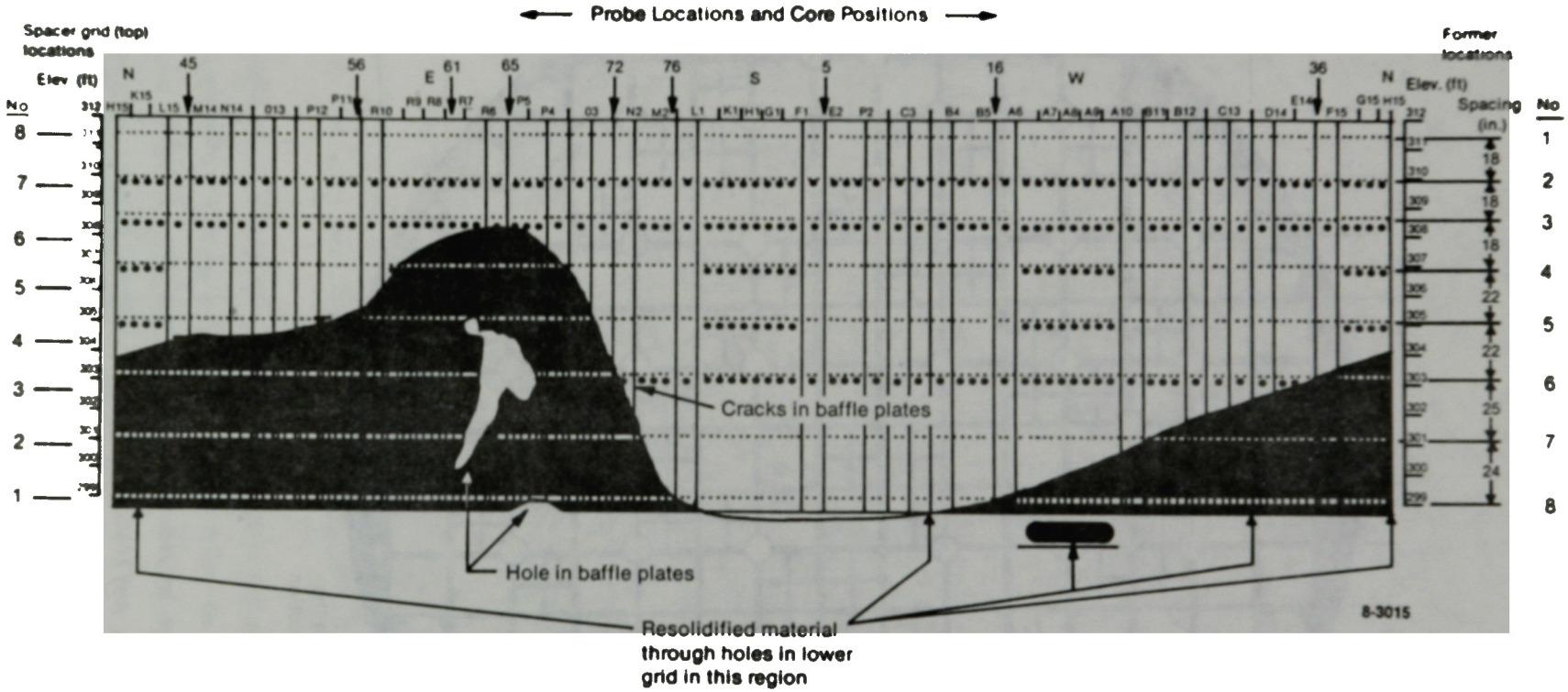

Figure 17. Fuel debris profile behind core baffle plate (laid flat).

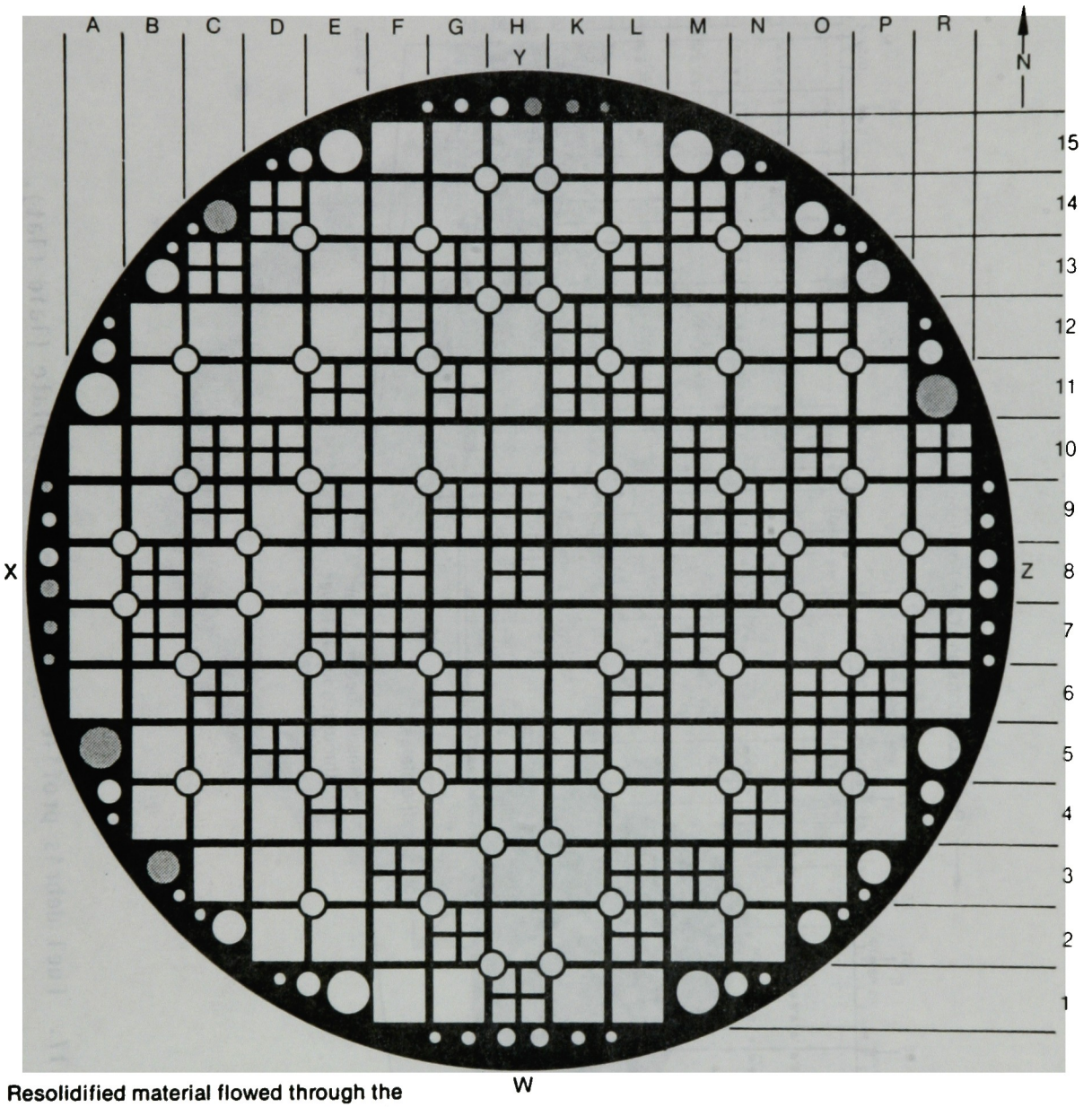

Resolidified material flowed through the shaded holes in the lower grid rib section

8-3072

Figure 18. Locations of resolidified material in lower grid flow holes.

- Veins of solidified core material penetrated downward through the rod bundle to within 2 in. of the bottom spacer grid at the intersection of core positions G8 and F9; within 30 in. of the fuel rod bottoms at core position H15; and to the lower grid at core positions L14 and M14.

The FY-1987 total cumulative mass of core material removed was 165,000 lb. A total of 172 fuel canisters was transferred to the TMI Fuel Handling Building, and 77 fuel canisters were shipped to INEL. Appendix F lists the contents of the fuel canisters loaded through September 30, 1987. Appendix E lists the copies of recordings of the video surveys made during the fiscal year.

3.1.3.8 Biological Growth. In January 1986, the RV water turbidity began increasing from a biological growth (microorganisms) in the water. The source of the microorganisms was believed to be the river water, which became mixed during the accident with reactor coolant in the reactor building basement and was subsequently introduced into the RCS after the contaminated basement water had been purified by the TMI-2 watercleanup system. The growth of the microorganisms was believed to be caused by (a) spillage of defueling tooling hydraulic fluid into the RV and (b) other secondary events, such as increased lighting, aeration, and oxygen dispersion of the RV water. Both aerobic and anaerobic microorganism types were identified in the colony that evolved.

The water turbidity prevented (a) identification of most material which was loaded into the fuel canisters after January 1986 and (b) clear video surveys of surfaces and objects exposed by the loose debris removal.

In April 1986, a biological growth cleanup program commenced consisting of chemical (hydrogen peroxide) addition to the water to kill the organisms and water-filtering and feed-and-bleed operation to decrease the water turbidity. The biological growth condition continued to be a problem during the remainder of the fiscal year as hydraulic fluid spillage continued.

In early FY-1987, the addition to the water filtering system of a filter-aid feed station, which combined a polymer coagulant with the diatomaceous earth in a bleed-and-feed mode, successfully decreased the water turbidity.

3.1.3.9 Core Boring. In July and August 1986, approximately 60 holes were drilled through and/or into the lower core region.

The July drilling was for the purpose of (a) acquiring lower core and RV lower head region core material samples in the as-stratified condition and (b) visual (CCTV) inspection of the exposed lower core and CSA regions and lower head region core material upper surface. Holes 3.65 in. in diameter were drilled through the lower core region at the ten core positions (D4, D8, G8, G12, K6, K9, N5, N12, O7, and O9) shown in Figure 19, and 1.26-in.-diameter holes were drilled into the lower head core material to 8 in. above the RV lower head below core positions D4, K9, and N12. The core bores and casings were loaded into TMI-2 fuel canisters and shipped to INEL in September 1986.

The August drilling consisted of using an approximately 2-in.-diameter, solid-faced bit at 48 locations within the 6-ft- (73.2 in.) diameter central core region to make the lower core region fuel removal easier. Table 9 lists the core locations, drill depths achieved, and drill material left in the lower core region during the drilling campaign.

The core-boring program produced the following information about the condition of the lower core region, the CSA region, and the core material deposited on the RV lower head.

- A region of previously molten, consolidated core materials estimated to be approximately 122 ft^3 (about 10% of the original core volume) was confirmed to be in the lower, central region of the core. This consolidated structure is approximately 4-ft thick in the center of the core and 1- to 2-ft thick near the core periphery and is roughly shaped like a bowl extending

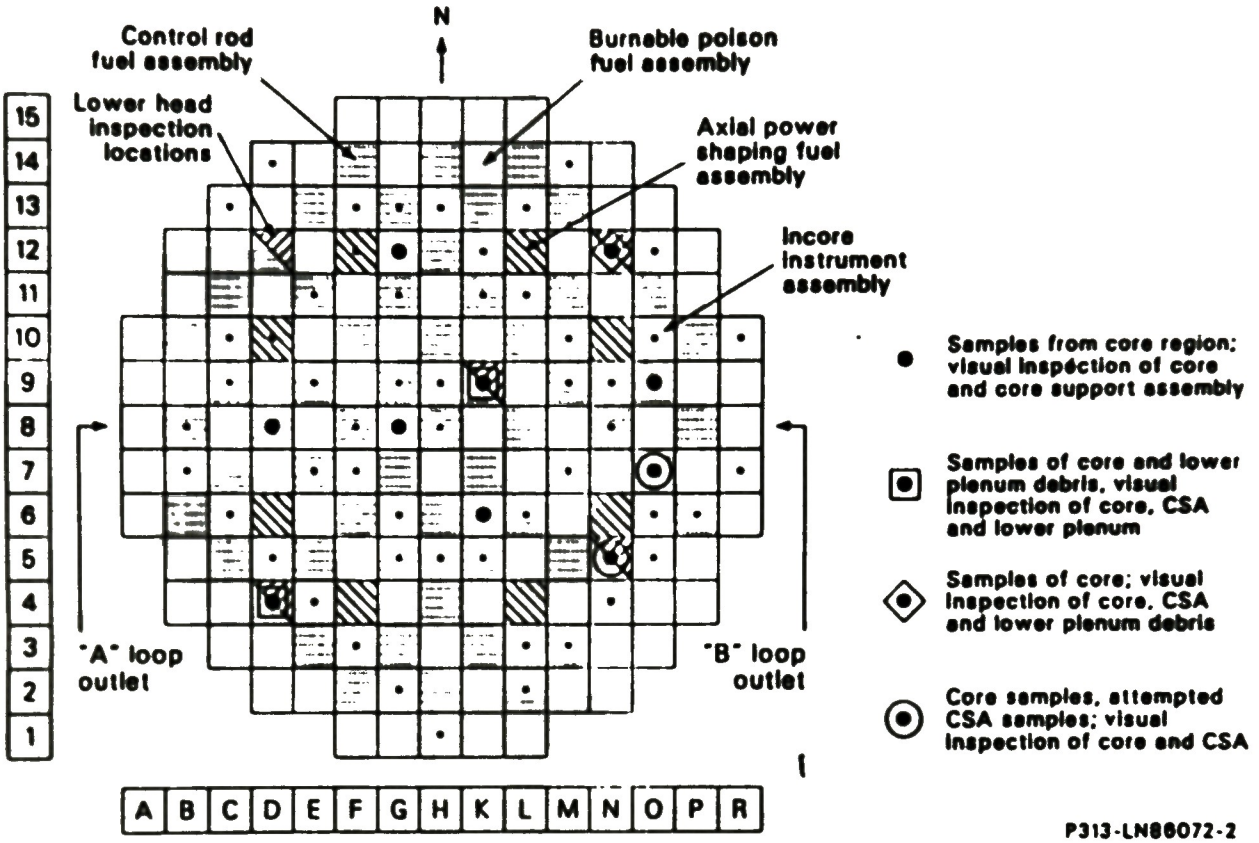

Figure 19. TMI-2 core bore locations.

TABLE 9. DRILLING OF TMI-2 LOWER CORE REGION IN AUGUST 1986

Core Location			Core Location		
Radius (in.)	Azimuth (°)	Depth (in.)	Radius (in.)	Azimuth (°)	Depth (in.)
5.2	35	0.8	30.0	168	34.8
	155	2.3			
			35.8	175	11.4
9.0	30	6.2		189	14.6
	210	46.8		203	20.2
	270	48.1		217	4.1
	330[a]	39.1		231	1.3
				245	18.6
12.0	11	5.3		259	16.9
	311	42.3		273	20.4
				287	2.8
12.2	12	0.8		301	0
	112	40.3		315	2.2
	127	40.0		350	26.1
16.25	16	6.3	36.6	182	47.6
	46	45.1		196	32.7
	284	9.0		210	30.7
	316	33.1		224	3.3
	344	5.0		238	22.0
				266	25.3
18.5	31.5	37.0		252	5.7
	151.5	36.2		322	4.0
	271.5	35.7			
20.5	14.5	35.8			
	48.5	1.3			
	74.5	42.0			
	168.5	28.0			
	228.5	47.9			

a. Broke off lower 48-in. section of drill steel.

down toward the bottom of the core. Intact rod stubs exist from the bottom of the core up to the consolidated region. Core position K8 was determined to be a possible location where the consolidated material might have penetrated to the fuel assembly lower end fitting.

At several core-bore locations, metallic inclusions appear in the upper portion of the consolidated region; while in others, metallic inclusions are observed near the center and/or bottom of the consolidated region. The shapes of the metallic inclusions vary widely.

- The primary migration path of the previously molten material into the lower plenum appears to be located on the east side of the core near the periphery, primarily at assemblies P-5 and R-6.

- The CSA appears to be undamaged in those areas where previously molten ceramic materials have frozen in place between CSA structural members. However, one core instrument guide tube is damaged near the lower grid flow distributor; and two others were missing or covered by solidified material below the lower grid.

- The fuel debris resting on the bottom vessel head near the center of the RV appears to be loose and relatively fine as compared with the large, agglomerated debris existing near the edge of the RV in the lower plenum. The depth of vessel bottom head fuel debris was estimated to be as follows:

Core Position	Depth[a] (in.)
D4	18
K9	30
N12	12

a. Depth measured after boring with possible overlay of boring debris.

- The core boring produced cutting debris, including sand-like material, shards of fuel rod material, and fuel assembly lower end fitting plugs, that (a) settled into the standing rod bundles and onto the horizontal surfaces of the lower CSA and RV lower head core debris or (b) obstructed holes in the CSA plates. Future acquisition of core material samples from below the core must be accomplished carefully to avoid or segregate the core material which relocated during the core-boring campaign.

3.1.3.10 Core Barrel Assembly Fiber Optic/Video Survey/Probing. In February 1987, GPU Nuclear surveyed and probed the compartment between the baffle plates and core barrel using a fiber optic device and video-recording the fiber optic image. Nine azimuthal locations were probed and surveyed. (Figure 17 is a map showing the estimated profile of core debris in the compartment between the baffle plates and the core barrel.) The video images were inadequate for determining the appearance of the debris in the compartment.

3.1.3.11 Current State. The state of the TMI-2 RV internals as of September 30, 1987, is shown in Figure 20. Few regions of the RV remain unexplored; but important core damage progression data may be obtainable from some of those unexplored regions, as follows:

- The east, and southeast sections of the outer two rings of lower core region fuel assemblies and the baffle plates.

- The lower regions of the compartment between the baffle plates and core barrel, for the presence and/or prior presence of core material and damage to the formers and core barrel.

- The northeast, east, and southeast sections of the CSA where escaping molten core material has solidified.

- The lower region of core material resting on the RV lower head, where a region of nonfuel core material has been predicted to be.

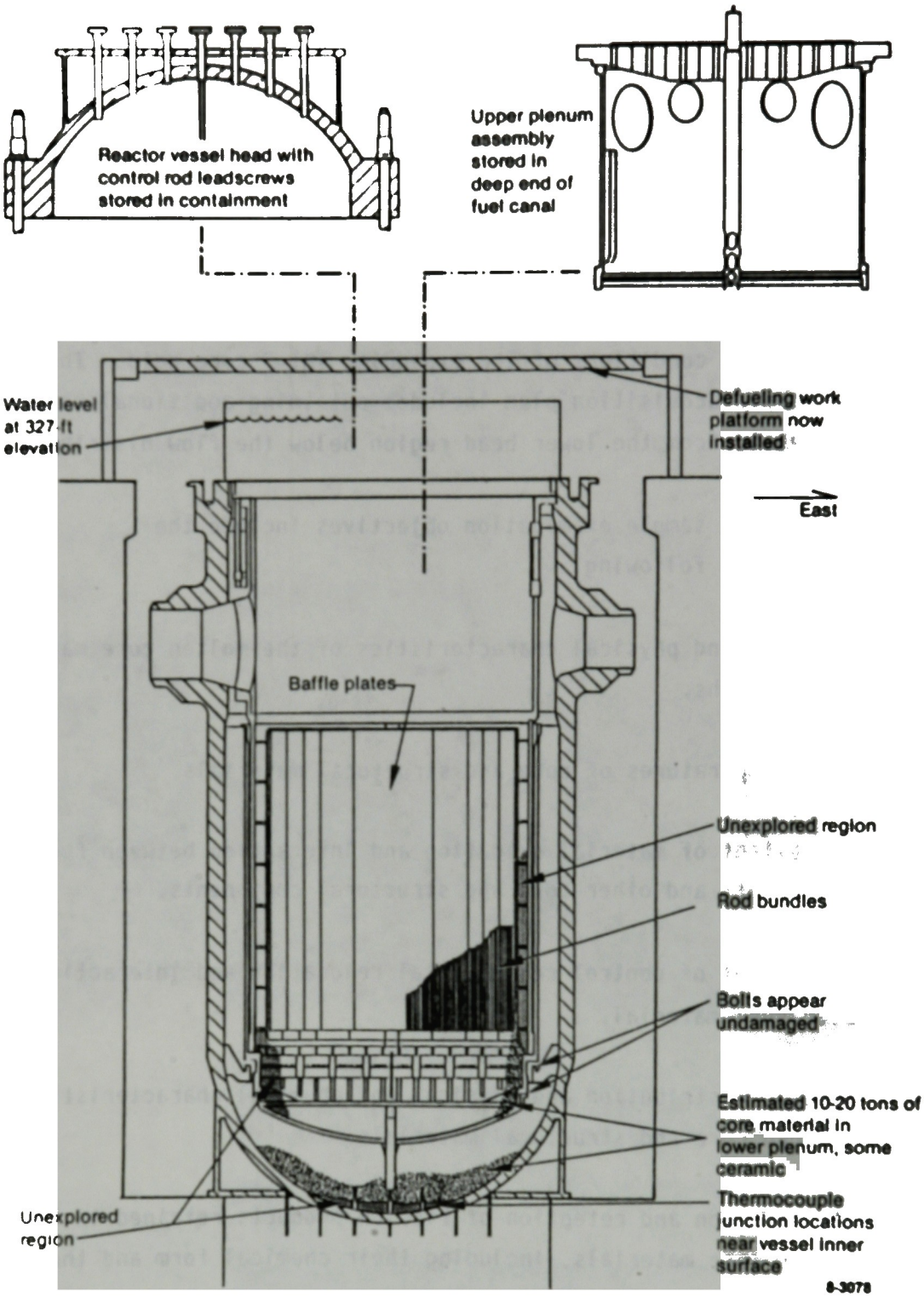

Figure 20. Core and reactor vessel conditions in October 1987.

3.2 Purpose

In addressing the data requirements recommended in the TMI-2 Accident Evaluation Program document,[2] a scope of work was formulated to support these data needs while recognizing certain limitations in data acquisition inherent in the TMI-2 defueling environment. As such, the purpose of the work plan is the acquisition and examination of samples of core and noncore material from the RV during completion of defueling, along with video documentation of the conditions of the expanding TMI-2 core void. The scope of the sample acquisition plan includes obtaining additional samples of the loose debris from the lower head region below the flow distributor.

The specific RV sample examination objectives include the determination of the following:

- Location and physical characteristics of the molten core material escape paths.
- Peak temperatures of core and structural materials.
- The extent of material oxidation and interaction between fuel rod components and other core and structural components.
- The extent of control rod material relocation and interaction with fuel material.
- Spatial distribution and physical and chemical characteristics of damaged core and structural materials.
- Distribution and retention of fission products retained in the RV and in core materials, including their chemical form and the mechanism of retention.
- Interaction of burnable poison rod materials with fuel rod materials and the effect on core heatup.

- The extent and type of damage to the CSA and instrument tube penetrations and amount of material relocation into the lower plenum.

3.3 Accomplishments

3.3.1 Sample Acquisition

3.3.1.1 Acquisition Equipment. The RV sample acquisition program has provided the following sample acquisition tooling and examination equipment:

Reference	Description
EGG-TMI-6834	Core-Boring Equipment
Jensen Drilling Co.	Instrumented drilling machine
EGG Drawing 419931	Lead transfer cask
EGG Drawing 419932	Drill indexing platform structure assembly
EGG Drawing 420120	Lower casing clamp hydraulic assembly
EGG Drawing 420126	Drill indexing roller platform assembly
EGG Drawing 420155	Underwater structure assembly
EGG Drawing 420170	Cask roller platform assembly
EGG Drawing 420193	Underwater structure and tilting platform assembly
EGG Drawing 420234	Middle clamp and support assembly
EGG Drawing 420235	Hydraulic control assembly
EGG Drawing 420418	Underwater structure out-of-tolerance indicator
EGG Drawing 420430	Underwater cylinder and rod end clevis
EGG Drawing 420232	REES underwater video camera manipulator assembly
Wild-Heerborg	Computer-aided theodolite indexing system
	Core Topography Equipment
	Black-and-white, closed-circuit video system, including camera support and articulation tooling
	Enhanced still image videotape processor, including software
	Video-recording-to-enhanced-still-image hard copy processor, including software
GEND-INF-012	Multitransducer searchlight-beam ultrasonic scanner system

Reference	Description
EGG-TMI-6531	Loose Debris Collection Tooling
EGG Drawing 417983	Clamshell-type loose debris collection tool
EGG Drawing 417984	Rotating-tube loose debris collection tool
EGG Drawing 418075	Loose-debris sample handling cask
	Fuel Canister Unloading Equipment:
EGG Drawing 420596	Transfer table assembly
EGG Drawing 420713	Electrical installation (transfer table control)
EGG Drawing 420535	Examination fixture assembly
EGG Drawing 420429	Sample handling equipment assembly
EGG Drawing 420558	Holddown spring removal press assembly
EGG Drawing 420477	Potting system assembly (core bores)
EGG Drawing 419662	Core barrel disassembly machine (core bores)
EGG Drawing 420387	Laydown and lifting fixtures
EGG Drawing 420590	Vent and drain assembly (fuel canister)
EGG Drawing 420593	Tools and support assemblies
EGG Drawing 421144	Canister lift fixture
EGG Drawing 346945	Three (3) 3 Bechtel side loading debris buckets
EGG Drawing 421446	Special distinct component extraction tools
--	Special hand tools for equipment installation, operation, and maintenance
N/A	Rees Model R-93-CCU CCTV camera and remote control system and Panasonic Model NV 5410 video monitor
EGG Drawing 420481	Fourteen (14) core bore containers Distinct component storage drums Fuel/control rod cut-off band saw
TMI Spectrometer Design Data Package by A. E. Procter and D. W. Akers	TMI mobile gamma spectrometer system/scanner (for INEL core bore and distinct component examination)

3.3.1.2 Samples. The RV sample acquisition program has furnished the samples listed in Appendix D, Sections C, D, E, F, and G to EG&G for examination. Samples that were acquired in FY-1987 include the following:

TMI-2 Location	Sample Description	Date Acquired
Core Position M11	91 lb of rock-shaped pieces of fused together core material ranging in size from 52 lb to pea-size	December 1986

TMI-2 Location	Sample Description	Date Acquired
Core Position H8	13 lb of fused-together core material up to 4.2 lb in size	December 1986
Core Position F6	13 lb of fused-together core material pieces ranging up to 2.1 lb in size	December 1986
Core Position H9-K9	8 lb of fused-together core material pieces ranging up to 0.2 lb in size	March 1987

In addition, the core material in the fuel canisters listed in Appendix F is available for examination.

3.3.2 Examination Reports and Records

The RV sample examination program has produced the following documentation:

Report Number	Title	Status
	Numerous videotape recordings of CCTV scans between 1982 and 1986. A listing of these tapes is given in Appendix E.	
GEND-INF-031 Volume I	Preliminary report of TMI-2 in-core instrument damage	Issued January 1984
Letter Report	The FY 1983 Examination of the Lower 3.175-m Section of the H8 Leadscrew from TMI-2	Issued December 1983 Revised March 1984
EGG-TMI-6531-1 Revision 1	TMI-2 Core Debris Grab Sample Quick Look Report	Issued March 1984
GEND-INF-044	TMI-2 Leadscrew Debris Pyrophoricity Study	Issued April 1984
GEND-INF-031 Volume II	TMI-2 In-Core Instrument Damage--An Update	Issued April 1984

Report Number	Title	Status
GEND-INF-012	Design and Operation of the Core Topography Data Acquisition System (initial core cavity topographic mapping)	Issued May 1984
RDD:85:5097-01:01	TMI-2 H8A Core Debris Sample Examination Final Report	Issued July 1984
EGG-TMI-6697	TMI-2 Core Debris--Cesium/Settling Test--Draft Report	Issued September 1984
Letter Report Hmb-268-84	Analysis of TMI-2 'A' Steam Generator Hot Leg Resistance Thermal Detector	Transmitted November 16, 1984
GEND-INF-060 EGG-TMI-6630 (Draft)	Preliminary Report: TMI-2 Core Debris Grab Samples--Analysis of First Group of Samples	Issued July 1985
GEND-INF-052 EGG-TMI-6685 (Draft)	Examination of H8 and B8 Leadscrews from Three Mile Island Unit 2 (TMI-2)	Issued September 1985
GEND-INF-067	Examination of the Leadscrew Support Tube from Three Mile Island Reactor Unit 2	Issued March 1986
GEND-INF-075 Parts 1 and 2 EGG-TMI-6853 (Draft)	TMI-2 Core Debris Grab Samples--Examination and Analysis	Issued September 1986
EGG-TMI-7385 Revision 1	TMI-2 Core Bore Acquisition Summary Report	Issued February 1987
GEND-INF-074	TMI-2 Core Cavity Sides and Floor Examinations December 6, 7, 21 and 22, 1985	Issued February 1987
GEND-INF-084	Examination of Debris from the Lower Reactor Head of the TMI-2 Reactor	Draft Issued April 1987
EGG-TMI-7429	TMI-2 Lower Plenum Video Data Summary	Published July 1987
GEND-INF-082	Examination of the TMI-2 Core Distinct Components	Published September 1987

Report Number	Title	Status
GEND-INF-087	TMI-2 Standing Fuel Rod Segment Preliminary Examination Report	Published August 1987
GEND-INF-083	TMI-2 Core Horseshoe Ring Examinations	Published October 1987

3.3.3 Reactor Vessel Internals Sample Examination Findings

The results of the sample examinations conducted to date are summarized in this section.

3.3.3.1 Core Debris Grab Samples. Examination and analysis of the 11 upper core loose debris grab samples and probing the loose debris provided the following TMI-2 accident information:

- Some particles exceeded UO_2 melting (3100 K) during the accident.
- Loose debris extends downward about 2.5 ft to a hard object 6 ft above the original core bottom and outward to at least the next-to-outside ring of fuel assemblies (approximately 20% of the core volume).
- The hard-object upper surface is relatively flat but irregular and extends to near the core periphery.
- Significant axial and radial mixing of core materials has occurred in the loose debris bed.
- The core material distribution in the loose debris indicates a depletion of structural and poison materials of lower melting temperature.

- Fission product retention normalized to the measured uranium concentration is as follows:

Isotope	Abundance (%)
Sr-90	79 to 102
Ru-106	35 to 86
Sb-125	18 to 38
I-129	10 to 28
Cs-137	6 to 32
Cr-144	90 to 130

3.3.3.2 Reactor Vessel Internals Documentation. This examination task commenced in 1982 and includes periodic surveys with CCTV and sonar (acoustic topography) devices. The findings to date include the following:

- The core topography data taken before head removal indicate that the void in the core region below the upper grid plate occupied 330 ft^3 (9.3 m^3) and extended radially into the peripheral row of fuel assemblies. Local variations in the nominal void radius ranged from exposed sections of core baffle plate to apparent standing fuel rods 12 to 14 in. inside the core boundary. Significant quantities of core materials were suspended from the underside of the upper core support grid (1982 and 1983).

- Ablation of the plenum assembly lower grid plate occurred in two or more mid-radius areas, as shown in Figure 11 (1985).

- Downcomer and peripheral lower CSA structures appear to be undamaged (1985).

- Ten to twenty tons of probable core material collected in the region between the RV lower head and the flow distributor, ranging in form from coffee-ground-sized particles to a wall like a vertical curtain appearing like lava rock (1985).

- Previously molten material was hanging or attached to the flow distributor below core positions L2, L14, and N3 (1985).

- Regions of flow channel blockage from fuel rod swelling were not observed in any regions of the still-standing fuel bundles (1985).

- Increased upper end fitting damage had occurred at fuel assemblies with burnable poison (Al_2O_3-B_4C) rods (1985).

- Still-standing fuel rod regions had regions of zircaloy interaction with steam (embrittlement), uranium dioxide (liquefaction), and stainless steel and Inconel (eutectics) (1985).

- Fuel assemblies were loaded into the TMI-2 core with identification markings oriented to the south instead of the north and without orifice rod assemblies in peripheral fuel assemblies except at startup neutron source sites (core positions B12 and P4).

- Loose debris removal from the core cavity floor exposed a horseshoe-shaped ring of agglomerated (cemented-together rod bundle remnants) core material projecting inwards from the standing fuel rods above the hard-crust surface, as shown in Figure 14. The ring extends from around the 100-in. elevation above the core bottom to the hard crust, where it recedes, creating a cave-like geometry (1986).

- A region of previously molten core materials estimated to be approximately 122 ft^3 (about 10% of the original core volume) was confirmed to be in the lower, central region of the core. This solid structure is approximately 4-ft thick in the center of the core, 1- to 2-ft thick near the core periphery, and is roughly shaped like a bowl extending down toward the bottom of the core. Intact rod stubs exist from the bottom of the core up

to the previously molten ceramic material. At several core-bore locations, metallic inclusions appear in the upper portion of the solid, previously molten material; while in others, metallic inclusions are observed near the center and/or bottom of the previously molten regions. The shapes of the metallic inclusions vary widely (1986).

- The primary migration path of the previously molten material into the lower plenum appears to be through the baffle plates on the east side of the core at assemblies P-5 and R-6, around and through the compartment between the baffle plates and core barrel, through the flow holes in the lower grid below the core barrel assembly compartment (CBAC), at several locations, and through the CSA, primarily below core positions P5 and R6 (1986, 1987).

- The CSA appears to be undamaged in those areas where previously molten ceramic materials have frozen in place between the CSA structural members. However, one core instrument guide tube is damaged near the lower flow distributor plate, two others are missing or covered by solidified core material below the lower grid, the lower end of the guide tube below core position R7 is ablated, and the guide tubes below core positions R7, P6, and O10 have possible "high-water" marks and/or surface deposits from interaction with molten core material underneath the flow distributor (1986 and 1987).

- The fuel debris resting on the bottom vessel head near the center of the RV appears to be loose and relatively fine as compared with the larger agglomerated debris existing near the edge of the RV in the lower plenum. The depth of bottom vessel head fuel debris was estimated (1986) to be as follows:

Core Position	Depth[a] (in.)
D4	18
K9	30
N12	12

a. Depth measured after boring with possible overlay of boring debris.

- Veins of solidified core material have penetrated downward through the rod bundle to within 2 in. from the bottom spacer grid at the intersection of core positions G8 and F9, within 30 in. of the fuel rod bottoms at core position H15, and to the lower grid at core positions L14 and M14 (1987).

- Spacer grid elevations are locations for increased damage to the rod bundles and interaction with the baffle plates (1985).

- Solidified core material occurs between the baffle plates and lower grid at core positions L15, K15, and H15, but not at core positions G15 and F15. This indicates the possibility of (a) east-to-west flow of molten core material in the CBAC north area, and (b) complete east-to-west crossflow in the CBAC north area above one of the former plate partitions, since solidified core material has been observed underneath the CBAC below the intersection of core positions C13 and D14.

- The location of interfaces of solidified core material regions with the rod bundles and baffle plates at core position M14 indicates that molten core material may have penetrated into the rod bundle from the baffle plate.

- The average length of the lower ends (stubs) of K8 and K9 is equivalent to the lower end fitting length.

- The K8 lower end fitting has an off-center hole through it that is approximately 4 in. diameter, with some possible previously molten core material around the upper edge of the hole.

- Many of the full-length fuel rods do not appear to have ruptured or swollen cladding, indicating that the zircaloy cladding swelling and rupture event from internal gas pressure that is normally associated with loss-of-coolant accident events was delayed or suppressed in the TMI-2 accident. The delay may have been sufficient to cause cladding perforation to occur by spacer grid (Inconel) and cladding (zircaloy) interaction.

3.3.3.3 Control Rod Leadscrew and Leadscrew Support Tube Examinations. The principal findings of the leadscrew and leadscrew support tube examinations were:

- Less than 2% of any core radionuclide or material was deposited on metal surfaces in the plenum assembly, with the deposited core material depleted of control rod poison material.

- Upper plenum metal temperatures did not exceed the melting point (1700 K).

- Upper plenum metal temperatures ranged from 1255 K at the upper plenum inlet (center) to 755 K near the outlet.

- Surface deposits on the leadscrew support tube consist of a highly adherent inner layer and loosely adherent outer layer with a concentration of control rod poison material deposited on the highly adherent inner layer.

3.3.3.4 Reactor Vessel Lower Head Loose Debris. The principal findings of the RV lower head loose debris preliminary examinations are as follows:

- The material is inhomogeneous, porous, and cracked, with an average density of 7.2 g/cm^3.

- Elemental composition includes uranium (.7), zirconium (.2), iron, aluminum, chromium, nickel, and silicon.

- Iron, aluminum, chromium, and nickel inclusions occur at grain boundaries.

- Radioactivity concentrations occur at pore locations.

- Fission product retention normalized to the measured uranium concentration is as follows:

Isotope	Abundance (%)
Cs-137	9 to 22
I-129	0.6 to 8
Sb-125	3 to 10
Ru-106	4 to 9
Ce-144	106 to 124

3.3.3.5 Core Distinct Component Examination. The examination of the TMI-2 core distinct components was completed in FY-1987 and included segments of fuel rods, control rod guide tubes, and fuel assembly upper end fittings (upper end boxes, spiders and BPR retainers). Preliminary findings include the following:

- A large temperature gradient existed at the core top.

- Fuel assemblies were loaded into the TMI-2 core with identification markings oriented to the south instead of north.

- Orifice rod assemblies were not loaded into the TMI-2 peripheral fuel assemblies except at start-up neutron source sites (core positions P4 and B13).

- Fuel rod upper plenums include spacer sleeves between the spring and pellet stack (instead of ZrO_2 washers) and the spring and fuel rod upper end cap.

- Silver-indium-cadmium poison material relocated upwards inside the control rods into the holddown spring region while molten, indicating possible control rod cladding collapse and core exit peak temperatures during the core heatup phase.

- The silver-indium-cadmium poison material, although previously molten (above the cadmium atmospheric pressure boiling point), retained its original elemental composition.

- Insignificant quantities of fission products or core materials were permanently adhered to the surfaces of fuel rods, control rods, or guide tubes

3.3.3.6 Core Bore Examinations. The examination of the core bores commenced in September 1986, and preliminary findings are as follows:

- All four small-diameter (1.45 in.), lower-plenum core bore tubes were empty, providing additional indication that the RV lower head core debris is like loose rock in form where the core boring penetrated.

- The core region core boring partially recovered core material, as summarized in Table 10. Table 10 also includes the core material stratification estimates derived from the core-boring parameters and the video survey records. At most core positions, the boring was sufficiently offset from the fuel assembly centerline to capture samples of the control or burnable poison rods in the 2.4-in. diameter bore. The loss of core material from the core bores provides an indication that the ceramic and agglomerated core material regions are frangible by milling-type tools.

TABLE 10. TMI-2 CORE BORE ACQUISITION SUMMARY--PRELIMINARY

Stratification Summary[a,b,c] (inches from fuel rod bottom): scale 0, 10, 20, 30, 40, 50, 60, 70, 80

Regions: Lower End Fitting; Rod Bundle Region; Transition Region; Ceramic Region; Agglomerate Region

Core Position	Weight (lb)	Stratification Summary	Material Recovered
		EEEERRRRRRRRRRRRRRRRRRRRRRRRRRRRRRRRRRTTTTTTTTTCCCCCCCCCCCCCCCCCCCCCCCCCCCCCCCCCAAAAAAAAAAA	
D4 (CR)	42	EEEERRRRRRRRRRRRRRRRRRRRRRRRRRRRRRRRRRRRRRRRRRRRRRRRRRRRRRAAAAAAAAAAAAAAAAA	2-in. long core; 13 fuel rods, 1 CR/GT, 1 IT; 6 rocks and some small particles[d]
D8 (CR)	40	EEEERRRRRRRRRRRRRRRRRRRRRRRRRRRRRRRRRRRRRRRRRRRRRRRRRRRRRRRRRRRRRRRRAAAAA	6 Fuel Rods, 2 CR/GT, 1 IT; 3 2 to 3 in. lg. cores, 4 rocks and some small particles[d]
G8 (BPR)	28	EEEERRRRRRRRRRRRRRRRRRRRRRRRRRRTTTCCCCCCCCCCCCCCCCCCCCCCCCCCCCCCCCCAAAAAAA	13 fuel rods 1 BPR/GT, 1 IT; 15 rocks and some small particles[d]; 4 in. lg. core with embedded metallic
G12 (BPR)	35	EEEERRRRRRRRRRRRRRRRRRRRRRRRRRRRRRRRRRRRRRRRRRRRRRRRRRRRRRTTTCCCCCCCCCCCCCCCCCCCCCAAAAAAAAA	13 fuel rods, 2 BPR/GT, 1 IT; 29 rocks and some small particles 2 in. lg. core of ceramic
K6 (BPR)	0.1	EEEERRRRRRRRRRRRRRRRRRRRRRRRRRRRTTTTTTTCCCCCCCCCCCCCCCCCCCCCCCCCCCCCCCCCCCCCCCCCCCCCC	1 6-in. fuel rod section
K9 (CR)	24	EEEERRRRRRRRRRRRRRRRRRRRRRTTTTTCCCCCCCCCCCCCCCCCCCCCCCCCCCCCCCCCCCCCCCCCCCCCCCCCCCCAAAAAAAA	11 fuel rods, 2 CR/GT, 1 IT; 4 in. core; 28 rocks and some small particles[d]; 2.5 in. core
N5 (BPR)	37.5	EEEERRRRRRRRRRRRRRRRRRRRRRRRRRRRRRRRRRRRRRRRRRRRRRRRRRRRRRRRAAAAAAAAAAAAAAAAAAAAAAA	12 fuel rods, 1 BPR/GT, 1 IT; 8 rocks and some small particles[d]
N12 (CR)	30	EEEERRRRRRRRRRRRRRRRRRRRRRRRRRRRRRRRRRRRRRRRRRRRRRRRRRRRRRAAAAAAAAAAAAAAAAAAAAA	11 fuel rods, 1 CR/GT, 1 IT; 2 rocks and some small particles[d]
O7 (CR)	23.5	EEEERRRRRRRRRRRRRRRRRRRRRRRRRRRRRRRRRRRRRRRRRRRRRRRRRRRRAAAAAAAAAAAAAAAAAAAAA	7 fuel rods, 1 CR/GT, 1 IT; 2 in. lg. core, 7 rocks and some small particles[d]
O9 (CR)	27.25	EEEERRRRRRRRRRRRRRRRARRRRRRRRRRRRRRRRRRRRRRRRRRRRRRRRRRRRRRRAAAAAAAAAAAAAAAAAAA	11 fuel rods, 2 CR/GT, 1 IT; Two metallic appearing rocks and some small particles[d]

a. Stratification estimates from EGG-TMI-7315 (boring parameters and video survey records).

b. Underline identifies where material was recovered by core bores.

c. One type space equals 1 in.

d. Including possible fuel pellet fragments.

- The average density for 34 of the rocks was 7.7 g/cm^3, with density extremes of 5.4 and 9.4 g/cm^3, compared with the eight 2.4-in.-diameter cores that have an average density of 7.9 g/cm^3, with density extremes of 6.8 and 9.7 g/cm^3. The higher density, previously molten core material appears to correlate to regions where undissolved fuel pellets are cemented together by previously molten core material which is frequently metallic appearing.

- Upper crust:

  - The crust consists of previously molten ceramics $(U,Zr)O_2$ and metallics (silver, indium iron, chromium, nickel, and tin) and solid UO_2 particles

  - Metallics contain much silver and indium; cadmium was not detected.

  - Peak temperature of previously molten ceramic was at least 2800 K.

  - Ruthenium and antimony were retained in metallics.

  - Ruthenium and technetium were associated with metallic nickel and tin.

- Ceramic:

  - Ceramic material containing fuel appears to have similar composition and structure throughout the consolidated region.

  - Elemental composition of a representative sample of the consolidated region of ceramic material is as follows:

Element	Wt.%
Uranium	56
Zirconium	21
Iron	1
Chromium	1
Nickel	1
Oxygen	20
Cadmium	not detected

- Inclusions of oxidized structural materials and aluminum are contained in previously molten ceramic.

- Inclusion of silver and indium occur in a matrix of iron and nickel.

- Peak temperature was at least 2800 K.

o Lower crust (transition region):

- Crust consisted of UO_2 pellets and small, solid UO_2 particles surrounded by previously molten structural cladding and control materials.

- Cadmium was detected in the metallics.

- Peak temperature of material was between 1400 and 2200 K.

- Fission products were retained primarily in the fuel pellets.

- Ruthenium and technetium were associated with metallic nickel and tin.

o Rod bundle region:

- Peak temperature was below 1100 K.

- There were no significant material interactions.

- Solidified core material was discovered in the instrumentation tube from core position G8 at 2 in. from the lower end, indicating a possible escape path for molten core material.

3.3.3.7 Miscellaneous Core Material Sample Examinations. Samples were sorted, weighed, photographed, and characterized for density. The sample collection included the following:

o 1 rock-size sample retrieved from the RV lower plenum in December 1985.

o 28 rock-size samples retrieved from near core positions F6, H8, and M11 in January 1987 (after overlapping hole drilling).

o 20 rock-size samples retrieved from near core positions H9 and K9 in March 1987.

Preliminary results of the density measurements are as follows:

Sample Description	Density (g/cc)		
	Average	High	Low
Fused-together core material from core position M11 (large rock material)	7.63	8.44	7.28
Fused-together core material from core position F6 (fuel canister D-174)	7.45	7.72	7.27
Fused-together core material from core position F6 and H8 (fuel canister D-174	7.47	8.53	6.51
Fused-together core material from core position H9/K9 (CNS 1-13C cask)	7.63	8.09	7.00

Sample Description	Density (g/cc) Average	High	Low
Rock (K9-P4-A) section from core position K9 core bore	7.13	NA	NA
Core debris (3 particles) from lower vessel (originally one piece)	7.72	8.05	7.43

The density measurements are similar to the density of samples retrieved previously from the core and lower RV.

Preliminary examination of the enlarged photographs indicates that most of the samples are specimens of ceramic-appearing corium with no evidence of undissolved fuel pellets or veins of metallic material. This observation is also true for the pieces from the large rock from the lower basket of fuel canister D-174.

3.3.3.8 Core Sample Examination Support. The initial work in this task during FY-1987 produced the following preliminary findings:

- Fission gas retention in the previously molten region of the core was much lower than in the fuel pellets that remained in the standing rod bundle regions.

- The potentiometric titration method for measuring oxygen abundance was developed and calibrated with nonradioactive urania and zirconia standards.

- The automated gamma tomography measurement equipment was produced, assembled, and calibrated using small cobalt-emitter wires.

3.4 Detailed Work Plan

The RV SA&E work plan details for FY-1988 are contained in the following work packages:

Work Package Number	Work Package Title
751421300	RCS Equipment/Building Characterization
755420600	Core Stratification Sample Examination
755421600	TMI-2 Lower Vessel Debris Examination
755422100	Core Sample Examination Support

Table 11 summarizes the in situ measurements and sample examinations that are involved in this work plan. The Table includes the AEP-designated sample priority (1-20), the quantity of in situ measurements or samples, the TMI-2 accident information expected from the examinations, and the examination techniques, which will be used to obtain the information.

As the TMI-2 defueling program progresses, it is expected that "samples of opportunity" will present themselves. Acquisition of these serendipitous samples and occurrence of unexpected observations during sample examination may modify the currently planned work scope documented herein. The work package format used in the work plan will accommodate such modifications as they occur.

Also included in this work plan are four tasks for improved examination methods development, as follows:

Task Title	Purpose
ORIGEN benchmarking	Confirm accuracy of ORIGEN prediction of uranium utilization and conversion by comparing measured TMI-2 fuel values to code predictions.

TABLE 11. REACTOR VESSEL IN SITU MEASUREMENT AND SAMPLE ACQUISITION AND EXAMINATION PLAN SUMMARY

Measurement/Sample Description	Priority[a]	Sample Quantity	TMI 2 Accident Information	Examination Methods[b]
1. Loose debris:			All:	
			Color, surface texture, weight, radioactivity	2, 3, 5
a. Large volume sample from upper debris bed	3	5	Particle size, density and distribution (transport ability)	4, 5, 6
b. Single particle samples from lower head debris	7	8	Metal structure, grain size, core metal and oxygen distribution, peak temperature	10
c. Large volume samples from lower head region	6	2	Core metal abundance, including U-235	14, 16
			Retained fission product abundance and distribution	18, 19, 20, 21, 13
2. In situ data recordings:				
a. Core cavity video survey after bulk defueling	--	N/A	Core former and CSA damage, presence of core material outside the core boundary	1
b. Video survey of lower plenum after loose core debris removal	2	N/A	CSA, core instrument guides and RV lower head damage, presence of core material fused to CSA, guides, or vessel lower head	1
3. Core bore samples:	1, 5, 9	9	Weight, sample location, and particle color, shape, size, surface texture, and quantity	3, 5
a. 2 4-in.-diameter cores	1, 5, 9	8	Weight, color, shape, size, surface texture, density	3, 5, 6
			Metal structure, grain size, core metal and oxygen distribution, peak temperature	10
			Core metal abundance and chemical form	14, 17
			Uranium enrichment	16
			Retained fission product abundance and distribution	18, 19, 20, 21, 13
b. Rock-size (>1 in. in any direction) pieces of previously molten material	1, 5, 9	101	Weight, color, shape, size, surface texture, density	3, 5, 6
			Metal structure, grain size, core metal and oxygen distribution, peak temperature	10
			Core metal abundance and chemical form	14, 17
			Uranium enrichment	16
			Retained fission product abundance and distribution	18, 19, 20, 21, 13
c. 4-in.-long fuel rod segments	8	98	Metal structure, grain size, and interaction with other metals and chemicals, peak temperature	10
			Retained fission product abundance and distribution	18, 19, 20, 21, 13
d. 4-in.-long control rod/guide tube segments	8	7	Metal structure, grain size, interaction with other metals and chemicals, peak temperature	10
			Poison material alloy depletion	14
			Captured fission product abundance and distribution	18, 19, 20, 21, 13
e. 4-in.-long burnable poison rod/guide tube segments	8	6 Al_2O_3-B_4C	Metal structure, grain size, interaction with other metals and chemicals, peak temperature	10
			Captured fission product abundance and distribution	18, 19, 20, 21, 13
f. 4-in.-long instrument tube sections	8	8	Metal structure and grain size, interaction with other metals and chemicals, peak temperature	10
			Captured fission product abundance and distribution	18, 19, 20, 21, 13

TABLE 11. (continued)

a. Priority values 1 through 20 are listed in Table 3.

b. Examination methods:

1. Video surveys with electronically enhanced still image production
2. Ion-chamber gamma detection
3. Color and/or black and white photography
4. Sieving
5. Balance weighing
6. Immersion density
7. Gamma spectrometry scanning
8. Neutron radiography
9. Autoradiography
10. Metallography with scanning electron microscopy or Auger spectrometry
11. Rockwell hardness
12. Compression strength
13. Microgamma scanning
14. Inductively coupled plasma emission spectrometry
15. Spark source mass spectrometry
16. Delayed neutron radiochemistry
17. Bulk oxygen analysis
18. Gamma spectrometry
19. I-129 radiochemistry
20. Sr-90 radiochemistry
21. Kr-85 radiochemistry

Task Title	Purpose
Bulk oxygen content	Develop a potentiometric titration method for measuring the oxygen abundance in metal-bearing samples for improved determination of the core metals chemical forms.
Fission gas analysis	Develop INEL capability for measuring Kr-85 abundance in ceramic core materials using a known method.
Gamma spectrometry microscanner	Develop INEL capability for measuring gamma ray emitter distribution on a microscale for comparison to SEM measurements of core metal distribution and possible clues to fission product chemical form.

3.4.1 Product

The product of the RV SA&E work plan in FY-1988 and beyond is as follows:

Work Package Number	Product Item	Target Completion Date
751421300	Lower CSA samples	September 1988
	RV lower head loose debris samples	September 1988
755420600	Core bore gamma scanning draft report	December 1987
	Core bore sample examination report: draft	August 1988
	final	1989
755422100	ORIGEN2 code assessment report	January 1988
	Revised subsurface debris bed sample examination report	February 1988
	Sample oxidation state analysis report	September 1988
	Sample microgamma scanning analysis report	September 1988

3.5 Synopsis

The exploration of the RV internals was almost completed in FY-1987. The core apparently reconfigured into four zones; the original rod-bundle-and-end-fitting geometry (42% by weight); a large (26% by volume) cavity in the upper core region; loose debris (unmelted and previously molten core material) mixture (23% by weight); and previously molten core material (35% by weight). An estimated 46% of the previously molten core material relocated from the core boundaries into the RV lower plenum.

The few RV regions not yet explored may contain important core damage progression data, such as:

- The locations of all actual escape pathways of the molten core material from the core region.
- The condition of previously molten core material solidified in the core barrel assembly and lower CSA before reaching the RV lower head region.
- The condition of previously molten core material now solidified underneath the flow distributor on the RV lower head.
- The dimensions and composition of solid, possibly nonfuel, core material predicted to be resting on the RV lower head central region.

The AEP-requested (see Table 3) SA&E tasks that cannot be satisfied for either physical or budgetary reasons include the following:

AEP Priority	Task	Reasons
2	Central core bore between the CSA and lower head	Unfused material could not be collected with the core bore
8	Intact, part-length (upper end) burnable poison rod assembly	Identification marking removed during defueling
13	Samples of the interaction zone between core materials and the lower CSA	Insufficient budget
15	Samples of the interaction zone between the RV lower head surface and the core materials	Insufficient budget
16	Samples of the interaction zone between core materials and the baffle plates	Insufficient budget
17	Fission products retained on upper plenum surfaces	Insufficient budget
18	Control rod leadscrews from the upper plenum region	Insufficient budget
19	Fuel assembly upper end fitting examinations	Insufficient budget

The current strategy concerning the unsatisfied items above is to take special actions, as necessary, to acquire the samples that might be destroyed or altered by the TMI-2 defueling activities.

The SA&E plan described herein is intended to provide sufficient data to adequately describe the TMI-2 accident scenario. In addition, special efforts are being made to determine the fission product chemical form by developing improved techniques for measuring bulk oxygen abundance and microdistribution of gamma emitters.

4. REACTOR COOLANT SYSTEM SAMPLE ACQUISITION AND EXAMINATION WORK PLAN

4.1 Introduction

The TMI-2 RCS piping and components are shown in Figure 21 and include the following:

- A RV containing the uranium fueled core. This is covered by a separate SA&E work plan described in Section 3.

- Dual reactor cooling loops (A and B), consisting of the candy-cane-shaped hot legs from the RV upper plenum to the steam generator tops, two single-pass type steam generators (Figure 22), and dual (four total) cold legs from the steam generator bottom back to the RV via the four reactor coolant pumps.

- A pressurizer (Figure 23) connected to the cooling loops by a surge line from the A-loop hot leg to the pressurizer bottom and a spray line from the A-loop cold leg (downstream of pump RC-P-2A) to the pressurizer top.

- Dual core flooded tanks connected to the RV.

During and after the TMI-2 accident sequence that lasted until natural circulation cooling commenced (approximately 30 days after accident initiation), many events occurred that affected the character and distribution of core materials and fission products that escaped from the RV to the RCS. The most significant events include the following:

- Fission product and a small uranium fraction release began in the RV at approximately 138 min after accident initiation when fuel rod rupture commenced. Reactor coolant pump operation had ceased, and the available escape paths were:

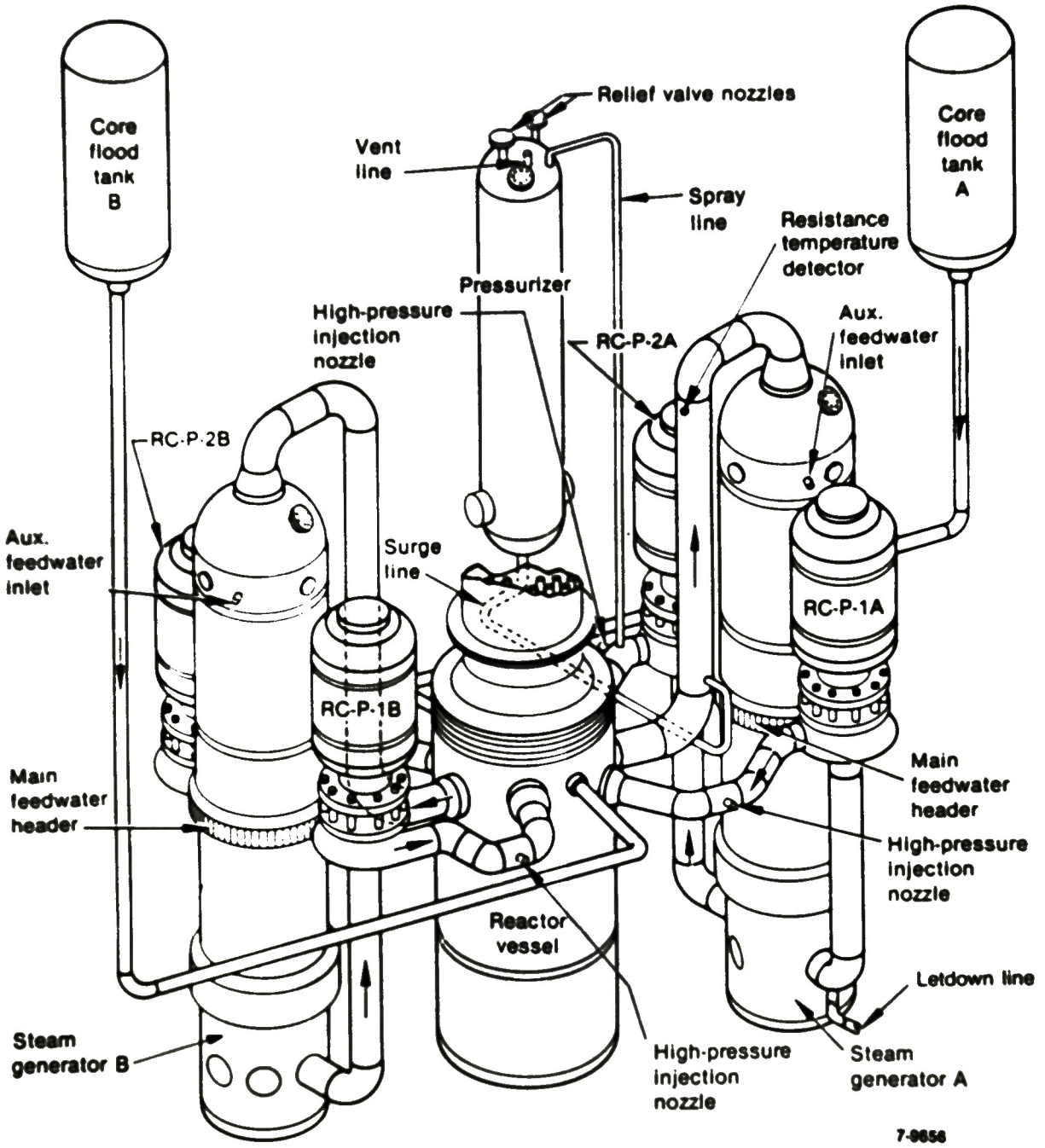

Figure 21. TMI-2 reactor coolant system piping and components.

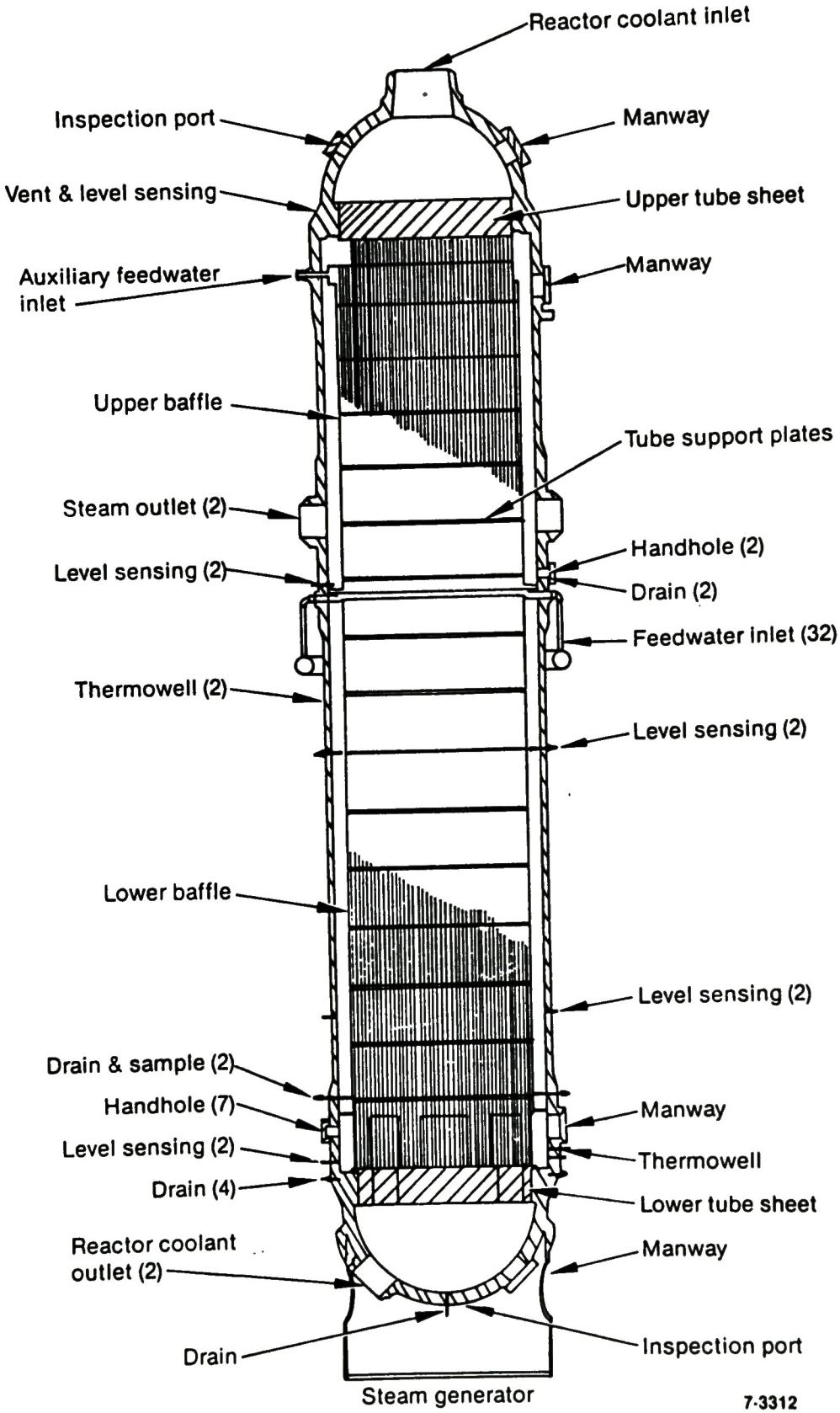

Figure 22. TMI-2 steam generator diagram.

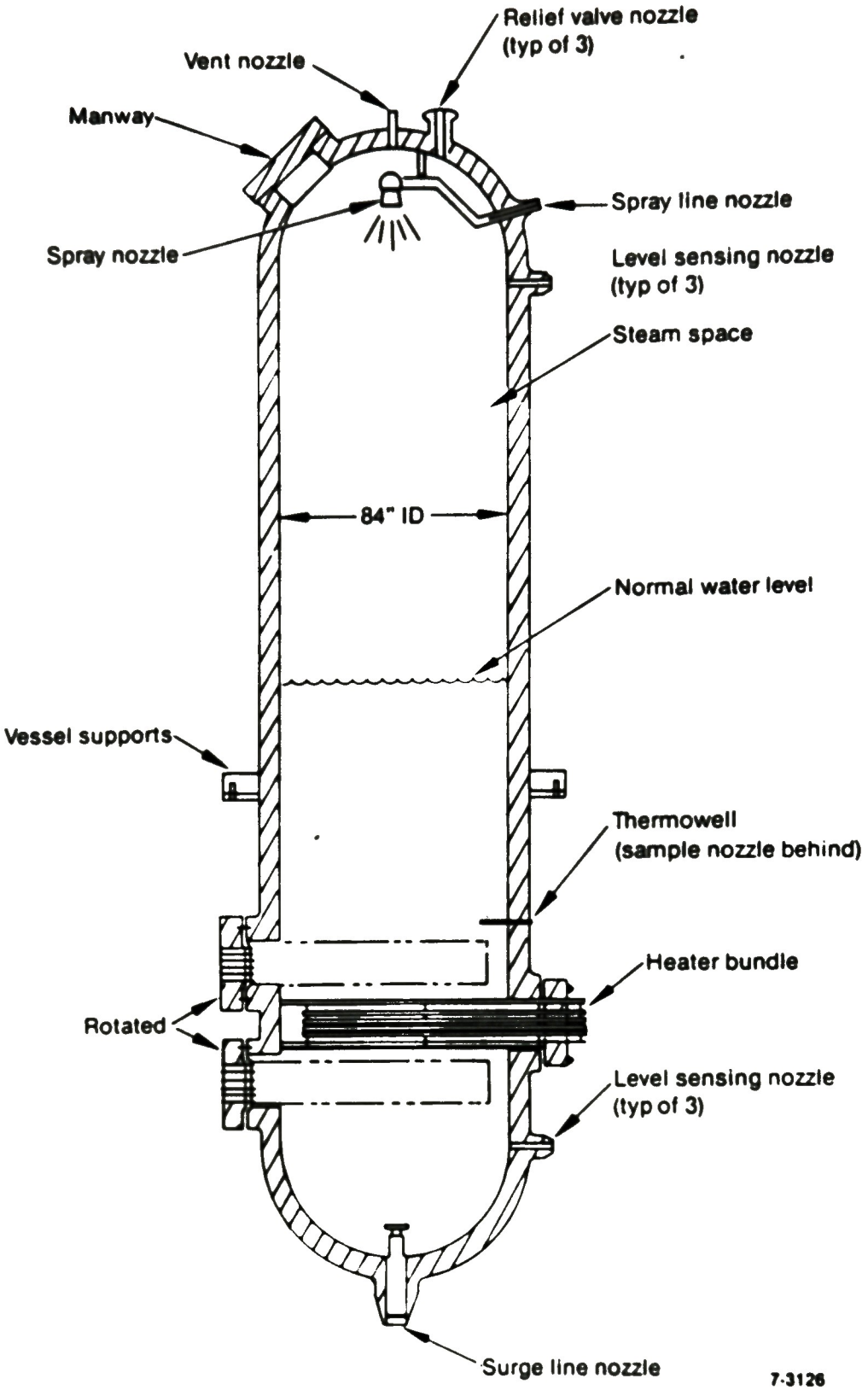

Figure 23. TMI-2 pressurizer layout.

- Through the A-loop hot leg, the surge line, and the pressurizer because the pilot operated relief valve (PORV) was stuck open, releasing reactor coolant to the reactor basement through the reactor coolant drain tank, and

- Through the A-loop cold leg to the letdown line (upstream of reactor coolant pump RCP-P-1A).

o RCS temperatures exceeded the coolant saturation temperature from 136 min to approximately 16 h after accident initiation in the hot legs and occasionally in the cold legs. Measured coolant temperatures did not exceed 725 K.

o The PORV/pressurizer escape path was closed at 142 min after accident initiation.

o Zircaloy-steam reaction became significant at 144 min, releasing hydrogen and other chemical reaction products into the coolant in the RV. Core material temperatures continued to rise and reached temperatures exceeding 3100 K, which could (a) generate aerosols from low-volatility materials and chemical reactions, and (b) accelerate the escape of fission products from the uranium dioxide.

o A reactor coolant sample taken at 163 min contained 140 μCi/mL gross activity.

o Reactor coolant pump RC-P-2B was energized from 174 to 192 min after accident initiation. This event is believed to have reflooded the overheated core region, fragmenting most of the standing fuel in the upper core region and creating the upper core region cavity, and causing circulation of core material particles and fission products throughout the B-loop components.

o The PORV/pressurizer escape path was reopened from 192 to 197 min and from 220 to 318 min.

- At 227 min, a significant relocation of core material from the core region into the flooded RV lower plenum region occurred, which would likely increase the escape of core material and fission products to the letdown system escape path.

- A sustained high-pressure injection period commenced at 267 min and continued to 544 min.

- A reactor coolant sample taken at 283 min contained >500 μCi/mL gross activity.

- The PORV/pressurizer escape path was cycled open repeatedly during the 340-to-458-min period to prevent RCS overpressurization and was also opened from 458 to 550, 565 to 589, 600 to 668, 756 to 767, and 772 to 780 min to depressurize the RCS for core flood injection.

- Core flood tank injection probably occurred from 511 to 550 min after accident initiation. This event is believed to have caused a back flow leak path to develop from the RCS to flood tank B due to incomplete check valve reseating.

- A RCS pressurization in the 840-to-900-min period probably forced coolant and core material aerosols and volatile fission products from the RV into flood tank B.

- Forced circulation cooling of the reactor was resumed at 949 min (15 h 49 min) through the A-loop with reactor coolant pump RC-P-1A.

- Letdown flow was lost from 18 h 34 min to 26 h 30 min.

- A reactor coolant sample taken at 36 h 15 min measured >1000 R/h on contact.

- Natural circulation cooling of the reactor commenced 30 days and 10 h after accident initiation.

- Reactor coolant water cleanup using the SDS/EPICOR-II system commenced 2 years and 106 days (7/12/81) after the accident.

The RCS is currently liquid-filled to the 327-ft elevation, which leaves the pressurizer and steam generator upper regions exposed to air. Prior to the liquid drawdown for defueling, inadvertent injection of water with colloidal suspensions of ferrous oxide, high pH, and river water pollutants introduced additional contamination into the RCS and probably caused increased buildup of surface and loose deposits inside the RCS. During FY-1986, spillage of hydraulic fluid into the RV provided sufficient nourishment to establish a microorganism community in the RCS, which increased water turbidity to eliminate observation of submerged objects and created concerns for microbiologically influenced corrosion. Since April 1986, periodic treatment of the RCS water with hydrogen peroxide to kill the microorganisms and water solution filtering and replacement has occurred to control the microorganism community.

During FY-1987, video surveys were made in the following RCS regions:

- The four (1A, 1B, 2A, and 2B) cold legs between the RV and the 45-degree (upwards) pipe run to the pumps.

- The B-loop hot leg between the RV and vertical (upwards) pipe run to the steam generator.

- The vertical decay heat line between the B-loop hot leg and the loose debris filling the pipe (approximately 17 ft).

Observations included:

- The cold leg loose debris includes silt and flake-like particles.

- The hot leg loose debris includes silt and possibly some short rod or tube sections and pea-size particles.

4.2 Purpose

The purpose of the RCS SA&E work is to retrieve and examine RCS adherent-surface and loose deposit samples. The examination objectives are to determine the abundance, distribution, chemical form, and bonding characteristics of fission products and core materials deposited in the RCS and the extent to which the RCS can be decontaminated.

4.3 Accomplishments

4.3.1 Acquisition

4.3.1.1 Tooling. The RCS sample acquisition program has produced the following equipment:

Drawing/Report Number	Description/Title	Status
TBD	Germanium-crystal gamma spectrometer system, including computer software and point, pipe, and plane calibration sources (C. V. McIsaac, Three Mile Island Nuclear Station Unit-2 Operating Procedure for the EG&G Mobile Gamma Ray Spectrometer System -Draft)	Complete
TBD	Sodium-iodide-crystal portable gamma spectrometer system, including a Davidson Model 4106 multi-channel analyzer and excluding the crystal detector proper	Complete

4.3.1.2 Samples. The RCS sample acquisition program has furnished the samples listed in Appendix D, Section B. Samples that were received at the INEL in FY-1987 include the following:

TMI-2 Location	Sample Description	Date Acquired
Steam generator A upper head	Stainless steel handhole cover liner with 6-in.-diameter exposed surface area	March 1986
	Two particles (8.0 and 0.6 g) from the top of the tube sheet	March 1986

4.3.1.3 CCTV Survey Recordings. The following videocassette recordings of RCS internal CCTV surveys have been acquired from GPU Nuclear:

Date	Object Surveyed (Tape Title)	Tape Number	Data Duration (min)
12/17/85	Pressurizer Heater Bundles Upper Bundle Grit	17	5
	Pressurizer Characterization--Entry 763 Tape 1	18	62
	Pressurizer Characterization--Entry 763 Tape 2	19	39
03/XX/86	TMI OTSG Examinations	73	10
02/17/87	Reactor Coolant System Cold Leg 1B--Tape 1 of 11	210	60
02/17/87	Reactor Coolant System Cold Leg 2A--Tape 3 of 11	212	61
02/18/87	Reactor Coolant System Cold Leg 2A--Tape 5 of 11	214	46
02/18/87	Reactor Coolant System Cold Leg 1A--Tape 7 of 11	218	60
02/18/87	Reactor Coolant System Cold Leg 1A--Tape 8 of 11	217	45
02/18/87	Reactor Coolant System Cold Legs 1A and 2B--Tape 10 of 11	219	62
02/18/87	Reactor Coolant System Cold Leg 2B--Tape 11 of 11	220	61
02/19/87	Reactor Coolant System B-Loop Hot Leg and Decay Heat Line--Tape 1 of 3	231	62

Date	Object Surveyed (Tape Title)	Tape Number	Data Duration (min)
02/19/87	Reactor Coolant System B-Loop Hot Leg and Decay Heat Line--Tape 2 of 3	232	62
02/19/87	Reactor Coolant System B-Loop Hot Leg - Tape 3 of 3	233	38

4.3.2 Examination

The RCS examination program has produced the following reports:

Report Number	Title	Status
H. M. Burton ltr to G. R. Eldam Hmb-268-84	Transmittal of Draft Report Analysis of TMI-2 'A' Steam Generator Hot Leg Resistance Thermal Detector	Transmitted November 1984
EG&G Reactor Physics Branch ltr SCT-08-85	TMI Gamma Spectral Data From Primary System Scanning Measurements	Completed September 1985
GEND-INF-080	TMI-2 RCS Manway Cover Backing. Plates Surface Deposit Examinations	Completed September 1987
B. F. Saffell (BCD) letter to M. L. Russell	Nondestructive Examination of Handhole Cover Liner	Transmitted August 1987

RCS examination activities performed by others have produced many other reports, which are listed in Appendix A.

4.3.3 Findings

4.3.3.1 Video Surveys. The video surveys, in combination with borescope examinations, loose deposit sample collection, and sample examinations, have resulted in the following estimate of the types and amounts of loose deposits in the RCS:

- **A loop**:

  - Hot leg--not surveyed

  - Steam generator--0.5 to 1.0 L of solids on the upper tube sheet, including some pieces longer than 2 cm with low ($5 g/cm^3$) density. Ten liters of silt in the lower head.

  - Cold legs and pumps--60 L of silt (<5 μm particle size) and flake-like particles.

- **B loop**:

  - Hot leg--25.2 L of silt (<5 μm particle size) and small core material fragments, including 3-in.-long rods or tubes.

  - Steam generator--1 to 4 L of silt and solids on upper tube sheet. Solids are less than 0.5-in.-diameter pieces of core material (predominantly uranium), including core material reaction products.

    Lower head -10 to 20 L of silt and solids.

  - Cold legs and pump--60 L of silt (<5 μm particle size) and flake-like particles.

- **Pressurizer**:

  - Ten liters of silt and flake-like particles. Silt particle sizes are 37%-->50 μ; 43%--20-50 μ; 19%--5 to 20 μ; and 1%--<5 μ. Iron is the principal metallic element and is three times greater than the uranium abundance. Metallic elements are only 21% of the sample, with the balance possibly being organics, volatile complex compounds, and/or sodium.

- Decay heat line:

  - 37.6 L of core material fragments and silt (<5 μm particle size).

4.3.3.2 Surface Deposit Sample Examination Findings. The examination of surface deposits on the RTD thermowell from the A-loop hot leg, manway cover backing plates from the upper head regions of the two steam generators and the pressurizer, and the handhole (inspection port) cover backing plate from the upper head region of the A-loop steam generator has produced the following findings:

- Surface deposit appearance:

  - RTD thermowell from A-loop hot leg--dull yellow.

    Backing plates from A-loop steam generator upper head -low-luster, tarnished surface with regions of brownish crud.

  - Backing plate from B-loop steam generator upper head region -low-luster, tarnished surface.

  - Backing plate from pressurizer upper head region--dull, dark grey, adherent surface deposit.

- Fission product retention:

  - Insignificant (<1% of any fission product retained).

- Radioactive surface deposition (gross):

  - RTD thermowell from A-loop hot leg--30.3 $\mu Ci/cm^2$.

  - Backing plate from A-loop steam generator upper head region--7.2 $\mu Ci/cm^2$.

- Backing plate from B-loop steam generator upper head region--2.1 $\mu Ci/cm^2$.

- Backing plate from pressurizer upper head region--0.48 $\mu Ci/cm^2$.

o Decontamination:

- Surface deposit removal will require repeated application of decontamination solutions.

4.3.3.3 Loose Deposit Sample Examination Findings. The examination of loose debris from the upper tube sheets of the A and B loop steam generators (S-G) has produced the following preliminary findings:

o Large particle density:

Material Type	Quantity	Density g/cc Average	Low	High
B S-G fuel pellet fragment	1	10.4	--	--
B S-G oxidized zircaloy cladding	1	6.0	--	--
B S-G poison (Ag-In-Cd) material	2	9.2	9.0	9.9
B S-G core material reaction products	6	7.6	5.6	8.7
A S-G particles	2	5.3	4.9	5.3

o Elemental Composition:

- Reaction product particles from the B-loop steam generator are principally uranium, zirconium, and oxygen.

- The elemental composition of two of the particles is close to the composition of the core bore samples from the consolidated region of ceramic material.

Bulk sample from the B-loop steam generator is predominantly (57%) uranium.

- o Radioactivity:

  - On April 1, 1987, the B steam generator loose debris radioactive contamination was 5.4 mCi/g.

The B steam generator loose debris is of special interest because it represents a sample of core material collected from the core region during the core damage sequence (174 min after accident initiation) when the B loop primary coolant pump was activated.

4.4 Detailed Work Plan

The RCS SA&E work plan details for FY-1988 and beyond are contained in Work Package 755421000, RCS Fission Product Inventory Sample Examination.

Table 12 summarizes the sample (RCS adherent surface and loose deposits) acquisition and examinations which are included in this work plan. The Table includes the AEP-designated sample priority (1-20), the quantity of samples, the TMI-2 accident information expected from the examination, and the examination techniques that will be used to obtain the information.

The product of the RCS SA&E work plan consists of technical reports of sample examinations, as follows:

Reports		Target Completion Date
1. RCS surface deposits examinations final report:	draft	December 1987
	final	April 1, 1988

TABLE 12. RCS SAMPLE ACQUISITION AND EXAMINATION PLAN SUMMARY

Measurement/Sample Description	Priority[a]	Sample Quantity	TMI-2 Accident Information	Examination Methods[b]
1. RCS adherent surface deposits	12		All:	
			Color, surface texture	1
			Total radioactivity and distribution	4
a. A-loop steam generator manway cover backing plate		1		
b. B-loop steam generator manway cover backing plate		1	Fission product abundance and distribution: Mn-54, Co-60, Ru-106, Ag-110, Sb-125, Cs-134/137, Ce-144, Eu-154/155	5, 12
c. Pressurizer manway cover backing plate		1	I-129	5, 10
	1		Sr-90	11
			Te	6
			Core material abundance and distribution: Zr, Fe, Ni, Ag, In, Cd, Cr, Sn, Al, Mn, Si, Cu, Gd, Mg, Mo, Nb, B	6, 7, 8, 12
			U (includes U-235)	6, 8, 9, 12
			O	13
			Most abundant core material chemical form	15
			Decontaminatability	14
2. RCS sediment:	12		All:	
			Volume/weight	2,16
a. Pressurizer lower head loose debris[c]		1	Particle size (transportability)	3
b. Steam generator upper tube sheet loose debris		2	Color, surface texture, shape	1
			Total radioactivity	4
			Fission product abundance and distribution: Mn-54, Co-60, Ru-106, Ag-110, Sb-125, Cs-134/137, Ce-144, Eu-154/155	5, 12
			I-129	5, 10
			Sr-90	11
			Te	6
3. A loop steam generator handhole cover backing plate		1	Color and surface texture	1
			Radioactivity level and distribution	4

TABLE 12. (continued)

Measurement/Sample Description	Priority[a]	Sample Quantity	TMI-2 Accident Information	Examination Methods[b]
			Core material abundance and distribution:	
			Zr, Fe, Ni, Ag, In, Cd, Cr, Sn, Al, Mn, Si, Cu, Gd, Mg, Mo, Nb	6, 7, 8, 12
			U (includes U-235)	6, 8, 9, 12
			O	13
			Most abundance core material chemical form	15

a Priority values 1 through 20 are listed in Table 3.

b. Examination methods:

1. Photography
2. Balance weighing
3. Sieving
4. Ion-chamber gamma detection (including scans)
5. Germanium-crystal gamma spectrometry
6. Inductively coupled plasma emission spectrometry
7. Spark source mass spectrometry
8. Scanning electron microscopy with energy dispersive x-ray
9. Delayed neutron radiochemistry
10. I-129 radiochemistry
11. Sr-90 radiochemistry
12. Metallography
13. Metallography with Auger spectrometry
14. Acid solution decontamination tests
15. X-ray diffraction
16. Immersion density

c. Sample examination being performed by Westinghouse and GPU Nuclear.

Reports		Target Completion Date
2. RCS loose deposits examinations report	draft final	January 1988 July 1988
3. A steam generator upper tube sheet loose particles assay report		January 1988
4. B steam generator upper tube sheet loose debris U-235 enrichment analysis		December 1987

Additional reporting will be done by means of the fission product inventory program updates to be prepared by the Examination Requirements and Systems Evaluation Group.

4.5 Synopsis

RCS exploration during FY-1987 provided more detailed information to estimate the amount of core materials deposited in the vessels and piping. The RCS SA&E plan is expected to satisfactorily characterize the abundance, distribution, and form of the radionuclides (fission products) and core materials deposited in the RCS and the extent to which the RCS can be decontaminated.

5. EX-REACTOR COOLANT SYSTEM SAMPLE ACQUISITION AND EXAMINATION WORK PLAN

5.1 Introduction

The ex-RCS fission product inventory SA&E work plan includes the buildings and equipment outside the TMI-2 RCS that are believed to be either migration paths or destinations of core fission products or materials during and after the TMI-2 accident sequence. Figures 24 and 25 show the TMI-2 nuclear power plant site at Three Mile Island on the Susquehanna River in Middletown, Pennsylvania, with its older sister plant, TMI-1. The following site features are of special interest to the ex-RCS fission product inventory SA&E program:

- Reactor Building (see Figure 26). The reactor building consists of a steel-plate-lined, reinforced concrete, cylindrically shaped vessel designed to contain the consequences of a large-break, loss-of-coolant accident, including internal pressure of 60 psig at 286°F. The reactor building contains the RCS and other auxiliary equipment and extends from the 282-ft (above sea level) elevation at the basement floor to the 473-ft elevation at the dome top. The site grade level is 304 ft, and the normal Susquehanna River level is 290 ft.

- Auxiliary and Fuel Handling Buildings (AFHB). A plan view of the interconnected, concrete-walled buildings is shown in Figure 27. The buildings are designed for radiation emission control because their functions include reactor coolant purification and degasification and spent fuel storage. The basement floor of both buildings is at the 280-ft elevation, with the auxiliary building penthouse roof at the 376-ft ele5ation and the fuel handling building roof top at the 400-ft elevation.

- Vent Stack. The steel pipe vent stack, also shown in Figure 26, extends from the 331-ft elevation to 463 ft, where gas/vapor effluent from the TMI buildings, including the reactor building and AFHB, can be released to the atmosphere.

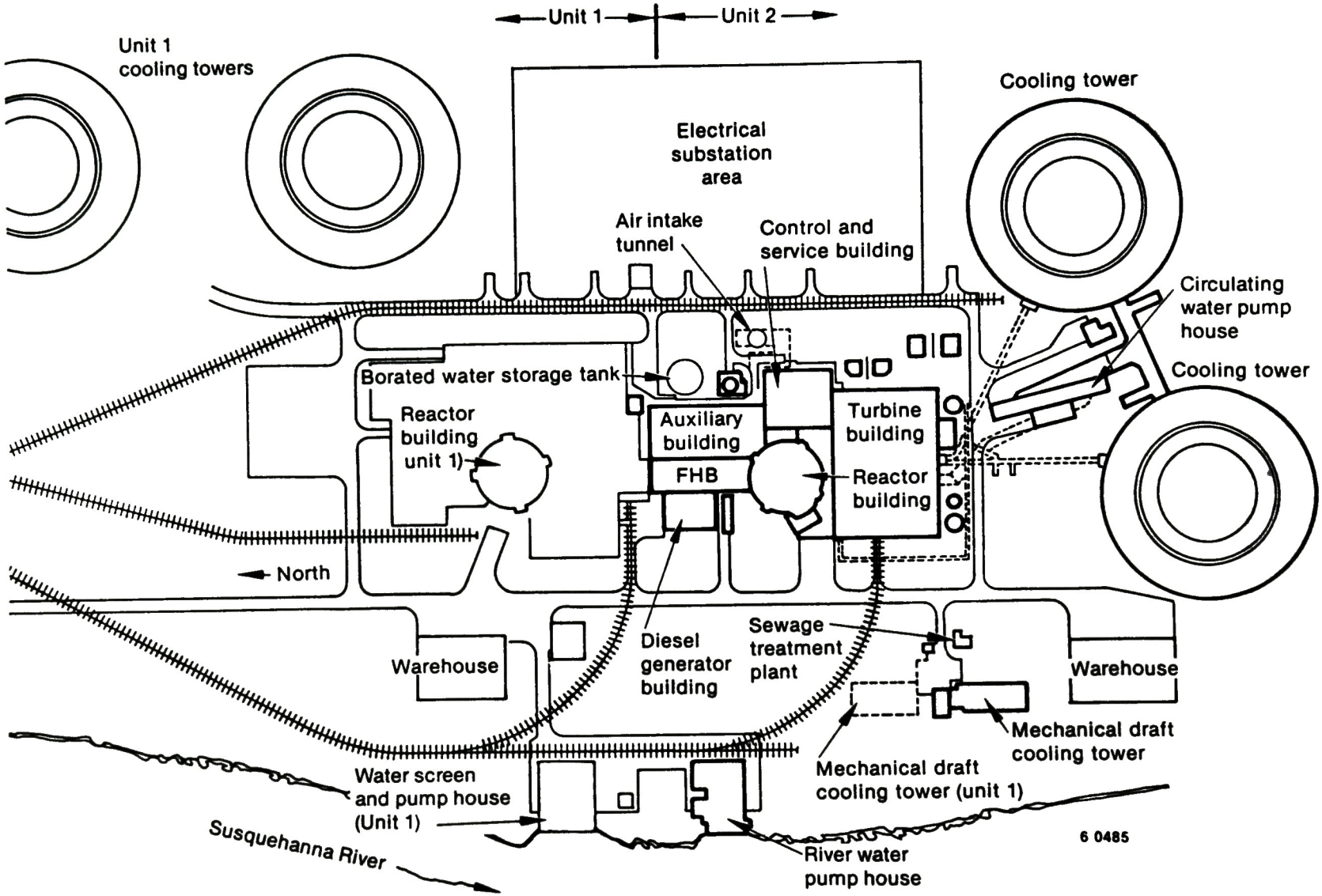

Figure 24. TMI-2 site plan.

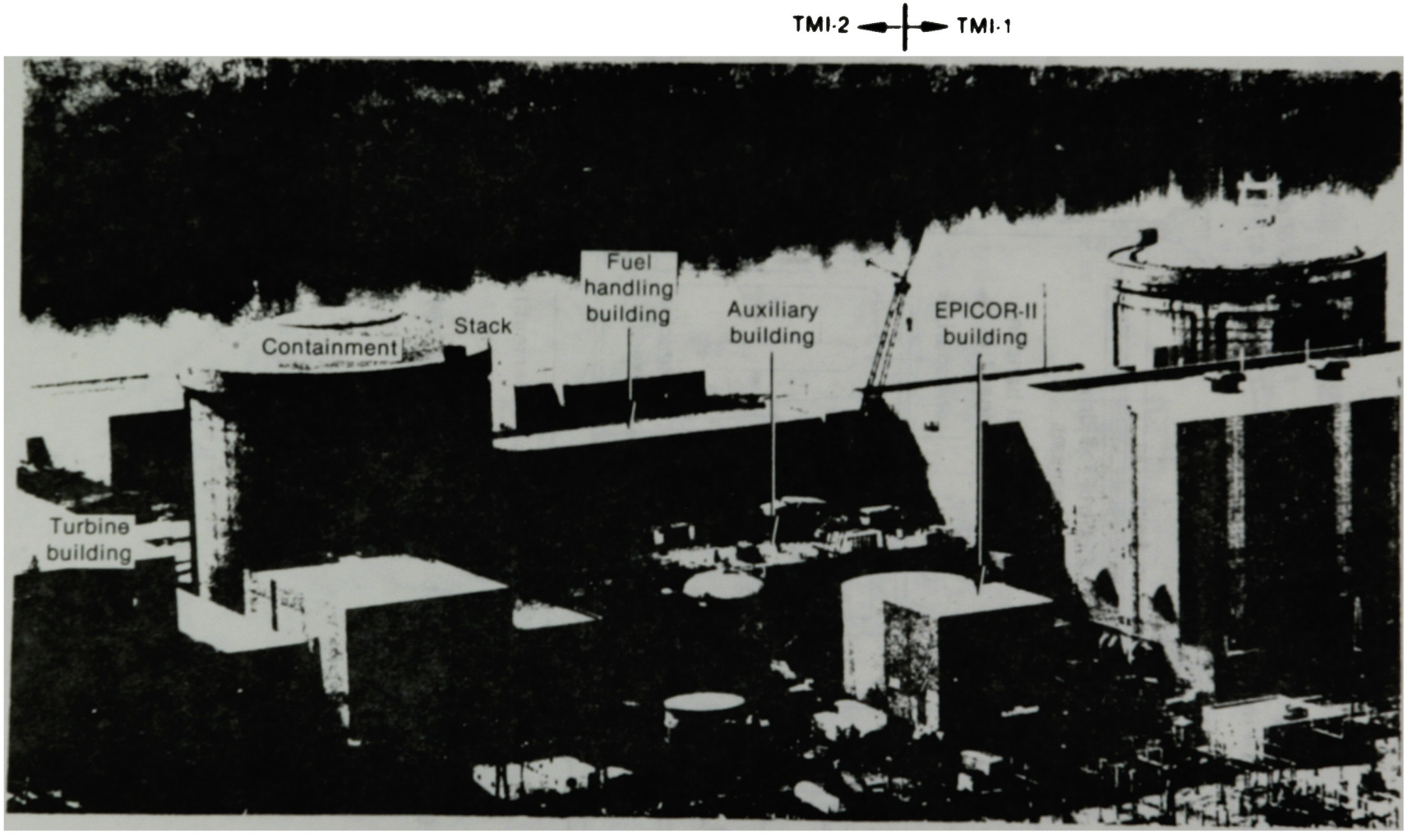

Figure 25. General building arrangement at TMI.

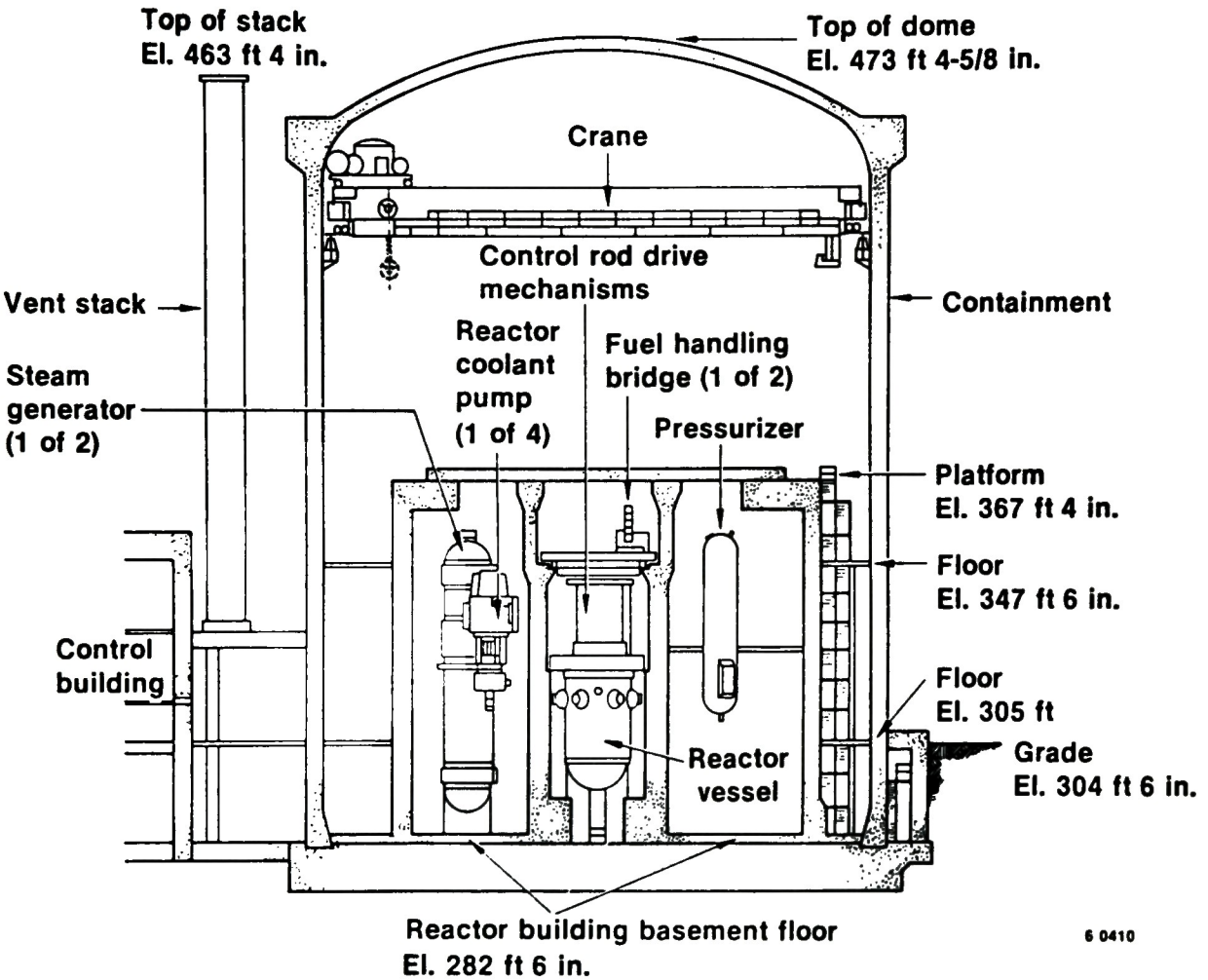

Figure 26. TMI-2 reactor building and major components of primary cooling system.

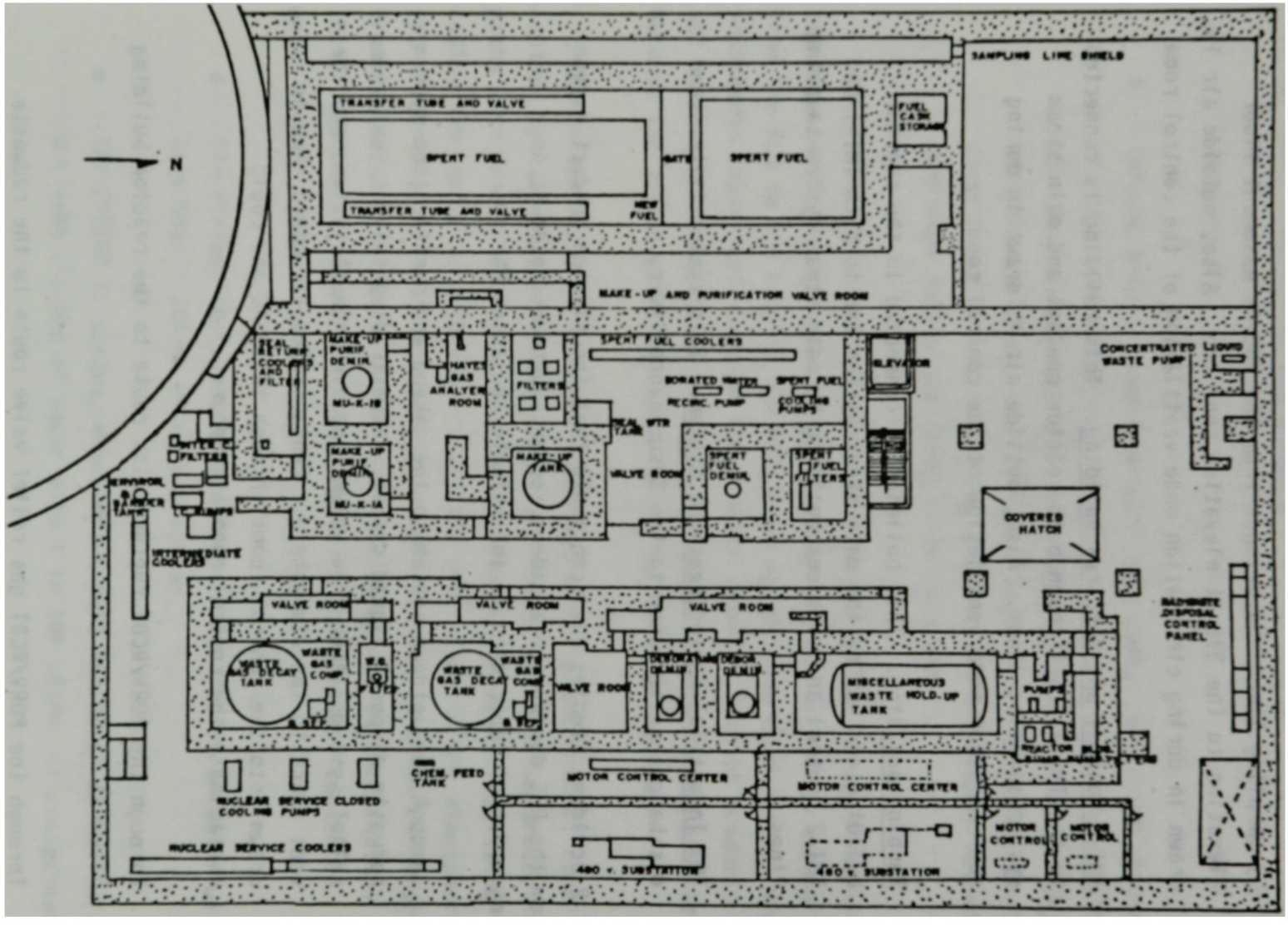

Figure 27. TMI-2 auxiliary and fuel handling buildings.

- TMI-2 Control and Services Building. This building is connected to the AFHB by floor (liquid) drains and to the main steam system by sampling lines and extends from the 280-ft basement floor elevation to the 376-ft elevation roof top. Also, outside air is drawn in during circulation-mode ventilation of the control room.

- TMI-1 Control and Services Building. This building is connected to the TMI-2 RCS through both reactor coolant and main steam system sampling lines. Also, outside air is drawn in during recirculation-mode ventilation of the control room.

- Turbine Building. This building is connected to the reactor building and RCS by the main steam system and to both TMI-1 and TMI-2 control and services building by main steam system sampling lines.

- TMI Industrial Waste Treatment System. This system filters and discharges waste water to the Susquehanna River.

TMI-2 accident studies have concluded that the fission product escape paths from the RCS during the accident sequence were as follows, in descending order of importance to the offsite radiation hazard:

1. Through the letdown system to the makeup and purification system radwaste disposal liquid system, radwaste disposal gas vent and relief systems, AFHB free volume and air exhaust system, and the vent stack to the atmosphere. Contaminated air could then be drawn into the control rooms through the HVAC and could contaminate the control room atmosphere.

2. Through the PORV/RCDT rupture disk route to the reactor building basement floor and free volume.

3. Through the PORV/RCDT gas relief valve route to the radwaste disposal gas vent system, AFHB free volume and air exhaust system, and the vent stack to the atmosphere.

4. Through the RCS water sample line into the TMI-1 control and service building free volume and liquid drains and industrial waste treatment system to the Susquehanna River (believed to be very minor).

5. Through B-loop steam generator tube leaks to (a) the atmosphere, via the main condenser, condenser vacuum system, the auxiliary building air exhaust discharge, and the vent stack; and (b) the Susquehanna River, via the main steam system sampling lines, both control and service buildings drains, and the industrial waste treatment system (believed to be very minor).

The reactor vessel bottom and core instrument cable chase regions have not been sufficiently explored to determine whether or not an escape path from the RCS to the reactor building free volume developed through the core instrument train tubes beneath the reactor vessel. Fission products did not escape to the auxiliary building by reactor building sump pump action because the escape path was closed prior to fuel rod rupture.

After the accident sequence concluded with commencement of core cooling by natural circulation (April 27, 1979), all fission product escape paths were controlled, including (a) the venting of reactor building radioactive gases through filters and the vent stack to the atmosphere and (b) the transport to offsite repositories of filters and ion exchange resin from the water treatment/cleaning system cleanup and decontamination of the TMI-2 liquid that became contaminated during the accident sequence. The water cleanup systems included the following:

- The already installed EPICOR-I system at TMI-1 for water with less than 1 μCi/mL of contamination.

- The EPICOR-II system, which was specially installed for TMI-2 accident cleanup of water with 1 to 100 μCi/mL of contamination.

- The SDS, which was specially installed in the TMI-2 AFHB spent fuel storage pool for TMI-2 accident cleanup of water with greater than 100 μCi/mL contamination.

During and after the TMI-2 accident sequence, which lasted until natural circulation cooling commenced (30 days after accident initiation), many events occurred that affected the character and distribution of fission products and core materials that escaped from the RCS. The most significant events include the following:

- Fission product and a small uranium fraction release began in the RV at approximately 138 min after accident initiation, when fuel rod rupture commenced. Reactor coolant circulation had ceased, and the available escape paths from the RCS were through: (a) the stuck-open PORV to the RCDT, where liquid could escape to the reactor building basement floor through the rupture disk and vapor could escape through vent lines to the radwaste disposal vent gas system in the auxiliary building; and (b) the letdown line upstream of reactor coolant pump RCP-P-1A that led to either the makeup/purification or radwaste disposal systems in the auxiliary building.

- The PORV to RCDT escape path was closed 142 min after accident initiation.

- Zircaloy-steam reaction became significant at about 150 min, releasing hydrogen and other chemical reaction products into the RCS. Core material temperatures eventually reached or exceeded 3100 K, which could (a) generate aerosols from low-volatility materials and chemical reactions and (b) accelerate the escape of fission products from the uranium dioxide. Sufficient damage to the core instrument string calibration tubes probably occurred, allowing coolant to enter the calibration tubes, which extend to a "seal table" at the reactor building 347-ft elevation.

- A TMI-2 reactor coolant sample (140 μCi/mL gross activity) was taken (163 min) at the TMI-1 control and service building sampling station, introducing contaminated liquid into the liquid drains.

- Reactor coolant pump RC-P-2B was energized from 174 to 192 min after accident initiation; this event is believed to have reflooded the overheated core region, fragmented most of the standing fuel in the upper core region, and caused circulation of core material particles and fission products throughout the RCS.

- The B-loop main steam isolation valves were opened for 7 s at 176 min, which allowed secondary coolant contaminated by primary coolant leakage through suspected B-loop steam generator tube cracks to migrate to the condenser.

- The PORV to RCDT escape path was reopened from 192 to 197 min and 220 to 318 min.

- A significant relocation of core material from the core region to the flooded RV lower region occurred at 227 min, which likely increased the escape of core material and fission products to the letdown system.

- At 234 min plus, a B-loop steam generator secondary side water sample was drawn at the TMI-2 control and services building sampling station, introducing contaminated liquid to the building sump, from where it later migrated to the Susquehanna River through the industrial waste treatment system.

- The radioactive gas escape path to the radwaste disposal gas vent system through the RCDT vent was closed at 236 min during reactor building isolation.

- Overpressure in the reactor coolant makeup tank lifted the 80-psi-setpoint liquid relief valve at 266 min and discharged contaminated RCS liquid to the reactor coolant bleed holdup tanks (RCBHTs), which also overflowed and overpressured. The RCBHT overpressure lifted the 20-psi-setpoint relief valves and allowed unfiltered vapor to escape to the atmosphere, via the radwaste disposal gas relief header and the vent stack. It is also believed that liquid entered the radwaste disposal gas vent header, where it would be separated and drained to the auxiliary building sump.

- A sustained high-pressure injection period commenced at 267 min and continued to 544 min.

- A TMI-2 reactor coolant sample (>500 μCi/mL gross activity) was taken at 283 min from the TMI-1 sampling station, introducing contaminated liquid into the liquid drains.

- The PORV to RCDT escape path was reopened repeatedly from 340 to 458 min to prevent RCS overpressurization and opened from 458 to 550, 565 to 589, 600 to 668, 756 to 767, and 772 to 780 min to depressurize the RCS for core flood injection.

- TMI-2 control room air became contaminated (both particulate and noble gas channel alarms) at 370 min, requiring the use of personnel face masks and particulate filters until 670 min.

- A hydrogen burn occurred in the reactor building at 590 min, causing a 28-psig peak pressure and actuating the reactor building spray, which injected chemically treated (boron and sodium hydroxide) water into the reactor building for 6 min. A coincident interruption of power to the auxiliary building radiation monitor strip charts HP-UR-1901 and HP-UR-1902 is suspected. The HP-UR-1901 strip chart plotted the output of the RB purge unit area radiation monitor HP-R-3236, which was used to

estimate the TMI-2 accident offsite release on 4-28. The power interruption duration is estimated to be 2 h.

- Forced circulation cooling of the reactor was resumed at 949 min (15 h 49 min) through the A-loop with reactor coolant pump RC-P-1A.

- Letdown flow was lost from 18 h 34 min to 26 h 30 min.

- Overpressure in the letdown system lifted the 130-psi-setpoint relief valve MU-R-3 around midnight (20 h and 30 min), allowing reactor coolant escape to the RCBHT. The RCBHT relief valves are believed to have also lifted, allowing unfiltered vapor to escape to the atmosphere, and probably allowing liquid to enter the auxiliary building sump through the radwaste disposal gas vent header. This condition lasted longer than 40 min.

- TMI-2 control room air became contaminated (particulate channel alarm) at 22 h 11 min, requiring use of personnel face masks and particulate filters for 64 min.

- An escape path was created at 24 h 35 min by opening the makeup tank vent valve MU-V-13 to the radwaste disposal gas vent header. This pathway was reopened periodically for the next several days.

- A helicopter measured 3 R/h beta-gamma and 410 mR/h gamma at 15 ft above the TMI-2 vent stack at 34 h 10 min after accident initiation.

- A 100-mL TMI-2 reactor coolant sample was taken (36 h 15 min) at the TMI-1 control and services building sampling station, introducing contaminated liquid into the liquid drains. The sample radiation emission was >100 R/h at contact.

- Natural circulation cooling of the reactor commenced 30 days and 10 h (April 27, 1979) after accident initiation.

- Auxiliary building decontamination commenced 30 days (April 27, 1979) after accident initiation.

- Supplemental filters for auxiliary building venting commenced operation on May 1, 1979.

- The vent stack was capped on May 20, 1979.

- EPICOR-II cleanup of medium-contamination water commenced October 1979.

- Reactor building gas cleanup and venting commenced July 28, 1980, and included reopening of the vent stack.

- SDS/EPICOR-II cleanup of the high-contamination water commenced July 12, 1981. Reactor building basement water cleanup was completed in May 1982.

- Reactor building decontamination commenced in March 1982.

An estimated 643,000 gal of contaminated water collected in the reactor building basement between accident initiation and September 1981, when SDS cleanup of the water commenced. The steadily increasing depth of water in the basement at key accident-sequence events was as follows:

Time After Accident Initiation	Event	Basement Water Depth[a]
227 min	Major core material relocation to reactor vessel lower plenum region	10 in.
15 h 40 min	Commence sustained forced-circulation cooling of core	2 ft 8 in.

Time After Accident Initiation	Event	Basement Water Depth[a]
30 days 10 h	Commence natural circulation cooling of core	4 ft 3 in.
910 days (09/23/81)	Commence SDS cleanup of RB Basement	8 ft 6 in.

a. Assumes linear relationship of gallons of water to water depth; 643,000 gal equals 8 ft 6 in. water depth.

The basement water is believed to have been composed of the following sources on 09/23/81 (see Reference 1):

Water Source		Percent
RCS:	First 72 h of accident	41
	Next 907 days	28
Reactor building spray system		3
Susquehanna River		28

The spray system water contained boron and sodium hydroxide chemicals, and the river water (from leaks in the river water cooling system) silt was composed of the following major elements in order of concentration: iron, silicon, manganese, lead, calcium, potassium, sulfur, aluminum, barium, sodium, and titanium.

The event sequence shows a chronological separation of core damage events and the offsite radiation release. The core damage probably ended about 4 h and 30 min after accident initiation, when the high-pressure injection refill of the RCS commenced. The probable initiation of the offsite radiation hazard coincident with the measurement of TMI-2 control room air contamination was 6 h and 10 min after accident initiation. The control room air is believed to have been contaminated by the outside air.

The offsite radiation release continued for several days until the makeup tank venting through valve MU-V-13 was no longer necessary.

The measurements of the offsite radiation source characteristics showed that noble gases were the dominating contributor to the offsite source term and that cesium and iodine contributions were negligible. This observation indicates that effectively all of the nongaseous fission product (cesium, iodine, strontium, etc.) inventory was retained by the TMI-2 buildings and equipment during the TMI-2 accident sequence.

The TMI-2 ex-RCS buildings and equipment are still being decontaminated. The decontamination process commenced April 27, 1979, 30 days after accident initiation. All fluid systems have been flushed, fluid and gas filters have been removed, fluid treatment resin beds have been removed or decontaminated, and TMI-2 accident liquid effluent decontamination was begun. The decontamination has not yet reduced radiation to personnel-entry levels in the following areas:

- The reactor building basement, which includes the letdown coolers, the RCDT, sediment containing fission products and core materials, and concrete, which has absorbed fission-product contaminated liquid.

- The reactor building D-ring compartment, which contains the RCS B-loop.

- The fuel handling building makeup and purification valve room, which contains the letdown system block orifice and piping.

The above conditions create a condition where (a) samples that are representative of, or traceable to, conditions which existed during the accident are no longer numerous and (b) sample acquisition from contaminated personnel exclusion areas is limited to what can be obtained with remote-operated hand tools and robots.

5.2 Purpose

The purpose of the ex-RCS SA&E program is the retrieval and examination of reactor building basement sediment and absorber (concrete) samples. The examination objectives are to complete the ex-RCS search program for fission products and core materials which escaped from the RCS during and following the TMI-2 accident. The specific examination objectives are to determine the following:

- Abundance and distribution of fission products and core materials in ex-RCS buildings and equipment that are judged to be inadequately surveyed.

- Current condition of the fission products and core materials that are found.

5.3 Accomplishments

5.3.1 Introduction

The ex-RCS search program for escaped radionuclides (fission products) and core materials has been a continuous effort since and including the day (March 28, 1979) of the accident. The expansion of the TMI-2 Core Examination Plan to a TMI-2 AEP has resulted in resumption of an ex-RCS SA&E work (search program) plan. The approach to developing a productive search program was to evaluate the current completeness of the search program by locating buildings and equipment which had not yet, or had only partially been, inventoried for fission products. The evaluation developed the following:

- A preliminary map (Figure 28), showing schematically the equipment, buildings, and areas where fission products may be present.

- A preliminary matrix chart (Table 13), showing the extent of the already completed TMI-2 accident fission product search program.

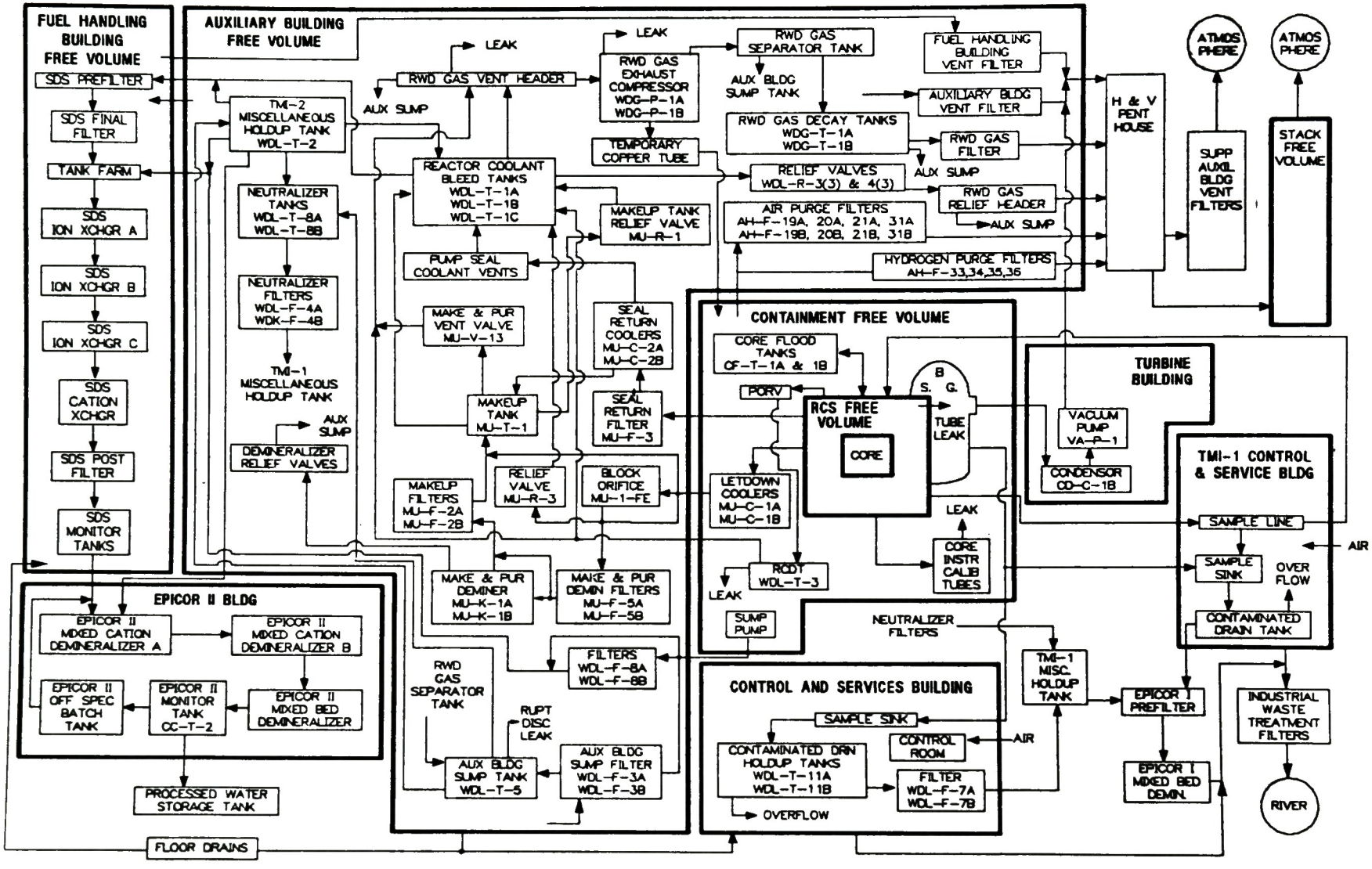

Figure 28. TMI-2 radioactive material location map.

TABLE 13 MATRIX TABLE OF COMPLETED FISSION PRODUCT INVENTORIES[a,b]

Location	Area Radiation Emission Mapping		Radiochemical Composition Examinations					Chemical Composition Examinations					Miscellaneous Information
	γ and β	γ spectra	Liquid	Gas	Solids and Sediment	Surface Deposit	Absorber	Liquid	Gas	Solids and Sediment	Surface Deposit	Absorber	
Core and RV lower plenum	I	--	I	NA	I	I	NA	I	NA	I	I	NA	--
RV upper plenum	I	-	I	NA	I (.5)	I (.5)	NA	I	NA	I (.5)	I (.5)	NA	C
Steam generators	I	I	I	NA	I	I	NA	I	NA	I	I	NA	C
Pressurizer	I	I	I	NA	I	I	NA	I	NA	I	I	NA	C
RCS piping, pumps and valves (PPSW)	I (partial)	-	I	NA		I (Partial)	NA	--	NA	--	I (partial)	NA	C
Core flood tanks	I		-	--	--	--	NA	--	NA	-	--	NA	C
Core flood piping	I	I	--	NA		-	NA	--	NA	-	--	NA	-
RWP letdown coolers	I	I (partial)	-	NA				--	NA		--	NA	(One may be blocked)[d]
RCS drain rank		--	I	NA	I	-	NA	--	NA	I (partial)	--	NA	C
Containment building free volume:													
1. 347 ft to dome	I	I	NA	I	NA	I	I (partial)	NA	I	NA	I	--	C
2. 305 ft to 347 ft	I	I	NA	I	NA	I	I (partial)	NA	I	NA	-	-	(partial)[c]
3. Basmt ft to 305 ft		--	I	I	I	I	I (Concrete)	I (partial)	I (partial)	I	--	I	10 in. water depth at 777 mm
Core instrument tubes	I	-	-	--	--	--	-	-	-	-	--	--	--
RWP block orifice	I	I	--	NA	--	-	NA	-	NA	-	--	NA	C
RWP demineralizer filters (5A and 5B)	1 of 2	Postfilter	-	NA		1 of 2	NA	--	NA	--	--	NA	C
RWP demineralizers	I (partial)	-	I (partial)	NA	I	-	NA	I (partial)	NA	I	--	NA	C
Makeup filters (7A and 7B)	1 of 2	Postflush	--	NA	I	--	NA	-	NA	I	-	NA	C
Makeup tanks	Postfilter	Postflush	--	-	--	-	NA	-	-		--	NA	C

TABLE 13. (continued)

Location	Area Radiation Emission Mapping		Radiochemical Composition Examinations					Chemical Composition Examinations					Miscellaneous Information
	γ and β	γ spectra	Liquid	Gas	Solids and Sediment	Surface Deposit	Absorber	Liquid	Gas	Solids and Sediment	Surface Deposit	Absorber	
R&PS PP&V	Postflush	Postflush	X	NA	--	-	NA	X	NA	--	--	NA	c
Pump seal return filter (F-3)	X	X	--	NA	--	--	NA	--	NA	--	-	NA	c
Pump seal return coolers	X	X	--	NA	--	--	NA	--	NA	--	--	NA	c
Pump seal injection filters (F-4a and 4b)	X	-	-	NA	X	--	NA	--	NA	X	--	NA	c
Pump seal PP&V		--	--	NA	--	--	NA	--	NA	--	--	NA	-
React building sump filters(8A and 8B)	-	-	--	--	--	--	--	--	--	--	--	--	Prerod burst contamination
RCS liquid waste PP&V:													
1. Reactor building	-	-	--	--	--	--	NA	--	-	--	--	--	--
2. Auxiliary building	--	--	--	--	--	--	NA	--	--	--	--	--	--
RCS bleed holdup tanks													
1. WDL-T-1A	X	X	X 12/79	--	X	-	NA	X (partial)	--	X	--	NA	8/20/81, start flushing[c]
2. WDL-T-1B	X	--	X 1/80	--	X	--	NA	X (partial)	--	X	--	NA	c
3. WDL-T-1C	X	X	X 2/80	--	X	--	NA	X (partial)	--	X	--	NA	c
Auxiliary building sump filters (3A and 3B)		-	--	--	-	--	-	--	--	-	--	--	Post core damage contamination
Auxiliary building sump tank	X	--	X 2/80	--	--	--	NA	X 2/80	--	--	-	NA	Post core damage contamination[c]
Miscellaneous waste holdup tanks	X	--	X	--	--	--	NA	X	--	-	--	NA	Post core damage contamination[c]
Neutralizer tanks	-		--	--	--	--	--	--	-	--	--	--	Post core damage contamination[c]
Neutralizer filter (4A and 4B)	9-25-81	--	X	--	--	--	--	X	--	--	--	--	Post core damage contamination

TABLE 13. (continued)

Location	Area Radiation Emission Mapping		Radiochemical Composition Examinations					Chemical Composition Examinations					Miscellaneous Information
	γ and β	γ spectra	Liquid	Gas	Solids and Sediment	Surface Deposit	Absorber	Liquid	Gas	Solids and Sediment	Surface Deposit	Absorber	
Auxiliary building radwaste disposal systems PRPV	-	-	I		--	-	-	-	-			-	-
RHR relief valve header	-	-		--	-	--	-	-				-	-
Reactor coolant process gas decay tanks	-	-	-	I	--	--	NA	-	-		--	NA	-
Reactor coolant process gas exhaust compressor		--	NA	--	-	--	NA	-	-		--	NA	--
Reactor coolant process gas exhaust filter	--	-	NA	NA		--	?	NA	NA		--	NA	--
Reactor coolant process gas ducting and valves		--	NA	I	--	-	NA	NA		-	--	NA	-
Auxiliary building ventilation filter		--	NA	I	--	-	?	NA	--	--	--	NA	-
Fuel handling building ventilation filter	-	--	NA	--	-	-	?	NA	--	--	--	NA	-
Auxiliary building ventilation ducting, valves, and compressor	-	--	NA	I	-	--	NA	NA	--	--	--	NA	--
Reactor building air purge filters	-	--	NA	--	--	--	NA	NA		--	--	NA	-
Reactor building air purge ducting, valves, and compressor	-		NA	--	--	-	?	NA	-	--	--	NA	-
RB air purge duct, valves and compressor			NA	-	--	--	NA	NA	-		--	NA	-
Auxiliary building free volume													
1. 320 ft to roof		-	-	I		--	-	-	-	-	--	--	-
2. 305 ft to 320 ft		-	-	I		--	--	--	-	--	--	--	--
3. 281 ft to 305 ft		--	I	I	--	--	--	I	-	--	--	-	--

TABLE 13. (continued)

Location	Area Radiation Emission Mapping		Radiochemical Composition Examinations					Chemical Composition Examinations					Miscellaneous Information
	γ and β	γ spectra	Liquid	Gas	Solids and Sediment	Surface Deposit	Absorber	Liquid	Gas	Solids and Sediment	Surface Deposit	Absorber	
Fuel handlg building free volume	-	--	X	--	-	--	--	X	-	--	--	--	--
Process gas separator tank	--	--	--	--	--	--	NA	--	-	-	--	NA	? NUREG-0600, p. II-3-11
Vent stack free volume	-	--	NA	X	-	--	--	NA	--	--	--	--	Capped 5/20/79 through 6/28/80
Auxiliary building supplemental filters	-	--	NA	-	--	--	?	NA	--	--	--	--	5/1/79 through 6/28/80
Contaminated drain tank	X	--	X	NA	--	--	NA	X	NA	--	--	NA	c
Contaminated drain tank filters	--	-	--	-	--	--	--	--		-	-	--	--
Control and service buildings radwaste disposal system PP&V	--	-	--	-	--	--	--	--	-	--	--	--	--
Reactor coolant sample line and valves	--	--	X	--	--	--	--	--	-	--	--	--	Until 6/17/80
TMI-1 contaminated drain tank	--	-	--	--	--	--	--	--	--	--	--	--	--
TMI-1 control and services building free volume	--	--	--	--	--	--	--	--	--	--	--	--	--
TMI-1 miscellaneous holdup tanks	--	-	--	--	--	--	--	--	--	--	--	--	--
Industrial waste treatment filters	--	-	--	--	-	--	--	-	--	--	--	--	--
Industrial waste treatment PP&V	--	--	X	--	--	--	--	--	-	--	--	--	--
[P]COR I prefilter	-	-	-	--	--	--	--	--	--	--	-	--	--
[P]COR I demineralizers	-	--	-	--	--	--	--	--	--	--	--	--	--
[P]COR I PP&V	-	--	-	--	--	--	--	--	-	--	--	--	--
[P]COR II demineralizer A	--	-	--	-	--	--	--	--	-	--	--	--	--

TABLE 13 (continued)

Location	Area Radiation Emission Mapping		Radiochemical Composition Examinations					Chemical Composition Examinations					Miscellaneous Information
	γ and β	γ spectra	Liquid	Gas	Solids and Sediment	Surface Deposit	Absorber	Liquid	Gas	Solids and Sediment	Surface Deposit	Absorber	
EPICOR II demineralizer B	-	-	--			--	-	--	--		-		-
EPICOR II mixed bed demineralizer	-	--	-	-	-	-	--	--	--		-	--	-
EPICOR II monitor tank		--	X ?	--	--	--	-	--	-			-	-
EPICOR II off spec batch tank		--	-	-	--	-	-	--				-	-
EPICOR II piping, pumps, and valves		-	--	-	--	-	-	-			--	-	--
SDS prefilter	-	-	-	--	X	--	-	-	--	X (TRU)	-	--	-
SDS final filter	-	-	-	-	X	--	-	--	--	X (TRU)	--	--	-
SDS tank farm	-	-	--	-	--	--	-	--	--		--	--	-
SDS ion exchanger A	--	--	--	--	X	--	--	--	--	X (TRU)	--		-
SDS ion exchanger B	-	-	--	--	X	--	-	-	--	X (TRU)	-	--	-
SDS ion exchanger C	--	--	--	--	X	--	-	--	--	X (TRU)	-		-
SDS post filters	-	-	-	-		--	-	--	--		-	-	-
SDS monitor tanks	--	--	X ?	--	-	--	--	-	--		--	--	-
SDS piping, pumps, and valves	-	-	-	--	-	-	-	-	--		-	-	--
Atmosphere	X	X	NA	X	NA	--	-	NA	-	NA	-	--	-
Susquehanna River	-	--	X ?	--	--	-	-	--	--	--	-	--	-

a. X indicates record exists of in situ measurement or sample examination.

b. X (.X) indicates fraction of equipment, building, or area inventoried

c. Science Applications, Inc. (SAI) history

- Knowledge that many other organizations have participated in the planning and performance of the ex-RCS fission product inventory program and that most building areas and equipment have been decontaminated so that samples that are representative of or traceable to conditions that existed during the accident are no longer numerous.

5.3.2 Acquisition

5.3.2.1 Tooling. The ex-RCS sample acquisition program has developed and provided the following sample acquisition tooling:

Drawing/Report Number	Description/Title	Status
TBD	Electrically operated, vacuum-actuated, remote-operated liquid/sediment sampler	Complete

The gamma spectrometer equipment listed in Subsection 4.3.1 was also used in the ex-RCS fission product inventory program.

5.3.2.2 Samples. The ex-RCS sample acquisition program has furnished to EG&G for examination the fission product inventory samples listed in Appendix D, Section A. Samples that were received at the INEL in FY 1987 include the following:

TMI-2 Location	Sample Type	Quantity	Date Acquired
RB basement D-ring wall	Fragmented 5000-psi concrete cores:		
	INT-80	<15g	July 1986
	C-54	<15g	July 1986
RB basement block wall	Fragmented concrete block cores: C3-3	<15g	July 1986
	UB-6	<15g	July 1986

Table 13 identifies the locations of many other in situ measurements and sample acquisitions and examinations which have been accomplished since 4:00 a.m. on March 28, 1979, to locate and characterize the fission products that escaped from the RCS during the accident.

5.3.3 Examination

The EG&G-controlled fission product inventory support program has produced the following reports:

Report Number	Title	Status
GEND-INF-011	First Results of the TMI-2 Sump Samples Analyses Entry 10	Complete July 1981
GEND-INF-011 Volume II	Reactor Building Basement Radionuclide Distribution Studies	Complete October 1982
GEND-INF-011 Volume III	Reactor Building Basement Radionuclide and Source Distribution Studies	Complete October 1982
GEND-INF-039	Final Analysis on TMI-2 Reactor Coolant System and Reactor Coolant Bleed Tank Samples	Issued June 1983
GEND-042	TMI-2 Reactor Building Source Term Measurements: Surface and Basement Water and Sediment	Complete October 1984
EGG-TMI-6181	Interim Report on the TMI-2 Purification Filter Examination	Complete February 1983
EGG-TMI-6580	TMI Particle Characterization Determined from Filter Examinations	Draft Complete September 1984
GEND-INF-041	Radionuclide Mass Balance for the TMI Accident: Data Through 1979 and Preliminary Assessment of Uncertainties	Complete November 1981
GEND-INF-054	Results of Analyses Performed on Concrete Cores Removed from Floors and D-Ring Walls of the TMI-2 Reactor Building	Issued June 1984

Report Number	Title	Status
H. M. Burton (EG&G) letter to B. K. Kanga (GPU) Hmb-207-83	Purification Demineralizer Resin Samples	Issued June 22, 1983
K. L. Wright (SAI) letter to E. R. Eidam (GPU Nuclear)	Radioanalytical Report (reactor building basement sediment sample examination)	Issued August 11, 1986
GEND-057	Fission Product Inventory Program FY 1985 Status Report	Issued November 1986
GEND-INF-081	Examination of Concrete Samples from the TMI-2 Reactor Building Basement	Published February 1987
EGG-TMI-7851	TMI-2 Fission Product Inventory Estimates (draft)	Published September 1987

Reports by others which describe and/or evaluate the ex-RCS fission product inventory investigation program are listed in Appendix A.

It appears that the greatest offsite radiation release occurred during the following periods:

- 20 to 92 h after accident initiation, due to probable noble-gas-dominated fission product escape from the vent stack via the letdown and radwaste disposal gas vent and relief systems.

- 6 to 11 h after accident initiation, due to probable noble-gas-dominated fission product escape from the vent stack via the letdown and/or radwaste disposal gas vent and relief systems.

Other findings include the following:

- The reactor building sump to auxiliary building liquid escape path was closed prior to fission product escape from the fuel rods.

- Most TMI-2 ex-RCS buildings and equipment have been completely or partially decontaminated by flushing, water treatment, contaminated filter removal, and water treatment resin removal.

Examination and testing of reactor building basement sediment and concrete bore samples and thermoluminscent detector mapping of basement radiation indicates the following:

- Radioactivity:

  - The radiation sources in the reactor building basement are as follows:

Material Type	$\mu Ci/cm^2$ [a]	Total (Ci) [b]
Concrete block (i.e., stairwells)	1200 to 12,900	18,000
3000-psi concrete walls	38 to 12,200	6,500
3000-psi concrete floor	18 to 161	1,500
5000-psi concrete walls	7.2 to 365	900
Steel wall liner	1 to 70	40
Floor sediment	--	700

a. Surface activity; measurement dates vary from early 1986 to early 1987.

b. Estimated by GPU Nuclear in early 1987.

  - Concrete wall contamination in the reactor building basement (a) penetrates into concrete about 1/4 in. in painted and unpainted high-density walls (not including steel plate lined walls) and throughout the block walls and (b) is concentrated near the high-water mark (5.5 to 8.5 ft above the floor).

- The sediment sample that was collected by robot in September 1985 produced 44.8 μCi/g in mid-1986.

o Sediment quantity--1.5×10^4 kg estimated by GPU Nuclear, including 1.7 to 3.2 kg of UO_2.

o Elemental composition--The metallic element composition (preliminary) of samples collected in September 1985 is principally copper, sodium, nickel, aluminum, and iron. Zirconium and silver were undetectable.

o Decontamination--It may be possible to remove most of the radioactivity from the concrete by leaching in a borated water solution.

5.4 Detailed Work Plan

The ex-RCS SA&E program work was concluded in FY-1986. The planned examination in FY-1987 of concrete samples from the reactor building basement was cancelled because sufficient characterization was accomplished by the REP program.

Other ex-RCS fission product sample examinations that had been considered include the following:

	Sample Description	AEP Priority	Sample Quantity
1.	Reactor building basement sediment from the elevator and sump well floor depressions	10	2 1-kg samples
2.	Reactor building basement wall liner adherent surface deposit	Low	2
3.	Equipment internal deposits:	Low	

Sample Description	AEP Priority	Sample Quantity
a. Reactor coolant drain tank		
o Sediment (only 9 mg had been collected and examined)		1
o Adherent surface deposit		1
b. Letdown coolers:		
o Sediment		2
o Adherent surface deposits		2
c. Letdown block orifice:		Entire orifice
o Sediment		
o Adherent surface deposits		

The impact of not examining these samples is judged to be minimal for the following reasons:

- The other reactor building basement floor sediment samples have provided sufficient data to assess the abundance of fission products and core materials in the basement sediment.

- The basement floor sump well was already sampled by collecting a liquid/suspended-solids sample during sump-pump-recirculation agitation of the sump contents, and only small quantities of fission products and core materials were found in the samples.

- A prior reactor coolant drain tank sediment sample collection with remote-operated hand tools indicated that the RCDT contains very little sediment, fission products, or core materials.

- The letdown line sediment and adherent deposits are believed to be small due to continual flushing action during the accident sequence. If suspected plugging of one letdown cooler is confirmed, the importance of letdown cooler sediment samples will be reconsidered. A pin-hole-type gamma camera survey of the block orifice indicated the block orifice does not contain as much fission product contamination as the nearby bypass line

plumbing, which is inconsistent with the suspicion of block orifice plugging that had been the basis for considering acquisition and examination of the block orifice.

- The TMI-2 accident sequence history information is not obtainable from the letdown system retained fission product and core material characterization because of postaccident flushing and the inability to segregate the sediment chronologically. The solids, which became suspended by the forced circulation of reactor coolant through the RCS which commenced about 16 h after accident initiation, would dominate the deposits in the letdown system and would not be traceable to chronological details of the accident sequence of events.

- The location and abundance of fission products and uranium in the letdown system and RCDT plumbing can be determined adequately using pin-hole-type gamma camera surveys, thermoluminescent detector strings, and portable gamma-spectrometer detectors.

5.5 Synopsis

The additional in situ (gamma detector and thermoluminescent detector strings) measurements and sample (sediment and concrete bore) acquisition and examinations accomplished by GPU Nuclear in FY-1986 significantly improved the exploration and characterization of the reactor building basement for core fission products and materials. Figure 29 is a map of the basement with symbols showing locations of in situ measurements and sample acquisitions made since the accident.

During 1987, DOE concurred with the EG&G recommendation to stop examination of samples from ex-RCS buildings and equipment so that the remaining TMI-2 AEP resources could be devoted to the region of higher interest in the RV. The ex-RCS buildings and equipment are judged to be adequately searched for fission products. Additional sample examinations would be unlikely to produce significant information about the fission products that escaped from the RCS during the accident sequence.

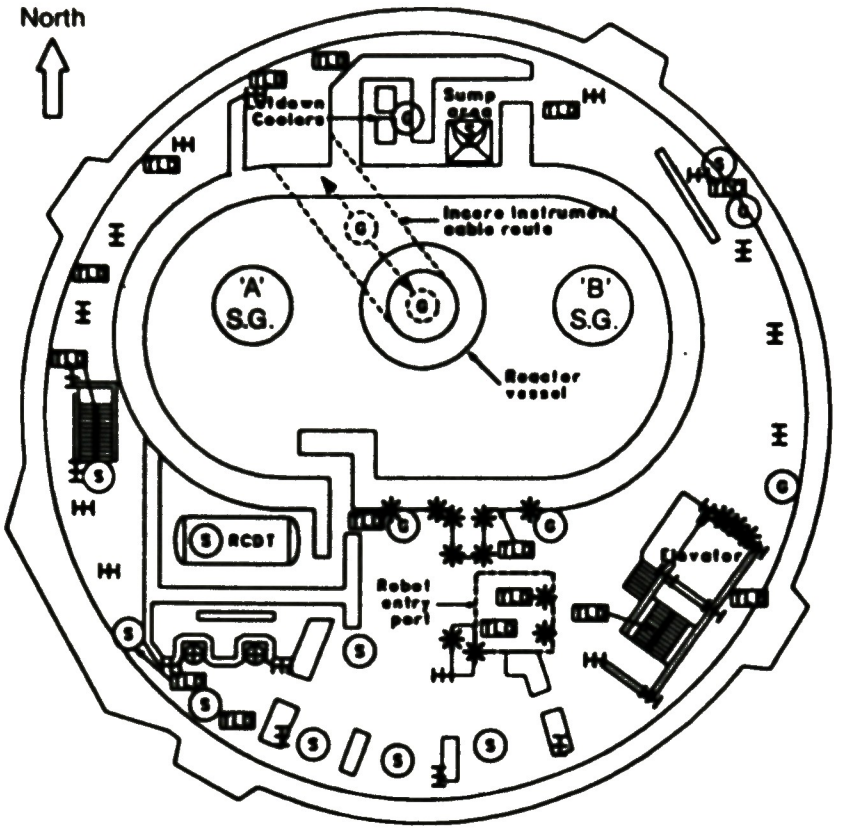

Concrete bore locations

Sediment sample location

TLD Thermoluminescent detector string radiation mapping site

Gamma spectrometer /or detector survey location

7-6422

Figure 29. TMI-2 reactor building basement--fission product inventory sample locations.

6. SAMPLE ACQUISITION AND EXAMINATION PROJECT MANAGEMENT SUPPORT WORK PLAN

6.1 Purpose

The TMI AEP SA&E project management support provides the following:

- Recruitment, maintenance, and supervision of a clerical and technical support staff.
- Planning, technical direction, control, and documentation for the TMI-2 Accident Evaluation Program in situ measurements and SA&Es.
- Planning, technical direction, control, documentation, and maintenance of some related support equipment (both hardware and software).
- Handling, packaging, storage, and disposal of samples.

The documentation support includes periodic (weekly, monthly, annual) report contributions and formal status and technical presentations to EG&G, DOE, and special review and technical society groups.

6.2 Accomplishments

Visible products of the management support include: the periodic status reports that have emanated from the project since the creation (1981) of the EG&G-operated TMI Unit 2 Technical Information and Examination Program, special reports, and master task subcontracts with private laboratories for TMI-2 sample examination support.

Special reports which have been published are as follows:

Report Number	Description/Title	Status
EGG-TMI-6169	TMI-2 Core Examination Plan	Revised July 1984
PF-NME-84-005	Participating Laboratories Survey	Completed September 1984
J. L. Mayberry letter to distribution JLM-1-85	Core Sample Acquisition and Examination Work Plan	Draft Issued January 1984 for internal review
R. C. Schmitt letter to distribution RCS-1-85	TMI-2 Core Examination Plan Evaluation	Draft issued January 1985 for internal review
EGG-TMI-7132	TMI-2 Accident Evaluation Program Sample Acquisition and Examination Plan	Issued January 1986
EGG-TMI-7121	TMI-2 Accident Evaluation Program Sample Acquisition and Examination Plan--Executive Summary	Issued January 1986
M. L. Russell letter to distribution MLR-7-86	TMI-2 Accident Reference Document Listing	Issued June 1986
R. K. McCardell letter to J. Royen RKM-18-86	Draft TMI-2 Sample Examination Plan (for CSNI Members)	Issued June 6, 1986
EGG-TMI-7521	TMI-2 Accident Evaluation Program Sample Acquisition and Examination Plan for FY 1987 and Beyond	Issued February 1987
J. M. Broughton letter to W. R. Young, JMB-64-87	TMI-2 Accident Evaluation Program Sample Collection Disposition	Issued September 15, 1987

Master task subcontracts which have been placed with private laboratories for TMI-2 sample examination support include the following:

Subcontract Number	Title	Status
C86-130969	Master Task Subcontract Between EG&G Idaho, Inc. and Battelle Columbus Division	Distributed April 1986
C86-130970	Master Task Subcontract Between EG&G Idaho, Inc. and General Electric Company	Distributed April 1986
C86-130971	Master Task Subcontract Between EG&G Idaho, Inc. and Babcock & Wilcox	Distributed May 1986

The current clerical and technical staff organization, shown in Figure 30, includes senior technical personnel with severe core damage accident and/or experiment and postaccident/experiment SA&E experience. The organization arrangement identifies the individual acquisition and examination project responsibilities and is intended to also:

- Identify one individual to function as a coordinator and spokesperson for each of the four areas of TMI-2 SA&E responsibilities at INEL.
- Sustain continuity of individual examination task responsibility.
- Distribute the staff support among all four INEL work assignment categories.

6.3 Detailed Work Plans

The management support work plan details are contained in the following work packages:

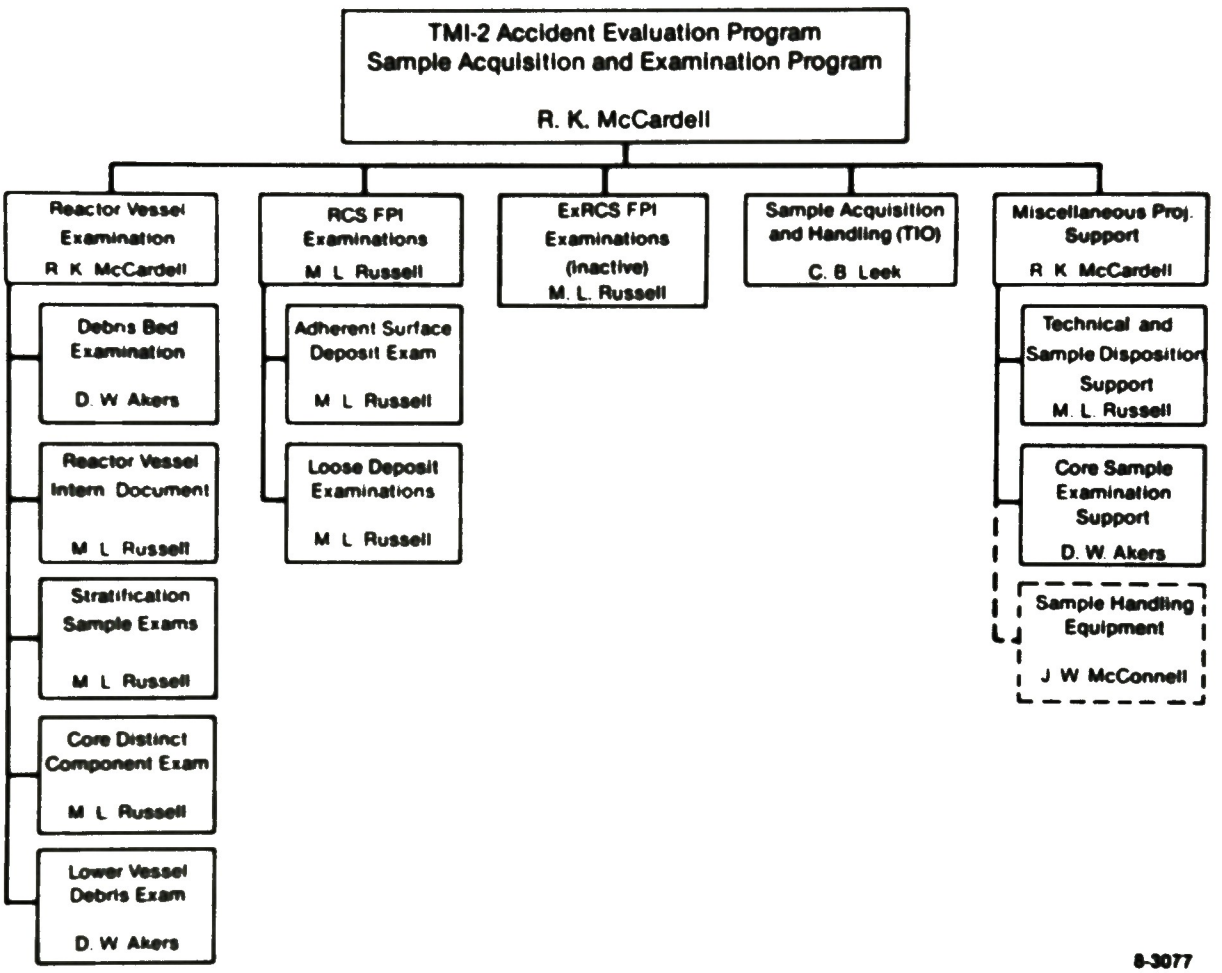

Figure 30. TMI-2 AEP SA&E project organization chart.

Work Package Number	Work Package Title
75542PM00	Sample Acquisition, Handling, and Examination Project Management
755422900	TMI-2 Sample Disposition

The deliverable products of the management support work plan are as follows:

Product	Target Completion Date
a. TMI-2 Accident Evaluation Program Sample Acquisition and Examination Plan for FY 1988 and Beyond (annual update)	February 1988
b. A revised TMI-2 sample list	December 1987
c. "Archive," Korea, JAERI and CSNI-Europe samples in INEL quick-access storage facilities	February 1987
d. Other samples in retrievable (TMI-2 fuel canister) storage at TAN Hot Shop pool	February 1987

7. SUMMARY

The material presented in the previous sections is intended to accomplish the following:

- Explain the development of the examination plan for the severe core damage accident issues set forth in the TMI-2 Accident Evaluation Program document from sample selection to final reporting of the sample examination results.

- Provide a perspective of the status of the TMI-2 accident investigation by identifying the examination program accomplishments in prior years.

- Be flexible to accommodate new findings, information, and knowledge that may become available from either this examination plan, the GPU Nuclear defueling program, or any SCD research program.

- Develop a TMI-2 accident examination program manual which can be (a) revised annually as new findings cause redirection and (b) used for reference by the analysts performing the studies needed to develop the understanding of the TMI-2 accident sequence and its radiological consequences.

The proposed financial plan for the SA&E Plan is shown in Table 14, and the companion schedule of activities is shown in Table 15. The list of work package numbers and titles on Table 14 identifies the entire work breakdown structure for the SA&E plan. In brief, the SA&E plan work breakdown structure provides the following:

- Acquisition of the samples listed in Table 5 in the Future Additional Samples column. For FY-1988, this includes two large-volume samples of core debris from the RV lower head region and possible peripheral fuel assembly lower sections at molten-core-material escape path locations.

TABLE 14. TMI-2 AEP SAMPLE ACQUISITION AND EXAMINATION WORK BREAKDOWN STRUCTURE AND FUNDING PLAN

Task	Work Package Number	Cost by FY-80 (in 000) FY-1985 Actual	FY-1986 Actual	FY-1987	FY-1988	FY-1989	Total
Sample Acquisition:							
Technical coordination	Complete	$ 7	$ 0	$ 0	$ 0	$ 0	$ 7
Project management	Complete	37	0	0	0	0	37
RV internals	Complete	52	36	0	0	0	88
RTD thermowells	Complete	7	0	0	0	0	7
In-core instruments	Complete	70	0	0	0	0	70
Fuel rod segments	Complete	107	83	0	0	0	190
Core bores	Complete	1,679	1,753	12	0	0	3,444
Leadscrews	Complete	16	(5)	0	0	0	11
RCS characterization	Complete	97	27	0	0	0	124
Discrete core components	Complete	18	34	0	0	0	52
RCS equipment/building characterization	751421300	0	26	7	66	0	99
AEP reserve	751421000	0	0	2	126	0	128
Acquisition Total	N/A	$ 2,090	$ 1,954	$ 20	$ 192	$ 0	$ 4,257
Sample Examination:							
Project management	75542PM00	$ 114	$ 495	$ 501	$ 452	$ 0	$ 1,562
Debris bed samples	Complete	411	139	113	0	0	663
RV internals documentation	Suspended	52	141	45	0	0	331
Ex-RCS FP inventory[a]	Complete	8	49	3	0	0	60
Lower vessel debris	Complete	1	0	0	0	0	1
Fuel rod segments	Complete	7	0	0	0	0	7
Core bores	755420600	8	353	2,275	492	0	3,128
Leadscrews	Complete	153	6	0	0	0	159
Leadscrew support tube	Complete	62	0	0	0	0	62
RCS FP inventory	755421000	19	59	213	148	0	439
Discrete core components	Complete	8	894	300	0	0	1,202
Lower vessel debris	755421600	0	196	75	326	0	597
Core former wall	Deleted	0	0	0	0	0	0
Core support assembly	Deleted	0	0	0	0	0	0
Core sample examination support	755422100	0	0	210	138	0	348
RV instrument penetration	Deleted	0	0	0	0	0	0
RV lower head	Deleted	0	0	0	0	0	0
CSNI samples	Complete	0	5	29	0	0	34
TMI-2 sample disposition	755422900	0	0	0	144	0	144
Examination Total	N/A	$ 843	$ 2,337	$ 3,764	$ 1,700	$ 0	$ 8,737
Acquisition and Examination Total	N/A	$ 2,933	$ 4,291	$ 3,784	$1,892	$ 0	$12,994

TABLE 14. (continued)

Task	Work Package Number	FY-1985 Actual	FY-1986 Actual	FY-1987	FY-1988	FY-1989	Total
		Cost by FY-80 (in 000)					
Related Capital Equipment:							
Stratification sample acquisition equipment	Complete	$ 1,710	$ 27	$ 0	$ 0	$ 0	$ 1,737
Core canister/sample handling equipment	Complete	455	637	0	0	0	1,092
Image processing and documentation	Complete	259	0	0	0	0	259
Core topography	Complete	377	174	0	0	0	551
Total RCE		$ 2,801	$ 838	$ 0	$ 0	$ 0	$ 3,639
Other DOE Labs		$ 115	$ 0	$ 0	$ 0	$ 0	$ 0
Costs Prior to 1985		$ 0	$ 0	$ 0	$ 0	$ 0	$ 1,966

a. FY-1985 work was RTD thermowells.

TABLE 15. TMI-2 AEP SAMPLE ACQUISITION AND EXAMINATION PLAN--SCHEDULE SUMMARY

Activity Description	Schedule FY-1988	Schedule FY-1989
RCS equipment and building characterization (sample acquisition)	XXXXXXXXXXXX	
AEP reserve	XXXXXXXXXXXX	
SA&E program management	XXXXXXXXXXXX	
Subsurface debris bed sample examination	XXX	
Core bore sample examination	XXXXXXXXXXXX	XXXX
RCS fission product inventory sample examination	XXXXXXXXXX	
Lower vessel debris examination	XXXXXXXXXXXX	XXXXXX
Core sample examination support	XXXXXXXXXX	

- Examination of the samples listed in the Proposed Future Exams column of Table 5. For FY-1988, this includes completing the examination of nine core bores, including fourteen fuel rod segments, four burnable poison rod/guide tube segments, and nine control rod/guide tube segments; two large samples of core cavity floor loose debris; a B-loop steam generator tube sheet top loose sediment sample; and other RCS loose sediment.

- The TMI-2 AEP pursued other resources to examine all the samples listed in the Future Additional Samples column of Table 5. The OECD/CSNI[a] will examine the samples listed in Appendix B, Table B-1.

A cost breakdown showing the proposed (1985) proportions of examination activities to the INEL, private laboratories, and other DOE laboratories is shown in Table 16.

Further subdivision of the WBS occurs during the process of authorizing the performance of work. INEL staff support and equipment and facilities operations are authorized, using a system of work releases, for nonunion-supported activities, and site work releases for union-supported activities. Work release documents include the WBS account number, detailed work scopes, schedules, and cost estimates. Site work release operations include step-by-step work procedures and quality assurance and operational safety organization approval and surveillance.

Offsite (non-DOE) support for services and/or equipment is obtained in two steps. First, the project authorizes the support with a requisition which includes the WBS account numbers, work scope/equipment technical specifications, and quality assurance requirements; the subcontracts organization then adds the federal-contract-regulation terms and conditions stipulations and obtains a qualified supplier to perform the work.

---

a. Organization for Economic Cooperation and Development, Committee on the Safety of Nuclear Installations.

TABLE 16. COST BREAKDOWN OF TMI-2 ACCIDENT EVALUATION PROGRAM SAMPLE EXAMINATION

Task	Funding ($ x 1000) INEL	Private Laboratories	Other DOE Laboratories
1. Subsurface debris bed samples	260.0	--	50[a]
2. Ex-RCS fission product inventory	--	399	--
3. Core bores	1,140.1	--	666.7 500[a]
4. RCS fission product inventory	18	375.4	--
5. Distinct core components	740	--	251
6. Lower vessel debris	600	--	50[a]
7. Instrument tube penetrations	40	210	--
Totals	2,798.1	984.4	1,517.7

a. Work performed at ANL-E and funded by NRC.

Other DOE laboratory support services are authorized with a requisition for services and/or equipment and/or a letter request to DOE with the appropriate work scope description. The finance transaction is conducted by DOE transfer of funds from the INEL cost account to the other laboratory cost accounts.

As work is performed, a comprehensive planning and budgets system provides cost and performance information using the work release, site work release, and requisition charge numbers as the basic accounting level. INEL labor and nonlabor charges are reported weekly.

8. REFERENCES

1. C. V. McIsaac and D. G. Keefer, TMI-2 Reactor Building Source Term Measurements: Surfaces and Basement Water and Sediment, GEND-042, October 1984.

2. E. L. Tolman et al., TMI-2 Accident Evaluation Program, EGG-TMI-7048, February 1986.

3. GEND Planning Report 001, June 1980.

4. J. O. Carlson, ed., TMI-2 Core Examination Plan, EGG-TMI-6169, July 1984.

5. D. W. Akers et al., Preliminary Report: TMI-2 Core Debris Grab Samples--Analysis of First Group of Samples, GEND-INF-060 Volume 1, July 1985.

6. E. L. Tolman et al., TMI-2 Core Bore Acquisition Summary Report, EGG-TMI-7385, Revision 1, February 1987.

7. R. W. Garner et al., An Assessment of the TMI-2 Axial Power Shaping Rod Dynamic Test Results, GEND-INF-038, April 1983.

8. L. S. Beller and H. L. Brown, Design and Operation of the Core Topography Data Acquisition System for TMI-2, GEND-INF-012, May 1984.

9. P. R. Bengel, TMI-2 Reactor Vessel Head Removal, GEND-044, September 1985.

10. V. R. Fricke, Results of End Fitting Separation in Preparation for Plenum Jacking, TPB-84-2, GPU Nuclear Corp, November 1984.

11. D. D. Wilson, TMI-2 Reactor Vessel Plenum Final Lift, GEND-054, January 1986.

12. S. Bokharee, Crust Breaking Via Core Drilling, TB-86-45, December 1986.

APPENDIX A

TMI-2 ACCIDENT REFERENCE DOCUMENTS LISTING (PRELIMINARY)

APPENDIX A

TMI-2 ACCIDENT REFERENCE DOCUMENTS LISTING (PRELIMINARY)

Appendix A contains a list of TMI-2 accident reference documents for use in planning and performing the TMI-2 AEP SA&E program. It is intended that the list have the following features:

- Completeness with regard to (a) all information that has been published about the planning of the SA&E program and (b) all information that has been published about the core damage and fission product inventory release during and following the accident.

- Identification of SA&E and other individuals holding of the listed documents.

- An annual update.

For convenience, the list is arranged chronologically by date of document issue and in the following information categories:

1. TMI-2 accident general information

2. RV information

3. RCS information

4. Ex-RCS information, including general fission product inventory information.

TMI-2 ACCIDENT EVALUATION PROGRAM SAMPLE ACQUISITION AND EXAMINATION REFERENCE DOCUMENTATION LIST--PRELIMINARY (December 1987)

Information[a] Category	Report Number	Publication Date	Title	Author		SA&E[d] Custodian
				Name	Company[b]	
1-1	Docket 50-320	00/71?	Three Mile Island Nuclear Station Unit 2--Final Safety Analysis Report:	Unidentified	MEC, JCPL and PEC	MLR
			Volume 1: Introduction, General Description of Plant and Site Characteristics			MLR
			Volume 2: Design Criteria--Structures, Components, Equipment and Systems			MLR
			Volume 3: Containment Structure Analyses Appendixes			MLR
			Volume 4: Reactor and Reactor Coolant System			MLR
			Volume 5: Engineered Safety Features			MLR
			Volume 6: Instrumentation and Controls			MLR
			Volume 7: Electric Power and Auxiliary Systems			MLR
			Volume 8: Steam and Power Conversion System, Radioactive Waste Management and Radiation Protection			MLR
			Volume 9: Conduct of Operations, Initial Tests and Operation and Accident Analysis			MLR
			Volume 10: Quality Assurance and Responses to Additional Information Requirements			MLR
			Volume 11: Responses to USAEC Request for Additional Information--First Round Questions			MLR
			Volume 12: Responses to USAEC Request for Additional Information--Second Round Questions			MLR
1-2	No number	04/79	Mechanical Flow Diagram, Electric One Line Diagram, and General Arrangement Drawings TMI-2	Not applicable	B&R	MLR
1-3	No Number	06/79	Second Interim Report on the Three Mile Island Station Unit 2 (TMI-2) Accident	Unidentified	MEC	
1-4	Burns & Roe R-008	06/79	Listing of All Reactor Building Electrical and Instrument Equipment	Lane	B&R	(Knauts)
1-5	GQL-0924	07/79	Third Interim Report on the Three Mile Island Station Unit 2 (TMI-2) Accident	J. G. Herbein	MEC	
1-6[c]	NUREG-0578	07/79	TMI-2 Lessons Learned Task Force--Status Report and Short-Term Recommendations	Unidentified	NRC-ONRR	MLR
1-7	No Number	07/79	Planning Study for Containment Entry and Decontamination	Not Identified	BNI	
1-8[c]	NUREG-0600	09/79	Investigation into the March 28, 1979 Three Mile Island Accident by Office of Inspection and Enforcement	Unidentified	NRC-IE	MLR
1-9[c]	No Number	10/79	Report of the President's Commission on the Accident at Three Mile Island--the Need for Change: The Legacy of TMI	J. G. Kemeny, et al.	President's Commission	MLR
1-10	NUREG-0585	10/79	TMI-2 Lessons--Learned Task Force--Final Report	Unidentified	NRC-ONRR	MLR
1-11	No Number	12/79	Summary Technical Plan for TMI-2 Decontamination and Defueling		MEC	
1-12[c]	NUREG/CR-1250	01/80	Three Mile Island A Report to the Commissioners and the Public--Volume II	M. Rogovin	NRC-SIG	
1-13[c]	NSAC-80-1	03/80	Analysis of Three Mile Island--Unit 2 Accident	Unidentified	NSAC	MLR

TMI-2 ACCIDENT EVALUATION PROGRAM SAMPLE ACQUISITION AND EXAMINATION REFERENCE DOCUMENTATION LIST--PRELIMINARY (December 1987)

Information[a] Category	Report Number	Publication Date	Title	Author Name	Author Company[b]	SA&E[d] Custodian
1-14	Heat Transfer Engineering Volume 1, No. 3	03/80	The Accident at Three Mile Island	J. G. Collier L. M. Davies	UKAEA	MLR
1-15	TMI-II-RR-6	04/80	TMI-2 Recovery Quarterly Progress Report for the Period Ending 3/31/80		MEC	
1-16[c]	GEND-001	06/80	GEND Planning Report	Unidentified	GPUN	MLR
1-17	NUREG-0660 Volume 1 and 2	08/80	NRC Action Plan Developed as a Result of the TMI-2 Accident	Unidentified	NRC	MLR
1-18	GEND-002	10/80	Facility Decontamination Technology Workshop November 27-29, 1979	Sponsored by DOE and EPRI	TIO	MLR
1-19[c]	NUREG-0683	00/81	Final Programmatic Environmental Impact Statement Related to Decontamination and Disposal of Radioactive Wastes Resulting from March 28, 1979 Accident--Three Mile Island Station Unit 2	Unidentified	MEC, JCP&LC, PEC	MLR (Draft)
1-20	R-81-002	01/81	Catalog of Data Collected During the TMI-2 Accident	Monday	TEC	(Knauts)
1-21	GPU-TDR-044	02/81	Annotated Sequence of Events, March 28, 1979	T. L. Van Witbeck J. Putnam	GPUN	MLR
1-22	GPU-TDR-261	05/81	Annotated Sequence of Events, March 29, 1979 Through April 30, 1979--TMI-2	R. Smith	GPUN	MLR
1-23	GEND-INF-022	08/82	Status of TMI-2 Instruments and Electrical Components	Herbert	EG&G	(Knauts)
1-24	NUREG-0900	01/83	Nuclear Power Plant Severe Accident Research Plan	Unidentified	NRC-ORNR	MLR
1-25	EGG-TMI-6169	04/83	TMI-2 Core Examination Plan--Review Copy	D. E. Owen, et al.	EG&G	MLR
1-26	SD-MM-TI-067 GEND-INF-023 Vol V	04/83	Analysis of Three Mile Island Unit 2 Reactor Cooling System Transients	J. O. Henrie A. K. Postma	RI-RHO	MLR
1-27	EGG-TMI-6169	12/83	TMI-2 Core Examination Plan	D. E. Owen, et al.	EG&G	MLR
1-28[c]	No Number	04/84	Report on TMI-2 Technical Data Acquisition Program Plan	J. C. Cunnane, et al	BCL	MLR
1-29	GEND-40	06/84	Final Report on the In Situ Testing of Electrical Components and Devices at TMI-2	K. T. Soberano	EG&G	
1-30	EGG-TMI-6169	07/84	TMI-2 Core Examination Plan	J. O. Carlson, Editor	EG&G	MLR
1-31[c]	PF-NME-84-005	10/84	TMI-2 Core Sample Acquisition and Examination Project--Participating Laboratories Survey	M. R. Martin S. O. Peck	EG&G	MLR
1-32	RCS-1-84 (Letter)	01/85	TMI-2 Core Examination Plan Evaluation	M. L. Russell	EG&G	MLR
1-33	NP-3810-SR[d]	01/85	Joint TMI-2 Information and Examination Program--EPRI Participation and Support	TBD	EPRI	MLR
1-34	ACS Symposium 293	05/85	Description of the TMI-2 Accident	G. Thomas	EPRI	
1-35	No Number	06/85	Needs for Results of TMI Data Acquisition and Analysis Program	M. H. Fontana, et al.	EAI	
1-36[c]	GEND-50	07/85	TMI Technical Information and Examination Program Instrumentation and Electrical Summary Report	R. D. Meininger	EG&G	MLR[d]
1-37	No Number	07/85	The Impact of TMI-2 on Future Licensing	W. F. Pasedag A. K. Postma	NRC NRC	MLR
1-38	No Number	09/85	TMI-2 Accident Evaluation Program--Draft	Unidentified	EG&G	MLR
1-39	N/A	10/85	TMI-2 Programs Division Master Plan Rev. 4	Unidentified	EG&G	RKM
1-40[c]	EGG-TMI-7132	01/86	TMI-2 Accident Evaluation Program Sample Acquisition and Examination Plan	M. L. Russell, et al.	EG&G	MLR

TMI-2 ACCIDENT EVALUATION PROGRAM SAMPLE ACQUISITION AND EXAMINATION REFERENCE DOCUMENTATION LIST--PRELIMINARY (December 1987)

Information[a] Category	Report Number	Publication Date	Title	Author		SA&E[d] Custodian
				Name	Company[b]	
1-41[c]	EGG-TMI-7121	01/86	TMI-2 Accident Evaluation Program Sample Acquisition and Examination Plan--Executive Summary	M. L. Russell, et al.	EG&G	MLR
1-42	NP-4292	01/86	Simulation of the TMI-2 Accident Using the MAAP Modular Accident Analysis Program Version 2.0	M. A. Kenton et al.	FAI	MLR[d]
1-43	EGG-TMI-7048	02/86	TMI-2 Accident Evaluation Program	E. Tolman, et al.	EG&G	MLR
1-44	EGG-TMI-7048	02/86	TMI-2 Accident Evaluation Program	E. Tolman et al.	EG&G	MLR
1-45	CONF-8510166	04/86	Proceedings of the First International Information Meeting on TMI-2 Accident (10-21-85)	Compiled by S. R. Langer	EG&G	MLR[d]
1-46[c]	DOE/NE/34109--TI	04/86	USDOE and GPUNC R&D Activities on TMI-2, Annual Report for 1985	Not Identified	GPUNC EG&G	MLR[d]
1-47[c]	GEND-055	04/86	USDOE TMI R&D Program 1985 Annual Report	G. R. Brown, Editor	EG&G GPUN	MLR
1-48	TPO/TMI-186	07/86	Planning Study on a Strategy for Recovery Program Completion and Postconfiguration			
1-49	EGG-M-25686 (WRSR Mtg. - 1986)	11/86	Update on Standard Problem, Data Base, and Uncertainties	D. W. Golden	EG&G	MLR
1-50	EG&G Letter PJG-89-86	12/86	TMI-2 Programs Division Master Plan Revision 6	P. J. Grant	EG&G	MLR
1-51[c]	EGG-TMI-7521	02/87	TMI-2 Accident Evaluation Program Sample Acquisition & Exam Plan for FY 1987 and beyond	M. L. Russell et al.	EG&G	MLR
1-52[c]	None	04/87	USDOE and GPUN Research and Development Activities on TMI-2 Annual Report for 1986	Not identified	GPUN EG&G	(French)

TMI-2 ACCIDENT EVALUATION PROGRAM SAMPLE ACQUISITION AND EXAMINATION REFERENCE DOCUMENTATION LIST--PRELIMINARY (December 1987)

Information[a] Category	Report Number	Publication Date	Title	Author Name	Author Company[b]	SA&E[d] Custodian
2-1	Parts 1 and 2					
2-2	10/1/86		Samples Taken from TMI-2 Upper Plenum			
2-3	No number		Results of Micro-Examination of Samples from the TMI-2 Lower Plenum December 1985 and January 1986	R. V. Strain et al.	ANL-E	MLR
2-4	No Number	08/69	RV Internals Drawings--(Reduced Size)	N/A	B&W	MLR
2-5	TRG-71-37 Rev. 1	01/76	Internals Fabrication and Trial Fitup--Photographs	Unidentified	B&W	MLR
2-6	B&W FRD-79-269	04/79	In-Core Thermocouple Data	Walton	B&W	(Knauts)
2-7	No Number	04/79	In-Core Instrument Resistance Measurement	H Warren		
2-8	TDR-049	08/79	TMI-2 Postaccident Criticality Analyses	E. W. Barr, et al.	GPUN	
2-9	GOV-00-0095	10/79	Technical Staff Analysis Report on Chemistry to President's Commission on the Accident at Three Mile Island	R. E. English Task Force		MLR
2-10	ORNL/CSD/TM-106	12/79	Criticality Analyses of Disrupted Core Models of TMI-2	R. N. Westfall, et al.	ORNL	
2-11	LA-8041-MS	03/80	TMI-2 Decay Power: LASL Fission Product and Actinide Decay Power Calculations for the President's Commission on the Accident at Three Mile Island	T. R. England W. B. Wilson	LASL	
2-12	B&W-80-78	10/80	Catalog of TMI-2 Data (loose parts monitor, SPND, core TC)		B&W	(Knauts)
2-13	NSAC-24	01/81	TMI-2 Accident Core Heat-up Analysis	TBD	NSAC	
2-14	SAI-DP-245-22	01/81	TMI-2 Instrument History Folder Users Guide Zigler	Mayo	SAI	(Knauts)
2-15	NSAC-24	01/81	TMI Accident Core Heatup Analysis	K. Adron	EPRI	
2-16	GEND-016	05/81	Accountability Study for TMI-2 Fuel	P. Goris D. D. Scott	HEDL	MLR
2-17	GEND-007	05/81	Three Mile Island Unit 2 Core Status Summary A Basis for Tool Development for Reactor Disassembly and Defueling	D. W. Croucher	EG&G	MLR
2-18	NSAC-25	06/81	TMI-2 Accident Core Heat-up Analysis A Supplement	D. Coleman C. Shaffer	NAI EI	MLR
2-19	TPO/TMI-005	06/81	Technical Plan for Reactor Disassembly and Defueling	Unidentified	BNI	MLR
2-20	No Number	08/81	Characterization of TMI-2 Postaccident Primary Coolant	J. E. Cline, et al.	SAI	
2-21	Twelfth Information Meeting on Reactor Noise Accident Analysis	10/81	Postaccident Reactor Diagnostics at TMI-2	Mayo	B&W?	(Knauts)
2-22	GEND-17	12/81	Analysis of the SPND Measurement System Response to Temperature During TMI-2 Accident	N. Wilde J. L. Morrison, Jr.	EG&G	
2-23	GEND-INF-017-7	01/82	Field Measurements and Interpretation of TMI-2 Instrumentation: YM-AMP-7023 and 7025 (loose parts monitor)	Jones, et al.	TEC	(Knauts)
2-24	GEND-INF-017-11	04/82	Field Measurement and Interpretation of TMI-2 Instrumentation: NI-Amp-2 (source range amplifier)	Jones, et al.	TEC	(Knauts)
2-25[c]	NSAC-28	05/82	Interpretation of TMI-2 Instrument Data CEI, ORNL, TEC & NSAC)	Numerous (from B&W,	NSAC	MLR
2-26	ANS WAM Trans. Volume 43 (p. 5)	11/82	TMI-2 Core Examination: First Results	D. E. Owen M. R. Martin	EG&G	

TMI-2 ACCIDENT EVALUATION PROGRAM SAMPLE ACQUISITION AND EXAMINATION REFERENCE DOCUMENTATION LIST--PRELIMINARY (December 1987)

Information[a] Category	Report Number	Publication Date	Title	Author Name	Author Company[b]	SA&E[d] Custodian
2-27	GEND-20	11/82	Examination Results on TMI-2 LPM Charge Converters YM-AMP-7023 & 7025			
2-28	SAI-139-83-01-RV	12/82	Analysis of Three Sections of TMI-2 H-8 Leadscrew by Collimated Gamma Spectroscopy	J. A. Daniel, et al.	SAI	
2-29	TPO/TMI-026	12/82	Quick Look Inspection Results		GPUN	
2-30	GEND-INF-031 ED-E3-82-015	01/83	Preliminary Report of TMI-2 In-Core Instrument Damage	M. E. Yancey N. Wilde	EG&G EG&G	MLR
2-31	Idcor Task-15	01/83	Final Report on Debris Coolability, Vessel Penetration and Debris Dispersal		FAI	
2-32	EGG-TMI-5966	02/83	TMI-2 Core Examination Program: INEL Facilities Readiness Study	T.B. McLaughlin	EG&G	MLR
2-33	NUS-TM-46	03/83	TMI-2 Preliminary Plenum Surface Area and Estimated Cesium Retention	D. W. Tonkay	NUS	
2-34	GEND-30, Volume I	04/83	TMI-2 Quick Look and CRDM Uncoupling			
2-35	GEND-30, Volume II	04/83	Quick Look Inspections: Results			
2-36	GEND-INF-038	04/83	An Assessment of the TMI-2 Axial Power Shaping Rod Dynamic Test Results	R. W. Garner, et al.	EG&G	MLR
2-37	LWR Severe Accident Meeting-Cambridge, MA	08/83	TMI-2 Core Examination	R.R. Hobbins, et al.	EG&G	
2-38	GEND-INF-023 Volume V	09/83	Analysis of TMI-2 Reactor Coolant System Transients	J. O. Henrie		
2-39	4550-83-0412	09/83	TMI-2 Core Radial and Axial Power History Data	G. R. Eidam	GPUN	
2-40	TPO/TMI-097 SAI-83/1083	11/83	Analyses of the H-8, B-8 and E-9 Leadscrews from the TMI-2 Reactor Vessel	J. A. Daniel, et al.	SAI	MLR MLR
2-41	TPO/TMI-102	12/83	Planning Study on Method for Measuring Fuel Materials Collected in Lower Region of Reactor Vessel		GPUN-TPO	
2-42	TPO/TMI-080	12/83	Planning Study on Plenum Disposal		GPUN	
2-43	GEND-INF-062	00/84	TMI-2 Reactor Vessel Head Removal	P. R. Bengel, et al.	GPUN	
2-44[c]	EPRI-NP-3407	01/84	Initial Examination of the Surface Layer of a 9-Inch Leadscrew Section Removed from TMI-2	G. M. Bain G. O. Hayner	B&W	MLR
2-45	No Number	01/84	The Sequence of Core Damage in TMI-2 (Accident Review Workshop at Harrisburg, PA	M. L. Picklesimer		
2-46	TPO/TMI-103	02/84	Chemical Analyses and Test Results of Sections of the TMI-2 H8 Leadscrew	K. J. Hofstetter, et al.	GPUN	
2-47	EGG-TMI-6531-1	03/84	TMI-2 Core Debris Grab Sample Quick Look Report	D. W. Akers R. L. Nitschke	EG&G EG&G	MLR
2-48	GEND-INF-031 Volume II	04/84	TMI-2 In-Core Instrument Damage--An Update	M. E. Yancey, et al.	EG&G	MLR
2-49	GEND-INF-044	04/84	TMI-2 Leadscrew Debris Pyrophoricity Study	R. L. Clark, et.al.	PNL	MLR
2-50	GEND-INF-012	05/84	Design and Operation of the Core Topography Data Acquisition System for TMI-2	L. S. Beller H. L. Brown	EG&G EG&G	MLR
2-51	NP-3509	06/84	Use of Pressurized Water to Decontaminate TMI-2 Leadscrew Sections	H. R. Gardner Pr. Inv.	Quadrex	MLR
2-52	EGG-TMI-6630	06/84	Draft Preliminary Report: TMI-2 Core Debris Grab Samples--Analysis of First Group of Samples	D. W. Akers, et al. B. A. Cook	EG&G EG&G	MLR

TMI-2 ACCIDENT EVALUATION PROGRAM SAMPLE ACQUISITION AND EXAMINATION REFERENCE DOCUMENTATION LIST--PRELIMINARY (December 1987)

Information[a] Category	Report Number	Publication Date	Title	Author Name	Author Company[b]	SAAE[d] Custodian
2-53	ANS Top. Meeting on FP Behavior and Source Term Research	07/84	TMI-2 Leadscrew Radionuclide Deposition and Characterization	K. Vinjamuri, et al.	EG&G	
2-54[c]	RDD:85-5097-01-01	07/84	TMI-2 HBA Core Debris Sample Examination--Final Report	G. D. Hayner	B&W	MLR
2-55[c]	EGG/TIO-M-00284	07/84	Radionuclide Distribution in TMI-2 Reactor Building Basement Liquids and Solids	J. T. Moran	EG&G	MLR
2-56[c]	EGG-M-11984	08/84	TMI-2 Core Debris Analytical Method and Results	D. W. Akers	EG&G	MLR
2-57	EGG-TMI-6697	09/84	Draft Report: TMI-2 Core Debris--Cesium Release/Settling Test	D. W. Akers D. A. Johnson	EG&G	MLR
2-58	NUS-TMI-3467	09/84	TMI-2 Preliminary Plenum Surface Areas and Estimated Cesium Retentions	D. W. Tokay	NUS	
2-59	Twelfth NRSR Meeting	10/84	TMI-2 Core Debris Sample Analysis	B. A. Cook D. W. Akers	EG&G	
2-60	No Number	10/84	Mechanisms for Anomolous Signal Outputs from Self-Powered Neutron Detectors	C. P. Cannon	HEDL	
2-61[c]	TPB-84-2	11/84	Results of End Fitting Separation in Preparation for Plenum Jacking	V. R. Fricke	GPUN	MLR
2-62[c]	TB-84-1	11/84	Plenum Inspection Results	V. R. Fricke	GPUN	MLR
2-63	BAW-1855	12/84	TMI-2 Planning Study for Core Support Assembly Defueling	TBD	B&W	
2-64	TPB-84-7	12/84	Plenum TLD Data	F. Augustine	GPUN	MLR
2-65[c]	TPB-84-8	12/84	Core Debris Bed Probing	V. R. Fricke	GPUN	MLR
2-66[c]	0362-1626/85/1022-0035 Annual Rev. Energy 1985 10:35-52	00/85	The Three Mile Island Unit 2 Core: A Postmortem Examination	R. S. Denning	BCL	MLR
2-67	TPB-85-5	02/85	Source Term (Radiological Characterization of Fuel Debris Grab Samples)	R. Rainisch	GPUN	MLR
2-68[c]	TPB-85-6	02/85	Reactor Lower Head Video Inspection	V. R. Fricke	GPUN	MLR
2-69[c]	TPB-84-8 Rev. 1	02/85	Core Debris Bed Probing	V. R. Fricke	GPUN	MLR
2-70	TPB 85-6 Rev. 1	03/85	Reactor Lower Head Video Inspection	[illegible]	GPUN	
2-71	NACE'S Symposium Corrosion 85	03/85	Initial Examination of Decontamination Barrier on TMI-2 Leadscrew	V. F. Baston	GPUN	
2-72	DGK-5-85 (Letter)	04/85	In-Core Instruments Tube Probing	D. G. Keefer	EG&G	MLR
2-73	TPO/TMI-165	04/85	Determination of Fuel Distribution in TMI-2 Based on Axial Neutron Flux Profile	A. J. Baratta B. Bendini	PSU	
2-74	TPB-85-11	04/85	Gamma Scanning of In-Core Detectors		GPUN	
2-75	GEND-INF-059 HEDL-7484	05/85 04/85	Solid-State Recorder Neutron Dosimetry	R. Gold, et al.	HEDL	MLR MLR
2-76	GEND-INF-060 Volume II	05/85	TMI-2 HBA Core Debris Sample Examination Final Report	G. D. Hayner	B&W	
2-77	(ACS Symposium)	05/85	TMI-2 Core Debris Chemistry and Fission Product Behavior	D. W. Akers	EG&G	MLR
2-78[c]	TPO/TMI-175	06/85	Analysis of Gamma Scanning of In-Core Detector #18 (L-11) in Lower Reactor Vessel Head	R. Rainisch	GPUN	MLR
2-79	TPB-85-14	06/85	Analysis of Gamma Scanning of In-Core Detector #18 (L-11) in the Lower Reactor Vessel Head	R. Rainisch	GPUN	MLR

TMI-2 ACCIDENT EVALUATION PROGRAM SAMPLE ACQUISITION AND EXAMINATION REFERENCE DOCUMENTATION LIST--PRELIMINARY (December 1987)

Information[a] Category	Report Number	Publication Date	Title	Author Name	Author Company[b]	SA&E[d] Custodian
2-80[c]	TPB-85-015	06/85	Plenum Underside Damage	G. Worku	GPUN	MLR
2-81[c]	TPB-85-015	06/85	Plenum Underside Damage	G. Worku	GPUN	MLR
2-82	EGG-TMI-6853 Parts 1 and 2	07/85	Draft Report: TMI-2 Core Debris Grab Samples--Examination and Analysis	D. W. Akers, et al.	EG&G	MLR
2-83	GEND-INF-060 Volume 1	07/85	Preliminary Report: TMI-2 Core Debris Grab Samples--Analysis of First Group of Samples	D. W. Akers, et al.	EG&G	MLR
2-84	TPB-85-20	07/85	Hydraulic Disturbance of the Debris in the Bottom Head of the TMI-2 Reactor Vessel	V. R. Fricke	GPUN	MLR
2-85	TB 85-21 Rev. 0	07/85	Core Debris Sample Retrieval from the Lower Head Region	G. Worku	GPUN	
2-86[c]	TPB-85-19	08/85	Core Condition Summary	F. Augustine	GPUN	MLR
2-87[c]	RE-E-85-004	08/85	Reevaluation and Analysis of the TMI-2 Core Damage Sequence	D. J. N. Taylor	EG&G	MLR
2-88	TB 85-23 Rev. 0	08/85	Reactor Vessel Lower Head Video Inspection	S. Bokharee	GPUN	MLR
2-89	RE-E-85-005	09/85	Laboratory Testing of TMI-2 Self-Powered Neutron Detector	D. J. N. Taylor	EG&G	
2-90	TPO/TMI-138 Rev. 1	09/85	Data Report-Reactor Characterization Vol. 1		GPUN	
2-91	GEND-INF-052 EGG-TMI-6685	09/85	Examination of H8 and B8 Leadscrews from Three Mile Island Unit 2 (TMI-2)	K. Vinjamuri, et al.	EG&G	MLR
2-92[c]	GEND-044	09/85	TMI-2 Reactor Vessel Head Removal	P. R. Bengel, et al.	GPUN	MLR
2-93[c]	TPO/TMI-117 Rev. 1	09/85	In-Vessel Data Acquisition Technical Plan	T. L. Ott J. A. Weissburg	GPUN	MLR
2-94[c]	TB-85-21 Rev. 1	10/85	Lower Head Core Debris Samples	G. Worku	GPUN	MLR
2-95	ANS Winter Meeting Trans. TANSA050	10/85	A Comparison of TMI-2 and Laboratory Results for Cesium Activity Retained on Reactor Mat'l surfaces	V. F. Baston et al.	GPUN	
2-96	(ANS Winter Meeting)	11/85	TMI-2 Core Conditions and Postulated Accident Scenario	J. M. Broughton, et al.	EG&G	
2-97	(ANS Winter Meeting)	11/85	Elemental and Radionuclide Content of TMI-2 Core Debris Grab Samples	D. W. Akers R. R. Hobbins	EG&G	MLR
2-98	ANS Winter Meeting Trans. (pp. 217-219)	11/85	Analysis of Damage Potential to the TMI-2 Lower Head by Core Debris	A. W. Cronnenberg et al.	ESA EG&G	
2-99	ANS Winter Meeting	11/85	Gamma Scanning of the TMI-2 Lower Reactor Vessel Head via In-core Detectors	R. Rainisch et al.	GPUN	
2-100	ANS Winter Meeting	11/85	Characterization of TMI-2 Core Debris Materials	E. R. Carlson B. A. Cook	EG&G	
2-101[c]	Corrosion/85, Paper #120, NACE, Houston, TX	12/85	Examination of Core Debris Samples from the Three Mile Island Unit 2 Reactor	G. O. Hayner, et al.	B&W	MLR
2-102	TB 85-21 Rev. 2	12/85	Lower Head Core Debris Samples (A supplement to 85-21 Rev. 0 and 1)	???	GPUN	
2-103	NP-4292	01/86	Simulation of the TMI-2 Accident Using the MAAP Modular Accident Analysis Program Version 2.0	M. A. Kenton, et al.	FAI	MLR[d]

TMI-2 ACCIDENT EVALUATION PROGRAM SAMPLE ACQUISITION AND EXAMINATION REFERENCE DOCUMENTATION LIST--PRELIMINARY (December 1987)

Information Category[a]	Report Number	Publication Date	Title	Author: Name	Author: Company[b]	SA&E[d] Custodian
2-104[c]	GEND-INF-073	01/86	TMI-2 Defueling Tools Engineering Report	Not Identified	B-HARD	MLR
2-105[c]	TB-86-004	01/86	Visual Examination of the Core Void Periphery	G. Worku	GPUN	MLR
2-106[c]	TPO/TMI-173	01/86	TMI-2 Reactor Vessel Plenum Final Lift-Data Report	D. C. Wilson	GPUN	
2-107	RB 86-3 Rev. 0	01/86	Reactor Vessel Lower Head Video Inspection	D. E. Owen	GPUN	MLR
2-108	GEND-054	01/86	TMI-2 Reactor Vessel Plenum Final Lift	D. D. Wilson	GPUN	
2-109[c]	TB-86-01 Rev. 1	02/86	Fuel Rod Segment Sampling	G. Worku	GPUN	MLR
2-110[c]	TMI-86-001 (Draft)	02/86	TMI-2 Self-Powered Neutron Detector Data Interpretation	D. J. N. Taylor	EG&G	MLR
2-111	EGG-TMI-7174	03/86	TMI-2 Source and Intermediate Range Neutron Flux Monitors Data Report	R. D. McCormick	EG&G	MLR
2-112[c]	GEND-INF-067	03/86	Final Report on the Examination of the Leadscrew Support Tube from Three Mile Island Reactor Unit 2	M. P. Failey, et al.	BCL	MLR
2-113	EGG-TMI-7150	03/86	TMI-2 Core Debris Bed Coolability	P. Kuan	EG&G	
2-114	Progress in Nuclear Energy, Vol. 17, No. 2 pp. 141-174	04/86	Reactor Disassembly Activities at Three Mile Island	M. M. Burton R. L. Freemerman	EG&G BNI	MLR
2-115	No number?	04/86	Extended Analysis of Source Range Monitor to Evaluate Core Relocation During the TMI-2 Accident	A. J. Baratta H. Y. Wu	PSU	
2-116	TB-84-08 Rev. 2	04/86	Core Debris Bed Probing	G. Worku	GPUN	MLR
2-117	TB-85-19 Rev. 1	04/86	Core Conditions Summary	?	GPUN	
2-118	No number	04/86	Extended Analysis of Source Range Monitor to Estimate	A. J. Baratta	PSV	
2-119[c]	TB-85-21 Rev. 3	05/86	Lower Head Core Debris Samples	G. Worku	GPUN	MLR
2-120[c]	TB-86-33 Rev. 0	06/86	Dewatering Canisters in Preparation for Offsite Shipment	R. Rainisch	GPUN	MLR
2-121	EGG-TMI-7222	06/86	Assessment and Damage Potential to the TMI-2 Lower Head Due to Thermal Attack by Core Debris	A. W. Cronnenberg et al.	ESA EG&G	MLR
2-122[c]	TB-86-35 Rev. 0	07/86	Core Stratification Sampling Program	G. Worku	GPUN	MLR
2-123[c]	TB-86-35 Rev. 1	07/86	Core Stratification Sampling Program	G. Worku	GPUN	MLR
2-124[c]	TB-86-35 Rev. 2	07/86	Core Stratification Sampling Program	G. Worku	GPUN	MLR
2-125[c]	TB-86-35 Rev. 3	08/86	Core Stratification Sampling Program	G. Worku	GPUN	MLR
2-126[c]	RDD:86:522-01:01	08/86	TMI-2 HBA Core Debris Melting Point Study R. E. Womack	G. D. Hayner	B&W	MLR
2-127	TB 86-12 Rev. 3	08/86	Defueling Canisters Transfer Log	???	GPUN	MLR
2-128[c]	TB-86-33 Rev. 1	09/86	Dewatering Canisters in Preparation for Offsite Shipment	R. Rainisch	GPUN	MLR
2-129	GEND-INF-075 Parts 1 and 2	09/86	TMI-2 Core Debris Grab Samples--Examination and Analysis	D. W. Akers, et al.	EG&G	MLR
2-130[c]	EGG-M-27786 ACS Symposium	09/86	Insights on Severe Accident Chemistry from TMI-2	R. R. Hobbins et al.	EG&G	MLR
2-131[c]	TB-86-39	10/86	Estimated Specific Activities and Radionuclide Inventories of Neutron Activated RPV Internal Components	R. Rainisch	GPUN	MLR

TMI-2 ACCIDENT EVALUATION PROGRAM SAMPLE ACQUISITION AND EXAMINATION REFERENCE DOCUMENTATION LIST--PRELIMINARY (December 1987)

Information[a] Category	Report Number	Publication Date	Title	Author Name	Author Company[b]	SA&E[d] Custodian
2-132[c]	TB-86-42	10/86	Results of the October, 1986 Core Void Region Video Inspection	V. R. Fricke	GPUN	MLR
2-133[c]	TB-85-19 Rev. 2	10/86	Core Conditions Summary	G. Worku	GPUN	MLR
2-134[c]	ANL-E Letter Dated 10/01/86	10/86	Results of Auger and Microprobe Examinations of Five Samples Taken from TMI-2 Upper Plenum	J. E. Sanecki	ANL-E	RKM
2-135[c]	TB-86-42	10/86	Results of the October 1986 Core Void Region Video	V. R. Fricke	GPUN	MLR
2-136[c]	TB 85-19 Rev. 2	10/86	Core Conditions Summary	G. Worku	GPUN	MLR
2-137	ANL-E Letter dated 10/01/86	10/86	Results of Auger and Microprobe Examinations of Five Samples taken from TMI-2 Upper Plenum	J. E. Sanecki	ANL-E	RKM
2-138[c]	EGG-M-31786 (ANS/ENS Topical Meeting)	10/86	Characteristics of Severely Damaged Fuel from PBF Tests and the TMI-2 Accident	D. J. Osetek et al.	EG&G	MLR
2-139[c]	14th WRSR Meeting	10/86	Preliminary Results of the TMI-2 Core Bores	R. K. McCardell et al.	EG&G	
2-140	EGG-M-30086 14th WRSR Meeting	10/86	TMI-2 Accident Scenario Update	E. L. Tolman et al.	EG&G	
2-141[c]	TB-86-43 Rev. 0	11/86	Impact of Core Drilling Operations on Defueling Platform Dose Rates (also RCS coolant conditions)	R. Rainisch	GPUN	MLR
2-142[c]	EGG-TMI-7402	11/86	Core Relocation in the TMI-2 Accident	P Kuan	EG&G	MLR
2-143[c]	TB-86-45	12/86	Crust Breaking Via Core Drilling	S. Bokharee	GPUN	MLR
2-144[c]	TB 86-33 Rev.2	12/86	Dewatering Canisters in Preparation for Offsite Shipment	R. Rainisch	GPUN	MLR
2-145[c]	EGG-TMI-7489	12/86	TMI-2 Accident Scenario Update	E. L. Tolman et al.	EG&G	MLR
2-146[c]	TB 86-33 Rev. 3	01/87	Dewatering Canisters in Preparation for Offsite Shipment	R. Rainisch	GPUN	MLR
2-147[c]	GEND-INF-074	02/87	TMI-2 Core Cavity Sides and Floor Examinations	M. L. Russell	EG&G	MLR
2-148[c]	TB 86-33 Rev. 4	02/87	Dewatering Canisters in Preparation for Offsite Shipment	R. Rainisch	EG&G	MLR
2-149[c]	TB 84-08 Rev. 3	02/87	Contour Map and Debris Bed as of February 8,, 1987	V. R. Fricke	GPUN	MLR
2-150[c]	TB 87-02 Rev. 0	02/87	Description of Standing Fuel Assemblies (as of February 1987)	D. E. Owen	GPUN	MLR
2-151[c]	TB 86-12 Rev. 4	02/87	Defueling Canisters Transfer Log	R. Rainisch	GPUN	MLR
2-152	EGG-TMI-7385 Rev. 1	02/87	TMI-2 Core Bore Acquisition Summary Report	E. L. Tolman et al.	EG&G	MLR
2-153[c]	TB 87-4 Rev. 0	03/87	Fiberscope Inspection Inside CSA	V. R. Fricke	GPUN	MLR
2-154[c]	TB 86-03 Rev. 1	03/87	Reactor Vessel Lower Head Video Inspection Phase II	G. Worku	GPUN	MLR
2-155[c]	TB-86-33 Rev. 5	03/87	Dewatering Canisters in Preparation for Offsite Shipment	R. Rainisch	GPUN	MLR
2-156[c]	TB-87-3 Rev. 0	03/87	Surface Condition of Debris Bed	M. Tanaka	GPUN	MLR
2-157[c]	TB-87-6 Rev. 0	03/87	Impacts of Core Drilling Operations on Reactor Vessel Lower head Rubble Inventory	R. Rainisch	GPUN	MLR
2-158[c]	TB-86-33 Rev. 6	04/87	Dewatering Canisters in Preparation for Offsite Shipment	R. Rainisch	GPUN	MLR

TMI-2 ACCIDENT EVALUATION PROGRAM SAMPLE ACQUISITION AND EXAMINATION REFERENCE DOCUMENTATION LIST--PRELIMINARY (December 1987)

Information[a] Category	Report Number	Publication Date	Title	Author Name	Author Company[b]	SA&E[d] Custodian
2-159[c]	EGG-TMI-7573 GEND-INF-084	04/87	Examination of Debris from the Lower Reactor Head of the TMI-2 Reactor (draft)	C. S. Olsen et al.	EG&G	RLR
2-160[c]	TB 87-10 Rev. 0	05/87	Tabulation of Stub Lengths for Defueling	V. R. Fricke	GPUN	RLR
2-161[c]	TB-87-10 Rev. 1	05/87	Tabulation of Stub Lengths for Defueling	V. R. Fricke	GPUN	RLR
2-162[c]	TB 87-09 Rev. 0	05/87	Fuel Debris in Region Between Core former Baffle Plates and Core Barrel	S. Bokharee	GPUN	RLR
2-163[c]	TB 87-11 Rev. 0	05/87	Conditions in the Reactor Vessel Lower Head	G. Worku	GPUN	RLR
2-164[c]	TB 87-17	05/87	Highlights of Recent Defueling Activities	V. R. Fricke	GPUN	RLR
2-165[c]	TB 01-87	05/87	TMI-2 Lower Vessel Debris Examinations	D. W. Akers et al.	EG&G	RLR
2-166	TB 87-19 Rev 0	06/87	Updated Core Region Condition as of May 27, 1987	M. Tanaka	GPUN	RLR
2-167[c]	TB 86-33 Rev. 7	06/87	Dewatering Canisters in Preparation for Offsite Shipment	R. Rainisch	GPUN	RLR
2-168[c]	TB 87-09 Rev. 1	07/87	Fuel Debris in Region Between Core former Baffle Plates and Core Barrel	S. Bokharee	GPUN	RLR
2-169[c]	EGG-TMI-7429	07/87	TMI-2 Lower Plenum Video Data Summary	J. P. Adams R. P. Smith	EG&G	RLR
2-170[c]	TB 86-12 Rev. 5	07/87	Defueling Canisters Transfer Log	R. Rainisch	GPUN	RLR
2-171[c]	TB 85-21 Rev. 4	07/87	Additional Results of Lower Head Debris Samples	G. Worku	GPUN	RLR
2-172[c]	TB 87-15 Rev. 0	07/87	Lower CSA REgion	S. Bokharee	GPUN	RLR
2-173[c]	TB 87-21 Rev. 0	08/87	Conditions in the Reactor Vessel (A Summary)	G. Worku	GPUN	RLR
2-174[c]	TB 87-33 Rev. 8	08/87	Dewatering Canisters in Preparation for Offsite Shipment	R. Rainisch	GPUN	RLR
2-175	ANL-E Letter dated	08/87	Results of Microexamination of Samples from the TMI-2 Lower Plenum	R. V. Strain et al.	ANL-E	RLR
2-176[c]	GEND-INF-087	08/87	TMI-2 Standing Fuel Rod Segments Preliminary Examination Report	D. W Akers M. L. Russell	EG&G	RLR
2-177[c]	GEND-INF-082	09/87	Examination of the TMI-2 Core Distinct Components	S. M. Jensen et al.	EG&G	RLR
2-178[c]	TB 87-29 Rev. 1	09/87	A Summary of Defueling Accomplishments, Expenditures, and Performance	R. Rainisch	GPUN	RLR
2-179[c]	TB 86-33 Rev. 9	09/87	Dewatering Canisters in Preparation for Offsite Shipment	R. Rainisch	GPUN	RLR
2-180[c]	EGG-TMI-7789	09/87	Assessment of Uncertainty in Volume of Prior Molten Zone Based Upon Borehole Video Data: TMI-2 Reactor Core	R. P. Smith	EG&G	RLR
2-181[c]	EGG-TMI-7785	09/87	Assessment of TMI-2 I and Cs Chemistry During Core Degradation	A. W. Cronenberg	ESA	RLR
2-182[c]	No number	10/87	TMI-2 Core Bore Examination Results	C. S. Olsen	EG&G	RLR
2-183[c]	1987 MRSR Meeting	10/87	Microstructural and Microchemical Characterization of Samples from the TMI-2 Core	L. A. Neimark et al.	ANL-E	RLR
2-184[c]	GEND-INF-083	10/87	RMI-2 Core Horseshoe Ring Examinations	M. L. Russell	EG&G	RLR
2-185[c]	TB 87-15 Rev. 1	10/87	Lower CSA Region	V. R. Fricke	GPUN	RLR
2-186[c]	SNM-87-07	10/87	Reactor Plenum Assembly SNM Accountability Summary	K. D. Auclair	GPUN	RLR
2-187[c]	TB 86-12 Rev. 6	11/87	Defueling Canisters Transfer Log	R. Rainisch	GPUN	RLR

TMI-2 ACCIDENT EVALUATION PROGRAM SAMPLE ACQUISITION AND EXAMINATION REFERENCE DOCUMENTATION LIST--PRELIMINARY (December 1987)

Information Category[a]	Report Number	Publication Date	Title	Author Name	Author Company[b]	SA&E[d] Custodian
3-1[c]	NPGD-TM-557	07/80	Compilation of Chemistry Results for TMI-2 Reactor Coolant System	J. H. Hicks	B&W	MLR
3-2	ANL/LWR/SAF 80-4	10/80	Analysis of Thermal-Hydraulic Behavior During TMI-2 LOCA	J. C. M. Leung	ANL	
3-3	No Number	09/81	Characterization of TMI Unit 2 Postaccident Primary Coolant	J. E. Cline, et al.	SAI	
3-4	GEND-018	11/81	Nondestructive Techniques for Assaying Fuel Debris in Piping at Three Mile Island Unit 2	K. Vinjamuri, et al.	EG&G	MLR
3-5	Nuclear Engineer Design 69	00/82	Post Facta Analysis of the TMI-2 Accident (1): Analysis of Thermal-Hydraulic Behavior by Use of RELAP4/MOD6/V4/J2	F. Tanabe, et al.	?	
3-6	GEND-INF-017-5	01/82	Field Measurements and Interpretation of TMI-2 Instrumentation CF-2-LT2 (Flood Tank Level)	Jones, et al.	EG&G	(Knauts)
3-7	GEND-INF-017-4	01/82	Field Measurements and Interpretation of TMI-2 Instrumentation CF-2-LT4	Jones, et al.	TEC	(Knauts)
3-8	GEND-INF-026	08/82	Static In Situ Testing of Axial Power Shaping Rod and Shim Safety Control Rod Mechanisms	Soberano, et al.	UE&C	(Knauts)
3-9[c]	GEND-INF-024	11/82	Review of TMI-2 Resistance Temperature Detectors, Accident Data and In Situ Testing	J. W. Mock	?	MLR
3-10[c]	EPRI-NP-2722	11/82	Characterization of the Contamination in the TMI-2 Reactor Coolant System	J. C. Cunnane S. L. Nicolosi	BCL	
3-11[c]	EPRI-NP-2628-SR	12/82	EPRI Safety and Relief Valve Test Program: Safety Relief Valve Test Report	???	EPRI	
3-12[c]	No Number	03/83	Report on Analysis of Two TMI-2 'Quick-Look' RCS Fluid Samples	T. L. Hardt J. E. Bullard	GPUN	MLR
3-13[c]	ORNL-AMS8304RI Volume II	09/83	Status of TMI-2 Primary RTDs During and After the Accident	H. M. Hashemian K. E. Holbert	A&MS A&MS	MLR
3-14[c]	TPO/TMI-051	04/84	Planning Study and Characterization of Fuel Debris in TMI-2 (Reactor Coolant System)	S. A. Bokharee	GPUN	MLR
3-15[c]	TPO/TMI-124	08/84	Ex-Vessel Fuel Characterization	S. A. Bokharee	GPUN	MLR
3-16	EPRI-NP-3804	11/84	Gamma-Ray Spectrometer System for High-Radiation Fields	G. R. Laurer, et al.	NYU-MC	MLR
3-17	Hmb-268-84 (Letter) GEND-INF-014 (not published)	11/84	Analysis of TMI-2 "A" Steam Generator Hot Leg Resistance Thermal Detector	D. W. Akers, et al.	EG&G	MLR
3-18	TPB-84-5	12/84	OTSG "A" External Measurements	C. H. Distenfeld	GPUN	MLR
3-19	TPB-84-6	12/84	Ex-Vessel Fuel Generic Survey Results	C. H. Distenfeld	GPUN	MLR
3-20	Letter	12/84	List of Materials Wetted by the Reactor Coolant System at TMI-2	E. J. Bateman L. H. Lilien	B&W GPUN	
3-21	Nucl. Technology, 69	00/85	Circulation Within the Primary System at TMI-2 with Lowered Coolant Level and Atmospheric Conditions	V. F. Baston et al.	PSI	
3-22	TPO/TMI-122	01/85	Reactor Coolant System Sample Results	C. S. Orland P. M. Holt	GPUN GPUN	MLR
3-23	TPB-85-7	02/85	Fuel Deposition in the "B" Core Flood Tank System	C. H. Distenfeld	GPUN	MLR
3-24	No Number	03/85	Reactor Coolant System Debris Transport		MPR	
3-25	DGK-10-85 (Letter)	05/85	Status of Primary Systems Gamma Scans	D. G. Keefer	EG&G	MLR

TMI-2 ACCIDENT EVALUATION PROGRAM SAMPLE ACQUISITION AND EXAMINATION REFERENCE DOCUMENTATION LIST -PRELIMINARY (December 1987)

Information[a] Category	Report Number	Publication Date	Title	Author: Name	Author: Company[b]	SA&E[d] Custodian
3-26	ACS Symposium	05/85	Thermal Hydraulic Features of the TMI Accident	E. L. Tolman	EG&G	
3-27	4550-85-0197 (Letter)	07/85	"A" D-Ring Gamma Camera Scans	C. H. Distenfeld	GPUN	MLR
3-28	TPB-85-018	07/85	"A" D-Ring Gamma Camera Scans	J. Greenborg	GPUN	MLR
3-29[c]	GEND-INF-064 ORNL/M-98[d]	09/85	Postaccident Examination of Platinum Resistance Thermometers Installed in the TMI-2 Reactors	R. M. Carroll R. L. Shepard (R. C. Strahm, App III	ORNL ORNL EG&G	MLR
3-30	STC-08-85 (Letter)	09/85	TMI Gamma Spectral Data from Primary System Scanning Measurements	S. T. Croney	EG&G	MLR
3-31[c]	TB-85-37	11/85	RCS Contamination Radiation Model	A. Yahashi	GPUN	MLR
3-32[c]	TB-86-02	01/86	Physical/Radiological Inspection and Sampling of the Pressurizer	H. P. Wood	GPUN	MLR
3-33	EGG-TMI-7100	01/86	Analysis of TMI-2 Pressurizer Level Indications	J. L. Anderson	EG&G	MLR
3-34[c]	NP-4292	01/86	Simulation of the TMI-2 Accident Using the MAAP Modular Accident Analysis Program Version 2.0	M. A. Kenton, et al.	FAI	MLR[d]
3-35[c]	TB-86-13	02/86	Gamma Analysis of Pressurizer Sample	T. E. Cox	GPUN	MLR
3-36[c]	TB-86-16	03/86	Alpha Measurements and Surface Scrape Samples of Pressurizer Manway Diaphragm	M. Lambert	GPUN	MLR
3-37[c]	TB-86-19	03/86	Analysis of TLD String Drop Data--Pressurizer Internal Surfaces	A. Yahashi	GPUN	MLR
3-38[c]	TB-86-24	04/86	OTSG-A Upper Tube Sheet Debris Samples	P. J. Babel	GPUN	MLR
3-39[c]	TB-86-23	04/86	Examination of "A" & "B" Steam Generators for Dislocated Fuel	H. P. Wood	GPUN	MLR
3-40[c]	Nuclear Technology, 73, 125	04/86	Antimony Telluride Formation Hypothesized from Reactor Coolant System Sample Data	V. R. Baston K. J. Hofstetter	GPUN	
3-41[c]	ACS Symp. Series 293	08/86	Adherent Activity on TMI-2 Internal Surfaces	V. F. Baston K. J. Hofstetter	GPUN	MLR
3-42[c]	TB-85-10a	08/86	A Reevaluation of Fuel in the Pressurizer	C. H. Distenfeld	GPUN	MLR
3-43	No Number	08/86	Preliminary Compilation of TMI-2 Water Processing Reference Data	V. F. Baston	PSI	MLR
3-44[c]	TB-86-37	09/86	Deposition of Fuel on the Inside Surfaces of the RCS	J. Greenborg	GPUN	MLR
3-45	PSI-TR-86/011	09/86	Chemical Behavior of Selected Radionuclides in the TMI-2 Reactor Coolant System Fluid	V. F. Baston	PSI	MLR
3-46[c]	EGG-TMI-7324	09/86	Determination of Void Fraction from Source Range Monitor and Mass Flow Rate Data	R. D. McCormick	EG&G	MLR
3-47[c]	TB-86-44	11/86	"B" Steam Generator Tube Sheet Fuel Estimate	J. Greenborg	GPUN	MLR
3-48[c]	TB-86-49	12/86	Impacts of Core Drilling on the Reactor Coolant System	R. Rainisch	GPUN	MLR
3-49[c]	Letter PK-15-86	12/86	Study of Pressurizer Outflow to the Containment During the TMI-2 Accident	P. Kuan	EG&G	MLR
3-50[c]	EGG-TMI-7359	12/86	TMI-2 Once-through Steam Generator Secondary Level Analyses	J. L. Anderson	EG&G	MLR
3-51[c]	EGG-TMI-7481	12/86	TMI-2 Once-through Steam Generator Auxiliary Feedwater Injection Rates	J. L. Anderson	EG&G	MLR
3-52[c]	EGG-TMI-7482	12/86	Steam Generator Secondary Side Effects Upon Primary Side Thermal Hydraulics During the TMI-2 Accident	J. L. Anderson	EG&G	MLR

TMI-2 ACCIDENT EVALUATION PROGRAM SAMPLE ACQUISITION AND EXAMINATION REFERENCE DOCUMENTATION LIST--PRELIMINARY (December 1987)

Information Category[a]	Report Number	Publication Date	Title	Author Name	Author Company[b]	SA&E Custodian[d]
3-53[c]	Anal. Rpt. 12706	12/86	TMI-2 Pressurizer Debris-Phase 1-Basic Examination and Particle Size Distribution	L. Kardos	W	MLR
3-54[c]	TB 87-07 Rev. 0	04/87	Sampling and Estimating Sediment Volume in "B" Hot Leg and Attached Decay Heat Line	H. P. Wood	GPUN	MLR
3-55[c]	TB 87-08 Rev. 0	04/87	Sampling and Estimating Sediment Volume in Casing of Reactor Coolant Pumps and Discharge lines	H. P. Wood L. Kardos	GPUN	MLR
3-56[c]	No number	04/87	Analysis of Debris from the TMI-2 Pressurizer	C. A. Blackburn	W	MLR
3-57[c]	EGG-TMI-7703	05/87	Electromatic Relief Valve Flow and Primary System Hydrogen Storage During the TMI-2 Accident	P. Kuan E. L. Tolman	EG&G	MLR
3-58[c]	TB 86-44 Rev. 1	06/87	"B" Steam Generator Tube Sheet Fuel Estimate	C. H. Distenfeld	GPUN	MLR
3-59[c]	BCD Letter to M. L. Russell	08/87	Nondestructive Examination of Handhole Cover Liner	R. Kohli	BCD	MLR
3-60[c]	GEND-INF-080	09/87	TMI-2 RCS Manway Cover Backing Plates Surface Deposit Examinations	R. Kohli et al.	BCD	MLR
3-61[c]	TB 87-07 Rev. 1	10/87	Sampling and Estimating Sediment Volume in "B" Hot Leg and Attached Decay Heat Line	R. Kobayashi	GPUN	MLR

TMI-2 ACCIDENT EVALUATION PROGRAM SAMPLE ACQUISITION AND EXAMINATION REFERENCE DOCUMENTATION LIST--PRELIMINARY (December 1987)

Information[a] Category	Report Number	Publication Date	Title	Author: Name	Author: Company[b]	SABF[d] Custodian
4.1	Report	?	EPA Monitoring After the Three Mile Island Reactor Incident	Unidentified	EPA	
4.2	NUCON 6MT611/12	?	Iodine-131 Removal Efficiency Determination of Absorbent Samples	Unidentified	NCSI	
4.3	Letter		Summary of Radiological Assistance Team Actions Three Mile Island Incident	M. B. LeBoeuf		
4.4	TB 86-30 Rev 1	?	Reactor Building Basement Wall Gamma Measurement and Activity Estimate	TBD	GPUN	
4.5	No Number	00/79	Three Mile Island Nuclear Station Unit 1 and 2 Radioactive Effluent Release Report for January 1-June 30, 1979 (No Date)	Unidentified	TBD	
4.6	Memorandum	04/79	Preliminary Estimates of Radioactivity Releases from Three Mile Island	L. M. Barrett	NRC	
4.7	PGC-TR-171	04/79	Interim Report on the Three Mile Island Nuclear Station Offsite Emergency Radiological Environmental Monitoring Program	Unidentified	?	
4.8	EML-357	05/79	Radiation Measurements Following the Three Mile Island Reactor Accident	K. M. Miller	EML	
4.9	Letter	05/79	Monitoring Activities of the Department of Health, Education and Welfare in Support of the Three Mile Island Nuclear Incident for the Period March 28-April 15, 1979	J. C. Villforth	HEW	
4.10[c]	NUCON 6MT611/04	05/79	Analysis of the Absorbers and Absorbents from Three Mile Island Unit #2	Unidentified	NCSI	MLR
4.11	No Number Memo Report	05/79	Water Inventory as of 0800, 3/30/79	S. Lamana	NEC	
4.12[c]	NUREG-0558	05/79	Population Dose and Health Impact of the Accident at the Three Mile Island Nuclear Station	ADHOC Population Dose Assessment Group	NRC, EPA and HEW	(Langer)
4.13	No Number--GPU Micro #COR-0466.00	05/79	Isotope Inventory Balance	J. D. Phinney	B&W	
4.14	No Number--GPU Micro #PC-0001.02	05/79	Bleed Tanks and Pressurizer Sample Results	J. D. Phinney	B&W	
4.15	No Number--GPU Micro #PC-0001.02	05/79	Strontium and Gamma Isotopic Analyses	J. D. Phinney	B&W	
4.16	No Number--GPU Micro #COR-468	05/79	Reactor Coolant Sample and "A" Bleed Tank Sample Result	J. D. Phinney	B&W	
4.17	NUCON 6TM 611/03	05/79	Analysis of Iodine Inventory and Release from Adsorber 2652 of the Aux. Bldg. A Train of Unit 2	Unidentified	NCSI	MLR
4.18	Memorandum	06/79	Radioactive Gases Released from TMI on the Morning of March 30, 1979	C. O. Gallina to A. F. Gibson		
4.19	NUCON 6MT611/09	06/79	Analysis of the Absorbers and Absorbents from Three Mile Island Unit 2	Unidentified	NCSI	
4.20	WAPD-RC/E(TR)-160	06/79	Summary Report of Radiological Assistance Team Actions: Three Mile Island Accident	Unidentified	BAPL	
4.21	NSSR CONference	06/79	Report on Preliminary Radioactive Airborne Release and Charcoal Efficiency Data: TMI-2	J. T. Collins, et al.	?	

TMI-2 ACCIDENT EVALUATION PROGRAM SAMPLE ACQUISITION AND EXAMINATION REFERENCE DOCUMENTATION LIST--PRELIMINARY (December 1987)

Information Category[a]	Report Number	Publication Date	Title	Author Name	Author Company[b]	SA&E[d] Custodian
4-22	Unpublished	06/79	Plan for Decontamination of Auxiliary and Fuel Handling Buildings	J. F. Remark, et al.	?	
4-23	No Number	07/79	Harrisburg PA Milk Results	Unidentified	EPA-EMSL-LV	
4-24	No Number	07/79	Harrisburg PA Water Results	Unidentified	EPA-EMSL-LV	
4-25	GPU-TDR-TMI-103	07/79	Primary and Secondary Coolant Analysis	R. V. Furio P. A. Zanis	GPU	
4-26	NUREG/CR-0913	07/79	Generation of Hydrogen During the First Three Hours of the Three Mile Island Accident	R. K. Cole	SNL	
4-27	TDR-TMI-116	07/79	Assessment of Offsite Radiation Doses from the Three Mile Island Unit 2 Accident	Unidentified	PL&G	
4-28	No Number (draft report)	07/79	Estimate of External Whole-Body Radiation Exposure to Population Around TMI Nuclear Power Station	S. P. Hull	BNL	
4-29	NUREG-0591	08/79	Environmental Assessment, Use of EPICOR-II at Three Mile Island Unit 2	Unidentified	NRC	
4-30	ORNL/TM-7044	08/79	Involvement of ORNL Chemical Technology Division in Contaminated Air and Water Handling at TMI	R. E. Brookshank L. J. King	ORNL	
4-31	No Number	08/79	Effluent Releases from TMI Units 1 and 2 for First and Second Quarter	Not Identified	P-GC	
4-32	No Number	08/79	A report on Transport of Radioactivity from the TMI-2 Core to the Environs (for President's Commission on the Accident at Three Mile Island)	H. Lawroski	Consultant	MLR
4-33	B&R-GPU-R-026	10/79	Reactor Building Free Volume Calculation	A. S. Dam	B&R	
4-34[c]	No Number	10/79	Report of the Task Group on Health Physics and Dosimetry to President's Commission	J. A. Auxier, et al.		(Langer)
4-35	NUCON 6MT611/13	10/79	Summarized Postaccident TMI Unit 2 HVAC Absorber Systems Sample Data	Unidentified	NCSI	
4-36	No Number	11/79	TMI-2 Power History, Isotopic Analysis, LOR-2, Version 2		B&W	
4-37	GPU-TDR-059	02/80	Offsite Radiation Release	K. Woodard	GPUN	(Knauts)
4-38	ORNL-TM-7081	02/80	Postaccident Cleanup of Radioactivity at the Three Mile Island Nuclear Power Station	R. E. Brookshank W. J. Armento	ORNL	MLR
4-39	GPU-TDR-073	02/80	Deposition Activity at the 347' Elevation from Gamma Measurements in Penetration R-626	S. R. Blazo E. Walker	GPUN	
4-40	EPRI-NP-1389	04/80	131-I Studies at TMI-2	J. E. Cline, et al.	SAI	
4-41	R-80-012	05/80	NSAC EPRI Origen Code Calculation of TMI-2 Fission Product Inventory	R. G. Canada	TEC	
4-42	NUREG-0062 Volume 1 and 2	05/80	Final Environmental Assessment for Decontamination of the Three Mile Island Unit 2 Reactor Building Atmosphere--Final NRC Staff Report	Unidentified	NRC	
4-43	GPU-TDR-112	05/80	Postaccident Sampling and Analysis of the TMI-2 Reactor Building Atmosphere	J. Tate T. C. Menzel	GPUN	
4-44	CONF-800403 ANS/ENS Symposium	06/80	Fission Product Release from the Fuel Following the TMI-2 Accident	W. N. Bishop, et al.	TBD	
4-45	TIO-11277	07/80	Compilation of Chemistry Results for TMI-2 Reactor Coolant System			

TMI-2 ACCIDENT EVALUATION PROGRAM SAMPLE ACQUISITION AND EXAMINATION REFERENCE DOCUMENTATION LIST--PRELIMINARY (December 1987)

Information[a] Category	Report Number	Publication Date	Title	Author: Name	Author: Company[b]	SAAE[d] Custodian
4-46	GPU-TDR-182	09/80	Reactor Building Purge--Analysis of the Measurement of Vented Activity	P. J. Babel T. C. Menzel	GPUN	
4-47	No Number	09/80	Environmental Radioactivity at the TMI Venting Phase	Unidentified	EPA	
4-48	GPU-TDR-162	09/80	Postaccident Sampling and Hazardous Gas Analysis of TMI-2 Reactor Building Atmosphere for Support of Reactor Building Entry	J. W. Langenbach	TBD	
4-49	SAI-139-80-573-LJ	10/80	Meas. of 129-I and Radioactive Particulate Concentrations in TMI-2 Containment Atmosphere During and After the Venting	J. E. Cline, et al.	SAI	
4-50	GPU-TDR-071	10/80	Postaccident Plateout Measurements of the Hydrogen Recombiner Spool Piece	J. Tate T. C. Menzel	GPUN	
4-51	TID 1225	10/80	Auxiliary Building Sump Sample Analytical Results	L. C. Rogers	B&W	
4-52	No Number	11/80	Metropolitan Edison's Environmental Monitoring Activities Conducted During the Krypton-85 Venting at Three Mile Island Unit 2	W. E. Reithle	GPUN	
4-53	Trans of ANS Volume 35	11/80	The EPA's Radiation Monitoring and Surveillance Activities During the Purging of TMI-2	E. W. Bretthauer, et al.	US-EPA	
4-54	No Number (ANS Trans Volume 35)	11/80	Monitoring Krypton-85 During TMI-2 Purging Using the Penn State Noble Gas Monitor	W. A. Jester A. J. Baratta	PSU-NED	
4-55	ANS Trans Volume 35	11/80	A Citizen's Radiation Monitoring Program for the TMI Area	A. J. Baratta, et al.		
4-56	ANS Trans Volume 35	11/80	The Management of KR-85 by a Community Monitoring Program	M. A. Reilley		
4-57[c]	LMF-70	01/81	Characterization of an Aerosol Sample from TMI Reactor Auxiliary Building	J. B. Knauer G. M. Kanapilly	ORNL LB&ERI	(Akers)
4-58[c]	RE-P-81-015	01/81	Preliminary Investigation of Feasibility of Gamma Spectra/Neutron Counting Techniques to Locate and Characterize TMI-2 RCS Fuel Debris	C. V. McIsaac	EG&G	(Akers)
4-59	CONF-801038	02/81	Studies of Airborne Iodine at TMI-2	J. E. Cline, et al.	SAI	
4-60	CONF-8010138	02/81	Investigations into the Air Cleaning Aspects of the TMI Accident	R. R. Bellamy	TBD	
4-61	FDA 81-8142	02/81	Use of Photographic Film to Estimate Exposure Near the Three Mile Island Nuclear Power Station	R. E. Shuping		MLR Abstract
4-62[c]	GEND-013	03/81	TMI-2 Reactor Building Purge--KR-85 Venting	L. J. Kripps	TBD	
4-63[c]	GEND-009	04/81	Measurements of 129-I and Radioactive Particulate Concentrations in the TMI-2 Containment Atmosphere During and After Venting	J. E. Cline, et al.	SAI	MLR
4-64[c]	GEND-005 EGG-PHYS-5337	05/81	Characterization of the Three Mile Island Unit-2 Reactor Building Atmosphere Prior to the Reactor Building Purge	J. K. Hartwell, et al.	EG&G	MLR
4-65	SAD 527-A Rev. 2	05/81	Division III System Design Description for Submerged Demineralizer System for TMI Unit II Recovery		GPUN	
4-66[c]	GEND-INF-001	06/81	Quick Look Report Entry 1 TMI-2 July 23, 1980	Not Identified	BNI	MLR
4-67[c]	GEND-INF-011	07/81	First Results of TMI-2 Sump Samples Analyses--Entry 10	D. H. Meikrantz	EG&G	MLR
4-68	GPU TDR-055	07/81	Pathways for Transport of Radioactive Material Following the TMI-2 Accident	L. Flaherty J. Paridiso	EI GPUN	MLR

TMI-2 ACCIDENT EVALUATION PROGRAM SAMPLE ACQUISITION AND EXAMINATION REFERENCE DOCUMENTATION LIST--PRELIMINARY (December 1987)

Information[a] Category	Report Number	Publication Date	Title	Author Name	Author Company[b]	SA&E[d] Custodian
4-69	GEND-INF-008	07/81	Quick Look Report on HP-RT-211 Multivalued Behavior	J. W. Mock, et al. and SNL	EG&G, UE&C	MLR
4-70	SAI-139-081-07-RV	08/81	Gamma Scan of TMI-2 Reactor Coolant Bleed Tanks	J. E. Cline, et al.	SAI	
4-71[c]	GEND-INF-005	08/81	Quick Look Report Entry 5, TMI-2 December 11, 1980	Not Identified GPUN	BNI	MLR
4-72[c]	GEND-INF-006	08/81	Quick Look Report Entry 6, TMI-2 February 3 and 5, 1981	Not Identified GPUN	BNI	MLR
4-73[c]	GEND-INF-007	08/81	Quick Look Report Entry 7, TMI-2 March 17, 19 and 20, 1981	Not Identified	BNI GPUN	MLR
4-74	No Number	09/81	Analysis of TMI-2 Paint Chip Samples	Unidentified	SAI	
4-75	TIO-6565	09/81	Curie Estimate Basement Sample	C. V. McIsaac	EG&G	
4-76[c]	SAI-139-81-02-RV	09/81	Radionuclide Mass Balance of TMI-2 Accident	J. A. Daniel	SAI	(Akers)
4-77	SAI-139-81-01	09/81	Measurement of Surface Contamination Levels on Designated Floor Areas on Elevation 305', TMI-2 Reactor Building	E. D. Barefoot, et al.	SAI	MLR
4-78[c]	GEND-006	10/81	Color Photographs of the Three Mile Island Unit 2 Reactor	G. R. Eidam J. T. Horan	GPUN	MLR
4-79	GEND-14	10/81	Examination Results of TMI Radiation Detector HP-R-211			
4-80	SAI-139-81-06-RV	11/81	Measurement of Contamination on Containment Coolers C, D and E and Surface Contamination on a Designated Floor Area on Elevation 305 ft, TMI Reactor Building	D. S. Cameron, et al.	SAI	
4-81	NSAC-30	11/81	Iodine-131 Behavior During the TMI-2 Accident	C. A. Pelletier	SAI	
4-82	GEND-INF-017 Volume I	11/81	Field Measurements and Interpretations of TMI-2 Instrumentation: CF-1-PT3	J. E. Jones, et al.	TEC	
4-83	GEND-INF-017 Volume II	11/81	Field Measurements and Interpretations of TMI-2 Instrumentation: CF-1-PT4	J. E. Jones, et al.	TEC	
4-84	RE-P-82-007	01/82	TMI-2 Monthly Report for January, 1982	C. V. McIsaac O. D. Simpson	EG&G	
4-85	GEND-INF-017-3	01/82	Field Measurements and Interpretation of TMI-2 Instrumentation HP-R-211 (Radiation Monitor)	Jones, et al.	TEC	(Knauts)
4-86[c]	GEND-INF-019	01/82	Estimated Source Terms for Radionuclides and Suspended Particulates During TMI-2 Defueling Operations			
4-87	GEND-INF-017-6	01/82	Field Measurements and Interpretation of TMI-2 Instrumentation: IC-10-DPT (CRDMs bypass flow)	Jones, et al.	TEC	(Knauts)
4-88	GEND-INF-017-8	01/82	Field Measurements and Interpretation of TMI-2 Instrumentation: HP-R-212 (Radiation Monitor)	Jones, et al.	TEC	(Knauts)
4-89	GEND-INF-017-9	01/82	Field Measurements and Interpretation of TMI-2 Instrumentation: HP-R-213 (Radiation Monitor)	Jones, et al.	TEC	(Knauts)
4-90	LRC-5266 TIO-10773	02/82	Analysis of TMI-2 Makeup Filter MU-F-513 Debris	V. B. Subrahmanyam	B&W	
4-91[c]	GEND-INF-009	02/82	Pre-Decontamination Gamma-Ray Surface Scans in TMI-2 Containment Building 305' Elevation	E. D. Barefoot, et al.	SAI	MLR
4-92	7132-82-167	03/82	Investigation of TMI Hydrogen Phenomena of March 28, 1979	TBD	GPUN	
4-93	SAI-139-82-05-RV	04/82	Pre- and Postdecontamination Gamma-Ray Scans of TMI-2 Containment Surfaces, Elevations 305 and 347 Feet	E. D. Barefoot, et al.	SAI	
4-94	GEND-INF-017 Volume 10	04/82	Field Measurements and Interpretation of TMI-2 Instrumentation: HP-R-214	J. E. Jones, et al.	TBD	

TMI-2 ACCIDENT EVALUATION PROGRAM SAMPLE ACQUISITION AND EXAMINATION REFERENCE DOCUMENTATION LIST--PRELIMINARY (December 1987)

Information[a] Category	Report Number	Publication Date	Title	Author Name	Author Company[b]	SAAE[d] Custodian
4-95[c]	GEND-INF-021	05/82	Analysis Data on Samples from the TMI-2 Reactor Coolant System and Reactor Coolant Bleed Tank	R. L. Nitschke	EG&G	
4-96	ED-E3-82-017	06/82	Current Status and Accident Presentation of Containment Air RTD's	Mock	EG&G	(Knauts)
4-97	GEND-INF-023 Volume I	06/82	Investigation of Hydrogen Burn Damage in the Unit 2 Reactor Building	R. J. Alvarez, et al.		
4-98	RE-P-82-067	07/82	TMI-2 Monthly Report for July, 1982	C. V. McIsaac D. D. Simpson	EG&G	
4-99[c]	GEND-INF-023 Volume II	08/82	Estimated Temperatures in the TMI-2 Containment Building During the 1979 Accident	H. W. Schutz P. K. Nagata	EG&G	
4-100[c]	GEND-015	08/82	Characterization of EPICOR-II Prefilter Liner 16	J. D. Yesso, et al.	BCL	MLR
4-101	SAI-139-82-12-RV	09/82	Preliminary Radioiodine Source Term and Inventory Assessment for TMI-2	C. A. Pelletier, et al.	SAI	
4-102	GEND-INF-011, Volume II	10/82	Reactor Building Basement Radionuclide Distribution Studies	T. E. Cox, et al.	EG&G	
4-103	SAI-139-82-14 RV	10/82	Characterization of Contaminants in TMI-2 Systems--Interim Report	J. A. Daniel, et al.	SAI	MLR
4-104[c]	RE-P-82-095	10/82	Calibration of Two Surface Samplers for Collecting (12/81 and 3/82) Samples from TMI-2 RB Concrete and Steel Surfaces	C. V. McIsaac	EG&G	(Akers)
4-105[c]	RE-P-82-111	11/82	Estimated Exposure Rates and Inventories for TMI Makeup and Purification System Demineralizers A and B	D. E. Wessol, et al.	EG&G	(Akers)
4-106	GEND-INF-029 Volume I	11/82	TMI-2 Pressure Transmitter Examination Program Year End Report: Examination and Evaluation of Pressure Transmitters CF-1-PT3 and CF-2-LT3	F. T. Soberano		
4-107	ANS Meeting	11/82	Characterization of Fission Product Deposition in the TMI-2 Reactor Coolant and Auxiliary Systems	J. A. Daniel J. C. Cunnane	TBD	
4-108	ANS Winter Meeting	11/82	Processing of the TMI-2 Reactor Building Sump and the Reactor Coolant System	K. J. Hofstetter C. G. Hitz	GPUN	
4-109	ANS Winter Meeting	11/82	Fission Product Transfer in the TMI-2 Purification System	T. E. Cox	EG&G	
4-110	GEND-19	11/82	Examination Results of TMI Radiation Detector HP-R-213			
4-111	TPO/TMI-027	11/82	Data Report on Reactor Building Basement--History and Present Conditions	TBD	GPUN	
4-112	RE-P-82-124	12/82	Gamma Scans of TMI-2 Makeup and Purification Filters and Associated Vacuum Filters	R. L. Nitschke	EG&G	(Akers)
4-113	HEDL-7205 HEDL-SA-2834	12/82	Fuel Content of TMI-2 Unit 2 Makeup Demineralizers	J. P. Meece, et al. TIO-16217	HEDL	
4-114	TIO-15810	12/82	Analysis of TMI-2 Reactor Coolant Bleed Tank "A" Sludge Sample	J. J. McCown	W	
4-115	GPU-TDR-031	12/82	Reactor Building Radiation Characterization	R. Gardner	GPUN	(Knauts)
4-116	LA-9622-MS	01/83	TMI-2 Fission-Product Element and Isotopic Inventories	T. R. England W. B. Wilson	TBD	
4-117	TPO/TMI-034	01/83	Technical Plan for Sludge Removal from Elevation 282'6"			
4-118	TPO/TMI-035	01/83	Technical Plan for TMI-2 Core Accountability	TBD	GPUN	

TMI-2 ACCIDENT EVALUATION PROGRAM SAMPLE ACQUISITION AND EXAMINATION REFERENCE DOCUMENTATION LIST--PRELIMINARY (December 1987)

Information[a] Category	Report Number	Publication Date	Title	Author: Name	Author: Company[b]	SA&E[d] Custodian
4-119[c]	GEND-INF-019 Volume II	02/83	Estimated Source Terms for Radionuclides and Suspended Particulates During TMI-2 Defueling Operations	P. G. Voilleque, et al.	SAI	MLR
4-120[c]	EGG-TMI-6181	02/83	Interim Report on the TMI-2 Purification Filter Examination	R. E. Mason, et al.	EG&G, LANL & ANL	MLR
4-121[c]	GEND-031	02/83	Submerged Demineralizer System Processing of TMI-2 Accident Waste Water	H. F. Sanchez, et al.	TBD	
4-122	NUS-TM-47	03/83	Pipe Volume Identification for Systems Utilized in Radioactive Material Transfer During the TMI-2 Accident	D. W. Tonkay	NUS	
4-123	NUS-TM-48	03/83	Shapes and Volumes of Components in the TMI-2 Makeup and Purification System and the Reactor Building Basement	R. J. Davis	NUS	
4-124[c]	GEND-028	03/83	Preliminary Radioactive Source Term and Inventory Assessment for TMI-2	C. A. Pelletier, et al.	TBD	
4-125[c]	TPO/TMI-043 Rev. 0	03/83	Radioactive Waste Management Summary Review	G. Worku	GPUN	MLR
4-126	83-095 (Letter)	03/83	TMI-2 Curie Inventory	J. A. Daniel	SAI	
4-127	EPRI-2922	03/83	Characterization of Containments in TMI-2 System--Interim Report		EPRI	
4-128	GEND-INF-023 Volume IV also RHO/RE/SA/8 Rev. 2	03/83 10/82	Analysis of the Three Mile Island (TMI-2) Hydrogen Burn	J. O. Henrie A. K. Postma	RI	
4-129[c]	GEND-027	04/83	Characterization of EPICOR-II Prefilter Liner 3	N. L. Wynhoff V. Pasupathi	BCL	MLR
4-130	TPO/TMI-027	04/83	Reactor Building Basement--History and Present Conditions	G. Worten, et al.	GPUN & BNI	
4-131[c]	GEND INF-032 Volumes 1 and 2	04/83	Radionuclide Mass Balance for the TMI-2 Accident: Data Base System and Preliminary Mass Balance	M. I. Goldman, et al.	NUS	MLR
4-132	Manuscript Submittal to Nuclear Technology	04/83	Engineering Analysis of Letdown Data Taken During Primary Coolant Cleanup at Three Mile Island	K. J. Hofstetter, et al.	GPUN & ORNL	
4-133[c]	NUS-4350-Draft	04/83	TMI-2 Technology Transfer: Task 2--Demonstration Utilization of Source Term Data	R. R. Sherry, et al.	NUS	MLR
4-134	NUS-TM-49	04/83	EPICOR II and SDS Influent Sources and Concentrations	T. Lookabill	NUS	
4-135	GEND-INF-030	04/83	Analysis of Air Temp Measurements from TMI-2 Reactor Building	Fryer	EG&G	(Knauts)
4-136	SD-WM-TI-067	05/83	Analysis of TMI-2 Transients	J. O. Henrie A. K. Postma	RI	
4-137[c]	GEND-INF-011 Volume III	06/83	Reactor Building Basement Radionuclide Distribution Studies	T. E. Cox, et al.	EG&G	MLR
4-138[c]	NUS-TM-52	06/83	Information on Reactor Building Surface Contamination	R. J. Davis	NUS	MLR
4-139	Third Symposium on Separation Science and Technology for Energy Application	06/83	The Use of the Submerged Demineralizer System at Three Mile Island	K. J. Hofstetter C. G. Hitz	GPUN	
4-140[c]	GEND-INF-039	06/83	Final Analysis on TMI-2 Reactor Coolant System and Reactor Coolant Bleed Tank Samples	T. E. Cox, et al.	EG&G	MLR
4-141[c]	Hmb-207-83 Letter	06/83	Purification Demineralizer Resin Samples	A. P. Malinauskas	ORNL	MLR
4-142	LA-9795-MS	08/83	NDA Measurement of Demineralizers at TMI-2	J. R. Phillips	LANL	
4-143[c]	NUS-4432 Volume 2	09/83	Radionuclide Mass Balance for the TMI-2 Accident: Data through 1979 and Preliminary Assessment of Uncertainties--Appendix C TMI-2 Mass Balance: Data Base	R. J. Davis, et al.	NUS	MLR

TMI-2 ACCIDENT EVALUATION PROGRAM SAMPLE ACQUISITION AND EXAMINATION REFERENCE DOCUMENTATION LIST--PRELIMINARY (December 1987)

Information Category[a]	Report Number	Publication Date	Title	Author Name	Author Company[b]	SAAE[d] Custodian
4-144[c]	NUS-TM-51	09/83	Information on Radioactivity in Solids for Inclusion in the TMI-2 Mass Balance Data Base	R. J. Davis	NUS	MLR
4-145[c]	NUS-TM54	09/83	TMI-2 Mass Balance Chronology Extension Calculations	D. W. Tonkay E. A. Vissing	NUS	MLR
4-146[c]	GEND-033	09/83	The Use of Multi-Element Beta Dosimeters for Measuring Dose Rates in the TMI-2 Containment Building	R. I. Scheppelz	PNL	MLR
4-147[c]	NUS-TM-50	09/83	Information on Gaseous Radioactivity for Inclusion in the TMI-2 Mass Balance Data Base	R. J. Davis	NUS	MLR
4-148[c]	GEND-INF-023 Volume III	09/83	Data Integrity Review of Three Mile Island Unit 2 Hydrogen Burn Data	J. K. Jacoby, et al.	EG&G	MLR
4-149	HEDL-TC-2492	10/83	Solid State Track Recorder Neutron Dosimetry Measurements for Fuel Debris Location in the Three Mile Island Unit-2 Makeup and Purification Demineralizer	F. H. Ruddy, et al.	HEDL	
4-150[c]	GEND-037	10/83	Surface Activity and Radiation Field Measurements of the TMI-2 Reactor Building Gross Decontamination Experiment	C. V. McIsaac	EG&G	
4-151	HEDL-7205	10/83	Fuel Assessment of Three Mile Island Unit-2 Makeup Demineralizers by Compton Recoil Continuous Gamma Ray Spectroscopy	McNeece, et al.	HEDL	
4-152	GPU-TDR-082	12/83	Airborne Recontamination Studies	Tarpenian Furio	GPUN	(Knouts)
4-153[c]	EGG-TIO-MOO784	00/84	TMI-2 Plant Demineralizer Sample Analysis	J. D. Thompson	EG&G	MLR
4-154	Trans. Am. Nucl. Society 47	00/84	Long-term Appearance Rate of Radionuclides in TMI-2 Coolant	V. F. Baston K. J. Hofstetter	PSI GPUN	
4-155[c]	GEND-061	05/87	Lessons Learned from Hydrogen Generation and Burning During the TMI-2 Event	J. D. Henrie A. K. Postma	RI-RHD	MLR
4-156	TPO/TMI-107	02/84	Evaluation of Concrete Borings from Reactor Building	Unidentified	GPUN & BNI	
4-157	GEND-INF-049	03/84	Examination Results of TMI Radiation Detector HP-R-212	G. M. Mueller		
4-158	TPO/TMI-110	03/84	Data Report on Underhead Data Acquisition Program		GPUN	
4-159	GEND-INF-029 Volume II	04/84	TMI-2 Pressure Transmitter Examination and Evaluation of CF-1-PT2, CF-2-LT1 and CF-2-LT2	M. E. Yancey R. C. Strahm	EG&G	
4-160	GEND-INF-013	05/84	TMI-2 Purification Demineralizer Resin Study	J. D. Thompson T. R. Oosterhoudt	TBD	
4-161[c]	GEND-INF-054	06/84	Results of Analyses Performed on Concrete Cores Removed from Floors and O-Ring Walls of the TMI-2 Reactor Building	C. V. McIsaac, et al.	EG&G	
4-162	ANS Symposium	07/84	TMI-2 Radiocesium Behavior	R. A. Lorenz, et al.	ORNL	
4-163	EGG-TMI-6580	09/84	TMI Particle Characterization Determined from Filter Examinations--Draft	C. S. Olsen, et al.	EG&G, LANL & ANL-E	MLR
4-164	EPRI-NP-3694	09/84	Characterization of Contaminants in TMI-2 Systems	J. A. Daniel, et al.	SAI	MLR
4-165	CONF-840914-22	09/84	Tellurium Behavior During and After the TMI-2 Accident	K. Vinjamuri, et al.	EG&G	MLR
4-166[c]	EGG-TMI-6580	09/84	TMI Particle Characterization Determined from Filter Examinations	C. S. Olsen, et al.	EG&G, LANL, ANL-E	MLR
4-167[c]	EGG-TMI-6701	09/84	Tellurium Release and Deposition During the TMI-2 Accident	K. Vinjamuri, et al.	EG&G	MLR
4-168[c]	GEND-042	10/84	TMI-2 Reactor Building Source Term Measurements: Surfaces and Basement Water and Sediment	C. V. McIsaac D. G. Keefer	EG&G	MLR

TMI-2 ACCIDENT EVALUATION PROGRAM SAMPLE ACQUISITION AND EXAMINATION REFERENCE DOCUMENTATION LIST--PRELIMINARY (December 1987)

Information[a] Category	Report Number	Publication Date	Title	Author: Name	Author: Company[b]	SA&E[d] Custodian
4-169	GEND-INF-034	11/84	Testing and Examination of TMI-2 Electrical Components and Discrete Devices	E. T. Soberano	TBD	
4-170[c]	GEND-INF-047 NUS-4432, Volume 1	11/84	Radionuclide Mass Balance for the TMI-2 Accident: Data through 1979 and Preliminary Assessment of Uncertainties	R. J. Davis, et al.	NUS	MLR MLR
4-171[c]	EGG-10282-1009	12/84	Airborne Cloud Tracking Measurements During the Three Mile Island Nuclear Station Accident	R. H. Beers, et al.	EG&G-EM	MLR
4-172[c]	No Number	12/84	Characterization of TMI-2 Auxiliary Building Sump and Sump Tank Radwaste	J. A. Wilson, et al.	B&W	MLR
4-173	GEND-INF-023, Vol. VI ACS Symp. Series 293	00/85	Assessment of Extent of Thermal Damage to Polymeric Materials by Hydrogen Deflagration in TMI-2 RB	N. J. Alvarez	LLNL	
4-174[c]	TPO/TMI-125 (Volumes 1 and 2)	01/85	Data Report on Reactor Building Radiological Core Characterization	?	GPUN	
4-175[c]	TPB-85-10	04/85	Estimates of TMI-2 Letdown Demineralizer Resin Retained and Eluted Fission Products and Fuel	T. E. Cox	GPUN	MLR
4-176	EPRI-NP-3975[d]	04/85	Analysis of the Hydrogen Burn in the TMI-2 Containment	R. G. Zalosh	FMRC	MLR[d]
4-177	Nuclear Technology Volume 69	04/85	Circulation within the Primary System at TMI-2 with Lowered Coolant Level and Atmospheric Conditions	V. F. Baston, et al.	PSI	
4-178	TPO/TMI-050	05/85	Planning Study on System Options and Requirements for Locating Fuel in TMI-2		GPU-TPD	
4-179	CONF-850417-18[d] ACS Symposium	05/85	Cleanup of TMI-2 Demineralizer Resins	W.D. Bond, et al.	GPUN	MLR
4-180[c]	ACS Symposium Series 293	05/85	TMI-2 Reactor Building Source Term Measurements	C. V. McIsaac D. G. Keefer	EG&G EG&G	MLR
4-181[c]	ACS Symposium Series 293	05/85	Fission Product Behavior	P. G. Voilleque	SAI	
4-182	TB-85-08 Rev. 1	05/85	Reactor Building Basement Fuel Estimate	TBD	GPUN	
4-183	TB 85-08 Rev. 1	05/85	Reactor Building Basement Fuel Estimate	TBD	GPUN	
4-184	EPA-600/4-85-042	06/85	Monitoring the Venting of Three Mile Island: Report of an Evaluation Workshop	Not Identified	USEPA-EMSL	LIB
4-185	Nuclear Technology Volume 69	06/85	Circulation within the Primary System at TMI-2 with Lowered Coolant Level and Atmospheric Conditions	V. F. Baston et al.	PSI	
4-186[c]	TPO/TMI-043 Rev. 4	08/85	Radioactive Waste Management Summary Review	I. Igarashi	GPUN	MLR
4-187[c]	GEND-INF-063	08/85	Analysis of the TMI-2 Dome Radiation Monitor	M. B. Murphy, et al.	SNL	MLR
4-188	EGG-PBS-6798	08/85	TMI-2 Isotopic Inventory Calculation	B. G. Schnitzler J. B. Briggs	EG&G	
4-189	EGG-PBS-6798	08/85	TMI-2 Isotopic Inventory Calculation	B. G. Schnitzler	EG&G	
4-190[c]	TPO/TMI-176	09/85	Cesium Elution of Makeup and Purification Demineralizer Resins	K. J. Hofstetter	GPUN	MLR
4-191[c]	ENERGEX R85-009	09/85	Review of Severe Accident Issues Which Relate to Fission Product Behavior at TMI-2	H. A. Mitchell, et al.	EAI	MLR
4-192[c]	TB 85-35	10/85	Robotic Sediment Sampling	R. Brosey	GPUN	MLR
4-193[c]	TB 85-33	11/85	Makeup Pump Room Reactor Fuel Quantification	P. Babel	GPUN	MLR

TMI-2 ACCIDENT EVALUATION PROGRAM SAMPLE ACQUISITION AND EXAMINATION REFERENCE DOCUMENTATION LIST--PRELIMINARY (December 1987)

Information[a] Category	Report Number	Publication Date	Title	Author Name	Author Company[b]	SA&E[d] Custodian
4-194[c]	TB 85-34	11/85	Urgent O-Ring Decontamination Problems and Technique Alternatives	H. P. Wood	GPUN	PLR
4-195[c]	TB 85-041	12/85	Preliminary Radiological Surveys of Concrete Cores Removed from Reactor Building Basement Walls	H. P. Wood	GPUN	PLR
4-196	GEND-INF-029 Volume III	12/85	Examination and Evaluation of TMI-2 Transmitters CF-1-PT4 and CF-2-LT4	M. E. Yancey R. C. Strahm	EG&G	
4-197[c]	ORNL/TM-9666 Draft	00 86	The Behavior of Fission Product Cesium in the TMI-2 Accident	R. A. Lorenz, et al.	ORNL	PLR
4-198	ACS Symposium Series 293	00/86	Water Chemistry: The Three Mile Island Accident Diagnosis and Prognosis	K. J. Hofstetter V. F. Baston	GPUN PSI	
4-199	ACS Symposium Series	00/86	Water Chemistry: The Three Mile Island Accident	K. J. Hofstetter	GPUN	
4-200	GEND-INF-069	00/86	Analysis of the Polar Crane Pendant Cable from TMI-2	R. E. Trujillo et al.	SNL HEDL	
4-201[c]	TB-85-35 Rev. 1	01/86	Robotic Sediment Sampling	T. E. Cox	BNI	PLR
4-202[c]	TB-86-08	02/86	Makeup Tank Room (AX116) Fuel Quantification	P. Babel	GPUN	PLR
4-203[c]	TB-86-10	02/86	"B" Steam Generator TLD Characterization	B. H. Brosey M. W. Lambert	GPUN	PLR
4-204[c]	TB-85-11	02/86	Autoradiography of Concrete Cores	C. M. Davis	GPUN	PLR
4-205[c]	TB-86-5	02/86	Reactor Building Concrete Core Samples	T. E. Cox	BNI	PLR
4-206[c]	TB-86-06	02/86	Makeup Suction Valve Room (FH-001) Fuel Quantification	P. J. Babel	GPUN	PLR
4-207[c]	TB-86-07	02/86	Makeup Discharge Valve Rooms (FH-003A and FH-003B) Fuel Quantification	P. J. Babel	GPUN	PLR
4-208	TB-86-21	03/86	Makeup Valve Room (FH-101) Fuel Quantification	P. J. Babel	GPUN	PLR
4-209[c]	TB-86-20	03/86	Radiation Mapping System	R. D. Shauss	GPUN	PLR
4-210[c]	TB-86-5 Rev. 1	04/86	Reactor Building Concrete Core Samples	P. J. Babel	GPUN	PLR
4-211c	TB-86-18	04/86	RB Basement Thermoluminescent Dosimeter (TLD) Comparison Study	B. Brosey	GPUN	PLR
4-212[c]	TB-86-26	05/86	Letdown Cooler Room Fuel Quantification	P. J. Babel	GPUN	PLR
4-213[c]	TB-86-27	05/86	Preliminary Leaching Data for Concrete Bores	P. J. Babel	GPUN	PLR
4-214[c]	TB-86-30	06/86	Reactor Building Basement Wall & Floor Gamma Measurements	B. Brosey	GPUN	PLR
4-215[c]	TB-86-05 Rev. 2	06/86	Reactor Building Concrete Core Samples	B. H. Brosey	GPUN	PLR
4-216[c]	TB-86-31 Rev. 0	06/86	Volume of Sediment Inside Secondary Shield	W. P. Wood	GPUN	PLR
4-217[c]	TPO/TMI 043 Rev. 5	06/86	Radioactive Waste Management--Summary Review	H. Igarashi	GPUN	PLR
4-218[c]	TB 86-31 Rev. 0	06/86	Volume of Sediment Inside Secondary Shield	H. P. Wood	GPUN	PLR
4-219[c]	No Number	08/86	Radioanalytical Report (RB Basement Sludge)	Not Identified	SAI	PLR
4-220	ACS Symposium, ACS-293	08/86	TMI-2 Reactor Coolant System Radionuclide Accumulation Rates	V. F. Baston K. J. Hofstetter	PSI GPUN	
4-221[c]	No number	08/86	Radioanalytical Report (RB Bsmt Sludge)	Not Identified	SAI	PLR
4-222	ACS Symposium ACS-293	08/86	TMI-2 Reactor Coolant System Radionuclide Accumulation Rates	V. F. Baston K. J. Hofstetter	PSI GPUN	
4-223[c]	TB 86-36 Rev. 0	08/86	Characterization of Sediment on Reactor Building Basement Floor	TBD	GPUN	
4-224[c]	EG&G-2407 GEND-057	09/86 11/86	Fission Product Inventory Program FY-85 Status Report	S. Langer, et al.	EG&G	PLR

TMI-2 ACCIDENT EVALUATION PROGRAM SAMPLE ACQUISITION AND EXAMINATION REFERENCE DOCUMENTATION LIST--PRELIMINARY (December 1987)

Information Category[a]	Report Number	Publication Date	Title	Author: Name	Author: Company[b]	SA&E[d] Custodian
4-225[c]	None	09/86	Radiation and Health Effects--A Report on the TMI-2 Accident and Related Health Studies	V. H. Behling J. E. Hildebrand	GPUN	RKM
4-226	TB-86-38 Rev. 0	09/86	Summary of Fuel Quantities External to the Reactor Vessel			
4-227[c]	None	09/86	Radiation and Health Effects - A Report on the TMI-2 Accident and Related Health Studies	V. H. Behling	GPUN	MLR
4-228	TB 86-38 Rev. 0	09/86	Summary of Fuel Quantities External To the Reactor Vessel	J. E. Hildebrand		
4-229[c]	EGG-TMI-7376	09/86	TMI-2 Radiation Monitor Data Report	R. D. McCormick	EG&G	MLR
4-230[c]	TB-86-30 Rev. 3	10/86	Reactor Building Basement Wall Gamma Measurements	B. H. Brosey	GPUN	MLR
4-231[c]	TB-86-41	10/86	Cerium 144 as a Tracer for Fuel Debris	J. Greenborg	GPUN	MLR
4-232	ACS Symposium	10/86	Fission Product Behavior in the TMI-2 Core: Preliminary Evaluation of Transport and Chemistry	D. W. Akers, et al.	EG&G	MLR
4-233[c]	TB 86-30 Rev. 3	10/86	Reactor Building Basement Wall Gamma Measurements	B. H. Brosey	GPUN	MLR
4-234[c]	TB 86-41	10/86	Cerium 144 as a Tracer for Fuel Debris	J. Greenborg	GPUN	MLR
4-235	ACS Symposium	10/86	Fission Product Behavior in the TMI-2 Core: Preliminary Evaluation of Transport and Chemistry	D. W. Akers et al.	EG&G	MLR
4-236[c]	TB-86-30 Rev. 4	11/86	Reactor Building Basement Wall Gamma Measurement	B. H. Brosey	GPUN	MLR
4-237[c]	TB-86-5 Rev. 3	11/86	Reactor Building Concrete Core Samples	R. E. Lancaster	GPUN	MLR
4-238[c]	TB 86-30 Rev. 4	11/86	Reactor Building Basement Wall Gamma Measurement	B. H. Brosey	GPUN	MLR
4-239[c]	GEND-056	11/86	TMI-2 Instrumentation and Electrical Program Final Evaluation Report	C. W. Mayo	EG&G	MLR
4-240[c]	TB-86-5 Rev. 4	12/86	Reactor Building Concrete Core Samples	R. E. Lancaster	GPUN	MLR
4-241[c]	TB-86-48	12/86	Cleanup Filters (WDL-F6A and B and WDL-F9A and B) Fuel Quantification	P. J. Babel	GPUN	MLR
4-242[c]	TB-86-47	12/86	Decay Heat Vaults (AX-501 and AX-502) and RB Spray Vaults (AX-503 and AX-504) Fuel Quantification	P. J. Babel	GPUN	MLR
4-243[c]	TB-86-46	12/86	Assessment of RB Basement Postdecontamination Exposure Rates	B. H. Brosey	GPUN	MLR
4-244[c]	TB-86-27 Rev 2	12/86	One Hundred Twenty-Five Day Leaching Data for Basement Concrete Cores	C. H. Distenfeld	GPUN	MLR
4-245[c]	TB 86-5 Rev. 4	12/86	Reactor Building Concrete Core Samples	R. E. Lancaster	GPUN	MLR
4-246[c]	TB 86-48	12/86	Cleanup Filters (WDL-F6A & WD1____Fuel Quantification	P. J. Babel	GPUN	MLR
4-247[c]	TB 86-47	12/86	Decay Heat Vaults (AX501 and AX502) and RB Spray Vaults	P. J. Babel	GPUN	MLR
4-248[c]	TB 86-46	12/86	Assessment of RB Basement Post-Decontamination Exposure Rates	B. H. Brosey	GPUN	MLR
4-249[c]	TB 86-27 Rev. 2	12/86	One Hundred Twenty Five Day Leaching Data for Basement Concrete Cores	C. H. Distenfeld	GPUN	MLR
4-250[c]	TB 85-36 Rev. 1	02/87	Characterization of Sediment on Reactor Building Basement Floor	H. P. Wood	GPUN	MLR
4-251[c]	EGG-TMI 7533 GEND-INF-081	02 87 02 87	Examination of Concrete Samples from the TMI-2 Reactor Building Basement	D. W. Akers G. S. Roybal	EG&G	MLR
4-252[c]	TB 87-05 Rev. 0	03 87	Reactor Building Liner Wall Radiation Measurements and Activity Estimate	B. H. Brosey	GPUN	MLR

TMI-2 ACCIDENT EVALUATION PROGRAM SAMPLE ACQUISITION AND EXAMINATION REFERENCE DOCUMENTATION LIST--PRELIMINARY (December 1987)

Information Category[a]	Report Number	Publication Date	Title	Author: Name	Author: Company[b]	SA&E[d] Custodian
4-253[c]	TB 86-30 Rev. 5	03/87	Reactor Building Basement Wall Gamma Measurements	B. H. Brosey	GPUN	MLR
4-254[c]	Nucl. Technology Vol. 76	03/87	A Comparison of Measured Radionuclide Release Rates from TMI-2 Core Debris for Different Oxygen Chemical Potentials	V. F. Baston et al.	PSI	MLR
4-255[c]	TB 86-46 Rev. 1	05/87	Assessment of RB Basement Post-decontamination Exposure Rates	B. H. Brosey	GPUN	MLR
4-256[c]	TB 87-12 Rev. 0	05/87	Characterization of Reactor Coolant Bleed Tanks "B" and "C" for Reactor Fuel	P. J. Babel	GPUN	MLR
4-257[c]	TB 87-14 Rev 0	06/87	SNM Accountability Summary for Makeup Pump Room B (AX006)	K. D. Auclair	GPUN	MLR
4-258[c]	TB 86-38 Rev 1	07/87	Summary of Fuel Quantities External to the Reactor Vessel	C. H. Distenfeld	GPUN	MLR
4-259[c]	TB-SNM-87-04	07/87	Seal Injection Filter (MU-F-4A/B) Room/AX026 SNM Accountability Summary	K. D. Auclair	GPUN	MLR
4-260	SNM 87-03 Rev. 0	07/87	Deborating Demineralizers SNM Accountability	P. J. Babel	GPUN	MLR
4-261[c]	SNM-87-02 Rev. 0	07/87	SNM Accountability Summary for Makeup Pump Room B	K. D. Auclair	GPUN	MLR
4-262[c]	EGG-TMI-7851	09/87	TMI-2 Fission Product Inventory Estimates (draft)	E. L. Tolman M. Nishio	EG&G	MLR
4-263[c]	SNM-87-4 Rev. 1	10/87	Seal Injection Filter (MU-F-4A/B Room/AX026 SNM Accountability Summary	K. D. Auclair	GPUN	MLR

a. Information Categories:

1-General TMI-2 Accident;
2-Reactor Vessel Region Examination;
3-RCS Region Fission Product Inventory Examinations, and
4-EX-RCS Fission Product Inventory Examinations (Includes General FPI [Source Term] References).

b. Company list

A&MS	Analysis and Measurement Services (Knoxville, TN)
ANL	Argonne National Laboratory
ANL-E	Argonne National Laboratory--East (Chicago area)
B&R	Burns & Roe Co.
B&W	Babcock & Wilcox Co.
BAPL	Bettis Atomic Power Laboratory
BCL	Battelle Columbus Laboratory
BNI	Bechtel National, Inc.
BNL	Brookhaven National Laboratory
EAI	ENERGEX Associates, Inc.
EG&G	Edgerton, Germeshausen and Grier, Inc.--Idaho
EG&G-EM	Edgerton, Germeshausen and Grier, Inc.--Energy Measurements (Las Vegas, NV)

b. Company list (continued)

EI	Energy Incorporated
EML	Environmental Measurements Laboratory
EPA	United States Environmental Protection Agency
EPA-EMSL-LV	United States Environmental Protection Agency Environmental Monitoring and Support Laboratory--Las Vegas, NV
EPRI	Electric Power Research Institute
ESA	Engineering Science and Analysis
FAI	Fauske and Associates Inc.
FMRC	Factory Mutual Research Corp. (Norwood, MA)
GPUN	General Public Utilities Nuclear
HEDL	Hanford Engineering and Development Laboratory
HEW	United States Department of Health, Education and Welfare
JCPL	Jersey Central Power and Light Co.
LANL	Los Alamos National Laboratory
LASL	Los Alamos Scientific Laboratory
LB&ERI	Lovelace Biomedical & Environmental Research Institute, Albuquerque, NM
LLNL	Lawrence Livermore National Laboratory
MEC	Metropolitan Edison Co.
MPR	MPR Associates
NAI	Nuclear Associates International
NCSI	Nuclear Consulting Services, Inc.
NRC	United States Nuclear Regulatory Commission: IE Office of Inspection and Enforcement; SIG Special Investigation Group; ONRR Office of Nuclear Reactor Regulation
NSAC	Nuclear Safety Analysis Center
NUS	Nuclear Services Corporation
NYU-MC	New York University Medical Center
ORNL	Oak Ridge National Laboratory
P-GC	Porter-Gertz Consultants
PEC	Philadelphia Electric Co.
PL&G	Pickard, Lowe & Garrick
PNL	Pacific Northwest Laboratories
PSI	Physical Sciences Incorporated
PSU-NED	Penn State University--Nuclear Engineering Dept.
Quadrex	Quadrex Corporation
RI	Rockwell International
RI-RHO	Rockwell International--Rockwell Hanford Operations
SAI	Science Applications Incorporated (Rockville, MD)
SNL	Sandia National Laboratories
TEC	Technology for Energy Corporation (Oak Ridge, TN)
TIO	EG&G Technical Integration Office
UE&C	United Engineers and Constructors
UKAEA	United Kingdom Atomic Energy Authority
V&A	Vance & Associates
W	Westinghouse

c. The publication's list of References has been used in generation of this list.

d. The document is in microfiche form.

APPENDIX B

TMI-2 SAMPLE EXAMINATION PLANS FOR CSNI

APPENDIX B

TMI-2 SAMPLE EXAMINATION PLAN FOR CSNI

This appendix describes the program of TMI-2 sample examinations to be performed by the Committee for the Safety of Nuclear Installations (CSNI) Joint Task Force on Three Mile Island 2. The examination program (a) will be conducted by the CSNI member countries and (b) is limited to the samples that were available for shipment in early 1987. Initially, EG&G Idaho prepared a "strawman plan of examinations of samples to be included in the first shipment taking into account the interests and the experimental facilities of the organizations concerned."[a] The plan included suggestions for examination results, report format, and extent. In February 1987, a conference of OECD and domestic experts was held to select samples for the OECD/CSNI TMI-2 sample examination program. One sample collection was packaged and shipped to Canada in a CNS 1-13C cask (June and July 1987). The other sample collection was packaged and shipped to the European countries in the French IU-04 cask (July and August 1987). Table B-1 is the list of samples that were furnished to the OECD/CSNI laboratories.

In FY 1988, the specific examination program for each sample will be developed.

---

a. OECD/NEA/CSNI document SEN/SIN(86)18, Summary Record of the First Meeting held at EG&G Idaho Offices, Idaho Falls, USA on April 28 and 29, 1986.

TABLE B-1. TMI-2 ACCIDENT SAMPLES FOR THE LABORATORIES OF THE OECD/CSNI JOINT TASK FORCE ON TMI-2

	Sample Number							
Sample Type	Canada	France	JRC	FRG-KFA	FRG-KFK	Sweden	Switzerland	United Kingdom
Reactor vessel lower head core debris (rocks)	7-1 11-5-F1	11-7-E			11-1-A 11-5-A 11-7-A	11-4-G		11-2-D
Upper core loose debris	H8 (36 cm) H8 (56 cm)	H8 (77 cm)	H8 (36 cm)					
Upper core fuel rod segments	4 (lower 1/2) 3-6 (btm 6 in.) 11-3 (btm 6 in.)	1/2 of 2 1/2 of 3-102	1/2 of 5 3-35 (btm 6 in.)	1/2 of 2 3-70 (btm 6 in.)	1/2 of 5 3-88 (btm 6 in.)			3-94 (btm 6 in.)
Upper core control rod segments				3-3 (btm 6 in.) 3-13 (btm 6 in.)	3-7 3-9 (btm 6 in.)			
Lower core fuel rod segments	G12-R8-8							K9-R14-4 K9-R14-5
Lower core burnable poison rod segments				G12-R16-2	G12-R13-4 G12-R16-4			
Core bore core sections	D8-P1-F D8-P3-A2 G12-P1-D5 K9-P1-H	D8-P1-E G12-P1-D1	D8-P2-B D8-P3-A1 O7-P4-E		D8-P1-A G12-P1-B K9-P1-F K9-P2-A O7-P4-B	D8-P3-C G12-P1-C2	G8-P11-H K9-P2-F	D8-P3-B G12-P1-C1 K9-P1-B K9-P2-B
Core bore rocks	D8-P4-B K9-P4-G	K9-P3-M O7-P5	G12-P2-E G12-P6-E G12-P9-B G12-P10-A N5-P1-E		D4-P1-B G8-P4-A G8-P5-A G12-P10-C K9-P3-B K9-P4-C N5-P1-B O7-P3 O7-P8-B	G12-P10-B	G8-P8-C	D4-P2-B K9-P3-G

APPENDIX C

TMI-2 CORE POSITION COMPONENT IDENTIFICATION MARKING

(GPUN Technical Bulletin 86)

TMI-2 TECHNICAL BULLETIN

SUBJECT: IDENTIFICATION NUMBERS ON CORE COMPONENTS

REFERENCES:

SUMMARY:

Attached is a summary of the identification numbers for fuel elements, control elements, and BPRA retainers. Also included are figures showing the location of these numbers on the component, and the original orientation of the component in the core grid array.

DISCUSSION:

This information was extracted from TMI-2 start-up information and was provided by Joe McCarthy of GPUN Fuel Management in Parsippany. It is provided for purposes of identifying the original location and orientation of components picked up during defueling.

0070233371

IMPLICATIONS & USE:

This information can be used by defueling operators and others to determine, for any components in the core, where it was located before the accident and how it was oriented in that location. For items which have the identifying mark, visual observation will allow a more complete accounting of canister or sample container contents for the permanent record.

ATTACHMENTS:

Table 1. Fuel Element Identification vs. Core Grid Position
Table 2. Control Element Identification
Table 3. BPRA Retainer Identification
Figure 1. Fuel Element ID Number Orientation
Figure 2. Control Element ID Number Orientation
Figure 3. Burnable Poison Rod Assembly Retainer ID

PREPARED BY: V. R. Fricke 8310
APPROVED BY: G. R. Ryan 8653 EXT.
APPROVED BY: R. H. Fillnov 8621
MANAGER, P P & A

TECHNICAL BULLETINS ARE ISSUED BY THE PROJECT PLANNING AND ANALYSIS DEPARTMENT TO QUICKLY COMMUNICATE TECHNICAL INFORMATION. THE INFORMATION IS CONTROLLED, AND WILL BE UPDATED AND/OR INCORPORATED INTO FORMAL DOCUMENTS AS APPROPRIATE.

ID of Fuel Element	Core Grid Location	ID of Fuel Element	Core Grid Location	ID of Fuel Element	Core Grid Location
NJ00E3	M7	NJ00QP	L4	NJ00RS	F7
NJ00PM	M4	NJ00QQ	F12	NJ00RT	K8
NJ00PN	E4	NJ00QR	M3	NJ00RU	K4
NJ00PP	E12	NJ00QS	E3	NJ00RV	L11
NJ00PQ	N11	NJ00QT	M13	NJ00RW	F3
NJ00PS	N12	NJ00QU	N10	NJ00RX	E6
NJ00PT	D12	NJ00QV	G3	NJ00RY	M10
NJ00PU	N4	NJ00QW	L10	NJ00RZ	N9
NJ00PV	D4	NJ00QX	G7	NJ00S0	G4
NJ00PW	C5	NJ00QY	H6	NJ00S1	D9
NJ00PX	O11	NJ00QZ	F8	NJ00S2	H3
NJ00PY	C11	NJ00R1	M9	NJ00S3	L9
NJ00PZ	E13	NJ00R2	G5	NJ00S4	F9
NJ00Q0	O5	NJ00R4	K5	NJ00S6	M8
NJ00Q1	N6	NJ00R5	O9	NJ00S7	F11
NJ00Q2	D10	NJ00R6	F6	NJ00S8	M6
NJ00Q3	L12	NJ00R7	O7	NJ00S9	O6
NJ00Q4	D6	NJ00R8	E11	NJ00SA	L13
NJ00Q5	F4	NJ00R9	M11	NJ00SB	K12
NJ00Q6	M5	NJ00RA	H12	NJ00SC	C10
NJ00Q7	K3	NJ00RB	N8	NJ00SG	N5
NJ00Q8	C7	NJ00RC	D8	NJ00SH	H7
NJ00Q9	K13	NJ00RD	H4	NJ00SJ	H9
NJ00QA	G13	NJ00RE	P7	NJ00SK	L7
NJ00QB	C9	NJ00RF	B9	NJ00SL	K10
NJ00QC	K11	NJ00RG	L3	NJ00SM	G10
NJ00QD	K7	NJ00RH	F13	NJ00SN	C6
NJ00QE	G9	NJ00RJ	K14	NJ00SP	P9
NJ00QF	H10	NJ00RK	G14	NJ00SQ	G2
NJ00QG	E7	NJ00RL	B7	NJ00SR	L5
NJ00QH	G11	NJ00RM	K2	NJ00SS	G12
NJ00QJ	E9	NJ00RN	F5	NJ00ST	O8
NJ00QK	F10	NJ00RO	L8	NJ00SU	O10
NJ00QL	L6	NJ00RP	G8	NJ00SV	N7
NJ00QN	E5	NJ00RQ	G6	NJ00SW	D7
NJ00QN	K9	NJ00RR	H8	NJ00SX	H13

00702371

ID of Fuel Element	Core Grid Location	ID of Fuel Element	Core Grid Location
NJ00SY	C8	NJ00U1	B11
NJ00SZ	E8	NJ00U2	E2
NJ00T0	E10	NJ00U3	R9
NJ00T1	H5	NJ00U4	B12
NJ00T2	H11	NJ00U5	E14
NJ00T3	K6	NJ00U6	P5
NJ00T4	D11	NJ00U7	P11
NJ00T5	D5	NJ00U8	O3
NJ00T6	M12	NJ00U9	N3
NJ00T7	C4	NJ00UA	B10
NJ00T8	D13	NJ00UB	B8
NJ00T9	O12	NJ00UC	A8
NJ00TA	D3	NJ00UC	B6
NJ00TB	C12	NJ00UD	R8
NJ00TC	A9	NJ00UE	H14
NJ00TD	D14	NJ00UF	H2
NJ00TE	N14	NJ00UH	N13
NJ00TF	A6	NJ00UJ	O4
NJ00TF	C13	NJ00UK	L2
NJ00TG	F15	NJ00UL	L14
NJ00TH	R6	NJ00UM	P8
NJ00TJ	L15	NJ00UN	P10
NJ00TK	R10	NJ00UO	M2
NJ00TL	R7	NJ00UP	P6
NJ00TM	G1	NJ00UQ	F14
NJ00TN	F1	NJ00UR	F2
NJ00TQ	L1	NJ00US	G15
NJ00TR	D2	NJ00UT	B4
NJ00TS	C3	NJ00UU	H1
NJ00TT	O13	NJ00UV	K15
NJ00TU	M14	NJ00UW	K1
NJ00TV	P4	NJ00UX	B5
NJ00TW	A10	NJ00UY	H15
NJ00TX	P12		
NJ00TY	A7		
NJ00TZ	N2		

00702 3371

Control Element	ID of Cont. Element	Core Grid Location	Control Element	ID of Cont. Element	Core Grid Location
SU SOURCE	03AT	B12	BPRA	B166	O4
SU SOURCE	03AU	P4	BPRA	B167	O6
APSRA	A017	D10	BPRA	B168	D3
APSRA	A018	F12	BPRA	B169	D13
APSRA	A019	L12	BPRA	B170	O12
APSRA	A020	N10	BPRA	B171	F3
APSRA	A021	N6	BPRA	B172	O8
APSRA	A022	L4	BPRA	B173	C10
APSRA	A023	F4	BPRA	B174	C6
APSRA	A024	D6	BPRA	B175	N3
BPRA	B139	G10	BPRA	B176	G12
BPRA	B140	P9	BPRA	B177	C8
BPRA	B141	K6	BPRA	B178	O10
BPRA	B142	H9	BPRA	B179	K12
BPRA	B143	H7	BPRA	B180	N7
BPRA	B144	K8	BPRA	B181	N9
BPRA	B145	G6	BPRA	B182	F13
BPRA	B146	F7	BPRA	B183	D9
BPRA	B147	G2	BPRA	B184	H13
BPRA	B148	P7	BPRA	B185	G4
BPRA	B149	G8	BPRA	B186	H3
BPRA	B150	L9	BPRA	B187	E8
BPRA	B151	K14	BPRA	B188	H11
BPRA	B152	K2	BPRA	B189	H5
BPRA	B153	B7	BPRA	B190	N13
BPRA	B154	K10	BPRA	B191	M10
BPRA	B155	F9	BPRA	B192	L5
BPRA	B156	L7	BPRA	B193	M4
BPRA	B157	G14	BPRA	B194	M6
BPRA	B158	B9	BPRA	B195	E6
BPRA	B159	M8	BPRA	B196	N11
BPRA	B160	D7	BPRA	B197	D5
BPRA	B161	K4	BPRA	B198	E4
BPRA	B162	L3	BPRA	B199	L11
BPRA	B163	C12	BPRA	B200	D11
BPRA	B164	C4	BPRA	B201	F11
BPRA	B165	L13	BPRA	B202	F5

00702337 1

Control Element	ID of Cont. Element	Core Grid Location	Control Element	ID of Cont. Element	Core Grid Location
BPRA	B203	N5	CRA	C156	C11
BPRA	B204	E10	CRA	C157	E13
BPRA	B205	M12	CRA	C158	M13
BPRA	B206	E12	CRA	C159	O11
CRA	C123	H8	CRA	C160	O5
CRA	C124	B8	CRA	C161	M3
CRA	C125	H14	CRA	C162	E3
CRA	C126	P8	CRA	C163	C5
CRA	C127	H2	CRA	C164	E9
CRA	C128	E11	CRA	C165	G11
CRA	C129	M11	CRA	C166	K11
CRA	C130	M5	CRA	C167	M9
CRA	C131	E5	CRA	C168	M7
CRA	C132	B10	CRA	C169	K5
CRA	C133	F14	CRA	C170	G5
CRA	C134	L14	CRA	C171	E7
CRA	C135	P10	CRA	C172	C9
CRA	C136	P6	CRA	C173	G13
CRA	C137	L2	CRA	C174	K13
CRA	C138	F2	CRA	C175	O9
CRA	C139	B6	CRA	C176	O7
CRA	C140	F8	CRA	C177	K3
CRA	C141	H10	CRA	C178	G3
CRA	C142	L8	CRA	C179	C7
CRA	C143	H6	CRA	C180	G9
CRA	C144	D8	CRA	C181	K9
CRA	C145	H12	CRA	C182	K7
CRA	C146	N8	CRA	C183	G7
CRA	C147	H4			
CRA	C148	F10			
CRA	C149	L10			
CRA	C150	L6			
CRA	C151	F6			
CRA	C152	D12			
CRA	C153	N12			
CRA	C154	N4			
CRA	C155	D4			

00702371

Control Element	ID of Retainer	Core Grid Location	Control Element	ID of Retainer	Core Grid Location
SU SOURCE	L004	B12	BPRA	L042	H11
SU SOURCE	L005	P4	BPRA	L043	H13
BPRA	L007	B7	BPRA	L044	K2
BPRA	L008	B9	BPRA	L045	K4
BPRA	L009	C4	BPRA	L046	K6
BPRA	L010	C6	BPRA	L047	K8
BPRA	L011	C8	BPRA	L048	K10
BPRA	L012	C10	BPRA	L049	K12
BPRA	L013	C12	BPRA	L050	K14
BPRA	L014	D3	BPRA	L051	L3
BPRA	L015	D5	BPRA	L052	L5
BPRA	L016	D7	BPRA	L053	L7
BPRA	L017	D9	BPRA	L054	L9
BPRA	L018	D11	BPRA	L055	L11
BPRA	L019	D13	BPRA	L056	L13
BPRA	L020	E4	BPRA	L057	M4
BPRA	L021	E6	BPRA	L058	M6
BPRA	L022	E8	BPRA	L059	M8
BPRA	L023	E10	BPRA	L060	M10
BPRA	L024	E12	BPRA	L061	M12
BPRA	L025	F3	BPRA	L062	N3
BPRA	L026	F5	BPRA	L063	N5
BPRA	L027	F7	BPRA	L064	N7
BPRA	L028	F9	BPRA	L065	N9
BPRA	L029	F11	BPRA	L066	N11
BPRA	L030	F13	BPRA	L067	N13
BPRA	L031	G2	BPRA	L068	O4
BPRA	L032	G4	BPRA	L069	O6
BPRA	L033	G6	BPRA	L070	O8
BPRA	L034	G8	BPRA	L071	O10
BPRA	L035	G10	BPRA	L072	O12
BPRA	L036	G12	BPRA	L073	P7
BPRA	L037	G14	BPRA	L074	P9
BPRA	L038	H3			
BPRA	L039	H5			
BPRA	L040	H7			
BPRA	L041	H9			

00702337 1

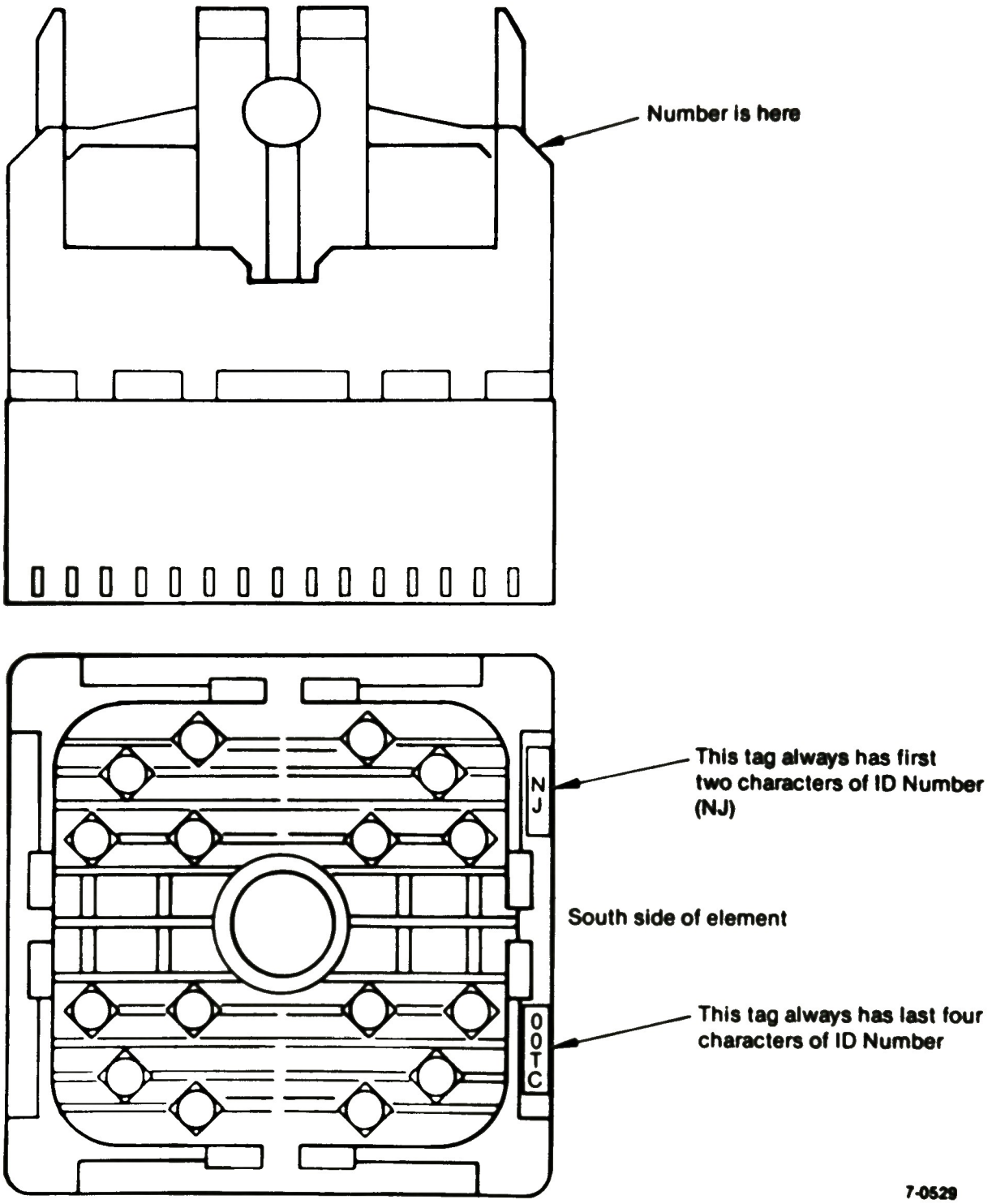

Figure C-1. Fuel element ID number orientation.

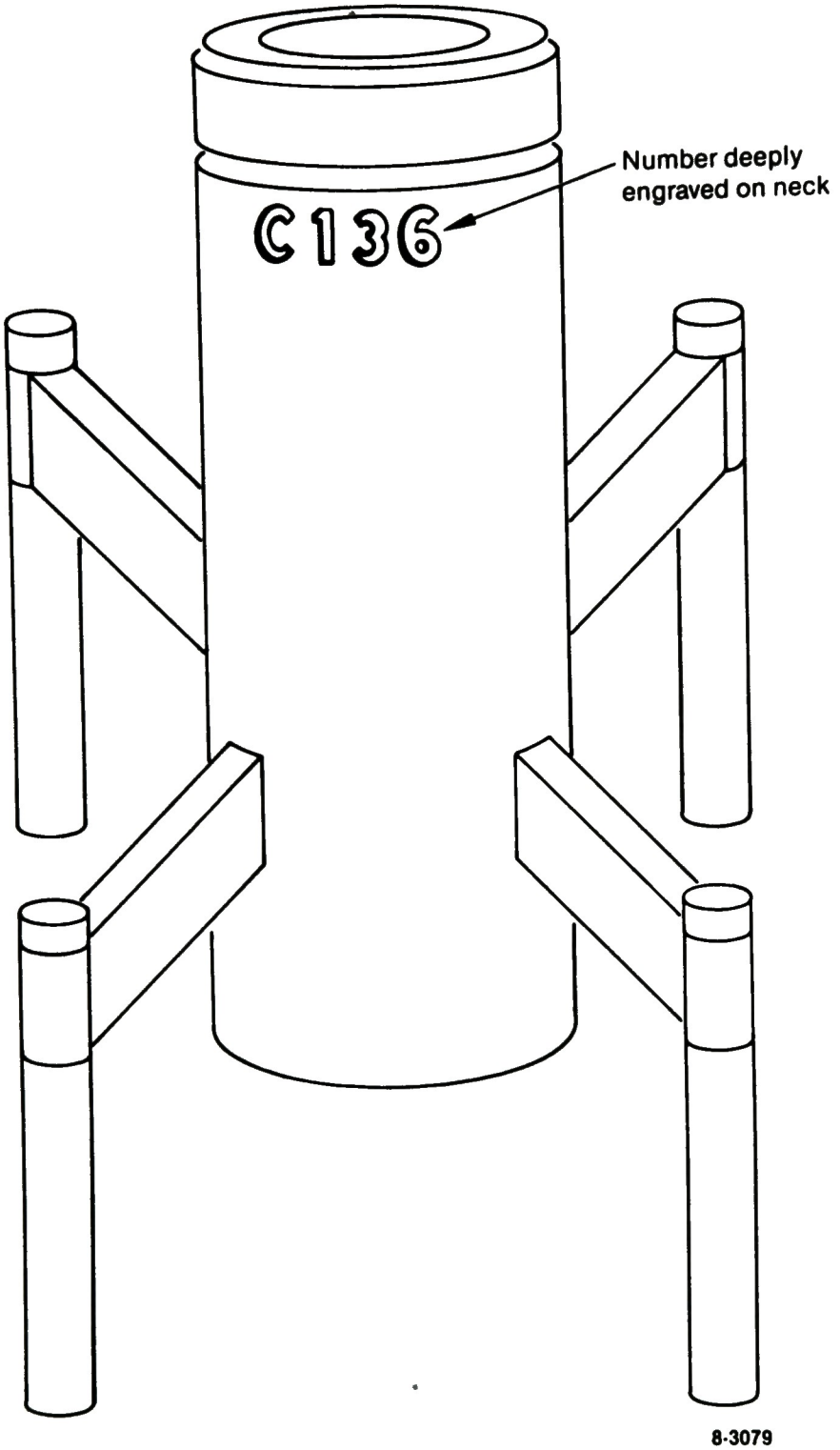

Figure C-2. Control element ID number orientation.

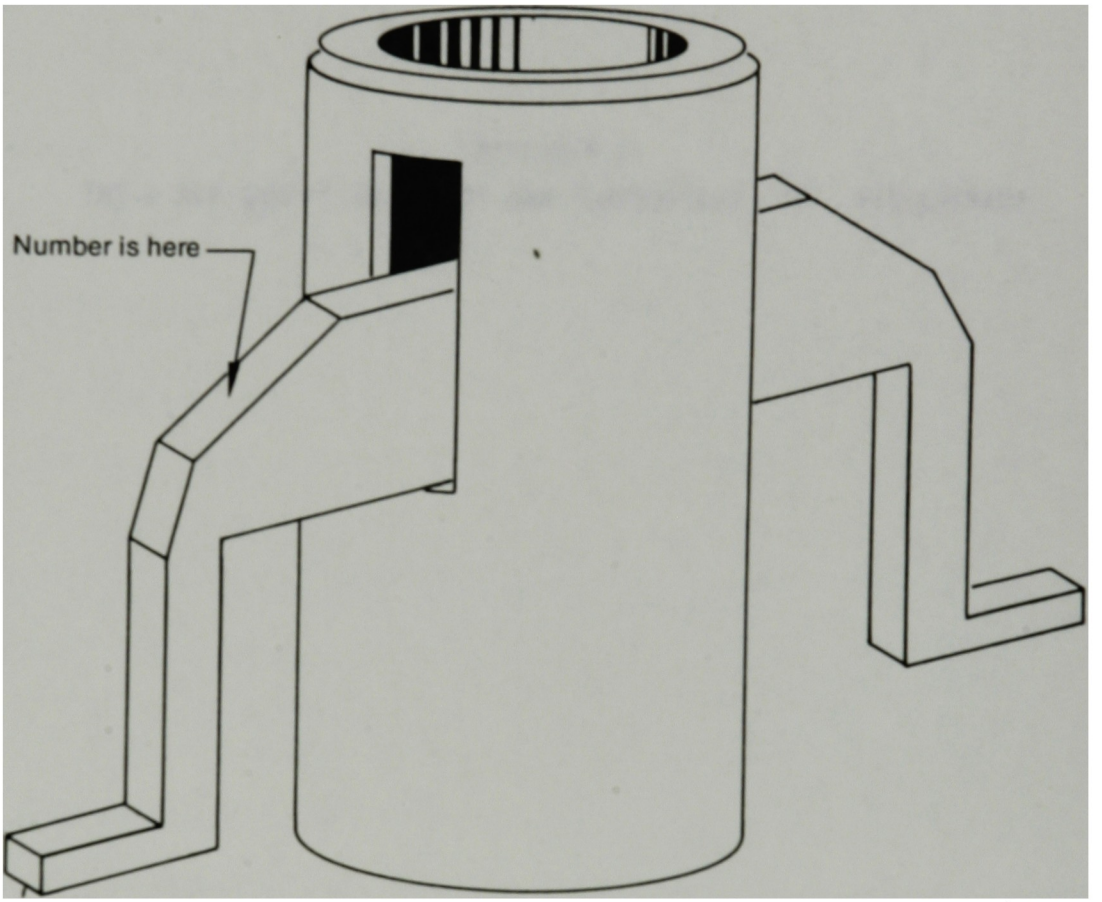

8-3080

Figure C-3. Burnable poison rod assembly retainer.

APPENDIX D

TMI-2 AEP SAMPLE INVENTORY AND DISPOSITION LIST--PRELIMINARY

APPENDIX D

TMI-2 AEP SAMPLE INVENTORY AND DISPOSITION LIST--PRELIMINARY

Index

A. Ex-Reactor-Coolant-System Characterization 1

1. Auxiliary and Fuel Handling Buildings 1
2. Reactor Building 2

B. Reactor Coolant System (RCS) Characterization 3

1. RCS Surface Deposits 3
2. RCS Sediment 4

C. Reactor Vessel Internals Examinations 5

1. Control Rod Leadscrews 5
2. Leadscrew Support Tube Lower Section 8

D. Core Material Samples from Lower Head Region 9

1. South Area 9
2. Southeast Area 9

E. Upper Core Loose Debris 12

1. Core Position E9 12
2. Core Position H8 13
3. Large Volume Samples Retrieved in May 1986 14

F. Core Distinct Components 15

1. Upper Core Region 15
2. Lower Core Region 21

G. Fused-Together Core Materials 30

1. Core Bore Cores 30
2. Core Bore Rocks 32
3. Fuel Canister D-174 Rocks 37
4. CNS 1-13C 6/87 Shipment, H9/K9 Core Position Rocks 38

Sample Description	Sample Number	Location or Status: Laboratory	Building	Container	Disposition Recommendation
A. Ex-Reactor-Coolant-System Characterization:					
1. Auxiliary and fuel handling buildings:					
a. Liquid:					
(1) Reactor coolant bleed Tank A (125 mL)	?				Consumed
(2) Reactor coolant bleed Tank B (150 mL)	?				Consumed
(3) Reactor coolant bleed Tank C (150 mL)	?				Consumed
(4) Makeup and purification demineralizer B (40 mL)	?				Consumed
(5) Neutralizer tank	?	INEL	TRA-657-PSA	Shielded 55 gal drum #WDL-T-88	RWMC
b. Sediment:					
(1) Reactor coolant bleed Tank A (60 g)	?				Consumed
(2) Makeup and purification demineralizer A (resin) (10 g)	?				Consumed
(3) Makeup and purification demineralizer B (resin) (40 mL)	?				Consumed
c. Filter housing contents (filter paper, liquid, and collected solids):					
(1) Makeup and purification system					
(a) Demineralizer prefilters	?				Consumed

Sample Description	Sample Number	Location or Status: Laboratory	Building	Container	Disposition Recommendation
A 1. (continued)					
(b) Demineralizer after filter	?				Consumed
(2) RC pump seal water injection system filters	?				Consumed
2. Reactor building:					
a. Liquid:					
(1) Basement 305 ft el. (110 mL)	?				Consumed
(2) Basement 325 ft el. (120 mL)	?				Consumed
(3) Bottom open stairwell (45 mL)	?				Consumed
(4) Basement sump pit (200 mL)	?				Consumed
(5) Reactor coolant drain tank (120 mL)	?				Consumed
b. Sediment:					
(1) Basement 305 ft el. (108 g)	?				Consumed
(2) Basement 325 ft el. (25 g)	?				Consumed
(3) Bottom open stairwell (1 g)	?				Consumed
(4) Basement sump pit (72 g)	?	INEL	TRA-657-PSA	55 gal drum	RMWC
(5) Reactor coolant drain tank (0.5 mg)	?				Consumed

Sample Description	Sample Number	Location or Status: Laboratory	Building	Container	Disposition Recommendation
A.2.b. (continued)					
(6) Basement floor (282 ft el.) outside D-ring areas:	#1 Sludge Liquid #2 Sludge Liquid				Assumed that examining laboratory (SAI) destroyed. Assumed that examining laboratory (SAI) destroyed.
c. Concrete bores:					
(1) Floors: 347 ft el. (8) 305 ft el. (6)	? ?				Consumed Consumed
(2) Basement walls:					
D-ring wall:	A-1439, B-2	INEL	TRA-657	TBD	RWMC
	C-54	INEL	TRA Hot Cell	General Debris Container No. 3	Ship to Netherlands
	INT 80	INEL	TRA Hot Cell	General Debris Container No. 3	Ship to Netherlands
3000 psi wall:	A-1440, A1	INEL	TRA-657	TBD	RWMC
Block:	SUB-2	INEL	TRA-657	TBD	RWMC
	UB-6	INEL	TRA Hot Cell	General Debris Container No. 3	Ship to Netherlands
	C-3-3	INEL	TRA Hot Cell	General Debris Container No. 3	Ship to Netherlands
d. Air cooler panels (5 30 x 40 in.) surface deposits	???	INEL			Samples and panels destroyed
B. Reactor Coolant System (RCS) Characterization:					
1. RCS surface deposits:					
a. A-loop RTD thermowell	N/A	INEL			Assumed destroyed.
b. A-loop S.G. manway cover backing plate	N/A	BCD	W.J. Hot Cell	TBD	Destroy after 11/87.
c. A-loop S.G. handhole cover liner	N/A	BCD	W.J. Hot Cell	TBD	Destroy after 11/87.
d. B-loop S.G. manway cover backing plate	N/A	BCD	W.J. Hot Cell	TBD	Destroy after 11/87.
e. Pressurizer manway cover backing plate	N/A	BCD	W.J. Hot Cell	TBD	Destroy after 11/87.

Sample Description	Sample Number	Location or Status: Laboratory	Building	Container	Disposition Recommendation
B. (continued)					
2. RCS Sediment:					
a. A-loop S.G. tube sheet top loose debris:					
(1) Particle 1 (8.0 g, 5.4 g/cc)	ASG-P1	INEL	TRA-657 (a wing)		Retain portion at TRA-657.
(2) Particle 2 (0.6 g, 4.9 g/cc)	ASG-P2	INEL	TRA -657 (a wing)		Retain portion at TRA-657.
b. B-loop S.G. Tube sheet top loose debris:					
(1) INEL Collection:					
(a) >1000 µm (in solution)	N/A	INEL	TRA-657, PSAM	5 gal black bucket	TAN-607 storage pool.
(b) 1000 to 710 µm (in solution)	N/A	INEL	TRA-657, PSAM	5 gal black bucket	TAN-607 storage pool.
(c) 300 to 150 µm (in solution)	N/A	INEL	TRA-657, PSAM	5 gal black bucket	TAN-607 storage pool.
(d) <150 µm (in solution)	N/A	INEL	TRA-657, PSAM	5 gal black bucket	TAN-607 storage pool.
(2) B&W Collection:					
(a) >1000 µm:					
i. Particle 1	TBD	B&W	HCF		TBD
ii. Particle 2	TBD	B&W	HCF		TBD
iii. Particle 3	TBD	B&W	HCF		TBD
iv. Particle 4	TBD	B&W	HCF		TBD
v Particle 5	TBD	B&W	HCF		TBD
vi. Particle 6	TBD	B&W	HCF		TBD
vii Particle 7	TBD	B&W	HCF		TBD

Sample Description	Sample Number	Location or Status: Laboratory	Building	Container	Disposition Recommendation
B.2.b.(2)(a) (continued)					
viii. Particle 8	TBD	B&W	HCF		TBD
ix. Particle 9	TBD	B&W	HCF		TBD
x. Particle 10	TBD	B&W	HCF		TBD
xi. Particle 11	TBD	B&W	HCF		TBD
xii. Particle 12	TBD	B&W	HCF		TBD
xiii. Balance	TBD	B&W	HCF		TBD
(b) 1000 to 710 μm	TBD	B&W	HCF		TAN-607 Storage Pool.
(c) 710 to 300 μm	TBD	B&W	HCF		TAN-607 Storage Pool.
(d) 310 to 150 μm	TBD	B&W	HCF		TAN-607 Storage Pool.
(e) <150 μm	TBD	B&W	HCF		TAN-607 Storage Pool.
(f) Filter and fines	TBD	B&W	HCF		TAN-607 Storage Pool.
C. Reactor Vessel Internals Examinations:					
1. Control rod leadscrews:					
a. H8:					
(1) H8-1 (304 SS)	N/A	INEL	TAN (outside	TSC	RWMC
(2) H8-2 (32 in. long):	Sample 17 (17-4) (ann.)	INEL	IRC, Rm 218	Korth file cab.	Retain at IRC.
	Sample 18 (17-4)[a]	INEL			RWMC
	Sample 19 (17-4) (ann.)	INEL	IRC, Rm 218	Korth file cab.	Retain at IRC.
	Sample 20 (17-4) (ann.)	INEL	IRC, Rm 218	Korth file cab.	Retain at IRC.
	Sample 21 (304) (ann.)	INEL	IRC, Rm 218	Korth file cab.	Retain at IRC.

Sample Description	Sample Number	Location or Status: Laboratory	Building	Container	Disposition Recommendation
C.1 a (2) (continued)					
	Sample 22 (17-4) (ann.)	INEL	IRC, Rm 218	Korth file cab.	Retain at IRC.
	Sample 23 (304)	--b			
(3) HB-3	INEL	TAN (outside)		TSC	RWMC
(4) HB-4		PNL			
(5) HB-5		B&W			
(6) HB-6		GPUN			
(7) HB-7 (17-4 PH, 45 in. long):	Sample 9 (comb)[a]	INEL			RWMC
	Sample 10 (comb)	--b			
	Sample 11a met		IRC, Rm 218	Korth file cab.	Retain at IRC.
	Sample 12	INEL (assumed)	TRA-657	--b	RWMC
	Sample 13e (met)	INEL	IRC, Rm 218	Korth file cab.	Retain at IRC.
	Sample 14	INEL (assumed)	TRA-657	--b	RWMC
	Sample 15a met	INEL	IRC, Rm 218	Korth file cab.	Retain at IRC.
	Sample 16e (met)	INEL	IRC, Rm 218	Korth file cab.	Retain at IRC.
	DECON 7	--b			
	DECON 8	--b			
	DECON 9	--b			
	DECON 10	--b			

Sample Description	Sample Number	Location or Status: Laboratory	Building	Container	Disposition Recommendation
C.1.a. (continued)					
(8) H8-8 (304 SS--48 in. long):	DECON 3	--[b]			
	DECON 4	--[b]			
	DECON 5	--[b]			
	DECON 6	--[b]			
(9) H8-9 (32 in. long):	Sample 1 (17-4)[a]				RWMC
	Sample 2a (17-4) met	INEL	IRC, Rm 218	Korth file cab.	Retain at IRC.
	Sample 3e (17-4) met		IRC, Rm 218	Korth file cab.	Retain at IRC.
	Sample 4d (17-4) met	INEL	IRC, Rm 218	Korth file cab.	Retain at IRC.
	Sample 5 (17-4)[a]	--[b]			
	Sample 6 (comb)[a]	--[b]			
	Sample 7a (304) met		IRC, Rm 218	Korth file cab.	Retain at IRC.
	Sample 7b (410)	INEL (assumed)	TRA-657	--[b]	RWMC
	Sample 7c (304)	INEL (assumed)	TRA-657	--[b]	RWMC
	Sample 8[a] (17-4)	--[b]			
b. B8:					
(1) B8-1 (48 in. long):	Sample 6 (17-4)[a]	INEL (assumed)	TRA-657	--[b]	RWMC
	Sample 7a (17-4) met	INEL	IRC, Rm 218	Korth file cab.	Retain at IRC.
	Sample 8d (17-4) met	INEL	IRC, Rm 218	Korth file cab.	Retain at IRC.

Sample Description	Sample Number	Location or Status: Laboratory	Building	Container	Disposition Recommendation
C 1 b.(1) (continued)					
	Sample 9 (17-4)[a]	INEL (assumed)	TRA-657	--[b]	RWMC
(2) BB-2 (304 SS)	--	INEL	TAN (outside)	TSC	RWMC
(3) BB-3 (comb.) (48 in. long):	Sample 1 (17-4)	INEL (assumed)	TRA-657	--[b]	RWMC
	Sample 2a (17-4) met	INEL	IRC, Rm 218	Korth file cab.	Retain at IRC.
	Sample 3d (17-4) met	INEL	IRC, Rm 218	Korth file cab.	Retain at IRC.
	Sample 4 (17-4)[a]	INEL (assumed)	TRA-657	--[b]	RWMC
	Sample 5 (304)[a]	--[b]			
	Sample 5a (304) met	INEL	IRC, Rm 218	Korth file cab.	Retain at IRC.
	Sample 5b (304)	--[b]			
(4) BB-4		INEL	TAN (outside)	TSC	RWMC
(5) BB-5		INEL	TAN (outside)	TSC	RWMC
(6) BB-6		INEL	TAN (outside)	TSC	RWMC
(7) BB-7		--[b]			
c. E9	N/A	INEL	TAN (outside)	TSC	RWMC
2. Leadscrew support tube lower section:	Ring 1	BCD	W.J. Hot Cell		BCD destroy.
	Ring 2	BCD	W.J. Hot Cell		BCD destroy.
	Ring 3[a]	BCD	W.J. Hot Cell		BCD destroy.
	Ring 4	BCD	W.J. Hot Cell		BCD destroy.
	Ring 5	BCD	W.J. Hot Cell		BCD destroy.
	Ring 6	BCD	W.J. Hot Cell		BCD destroy.
	Ring 7[a]	BCD	W.J. Hot Cell		BCD destroy.

Sample Description	Sample Number	Location or Status: Laboratory	Building	Container	Disposition Recommendation
D. Core Material Samples from Lower Head Region:					
1. South area:					
a. 7-1 (50.1 g)	7-1-A	ANL-E		1-1/4 dia. met mount	TBD
	7-1-B	INEL	TRA-657 PSAN Cave #1	1 pt paint can 7-1-B	TAN Hot Shop Pool.
	7-1-C	--[b]			
	7-1-D	--[b]			
	7-1-E	--[b]			
b. 7-6 (1.0 g):	--	--[b]			
c. 7-6 (0.4 g):	--	--[b]			
d. 7-7	7-7	INEL	TRA Hot Cell 1	Bucket TMI-2 Core Bore G8-P11	TAN Hot Shop Pool.
e. 7-8	7-8	INEL	TRA HC-back area	Can	TAN Hot Shop Pool.
2. Southeast area:					
a. 11-1 (39.7 g):	11-1-A	--[b]	TRA-657		TAN Hot Shop Pool.
	11-1-B	ANL-E		1-1/4 dia. met mount	TBD
	11-1-C	INEL	TRA-657 PSAN cave #1	1 pt paint can 11-1-C	TAN Hot Shop Pool.
	11-1-D	INEL	TRA Hot Cell 3 back area	Can 11-4E, 11-4F, 11-6C, 11-1D	TAN Hot Shop Pool.
b. 11-2 (123.9 g):	11-2-A	INEL	TRA Hot Cell 3 back area	Can 11-2A	TAN Hot Shop Pool.
	11-2-B	INEL	TRA-657 PSAN cave #1	1 gal can 11-5-B, 11-4-A, 11-2-B, 11-7-D, 11-7-B with shielding	TAN Hot Shop Pool.
	11-2-B microcore	ANL-E			
	11-2-C	INEL	TRA-657 PSAN cave #1	1 qt paint can 11-2-C	TAN Hot Shop Pool.
	11-2-D	--[b]			

Sample Description	Sample Number	Location or Status: Laboratory	Building	Container	Disposition Recommendation
D.2 (continued)					
c. 11-4 (107.1 g):	11-4-A	INEL	TRA-657 PSAM cave #1	1 gal can 11-5-B, 11-4-A, 11-2-B, 11-7-D, 11-7-B with shielding	TAN Hot Shop Pool.
	11-4-A microcore	ANL-E			
	11-4-B	INEL	TRA-657 PSAM cave #1	1 qt paint can 11-4-B	TAN Hot Shop Pool.
	11-4-C	ANL-E		1-1/4 dia met mount	TBD
	11-4-D	INEL	TRA-657 PSAM cave #1	1 gal can 11-4-D without shielding	TAN Hot Shop Pool.
	11-4-E	INEL	TRA Hot Cell 3	Can 11-4E, 11-4F, 11-6C, 11-1D	TAN Hot Shop Pool.
	11-4-F	INEL	TRA Hot Cell 3	Can 11-4E, 11-4F, 11-6C, 11-1D	TAN Hot Shop Pool.
d. 11-5 (553.9 g):	11-5-A	--b			
	11-5-B:	INEL	TRA-657 PSAM cave #1	1 gal can 11-5-B, 11-4-A, 11-2-B, 11-7-D, 11-7-B with shielding	TAN Hot Shop Pool.
	11-5-B1 microcore	ANL-E			TBD
	11-5-B2 microcore	ANL-E			TBD
	11-5-B2 microcore	ANL-E			TBD
	11-5-B4 microcore	ANL-E			TBD
	11-5-B5 microcore	ANL-E			TBD
	11-5-C	INEL	TRA-657 PSAM cave #1	1 gal can 11-5-C with shielding	TAN Hot Shop Pool.
	11-5-D	INEL	TRA Hot Cell 3 back area	Can labeled 11-5-E loose, 11-5-D loose, 11-5-E1 vial	TAN Hot Shop Pool.

Sample Description	Sample Number	Location or Status: Laboratory	Building	Container	Disposition Recommendation
D.2. (continued)					
	11-5-E1	INEL	TRA Hot Cell 3 back area	Can labeled 11-5-E loose, 11-5-D loose, 11-5-E1 vial	TAN Hot Shop Pool.
	11-5-E2	INEL	TRA Hot Cell 3	Can labeled 11-5-E loose, 11-5-D loose, 11-5-E1 vial	TAN Hot Shop Pool.
	11-5-E3	--[b]			
	11-5-E4	--[b]			
e. 11-6 (12.9 g):	11-6-A	ANL-E		1-1/4 dia met mount	TBD
	11-6-B	INEL	TRA-657 PSAN cave #1	1 pt paint can 11-6-B	TAN Hot Shop Pool.
	11-6-C	INEL	TRA Hot HC 3 service area	Gallon can 11-4-E, 11-4-F, 11-6-C, 11-1D	TAN Hot Shop Pool.
f. 11-7 (118.8 g):	11-7-A	--[b]			
	11-7-B	INEL	TRA-657 PSAN cave #1	1 gal can 11-5-B, 11-4-A, 11-2-B, 11-7-D, 11-7-B with shielding	TAN Hot Shop Pool.
	11-7-B microcore	ANL-E			TBD
	11-7-C	INEL	TRA-657 PSAN cave #1	1 qt paint can 11-7-C	TAN Hot Shop Pool.
	11-7-D	INEL	TRA-657 PSAN cave #1	1 gal can 11-5-B, 11-4-A, 11-2-B, 11-7-D, 11-7-B with shielding	TAN Hot Shop Pool.
	11-7-E	--[b]			
g. 11-8 (22.5 g)	11-8-P1 (10.1 g, 7.4 g/cc)	INEL	TRA Hot Cell		Retain at TRA-657.
	11-8-P2 (7.3 g, 8.1 g/cc)	INEL	TRA Hot Cell		Retain at TRA-657.
	11-8-P3 (5.1 g, 7.9 g/cc)	INEL	TRA Hot Cell		Retain at TRA-657.

Sample Description	Sample Number	Location or Status: Laboratory	Building	Container	Disposition Recommendation
E. Upper Core Loose Debris					
1. Core Position E9					
a. Surface (17 g):	4 (remnant)	INEL	TRA-657 PSAM	Drum #3	TAN Hot Shop Pool.
	4A (met mount)	ANL-E			
	4B (met mount)	ANL-E			
	4C (met mount)	ANL-E			
b. 8 cm deep (91 g):	5 (remnant)	INEL	TRA-657 PSAM	Drum #3	TAN Hot Shop Pool.
	5E (met mount)	ANL-E			
	217 (pyro)	INEL	TRA-657		TAN Hot Shop Pool.
	220 (pyro)	INEL	TRA-657		TAN Hot Shop Pool.
	225 (pyro)	INEL	TRA-657		TAN Hot Shop Pool.
	22X (pyro)	INEL	TRA-657		TAN Hot Shop Pool.
c. 56 cm deep (14 g):	6 (remnant)	INEL	TRA-657 PSAM?	Drum #6	
	6 (X g)	HEDL			
	6B (met mount)	INEL	--b		Retain at TRA-657 if found.
	6C (met mount)	ANL-E			
	6D (met mount)	ANL-E			
	6E (met mount)	INEL	--b		Retain at TRA-657 if found.
	6F (met mount)	INEL	--b		
d. 74 cm deep (174 g):	10 (remnant)	INEL	TRA-657 PSAM	Drum #1	TAN Hot Shop Pool.
	10-325	INEL	TRA Hot Cell-1	Canister Alpha Wing 325 mesh	TAN Hot Shop Pool.
	10A (met mount)	ANL-E			
	10E (met mount)	ANL-E			
	10F (met mount)	ANL-E			

Sample Description	Sample Number	Location or Status: Laboratory	Location or Status: Building	Location or Status: Container	Disposition Recommendation
E.1. (continued)					
e. 94 cm deep (149 g):	11 (10g remnant)	INEL	TRA-657 Cave #1	1 gal Pb shielded can	TAN Hot Shop Pool.
	Leach (90 g)	INEL	TRA-657		RWMC
	11B (met mount)	ANL-E			
	11C (met mount)	ANL-E			
2. Core Position H8:					
a. Surface (71 g):	1 (remnant)	INEL	TRA-657? PSAN	Drum #3	TAN Hot Shop Pool.
	1 (20 g)	HEDL			
	1A (met mount)	INEL	--[b]		Retain at TRA-657 if found.
	1B (met mount)	ANL-E			
	1E (met mount)	INEL	--[b]		Retain at TRA-657 if found.
	1H (met mount)	INEL	--[b]		Retain at TRA-657 if found.
b. 8 cm deep (? g)	2	B&W			
c. 36 cm deep (136 g):	7 (remnant)	INEL	TRA-657		TAN Hot Shop Pool.
	7 (23.1 g)	CSNI-JRC			
	7 (? g)	CSNI-Canada			
	7A (met mount)	ANL-E			
	7B (met mount)	ANL-E			
	7E met mount)	ANL-E			
d. 56 cm deep (153 g):	3 (remnant)	INEL	TRA-657		TAN Hot Shop Pool.
	3 (8.8 g)	HEDL			
	3L (met mount)	ANL-E			
	3M (met mount)	ANL-E			

Sample Description	Sample Number	Location or Status: Laboratory	Building	Container	Disposition Recommendation
E.2 d (continued)					
e. 70 cm deep (153 g):	8 (remnant)	INEL	TRA-657		TAN Hot Shop Pool.
	8A (met mount)	ANL-E			
	8C (met mount)	ANL-E			
	8E (met mount)	ANL-E			
	8H (met mount)	ANL-E			
f. 77 cm deep (153 g):	9 (remnant)	INEL	TRA-657		TAN Hot Shop Pool.
	9 (29 g)	CSNI-France			
	9-2	INEL	TRA Hot Cell #1 Can #9		TAN Hot Shop Pool.
	9-3	INEL	TRA Hot Cell #1 Can #9		TAN Hot Shop Pool.
	9-4	INEL	TRA Hot Cell #1 Can #9		TAN Hot Shop Pool.
	9-5	INEL	TRA Hot Cell #1 Can #9		TAN Hot Shop Pool.
	9-6	INEL	TRA Hot Cell #1 Can #9		TAN Hot Shop Pool.
	9-7	INEL	TRA Hot Cell #1 Can #9		TAN Hot Shop Pool.
	9D (met mount)	ANL-E			
	9G (met mount)	ANL-E			
3. Large volume samples retrieved in May 1986					
a. Core Positions E11-12 and F11-12 (49 g)[c]	1	INEL	TRA-657 a-wing Hot Cell	?	TAN Hot Shop Pool.
b. Core Positions M11-12 and N11-12 (415 g)[c]	2	INEL	TRA-657 a-wing Hot Cell	?	TAN Hot Shop Pool.
c. Core Positions M8-9 and N8-9 (3 g)[c]	3	INEL	TRA-657 a-wing Hot Cell	?	TAN Hot Shop Pool.
d. Core Positions M3-4 and N3-4 (98 g)[c]	4	INEL	TRA-657 a-wing Hot Cell	?	TAN Hot Shop Pool.
e. Core Positions E4-5 and F4-5 (11 g)[c]	5	INEL	TRA-657 a-wing Hot Cell	?	TAN Hot Shop Pool.

Sample Description	Sample Number	Location or Status: Laboratory	Building	Container	Disposition Recommendation
E.3 (continued)					
f. Core Positions B8-9 and C8-9 (61 g)[c]	6	INEL	TRA-657 α-wing Hot Cell	?	TAN Hot Shop Pool.
F. Core Distinct Components:					
1. Upper core region:					
a. 6-in. fuel rod segments from core cavity periphery:					
(1) Segment 1 (Core Position L1)	N2-2	ANL-E			
(2) Segment 2 (Core Position L1):	N2-1				
Upper half	2-b	CSNI-France			
Lower half	2-a	CSNI-KFK			
(3) Segment 3 (Core Position N2)	N2-3	ANL-E			
(4) Segment 4 (Core Position M2):	SR-III				
Upper half	4-b	INEL	TRA Hot Cell 1		TAN Hot Shop Pool.
Lower half	4-a	CSNI-Canada			
(5) Segment 5 (Core Position M2):	SR-I				
Upper half	5-b	INEL	TRA-657		TAN Hot Shop Pool.
Lower half	5-a	CSNI-KFK			
(6) Segment 6 (Core Position M2[a]	SR-II	INEL	TAN Hot Cell (backside)	Double 55 gal drum	TAN Hot Shop Pool.

Sample Description	Sample Number	Location or Status: Laboratory	Building	Container	Disposition Recommendation
F. 1 (continued)					
b. fuel rod upper ends:					
(1) Core Position C7:					
(a) 3-6	N/A	INEL	TRA Hot Cell	Al. Shipping Tube 1	TAN Hot Shop Pool.
(b) 3-14	N/A	INEL	TRA Hot Cell	Al. Shipping Tube 7	TAN Hot Shop Pool.
(c) 3-18	N/A	INEL	TRA Hot Cell	Al. Shipping Tube 8	TAN Hot Shop Pool.
(d) 3-20	N/A	INEL	TRA Hot Cell	Al. Shipping Tube 9	TAN Hot Shop Pool.
(e) 3-28	N/A	INEL	TRA Hot Cell	Al. Shipping Tube 10	TAN Hot Shop Pool.
(f) 3-30:	Remnant	INEL	TRA Hot Cell 1	Al. Shipping Tube 2	
	M-1	INEL	TRA Hot Cell 2	Met mount M-1	Archive to TRA-657
	M-3	INEL	TRA Hot Cell 2	Met mount M-3	TAN Hot Shop Pool.
	SE-2	INEL	TRA-657		Remnants to TAN Hot Shop Pool.
	SE-4:				
	clad	INEL	TRA-657		Remnants to TAN Hot Shop Pool.
	fuel pellet	INEL	TRA-657, PSAN	Drum #6	Remnants to TAN Hot Shop Pool.
	fuel pellet in solution	INEL	TRA-657		TAN Hot Shop Pool.
	SE-22	INEL	--[b]		Remnants to TAN Hot Shop Pool if found.
	SE-23	INEL	--[b]		Remnants to TAN Hot Shop Pool if found.
	V-4A	INEL	TRA Hot Cell 2	Vial V-4A	Remnants to TAN Hot Shop Pool.
(g) 3-35.	3-35b Remnant	INEL	TRA Hot Cell	Al. Shipping Tube 11	TAN Hot Shop Pool.
	3-35a	Lower 6 in. to CSNI-3RC			
(h) 3-42:	M-5	INEL	TRA Hot Cell 2	Met mount M-5	TAN Hot Shop Pool.
	M-7	INEL	TRA Hot Cell 2	Met mount M-7	TAN Hot Shop Pool.
	SE-8	INEL	--[b]		Remnants to Tan Hot Shop Pool if found.
	SE-21	INEL	TRA-657 PSAN	Drum No. 6	Remnants to Tan Hot Shop Pool.
(i) 3-61	3-61A (CSNI)	INEL			
	3-61B (Remnant)	INEL	TRA Hot Cell 1	Can Rad Chem Alpha-Wing	Tan Hot Shop Pool.
	fuel	HEDL			

Sample Description	Sample Number	Location or Status: Laboratory	Building	Container	Disposition Recommendation
F.1.b.(1)(i) (continued)					
	Pellet 1 Fuel Pellet 2	HEDL			
	3-61C (Remnant)	INEL	TRA Hot Cell 1	Al. Shipping Tube 4	Tan Hot Shop Pool.
(j) 3-70:	3-70C (Remnant)	INEL	TRA Hot Cell[d]	Can # 2 CSNI	TAN Hot Shop Pool.
	3-70B 3-70A	INEL Lower 6 in. to CSNI-KFK	TRA Hot Cell 1	Can Rad Chem Alpha Wing	
(k) 3-88:	3-88B 3-88A	INEL Lower 6 in. to CSNI-KFK	TRA Hot Cell	Al. Shipping Tube 12	TAN Hot Shop Pool
(l) 3-89	N/A	INEL	TAN-607 Pool	Fuel Canister D-174	
(m) 3-94:	3-94C (Remnant)	INEL	TRA Hot Cell[d]	Can # 2 CSNI	TAN Hot Shop Pool.
	3-94A (lower 6 in.)	INEL	TRA Hot Cell 1	Can Rad Chem Alpha Wing	
	3-94B	6 in. to CSNI-Canada			
(n) 3-98	N/A	INEL	TRA Hot Cell 1	Al. Shipping Tube 14	TAN Hot Shop Pool.
(o) 3-102	3-102B (Remnant)	INEL	TRA Hot Cell 1	Al. Shipping Tube 15	TAN Hot Shop Pool.
	3-102A (CSNI)				
(2) Core Position H-1:	11-1	INEL	Tan-607 Pool	Fuel Canister D-174	Remnant to TAN Hot Shop Pool.
	11-2	INEL	Tan-607 Pool	Fuel Canister D-174	Remnant to TAN Hot Shop Pool.
	11-3 (Remnant)	INEL	INEL Hot Cell 1	Al. Shipping Tube 31	TAN Hot Shop Pool.

Sample Description	Sample Number	Location or Status: Laboratory	Building	Container	Disposition Recommendation
F.1.b.(2) (continued)					
	11-3A Remnant	CSNI			
	11-3A Fuel Pellet 1	HEDL			
	11-3A Fuel Pellet 2	HEDL			
	11-4	INEL	Tan-607 Pool	Fuel Canister D-174	RMPC
	11-5	INEL	INEL Hot Cell 1	Al. Shipping Tube 32	TAN Hot Shop Pool.
	11-7	INEL	Tan-607 Pool	Fuel Canister D-174	TAN Hot Shop Pool.
	11-9	INEL	Tan-607 Pool	Fuel Canister D-174	TAN Hot Shop Pool.
c. Control rod and/or guide tube upper ends from core position C7:					
(1) 3-1C (Control Rod):	M10-A	INEL	TRA Hot Cell 2	Met mount M-10-A	Retain at TRA-657.
	M10-B	INEL	TRA Hot Cell 2	Met mount M-10-B	Retain at TRA-657.
	SE-9	INEL	TRA-657		RMPC
	SE-11	INEL	TRA-657		RMPC
	V-12	INEL	--b		RMPC if found.
(2) 3-1G (Guide Tube):	SE-17	INEL	TRA-657		RMPC
	SE-18	INEL	TRA-657		RMPC
	SE-19	INEL	TRA-657		RMPC
	SE-20	INEL	TRA-657		RMPC
(3) 3-3C (Control Rod)	3-3A (CSNI) 3-3B (CSNI)	--b Lower 4.5 in. to CSNI-KFA			
(4) 3-3G (Guide Tube):	3-3D (Remnant)	--b			

Sample Description	Sample Number	Location or Status: Laboratory	Building	Container	Disposition Recommendation
F.1.c.(4) (continued)					
	3-3C	INEL	TRA Hot Cell 1	Al. Shipping Tube 19	RWMC
(5) 3-7C (Control Rod):	3-7CB	INEL	TRA Hot Cell	Al. Shipping Tube 20	RWMC
	(Remnant) 3-7CA	Lower 6 in. to CSNI-KFK			
(6) 3-7G (Guide Tube)	N/A	INEL	TRA Hot Cell 1	Al. Shipping Tube 21	RWMC
(7) 3-9C/G (Control Rod and Guide Tube):	3-9B	--[b]			
	3-9A	Lower 6 in. to CSNI-KFK			
(8) 3-13C/G (Control Rod and Guide Tube):	3-13B (Remnant)	INEL	TRA Hot Cell	Al. Shipping Tube 24	RWMC
	3-13A	Lower 6 in. to CSNI-KFK			
(9) 3-14C/G (Control Rod and Guide Tube):	M-13	INEL	TRA Hot Cell 2	Met mount M-13	Retain at TRA-657.
	M-15	INEL	TRA Hot Cell 2	Met mount M-15	Retain at TRA-657.
	SE-14	INEL	TRA-657		RWMC
	SE-16	INEL	TRA-657		RWMC
(10) 3-16C/G (Control Rod and Guide Tube)	3-16C (Remnant)	--[b]			
	3-16B (6 in.)	INEL	TRA Hot Cell 1	Al. Shipping Tube 25	TAN Hot Shop Pool.
	3-16C (6 in.)	--[b]			
d. Peripheral fuel assembly upper end fittings:					
(1) Core Position E2	D-153-5	INEL	TAN-607 Pool	Fuel Canister D-141	N/A
(2) Core Position H1	D-141-11	INEL	TAN-607 Pool	Fuel Canister D-141	N/A
(3) Core Position K15	D-141-7	INEL	TAN-607	Drum 1A	RWMC
(4) Core Position R7	D-153-7	INEL	TAN-607 Pool	Fuel Canister D-141	N/A
e. Control rod assembly upper end fittings (spiders):					

Sample Description	Sample Number	Location or Status: Laboratory	Building	Container	Disposition Recommendation
f. (continued)					
(1) Core Position B8	D-153-9	INEL	TAN-607	Drum 4B	RWMC
(2) Core Position B10	D-153-13	INEL	TAN-607	Drum 3A	RWMC
(3) Core Position C7	D-141-3	INEL	TAN-607 Pool	Fuel Canister D-141	N/A
(4) Core Position C11	D-141-2	INEL	TAN-607	Drum 2B	RWMC
(5) Core Position D4	D-153-10	INEL	TAN-607 Pool	Fuel Canister D-141	N/A
(6) Core Position D8	D-153-3	INEL	TAN-607	Drum 4A	RWMC
(7) Core Position E13	D-141-1	INEL	TAN-607 Pool	Fuel Canister D-141	N/A
(8) Core Position G3	D-153-4	INEL	TAN-607	Drum 4B	RWMC
(9) Core Position H8	D-141-10	INEL	TAN-607	Drum 1A	RWMC
(10) Core Position L8	D-141-9	INEL	TAN-607 Pool	Fuel Canister D-141	N/A
(11) Core Position M9	D-141-8	INEL	TAN-607	Drum 3A	RWMC
(12) Core Position P6	D-153-8	INEL	TAN-607	Drum 4A	RWMC
f. Control rod fuel assembly upper end fittings:					
(1) Core Position B8	D-153-9	INEL	TAN-607	Drum 4B	RWMC
(2) Core Position B10	D-153-13	INEL	TAN-607	Drum 3A	RWMC
(3) Core Position C7	D-141-3	INEL	TAN-607 Pool	Fuel Canister D-141	N/A
(4) Core Position D4	D-153-10	INEL	TAN-607 Pool	Fuel Canister D-141	N/A
(5) Core Position D8	D-153-3	INEL	TAN-607	Drum 4A	RWMC
(6) Core Position E13	D-141-1	INEL	TAN-607 Pool	Fuel Canister D-141	N/A
(7) Core Position F14	D-153-11	INEL	TAN-607 Pool	Fuel Canister D-141	N/A
(8) Core Position G3	D-153-4	INEL	TAN-607	Drum 4B	RWMC

Sample Description	Sample Number	Location or Status: Laboratory	Building	Container	Disposition Recommendation
F.1.f. (continued)					
(9) Core Position H8	D-141-10	INEL	TAN-607	Drum 1A	Retain at TRA-657
(10) Core Position L8	D-141-9	INEL	TAN-607 Pool	Fuel Canister D-141	N/A
(11) Core Position M9	D-141-10	INEL	TAN-607	Drum 3A	RWMC
(12) Core Position O6 (APSR)	D-153-12	INEL	TAN-607 Pool	Fuel Canister D-141	N/A
(13) Core Position P6	D-153-8	INEL	TAN-607	Drum 4A	RWMC
g. Burnable poison rod assembly retainers:					
(1) Core Position G14	D-153-2	INEL	TAN-607 Pool	Fuel Canister D-141	N/A
(2) Core Position K4	D-153-1	INEL	TAN-607	Drum 1A	RWMC
(3) Core Position L3	D-141-6	INEL	TAN-607	Drum 2A	RWMC
h. Burnable poison rod assembly upper end fitting from core position N9	D-141-5	INEL	TAN-607	Drum 1A	Retain at TRA-657
i. Burnable poison rod fuel assembly upper end fittings:					
(1) Core Position N9	D-141-4	INEL	TAN-607	Drum 2A	RWMC
(2) Core Position O10	D-153-6	INEL	TAN-607	Drum 3B	Retain at TRA-657
j. Incore instrument string segment (4 ft long) from core position C13 (probable)	N/A	INEL	TRA-657	Unshielded metal box	RWMC
2. Lower core region:					
a. Fuel rod lower ends:					
(1) Core Position D4:	D4-R9-2 Remnants	INEL	TAN Hot Shop Pool.	Fuel Canister D-174	N/A
	D4-R9-2B	INEL	TRA Hot Cell 2	1-1/4 met mount	Retain at TRA-657.
	D4-R9-2D	INEL	TAN Hot Shop	Fuel Canister D-174	N/A

Sample Description	Sample Number	Location or Status: Laboratory	Building	Container	Disposition Recommendation
1.2.a (1) (continued)					
			Pool.		
	D4-R9-2E	INEL	TRA Hot Cell 1	Can. Rad Chem 1	TAN Hot Shop Pool.
	D4-R9-4 Remnants	INEL	TAN Hot Shop Pool.	Fuel Canister D-174	N/A
	D4-R9-4G	INEL	TRA Hot Cell 2	1-1/4 met mount	Retain at TRA-657.
	D4-R9-4I	INEL	TAN Hot Shop Pool.	Fuel Canister D-174	N/A
	D4-R9-4J	--[b]			
	D4-R9-6 Remnants	INEL	TAN Hot Shop Pool.	Fuel Canister D-174	N/A
	D4-R9-6L	INEL	TRA Hot Cell 2	1-1/4 met mount	Retain at TRA-657.
	D4-R9-6N	INEL	TAN Hot Shop Pool.	Fuel Canister D-174	N/A
	D4-R9-6Q	--[b]			TAN Hot Shop Pool.
	D4-R9-8 Remnants	INEL	TAN Hot Shop Pool.	Fuel Canister D-174	N/A
	D4-R9-8Q	INEL	TRA Hot Cell 2	1-1/4 met mount	Retain at TRA-657.
	D4-R9-8R	INEL	TAN Hot Shop Pool.	Fuel Canister D-174	N/A
	D4-R9-8S	INEL	--[b]		
	D4-R9-8T	INEL	TRA Hot Cell 1	Can. Rad Chem 1	TAN Hot Shop Pool.
	D4-R12-2	INEL	TRA Hot Cell 1	Vial D4-R12	TAN Hot Shop Pool.
	D4-R12-4	INEL	TRA Hot Cell 1	Vial D4-R12	TAN Hot Shop Pool.
	D4-R12-6	INEL	TRA Hot Cell 1	Vial D4-R12	TAN Hot Shop Pool.
	D4-R12-8	INEL	TRA Hot Cell 1	Vial D4-R12	TAN Hot Shop Pool.
(2) Core Position D8: (with gadolinia)	D8-R4-2	INEL	TRA Hot Cell 1	Vial D8-R4	TAN Hot Shop Pool.
	D8-R4-4	INEL	TRA Hot Cell 1	Vial D8-R4	TAN Hot Shop Pool.
	D8-R4-6	INEL	TRA Hot Cell 1	Vial D8-R4	TAN Hot Shop Pool.
	D8-R4 Fuel Pellet	INEL	MTR Lab-120	Poly vial	Destroy after analysis.
	D8-R6-2	INEL	TRA Hot Cell 1	Vial D8-R6	TAN Hot Shop Pool.
	D8-R6-4	INEL	TRA Hot Cell 1	Vial D8-R6	TAN Hot Shop Pool.
	D8-R6-6	INEL	TRA Hot Cell 1	Vial D8-R6	TAN Hot Shop Pool.
(3) Core Position G8:	G8-R6-2	INEL	TRA Hot Cell 1	Vial G8-R-6, G8-R-11	TAN Hot Shop Pool.
	G8-R9-2 Remnants	INEL	TAN Hot Shop Pool.	Fuel Canister D-174	N/A

Sample Description	Sample Number	Location or Status: Laboratory	Building	Container	Disposition Recommendation
F.2.a.(3) (continued)					
	G8-R9-2B	INEL	TRA Hot Cell 1 or 2	Vial G8-R9 or 1-1/4 met mount	Retain met mount at TRA-657.
	G8-R9-2D	INEL	TAN Hot Shop Pool.	Fuel Canister D-174	N/A
	G8-R9-2E	INEL	TRA Hot Cell 1	Rad Chem 1	TAN Hot Shop Pool.
	G8-R9-4 Remnants	INEL	TAN Hot Shop Pool.	Fuel Canister D-174	N/A
	G8-R9-4G	INEL	TRA Hot Cell 1 or 2	1-1/4 met mount	Retain met mount at TRA-657.
	G8-R9-4I	INEL	TAN Hot Shop Pool.	Fuel Canister D-174	N/A
	G8-R9-4J	INEL	TRA Hot Cell 1	Canister 1	TAN Hot Shop Pool.
	G8-R9-4Q	INEL	TRA Hot Cell 1	Vial G8-R9 or 1-1/4 met mount	Retain met mount at TRA-657.
	G8-R9-6 Remnants	INEL	TAN Hot Shop Pool.	Fuel Canister D-174	N/A
	G8-R9-6L	INEL	TRA Hot Cell 1 or 2	CSNI-2 or 1-1/4 met mount	Retain met mount at TRA-657.
	G8-R9-6N	INEL	TAN Hot Shop Pool.	Fuel Canister D-174	N/A
	G8-R9-6O	INEL	TRA Hot Cell 1	Rad Chem 1	TAN Hot Shop Pool.
(4) Core Position G12:	G12-R2-2	INEL	TRA Hot Cell 1	Vial G12-R2	TAN Hot Shop Pool.
	G12-R2-4	INEL	TRA Hot Cell 1	Vial G12-R2	TAN Hot Shop Pool.
	G12-R2-6	INEL	TRA Hot Cell 1	Vial G12-R2	TAN Hot Shop Pool.
	G12-R2-8	INEL	TRA Hot Cell 1	Vial G12-R2	TAN Hot Shop Pool.
	G12-R4-2	ANL-E			
	G12-R4-4	ANL-E			
	G12-R4-6	ANL-E			
	G12-R8-2	INEL	TRA Hot Cell 1	Vial G12-R8	TAN Hot Shop Pool.
	G12-R8-4	INEL	TRA Hot Cell 1	Vial G12-R8	TAN Hot Shop Pool.
	G12-R8-6	INEL	TRA Hot Cell 1	Vial G12-R8	TAN Hot Shop Pool.
	G12-R8-8	CSNI-UK			
(5) Core Position K6:	K6-R1-2	--[b]			
(6) Core Position K9:	K9-R5-2 Remnants	INEL	TAN Hot Shop Pool.	Fuel Canister D-174	N/A
	K9-R5-2B	INEL	TRA Hot Cell 2	1-1/4 met mount	Retain at TRA-657.

Sample Description	Sample Number	Location or Status: Laboratory	Building	Container	Disposition Recommendation
F.2 a 6 (continued)					
	K9-R5-2D	INEL	TAN Hot Shop Pool.	Fuel Canister D-174	N/A
	K9-R5-2E	INEL	TRA Hot Cell 1	Can. Rad Chem 1	TAN Hot Shop Pool.
	K9-R5-4 Remnants	INEL	TAN Hot Shop Pool.	Fuel Canister D-174	N/A
	K9-R5-4G	INEL	TRA Hot Cell 2	1-1/4 met mount	Retain at TRA-657.
	K9-R5-4I	INEL	TAN Hot Shop Pool.	Fuel Canister D-174	N/A
	K9-R5-4J	INEL	TRA Hot Cell 1	Can. Rad Chem 1	TAN Hot Shop Pool.
	K9-R5-5 Remnants	INEL	TAN Hot Shop Pool.	Fuel Canister D-174	N/A
	K9-R5-5L	INEL	TRA Hot Cell 2	1-1/4 met mount	Retain at TRA-657.
	K9-R5-5N	INEL	TAN Hot Shop Pool.	Fuel Canister D-174	N/A
	K9-R5-5O	INEL	TRA Hot Cell 1	Can. Rad Chem 1	TAN Hot Shop Pool.
	K9-R9-2	ANL-E			
	K9-R9-4	ANL-E			
	K9-R9-5	ANL-E			
	K9-R14-2	INEL	TRA Hot Cell 1	Vial K9-R14	TAN Hot Shop Pool.
	K9-R14-4	CSMI-UK			
	K9-R14-5	CSMI-UK			
(7) Core Position N5:	N5-R2-2B	--[b]			
	N5-R2-2C	--[b]			
	N5-R2-2D	--[b]	TAN Hot Shop Pool.	Fuel Canister D-174	N/A
	N5-R2-2E	INEL	TRA Hot Cell 1	Rad Chem 1	TAN Hot Shop Pool.
	N5-R2-4G	--[b]			
	N5-R2-4H	--[b]			
	N5-R2-4I	INEL	TAN Hot Shop Pool.	Fuel Canister D-174	N/A
	N5-R2-4J	INEL	TRA Hot Cell 1	Rad Chem 1	TAN Hot Shop Pool.
	N5-R2-6L	--[b]			
	N5-R2-6M	--[b]			
	N5-R2-6N	INEL	TAN-607 Pool	Fuel Canister D-174	N/A
	N5-R2-6O	INEL	TRA Hot Cell 1	Rad Chem 1	TAN Hot Shop Pool.
	N5-R2-8Q	--[b]			
	N5-R2-8R	--[b]			

Sample Description	Sample Number	Location or Status: Laboratory	Building	Container	Disposition Recommendation
F.2.a.(7) (continued)					
	N5-R2-8S	INEL	TAN-607 Pool	Fuel Canister D-174	N/A
	N5-R2-8T	--[b]			
	N5-R5-2	INEL	TRA Hot Cell 1	Vial N5-R5	TAN Hot Shop Pool.
	N5-R5-4	INEL	TRA Hot Cell 1	Vial N5-R5	TAN Hot Shop Pool.
	N5-R5-6	INEL	TRA Hot Cell 1	Vial N5-R5	TAN Hot Shop Pool.
	N5-R5-8	INEL	TRA Hot Cell 1	Vial N5-R5	TAN Hot Shop Pool.
	N5-R5-5	INEL	TRA Hot Cell 1	Vial N5-R5	TAN Hot Shop Pool.
	Remnant				
(8) Core Position N12:	N12-R4-2	INEL	TRA Hot Cell 1	Vial N12-R4	TAN Hot Shop Pool.
	N12-R4-4	INEL	TRA Hot Cell 1	Vial N12-R4	TAN Hot Shop Pool.
	N12-R4-6	INEL	TRA Hot Cell 1	Vial N12-R4	TAN Hot Shop Pool.
	N12-R9-2	INEL	TRA Hot Cell 1	Vial N12-R9	TAN Hot Shop Pool.
	N12-R9-4	INEL	TRA Hot Cell 1	Vial N12-R9	TAN Hot Shop Pool.
	N12-R9-6	INEL	TRA Hot Cell 1	Vial N12-R9	TAN Hot Shop Pool.
	N12-R9-8	INEL	TRA Hot Cell 1	Vial N12-R9	TAN Hot Shop Pool.
	N12-R11-2	INEL	TRA Hot Cell 1	Vial N12-R11	TAN Hot Shop Pool.
	N12-R11-4	INEL	TRA Hot Cell 1	Vial N12-R11	TAN Hot Shop Pool.
	N12-R11-6	INEL	TRA Hot Cell 1	Bucket G-12	TAN Hot Shop Pool.
	N12-R11-8	INEL	TRA Hot Cell 1	Bucket G-12	TAN Hot Shop Pool.
(9) Core Position O7:	O7-R3-2	INEL	TRA Hot Cell 1	Vial O7-R3	TAN Hot Shop Pool.
	O7-R3-4	INEL	TRA Hot Cell 1	Vial O7-R3	TAN Hot Shop Pool.
	O7-R3-6	INEL	TRA Hot Cell 1	Vial O7-R3	TAN Hot Shop Pool.
	O7-R5-2	INEL	TRA Hot Cell 1	Vial O7-R5	TAN Hot Shop Pool.
	O7-R5-4	INEL	TRA Hot Cell 1	Vial O7-R5	TAN Hot Shop Pool.
	O7-R5-6	INEL	TRA Hot Cell 1	Vial O7-R5	TAN Hot Shop Pool.
(10) Core Position O9:	O9-R6-2	INEL	TRA Hot Cell 1	Vial O9-R6	TAN Hot Shop Pool.
	O9-R6-3	INEL	TRA Hot Cell 1	Vial O9-R6	TAN Hot Shop Pool.
	O9-R6-4	INEL	TRA Hot Cell 1	Vial O9-R6	TAN Hot Shop Pool.
	O9-R6-6	INEL	TRA Hot Cell 1	Vial O9-R6	TAN Hot Shop Pool.
	O9-R11-2	INEL	TRA Hot Cell 1	Vial O9-R11	TAN Hot Shop Pool.
	O9-R11-3	INEL	TRA Hot Cell 1	Vial O9-R11	TAN Hot Shop Pool.
	O9-R11-4	INEL	TRA Hot Cell 1	Vial O9-R11	TAN Hot Shop Pool.
	O9-R11-6	INEL	TAN Hot Cell 1	Vial O9-R11	TAN Hot Shop Pool.
b. Control rod and/or guide tube lower ends:					

Sample Description	Sample Number	Location or Status: Laboratory	Building	Container	Disposition Recommendation
F.2 b (continued)					
(1) Core Position D4	D4-R8-2 Remnants	INEL	TAN Hot Shop Pool.	Fuel Canister D-174	N/A
	D4-R8-2A	INEL	TRA Hot Cell 1		TAN Hot Shop Pool
	D4-R8-2B	INEL	TRA Hot Cell 2	1-1/4 met mount	Retain at TRA-657.
	D4-R8-2C	INEL	TRA Hot Cell 1		TAN Hot Shop Pool.
	D4-R8-2D	INEL	TAN Hot Shop Pool.	Fuel Canister D-174	N/A
	D4-R8-2E	INEL	TRA Hot Cell 1	Rad Chem 2	TAN Hot Shop Pool.
	D4-R8 4 Remnants	INEL	TAN Hot Shop Pool.	Fuel Canister D-174	N/A
	D4-R8-4F	INEL	TRA Hot Cell 1		TAN Hot Shop Pool.
	D4-R8-4G	INEL	TRA Hot Cell 2	1-1/4 met mount	Retain at TRA-657.
	D4-R8-4H	INEL	TRA Hot Cell 1		TAN Hot Shop Pool.
	D4-R8-4I	INEL	TAN Hot Shop Pool.	Fuel Canister D-174	N/A
	D4-R8 4J	INEL	TRA Hot Cell 1	Rad Chem 2	TAN Hot Shop Pool.
	D4-R8-6 Remnants	INEL	TAN Hot Shop Pool.	Fuel Canister D-174	N/A
	D4-R8-6K	INEL	TRA Hot Cell 1		TAN Hot Shop Pool.
	D4-R8-6L	INEL	TRA Hot Cell 2	1-1/4 met mount	Retain at TRA-657.
	D4-R8-6M	INEL	TRA Hot Cell 1		TAN Hot Shop Pool.
	D4-R8-6N	INEL	TAN Hot Shop Pool.	Fuel Canister D-174	N/A
	D4-R8-6O	INEL	TRA Hot Cell 1	Rad Chem 2	TAN Hot Shop Pool.
	D4-R8-8 Remnants	INEL	TAN Hot Shop Pool.	Fuel Canister D-174	N/A
	D4-R8-8P	INEL	TRA Hot Cell 1		TAN Hot Shop Pool.
	D4-R8-8Q	INEL	TRA Hot Cell		TAN Hot Shop Pool.
	D4-R8-8R	INEL	TRA Hot Cell 1		TAN Hot Shop Pool.
	D4-R8-8S	INEL	TAN Hot Shop Pool.	Fuel Canister D-174	N/A
	D4-R8-8T	INEL	TRA Hot Cell 1	Rad Chem 2	
(2) Core Position D8:	D8-R7-2	INEL	TRA Hot Cell 1	Vial D8-R7	Retain at TRA-657.
	D8-R7-4	INEL	TRA Hot Cell 1	Vial D8-R7	Retain at TRA-657.
	D8-R7-6	INEL			Retain at TRA-657.

Sample Description	Sample Number	Location or Status: Laboratory	Building	Container	Disposition Recommendation
F.2.b (continued)					
(3) Core Position K9:	K9-R13-2 Remnants	INEL	TAN Hot Shop Pool.	Fuel Canister D-174	N/A
	K9-R13-2A	INEL	--[b]		TAN Hot Shop Pool.
	K9-R13-2B	INEL	TRA Hot Cell 2	1-1/4 met mount	Retain at TRA-657.
	K9-R13-2C	INEL	TRA Hot Cell 1	Can K9	TAN Hot Shop Pool.
	K9-R13-2D	INEL	TAN Hot Shop Pool.	Fuel Canister D-174	N/A
	K9-R13-2E	INEL	TRA Hot Cell 1	Rad Chem 2	TAN Hot Shop Pool.
	K9-R13-4 Remnants	INEL	TAN Hot Shop Pool.	Fuel Canister D-174	N/A
	K9-R13-4F	INEL	TRA Hot Cell 1	Can K9	TAN Hot Shop Pool.
	K9-R13-4G	INEL	TRA Hot Cell 2	1-1/4 met mount	Retain at TRA-657.
	K9-R13-4H	INEL	TRA Hot Cell 1	Can K9	TAN Hot Shop Pool.
	K9-R13-4I	INEL	TAN Hot Shop Pool.	Fuel Canister D-174	N/A
	K9-R13-4J	INEL	TRA Hot Cell 1	Rad Chem 2	TAN Hot Shop Pool.
	K9-R13-6 Remnants	INEL	TAN Hot Shop Pool.	Fuel Canister D-174	N/A
	K9-R13-6K	INEL	TRA Hot Cell 1	Can K9	TAN Hot Shop Pool.
	K9-R13-6L	INEL	TRA Hot Cell 2	1-1/4 met mount	Retain at TRA-657.
	K9-R13-6M	INEL	TRA Hot Cell 1	Can K9	TAN Hot Shop Pool.
	K9-R13-6N	INEL	TAN Hot Shop Pool.	Fuel Canister D-174	N/A
	K9-R13-6O	INEL	TRA Hot Cell 1	Rad Chem 2	TAN Hot Shop Pool.
(4) Core Position N12:	N12-R7-2	INEL	TRA Hot Cell 1	Vial N-12	TAN Hot Shop Pool.
	N12-R7-4	INEL	TRA Hot Cell 1	Vial N-12	TAN Hot Shop Pool.
	N12-R7-6	INEL	TRA Hot Cell 1	Vial N-12	TAN Hot Shop Pool.
	N12-R7-8	--[b]			
	N12-R7-10 Remnants	INEL	TAN Hot Shop Pool.	Fuel Canister D-174	N/A
	N12-R7-10V	--[b]			
	N12-R7-10W	--[b]			
	N12-R7-10X	--[b]			
	N12-R7-10Y	INEL	TAN Hot Cell 1 or 2.	Vial N12-R7 or 1-1/4 met mount	Retain met mount at TRA-657.
	N12-R13-2	ANL-E			
	N12-R13-4	ANL-E			
	N12-R13-6	ANL-E			

Sample Description	Sample Number	Location or Status: Laboratory	Building	Container	Disposition Recommendation
F 2.b (continued)					
(5) Core Position D7:	D7-R7-2	INEL	TRA Hot Cell 1	Vial D7-R7	Retain at TRA-657.
	D7-R7-4	INEL	TRA Hot Cell 1	Vial D7-R7	Retain at TRA-657
	D7-R7-6	INEL	TRA Hot Cell 1	Vial D7-R7	Retain at TRA-657
	D7-R7-60 Remnants	INEL	TAN Hot Shop Pool.	Fuel canister D-174	N/A
(6) Core Position D9:	D9-R7-2	INEL	TRA Hot Cell 1	Vial D9-R7	Retain at TRA-657.
	D9-R7-4	INEL	TRA Hot Cell 1	Vial D9-R7	Retain at TRA-657.
	D9-R7-6	INEL	TRA Hot Cell 1	Vial D9-R7	Retain at TRA-657.
	D9-R8-2	INEL	TRA Hot Cell 1	Vial D9-R8	TAN Hot Shop Pool.
	D9-R8-4	INEL	TRA Hot Cell 1	Vial D9-R8	TAN Hot Shop Pool.
	D9-R8-6	INEL	TRA Hot Cell 1	Vial D9-R8	TAN Hot Shop Pool.
c. Burnable poison rod and/or guide tube lower ends:					
(1) Core Position G8:	G8-R11-2	--[b]	TRA 657 (?)		Analyze poison material.
(2) Core Position G12:	G12-R13-2	INEL	TRA Hot Cell 1	Vial G-12-R13	Reconfirm
	G12-R13-4	CSNI-KFK			
	G12-R16-2	CSNI-KFA			
	G12-R16-4	CSNI-KFK			
(3) Core position N5:	N5-R7-2	ANL-E			
	N5-R7-4	ANL-E			
	N5-R7-6	ANL-E			
	N5-R7-8	ANL-E			
d. Fuel assembly instrument tube lower ends:					
(1) Core Position D4.	D4-R1-2	INEL	TRA Hot Cell 1	Vial D4-R1	TAN Hot Shop Pool or RMPC.
	D4-R1-4	INEL	TRA Hot Cell 1	Vial D4-R1	TAN Hot Shop Pool or RMPC.
	D4-R1-6	INEL	TRA Hot Cell 1	Vial D4-R1	TAN Hot Shop Pool or RMPC.
(2) Core Position D8:	D8-R8-2	INEL	TRA Hot Cell 1	Vial D8-R8	TAN Hot Shop Pool or RMPC.
	D8-R8-4	INEL	TRA Hot Cell 1	Vial D8-R8	TAN Hot Shop Pool or RMPC.
	D8-R8-6	INEL	TRA Hot Cell 1	Vial D8-R8	TAN Hot Shop Pool or RMPC.
(3) Core Position G8:	G8-R3-2 Poison	INEL	NTR lab-128	Poly vial/plastic bag	Rad chem analysis
	G8-R3-2 Remnants	INEL	TAN Hot Shop Pool.	Fuel Canister D-174	N/A
	G8-R3-28	INEL	TRA Hot Cell 2	1-1/4 met mount	Retain at TRA-657.
	G8-R3-28	INEL	TAN Hot Shop Pool.	Fuel Canister D-174	N/A
	G8-R3-2E	INEL	TRA Hot Cell 1	Rad chem 2	Retain at TRA-657

Sample Description	Sample Number	Location or Status: Laboratory	Building	Container	Disposition Recommendation
F.2.d (3) (continued)					
	G8-R3-4 Remnants	INEL	TAN Hot Shop Pool.	Fuel Canister D-174	N/A
	G8-R3-4H	INEL	TRA Hot Cell 2	1-1/4 met mount	Retain at TRA-657.
	G8-R3-4J	INEL	TAN Hot Shop Pool.	Fuel Canister D-174	N/A
	G8-R3-4K	INEL	TRA Hot Cell 1	Rad chem 2	TAN Hot Shop Pool.
	G8-R3-6 Remnants	INEL	TAN Hot Shop Pool.	Fuel Canister D-174	N/A
	G8-R3-6M	INEL	TRA Hot Cell 2	1-1/4 met mount	Retain at TRA-657.
	G8-R3-6O	INEL	TAN Hot Shop Pool.	Fuel Canister D-174	N/A
	G8-R3-6P	INEL	TRA Hot Cell 1	Rad chem 2	Retain at TRA-657.
(4) Core Position G12:	G12-R12-2	INEL	TRA Hot Cell 1	Vial G12-R12	Retain at TRA-657.
	G12-R12-4	INEL	TRA Hot Cell 1	Vial G12-R12	Retain at TRA-657.
	G12-R12-6	INEL	TRA Hot Cell 1	Vial G12-R12	Retain at TRA-657.
	G12-R12-8	INEL	TAN Hot Cell 1	Vial G12-R12	Retain at TRA-657.
(5) Core Position K9:	K9-R4-2	INEL	TRA Hot Cell 1	Vial K9-R4	RWMC or TAN Hot Shop Pool.
	K9-R4-4	INEL	TRA Hot Cell 1	Vial K9-R4	RWMC or TAN Hot Shop Pool.
(6) Core Position N5:	N5-R15-2 Remnants	INEL	TAN Hot Shop Pool.	Fuel Canister D-174	N/A
	N5-R15-2B	INEL	TRA Hot Cell 2	1-1/4 met mount	Retain at TRA-657.
	N5-R15-2D	INEL	TAN Hot Shop Pool.	Fuel Canister D-174	N/A
	N5-R15-2E	INEL	TRA Hot Cell 1	Vial N5-R15	RWMC or TAN Hot Shop Pool.
(7) Core Position O7:	O7-R4-2	INEL	TAN Hot Shop Pool.	Fuel Canister D-174	N/A
	O7-R4-4	INEL	TAN Hot Shop Pool.	Fuel Canister D-174	N/A
	O7-R4-6	INEL	TAN Hot Shop Pool.	Fuel Canister D-174	N/A
e. Lower end fitting tie plate center region (2.4 in. dia.) from core position D4	N/A	INEL	TAN-607 Pool	Fuel Canister D-???	N/A

Sample Description	Sample Number	Location or Status: Laboratory	Building	Container	Disposition Recommendation
6. Fused-Together Core Materials:					
1. Core bore cores					
a. Core Position D8:	D8-P1-A	CSNI-KFK			
	D8-P1-B	ANL-E			
	D8-P1-C	INEL	TRA Hot Cell 1	Can - Rad chem alpha wing	TAN Hot Shop Pool.
	D8-P1-D	INEL	TRA Hot Cell 2	5" ring	Retain at TRA-657.
	D8-P1-E	CSNI-France			
	D8-P1-F	CSNI-Canada			
	D8-P2-A1	INEL	TRA Hot Cell 1	Can Rad Chem Alpha Wing or Can TMI-2 Core Bore D8-P2	TAN Hot Shop Pool.
	D8-P2-A2	INEL	TRA Hot Cell 1	5" ring or Can TMI-2 Core Bore D8-P2	Retain at TRA-657.
	D8-P2-A3	INEL	TRA Hot Cell	--[b]	
	D8-P2-B	CSNI-JRC			
	D8-P2-C	INEL	TRA Hot Cell 1	Can TMI-2 Core Bore D8-P2	TAN Hot Shop Pool.
	D8-P2-D	INEL	TRA Hot Cell 1	Can TMI-2 Core Bore D8-P2	TAN Hot Shop Pool.
	D8-P2-E	INEL	TRA Hot Cell 1	Can TMI-2 Core Bore D8-P2	TAN Hot Shop Pool.
	D8-P3-A1	CSNI-JRC			
	D8-P3-A2	INEL	--[b]		TAN Hot Shop Pool if found.
	D8-P3-A3	INEL	TRA Hot Cell 1	Bucket CSNI-2	TAN Hot Shop Pool.
	D8-P3-A4	INEL	TRA Hot Cell 1	Bucket CSNI-2	TAN Hot Shop Pool.
	D8-P3-A5	INEL	TRA Hot Cell 1	Bucket CSNI-2	TAN Hot Shop Pool.
	D8-P3-B	CSNI-UK			
	D8-P3-C	CSNI-Sweden			
	D8-P3-D1	INEL	TRA Hot Cell 1	Can Rad Chem Alpha Wing	TAN Hot Shop Pool.
	D8-P3-D2	INEL	TRA Hot Cell 2	5" ring	Retain at TRA-657.
	D8-P3-D2A Microcore	INEL	TRA Hot Cell 2	SEM mount	Retain at TRA-657.
	D8-P3-D3	INEL	TRA Hot Cell 1	Bucket TMI-2 Core Bore G8-P11	TAN Hot Shop Pool.
	D8-P3-D3A	INEL	TRA Hot Cell 1	???	TAN Hot Shop Pool.
	D8-P3-D4	INEL	TRA Hot Cell		
	D8-P3-E	INEL	TRA Hot Cell 1	Can TMI-2 Core Bore D8-P3	TAN Hot Shop Pool.
b. Core Position G8:	G8-P11-A	INEL	TRA Hot Cell 1	Canister G8-P11	TAN Hot Shop Pool.
	G8-P11-B	INEL	TRA Hot Cell 2	Rad Chem Alpha Wing or Rad Chem 1	TAN Hot Shop Pool.

Sample Description	Weight (g)	Density (g/cc)	Sample Number	Location or Status: Laboratory	Building	Container	Disposition Recommendation
G.1.b. (continued)							
			G8-P11-C	INEL	TRA Hot Cell 1	5" ring	Retain at TRA-657.
			G8-P11-C1	INEL	TRA Hot Cell 2	Unmounted microcore	Retain at TRA-657.
			G8-P11-C2	INEL	TRA Hot Cell 2	SEM sample	Retain at TRA-657.
			G8-P11-C3	INEL	TRA Hot Cell 2	SEM sample	Retain at TRA-657.
			G8-P11-D	INEL	TRA Hot Cell	Canister G8-P11	TAN Hot Shop Pool.
			G8-P11-E	INEL	TRA Hot Cell 1	Can Rad Chem Alpha Wing	TAN Hot Shop Pool.
			G8-P11-F	INEL	TRA Hot Cell 2	5" ring	Retain at TRA-657.
			G8-P11-G	INEL	TRA Hot Cell Canister G8-P11	Bucket N12-N5-D4 or	TAN Hot Shop Pool.
			G8-P11-H	CSNI- Switzerland			
			G8-P11-I	INEL	TRA Hot Cell 2	5" ring	Retain at TRA-657.
			G8-P11-J	INEL	TRA Hot Cell	Rad Chem 1	TAN Hot Shop Pool.
			G8-P11-K	INEL	TRA Hot Cell	Canister G8-P11	TAN Hot Shop Pool.
c. Core Position G12:			G12-P1-A	ANL-E			
			G12-P1-B	CSNI-KFK			
			G12-P1-C1	CSNI-UK			
			G12-P1-C2	CSNI-Sweden			
			G12-P1-D1	CSNI-France			
			G12-P1-D2	INEL	TRA Hot Cell 1	Can Rad Chem Alpha Wing	TAN Hot Shop Pool.
			G12-P1-D3	INEL	TRA Hot Cell 1	5" ring	Retain at TRA-657.
			G12-P1-D3-A	INEL	TRA Hot Cell 2	SEM mount	Retain at TRA-657.
			G12-P1-D3-B	INEL	TRA Hot Cell 2	SEM mount	Retain at TRA-657.
			G12-P1-D4	INEL	TRA Hot Cell 1	Bucket N12-N5-D4	TAN Hot Shop Pool.
			G12-P1-D5	CSNI-Canada			
			G12-P1-E	INEL	TRA Hot Cell	Canister 1	TAN Hot Shop Pool.
d. Core Position K9:			K9-P1-A	--[b]			
			K9-P1-B	CSNI-UK			
			K9-P1-C	1/2" INEL Wing	TRA Hot Cell 1	Bucket K9 or Rad Chem Alpha	TAN Hot Shop Pool.
			K9-P1-D	INEL	TRA Hot Cell 1	Rad Chem 2 or 5" ring	Retain ring at TRA-657.
			K9-P1-D1	INEL	TRA Hot Cell 2	SEM Sample	Retain at TRA-657.
			K9-P1-D2	INEL	TRA Hot Cell 2	SEM Sample	Retain at TRA-657.
			K9-P1-D3	INEL	TRA Hot Cell 2	SEM Sample	Retain at TRA-657.
			K9-P1-D4	INEL	TRA Hot Cell 2	SEM Sample	Retain at TRA-657.
			K9-P1-D5	INEL	TRA Hot Cell 2	Unmounted microcore	Retain at TRA-657.

Sample Description	Weight (g)	Density (g/cc)	Sample Number	Location or Status: Laboratory	Building	Container	Disposition Recommendation
6.1.d. (continued)							
			K9-P1-E ANL-E K9-P1-F CSNI-KFK K9-P1-G INEL K9-P1-H CSNI-Canada	TRA Hot Cell 1		Rad Chem 2 or 5" ring	Retain ring at TRA-657.
			K9-P2-A CSNI-KFK K9-P2-B CSNI-UK				
			K9-P2-C1	INEL	TRA Hot Cell 1	Vial K9-P2	TAN Hot Shop Pool.
			K9-P2-C2	INEL	TRA Hot Cell 1	Can Rad Chem Alpha Wing	TAN Hot Shop Pool.
			K9-P2-D INEL	TRA Hot Cell 1		5" ring	Retain at TRA-657
			K9-P2-D1 microcore	INEL	TRA Hot Cell	SEM mount	Retain at TRA-657.
			K9-P2-D2 microcore	INEL	TRA Hot Cell	SEM mount	Retain at TRA-657.
			K9-P2-D3 microcore	INEL	TRA Hot Cell	SEM mount	Retain at TRA-657.
			K9-P2-E ANL-E K9-P2-F CSNI-Switzerland				
e. Core Position 07:			07-P4-A INEL 07-P4-B CSNI-KFK	TRA Hot Cell 1		Vial 07-P4	TAN Hot Shop Pool.
			07-P4-C1	INEL	TRA Hot Cell 1	Vial 07-P4	TAN Hot Shop Pool.
			07-P4-C2	INEL	TRA Hot Cell 1	Can Rad Chem Alpha Wing	TAN Hot Shop Pool.
			07-P4-D INEL	TRA Hot Cell 1 or 2		Vial 07-P4 or 5" Ring	Retain at TRA-657
			07-P4-E CSNI-JRC 07-P4-F INEL	TRA Hot Cell 1		Vial 07-P4	TAN Hot Shop Pool.
2. Core bore rocks:							
a. Core Position D4:							
	27.2		D4-P2-D	ANL-E			
	19.7	8.9:	D4-P2-A1	INEL	TRA Hot Cell 1	Bucket N12-N5-D4 or Canister 68-P11	TAN Hot Shop Pool.

Sample Description			Sample Number	Location or Status			Disposition Recommendation
				Laboratory	Building	Container	
G.2.a (continued)							
Weight (g)	Density (g/cc)						
			D4-P2-A2	INEL	TRA Hot Cell 1	Rad chem 2	TAN Hot Shop Pool.
	19.1		D4-P2-B	CSNI-UK			
	6.8	9.4	D4-P2-C[a]	INEL	TRA Hot Cell 1	Bucket N12-N5-D4 or	TAN Hot Shop Pool.
	4.6		D4-P1-B	CSNI-UK			
	1.3		D4-P1-A	INEL	TRA Hot Cell 1	Bucket N12-N5-D4	TAN Hot Shop Pool.
b. Core Position D8:							
	68.0	8.7:	D8-P4-A1	INEL	TRA Hot Cell 1 or 2	Bucket G8-P11 or 1-1/4 met mount	Retain met mount at TRA-657.
			D8-P4-A2	INEL	TRA Hot Cell	Rad Chem 2	TAN Hot Shop Pool.
	62.0		D8-P4-D	ANL-E			
	51.8		D8-P4-B	INEL	--[b]		
	37.6	7.8:	D8-P4-C1	INEL	TRA Hot Cell 1 or 2	Bucket G8-P11 or 1-1/4 met mount	Retain met mount at TRA-657.
			D8-P4-C2	INEL	TRA Hot Cell 1	Rad Chem 2	TAN Hot Shop Pool.
c. Core Position G8:							
	268.6	8.2:	G8-P10-A1	INEL	TRA Hot Cell 1 or 2	Bucket G8-P11 or 5" ring	Retain 5" ring at TRA-657.
			G8-P10-A1 μcore	INEL	TRA Hot Cell 2	SEM mount	Retain at TRA-657.
			G8-P10-A2 μcore	INEL	TRA Hot Cell 2	SEM mount	Retain at TRA-657.
			G8-P10-A2	INEL	TRA Hot Cell 1	Rad chem 2	TAN Hot Shop Pool.
	198.0	7.4:	G8-P7-A1	INEL	TRA Hot Cell 1 or 2	Bucket G8 or 5" ring	Retain 5" ring at TRA-657.
			G8-P7-A2	INEL	TRA Hot Cell 1	Rad chem 2	TAN Hot Shop Pool.
	163.2	7.3:	G8-P9-A1	INEL	TRA Hot Cell 1 or 2	Bucket G8 or 5" ring	Retain 5" ring at TRA-657.
			G8-P9-A2	INEL	TRA Hot Cell 1	Rad chem 2	TAN Hot Shop Pool.
	157.8	7.6:	G8-P6-B1	INEL	TRA Hot Cell 1 or 2	Bucket G8 or 5" ring	Retain 5" ring at TRA-567.
			G8-P6-B1 μcore	INEL	TRA Hot Cell 2	SEM mount	Retain at TRA-657.
			G8-P6-B2	INEL	TRA Hot Cell 1	Rad chem 2	TAN Hot Shop Pool.
	120.0	8.0:	G8-P5-B1	INEL	TRA Hot Cell 1 or 2	Bucket G8 or 5" ring	Retain 5" ring at TRA-567.
			G8-P5-B2	INEL	TRA Hot Cell 1	Rad chem 2	TAN Hot Shop Pool.
	118.5	7.4:	G8-P8-A1	INEL	TRA Hot Cell 1 or 2	Bucket G8 or 5" ring	Retain 5" ring at TRA-567.

Sample Description			Sample Number	Location or Status: Laboratory	Building	Container	Disposition Recommendation
6.2.c. (continued)							
Weight (g)	Density (g/cc)						
			G8-P8-A2	INEL	TRA Hot Cell 1	Rad chem 2	TAN Hot Shop Pool.
	60.5		G8-P4-B	ANL-E			
	55.1	7.4	G8-P4-A	CSNI-KFK			
	50.1		G8-P5-A	CSNI-KFK			
	50.0		G8-P8-C	CSNI-Switzerland			
	39.1		G8-P8-B	INEL	TRA Hot Cell 1	Bucket G8	TAN Hot Shop Pool.
	38.4		G8-P7-B	ANL-E			
	36.1	8.8:	G8-P7-C1	INEL	TRA Hot Cell 1	Bucket G8	TAN Hot Shop Pool.
			G8-P7-C2	INEL	TRA Hot Cell 1	Rad chem 2	TAN Hot Shop Pool.
	33.8		G8-P9-B	ANL-E			
	21.1	7.7	G8-P6-A	INEL	TRA Hot Cell 1	Bucket G12	TAN Hot Shop Pool.
d Core Position G12:							
	132.2	7.7:	G12-P9-A1	INEL	TRA Hot Cell 1 or 2	Bucket G-12 or 1-1/4 met mount	Retain Met mount at TRA-657.
			G12-P9-A2	INEL	TRA Hot Cell 1	Rad chem 2	TAN Hot Shop Pool.
	90.5	7.8:	G12-P4-A1	INEL	TRA Hot Cell 1 or 2	Bucket G-12 or 1-1/4 met mount	Retain Met mount at TRA-657.
			G12-P4-A2	INEL	TRA Hot Cell 1	Rad chem 2	TAN Hot Shop Pool.
	82.2		G12-P8-A	ANL-E			
	64.3		G12-P10-A	CSNI-JRC			
	60.9	8.5:	G12-P2-B1	INEL	TRA Hot Cell 1 or 2	Bucket G-12 or 1-1/4 met mount	Retain Met mount at TRA-657.
			G12-P2-B2	INEL	TRA Hot Cell 1	Rad chem 2	TAN Hot Shop Pool.
	54.7		G12-P10-B	CSNI-Sweden			
	48.9	7.7	G12-P8-B[a]	INEL	TRA Hot Cell 1	Bucket G-12	TAN Hot Shop Pool.
	46.7		G12-P2-E	CSNI-JRC			
	45.4	7.7	G12-P3-A[a]	INEL	TRA Hot Cell 1	Bucket G-12	TAN Hot Shop Pool.
	40.9	8.3	G12-P2-D[a]	INEL	TRA Hot Cell 1	Bucket G-12	TAN Hot Shop Pool.
	40.8		G12-P7-A	INEL	TRA Hot Cell 1	Bucket G-12	TAN Hot Shop Pool.
	40.6		G12-P6-A	INEL	TRA Hot Cell 1	Bucket G-12	TAN Hot Shop Pool.
	38.9		G12-P4-B	INEL	TRA Hot Cell 1	Bucket G-12	TAN Hot Shop Pool.
	36.9		G12-P6-E	CSNI-JRC			
	34.9		G12-P5-A	INEL	TRA Hot Cell 1	Bucket G-12	TAN Hot Shop Pool.
	33.5		G12-P9-B	CSNI-JRC			
	30.3		G12-P2-C	INEL	TRA Hot Cell 1	Bucket G-12	TAN Hot Shop Pool.
	29.0		G12-P10-D	INEL	TRA Hot Cell 1	Bucket G-12	TAN Hot Shop Pool.
	29.0		G12-P10-C	CSNI-KFK			
	28.4		G12-P2-A	INEL	TRA Hot Cell 1	Bucket G-12	TAN Hot Shop Pool.
	28.2		G12-P8-C	INEL	TRA Hot Cell 1	Bucket G-12	TAN Hot Shop Pool.

Sample Description			Sample Number	Location or Status			Disposition Recommendation
				Laboratory	Building	Container	
G.2.d. (continued)							
Weight (g)	Density (g/cc)						
25.1			G12-P6-B	INEL	TRA Hot Cell 1	Bucket G-12 or Rad chem 2	TAN Hot Shop Pool.
24.9			G12-P9-C	INEL	TRA Hot Cell 1	Bucket G-12	TAN Hot Shop Pool.
24.3			G12-P10-E	INEL	TRA Hot Cell 1	Bucket G-12	TAN Hot Shop Pool.
20.5			G12-P9-D	INEL	TRA Hot Cell	Canister G12	TAN Hot Shop Pool.
19.8			G12-P6-D	INEL	TRA Hot Cell 1	Bucket G-12	TAN Hot Shop Pool.
19.0			G12-P3-B	INEL	TRA Hot Cell	Canister G12	TAN Hot Shop Pool.
18.0			G12-P8-D	INEL	TRA Hot Cell 1	Bucket G-12	TAN Hot Shop Pool.
??.?			G12-P6-C	INEL	TRA Hot Cell 1	Canister G-12	TAN Hot Shop Pool.
e. Core Position K9:							
75.6			K9-P3-C	ANL-E			
67.7			K9-P4-G	CSNI-Canada			
66.3			K9-P4-E	INEL	TAN-607 Pool	Fuel Canister D-174	N/A
61.3		6.9:	K9-P4-D1	INEL	TRA Hot Cell 2	Bucket K9	TAN Hot Shop Pool.
			K9-P4-D2	INEL	TRA Hot Cell 2	Rad chem 2	TAN Hot Shop Pool.
55.8		7.6:	K9-P3-A1	INEL	TRA Hot Cell 2	5-in. ring	Retain 5" ring at TRA-657
			K9-P3-A2	INEL	TRA Hot Cell	Rad chem 2	TAN Hot Shop Pool.
47.0			K9-P4-F	INEL	TAN-607 Pool	Fuel Canister D-174	N/A
43.8		7.4:	K9-P3-D1	INEL	TRA Hot Cell	Canister K9	TAN Hot Shop Pool.
			K9-P3-D2	INEL	TRA Hot Cell	Rad chem 2	TAN Hot Shop Pool.
41.6		7.5	K9-P3-M	CSNI-France			
38.3		6.7	K9-P4-H	INEL	TAN-607 Pool	Fuel Canister D-174	N/A
37.9			K9-P4-N	INEL	TAN-607 Pool	Fuel Canister D-174	N/A
37.7			K9-P3-C	INEL	TRA Hot Cell	Canister K9	TAN Hot Shop Pool.
35.1			K9-P3-J	INEL	TAN-607 Pool	Fuel Canister D-174	N/A
34.6			K9-P4-L	INEL	TAN-607 Pool	Fuel Canister D-174	N/A
33.6			K9-P4-M	ANL-E			
26.8			K9-P4-J	ANL-E			
26.7		7.8:	K9-P3-F1	INEL	TRA Hot Cell	--[b]	
			K9-P3-F2	INEL	TRA Hot Cell 1	Rad chem 2	TAN Hot Shop Pool.
24.5			K9-P3-H	INEL	TAN-607 Pool	Fuel Canister D-174	N/A
24.5		7.4	K9-P4-B	INEL	TAN-607 Pool	Fuel Canister D-174	N/A
14.0			K9-P4-A1	INEL	TRA Hot Cell 2	1-1/4 met mount	Retain met mount at TRA-657.
10.3		7.1	K9-P4-A2	INEL	TRA Hot Cell 1	Rad chem 2	TAN Hot Shop Pool.
24.0			K9-P3-G	CSNI-UK			
23.9			K9-P3-I	INEL	TAN-607 Pool	Fuel Canister D-174	N/A
23.7			K9-P3-E	INEL	TAN-607 Pool	Fuel Canister D-174	N/A
23.2			K9-P4-I	INEL	TAN-607 Pool	Fuel Canister D-174	N/A
20.0			K9-P1-B	INEL	TAN-607 Pool	Fuel Canister D-174	N/A
19.5			K9-P3-B	CSNI-KFK			

Sample Description			Sample Number	Location or Status: Laboratory	Building	Container	Disposition Recommendation
6.2.e. (continued)							
Weight (g)	Density (g/cc)						
19.2			K9-P4-K	INEL	TAN-607 Pool	Fuel Canister D-174	N/A
18.9			K9-P3-K	INEL	TAN-607 Pool	Fuel Canister D-174	N/A
18.9			K9-P4-C	CSNI-KFK			
f. Core Position H5:							
35.6		8.3:	H5-P1-D1	INEL	TRA Hot Cell 1	Bucket H12-D4-H5 or 5" ring	Retain 5" ring at TRA-657.
			H5-P1-D2	INEL	TRA Hot Cell 1	Rad chem 2	TAN Hot Shop Pool.
22.3		9.1:	H5-P1-H1	INEL	TRA Hot Cell 1	Bucket H12-D4-H5	TAN Hot Shop Pool.
			H5-P1-H2	INEL	TRA Hot Cell 1	Rad chem 2	TAN Hot Shop Pool.
18.1			H5-P1-F	INEL	TRA Hot Cell 1	Bucket H12-D4-H5	TAN Hot Shop Pool.
10.5		8.0:	H5-P1-A1	INEL	TRA Hot Cell 2	1-1/4 met mount	Retain met mount at TRA-657.
			H5-P1-A2	INEL	TRA Hot Cell 1	Rad chem 2	TAN Hot Shop Pool.
10.3			H5-P1-E	CSNI-JRC			
9.6			H5-P1-G	INEL	TRA Hot Cell 1	Bucket H12-D4-H5	TAN Hot Shop Pool.
6.0			H5-P1-B	CSNI-KFK			
3.6			H5-P1-C	INEL	TRA Hot Cell 1	Bucket H12-D4-H5	TAN Hot Shop Pool.
g. Core Position H12:							
145.6			H12-P1-A	ANL-E			
0.7			H12-P1-B	INEL	TRA Hot Cell 1	Bucket H12-D4-H5 or Vial H12-P1	TAN Hot Shop Pool.
h. Core Position 07:							
76.3		5.4:	07-P6-A1	INEL	TRA Hot Cell 1	Bucket 09-07 or 5" ring	Retain 5" ring at TRA-657.
			07-P6-A1 Microcore	INEL	TAN HCA	SEM mount	Retain at TRA-657.
			07-P6-A2	INEL	TRA Hot Cell 1	Rad chem 2	TAN Hot Shop Pool.
34.5			07-P5	CSNI-France			
21.8			07-P8-B	CSNI-KFK			
20.0			07-P8-C	INEL	TRA Hot Cell 1	Bucket 09-07	TAN Hot Shop Pool.
7.2			07-P8-A	INEL	TRA Hot Cell 1	Bucket 09-07	TAN Hot Shop Pool.
4.5		7.6:	07-P1-A1	INEL	TRA Hot Cell 1 or 2	Bucket 09-07 or 1-1/4 met mount	Retain met mount at TRA-657
			07-P1-A2	INEL	TRA Hot Cell 1	Rad chem 2	TAN Hot Shop Pool.
			07-P3	CSNI-KFK			
7.7			07-P1-B	INEL	TRA Hot Cell 1	Bucket 09-07	TAN Hot Shop Pool.

Sample Description			Sample Number	Location or Status: Laboratory	Building	Container	Disposition Recommendation
G.2.h (continued)							
Weight (g)	Density (g/cc)						
1. Core Position 09:							
	30.0	6.9:	09-P1-A1	INEL	TRA Hot Cell 1	Bucket 09-07 or TMI-2 Core Bore G8-P11	TAN Hot Shop Pool.
			09-P1-A2	INEL	TRA Hot Cell 1	Rad chem 2	TAN Hot Shop Pool.
	20.4	7.2:	09-P1-B1	INEL	TRA Hot Cell 1 or 2	Bucket 09-07 or 1-1/4 met mount	Retain met mount at TRA-657
			09-P1-B2	INEL	TRA Hot Cell 1	Rad chem 2	TAN Hot Shop Pool.
3. Fuel canister D-174 rocks:							
a. Core Position F6 (D-174 upper region):							
(1)	936	7.5	F6-P1	INEL	TRA Hot Cell 1		Retain at TRA-657
(2)	794	7.3	F6-P2	INEL	TRA Hot Cell 1		TAN Hot Shop Pool
(3)	540	7.7	F6-P3	INEL	TRA Hot Cell 1		Retain at TRA-657
(4)	223	7.3	F6-P4	INEL	TRA Hot Cell 1		TAN Hot Shop Pool
(5)	199	7.3	F6-P5	INEL	TRA Hot Cell 1		TAN Hot Shop Pool
(6)	75	7.3	F6-P6	INEL	TRA Hot Cell 1		Retain at TRA-657
(7)	52	7.4	F6-P7	INEL	TRA Hot Cell 1		TAN Hot Shop Pool
(8)	46	7.5	F6-P8	INEL	TRA Hot Cell 1		Retain at TRA-657.
b. Core Position F6/H8 (D-174 upper and mid-region):							
(1)	1901	7.7	F6/H8-P1	INEL	TRA Hot Cell 1		Retain at TRA-657
(2)	638	7.5	F6/H8-P2	INEL	TRA Hot Cell 1		TAN Hot Shop Pool
(3)	224	6.6	F6/H8-P3	INEL	TRA Hot Cell 1		TAN Hot Shop Pool
(4)	262	7.5	F6/H8-P4	INEL	TRA Hot Cell 1		Retain at TRA-657
(5)	178	6.5	F6/H8-P5	INEL	TRA Hot Cell 1		TAN Hot Shop Pool
(6)	202	6.7	F6/H8-P6	INEL	TRA Hot Cell 1		Retain at TRA-657
(7)	189	7.9	F6/H8-P7	INEL	TRA Hot Cell 1		Retain at TRA-657
(8)	144	8.5	F6/H8-P8	INEL	TRA Hot Cell 1		TAN Hot Shop Pool
(9)	121	6.5	F6/H8-P9	INEL	TRA Hot Cell 1		TAN Hot Shop Pool
(10)	109	6.9	F6/H8-P10	INEL	TRA Hot Cell 1		TAN Hot Shop Pool.
c. Core Position M11 (D-174 lower region):							
(1) Big Rock				INEL	TAN-607 Pool	Fuel Canister D-174	N/A
(2)	1671	7.5	M11-P1	INEL	TRA Hot Cell 1		Retain at TRA-657

Sample Description			Sample Number	Location or Status: Laboratory	Building	Container	Disposition Recommendation
6.3.c (continued)							
Weight (g)	Density (g/cc)						
(3)	1075	7.6	M11-P2	INEL	TRA Hot Cell 1		Retain at TRA-657
(4)	265	8.0	M11-P3	INEL	TRA Hot Cell 1		TAN Hot Shop Pool
(5)	105	7.3	M11-P4	INEL	TRA Hot Cell 1		Retain at TRA-657
(6)	91	7.9	M11-P5	INEL	TRA Hot Cell 1		TAN Hot Shop Pool
(7)	71	7.8	M11-P6	INEL	TRA Hot Cell 1		TAN Hot Shop Pool
(8)	60	8.2	M11-P7	INEL	TRA Hot Cell 1		TAN Hot Shop Pool
(9)	56	8.2	M11-P8	INEL	TRA Hot Cell 1		TAN Hot Shop Pool
(10)	49	7.9	M11-P9	INEL	TRA Hot Cell 1		TAN Hot Shop Pool
(11)	63	8.4	M11-P10	INEL	TRA Hot Cell 1		Retain at TRA-657.
4. CMS 1-13C 6/87 shipment, M9/K9 core position rocks:							
a.	86	8.0	M9/K9-P1	INEL	TRA Hot Cell 1		Retain at TRA-657
b.	54	7.1	M9/K9-P2	INEL	TRA Hot Cell 1		TAN Hot Shop Pool
c.	21	7.9	M9/K9-P3	INEL	TRA Hot Cell 1		TAN Hot Shop Pool
d.	26	7.7	M9/K9-P4	INEL	TRA Hot Cell 1		Retain at TRA-657
e.	31	7.0	M9/K9-P5	INEL	TRA Hot Cell 1		Retain at TRA-657
f.	74	8.1	M9/K9-P6	INEL	TRA Hot Cell 1		Retain at TRA-657
g.	24	7.5	M9/K9-P7	INEL	TRA Hot Cell 1		TAN Hot Shop Pool
h	27	7.1	M9/K9-P8	INEL	TRA Hot Cell 1		TAN Hot Shop Pool
i.	24	7.3	M9/K9-P9	INEL	TRA Hot Cell 1		TAN Hot Shop Pool
j.	26	7.9	M9/K9-P10	INEL	TRA Hot Cell 1		TAN Hot Shop Pool.

a. Identified as an archive sample

b Not located.

c. One third removed for dissolution.

d. TRA Hot Cell 1 1, Bucket CSMI-2 or Rad Chem, Alpha Wing.

APPENDIX E

TMI-2 REACTOR VESSEL INTERNAL VIDEO SURVEY AND MONITORING TAPE RECORDING LIST

APPENDIX E

TMI-2 REACTOR VESSEL INTERNAL VIDEO SURVEY AND MONITORING TAPE RECORDING LIST

A listing of tape recordings of the TMI-2 reactor vessel internal video survey and monitoring is found in Table E-1.

TABLE E-1. TMI-2 REACTOR VESSEL INTERNAL VIDEO SURVEY AND MONITORING TAPE RECORDING LIST

		Tape Record Data			
		TSA File		IRC File	
		3/4 In. Tapes			1 In. Tapes
Date Recorded	Title/Description	Number[a]	Minutes	Number	Number
07/20/82	Quick Look Press Release (core cavity)	37	60		
07/20/82	Quick Look #1 and #2 (core cavity)	22	60		
07/20/82	Quick Look #3 and #4 (core cavity)	25	60		
07/20/82	TMI-2 CCTV Excerpts of Core Internals	29	2		
07/XX/82	Quick Look #2 Enhanced (core cavity)	20	?		
07/XX/82	The Quick Look into the TMI II Unit II (devine narration)	24	18		
08/12/82	TMI-2 Quick Look 3--Edited Version (core cavity)	23	26		
10/13/83	RCS Sampling Inspection, Entry 304, Tape 1 of 2	27	?		
04/04/84 thru 04/06/84	TMI-2 Core Cavity:	108, 109, 149, 150, 151, 152, 153, 154, 155, 156, 157, 158		1A3 and 1B3 2A3, 2B3 3A3, 3B3 4A3, 4B3 5A3, 5B3	1,1A2 and 1B2 2,2A2 and 2B2 3,3A2 and 3B2 4,4A2 and 4B2 5,5A2 and 5B2
04/04 and 06/84	TMI-2 core cavity-composite of horizontal scans 3, 5, 8, 10 and 14			6	
07/XX/84	TMI-2 Head Removal	34 and 44	14		
10/25/84	TMI-2 plenum and core cavity				1
10/26 and 27/84	TMI-2 plenum and core cavity				2
10/27/84	TMI-2 plenum and core cavity				3
10/29/84	TMI-2 plenum and core cavity				4
10/29 and 30/84	TMI-2 plenum and core cavity				5
10/30/84	TMI-2 plenum and core cavity				6 and 7
10/31/84	TMI-2 plenum and core cavity				8
10/31 and 11/01/84	TMI-2 plenum and core cavity				9
11/01/84	TMI-2 plenum and core cavity				10
11/01 and 02/84	TMI-2 plenum and core cavity				11
11/02 and 03/84	TMI-2 plenum and core cavity				12
11/03 and 04/84	TMI-2 plenum and core cavity				13
11/05 and 07/84	TMI-2 plenum and core cavity				14
02/20/85	Lower Vessel Examination	5 and 69	45		
02/20/85	TMI-2 Lower Head Inspection	6 and 21	11		
04/01/85	TMI-2 Core Conditions	65	10		
05/15/85	Plenum Lift Entry 613	13	59		

TABLE E-1. (continued)

Date Recorded	Title/Description	Tape Record Data: TSA File, 3/4 In. Tapes, Number[a]	TSA File, 3/4 In. Tapes, Minutes	IRC File, Number	IRC File, 1 In. Tapes, Number
07/17/85	Reactor Vessel Lower Head: Reel 1 Part 1 of 2	117	60		
	Data Management Tape 1	126	65		1
07/18/85	Reactor Vessel Lower Head: Reel 1 Part 2 of 2	118	60		
	Data Management Tape 2	127	120		
07/20/85	Reactor Vessel Lower Head: Reel 2, Part 1 of 2	115	60		
	Data Management Tape 3	128	120		2
07/22/85	Reactor Vessel Lower Head: Reel 2, Part 2 of 2	116	60		
	Data Management Tape 4	129	180		
07/23/85	Reactor Vessel Lower Head: Reel 3, Part 1 of 1	114	60		3
	Data Management Tape 5	130	150		
09/20/85	Core Void Inspection Entry 692	10	40		
09/20/85	Core Void Inspection Video Entry 693	11	7		
09/23/85	Core Void Video and CPS Interference	12	60		
11/XX/85	Conditions Inside the TMI-2 Reactor Vessel	112	13		
11/21/85	Core Void Exam	159	55		
12/06/85	Core Cavity Walls and Floor				1
12/07/85	Core Cavity Walls and Floor				2 and 3
12/11/85	D-136 Fuel Canister Loading	61	41		
12/14/85	D-141 Fuel Canister Loading	63 and 136	35		
12/21/85	Core Cavity Walls and Floor				1
12/22/85	Entry 774 Fueled Rod Segment Acquisition: Tape 1	55	60		
	Tape 2	56	60		
	Tape 3	57 and 70	23		
12/28 and 29/85	Lower Head Video Exam Phase II	51[b]	60		1 and 2
No Date	TMI-2 Core and Plenum Examination (JMB Narration)	1A and 1B	10		
01/08/86	D-139 Fuel Canister Loading	62	37		
01/09/86	Fuel Canister D-140 Loading	82	80		
01/16/86	D-153 Fuel Canister Loading	60	58		
01/18/86	D-155 Fuel Canister Loading	53 and 120	60		
01/20/86	D-160 Fuel Canister Loading	58	40		
01/21/86	Examination of Fuel Assembly P4, TMI-2 Defueling Entry 801	52	60		
01/23/86	Fuel Canister D-154 Loading	81	40		
01/29/86	D-138 Fuel Canister Loading	59 and 119	15		
02/02/86	D-137 Fuel Canister Loading Entry 811 and 812, Tape 1 of 2	123	60		
02/03/86	D-137 Fuel Canister Loading Entry 814 Tape 2 of 2	124	60		
02/XX/86	Biological Growth in the TMI-2 RCS	72	3		
03/19/86	D-117 Fuel Canister Loading	122	60		
04/12/86	D-128 Fuel Canister Loading	121	60		

TABLE E-1. (continued)

Date Recorded	Title/Description	Tape Record Data: TSA File, 3/4 In. Tapes: Number[a]	Tape Record Data: TSA File, 3/4 In. Tapes: Minutes	Tape Record Data: IRC File: Number	Tape Record Data: IRC File, 1 In. Tapes: Number
06/01/86	Long Range Core Void Entry 932 Tape 1 of 3	75[b]	60		
06/01/86	Long Range Core Void Entry 932 Tape 2 of 3	76[b]	60		
06/01/86	Long Range Core Void Entry 932 Tape 3 of 3	79[b]	60		
06/02/86	TMI-2 Core Video Core Bore Info	74[b]	2		
06/08/86	Core Bore Locations	77[b] and 80[b]	24		
06/XX/86	TMI-2 Core Video Core S/W Quadrant Core Bore Locations	78[b]	60		
07/03/86	Core Bore Drilling Hole #1 -N5 Tape 1 of 1	83[b]	60		
07/05/86	Core Bore Location Video Hole #1--N5 Tape 1 of 2	94[b]	50		1
07/06/86	Core Bore Location Video Hole #1--N5 Tape 2 of 2	95[b]	60		
07/08/86	Core Bore Video Inspection Hole #2--N12 Tape 1	86[b]	40		
07/09/86	Core Bore Video Inspection Hole #2--N12 Tape 2	87[b]	60		1 and 2
07/09/86	Core Bore Video Inspection Hole #2--N12 Tape 3	88[b]	60		
07/XX/86	Core Bore Location G8 Hole #3, Part I	84[b]	60		1
07/XX/86	Core Bore Location G8 Hole #3, Part II	85[b]	60		
07/14/86	Core Bore Video Inspection Hole #4 G12 Tape 1 of 2	92[b]	60		
07/15/86	Core Bore Video Inspection Hole #4 G12 Tape 2 of 2	93[b]	35		
07/16/86	Core Bore Video Inspection Hole #5 K9 Tape 1 of 3	89[b]	60		
07/16/86	Core Bore Video Inspection Hole #5 K9 Tape 2 of 3	90[b]	60		1 and 2
07/16/86	Core Bore Video Inspection Hole #5 K9 Tape 3 of 3	91[b]	60		
07/19/86	Core Bore Video Inspection Hole #6 D-8 Tape 1 of 2	96[b] and 182	60		1
07/19/86	Core Bore Video Inspection Hole #6 D-8 Tape 2 of 2	97[b] and 183	60		
07/20/86	Core Bore Video Inspection Hole #7 K6 Tape 1 of 3	98[b]	60		
07/20/86	Core Bore Video Inspection Hole #7 K6 Tape 2 of 3	99[b]	60		1 and 2
07/20/86	Core Bore Video Inspection Hole #7 K6 Tape 3 of 3	100[b]	60		
07/23/86	Core Bore Video Hole #8 D4 Tape 1 of 2	101[b]	60		1
07/23/86	Core Bore Video Hole #8 D4 Tape 2 of 2	102[b]	60		
07/24/86	Core Bore Video Hole #9 O-7 Tape 1 of 2	106[b]	60		1
07/24/86	Core Bore Video Hole #9 O-7 Tape 2 of 2	107[b]	60		

TABLE E-1. (continued)

Date Recorded	Title/Description	Tape Record Data: TSA File, 3/4 in. Tapes: Number[a]	TSA File, 3/4 in. Tapes: Minutes	IRC File: Number	IRC File, 1 in. Tapes: Number
07/26/86	Core Bore Video Hole #10 0-9 Tape 1 of 3	103[b]	60		
07/26/86	Core Bore Video Hole #10 0-9 Tape 2 of 3	104[b]	60		1 and 2
07/27/86	Core Bore Video Hole #10 0-9 Tape 3 of 3	105[b]	34		
07/XX/86	TMI-2 Core Bore Summary--Locations D4, D8, G8, G12, K6, K9, M5 and M12	110	60		
07/XX/86	TMI-2 Core Bore Summary -Locations 07 and 09	111	9		
07/XX/86	Core Stratification Sampling	132	7		
10/XX/87	GPUN and DOE Core Stratification Sampling	134	11.5		
10/11/87	Core Void Region Inspection Tape 1 of 7	137[b]	60		
10/11/87	Core Void Region Inspection Tape 2 of 7	138[b]	60		
10/11/87	Core Void Region Inspection Tape 3 of 7	141[b]	60		
10/11/87	Core Void Region Inspection Tape 4 of 7	142[b]	60		
10/11/87	Core Void Region Inspection Tape 5 of 7	139[b]	60		
10/11/87	Core Void Region Inspection Tape 6 of 7	140[b]	60		
10/11/87	Core Void Region Inspection Tape 7 of 7	143[b]	60		
10/12/86	TMI-2 Core Void Exam	133[b]	18		
10/23/87	Swiss Cheese Test Pattern Inspection	144	10		
10/23/86	Core Bore Test Hole Inspection/Parallel, Concentric Scans	146	18		
11/21/86	Debris Surface (Vertical crack)	147	60		
11/21/86	Debris Surface	148	11		
12/05/86	Standing Assemblies at 312 ft elevation - Tape 1	164[b]	60		
12/05/86	TMI-2 Core Video Inspection - Tape 2	165[b]	60		
12/05/86	TMI-2 Core Video Inspection - Tape 3	166[b]	60		
12/05/86	TMI-2 Core Video Inspection - Tape 4	167[b]	60		
12/06/86	TMI-2 Core Video Inspection - Tape 5	168[b]	60		
12/06/86	TMI-2 Core Video Inspection - Tape 6	169[b]	60		
12/06/87	Debris Bed Probing	170[b]	20		
12/05-06/86	Debris Bed Probing - excerpts	173	10		
02/07/87	Debris Bed Map Probe - Tape 1 of 6	197[b]	57		
02/07/87	Debris Bed Map Probe - Tape 2 of 6	198[b]	62		
02/07/87	Debris Bed Map Probe - Tape 3 of 6	199b	62		
02/07/87	Debris Bed Map Probe - Tape 4 of 6	200[b]	39		
02/07/87	Debris Bed Map Probe - Tape 5 of 6	201[b]	49		
02/07/87	Debris Bed Map Probe - Tape 6 of 6	202[b]	41		
02/12/87	Lower Head Inspection via Access Hole #5, Tape 1 of 8	203[b]	62		
02/13/87	Lower Head Inspection via Access Hole #5, Tape 2 of 8	204[b]	62		
02/13/87	Lower Head Inspection via Access Hole #5, Tape 3 of 8	205[b]	57		
02/13/87	Lower Head Inspection via Access Hole #5, Tape 4 of 8	206[b]	62		
02/14/87	Lower Head Inspection via Access Hole #14, Tape 6 of 8	207[b]	54		
02/15/87	Lower Head Inspection via Access Hole #14, Tape 7 of 8	208[b]	62		

APPENDIX F

TMI-2 FUEL CANISTER CONTENTS

APPENDIX F
TMI-2 FUEL CANISTER CONTENTS

A listing of TMI-2 fuel canister contents and storage locations is given in Table F-1.

TABLE F-1. TMI-2 FUEL CANISTER CONTENTS

Can. No.	Date Loading Completed	Core Material (lb)	Partial Fuel Assembly				End Fittings				Loose Debris			TAN Pool Location on 10/01/87	Comments
			CR	BPR	Perim.	No ID	End Box and Spider Set	End Box	Spider	BPR Retainer	Fuel Rods	Solid. Core Material	Unsegr.		
D-136	12/11/85	277				2	M13,1BPR,1	D9,5	B12		X			1-D	N-source
D-141	12/14/85	320	C7		H1		H8,E13,N9, O6,L8	K15	C11	L3				28-C	Unloaded
K-501	01/07/86	1098											X	19-E	Vacuumed material
D-139	01/08/86	310					3	9	E4	E4,2				1E	One BPR UEF set
D-140	01/09/86	260					H14,3	4			X			1F	
D-153	01/16/86	345			E2		O8,B10,D4, D8,G3,P6	F14,O6, O10,R7		G14,K4				N/A	Unloaded, RWMC
D-155	01/18/86	350	1	N5	2		B9,C9,D13, F12,M5,M8	4	G3,3	G4,K8, O12,3				42-C	
D-160	01/20/86	245				1	H10,L2,2	5	D6,D12, E8,M8,2	K2,1				1B	2 APSR
D-154	01/23/86	652			P4		C4,C5	3	P4					1A	N-source
D-138	01/29/86	233					C12,E3,N12	2	F2, K11	1	X		X	1C	
D-137	02/03/86	710[a]											X[a]	42-D	
D-143	02/06/86	1485[a]									X		X[a]	21-E	No visibility
D-151	02/08/86	1594[a]											X[a]	18-F	No visibility
D-148	02/11/86	1542[a]											X[a]	15-F	No visibility
D-157	02/14/86	1398[a]											X[a]	21-D	No visibility
D-146	02/17/86	1528[a]											X[a]	34-B	No visibility
D-145	02/19/86	1514[a]											X[a]	15-C	No visibility
D-149	02/24/86	1550[a]											X[a]	6-D	No visibility
D-158	02/26/86	1558[a]											X[a]	15-A	No visibility
D-147	03/01/86	1551[a]											X[a]	21-F	No visibility
D-164	03/04/86	1349[a]											X[a]	6-F	No visibility
D-156	03/06/86	1627[a]											X[a]	18-D	No visibility
D-152	03/07/86	1367[a]											X[a]	34-C	No visibility
D-150	03/08/86	1505[a]											X[a]	21-D	No visibility
D-163	03/08/86	1422[a]											X[a]	42-B	No visibility
D-161	03/15/86	1414[a]											X[a]	6-E	No visibility
D-144	03/16/86	1355[a]											X[a]	21-C	No visibility
D-165	03/17/86	1457[a]											X[a]	18-E	No visibility
D-197	03/18/86	1333[a]											X[a]	21-A	No visibility
D-196	03/20/86	1343[a]											X[a]	17-F	No visibility
D-132	03/23/86	1418[a]											X[a]	17-D	No visibility

TABLE F-1 (CONTINUED)

Can No.	Date Loading Completed	Core Material (lb)	Partial Fuel Assembly: CR	Partial Fuel Assembly: BPR	Partial Fuel Assembly: Perim.	Partial Fuel Assembly: No ID	End Fittings: End Box and Spider Set	End Fittings: End Box	End Fittings: Spider	End Fittings: BPR Retainer	Loose Debris: Fuel Rods	Loose Debris: Solid. Core Material	Loose Debris: Unsegr.	TAN Pool Location on 10/01/87	Comments
D-131	03/25/86	1293[a]											X[a]	38-A	No visibility
D-111	03/26/86	1429[a]											X[a]	38-C	No visibility
D-117	02/27/86	1343[a]											X[a]	42-E	No visibility
D-106	03/30/86	1483[a]											X[a]	38-D	No visibility
D-108	03/31/86	1460[a]											X[a]	17-A	No visibility
D-120	04/02/86	1350[a]											X[a]	42-A	No visibility
D-116	04/05/86	1474[a]											X[a]	6C	No visibility
D-125	04/06/86	1332[a]											X[a]	42-F	No visibility
D-105	04/09/86	1417[a]											X[a]	17-C	No visibility
D-126	04/10/86	1293[a]											X[a]	38-B	No visibility
D-127	04/12/86	1357[a]											X[a]	18-C	No visibility
D-112	04/24/86	1326[a]											X[a]	35-D	No visibility
D-199	06/17/86	1617				1							X	38-F	No visibility
D-201	07/XX/86	40	H12	H5								H5,H12		28-D	Core bores, unloaded
D-198	07/XX/86	42		G8,G12								G8,G12		28-F	Core bores, unloaded
D-159	07/XX/86	40	D8,K9									D8,K9		28-A	Core bores, unloaded
D-200	07/XX/86	18		K6							D4			28-B	Core bores, unloaded
D-118	07/XX/86	47	07,09									07,09		28-E	Core bores, unloaded
D-167	08/18/86	963											X	17-B	
D-169	08/21/86	1495											X	6-B	
D-170	08/21/86	1360											X	38-E	
D-142	09/05/86	1279										X	X	17-E	
D-168	10/05/86	753				1		4		1	X		X	15-E	
D-110	10/08/86	798									X		X	15-B	
D-205	12/16/86	736						X			X		X	TN1	
D-113	12/21/86	877[b]										X[b]	X	18-A	
D-204	12/23/86	827[b]										X[b]	X	32-A	
D-174	12/24/86	290[b]									X	X[b]	X	6-A	Unloaded
D-175	12/27/86	616[b]										X[b]	X	15-D	
D-188	01/02/87	1644[b]										X[b]	X	36-F	
D-180	01/04/87	1639[b]									X	X[b]	X	36-A	
D-189	01/05/87	1493[b]										X[b]	X	21-B	
D-181	01/08/87	1473[b]									X	X[b]	X	34-E	
D-177	01/09/87	1487[b]									X	X[b]	X	32-E	

TABLE F-1 (CONTINUED)

Can. No.	Date Loading Completed	Core Material (lb)	Partial Fuel Assembly				End Fittings				Loose Debris			TAN Pool Location on 10/01/87	Comments
			CR	BPR	Perim.	No ID	End Box and Spider Set	End Box	Spider	BPR Retainer	Fuel Rods	Solid. Core Material	Unsegr.		
D-171	01/10/87	953[b]										X[b]	X	34-A	
D-176	01/13/87	1172[b]									X	X[b]	X	32-F	
D-179	01/20/87	1117[b]						1				X[b]	X	32-C	
D-194	01/21/87	772[b]									X	X[b]	X	34-D	
D-166	01/24/87	1583[b]									X	X[b]	X	36-E	
D-186	01/31/87	1342[b]										X[b]	X	32-D	Air lift tool
D-185	02/04/87	1198[b]										X	X	32-B	Air lift tool
D-184	03/07/87	440						X					X	TMI	
D-193	03/07/87	414				X								TMI	
D-215	03/17/87	349				X								TMI	
D-178	03/17/87	525				X								TMI	
D-187	03/19/87	867			A7								X	35-F	
D-191	03/21/87[c]	148[c]					X				X			TMI	
D-206	03/21/87[c]	482[c]				1								TMI	
D-101	03/21/87[c]	534[c]				1								TMI	
D-119	03/22/87	880			A6									35-E	
D-190	03/25/87[c]	221[c]				1								TMI	
D-183	04/02/87	1039									X	X	X	8-B	Some air lift
D-195	04/02/87	928			A7						X	X	X	8-C	
D-211	04/03/87	994				1					X	X	X	8-E	
D-208	04/07/87	605				1					X	X	X	8-D	
D-217	04/07/87	963						X		X	X	X		Some air lift	
D-182	04/08/87	667									X	X	X	8-A	
D-209	04/15/87	1169						1			X	X	X	35-C	
D-214	04/16/87	1250									X	X	X	35-A	Some air lift
D-213	05/01/87	1024						1				X		8-F	Air chisel rock fragment
D-212	05/02/87	501						1			X	X	X	36-D	
D-104	05/02/87	800	B6								X	X	X	35-B	B6 lower end
D-121	05/02/87	797									X	X	X	19-C	
D-207	05/07/87	1067									X	X	X	36-C	
D-114	05/20/87[c]	298[c]									X			TMI	
D-219	05/20/87[c]	668[c]	B8 btm	C8,btm										TMI	
D-220	05/22/87[c]	494[c]				X					X			TMI	

TABLE F-1 (CONTINUED)

Con. No.	Date Loading Completed	Core Material (lb)	Partial Fuel Assembly				End Fittings				Loose Debris			TAM Pool Location on 10/01/87	Comments
			CR	BPR	Perim.	No ID	End Box and Spider Set	End Box	Spider	BPR Retainer	Fuel Rods	Solid. Core Material	Unsegr.		
D-107	05/22/87[c]	361[c]				X					X			TMI	
D-120	05/22/87[c]	180[c]					X				X			TMI	
D-218	06/04/87[c]	391[c]									X			TMI	
D-192	06/04/87	1082			A10						X	X	X	24-A	
D-216	06/05/87	816			A9 btm									TMI	
D-224	06/05/87	795		C10 btm								X			TMI
D-221	05/31/87	1084	C9 btm	B9 btm											
D-222	06/05/87	868	B10								X			24-B	B10 lower end
D-210	06/06/87	534						1			X			24-B	
D-227	06/12/87	879	D8,C11											9-C	Lower ends, Gd
D-225	06/13/87	467						Lower			X			24-F	
D-226	06/13/87	1065	D10 btm	D9 btm							X			19-F	APSR
D-223	06/16/87	1055			B11						X		X	9-A	
D-229	06/19/87	542	D6	D7										24-C	Lower ends, 1 APSR
D-231	06/21/87	639			B5									24-E	
D-228	06/24/87	881		D5,E4										9-B	Lower ends
D-267	06/25/87	1093	E5	C4										36-B	Lower ends
D-268	06/26/87	892			B4									9-D	
D-230	07/03/87	869	C5	E8							X	X		9-E	C5 and E8 lower ends
D-122	07/03/87	1040			B12 btm							X	X		9-F
D-269	07/03/87	896	C12 btm								X	X		31-F	Rock, E-9 in-core instr. string
D-162	07/07/87	1028	E11 btm											TMI	
D-266	07/07/87	1068	D4,E9											36-E	Lower ends
D-273	07/09/87	912	E7	E6,F5										31-D	Lower ends
D-272	07/10/87	883	F6,F8	F7										31-A	Lower ends
D-270	07/12/87	1000		D3,G6										31-B	Lower ends
D-271	07/14/87	961			C3 btm		F4 btm							31-E	Test pattern
D-277	07/17/87	605	G5	F3,G4										31-C	Lower ends G5 w/in-core instr. F3 & G4 in test pattern
D-278	07/18/87	843	E3,G3											26-D	Test pattern, lower ends
D-279	07/31/87	931	F2,G7								X			26-F	Lower ends
D-286	07/31/87	648		G8,F9							X			26-A	Lower ends
D-287	07/31/87	563	H2 btm								X	X		26-B	

TABLE F-1 (CONTINUED)

Can. No.	Date Loading Completed	Core Material (lb)	Partial Fuel Assembly				End Fittings				Loose Debris			TAN Pool Location on 10/01/87	Comments
			CR	BPR	Perim.	No ID	End Box and Spider Set	End Box	Spider	BPR Retainer	Fuel Rods	Solid. Core Material	Unsegr.		
D-284	08/01/87	1133	K3 btm	H3 btm							X	X		26-E	
D-285	08/01/87	1072			E2 btm						X		X	26-C	
D-283	08/05/87	954	F12 btm	F11 btm										13-C	APSR
D-276	08/08/87	1180	G11 btm	D13 btm							X			19-D	
D-280	08/08/87	1079	E13 btm	E12 btm							X			30-B	
D-282	08/09/87	780	F10 btm	E10 btm								X			13-B
D-292	08/12/87	1066	G13 btm	F13 btm										13-D	
D-293	08/12/87	929	D12 btm	G12 btm										30-A	
D-281	08/14/87	1128	H12 btm	H13 btm										30-D	Gd_2O_3
D-296	08/16/87	1024	K11 btm	G14 btm										30-C	
D-288	08/21/87	1260	K13	H11,G10										19-A	Lower ends
D-295	08/25/87	1085	H14,G9	K10										TMI	Lower ends
D-289	08/25/87	712		L11,K12										TMI	Lower ends
D-203	08/26/87	1172	H10,M11	H9								X		10-E	Lower ends
D-294	08/31/87	1088		F14,L10										10-A	Lower ends
D-300	09/03/87	1299	N10,N12												Lower ends, APSR
D-129	09/03/87	1216		M10,M12							X	X			Lower ends
D-301	09/02/87	1163	O11 btm	N11 btm							X	X			
D-307	09/10/87	986			F15 btm									10-D	
D-306	09/11/87	1020			G15 btm							X	X		10-B
D-305	09/11/87	1019			E14 btm						X	X		10-F	
D-298	09/12/87	1284	L12 btm	L13 btm							X	X	X	19-B	APSR
D-291	09/16/87	710		L9 btm	H15 btm						X			13-F	
D-304	09/17/87	1058		O10,K14							X			13-E	Lower ends
D-173	09/17/87	1049	L14,M9											30-E	Lower ends
D-172	09/17/87	1011			L15 btm						X			13-A	
D-235	09/20/87	972			P11 btm						X	X		30-F	
D-290	09/20/87	905			K15 btm						X		X		
D-232	09/19/87	1255	P10 btm	N9 btm											
D-234	09/19/87	1092			P12 btm										
D-233	09/23/87	1157	P8 btm	O8 btm							X				
D-236	09/24/87	1004	O9 btm	P9 btm							X				
D-238	09/25/87	1192	H4	H5,K4											Lower ends, Gd_2O_3