233
7/22/81

B5824

Dr. 2845 GEND

010
VOL. II

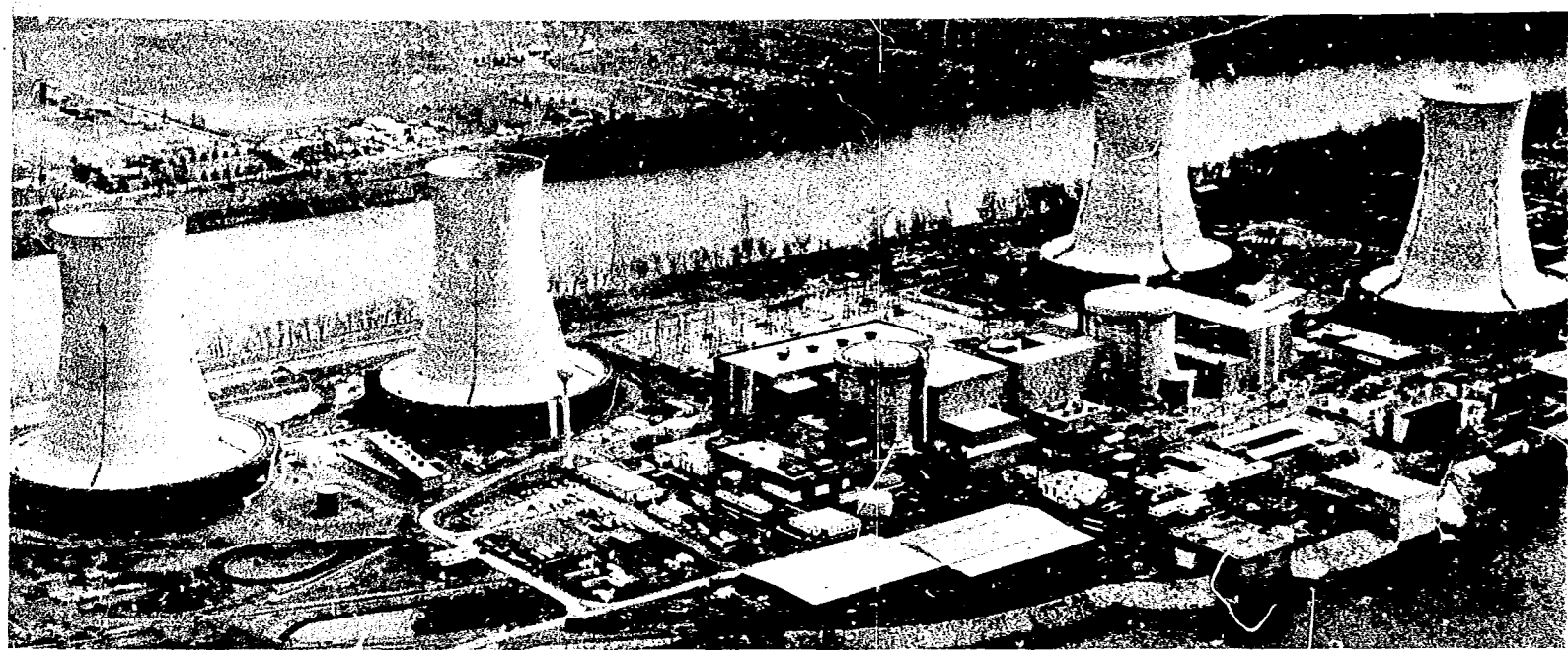

GEND

General Public Utilities • Electric Power Research Institute • U.S. Nuclear Regulatory Commission • U.S. Department of Energy

MASTER

In-Vessel Inspection Before Head Removal: TMI II Phase II (Tooling and Systems Design)

D. W. Greenlee

July 1981

Prepared for the
U.S. Department of Energy
Three Mile Island Operations Office
Under DOE Contract No. DE-AC07-76IDO1570

DISTRIBUTION OF THIS DOCUMENT IS UNLIMITED

CEND-010, Vol. II
Distribution Category: UC-78
TMI Supplement

IN-VESSEL INSPECTION BEFORE HEAD REMOVAL: TMI II PHASE II (TOOLING AND SYSTEMS DESIGN)

D. W. Greenlee

Published July 1981

Prepared by Babcock & Wilcox
for GPU Service Corporation
Under Subcontract No. 595-7100

DISCLAIMER

Prepared for EG&G Idaho, Inc.
Under Subcontract No. K-9003
and the U.S. Department of Energy
Three Mile Island Operations Office
Under DOE Contract No. DE-AC07-76IDO1570

DISTRIBUTION OF THIS DOCUMENT IS UNLIMITED

ABSTRACT

Since the events at the Three Mile Island Nuclear Station (Unit II) on March 28, 1979, there has been much analysis and speculation as to the condition of the reactor core. The purpose of the In-Vessel Inspection Before Head Removal project is to provide a video inspection of the reactor internals, including the tops of some of the fuel assemblies. This "early look" will be a data point and serve to guide the rest of the reactor disassembly program. The inspection will be accomplished by lowering a video camera through a Control Rod Drive Nozzle and manipulating it around the plenum and down to the top of the reactor core.

TABLE OF CONTENTS

	PAGE
TITLE PAGE	i
ABSTRACT	ii
TABLE OF CONTENTS	iii
LIST OF FIGURES	v
LIST OF TABLES	vi
I. INTRODUCTION	1
A. Objective	1
B. Task Description	1
C. General Approach	2
D. Summary	3
E. Tooling and Equipment Summary	5
II. RADIOLOGICAL BOUNDARIES	13
A. Purge System	13
B. Other Radiological Boundaries	15
1. Manipulator Support Tube	15
2. Temporary Penetration Closures	15
3. Permanent Penetration Closures	15
III. PRIMARY WATER LEVEL SENSING SYSTEM	16
A. System Requirements	16
IV. CRDM REMOVAL	19
A. Deviations From Procedures Presented In Phase I	19
1. Cutting Techniques	19
2. Destructive CRDM Removal Procedures	19
3. In-Head Leadscrew Cutter	20
4. Leadscrew Pin Torque Shearing Option	20
B. Normal CRDM Removal Procedures	21
C. Contingency Tooling	23
1. CRDM Holddown Bolt Removal Tool	23
2. Stator Removal Tool	24
3. Plasma Arc Cutting System	25
4. Push/Pull Leadscrew/Extension Separator	25
5. Leadscrew Support Clamp	26
6. Leadscrew Holding Tool	26
7. Leadscrew Lowering Tool	27

TABLE OF CONTENTS (Con't.)

		PAGE
	D. Contingency CRDM Removal Procedure	27
	E. Axial Power Shaping Rod Drive Mechanism Removal	29
	F. Operation With Missile Shields In Place	30
V.	VIDEO EQUIPMENT	39
	A. Functional Requirements	39
	B. Camera	40
	1. System Description	40
	2. Accessories	41
	3. Recommended Equipment and Spare Parts	41
	C. Video Recorder and Monitor	41
	D. Lighting	42
	E. Murky Water Viewing	44
	F. Other Inspection Equipment Considered	45
VI.	MANIPULATORS	49
	A. Functional Requirements	49
	1. Camera	49
	2. Auxiliary Lighting	50
	B. Description	51
VII.	RADIOACTIVE EQUIPMENT STORAGE	55
	A. Reactor Component Storage	55
	B. Tool Storage	55
	C. Special Equipment Storage	56
VIII.	MOCK-UPS	57
IX.	MISCELLANEOUS EQUIPMENT	58
X.	INTERFACE REQUIREMENTS	59
XI.	INGRESS OF EQUIPMENT	61
XII.	SWIPE SAMPLING	62
	APPENDIX I	63
	APPENDIX II	65
	APPENDIX III	68
	APPENDIX IV	69
	APPENDIX V	72
	APPENDIX VI	77
	APPENDIX VII	82

LIST OF FIGURES

FIGURE		PAGE
1.1	Location of Control Assemblies	9
1.2	General Approach	10
1.3	Reactor and Service Structure	11
1.4	Inspection Locations	12
4.1	In-Head Leadscrew Holding Tool	31
4.2	CRDM Removal	32
4.3	Special Leadscrew Nut Tool	33
4.4	Special Leadscrew Lifting Tool	34
4.5	"Window" Method	35
4.6	"Punch" Method	36
4.7	Leadscrew Lowering Tool	37
4.8	APSR Removal	38
6.1	Camera and Light Manipulator	53
6.2	Murky Water Manipulator	54
A2.1	Test Stand	67
A4.1	Pin Shear Test Block	71
A5.1	Test Assembly	74
A5.2	Part 'A' Guide	75
A5.3	Tube End	76

LIST OF TABLES

TABLE		PAGE
1.1	Inspection Locations	6
1.2	Tooling and Equipment Summary	8
5.1	Camera Equipment	47
5.2	Video Equipment	48

I. INTRODUCTION

B&W was assigned the task to perform Phase I of the Three Mile Island Unit 2 Nuclear Generation Station (TMI-II) Reactor Vessel Inspection Before Head Removal by General Public Utilities Service Corporation on June 9, 1980. The definition of work was outlined in Babcock & Wilcox proposal letter B&W/GPU-80-67, dated May 1, 1980. Approval was obtained at the end of Phase I to proceed to Phase II.

A. Objective

The objective of the In-Vessel Inspection Before Head Removal Project is to provide an internal inspection of the reactor vessel and fuel assemblies, prior to head removal. Since the degree of damage in the TMI-II reactor is not known, it is important that information be obtained on conditions inside the reactor. This information will guide the development of programs to obtain more information on the TMI-II core damage.

B. Task Description

The entire task is divided into three phases:

(1) Conceptual Development, (2) Tooling and Systems Design, (3) Tooling fabrication, inspection equipment fabrication, and mock-up testing of all tools and equipment.

This report covers the work done in Phase II, Tooling and Systems Design. Phase I was completed September 15, 1980, with the release of the Phase I Report - B&W Document Number 86-1121208-00. The Phase I Report

B. Task Description (Con't.)

contains details of the Conceptual Development phase of the project. This Phase II report transmits designs of the concepts presented in the Phase I report. This report justifies any deviation from the procedures and tooling concepts presented in the Phase I report. Also, preliminary procedures are presented in this report.

At the end of Phase III, detailed procedures will be prepared. These procedures will be finalized after mock-up testing.

C. General Approach

The initial penetration made into the TMI-II reactor vessel will be through a vent valve thermocouple nozzle. Five of these nozzles will be opened; four for use by a reactor vessel purge system and one for the reactor vessel primary Water Level Indicator. The Purge System will provide a continuous inflow through all subsequent penetrations open to the containment. This Purge System will prevent gases and particulates from being released in the area of the inspection personnel.

Up to three control rod drive mechanisms (CRDM's) will initially be removed by normal or abnormal procedures to permit the insertion of a video camera, lighting, and sampling equipment. The locations for initial CRDM removal are shown in Figure 1.1. The most desirable situation would be if any set of three could be removed.

General Approach (Con't.)

The video camera, once placed inside the head through the CRDM nozzle, will inspect the plenum cover. A special manipulator will be used to move the camera over to the edge of the plenum cover. At suitable locations the camera will be lowered both inside and outside the plenum cylinder. This will permit video inspections of the plenum cylinder and the core support shield. The camera, while inside the plenum cylinder will be lowered to inspect the tops of several peripheral fuel assemblies. Also, the camera will be lowered down the center of the guide tube brazement to inspect the brazement and a portion of the top of one fuel assembly.

Once the peripheral inspection is complete, a center CRDM will be removed by normal (existing scope) or abnormal procedures. An inspection will be performed by lowering the camera and light down the guide tube brazement. One CRDM nozzle is needed for this inspection and any CRDM close to the center is acceptable.

This general approach is summarized in Figure 1.2. A general cross section of the reactor vessel and service structure is shown in Figure 1.3. The inspection locations are summarized in Table 1.1 and illustrated in Figure 1.4.

D. Summary

Chapter II presents the functional requirements of a Reactor Purge System. This system is designed to maintain a continuous "inflow" of air through all penetrations in the reactor vessel that are open to the containment. This system provides filters to remove particulate activity and releases gases away from inspecting personnel, thereby, avoiding the need for gland seals on inspection equipment.

D. Summary (Con't.)

Other secondary boundaries and radiological control procedures are discussed in Chapter II.

Chapter III provides a detailed design of a primary Water Level Sensing System. This system is inserted in a vent valve thermocouple nozzle and provides for both high and low water level warning. This system will provide inspection personnel with immediate warning of changes in the primary water level.

Chapter IV presents detailed designs and procedures for normal and abnormal control rod drive mechanism removal. The tools consist of cutting and lifting tools designed to remove a CRDM accounting for any difficulties encountered.

Chapter V has a detailed technical description of the video camera chosen for this project. Designs of special lighting designed to fit through a CRDM nozzle are also presented in this chapter.

Chapter VI presents designs of manipulators, which will manipulate camera and lights to the various inspection points required.

Chapter VII describes the concept for storage of radioactive equipment removed from the reactor vessel.

Chapter VIII describes the necessary mock-ups for testing inspection equipment and for testing of cutting equipment.

D. Summary (Con't.)

Chapter X contains site interface requirements.

Chapter XII presents designs of the swipe sampling equipment.

Appendix I contains a list of all drawings, and documents prepared for this project. The rest of the appendices document tests performed by B&W and presents various other material referenced in the chapters.

E. Tooling and Equipment Summary

Table 1.2 is a summary of the tools and equipment needed for this project.

TABLE 1.1

INSPECTION LOCATIONS

INSPECTION AREA	ACCESS ROUTE (See Fig. 1.4)	INFORMATION ANTICIPATED[1]
1. Plenum Cover	Any open CRDM typical of several locations; view is straight down or at an angle.	Presence, size, and distribution of debris; if debris present, it's indicative of flow paths & velocities (size & distribution) in a normally low-flow region, and potential radiation-field problems for head removal.
2. Internal Structure of Control Rod Guide Tubes	#1 & #4; typical of several locations; camera is dropped straight down. Right angle attachment is used	Presence of distortion of tube and/or release of control rod guide brazements; indicative of thermal distortion of plenum and/or temperatures > 2300°F (braze melting point); input for plenum removal task.
3. Fuel Assembly Upper Structures	#1, #3, & #4; typical of several locations. Route #4 provides access to peripheral fuel assemblies which do not contain control elements; ID.	Evidence of core "slumping", missing upper structure(s), and/or accumulations of debris above the upper structures; input indicative of flow velocities, inference of core damage severity; input for plenum removal.
4. Core Region (possible, probability uncertain)	#1, #3, & #4; available <u>only if</u> fuel assembly upper structure is found to be missing (i.e., has dropped into core).	Camera lowered into core; the only direct access route possible.
5. Internals Vent Valve	#2	Evidence of jamming or distortion of vent valve; input for plenum removal.

[1] From EDF-TCEP-116 Analysis of data is beyond B&W's current scope of supply.

TABLE 1.1 (Cont'd)

INSPECTION AREA	ACCESS ROUTE (See Fig. 1.4)	INFORMATION ANTICIPATED
6. Plenum-to-Core Support Flange	#2	Evidence of debris accumulation in flange area, inference of size and quantity of debris swept into outlet nozzles; input for plenum removal and later work on primary piping.
7. Nozzle-to-Plenum Standoffs	#2	Evidence of binding between distorted plenum and core support shield; input for plenum removal.

TABLE 1.2

TOOLING AND EQUIPMENT SUMMARY

ITEM	DESCRIPTION	QUANTITY	REPORT PAGES	SEE NOTE
1	Purge System	1	13-14	2
2	Manipulator Support Tube	3	14	2
3	Temporary Closure Plugs	3	14	2
4	CRDM Flanges	4	15	2
5	T/C Flanges (blind)	5	-	2
6	T/C Nut Rings	1	-	2
7	CRDM Bolts	8	-	2
8	CRDM Nut Rings	1	-	2
9	Flexitallic Gaskets (CRDM)	8	15	2
10	Flexitallic Gaskets (T/C)	10	-	2
11	Water Level Sensing System	1	16-18	2
12	Normal P.I. Adjustment Tool	1	21	5
13	Normal P.I. Lifting Tool	1	21	5
14	Normal CRDM Venting Tool	1	21	5
15	"0" Ring Removal Tool	1	21	5
16	Alternate Uncoupling Tool	1	21	5
17	Leadscrew Lifting Tool	1	21	5
18	CRDM Lifting Tool	1	21	5
19	Special Leadscrew Lifting Tool	1	22	5
20	Special Leadscrew Nut Tool	1	22	5
21	Contingency Bolt Removal Tool	1	23	2
22	Contingency Stator Removal Tool	1	24	2
23	Plasma Arc Cutting System	1	19,25	2
24	Push/Pull Leadscrew Separator	1	25	2
25	Leadscrew Support Clamp	1	26	2
26	Leadscrew Holding Tool	1	26	2
27	Leadscrew Lowering Tool	1	27	2
28	Under Missile Shield Hoist	1	30	2
29	Extra Video Camera	1	40,47	2
30	Spare Parts for Camera	Table 5.1	40,47	2
31	Video Recorder	2	41,48	3
32	Video Monitor	2	41,48	4
33	Small Underwater Light	2	43,48	2
34	Large In-Head Light	2	43,48	2
35	Murky Water Deployment System	1	44	2
36	Manipulator	2	49,52	2
37	Fuel Swipe Sample Tool	1	62	6
38	Plenum Swipe Sample Tool	1	63	2
39	Mock-Up	1	57	2
40	In-Head Plasma Arc System	1	20	2
41	Radioactive Equipment Storage Racks	1	55	2
42	Lighting (outside head)	-	58	2
43	Blind Flange Replacement Tool	1	-	2
44	Lifting equipment for Equipment Ingress	1	-	2
45	Spring Scales	As Required	-	2

[2] This equipment is currently under the Phase III scope of supply.

[3] This equipment can be provided on a rental basis, however, new equipment procurement is recommended.

[4] This equipment can be furnished on a rental basis.

[5] This equipment is a recommended addition to the Phase III scope of supply.

[6] Deleted from Phase III scope of supply.

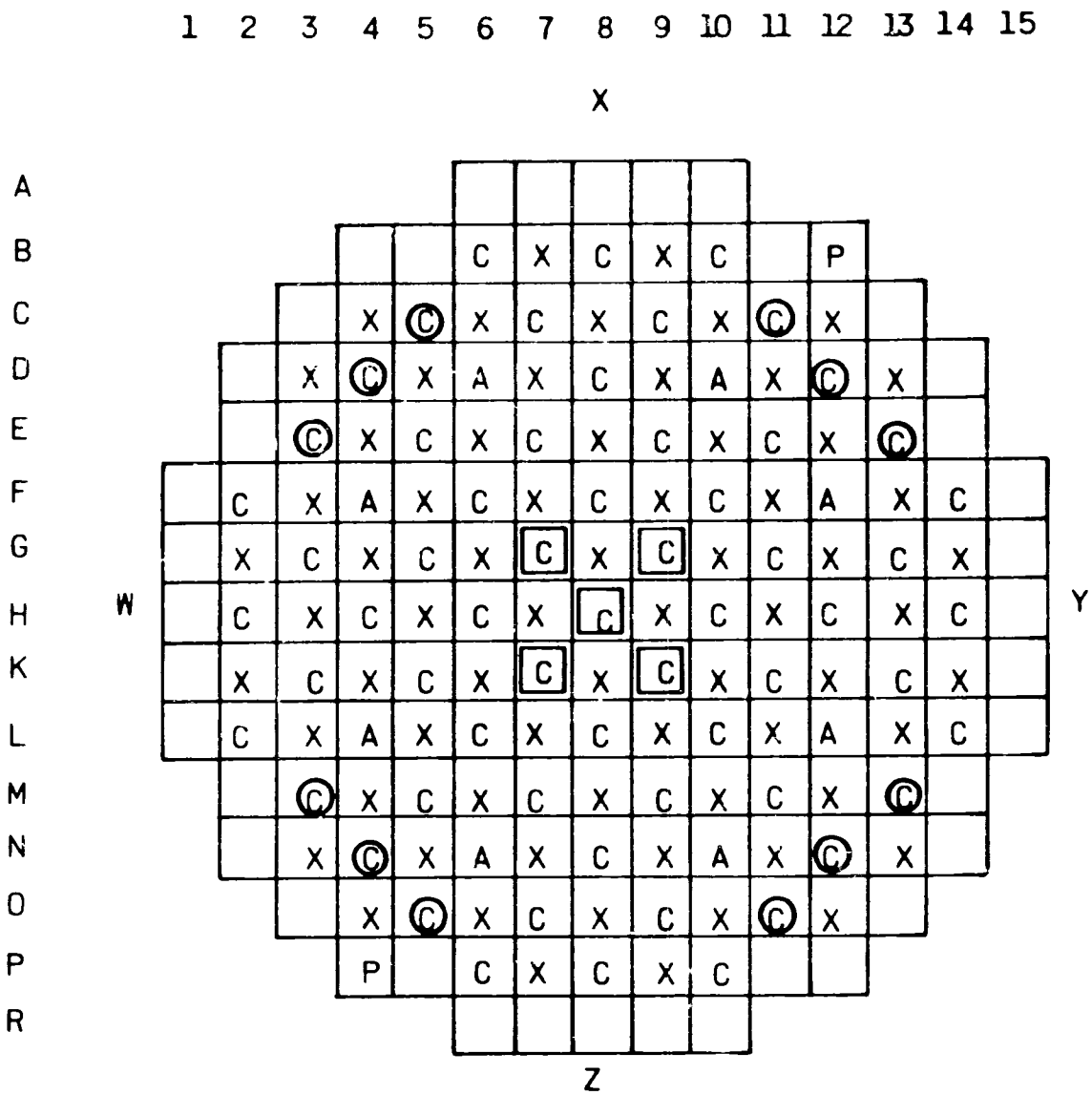

CONTAINS NO CONTROL COMPONENT

C — CONTROL ROD ASSEMBLIES

A — AXIAL POWER SHAPING ROD ASSEMBLIES

X — BURNABLE POISON ROD ASSEMBLIES

P — PRIMARY NEUTRON SOURCES

Ⓒ — DESIRABLE LOCATIONS FOR INITIAL CRDM REMOVAL

[C] — DESIRABLE LOCATIONS FOR CENTER CRDM REMOVAL

Figure 1-1 LOCATION OF CONTROL ASSEMBLIES

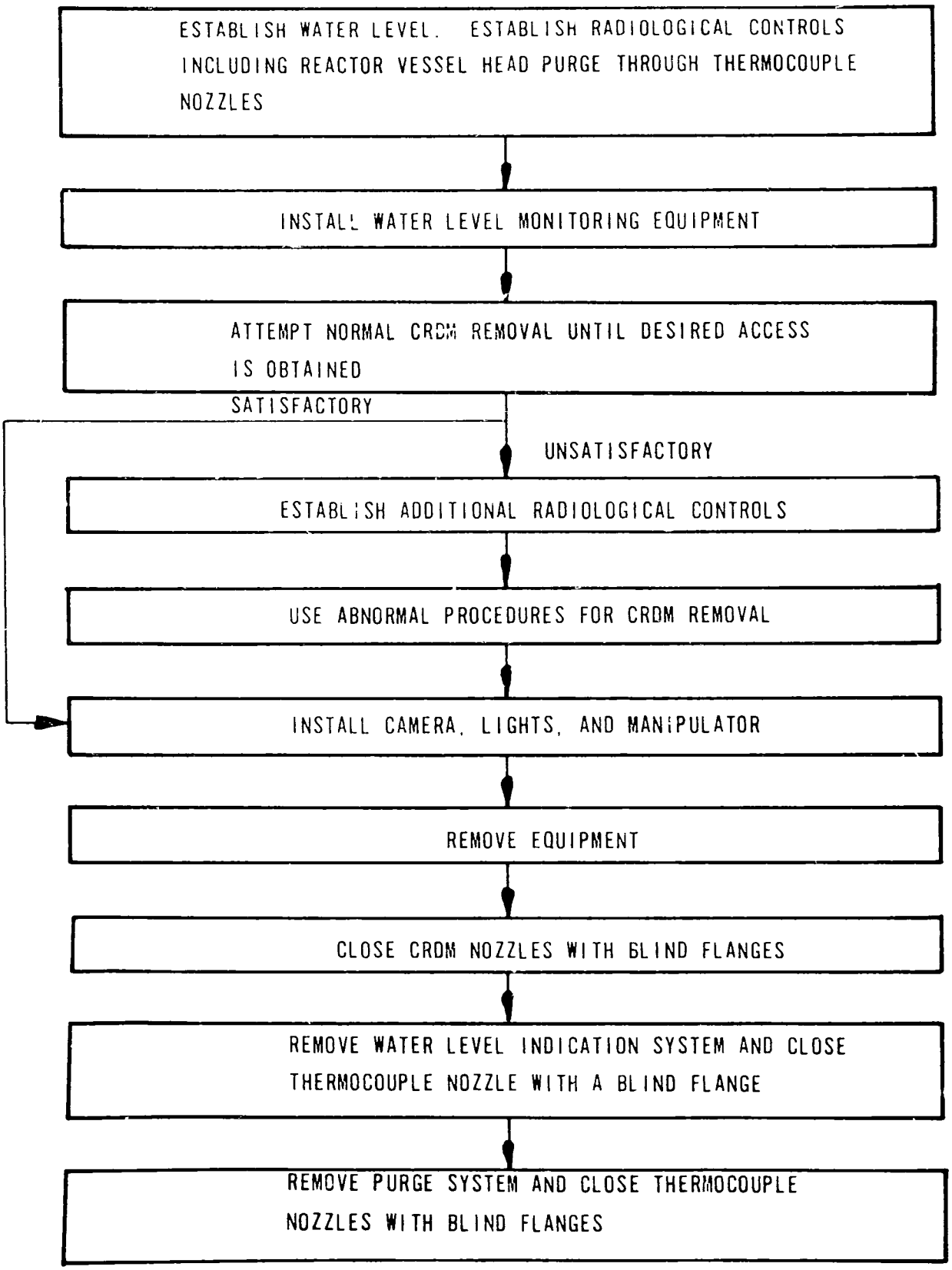

Figure 1.2 GENERAL APPROACH

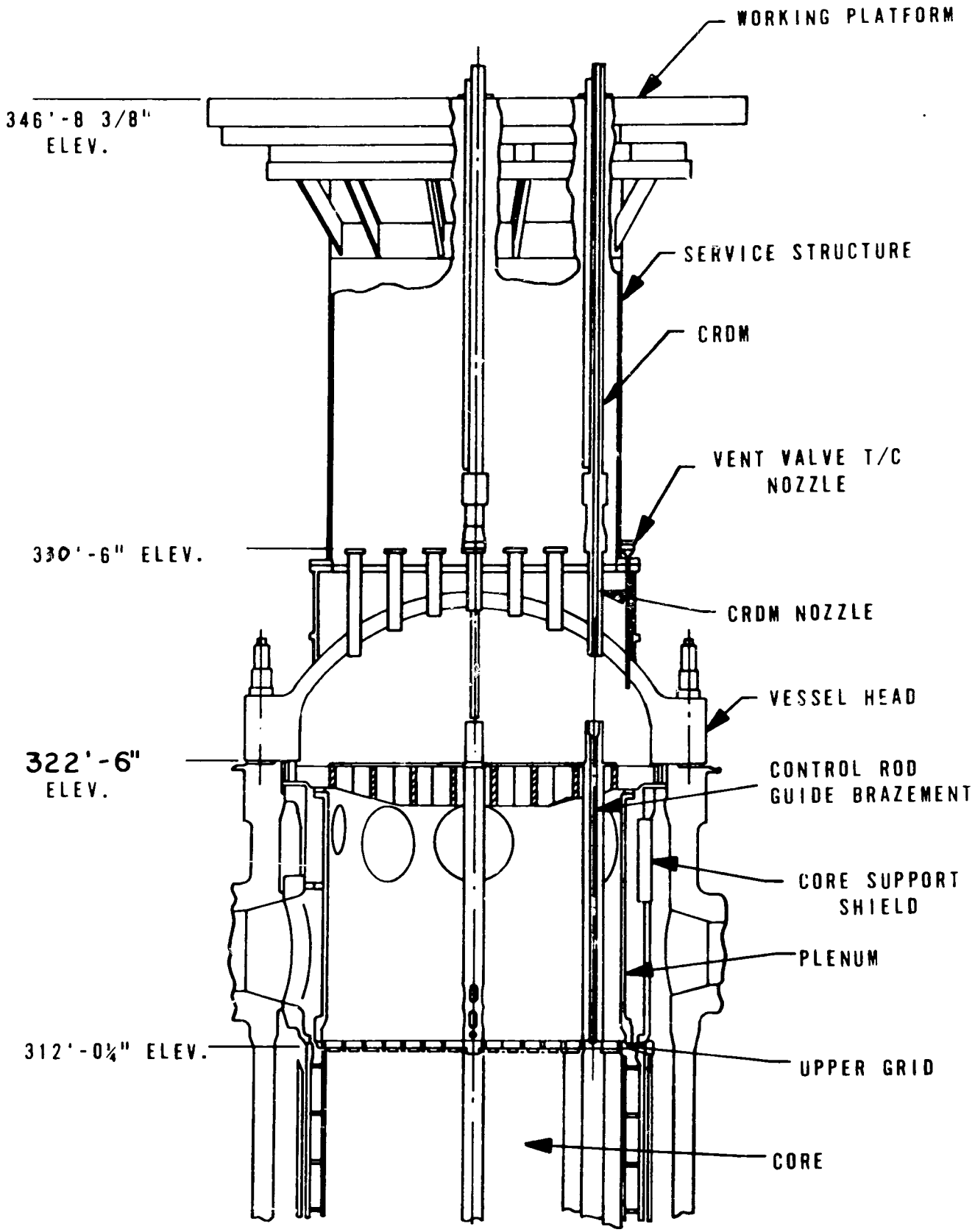

FIGURE 1.3 - REACTOR AND SERVICE STRUCTURE

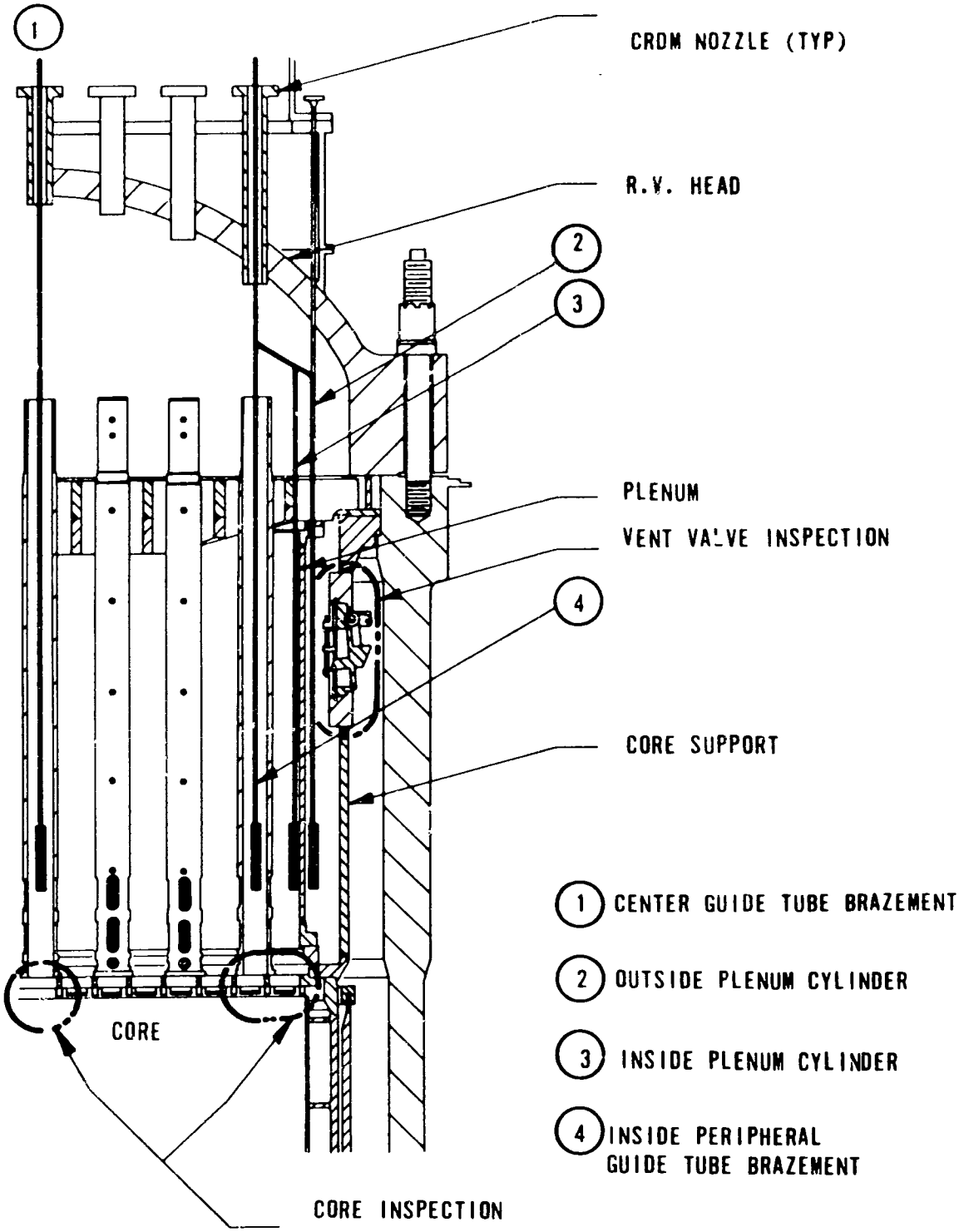

Figure 1.4 INSPECTION LOCATIONS

II. RADIOLOGICAL BOUNDARIES

A. Purge System

The reactor vessel Purge System has the following functional requirements:

1. Maintain a continuous air inflow through all reactor vessel penetrations that are directly open to the containment in the event that a previously intact fuel assembly is ruptured during the CRDM removal or inspection work. Twice the average fuel assembly gas inventory is to be assumed to account for the highest fuel assembly burn up. The system shall be capable of maintaining air inflow at velocity sufficient to assure no gases diffuse out through the open penetrations during all anticipated operations involving openings in the head (e.g., removal of CRDM top closure, separation of a CRDM from the nozzle flange, removal of a CRDM, etc.). The system shall also accommodate anticipated plasma-arc gases during in-head cutting. Filtration and moisture removal provisions are not included.

2. The system shall consist of two 100 percent capacity blowers; the blowers shall be of non-sparking construction.

3. All system components shall be of explosion proof construction (i.e., NEMA enclosures on electrical connections, totally enclosed motors, etc).

4. The intake piping/duct shall connect to no more than seven thermocouple nozzles. All connections shall be headered to provide one flanged connection at the blower skid interface. Mating flange materials shall be compatible. Flange accessories (e.g., bolts, nuts, and gasket) shall be provided.

5. The blowers shall be mounted so as to facilitate removal, including quick disconnect type plugs for power supplies. Blower inlet and exhaust connections shall be flanged. All flange accessories shall be provided.

6. The system shall have provisions for isolating and disconnecting each blower independently. The blowers, blower controls, and associated piping/duct and dampers shall be skid mounted.

7. The blower skid dimensions shall be limited to 2 ft. x 3 ft. The skid shall be of rigid construction. Lifting lugs shall be provided. The blower skid will be located on top of the service structure.

8. One flanged exhaust connection shall be provided at the skid outlet. Flange accessories shall be provided. Static or total pressure at the exhaust connection, at design flow, shall be specified.

9. Polyvinyl Chloride (PVC) shall not be used for any system application.

10. All equipment shall be of commercial grade quality.

11. The System should be constructed in such a manner that assembly inside the reactor building is minimized.

12. No component or skid should weigh over approximately 150 lbs.

13. All components and skids must pass through the personnel air lock.

14. A method to control the head vacuum should be available.

A redesign of the Purge System is underway and this design will be submitted separately for review.

B. Other Radiological Boundaries

1. Manipulator Support Tube

This device shown in B&W Drawing Number 1121424E replaces each CRDM once the CRDM is removed. This manipulator support tube acts as a guide tube for the manipulator and serves as a radiological boundary since it lengthens the distance that particles must travel (against the direction of airflow caused by the Purge System) to escape the reactor vessel. This tube can be sealed when not in use.

2. Temporary Penetration Closures

This device is an expandable plug that forms a temporary seal at the top of the manipulator support tube. This plus will prevent gases and particulates from escaping and help prevent tools and other items from being dropped into the vessel. This device is not intended as a pressure boundary.

3. Permanent Closure

The final closure used on the reactor vessel upon completion of the inspection task will be blind flanges (B&W Drawing Numbers 1123010D and 1123011C).

III. PRIMARY WATER LEVEL SENSING SYSTEM

During the reactor internal inspection, the primary water level is critical and it is important for the video inspection team to monitor this level. A [illegible] in the water level could result in a loss of shielding between the inspection personnel and the reactor core. Also, a rise in the water level could render the Purge System inoperative as well as lead to the spillage of the primary coolant. If the inspection team has immediate warning of changes in the water level, the personnel on the service structure can be evacuated until plant operations stabilize the water level.

The water level indicator to be used is commonly referred to as the "Bubbler System". The Bubbler System is constructed by placing a pipe, which is open on both ends, in the water. A constant flow gas source is attached to the top of the pipe. This gas forces the water out of the pipe, and releases gas bubbles out of the bottom of the pipe. A correlation can be made between the pressure necessary to reach the point of equilibrium (point where bubbles escape out of the bottom of the tube) and the water level. The pressure in the pipe is proportional to the difference in the water level and the level of the bottom of the pipe. Hence, the water level can be directly indicated by a pressure gauge. Further, since the gas flow rate is slow, there is essentially no pressure drop in the pipe and the pressure gauge may be placed on the top of the pipe. Also, high and low pressure alarms will be installed on the top of the pipe. The system is shown in B&W Drawing Number 1121396D.

A. System Requirements

1. An air bubbler system shall be provided for monitoring water level in the reactor vessel during all pre-head lift examination activities. Access to the vessel shall be obtained through a thermocouple nozzle located on the reactor vessel head. The system shall be capable of

monitoring water level from the bottom of the thermocouple nozzle to at least the top of the plenum.

2. A reference leg for the air bubbler shall be used. The mating flange for the thermocouple nozzle flange shall have provisions for both the reference and the sensing legs. The reference leg shall terminate after penetrating through the mating flange, and the sensing leg shall extend through the thermocouple nozzle to the proper depth. The tubing shall be 316L stainless steel. The end of the sensing leg shall be V-notched to ensure smaller pressure fluctuations.

3. Dry, oil-free instrument quality air shall be supplied to the system at a pressure of 20 psig. Air and air supply tubing shall be provided by others.

4. A purge flow controller with rotameter shall be provided for the sensing leg.

5. A panel, suitable for mounting on the railing of the service structure, shall be provided with the following devices:

   a. Differential pressure indicator for water level indication.
   b. Differential pressure switches for high and lower level alarms (set points to be determined by B&W).
   c. Flashing red light for local level alarm (actuated by item b on high or low level). 120 vac will be supplied by others.
   d. Purge rotameter assemblies.
   e. Electronic differential pressure transmitter calibrated for the same range as item a. Output shall be 10-50 ma DC. It shall be provided with a junction box for field terminations. Power supply remote

indication and interconnecting cable will be supplied by others.

Item b shall be provided with additional contacts for actuating a remote alarm (supplied by others). The contacts shall open in the alarm state.

6. Isolation and calibration valves shall be provided at the panel for each instrument. In addition, valves which permit the introduction of higher pressure air to remove an obstruction in the bubbler shall be provided.

7. The tubing from the mating flange to the panel may be flexible tubing (tygon, nylon, etc.) provided that it is 1) securely restrained, 2) radiation resistant, and 3) capable of withstanding the higher pressure air required to remove an obstruction.

8. This system shall contain no PVC.

9. All components shall be of commercial grade quality.

IV. CRDM REMOVAL

A. Deviations From Procedures Presented In Phase I

The original approach for destructive CRDM removal was discussed in the August 7, 1980 meeting and is shown in Figures 1.2-1 and 1.2-3 of the Phase I Report. This procedure has changed substantially during Phase II.

These changes are:

1. Cutting techniques - Originally saws and abrasive cutters were proposed for motor tube and leadscrew cutting. These methods have not proven feasible during Phase II. Plasma arc cutting systems have proven to be an acceptable way to make the required cuts. Hence, the plasma arc is now the proposed method to make all required cuts.

2. Destructive CRDM Removal Procedures - The Phase I Report presents destructive CRDM removal procedures, which involve CRDM motor tube cutting. During Phase II a procedure was developed, which would cause a small separation between the CRDM motor tube and the CRDM nozzle of a coupled drive without withdrawing the control rods beyond the tripped position. This separation will be large enough to insert the plasma torch and cut the leadscrew and the leadscrew support. This will permit CRDM removal without motor tube cutting even in the event the leadscrew coupling is fused to the control rod hub. Since this procedure is faster, will reduce personnel exposure, and does not require motor tube cutting, it has replaced the originally proposed destructive CRDM removal procedure.

3. In Head Leadscrew Cutter - Also proposed in the Phase I Report (Figure 2.3-12 of the Phase I Report) was an in-head leadscrew cutter. This tool would have used a hydraulic shear or saw action to cut the leadscrew. This has not proven to be a practical option in Phase II testing and it has been dropped as an option. The plasma arc system has the capability to cut the leadscrew from an adjacent CRDM nozzle. A conceptual sketch of this plasma arc in-head leadscrew cutter is shown in B&W Sketch Number SKTDP103180. Note that prior to the in-head cutting, the leadscrew must be captured below the cut location to prevent the leadscrew and control rod from dropping (in the event the fuel assembly is missing). To capture the leadscrew holding tool, conceptually shown in Figure 4.1, will be inserted from an adjacent CRDM nozzle with a special manipulator (also shown in Figure 4.1). The manipulator will be removed after the holding tool is in place to allow access for the plasma tool.

4. Leadscrew Pin Torque Shearing Option -
Although this procedure was not presented in the Phase I Report, it was discussed at the August 7, 1980 meeting as a possible abnormal leadscrew separation procedure. Tests, documented in Appendix II, indicate that this procedure will not work since the control rod spider/hub connection will fail before the pins in the leadscrew.

A flowchart of the revised contingency plan for CRDM removal is shown in Figure 4.2.

B. Normal CRDM Removal Procedures and Tooling

The normal CRDM removal procedures and tooling are described in the CRDM Manual, B&W Instruction Book Number 620-0006-01-0018-03. Minor modifications to the procedures (such as a step to verify the weight of the torque tube will be necessary as it is lowered. The normal tooling is available inside the TMI-II reactor building and there is no reason to believe that these tools cannot be made to function. However, these tools were in the reactor building on March 28, 1979, and they may require decontamination before use. Since this could cause delays and unnecessary personnel exposure, it is recommended that back-up tools be available. Hence, B&W recommends that replacements for the following normal tools be added to the current scope of supply (if these tools cannot be supplied by the site):

1. Position Indicator (P.I.) Adjustment Tool. Note: In order that this tool be capable of passing through the personnel hatch, it will not be completely assembled until after being taken into the reactor building.
2. P.I. Lifting Tool
3. CRDM Venting Tool
4. "O" Ring Removal Tool
5. Alternate Uncoupling Tool with Jumping Jack
6. Leadscrew Lifting Tool
7. CRDM Lifting Tool

B. Normal CRDM Removal Procedures and Tooling (Con't.)

It should be noted that the Stator Installation/Removal Tool and the Holddown Bolt Removal Tool are not included in this list. The currently proposed contingency tooling can (in the event that the tools inside the reactor building will not work) perform the function of those two tools even for normal CRDM removal procedures. Also, not included in the recommended replacement list is the Leadscrew Installation/Removal Tool. This tool will not pass through the personnel hatch and no currently proposed contingency tool will perform the function of this tool (ie. back the leadscrew nut off, uncouple the leadscrew, and raise the leadscrew to the parked position).

B&W can provide two tools to take the place of the leadscrew installation removal tool. The first tool, conceptually shown in Figure 4.3, will back the leadscrew nut off and the second tool, conceptually shown in Figure 4.4 will uncouple and raise the leadscrew to the parked position. It should be noted that the special leadscrew lifting tool can be inserted down the hollow shaft of the special leadscrew nut tool to prevent the premature rotation of the leadscrew to the uncoupled position while the leadscrew nut is being backed off. Since these two tools are only required if back-up normal CRDM tools are added to the scope of supply, only conceptual designs have been prepared.

Also needed is a special tool to lower a blind flange onto inaccessible CRDM nozzle flanges. B&W will supply this tool under the current scope of supply. (See B&W Drawing No. 1123010D).

C. Contingency Tooling

Standard tooling and procedures for leadscrew uncoupling and CRDM removal may prove to be inadequate due to conditions imposed during the transient. Possible complicating conditions considered are:

1. Corrosion of bolts and fittings.
2. Melting/fusing of leadscrew to the control rod spider.
3. Warpage of leadscrew of CRDM due to thermal stresses.
4. Melting or warpage of the guide tube brazements.

It has been estimated that the leadscrews in the peripheral CRDM's experience a minimum of 1500°F for a period of approximately one hour before being quenched.[1] Although this by itself would not have significantly changed the metallurgical properties of any of the key components, it could have been sufficient to cause degree of warpage. If the temperature reached as high as 2100°F, the rod guide braze material could have begun to melt. It is possible that the male coupling on the end of the leadscrew assembly was damaged and will not uncouple from the spider. Some degradation of both components is expected due to the transient and subsequent environment.

Contingency tooling has been designed to permit CRDM removal despite problems which may be encountered. Specifically these tools are: CRDM Holddown Bolt Removal Tool, Stator Removal Tool, Plasma Arc Cutting System, a Leadscrew Support Clamp, and a Leadscrew Lowering Tool.

1. CRDM Holddown Bolt Removal Tool -
   The functional requirements of this tool are:

---

[1] Based on data from TMI-II Reactor Coolant System Component Evaluation Task 27, May, 1980.

- Produce 2500 ft.-lbs. of torque with a 1.5 safety factor. The 2500 ft.-lbs. figure is the worst case estimate of the force necessary to smear the threads and remove the holddown bolts. This number is based on B&W field experience.

- Meet all geometric restrictions imposed by the CRDM's and service structure.

- Pass through personnel hatch.

- Function below missile shield.

The tool shown in B&W Drawing Number 1121446F meets all of these requirements. This tool employs two torque multipliers to yield a mechanical advantage of 12.

2. Stator Removal Tool

The functional requirements of this tool are:

- Be capable of lifting 1000 lbs. (4 times the weight of the stator) with a 1.5 safety factor.

- Meet all of the geometric restrictions imposed by the CRDM's and service structure.

- Function below missile shield.

- Pass through personnel hatch.

The tool shown in B&W Drawing Number 1121432F meets all of these requirements. This tool can be maneuvered below the stator and then a crane or hoist can be used to lift the stator.

3. Plasma Arc Cutting System

The functional requirements of this tool are:

- Cut up to 1½ inch thick 17-4 PH stainless steel.
- Torch head must be small enough to fit between the CRDM flange separation of 1-1/2".
- Must make required cut in just a few seconds.
- Must be portable.
- Must operate off 480 v, 3 phase circuit.

Typical plasma arc cutting systems meet these requirements. Available systems use nitrogen or argon mixed with hydrogen to form the plasma gas. This gas is heated to its plasma state by an electrical arc, forming a plasma arc. The arc is contained by a secondary fluid, usually carbon dioxide or water. The gases needed can be brought into the reactor building, in tanks, through the personnel hatch and the power requirements for this system will be 100 amps at 480 volts (3 phase). The successful testing of the plasma arc system is documented in Appendix III.

4. Push/Pull Leadscrew/Extension Separator

This tool has the following functional requirements:

- Fit around leadscrew and inside control rod guide brazement.
- Function under all geometric restrictions imposed by other CRDM's and the service structure.
- Generate 25 tons of force with a 1.5 safety factor necessary to separate the leadscrew from its extensions. This figure is calculated in Document Number 32-1122117.

- Prevent control rod out-motion.
- Function below missile shield.
- Pass through personnel hatch.

The tool shown in B&W Drawing Numbers 1121399F and 1121400E meets all of these requirements. This tool used a hollow tube to fit around the leadscrew and inside the brazement. A segmented nut is used to apply upward force on the leadscrew, while the tube prevents the control rod spider from rising. Strength tests of critical components were performed during tool design to verify calculations. Test results are presented in Appendix IV and V.

5. Leadscrew Support Clamp
This tool will be a chain wrench or "C" type clamp. Its function is to prevent the leadscrew support tube from dropping inside the vessel while cutting the leadscrew and leadscrew support between CRDM flanges. Standard chain wrenches and "C" clamps will be evaluated during Phase III mock-up testing. If standard tools do not prove acceptable a special tool will be designed.

6. Leadscrew Holding Tool
This tool will be used to hold the leadscrew in the event the fuel assembly upper end fitting is missing. There are two options which will be evaluated during Phase III testing before the design of this tool will be finalized. The first option (conceptually shown in Figure 4.5) is to cut a "window" in the leadscrew support tube and insert a special clamping tool. The second option would consist of "punching" a hole (with the plasma arc system) through the leadscrew and leadscrew support tube without supporting the leadscrew. A "pin" could then be inserted to

6. Leadscrew Holding Tool (Con't.)
hold the leadscrew. This concept is illustrated in Figure 4.6. Other options will also be tested and evaluated during Phase III.

7. Leadscrew Lowering Tool -

A tool will be necessary to provide controlled descent of the leadscrew if the fuel assembly is missing. If the "punch" method is used, this tool will simply be a wire rope which is inserted through a groove in the holding tool. If the window method is used, a special tool (conceptually shown in Figure 4.7) will be needed.

D. Contingency CRDM Removal Procedure

Prerequisites:

1. Lower primary water level.
2. Establish purge system.
3. Establish primary water level monitoring.
4. Provide an acceptable hoist.
5. Vent CRDM.
6. Remove P.I. and stator.
7. Top closure and "o" ring removed.
8. Normal uncoupling procedures attempted.

Procedure:

1. Using the plasma arc torch, cut a hole in the service structure adjacent to the CRDM being removed.
2. If required, back the leadscrew nut off to the hard stop.
3. If required, release the torque tube using the alternate uncoupling tool with jumping jack.
4. Using the alternate uncoupling tool and spring scale, raise the torque tube. If the spring scale reading substantially exceeds the combined weight of torque tube and alternate uncoupling tool, the precautionary procedures presented in Step 9 must be followed to prevent uncontrolled leadscrew descent.

D. Contingency CRDM Removal Procedure (Con't.)

Note: Step 4 verifies that the weight of the leadscrew and control rod assembly is being supported by something other than the torque tube.

5. Unbolt the CRDM. Force bolts if necessary.

6. Lift the CRDM approximately 1" with the chain hoist.

Note: Precautionary steps must be taken to prevent raising the CRDM high enough to cause control rod withdrawal beyond the tripped position.

7. Continue raising the CRDM until there is a sufficient gap between the CRDM flanges for the cutting operation. Do not raise the CRDM enough to cause control rod withdrawal beyond the tripped position.

8. Clamp the leadscrew support tube in place using a clamping tool. Position the tool flush with the CRDM nozzle.

9. If during Step 4 it was possible to verify that the torque tube was not supporting the weight of the leadscrew, cut the leadscrew and leadscrew support tube between the leadscrew clamping tool and the CRDM motor tube flange, then proceed to Step 14. If it was not possible to verify that the leadscrew was supported, follow Steps 10-13.

10. Using the plasma torch, cut the leadscrew support tube. Cut as much of the exposed tube away as possible. Do not cut the leadscrew.

11. Attach the leadscrew holding tool to the exposed. leadscrew.

12. Cut the leadscrew above the holding tool and below the CRDM motor tube flange. Provide suitable protection for CRDM nozzle flange.

13. Attach the leadscrew lowering tool and remove the holding tool. Carefully, at a slow rate, lower the leadscrew until it reaches a hard stop.

Contingency CRDM Removal Procedure (Con't.)

14. Using the push/pull tool, separate and remove the lead-screw.

This procedure applies only to CRDM's where the side of the CRDM is accessible. Initially, this procedure applies only to peripheral CRDM's. A center CRDM can, however, be removed by first removing a peripheral drive and then removing a drive one row in from the peripheral drive, using the side access provided by the first drive removal. Continuing inward, one row at a time will eventually permit the necessary side access for abnormal removal of a center drive. However, as each drive is removed a closure will be required for the CRDM nozzle. A total of four closures will be provided under the current scope of supply.

E. Axial Power Shaping Control Rod (APSR) Drive Mechanism Removal

The APSR's are in the same position as they were prior to the reactor trip on March 28, 1979. The normal uncoupling procedure will cause the APSR's to drop, resulting in the APSR's impacting the fuel assemblies. Since the condition of the core is unknown, it is impossible to evaluate the consequences of this impact.

There are three procedures, which use the contingency tooling presented in this chapter, that will permit the uncoupling of the APSR drive without dropping the APSR. These are as follows:

1. In Head Cutting - This procedure will use the in-head plasma cutter and the in-head holding tool to remove the drive without dropping the APSR. This method would involve only a small APSR movement (if any) and will use the same procedure as CRDM removal with in-head plasma.

Axial Power Shaping Control Rod (APSR) Drive Mechanism Removal (Con't)

2. Leadscrew and Support Cutting - This method would be to unbolt the APSR drive, raise the drive a few inches to expose the leadscrew and support tube, and perform Steps 10-13 of the contingency CRDM removal procedure. This procedure will involve both in and out motion of the APSR.

3. Motor Tube Cutting - This method would be similar to the leadscrew and support tube method except that the leadscrew will be exposed by cutting a window in the motor tube.

Although mock-up testing is necessary to resolve which procedure is recommended, the in-head plasma method is believed to be the preferred approach and the motor tube cutting is believed to be the least desired technique.

The removal of APSR's will involve additional closures not under the current scope of supply. A flow chart for APSR removal is shown in Figure 4.8.

F. Operation With Missile Shields In Place

All tooling designed under Phase II can be used for the inspection under the missile shields. The normal CRDM tooling, which is required in support of the inspection can also be operated under the missile shields. However, an auxiliary lifting hoist or rigging will be necessary for various operations during the inspection procedures. This auxiliary hoist or rigging must be located under the missile shields and allow transport of components to an appropriate laydown area, such as the canal floor. B&W will design, fabricate, and test this lifting equipment (expanded scope of supply) during Phase III.

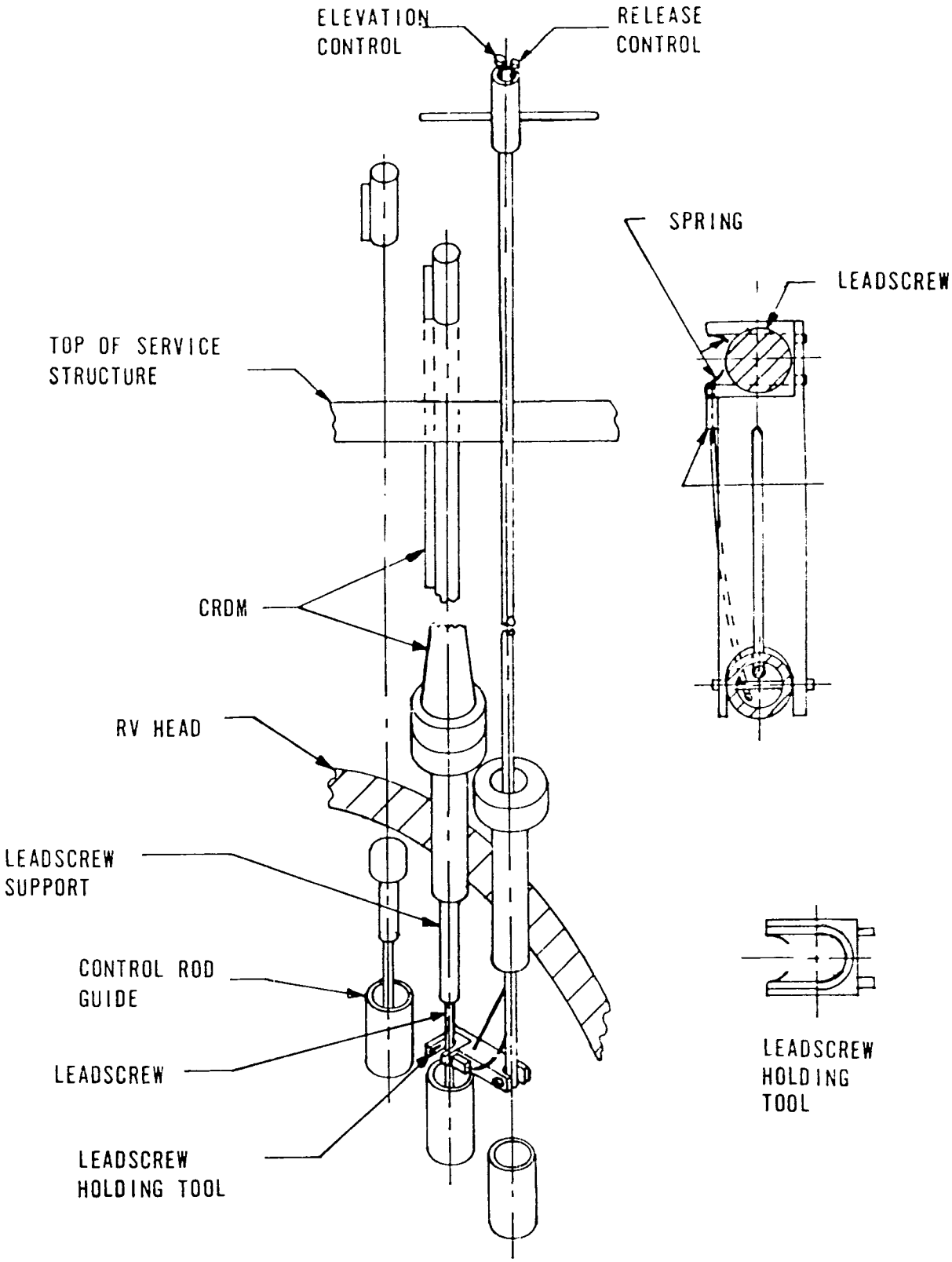

Figure 4.1 IN-HEAD LEADSCREW HOLDING TOOL AND MANIPULATOR

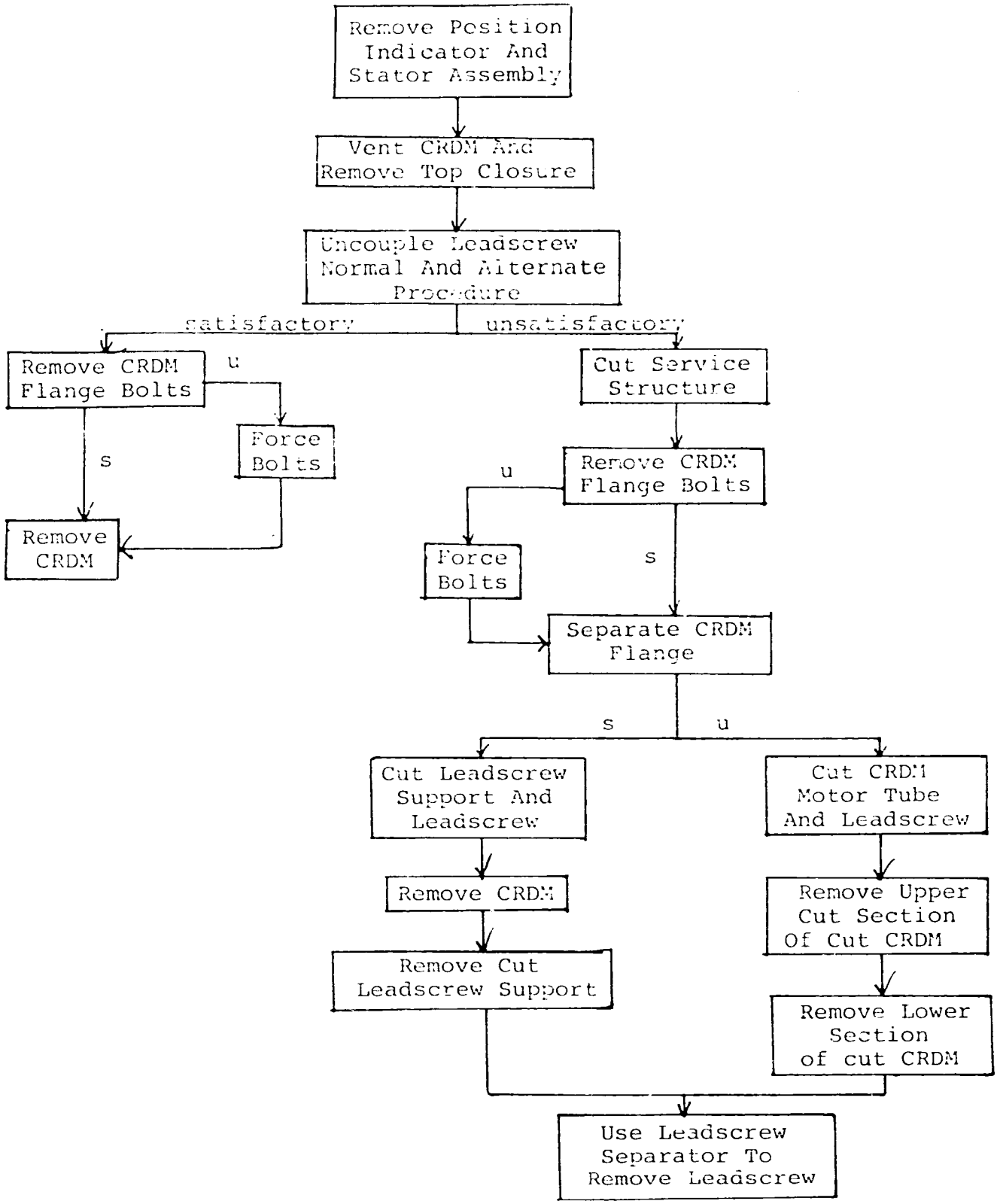

FIGURE 4.2 CRDM Removal

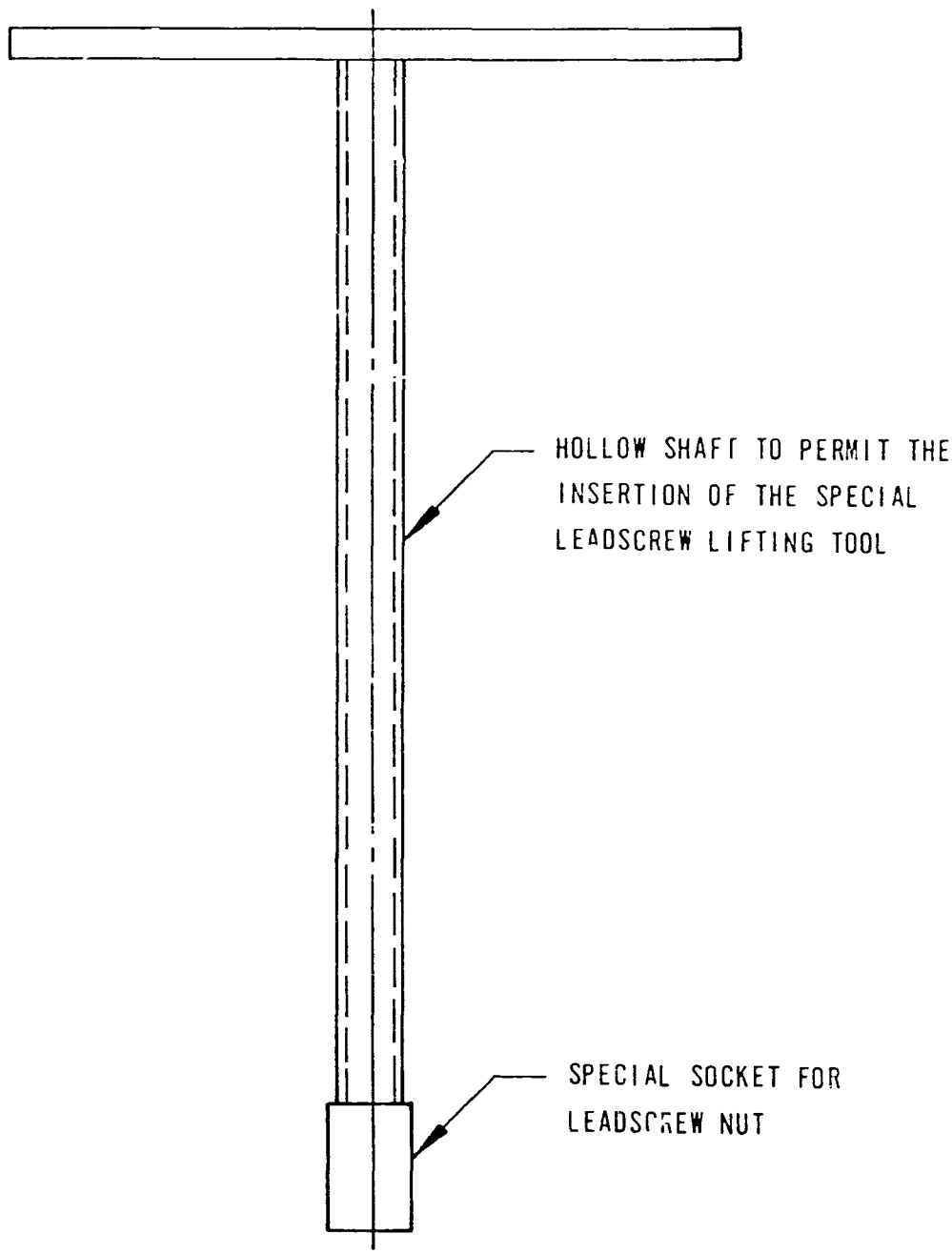

Figure 4.3 SPECIAL LEADSCREW NUT TOOL

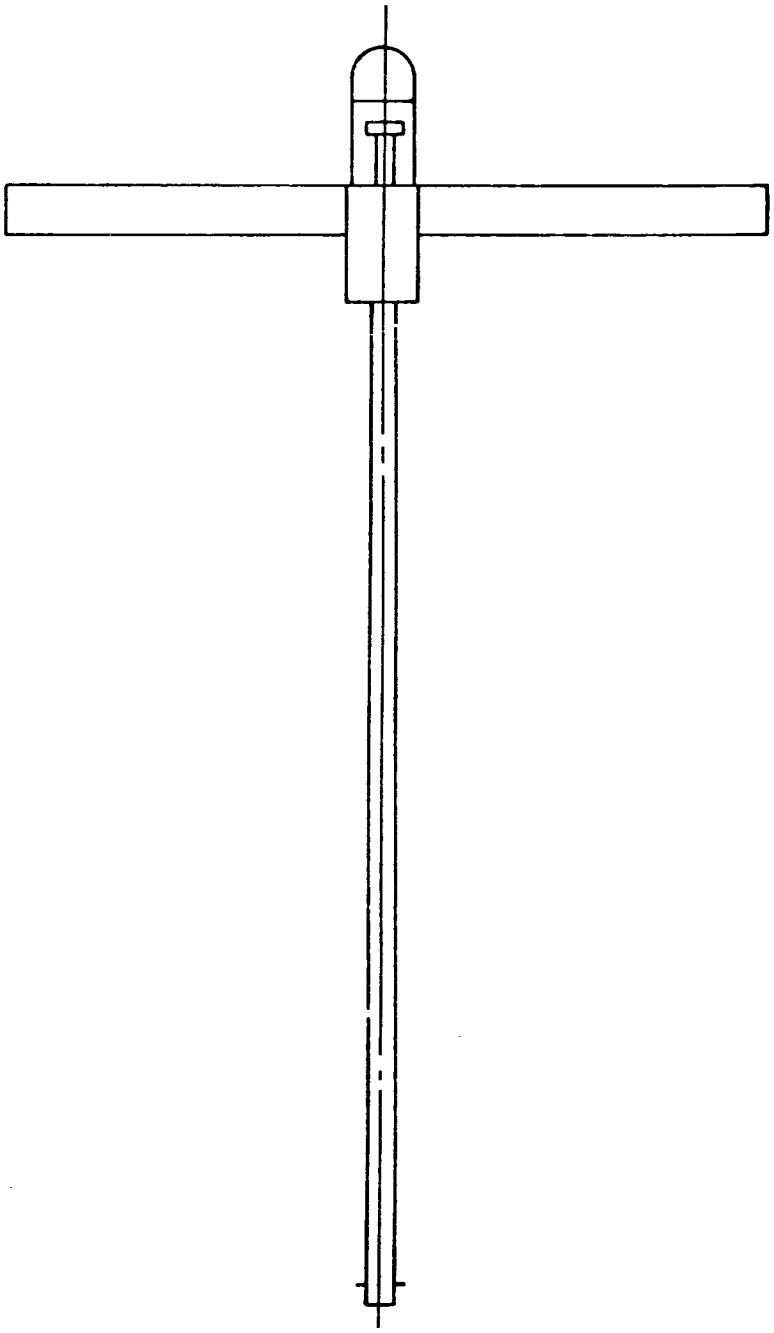

Figure 4.4 SPECIAL LEADSCREW LIFTING TOOL

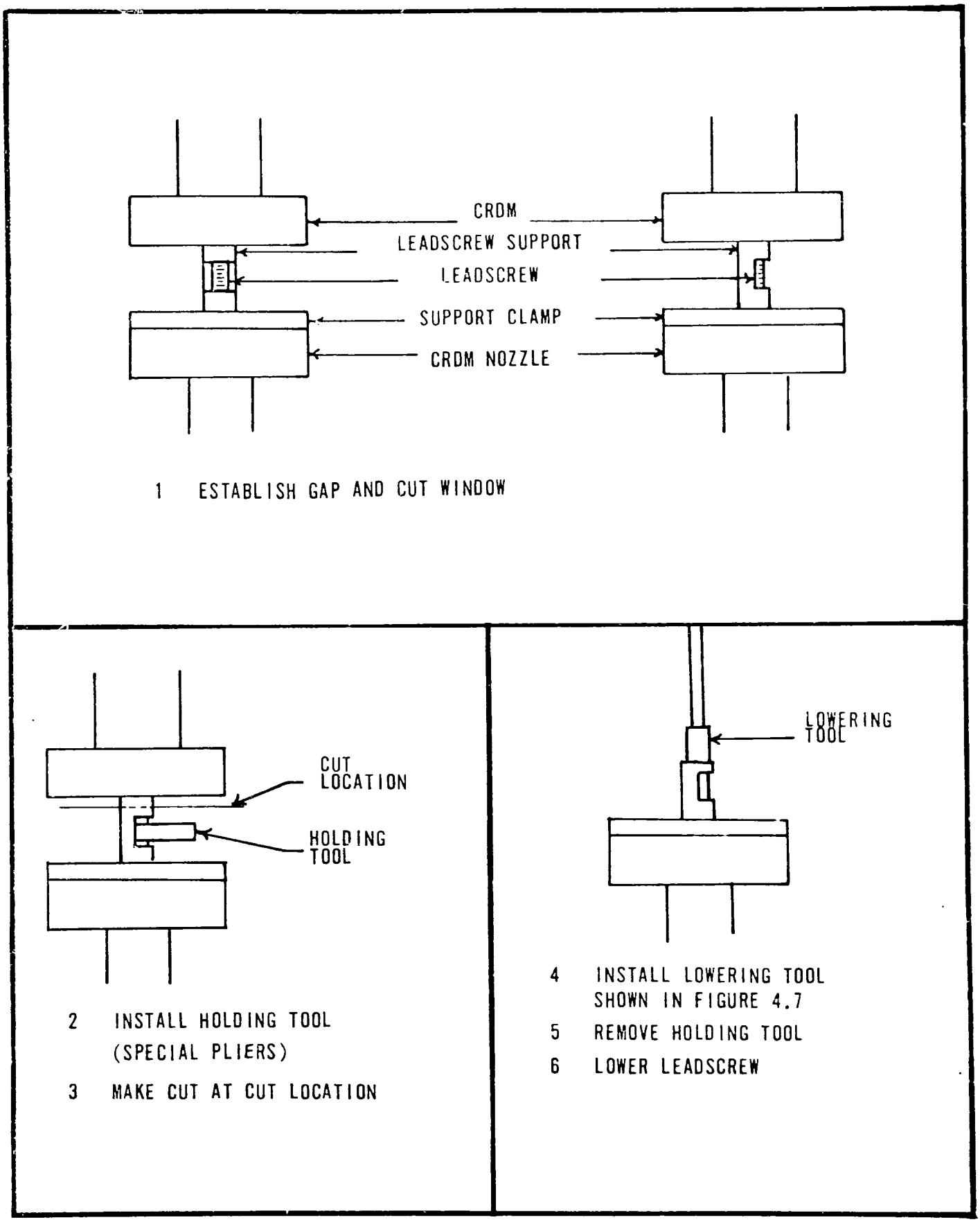

FIGURE 4.5 "WINDOW" METHOD

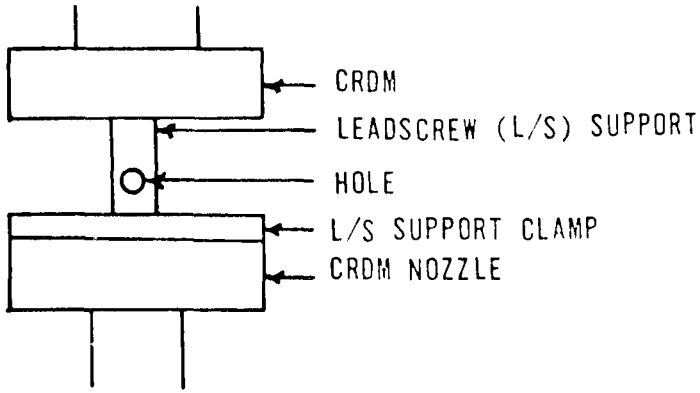

1 ESTABLISH GAP

2 INSTALL L/S SUPPORT CLAMP

3 PUNCH HOLE THROUGH L/S AND L/S SUPPORT TUBE

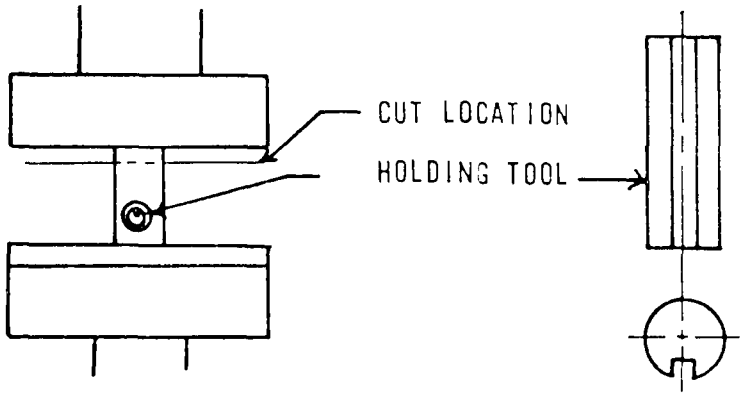

4 INSERT HOLDING DEVICE

5 CUT L/S AND L/S SUPPORT TUBE AT CUT LOCATION

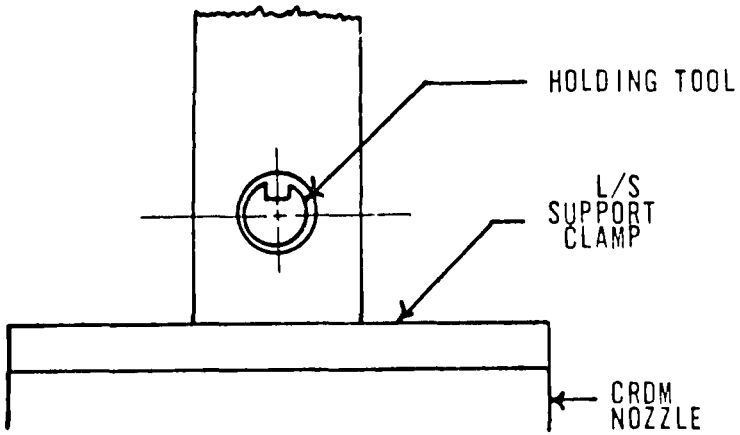

6. CUT AWAY L/S SUPPORT TUBE ABOVE HOLDING TOOL CENTER LINE

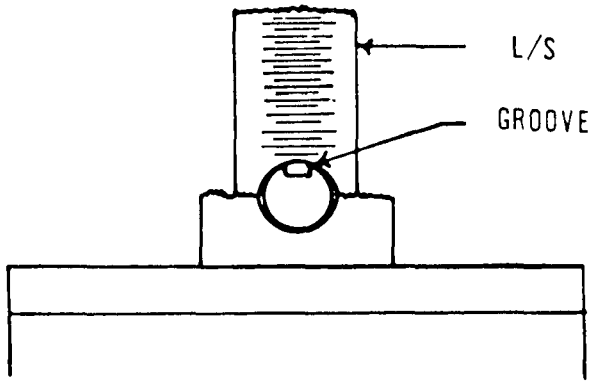

7 LOOP WIRE ROPE THROUGH THE GROOVE IN THE HOLDING TOOL

8 REMOVE HOLDING TOOL AND LOWER L/S WITH WIRE ROPE

FIGURE 4.6 PUNCH METHOD

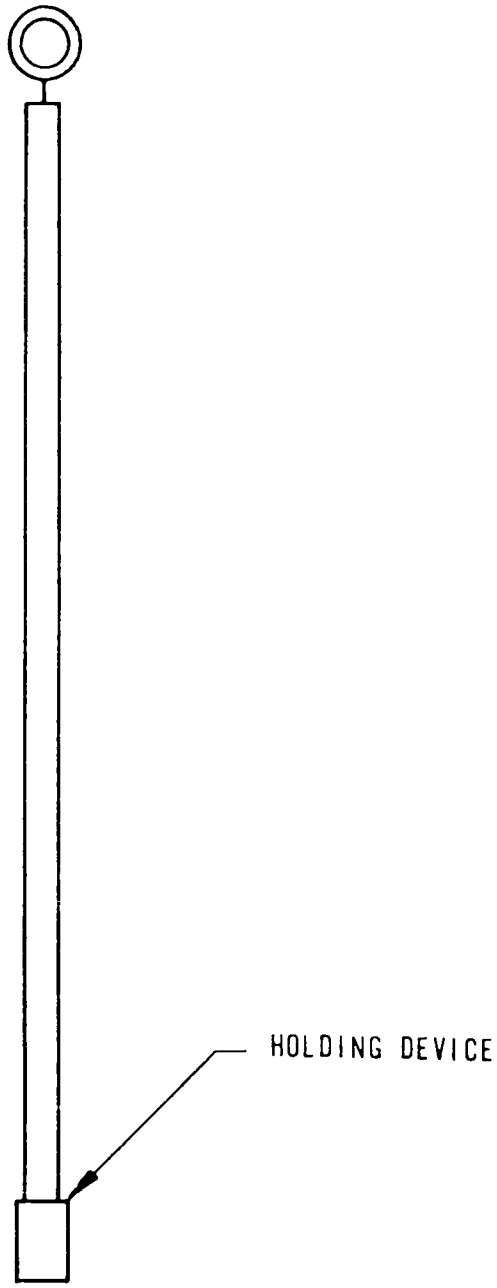

Figure 4.7 LEADSCREW LOWERING TOOL

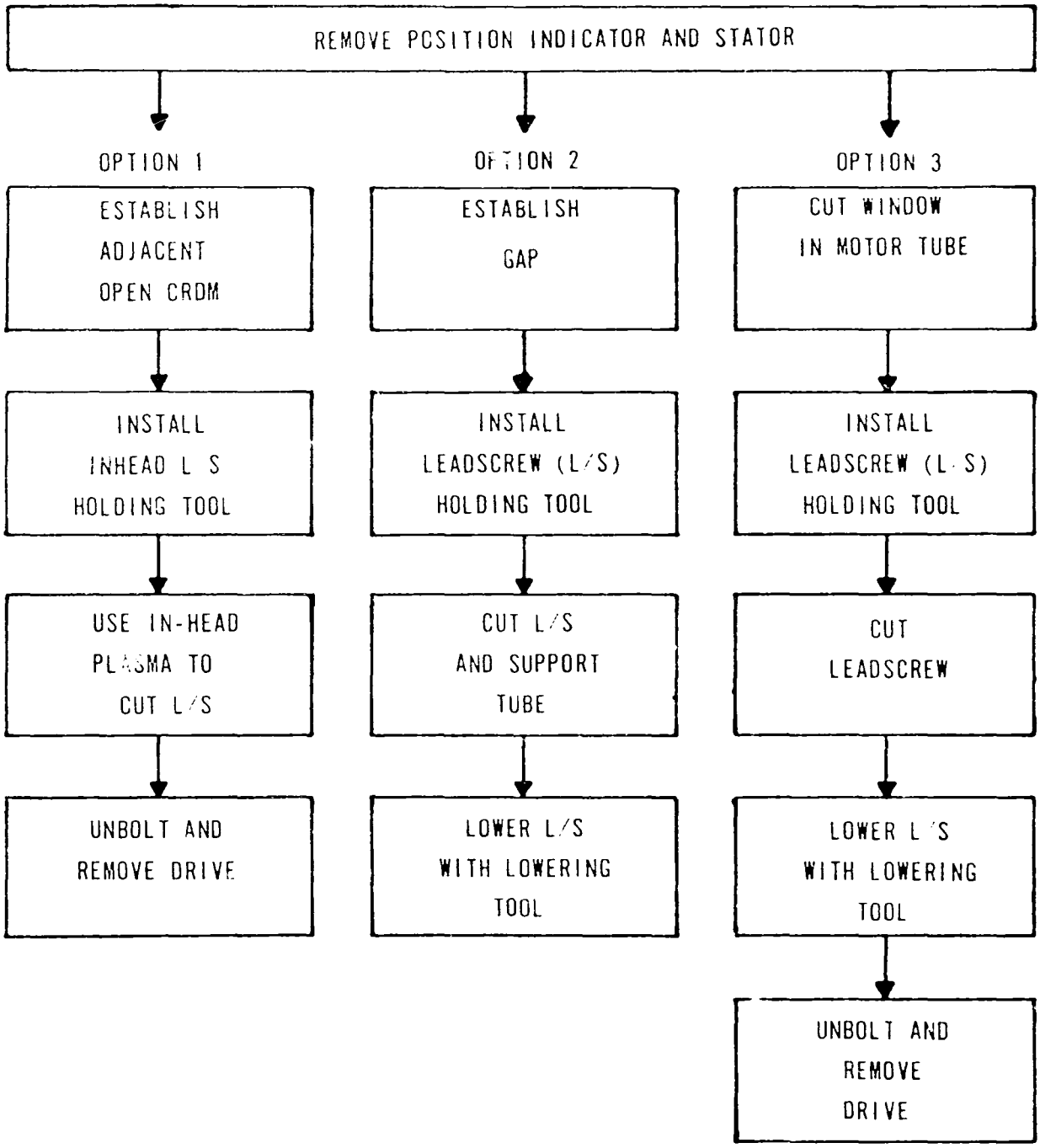

Figure 4.8 APSR REMOVAL

V. VIDEO EQUIPMENT

A. Functional Requirements

The functional requirements of the camera system are divided into three areas: results, physical limitations, and environment.

Under results, the following characteristics were considered:

- Resolution - The system must have sufficient resolution to accurately represent the complex shapes of any damage or unusual findings.
- References - The video system must have a field of view (greater than 20°) sufficiently large so that enough points of reference are included to define the location.
- Recordable Output - The inspection results must be accurately recorded by video tape.

Under physical size limitations, the following characteristics were considered:

- The camera head must operate at a minimum of 80 feet from the control unit.
- The camera head must be capable of passing through a 2.765" diameter opening.
- The rigid length of the camera head should be minimized to facilitate ease of entry via a complex path.

Under environment, the following reactor vessel conditions were considered:

- Maximum water depth of 80',
- Maximum water temperature of 140°F,
- Radiation levels up to 1000R/hr.,
- Low Light,
- Possible opaque water.

B. Camera

The video camera chosen is the Westinghouse ETV-1250. The purchase part drawing is B&W Drawing Number 1121417A.

1. System Description [1]

The ETV-1250 is a complete underwater video system specifically designed for nuclear reactor inspections. This system consists of two units. These are: the camera head and the control unit. These two units are connected by a 125' cable. The majority of the system's electronics are in the control unit, thereby, minimizing the components exposed to the harsh reactor environment.

The camera head is 12" long, and has an outside diameter of 1.25." This unit contains a field effect transistor video preamplifier, the camera tube, lenses, and a remote focus motor. These components are housed in a 316 stainless steel case. The camera head can withstand a gamma dose rate of 2×10^6 R/hr for a cumulative dose of 10^8R.

The camera control unit consists of a 4" (diagonal measured) monitor and contains all electronics not located in the camera head. These electronics include video processing circuitry, light control circuitry, rotating right angle viewing attachment motor control circuitry, and focus motor control

1 Note the ETV-1250 specifications sheet is included in Appendix VI.

1. System Description (con't.)

circuitry. This unit is housed in an aluminum case. All controls and connections are located on the front panel.

2. Accessories

The ETV-1250 has a complete line of accessories including a rotating right angle viewing attachment complete with a 150 watt tungsten halogen lamp, a lighted fixed right angle viewing attachment with two 20 watt tungsten halogen lamps, and a lighted axial viewing attachment with two (2) 20 watt tungsten halogen lamps.

3. Recommended equipment and spare parts inventory

Table 5-1 shows the recommended camera, spare parts, and accessories inventory. This inventory consists of two complete camera systems, a spare head, and assorted spare parts. The complete spare system is necessary in the event the system is damaged beyond immediate repair. By having an extra camera head, the need to change the viewing attachments on a highly contaminated head can be avoided.

C. Video recorder and monitor

In order to provide a permanent record of the inspections, a video record is needed. The following list enumerates the needed recording equipment:

---

1 This equipment may be supplied by GPU, however, B&W will require an inspection (to ensure compatibility) early in Phase III. Later in Phase III, B&W will require exclusive use of this equipment for mock-up testing.

C. Video recorder and monitor (con't.)

2 - Sony VC 3800 Video Recorder or equivalent
2 - Sony AC-340 AC Adapter
2 - Sony BP-20A Battery
20 - Sony 125 A60 Video Cassettes
1 - Distribution Amplifier

The cassette recorder was chosen to reduce the tape handling, and thereby, decrease the risk of contaminating the tape. Two recorders should be connected in parallel with a distribution amplifier to avoid any possibility of recorder problems resulting in an inspection not being recorded. These cassette recorders are not owned by B&W, and cannot be supplied by B&W on a rental basis. Reel to reel recorders owned by B&W can be supplied by B&W on a rental basis. However, procurement of new recorders is recommended since there is a high probability that equipment (including the reel to reel tapes), will be impossible to decontaminate to an acceptable level. This would necessitate B&W charging for the equipment. It is felt that procuring equipment best suited for the task in the first place is the most prudent approach.

Other equipment needed is an acceptable video monitor, and assorted cables required to connect the camera system with the monitor and video recorder.

D. Lighting

Auxiliary lighting will be provided for two reasons. First, the integral camera lighting output is not sufficient for broad area viewing. The manufacturer states that these lights

D. Lighting (Con't.)

are not designed for viewing objects further than 2 feet away. Second, the camera light will overheat if used in air. Hence, other lighting in the upper head of the drained reactor vessel is necessary.

Since a research of available equipment has not yielded satisfactory lighting, it has been necessary to design special lighting fixtures. Two lights have been developed for use inside the reactor vessel.

The first light, shown in Babcock and Wilcox Drawing Number 1121431E, is a modification of a standard underwater light. These modifications simply replace the large protective lexan cover on the light with a wire screen and protective braces. This modification reduces the diameter, and permits the light to pass through the 2.765 CRDM nozzle with a 250 W lamp. This light will be used for upper head illumination. The second light that has been designed has an outside diameter of only 1". This light is shown in B&W's Drawing Number 1121430E. This light uses a 250 watt lamp. A prototype of this light has been fabricated and tested with satisfactory results. This light can be inserted in the camera manipulator (behind the camera), or a separate manipulator, and follow the camera to the reactor core.

Light controls will be necessary to control the intensity of these two lights. Table 5-2 summarizes all video equipment (except camera system) needed.

E. Murky Water Viewing

As discussed in the phase one report, the most successful murky water viewing system tested consists of placing a plastic bag in front of the video camera. Once the bag is inflated with clear water and brought in contact with the object to be viewed, it is possible to obtain clear video pictures even though the water in the reactor vessel is murky.

The deployment mechanism for the plastic bag is shown in B&W Drawing Number 1121433E. This mechanism consists of a tube surrounding the camera. Clear water is fed to the bag by a feed line, while air is released by an air bleed line.

The plastic bag is made of 10 mill thick poly and has proven to be resistant to puncture and abrasions during tests. Also, the bags have been tested to 3 psi without failure while inflation pressures above 1/2 psi provide sufficient bag expansion to obtain good results.

The system to maintain 1/2 to 2 psi in the plastic bag will be evaluated during mock-up testing. This system consists of injecting only a fixed volume of water and having a feed and bleed system where the bleed tube is a few inches above the water level in the reactor vessel, causing 1/2 to 2 psi static pressure in the plastic bag. The feed water will be supplied from the top of the service structure.

The murky water video system will be employed only as a last resort. B&W expects only limited results using this technique. The field of view will be limited to the size of the plastic bag.

F. OTHER INSPECTION EQUIPMENT CONSIDERED

During Phase I, two other video cameras (Diamond ST-6 and Farsneh R-93) were considered. The comparison of these cameras is documented in the Phase I Report (B&W's Document No. 86-1121208-00).

During Phase II, another camera was considered - the EDO Western 1800 Series Underwater Camera. This camera was rejected for the following reasons:

1. The Focus Projection Screen (FPS) tube required 20 times as much light as the Westinghouse ETV-1250 Newvicon tube.
2. The large diameter (2.0") of the EDO Western Camera makes the manipulator design more complicated and eliminates the possibility of using the murky water viewing attachment.
3. The EDO Western Camera does not have integral lights.
4. The EDO Western Camera does not have right angle viewing attachments.
5. The higher resolution offered by the FPS Tube (FPS=800 lines, Newvicon=525 lines) is of little value since all resolution over 325 lines is lost once the video signal is stored on a video type recorder. Since practically all analysis of data will be done from the recorded information, all resolution over 325 lines is wasted.

Also considered was the use of blue-green light. This option was rejected since thallium (blue-green) lamps contain mercury, which can damage the stainless steel parts of the reactor. The only other practical way to produce blue-green light would be to use an incandescent light and an optical filter. This filter would attenuate the entire spectrum of light emitted and hence, this is not a reasonable approach.

F. OTHER INSPECTION EQUIPMENT CONSIDERED (Con't.)

Ultrasonic systems were considered in Phase I and the problems associated with ultrasonic inspection are documented in the Phase I Report.

TABLE 5-1 CAMERA EQUIPMENT

QUANTITY ON ORDER[1]	QUANTITY NEEDED[2]	DESCRIPTION	WESTINGHOUSE PART NO.
1	2	Minature Underwater TV Camera for Nuclear Reactor Inspection	ETV-1250
2	3	Newvicon Tube for ETV-1250	WL-5173
1	1	Spare Cable (125') with connectors for ETV-1250	35-4463
20	20	"O" Ring for ETV-1250	43-1016
1	1	Test Stand for ETV-1250	359372
1	1	Rotating right angle viewing attachment	35-4152
6	6	Lamps for 35-4152	35-4357
1	1	Lighted fixed right angle mirror	33916
1	2	Lighted axial viewing attachment	33915
12	12	Lamps for 33916 & 33915	2-790
0	1	Light control circuit board - 1201	35-2905
0	1	Sync. generator circuit board- 1202	35-2976
0	1	Deflection circuit board - 1203	35-2975
0	1	Video amplifier circuit board - 1204	35-2978
0	1	Low voltage supply circuit board - 1205	35-1974
0	1	High voltage supply circuit board - 1206	35-8931
0	1	Automatic light control board - 1207	35-2977
0	1	Camera head cartage assembly	35-4467
0	1	Video preamplifier circuit board - 1208	35-3465
0	1	Polycarbonate cover for 35-4152	40-4278
0	1	Motor control circuit board - 1209	35-2967
0	20	"O" Rings for 35-4152	43-1019

[1]This equipment has been ordered under Phase 2.
[2]This quantity is needed.

TABLE 5-2 VIDEO EQUIPMENT [4]

QUANTITY ON ORDER	QUANTITY NEEDED	DESCRIPTION	VENDOR	VENDOR MODEL NO.
0	2	Video Recorder	Sony	VO 3800
0	2	Distribution Amplifier	Any	-
0	2	Microphone	Sony	-
0	2	AC Adaptor	Sony	AC-340
0	2	Battery	Sony	BP-20A
0	20	Video Cassettes	Sony	125A-60
0	2	Video Monitor	Conrack	SNA-9
0	2 Sets	Assorted length cables to connect camera system, monitor, and recorder	B&W	-
0	3	Power stat light control	Any	-
0	2	Underwater light	-	-
0	10	Lamp 250 watt	-	-
0	2	Cable to be used on B&W fabricated 1" light	-	-

[4] See Table 5-1 for camera equipment.

VI. MANIPULATORS

A. Functional Requirements

Manipulators must be designed to maneuver both cameras and lighting inside the reactor vessel. Specific requirements are:

1. Cameras - Manipulator must be able to move a camera to four desired points of observation:

   a. Tops of peripheral fuel assemblies.

      - To reach this area, the camera must travel from point of entry, around the edge of the plenum cover, then down along the inside of of the plenum cylinder to a point directly above the peripheral fuel assemblies.

   b. The area between the core support shielding and the plenum.

      - The camera must travel from point of entry to the gap between the core support shield and the plenum; then down into this gap as far as possible.

   c. The interior of the control rod brazements.

      - The camera will be lowered straight down from the control rod drive mechanism nozzle into the guide tube brazements.

A. Functional Requirements (con't.)

d. The area on top of the plenum cover.

- The camera will be swept over the plenum in the available open area below the entry point.

2. Auxiliary Lighting - Manipulator must be able to position the auxiliary lighting in the upper head region for general illumination. It must be also capable of positioning auxiliary lighting down inside the plenum cylinder to a point above the fuel assemblies and down between the plenum cylinder and core support shield.

In addition to maneuvering its particular device to a desired location, each manipulator must also:

1. Be able to fit through the CRDM nozzle.
2. Not encounter interference from existing structures within the closure head.
3. Allow the connecting cable for the device to feed freely for both entry and exit operations.
4. Operate reliably.
5. Fit below the missile shield and pass through the personnel air lock.
6. Allow manipulator control from outside of penetration in vessel head.
7. Allow coordination with visual observation equipment for placement, sample gathering, etc.

B. Description

To fulfill all of these requirements, one manipulator has been designed. This manipulator, which is shown in B&W Drawing Number 1121431E (3 sheets) consists of a hinged tube connected to a long tube. The concept of how this manipulator works is illustrated in Figure 6.1.

The manipulator is constructed from aluminum tubing sections with threaded ends for ease of assembly. Once inside in the reactor building the manipulator can be assembled from the service structure as it is inserted into the manipulator support tube. The moveable tube, as well as the lower offset tube, has rollers to reduce friction of the cable as the camera is lowered. These two sections are connected by an oil-less bearing. The offset tube movement has a range of 0°-90°. The weight of the manipulator will be supported by a shaft collar resting on the top of the CRDM replacement motor tube. A stainless steel cable is attached to the end of the moveable tube and runs the length of the manipulator up to a hand winch. The winch allows for controlled movement of the lower tube as well as providing a locking mechanism to hold the tube in a set position.

The longest section of the manipulator is 12' in length. This will fit into the personnel hatch with the doors shut and will also fit under missile shield during assembly. The overall weight of the tool with camera does not exceed 85 lbs.

B. Description (Con't.)

The small light can be inserted behind the camera and follow the camera to the top of the core. A separate manipulator for the light can be used if a second CRDM nozzle is available.

The murky water viewing system will have to be inserted before the manipulator is placed inside the head. The combined length of the murky water attachment and one articulated portion of the manipulator will require that a pull up cable be used to pull the camera with murky water attachment up to prevent interference with the brazement. This concept is illustrated in Figure 6.2.

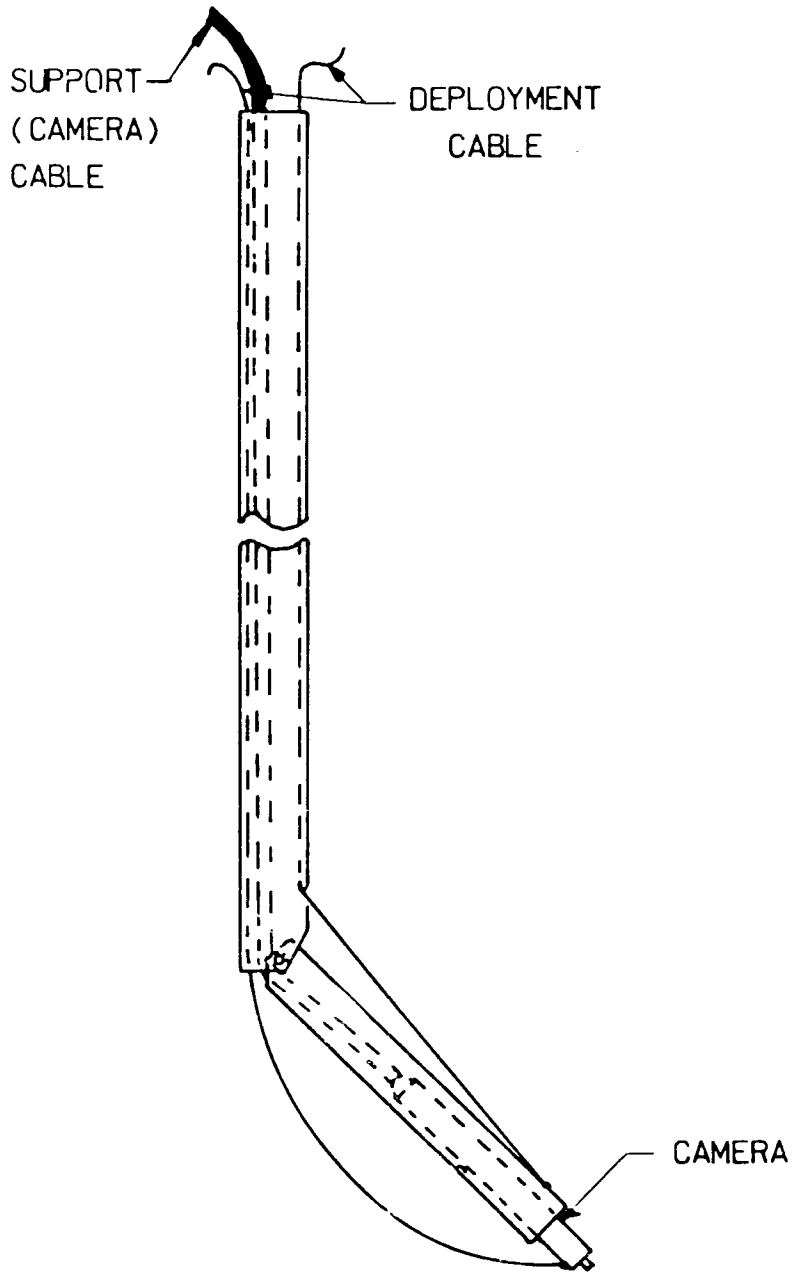

FIGURE 6.1 - MANIPULATOR CONCEPT

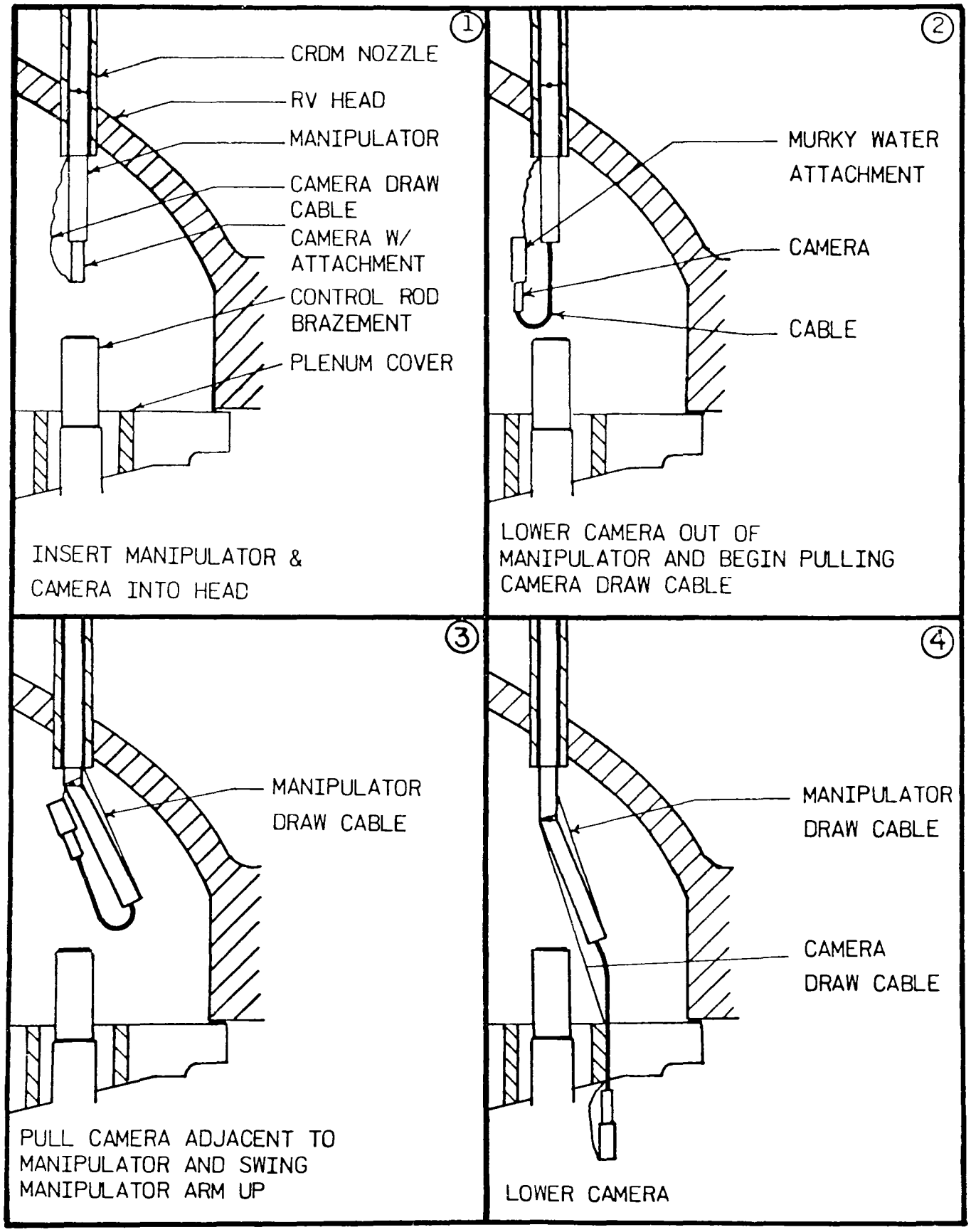

FIGURE 6.2 MURKY WATER MANIPULATOR

VII. RADIOACTIVE EQUIPMENT STORAGE

During Phase III, B&W will design storage racks for radioactive equipment removed from the reactor vessel during the inspection task. The equipment racks will be designed to pass through personnel hatch and be constructed in the refueling canal. The radioactive equipment which will be stored in these racks falls into three catagories: Reactor components removed to gain access to the inside of the vessel, tools used to remove the reactor components, and special equipment used for the inspection (camera, lighting manipulator, water level system, replacement motor tube, purge system, etc.)

A. Reactor Component Storage

The major reactor components removed are the CRDM's. Racks will be constructed to hold all parts (motor tube, stator, leadscrew, etc.) for up to four CRDM's. Portable shielding (not part of B&W's scope of supply), such as lead bricks and lead blankets will be used to attenuate the radiation from potentially radioactive leadscrews. The leadscrews will have highest activity as they are removed from the vessel. Other CRDM components (motor tube, position indicator, etc.) will have much lower levels of activity and hence, will require only a minimum of shielding.

B. Tool Storage

The only tools which may become highly radioactive or have highly radioactive material attached are the in-head plasma cutter and the push/pull leadscrew separator. Both of these tools can potentially have highly radioactive debris attached.

B. Tool Storage (Con't.)

Portable shielding will be used as necessary. Other tools (stator removal, bolt removal, etc.) will be less active.

C. Special Equipment Storage

The only special equipment that has the potential to become a radiation hazard is the video camera head (including murky water and other attachments) and the underwater light. Since those items will be in close proximity to the core, there is the potential for highly radioactive debris to become embedded. Other special equipment, such as manipulators, water level system, and replacement motor tube may become contaminated to low levels. Racks or containers will be used (with temporary shielding if necessary) to store these items.

In all cases, B&W will rely on site Health Physics personnel to establish shielding and decontamination procedures.

VIII. MOCK-UPS

Inspection equipment will be tested on a full scale mock-up of a segment of the reactor vessel. The cutting equipment will be tested on scrap material in a separate mock-up.

The full scale mock-up of the reactor is shown in B&W Sketch Numbers SKNEC92980, SKNEC10180, and SKNEC10280. This mock-up consists of a steel tank with the reactor internals simulated by wood. There are three CRDM nozzles included to permit full simulation of inspection and sampling procedures. Also included is a thermocouple nozzle and simulated missile shield. An under missile shield hoist will be included.

Scrap material will be used to test cutting equipment and procedures. A scrap motor tube and leadscrew have already been obtained for this purpose.

In all cases, full radiological protection equipment and procedures will be used.

IX. MISCELLANEOUS TOOLS & EQUIPMENT

All miscellaneous tools and equipment will be identified and procured during Phase III. This will include such items as hand tools for CRDM work and long handle tools. The needed tools will be identified during mock-up testing.

B&W will also supply all lighting for inspection operations. This will be both in-vessel and outside vessel lighting.

X. INTERFACE REQUIREMENTS

The following list enumerates areas in which B&W will need site support to perform the inspections:

1. Training - Site should supply all security, health physics, and other training required so that B&W personnel may gain site/reactor building access.

2. Electric Power - B&W provided equipment will require Ten (10) twenty amp, 110 volt single phase circuits; One (1) 100 amp, 3 phase, 480 volt circuit; and Two (2) 50 amp, 3 phase, 480 volt circuits. These two 50 amp circuits should not be supplied from a common circuit.

3. Portable shielding, personal radiation monitoring devices, anti-contamination clothing, and forced air respirators - site should supply these items as well as any other radiation protection equipment required by site health physics procedures.

4. Health Physics Coverage - Site should supply sufficient health physics personnel to provide continuous coverage during the inspection task.

5. Draindown equipment and personnel - Site should supply all personnel and equipment to drain the reactor vessel down to the plenum cover. B&W's current proposal does not include the lowering or maintaining the water level of the reactor vessel.

6. Personnel - Site should supply all craft personnel consistent with site/union agreements. B&W can supply this labor if requested to do so. To minimize organizational interfaces, B&W recommends that B&W's craft labor be utilized. B&W - Special Products - will supply a continuous coverage of three engineers to perform the inspection.

X. INTERFACE REQUIREMENTS (Con't.)

7. Audio communications - Site should supply an acceptable means for inspection personnel to communicate with personnel outside the reactor building.

8. Service structure access - Site should supply an acceptable means to get personnel and equipment to the top of the service structure. All currently proposed equipment can be hand carried or hoisted up to the operating floor. Site should also supply an acceptable means for a person to get down onto the reactor vessel head outside the service structure to remove the thermocouple flanges. Site should also supply an acceptable location where a 4 X 4 pallet can be hoisted from the 305' level to the 347' level.

9. Normal CRDM tooling - Site should supply all normal CRDM tooling. B&W does not currently plan to supply replacements for the normal CRDM tooling. B&W will supply these tools upon request.

10. Laydown area - Site should supply an acceptable laydown area for the racks described in Chapter 7 - Detailed size requirements will be provided later.

11. Tool assembly area - Site should supply an area inside the reactor building designated for the purpose of assembling CRDM tooling and inspection equipment. An area on the 347' level, approximately 10' X 20' is required.

12. Air Supply - Site should supply the normal air supply for the normal CRDM tools, which require an air source.

XI. INGRESS OF EQUIPMENT AND TOOLS

All tools and equipment used on this project will be hand carried through the personnel air lock and either hand carried or hoisted up to the 347' level. Special rigging will be supplied by B&W for this task.

XII. SWIPE SAMPLING

The functional requirements of the swipe sampling tools are as follows:

- Be capable of taking swipe samples of the plenum cover in the vicinity of the access nozzle.
- Be capable of taking swipe samples in the region of the spider assembly of a normally uncoupled control element.
- Have swipe attachment that can be easily removed and replaced.
- Function below missile shield.
- Pass through personnel hatch.

To fulfill these requirements, two tools will be used. The first tool, shown in B&W Drawing Number 1121348E, has the capability to take swipe samples of the plenum cover. This tool has three hinged tubes that are controlled by two cables. The swipe taking material is deployed, and retracted by a stiff wire.

The second swipe tool, shown in B&W Drawing Number 1121444E, is for taking swipe samples from the top of the control rod spider assembly. This tool will be a straight manipulator in which swipe taking material is inserted and retracted by a stiff wire.

APPENDIX I

This appendix contains a list of material prepared for this project.

DOCUMENTS

B&W NUMBER	TITLE	PREPARER/DATE
32-1119829	Gamma Dose Rates in Upper Plenum of TMI-2 After 6000 Hours	S.Q. Doggett 9/5/80
86-1120493	Various Doses and Dose Rates Associated with TMI-2 Vessel Inspection	S.Q. Doggett 9/4/80
32-1122117	Leadscrew Separation Feasibility	T.D. Piatt 11/5/80
32-1122349	Stator Removal Tool Design Abnormal Removal Conditions	G.R. Lawrence 12/2/80
32-1122350	CRDM Hold Down Bolt Removal Tool Design - Abnormal Removal Conditions	G.R. Lawrence 12/2/80
32-1122507	Leadscrew Puller/Separator Design	T.D. Piatt 12/10/80
32-1123476	Flow Rate Requirements for "Bubble" Water Level Indicator	D.W. Greenlee 1/28/81
86-1121208	In-Vessel Inspection Before Head Removal TMI-2 Phase I (Conceptual Development)	N.E. Calloway & others 10/28/80
86-1123137	Design Review Phase II Pot-hole Tooling	T.D. Piatt 12/8/80
86-1123484	Design of a Primary Water Level Indicator	D.W. Greenlee 1/29/81
32-1123902	Bubble Pipe Clearance for Water Level Indication System	D.W. Greenlee 2/25/81

DRAWINGS

B&W NUMBER	TITLE
1121396D	Primary Water Level sensing System
1121399F	Leadscrew Puller/Separator Ass'y.

DRAWINGS

B&W NUMBER	TITLE
1121400E	Leadscrew Puller/Separator Details
1121348E	Swipe Tool Assembly
1121444E	Swipe Tool Assembly (Fuel Assembly Top Area)
1121417A	Camera for In-Vessel Inspection Before Head Removal
1121424E	Manipulator Support Tube
1121429E	Underwater Light
1121430E	Modified Hydro Light Ass'y. and Details
1121432F	Stator Lifting Tool Ass'y. and Details
1121431E	Camera and Light Manipulator Ass'y. Sheet 1 of 3
1121431E	Camera and Light Manipulator Details Sheet 2 of 3
1121431E	Camera and Light Manipulator Details Sheet 3 of 3
1121433E	Murky Water Viewing Attachment Ass'y. and Details
1121446F	Bolt Removal Tool Ass'y.
1121447E	Bolt Removal Tool Details
1123010D	CRDM Blind Flange and Replacement Tool
1123011E	T/C Blind Flange

SKETCHES

SKETCH NUMBER	TITLE
SKNEC092980	Internals Mock-up
SKNEC100180	Reactor Head Mock-up
SKNEC100280	Reactor Vessel Penetration Mock-up
SKTDP103180	In-Head Leadscrew Cutter

APPENDIX II

LEADSCREW PIN TORQUE SHEARING TEST SUMMARY

This test was performed to determine if applying torque to shear the 410 stainless steel pins is a viable option. Specific items to be determined were:

1. How much torque is necessary to shear the pins? An estimate of this value is 1100 Ft. - lbs.

2. Do any parts fail before the pins?

3. Does the failure, regardless of where it is permit removal of the leadscrew without uncoupling?

4. If failures occur (other than the pins), do these failures preclude continuing to apply more torque to shear pins?

DESCRIPTION

The test stand is shown in Figure A2.1. The torque arm was 3'-10" long, and a force of 200 lbs. was applied producing a torque of 766 ft.-lbs. At this point, the welds connecting the spider and the hub failed. Since this permitted the spider to rotate on its hub, no further torque could be applied, and the test was terminated.

DESCRIPTION (Con't.)

Prior to the spider hub failure, the spider and control rods were deformed.

RECOMMENDATIONS

It is recommended that the torque shearing option be abandoned.

FIGURE A2.1 - TEST STAND

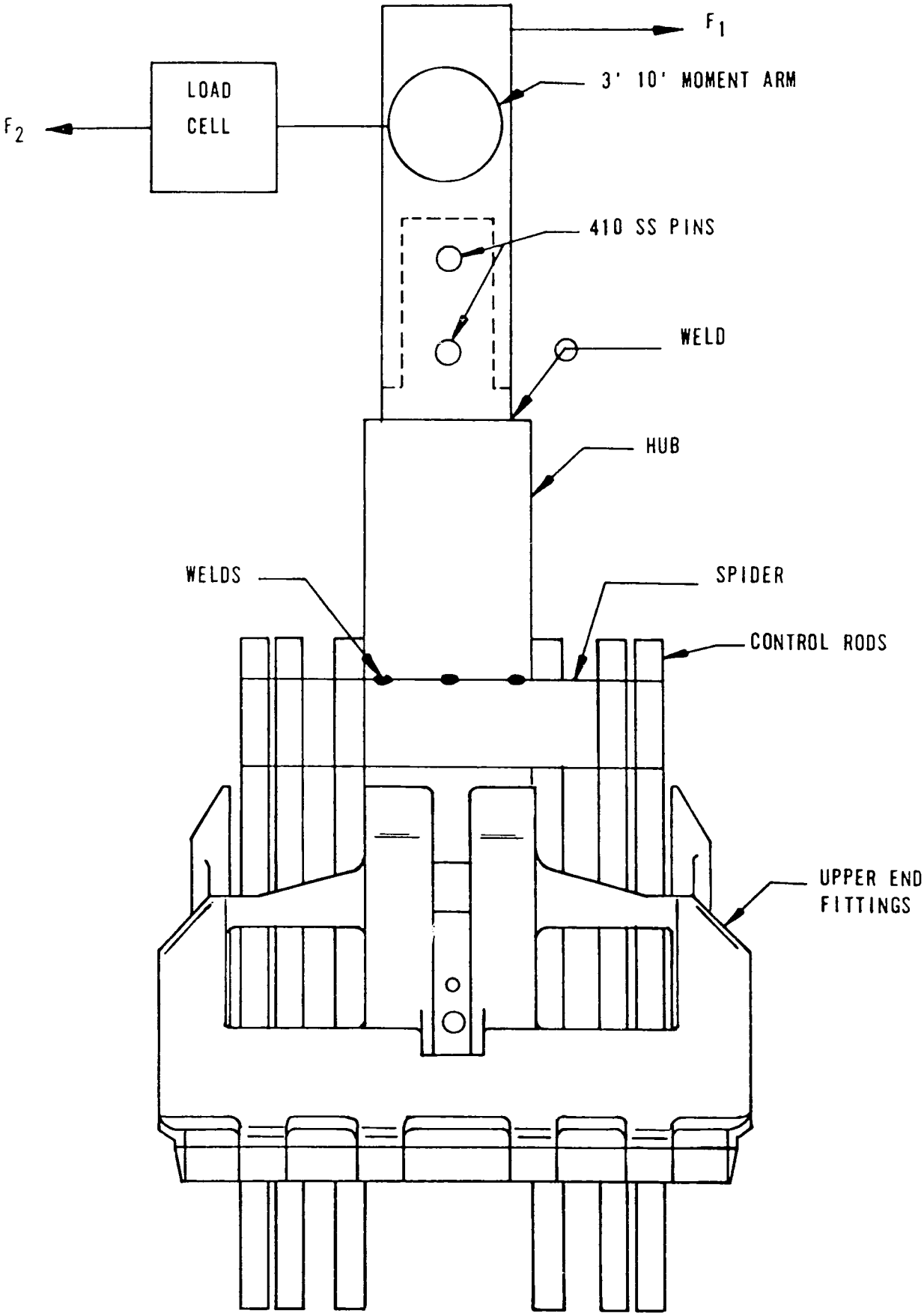

APPENDIX III

LEADSCREW PLASMA CUTTING TEST

PURPOSE OF TEST

The purpose of this test is to demonstrate that plasma arc cutting is a fast efficient way to cut stainless steel.

DESCRIPTION

The test consisted of cutting an actual leadscrew (17-4PH stainless steel), with a plasma arc torch.

RESULTS

A cutting time of approximately five seconds was required for the leadscrew.

APPENDIX IV

LEADSCREW PIN TENSILE SHEAR TEST

PURPOSE OF TEST

This test was performed to determine if applying tensile stress to shear the 410 stainless steel pins is a viable option. Specific items to be determined were as follows:

1. How much force is necessary to shear the pins?

   Estimates of this value are 12 tons.

2. When the pins shear, is there any reason why this does not permit removal of the leadscrew?

3. Does this procedure pose a missile hazard?

DESCRIPTION

The shear block shown in Figure A4.1 was constructed to test this procedure. The block was then placed in a 75 ton hydraulic press, and force applied until the pins failed.

RESULTS

In each of four tests, the pins failed at approximately 12 tons. No missile problems were observed, and there were no indications that this type of separation would cause jamming of the pinned connection.

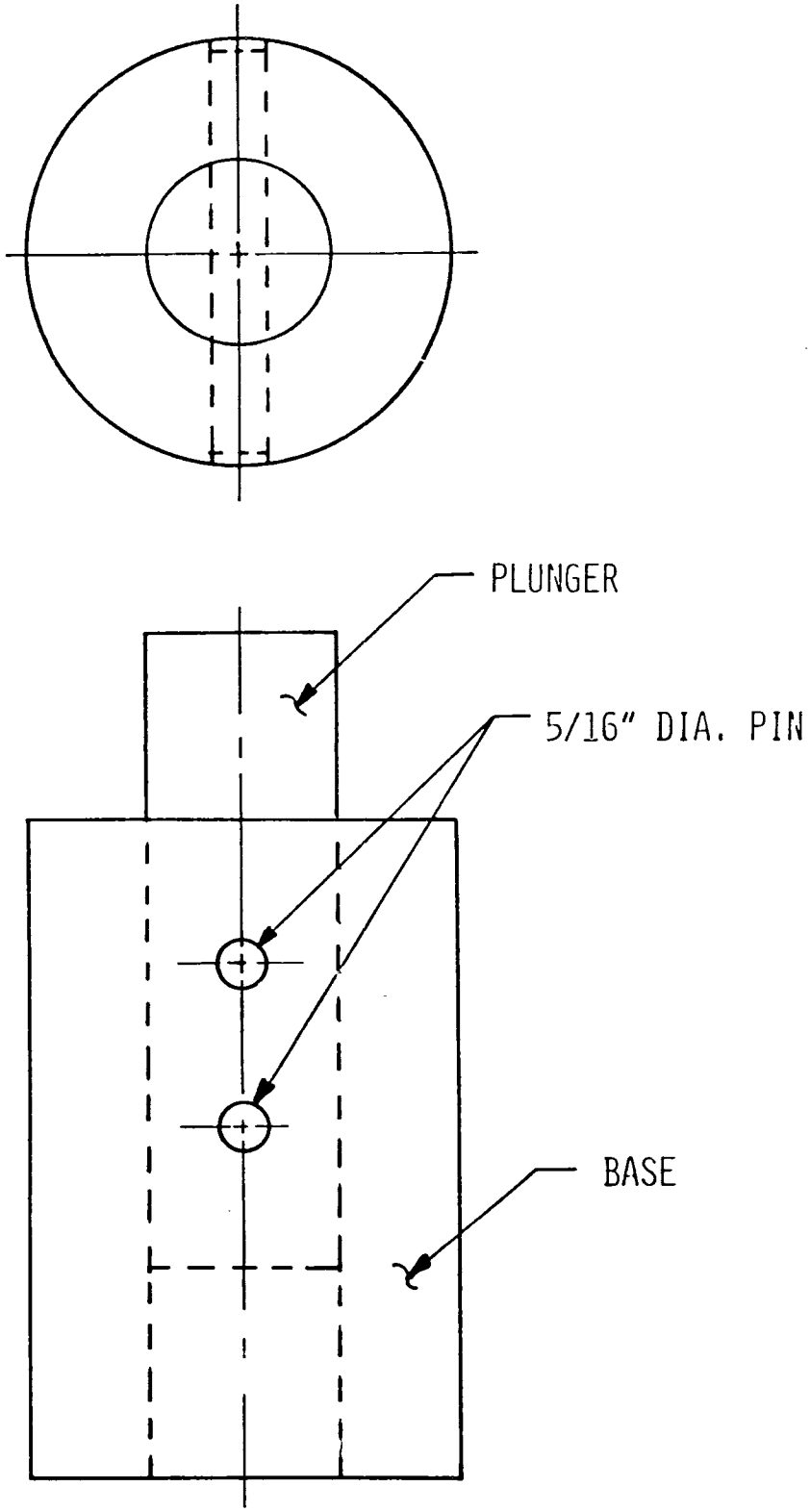

FIGURE A4-1

PIN SHEAR TEST BLOCK

APPENDIX V

LEADSCREW PUSH/PULL SEPARATOR HUB TEST

PURPOSE OF THE TEST

To evaluate if the tube end will deform or expand, and get wedged on the spider hub, thus preventing removal of the push/pull tool.

PROCEDURE

The assembly was tested as shown in Figure A5.1, using 75 ton hydraulic press. The bottom part into which Part 'A' set was the spider assembly.

First a part 'A', Figure A5.2, with outside diameter 1.625" was used with the 304 stainless steel, Part 'B', Figure A5.3, in order to simulate ideal conditions of perfect centering on the hub of the spider assembly. The assembly was pressed at increasing forces of 5,10, 15, and 20 tons for approximately 15 seconds. After each press, Part 'B' was removed and examined for any deformations.

Part 'A' was then replaced with the smaller, 1.5 outside diameter part, and the test was repeated, each time with Part 'B', as far off center as possible to simulate worst case. For the final test, the hardened 416 stainless steel, Part 'B' was pressed at 20 tons for approximately 15 seconds, and then examined. Using the small outside diameter, Part 'A', and worst case off center, as before.

RESULTS

The 304 stainless steel, Part 'B' showed a slight off center indentation on its base where it contacted the hub after the 20 ton off center test. Subsequent examination showed that it was slightly out of round as it would no longer slide onto the 1.625 outside diameter, Part 'A', although this out of round condition could not be measured with fairly precise calipers.

The hardened 416 stainless steel, Part 'B', showed no sign of deformation, and still would slide easily over the 1.625 outside diameter, Part 'A'.

CONCLUSIONS

The 304 stainless steel, Part 'B', tube end is more than adequate for 20 tons of force and no problems are foreseen, however, the 416 stainless steel part will be used.

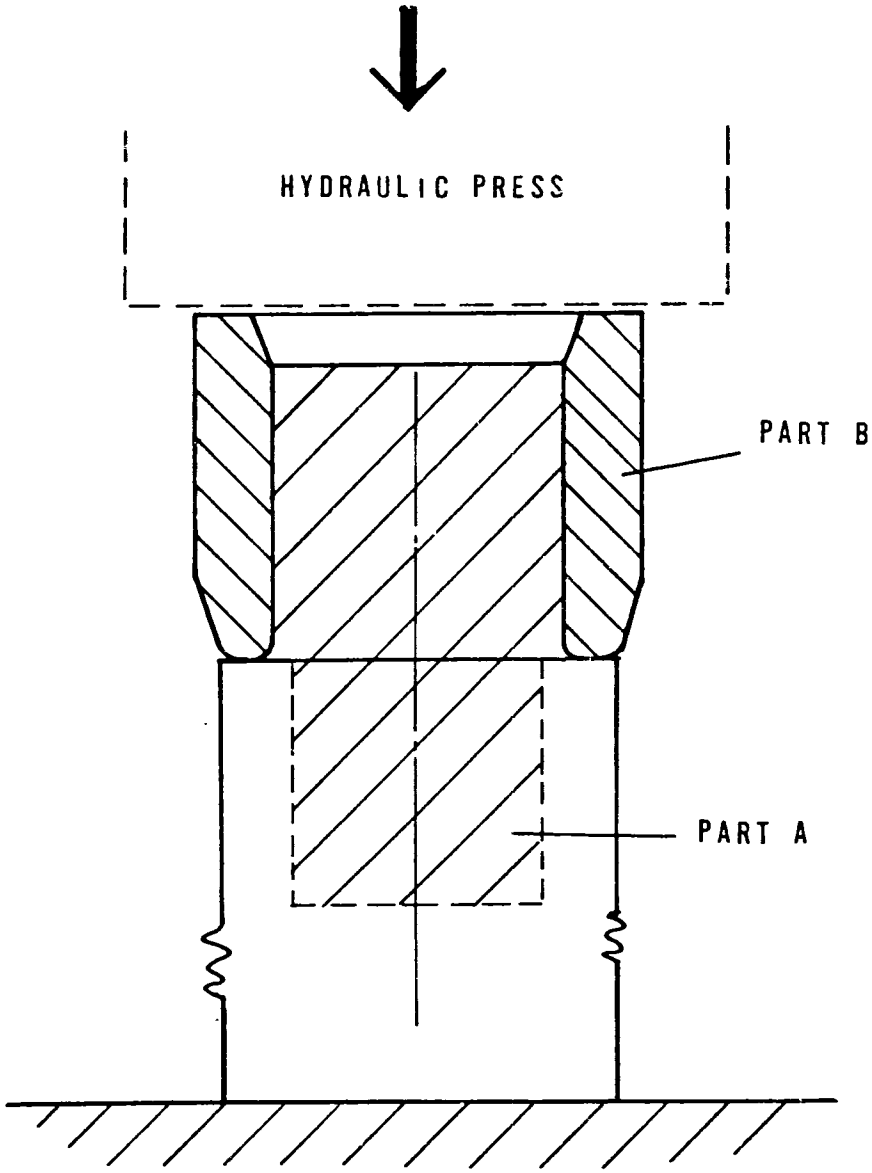

FIGURE A5.1 TEST ASSEMBLY

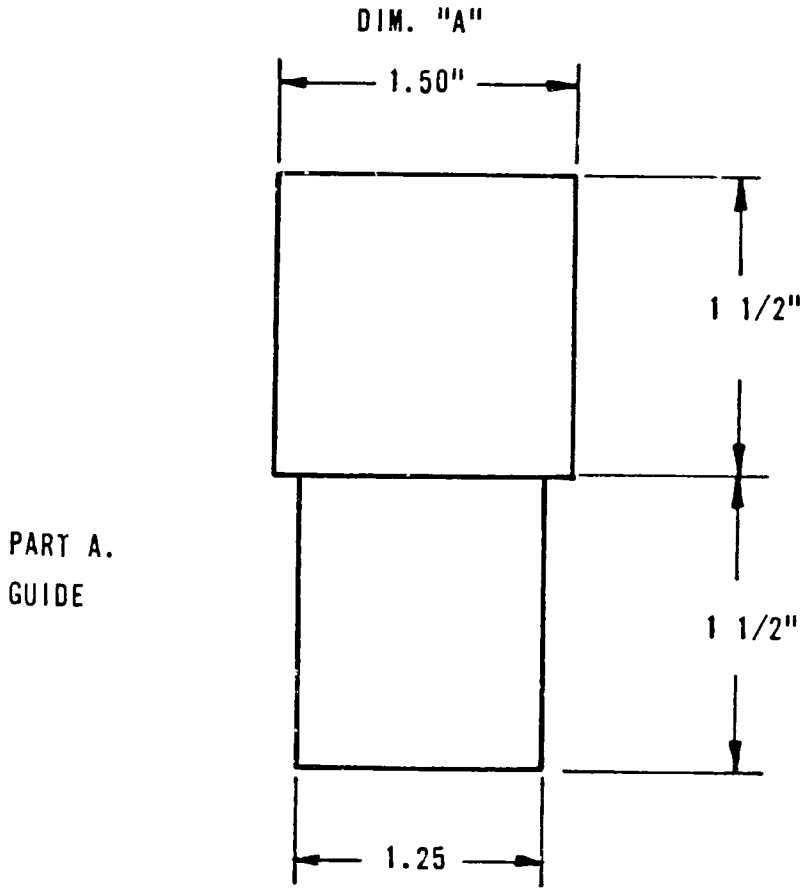

1. ONE PART AS SHOWN.

2. ONE PART WITH DIM. A $\cong$ 1.625 TO MAKE SLIDING FIT WITH PART B. ID

3. MATERIAL TO BE STAINLESS STEEL, CARBON STEEL, SOLID OR PIPE, AS AVAILABLE. NOT A LOAD BEARING MEMBER.

FIGURE A5.2

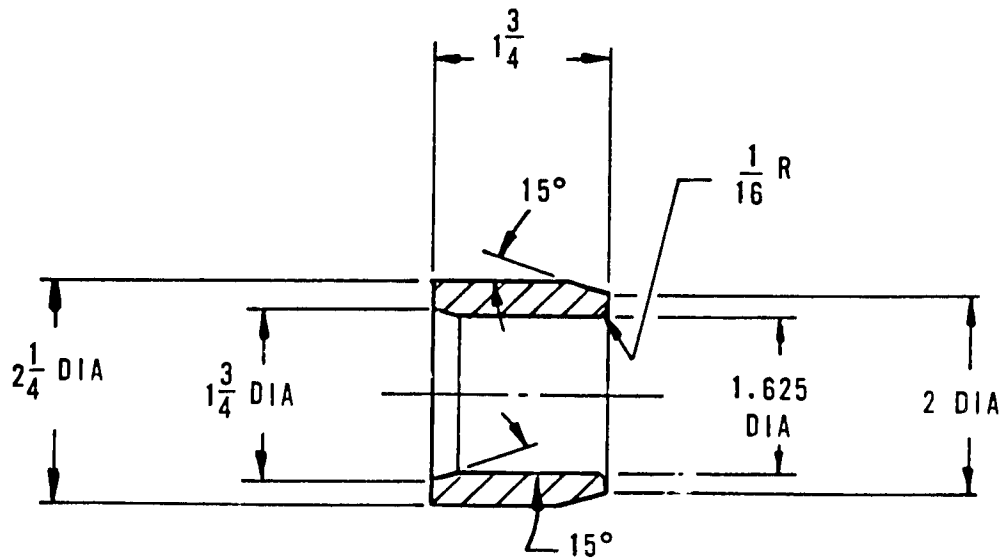

TUBE END

SCALE: HALF SIZE

MATERIAL: 1 304 SS PART B

2 HARDENED SS; 304,410

FIGURE A5.3

APPENDIX VI

Contained in this appendix is the Westinghouse ETV-1250 specification sheet.

Miniature Underwater TV Camera For Nuclear Reactor Inspection

FEATURES

- Small Camera Head 1.25" (32 mm) Diameter x 12" (305 mm) Length
- Radiation Tolerant Camera Head
- High Resolution – More Than 550 TV Lines
- Remote Optical Focus
- Wide Dynamic Range – More Than 10,000: 1
- Internal Option For EIA RS170 (US) Or CCIR (European) Sync
- Easy To Use, Easy To Maintain
- Built-In View Finder Monitor
- Internal Light Source Power Supply
- Right Angle Scanning Attachment With Integral 150 W Light Source

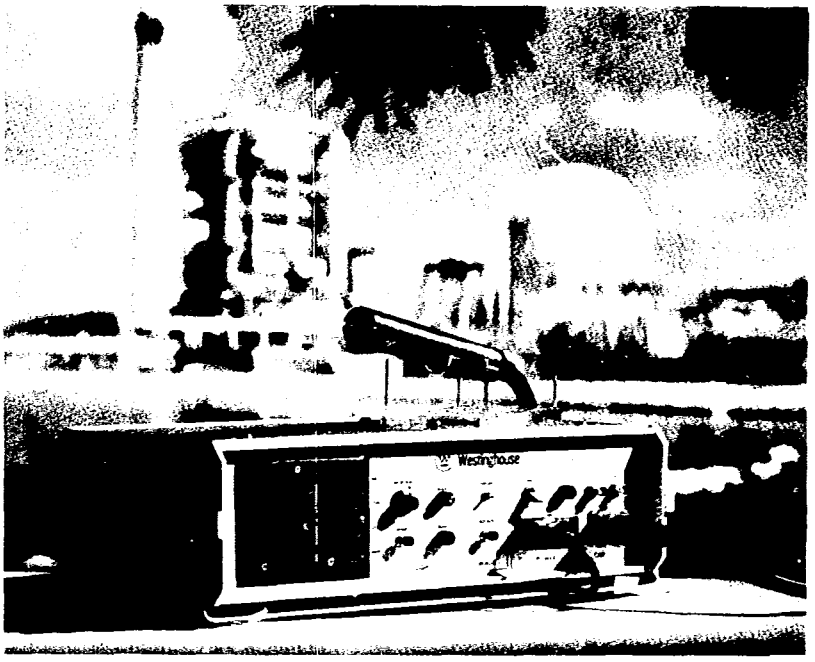

APPLICATION

Closed circuit television cameras have found increasing use in many aspects of nuclear reactor vessel internals inspection, maintenance, and fueling support operations. TV cameras allow remote viewing in environments that are extremely hostile to a human observer. They provide much greater flexibility of setup than other optical equipment and facilitate permanent record keeping through the use of video tape recorders.

The ETV-1250 is a complete TV inspection system specifically designed for nuclear reactor use. It can operate in high radiation environments, up to 100 feet underwater and over a wide range of temperatures, making the camera desirable for a variety of underwater applications.

The main feature of the ETV-1250 is the miniature size of the camera head which allows its use in areas not accessible to cameras used previously. Miniaturization is achieved while essentially maintaining the resolution and sensitivity performance of much larger underwater TV cameras. The camera employs a 2/3" diameter, electrostatic focus, magnetic deflection vidicon which provides more than 550 TV lines resolution, has its peak sensitivity at 520 nm and produces a useable picture with only 0.06 footcandles faceplate illumination. This corresponds to a scene brightness of approximately 2 foot lamberts when using the standard f/2.8 lens. For lower light level operation, the camera is designed to accept other 2/3" tubes such as Silcon Target Vidicon or Newvicon® types.

DESCRIPTION

The complete closed circuit TV camera system consists of two units: a camera head and a camera control unit (CCU) connected with a 125 foot (38 meter) flexible multilead underwater cable of 0.57" (14.5 millimeter) diameter. As an option, the camera head can be equipped with a rotating right angle mirror viewing head with integral light source. The complete inspection system is supplied in two sturdy fiberglass carrying cases, each 20" long, 19" high, and 9" wide (520 x 490 x 220 mm). The total weight is 44 and 51 pounds, 20 and 23 kg respectively.

Camera Head

The camera head contains a removeable cartridge that includes the lens, the camera tube assembly, the low noise FET video preamplifier, and the remote focus motor. This plug-in cartridge is contained in a housing made of series 300 stainless steel with the outside polished for easy cleaning. One end of the housing is permanently attached and factory molded to the cable. Threaded into the other end of the housing is the optical viewing port assembly, containing a non-browning quartz window. The threaded end contains the only replaceable "O" ring seal of the camera head. The standard lens is a radiation tolerant, fixed aperture, 16 mm f/2.8, providing a diagonal field of view of 38° in air and 28° in water.

Right Angle Viewing Attachment

The right angle viewing attachment is an optional accessory to the camera head and is specifically designed for underwater applications. It has the same small diameter as the camera head (1.25") and provides 360° radial scanning capability through the use of a motorized 45° angle mirror assembly. The nominal rotational speed is one revolution per minute; scan direction and stop are remotely controlled from the CCU. This viewing attachment contains a single 150 W, low voltage tungsten halogen lamp. Light intensity is controlled from the CCU. The complete assembly is threaded into the front of the camera head housing in place of the standard optical viewing port, increasing the overall camera length to 21" (533 mm). Electrical contact is made automatically.

Camera Control Unit

The CCU contains a 4" diagonal viewfinder monitor, all camera tube power supplies, control and video processing circuitry, and a power supply for the integral light source. It is enclosed in a sturdy aluminum cabinet. All cable connectors and operation controls are located on the front panel, which is protected during transport and storage by a hinged cover plate With the cover plate closed, an integral carrying handle makes the CCU an easily portable self-contained unit.

Solid state circuitry is utilized throughout. Circuits are designed for high stability, low power consumption, reliable operation, and long life. All critical power supplies are electronically regulated to assure a stable picture and to maintain resolution over the specified temperature range and for long periods of unattended operation. For easy maintenance, all camera circuits are mounted on plug-in printed circuit cards readily accessible from the top of the CCU.

The sync generator is crystal controlled and provides composite sync in accordance with EIA Standard RS170 (525 TV lines, 60 fields/second). This allows optimum interface with virtually any external monitor and video tape recorder. A jumper wire connection on the sync generator permits operation at CCIR Standard (625 TV lines, 50 fields/second). A sync input/output terminal is available at the front panel to use the internal sync generator as a master sync or as a slave to external equipment. Selection is made with a slide switch located also on the sync generator.

The video circuitry has a bandwidth of 8 MHz and includes fixed delay-line aperture correction, DC restoration by a line-by-line clamp, and a white peak clipper. The video signal is available at a front panel BNC connector.

The camera is designed for "hands off" operation. The only controls are switches for power "on-off" and remote focus. Beam current and electrical focus are internally preset and require no adjustment during normal operation. Automatic light control (ALC) circuits sense the average video signal and adjust target voltage and video gain for varying light levels. The video output signal is kept essentially constant over more than 1000:1 change of light level above the ALC threshold. The dynamic range is in excess of 10,000:1.

The built-in 4" monitor is powered by the main CCU transformer. Monitor controls located on the front panel are Brightness, Contrast, Horizontal, and Vertical Hold.

The CCU cabinet contains a 150 watt DC power supply variable from 0 to 24 volts to power the light source and, through a control circuit, the rotating right angle mirror motor. Overcurrent of the light bulb is prevented by protective circuitry. A green "Run" light located on the front panel indicates normal operation of the light source; a yellow "Max." light is activated at the rated current of the bulb. Further increase of the lamp current will trigger an automatic shutoff. The light source is reactivated by reducing the current and pressing the "Reset" button.

ENVIRONMENTAL CONSIDERATIONS

The camera has been designed and tested for operation at temperatures from -25 to +60°C (-13 to 140°F) and underwater operating depths in excess of 100 feet (30 m).

Special consideration was given to the radiation environment by keeping the electronic circuitry in the camera head to a minimum and using radiation tolerant components. Gamma radiation dose rate may be in excess of 2×10^6 R/hr to a cumulative dose of 10^8 R. Faceplate glass discoloration of the vidicon tube begins near 10^5 R. Radiation hardened camera tubes may be supplied as an option but, since the standard tube is comparatively inexpensive and easily replaced, lower overall system cost will normally result from the use of this tube.

®Registered trademark of Matsushita Electronics Corporation

Exploded View of Camera Head

Optical Viewing Port **Plug-in Cartridge** **Camera Housing**

CAMERA CONTROL UNIT

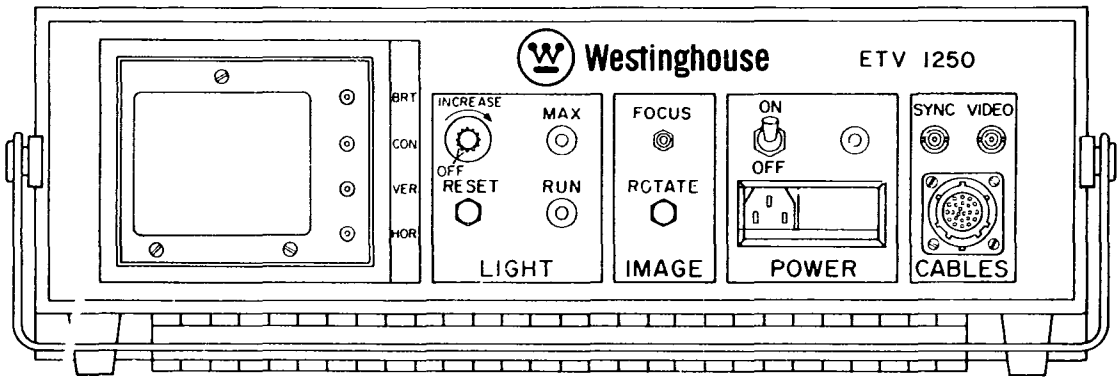

CE-A2871

RIGHT ANGLE VIEWING ATTACHMENT

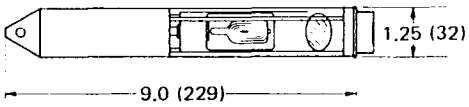

CAMERA HEAD

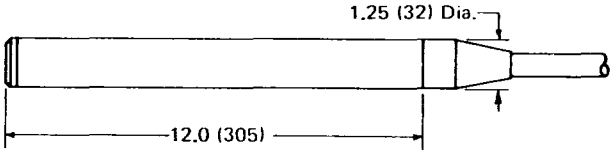

Dimensions are in inches (millimeters)

CE-A2870

Camera Control Unit

Camera Head

Right Angle Viewing Attachment

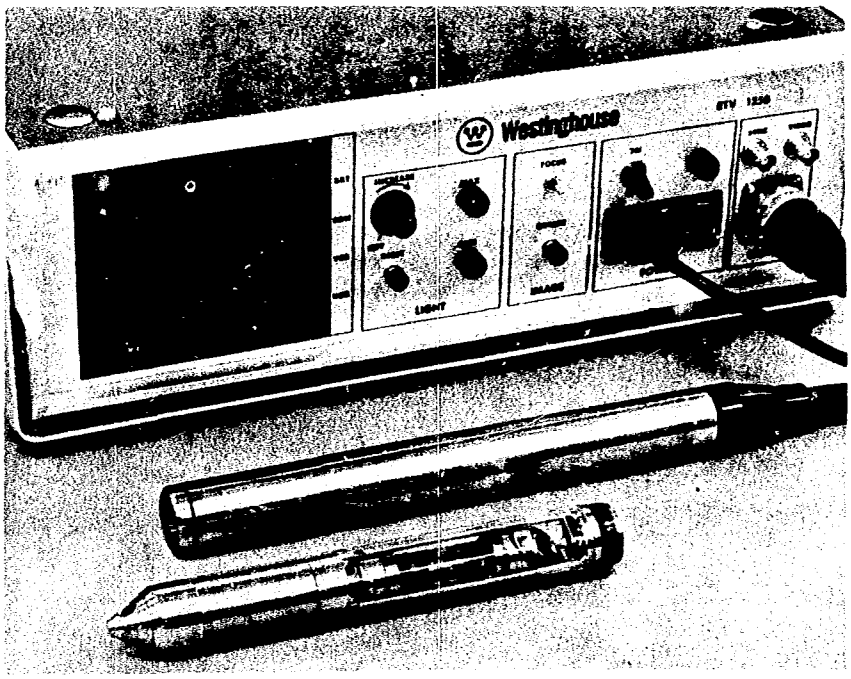

Minature Underwater TV Camera for Nuclear Reactor Inspection

ELECTRICAL SPECIFICATIONS

Sensor	2/3" Vidicon
Resolution	550 TV lines/raster height minimum
Sensitivity for Signal to Noise Ratio of 10 (20 db)	
Faceplate Illumination (2854°K)	0.125 fc
Scene Brightness f/2.8 lines – (2854°K)	4 fL
Signal-to-Noise Ratio (unweighted-8 MHz bandwidth & aperture boost)	36 db at maximum light level
Gray Scale	10 shades of gray, minimum
Video Bandwidth (3db)	8 MHz
Video Output	Overall signal 1.4 Vpp, 1 V video, 0.4 V sync–75 ohms
Aperture Correction	6 db boost at 5 MHz
Automatic Light Level Compensation	Less than 3 db change of video output for more than 1000:1 change of light level above 0.125 fc
Synchronization	EIA RS 170 (525 lines, 60 fields/sec., 2:1 interlace) Crystal controlled, Internal option to CCIR Standard (625 lines, 50 fields/sec., 2:1 interlace)
Sync Generator	
Input/Output	Composite sync, negative going 4 Vpp, 75 ohms
Scan Linearity	±2%
Aspect Ratio	4:3
Power:	
Line Voltage	115/220 V, 60/50 Hz
Camera, Incl. Viewfinder Monitor	37 VA nominal
Total when light source is in use	Up to 220 VA

OPTICAL SPECIFICATIONS

Lens	16 mm f/2.8 radiation tolerant
Diagonal Field of View	38° in air; 28° in water
Remote Focus Range:	
Straight Viewing	2" (50 mm) to infinity
Right Angle Attachment	1" (25 mm) to infinity

ENVIRONMENTAL SPECIFICATIONS

Camera Head and Right Angle Viewing Attachment

Operating Temperature	-25° to +60°C (-13 to 140°F)
Operating Depth	100 ft. (30 m)
Radiation	Gamma dose rate 2×10^6 R/hr Cumulative dose 10^8 R

Camera Control Unit

Operating Temperature	-25°C to 50°C (-13 to 120°F)
Relative Humidity	0 to 95%

MECHANICAL SPECIFICATIONS

Camera Head:

Diameter	1.25" (32 mm)
Length	12" (305 mm)
Weight (including cable)	30 lb (14 kg)
Housing	Polished 316 stainless steel

Camera Control Unit:

Length	18.0" (457 mm)
Width	11.5" (292 mm)
Height	5.25" (133 mm)
Weight	33 lb. (15 kg)

Cable:

Length	125' (38 m)
Diameter	0.57" (14.5 mm)

Connectors:

Video and Sync	BNC
Head/CCU	Bendix LJT 06 RP 17-26P

RIGHT ANGLE VIEWING ATTACHMENT

Lamp	Low Voltage Halogen ANSI FCS (24 V, 150 W)
Mirror	45° front surface polished metal
Rotation Speed	1 RPM nominal
Diameter	1.25" (32 mm)
Length	9" (229 mm)
Length (incl. camera head)	21" (533 mm)
Weight	1 lb. (450 g)

Westinghouse Electric Corporation
Industrial and Government Tube Division
Westinghouse Circle
Horseheads, N. Y. U.S.A. 14845
Printed in U.S.A.

APPENDIX VII

This appendix consists of responses to the comments by reviewers of the draft report. Comments were provided by:

EGG/TIO	January 14, 1981
Bechtel, National	December 11, 1980
Bechtel, Northern	January 29, 1981
MPR Associates	January 7, 1981

B&W'S RESPONSE TO COMMENTS ON
IN-VESSEL INSPECTION BEFORE HEAD REMOVAL
(PHASE II REPORT)

Comments on meeting report (December 11-12, 1980) as prepared by EG&G dated January 14, 1981.

OBSERVATIONS

1. The purge system design must be modified (e.g., blowers should be downstream of HEPA Filters, etc.).

   Ans. Design will be modified to meet BNC requirements listed in Section II.A.

2. The water level system design in the Phase II report has been scrapped.

   Ans. Page 16 of the report provides a description of the water level system that was designed during the Phase II work. Based on concerns raised during the December meeting, it was decided to eliminate this system from the scope. Calculations made prior to and subsequent to the December 11 meeting has however convinced B&W and BNC that the bubbler system will work satisfactorily. Appendix I of the report lists the B&W documents which relate to the design of this system; specifically Nos. 32-1123476, 86-1123484 and 32-1123902.

   B&W will supply a system meeting the requirements in Section II.A.

3. A stackup clearance study to verify that the CRDMs can be removed with the missile shields in place should be performed.

   Ans. B&W has performed the tolerance stackup study. The tolerance stackup clearance shows that the motor tube can be removed from the reactor vessel in one piece with the missile shields in place, however, the leadscrew and the leadscrew support tube may have to be cut, if the control rod has been uncoupled in the normal manner and parked within the motor housing.

4. A clearance study should be performed to determine if burrs formed during plasma arc cutting operations could prevent, 1) latching on to the leadscrew for lowering, or 2) sliding the compression tube over the leadscrew for tensile separation.

   Ans. Further work with the plasma arc cutter has shown that the burrs generated are minimal, however, mockup testing will further evaluate this problem.

5. Design safety factors were not established.

   Ans. The design safety factor for most tooling has been established as 1.5. This has been applied as follows:

   a. Bolt removal tool - field experience has shown that 2500 ft/lbs of torque at the bolt is sufficient to strip the threads. The bolt removal tool has been designed for a torque of 3750 ft/lbs without exceeding yield.

   b. Stator lifting tool - this tool has been designed for a nominal lift of 1000 lbs. The tool is designed to handle 1500 lbs without exceeding yield.

   c. Push/Pull tool - the expected load on the push/pull tool is 25 tons to shear the pins. In test, the load needed to shear the pins was only 12 tons. The tool is designed for a load of 37½ tons with out exceeding yield.

6. B&W's engineering approach is to settle many of the design details during fabrication and testing of the hardware.

   Ans. B&W agrees that these developmental details are best settled as the prototype tools are fabricated and tested.

9. If the brazements are substantially damaged or if the leadscrew is stuck (won't move up or down) then the leadscrew pin shearing technique won't work.

   Ans. B&W agrees that damaged brazements could prevent operation of the shearing techniques by preventing entrance of the tool. Leadscrews which are stuck at or near the interface with the top of the active fuel should not themselves prevent utilizing this technique for separation leadscrews from control rods. Vertical moving of the leadscrews is not required in utilizing this tool except after pin shearing.

10. Under head plasma arc cutting of the leadscrews represents an alternate contingency method of non-destructive CRDM removal (this would take care of Item 9).

    Ans. The plasma arc cutting inside the head does represent another method at CRD uncoupling and removal. If approved, the in-head plasma arc cutter will be designed, built, and demonstrated in Phase III. However, the push/pull tool may also be required if none of the leadscrews uncouple in a normal manner and no open CRDM is available for installing the in-head plasma arc.

11. No studies have been performed to estimate the additional man-rem exposure costs of performing through head visual inspection prior to removing the missile shields and decontaminating containment.

Ans. B&W will record data during mockup testing to determine the estimated time required for each task. Since radiation surveys have been performed and many future ones are planned, calculations of man-rem exposures could be made. At this time, B&W does not anticipate performing these calculations since they are dependent upon field conditions.

12. DOE-HQ (H. Feinroth) - the Mockup (Phase III) should be realistically established that all rigging, CRDM removal and inspection operations are fully tested prior to performing work incontainment.

    Ans. It is B&W's intention to, as realistically as possible, establish that all rigging, CRDM removal and inspection operations are fully tested on a mockup. During the course of Phase III B&W expects significant input from the other participants in the demonstration of these techniques.

AGREEMENTS & COMMITMENTS

B&W will:

1. Write what they think the quality assurance program ought to be as input to Bechtel Northern.

   Ans. This information was forwarded to Bechtel and others on January 9, 1981, and again on March 11, 1981. Agreement has been reached between B&W and BNC relative to the QA program.

2. Refine the water level system and submit it to Bechtel Northern for review.

   Ans. At the February 5 meeting at BNC, B&W presented the "bubbler" water level measurement system and described how B&W will address previous concerns. Requirements were forwarded to B&W in BNC letter BLBW-0028 dated February 20, 1981. A new design is being prepared in accordance with these requirements.

3. Make a stack-up clearance drawing to assure that the push-pull tool can be maneuvered under the missile shields. If it can't, then redesign it.

   Ans. The stackup clearance has been analyzed and B&W is assured that the push-pull tool can be maneuvered under the missile shields in its present configuration. Further information will be found in our information package referenced in Appendix I of the report.

4. Assure that the leadscrews are captured so that they cannot fall into the core.

   Ans. B&W intends to make this an objective of our tool development. A conceptual design of this equipment has been prepared (See Chapter 4).

5. Review the Phase II review comments, revise and issue the Phase II report with subtitle changed from "Detailed Design" to "Tooling and System Design."

   Ans. This had been done.

B&W'S RESPONSE TO COMMENTS ON
IN-VESSEL INSPECTION BEFORE HEAD REMOVAL
(PHASE II REPORT)

Comments on Technical Integration Office review of Task Order #8 Phase II dated January 14, 1981.

A. GENERAL COMMENTS

1. Document doesn't address the ability of the camera manipulator to insert the camera into an occupied (i.e., leadscrew still in place) CR brazement.

   Ans. It was B&W's opinion during the Phase II design work that lowering the camera through a brazement with the leadscrew still in place would be very difficult. B&W did not address this in the Phase II work but B&W can mock-up this configuration and ascertain the capability in the mockup demonstration at the end of Phase III work. (not currently included in planned scope of work)

2. Figure 1-2, General Approach (block diagram) is incomplete. No reference to dummy flange covers, dummy nozzles, etc.

   Ans. Figure 1-2 has been changed to include these items.

3. Space and weight limitations - the only restrictions in the document are: (1) small enough to pass through the personnel airlock, and (2) less than 300 lbs. What about stairways? Can personnel really maneuver 300 lb. packages up the stairwells? If the packages are going to be hoisted, then what with, where in containment, and where are the lifting eyes on the skids? If moving "machines" (powered "Stair-Climber"?) are going to be used, what are they, where are they, commercially available, how much, etc.?

   Ans. The allowable weight has been changed to 150 lbs., which can be carried by two men into the building. If the configuration of 150 lbs. is such that two men cannot carry it up a stairwell, then arrangements will be made for a hoist (not current B&W scope, but identified as interface reuirement) to raise if from the personnel hatch area to the 347' level via the handling areas available with the removal of the deck plating.

4. "Shielding laydown area" - Whay constitutes "shielded"? How much shielding? How hot are the sources?

   Ans. The shielding requirements will be addressed during Phase III. B&W has the responsibility (pending change in scope of supply) for recommending shielding provisions associated with tooling equipment and removed reactor component storage.

A. GENERAL COMMENTS (cont'd)

5. "Tool Assembly Area" - Where? What level? How close to airlock or workstation? What about a contamination control area for handling CCTV cameras, lights, swipes, etc.?

   Ans. The tool assembly area will be designated in Phase III, however, Page 60, Item #11 describes the space needed on the 347' level. B&W will work with BNC/GPU to more fully define the specific requirements.

B. GAS PURGE SYSTEM

1. What "twice the average fuel assembly gas inventory?" What is basis?

   Ans. Twice the average fuel assembly gas inventory was used as a design basis because the burnup patterns in the core could result in higher gas inventory in fuel assemblies which received maximum burnup. The design basis assumes release of fission gas from one fuel assembly to constitute the maximum risk in this regard.

2. "Maintain a negative pressure...." How much? What range? What assumption? Basis?

   Ans. Report has been modified. The requirements for the gas purge system have been received from BNC and will govern the design.

3. The intent of the system is to provide in-flow of air to prevent uncontrolled release of radioactive gases and/or particulates. "Negative pressure" is a secondary consideration - Flow velocity is the controlling parameter.

   Ans. Report has been modified to reference the new criteria.

4. Use of the TC nozzles to withdraw air from the reactor head introduces a significant "choke" in the flow route. There is a 20:1 reduction in the flow path between the CRDM nozzle ($\sim$6 in.^{2}) and the TC nozzle ($\sim$0.3 in.^{2}).

   Ans. In order to decrease the pressure drop and increase the potential air flow allowance has been made to connect to as many as seven (7) thermocouple nozzles.

5. "....venting is (i.e., purged gas) to the containment atmosphere" (Page 9, Item 3) does not sound radiologically prudent if noble gases are involved.

   Ans. Per BNC requirements B&W will provide a flanged connection for interface with equipment supplied by others.

B. GAS PURGE SYSTEM (cont'd)

6. System makes no provision for change out or bagging of "hot" HEPA filters.

   Ans. The filter has been eliminated from the design per requirements in Chapter II.

7. HEPA filters require protection from condensate, sensible moisture, and high levels of humidity. The combination of heat, water, and pressure drop under the head will load the HEPA filters with water almost immediately. A moisture separator is mandatory.

   Ans. The filter has been eliminated from the design per requirements in Chapter II.

8. The use of a "vacuum" pump (ref. dwg; no engineering data supplied) sounds like a poor choice. The application requires high air flow not a vacuum capability. Suggest use of a blower.

   Ans. The current design anticipates the use of a ring compressor for air movement.

9. Placing the pumps and the "plumbing" panel between the reactor head and the HEPA filters provides a staggering amount of area and numbers of "crooks and crannies" for plateout and entrapment of particulates. Pumps and panel will become quite "hot". No unfiltered air should pass through either pumps or panel.

   Ans. The filter has been eliminated from the design per requirements in Chapter II.

C. WATER LEVEL SENSING SYSTEM

1. The "bubbler" type system specified will not function as shown. Reference pressure must be that under the head, not atmospheric pressure. Otherwise, the system measures the water head plus the pressure drop created by the purge system.

   Ans. The reference pressure will be taken under the head. However, the maximum pressure change while having one open CRDM to all open is less than 1" H_2O.

2. The pressure drop created by the purge system will vary from zero (i.e., purge system not operating) to some fairly high number. That variation will change frequently and rapidly. Can the "bubble" system respond rapidly enough to avoid false alarms?

   Ans. Response time is calculated in B&W Document 32-1123476, Rev. 1.

C. WATER LEVEL SENSING SYSTEM (cont'd)

3. What is system sensitivity? Accuracy? Range?

   Ans. The system sensitivity will be ±2", the accuracy ±2" and the range ±31".

4. How does the system readout, which is in containment, tie into the PCS water level control, located in the control room? Does the system have to be monitored in containment 24 hours a day?

   Ans. There is no connection between the level sensing system and the primary coolant system water level control. The water level sensing system must also be monitored when the vessel is open (i.e., open CRDMs) and workers are on station. Remote level indication is a proposed addition.

D. IN-HEAD LEADSCREW CUTTER

1. How is torch tip-to-work piece standoff established and maintained?

   Ans. The Phase II report described a design concept. The standoff distance will be determined and the tooling used to set it will be developed during the detail design in Phase III.

2. "Swing" control knob will only move torch through half the arc required. (Push-Pull Mechanism)

   Ans. The control will be designed to move the mechanism the full distance required.

3. Where is the leadscrew support sleeve in all this?

   Ans. The cutter will be positioned below the leadscrew support sleeve and above the guide tube.

4. How is lower portion of leadscrew supported to prevent it from dropping into the core? Not dropping the leadscrews is a requirement.

   Ans A leadscrew holding tool (see Fig. 1-4 in report) will be provided (pending approved change in scope of supply).

E. LEADSCREW PULLER/SEPARATOR

1. No supporting information/data supplied.

   Ans. As requested from the meeting, Appendix I, lists the packages of the support information.

   A brief description of the leadscrew puller/separator is presented for clarity.

E. LEADSCREW PULLER/SEPARATOR (cont'd)

The push/pull tool consists of three basic sections.

a) A push tube designed to fit around the leadscrew and push on the control rod spider hub.

b) A segmented nut designed to engage the existing threads on the leadscrew.

c) A hydraulic jack.

The segmented nut engages the leadscrew and the jack is used to pull up on the segmented nut. The leadscrew is prevented from rising by the push tube holding the spider hub down. This puts the leadscrew in tension. The pins holding the leadscrew together are the weak link and will shear as the axial load increases.

2. Effects of compressive column-loading on 16-foot pipe (up to 25 tons)?

   Ans. The pipe will be in compression and will be supported from collapsing by the leadscrew. To design the pipe to withstand this compressive force without the leadscrew support would increase its cross-section and make the design impractical.

3. Wing-nuts and attached 1/2 in. bolts are very long. Why? What do you use if you have to torque off the CRDM holddown bolts?

   Ans. These bolts have been deleted from the design.

4. How is locking sleeve (part #1) moved? Complete disassembly and reassembly of upper components? (Time consuming)

   Ans. The locking sleeve is moved by hand. The time to handle the upper components will be determined from the mockup.

5. Where is the center of gravity relative to the sling eyes?

   Ans. The center of gravity is on the center line.

6. The 1/8 in. down pins (2) used to limit engagement of the puller on the leadscrew should be heavier; they'll bend over with repeated use. How does operator know he's fully engaged and not just "hung up" on the threads?

   Ans. The dowel pins have been changed to 1/2 in. and the operator will know he is fully engaged when he has the ability to slip on the locking sleeve.

E. LEADSCREW PULLER/SEPARATOR (cont'd)

7. Is some anti-rotation necesssary to prevent the puller from turning the leadscrew (double helix, steeply pitched threads)? Or vice versa? No engineering data.

   Ans. The design is self-locking. Under the load the leadscrew will not rotate on the leadscrew puller assembly. The calculations supporting this are in B&W Document No. 32-1122507.

8. Why is a Type 304 collar used, when the report says it failed the tests?

   Ans. The 304 end collar did not fail the test but merely deformed slightly under the load. B&W has changed the material to a 416 SS to minimize deformation.

F. BOLT REMOVAL TOOL

1. Is this a modification of an existing design or is it totally new?

   Ans. This design is totally new.

2. No engineering data supplied; no explanation or illustration of the adapter for mounting paired torque multipliers (the plate is shown, but nothing else).

   Ans. The drawing has been modified. A description of the operation of the CRDM Bolt Removal Tool follows:

   The CRDM Bolt Removal Tool consists of three major parts; the bolt removal tool plate, main bolt removal tool, and the torque multiplier assembly. During bolt removal operations, the main bolt removal tool is assembled and lowered onto the bolt to be removed. The pilot on the bolt lifter on the main tool enters the bolt head first and aligns the tool. Depressing a plunger at the upper end of the tool unlocks the bolt capture mechanism and allows the tool to slip down and over the bolt. The plunger is then released and the bolt removal tool plate is now slipped over the top portion of the main bolt removal tool and secured to the service support structure by hand-tightened bolts placed in existing threaded holes. The torque multiplier assembly is mounted on top of the main bolt removal tool and inside the C-sleeve of the bolt removal plate. With all torque multiplier reaction bars resting against the reinforced sleeve wall, sufficient torque is applied to remove the CRDM bolts. After the bolt has been completely unthreaded, the bolt removal tool plate and torque multiplier assembly are removed. The main bolt removal tool is lifted to a level where the bolt may be disengaged and removed from the tool.

F. BOLT REMOVAL TOOL (cont'd)

3. Does the CRDM flange bolt have a recess for the "Bolt Lifter" to engage in? If so, show dotted on drawing.

   Ans. The recess is in the bolt. The drawing has been modified.

4. Why such a complex, one-off design for the lifting sling? The design is expensive to build, the sling cable will break just above the brazement, the small tabs welded to the tube won't take much load. Why not use: (1) commercially available hardware; (2) bolt the sling mounting into the block shown 2 in. below the current mounting position, and (3) leave the sling permanently attached?

   Ans. The design has been modified in accordance with suggestions made herein.

5. "Smear threads"? Won't the bolt head torque off instead?

   Ans. Field experience has shown that the bolts will not torque off as suggested.

G. STATOR LIFTING TOOL

1. No engineering or application information provided.

   Ans. Engineering data is referenced in Appendix I. A description of the operation of the stator lifting tool follows.

   The stator lifting tool consists of three major components: the lower, intermediate and top lifting plate assemblies. To remove a stator the intermediate lifting plate is slid up the lifting cables until it is directly under the top lifting plate and locked there. Both the plates are then laid on the service support structure near the opening for the stator to be removed. Using manipulator of the lifting cables, the lower lifting plate is maneuvered under the stator. The top lifting plate is attached to the crane and lifted to bring all lifting cables taut. Sufficient lifting force is now applied to free the stator and it is lifted to the limit of the crane beneath the missile shield. The intermediate lifting plate is positioned on top of the motor tube and the lifting cable locks on the intermediate plate are engaged. The top lifting plate is lowered, allowing all stator weight to be taken by the intermediate plate, and the top plate is removed from the crane. The intermediate lifting plate is then attached to the crane and the stator is lifted completely out of the service support structure.

G. STATOR LIFTING TOOL (cont'd)

2. Where is the center of gravity (CG) of the stator relative to the lower plate (Item 4)? Overturning problem?

   Ans. The stator is around the motor tube and overturning cannot occur. Once the stator gets to the top of the motor housing it may be guided by hand.

3. Why three lifting eyes (especially so closely spaced) on the top plate and only one on the intermediate plate? How is the handoff of rigging from one plate to the other handled since you can't set the stator down?

   Ans. Three lifting eyes have been provided to obtain an even vertical lifting force for the initial upstaging of the stator from the motor tube. The handoff of rigging from one plate to the other is accomplished by setting the plate on top of the motor tube once the cables are properly clamped to the upper plate.

4. Load rating and proof test on the clamped cables (intermediate plate)? Seems like a risky and expensive way to do it.

   Ans. The design has been modified.

5. Is this a modification to an existing design?

   Ans. This is a new design.

H. STRAIGHT SWIPE TOOL

Since this swipe tool has been deleted from the scope, response to these comments have not been prepared.

I. ARTICULATED SWIPE TOOL

1. Will the articulations allow the tool to reach the plenum cover and still clear the control rod guide tubes?

   Ans. Yes.

2. What is sampling ("Swipe") material? Cloth? Sticky "goo"?

   Ans. Cloth.

3. The cable loops are going to be difficult to use with gloves.

   Ans. Mockup testing will identify any problems.

I. ARTICULATED SWIPE TOOL (cont'd)

4. The articulation-control cables don't seem to be restrained such that they can lock a joint in the flexed position.

   Ans. Although not shown on drawing, cable length will be sized to lock in right position. This will be demonstrated on the mockup.

5. The insert and insert holder seems like an expensive creation. Since both parts are custom machined anyway, why not machine the connecting link as part of the insert (ball and post mushroom design)?

   Ans. The B&W design involves less machine work.

6. Will the hose clamp at the end of the tool create a snagging problem? It seems so.

   Ans. The design will be modified.

J. CCTV SYSTEM AND LIGHTS

1. Air-water interface in RV head will hamper viewing of plenum cover. Comment on Phase I report also.

   Ans. In field experience, B&W has found that air-water interface viewing can be accomplished by controlling the light intensity and the position of the light relative to the camera. B&W experience indicates that useful results can be obtained with good water clarity.

2. Will the 250-watt lights run in air? (Not if they have Lexan covers...)

   Ans. The 250-watt lights can be run in air provided one removes the lexan covers.

3. In the underwater light housing, how do you keep water out of the light socket and cable housing?

   Ans. Water is kept out by gasketing - to be suppled.

4. Video taping system should use two VTRs wired in parallel with a "splitter". If one VTR develops difficulty, (1) the proceeding exam is not recorded and must be repeated (2) you won't find out until you try to run the tape, and (3) you'll pay day's downtime for the delay while you buy another one.

   Ans. Two VTRs will be wired in parallel. (See Page 42 of the report).

J. CCTV SYSTEM AND LIGHTS (cont'd)

5. Table 5-2, Video Equipment: (1) 2 video tape recorders; (2) two extra batteries (minimum) for battery operated equipment; (3) at least one complete set of spare cables for connecting electronics equipment, and (4) at least two complete assemblies of each type of auxiliary light, plus spare bulbs.

   Ans. B&W agrees with this scope of supply. See Page 42 of the report.

6. Murky Water Viewing Attachment - No answers to previous questions and comments from Phase I review; technique not tested with complex parts like the top of a fuel assembly with a spider in it; 2-5/8 in. diameter housing won't fit in camera manipulator (interface with articulation swing clearance)?

   Ans. No complex parts were tested in the investigation of murky water viewing attachments which was similar to the top of the fuel assembly. However, in B&W's in-house demonstration, B&W was able to pick out various objects in the bottom of the test tank, such as a bolt or nut or similar workshop hardware.

   Fig. 6-2 better demonstrates how B&W will get the murky water attachment into the areas to be inspected. B&W will demonstrate this technique in the mockup.

K. CAMERA AND LIGHT MANIPULATOR

1. Does the winch provide the fine enough control over the angle of the arm to permit placement of the camera?

   Ans. Yes, it does.

2. Where is hinge pin detail? L/D ratio for hinge pins would seem to indicate that the hinge is susceptible to damage if force is applied at right angles to plane defined by main tube and articulated joint.

   Ans. While it is true the hinge pins would be susceptible to damage by a force applied at right angles to the center line of the pin - B&W demonstrated that a strong 200 lb. man could not bend the pin.

3. Exit/entrance hole for cable should not have a sharp breakout as shown (outside of 20^{0} hole in Part 3). Provide a generous radius to protect cable and forestall kinking.

   Ans. B&W has modified the manipulator as suggested.

K. CAMERA AND LIGHT MANIPULATOR (cont'd)

4. Why a square shouldered, 1/8 in. groove in Part 2? Why not taper the sides of the groove to facilitate the return of the cables?

   Ans. B&W has changed the drawing as suggested.

5. Are you certain that the camera can exit through the tilted tube? Can you rely on pushing it out via an 18 foot, 5/8 in. diameter cable?

   Ans. B&W believes that the camera can exit properly through the tilted tube. B&W has demonstrated this in tests with the prototype manipulator. The ability to push the camera with the cable must be demonstrated in the mockup or some weight may have to be added to the camera. B&W believes that no weight will be required.

6. Do the camera cable rollers conform to the minimum-bend-radius recommendations of the cable manufacturer? Why isn't there a cable roller at the top of Part 2?

   Ans. The small weight of the camera will not force the cable to bend under the rollers to conform to the minimum-bend-radius.

B&W'S RESPONSE TO COMMENTS ON
IN-VESSEL INSPECTION BEFORE HEAD REMOVAL
(PHASE II REPORT)

Comments in accordance with BNI's letter, R.O. Sandberg to G.E. Kulynych dated December 11, 1980.

GENERAL

The Phase II detailed design of inspection tooling and equipment does not appear to be complete or is not provided (design of the in-head leadscrew cutter, special leadscrew nut tool, special leadscrew lifting tool, leadscrew holding tool, leadscrew lowering tool, leadscrew support clamp, murky water viewing equipment, and under missle shield hoist was not provided).

The handling, packaging, storage, and disposition of removed components should be addressed. Any special shielded containers for removed leadscrews, and any special storage stands for removed CRDMs and components should be included.

Drawings provided with the Phase II report were preliminary with no approvals identified. No references to related drawings or documents were provided to identify interfacing dimensions and constraints. No detailed design information was provided (design criteria, specifications, design parameters, etc.) for most of the inspection equipment to allow a complete engineering review. A complete engineering review of the Phase II design documents should be completed prior to issuance of the final Phase II report and prior to initiating Phase III (fabrication).

Ans. Of the tools and equipment mentioned in the first paragraph, the murky water viewing equipment represents the only piece of hardware that was part of the scope at the beginning of Phase II. All of the remaining items mentioned were included in the scope (verbally) at the end of Phase II or were added during discussions with the principles in the week just prior to our December meeting. In most instances, only conceptual designs or even more fragmentary designs were available at the time of the submittal of this report. The need, for instance, of not allowing a severed leadscrew to drop into the core was discussed only briefly prior to our December meeting and only became an official requirement at that meeting. The conceptual basis of most of this tooling and/or equipment made it very difficult to provide many of the types of information asked for.

The murky water viewing equipment, however, was designed in sufficient detail to produce our Drawing 1121433E-00 which was part of the drawing package submitted in conjunction with this report.

The disposition of removed components was not addressed because B&W did not understand that it was intended to be part of Phase II scope. The results of the December 11 meeting have added these needs to B&W scope. Pages 55 and 56 of the revised report addresses B&W intentions in this area.

GENERAL (cont'd)

The drawings provided with the Preliminary Phase II report were also preliminary. B&W's intention was to provide preliminary drawings and preliminary report, receive comments and revise them in accordance with these comments.

Appendix I in the revised report lists the engineering data packages for our design and the appropriate drawings and sketches. B&W considered that the demonstration of acceptable design would be made on the mockup to be constructed in Phase III. This approach is used in our shop because of the very nature used to develop much of this tooling. In many instances, B&W felt it was cost effective to utilize their design methods as opposed to extensive engineering calculations.

The material packages of design information are catalogued and are available for review to any authorized reviewer.

B&W considered the December 11 meeting plus the preliminary drawings and report issued prior to the meeting to constitute a review of the Phase II work. This was similar to that which was followed in the conclusion of the Phase I work.

I. INTRODUCTION

A. General Approach

No inspection criteria or objectives are identified that justify the need to remove three adjacent CRDMs. Removal of a central CRDM will be more likely to provide more valuable data on fuel condition. Statements are made that identify "most desirable" locations, but no criteria are established for the necessary conditions for successful inspection. Statements are made that cameras will be lowered at "suitable locations" with no criteria for what is necessary.

Ans. The revised report, Table 1.1 identifies each of the inspection areas, the camera access route and the information expected to be obtained at that location. As stated at our December 11 meeting, the removal of three adjacent CRDMs at the periphery of the core is an objective. Three adjacent CRDMs will provide sufficient flexibility for camera entry and manipulation, general area lighting, and an additional spare nozzle should other probing be required during the course of this investigation at the peripheral of the core.

II. Radiological Boundaries

A. Purge System

1. Rather than maintaining a negative pressure under the reactor vessel head, a more appropriate functional requirement would be to maintain a minimum air inflow velocity through penetrations in the head.

   Ans. Refer to the revisions in the design criteria (Section II.A of revised report).

2. The criterion that the system connect to no more than four thermocouple nozzles is not justified.

   Ans. Refer to the revision in the design criteria (Section II.A of revised report).

3. The criterion that the system vent to the containment atmosphere might be justified by an assessment of the radiological hazards associated with release of radioactive gases into the containment.

   Ans. BNC has assumed responsibility for gas exiting from the purge system.

4. A system or device to regulate or control the head vacuum should not be required if purge system components are properly selected to accommodate all expected flow conditions.

   Ans. This matter will be resolved in the purge system design.

5. The criterion that the system provide an accessory connection is not justified unless the associated equipment to control airborne contamination from cutting operations is also provided with the system.

   Ans. The system will be redesigned. B&W will not include a provision for conditions of ex-head cutting gases.

6. The selection of components for the purge system does not appear to be appropriate; the two pumps listed are presumed to be vacuum pumps which may not provide sufficient purge flow volume, and the filter(s) shown on the purge system assembly drawing appears to be too small.

   Ans. The system will be redesigned per requirements in Section II.A.

7. The purge system filter(s) should be upstream of the blower(s).

   Ans. The system will be redesigned accordingly per requirements in Section II.A. Filters are not now part of the system to be supplied.

B. Other Radiological Boundaries

1. The permanent closure for the CRDM nozzle on the reactor vessel head should be designed to accommodate conditions to be experienced during recovery, such as RCS decontamination.

   Ans. B&W will supply flanges that are dimensionally similar to the code flanges. B&W will not perform any QA activities on these flanges and hence, B&W cannot certify these closures.

III. Primary Water Level Sensing System

Rather than stating that "the primary water level is critical, and it is important to monitor this level", the purpose of the system should be described (i.e., the primary water level is monitored to ensure that the level is high enough for shielding and low enough to allow operation of the head ventilation system, etc.). The existing statement is ambiguous.

The intended installation of the system after the water level has already been lowered does not appear appropriate.

Ans. The job of the water level sensing system was described at the December 11 meeting. We have revised our description to satisfy these needs (Section III). As stated at our review meeting in December, this level sensing system was not intended to provide data or information while the RC system water level was being lowered to the operational level for the work on in-vessel inspection. We had expected this lowering of the water level to have been performed by others and with other equipment. The purpose of this water level sensing system was to provide some backup protection for the personnel performing the inhead inspection.

A. System Functional Requirements

1. The range of water level to be monitored is not stated.

   Ans. The reference level will be established approximately 1 ft. above the plenum cover and operational variations of $\pm$ 6 in. would be allowable.

2. The required accuracy of the system is not stated.

   Ans. The required accuracy is $\pm$ 2 in.

3. The criterion that the system function below the missile shield is not justified.

   Ans. Based on many discussions with Bechtel/TIO/GPU during the course of the Phase II work, it became clear to B&W that this work (in-head inspection) might have to be performed without removing the missile shields. In fact, some expectation existed that the work might be advanced a year or more if it could be performed with the missile shields in place. A review of the tooling equipment needed to do the work revealed that with the exception of a hoist or crane, all the tools could be designed so that they could be used under the missile shield. This investigation indicated to B&W that it would be prudent to design the tools accordingly.

4. No redundancy criteria are established.

   Ans. As stated above, this water level sensing system is a redundant system.

5. The system may operate with varying pressure under the reactor vessel head.

   Ans. B&W agrees. Design will meet requirements in Section III.A.

B. System Description

1. The statement that "the pressure in the bubbler pipe is proportional to the difference in the water level and the level of the bottom of the pipe" does not take into account any pressure variations under the head.

   Ans. B&W agrees. Design will be modified to meet requirements in Section III.A.

2. The air supply to the system should be instrument-quality air rather than service air.

   Ans. BNC has assumed responsibility for air supply.

3. Please explain the air connection to the pressure indicator (the reference pressure should be under the head).

   Ans. This has been changed and pressure now referenced under the head.

4. The bubbler tube as listed (9/16" O.D. stainless tubing) may be difficult to obtain; 1/4" O.D. stainless tubing is suggested (easier to obtain and if redundancy is needed, both tubes will fit through one thermocouple penetration).

   Ans. The design has been revised to utilize 1/2" O.D. pipe with a 1/2" O.D. nipple. The drawings have been changed accordingly. Redundancy is not needed. B&W Document Number 32-1123902 evaluates the bubbler pipe clearance.

5. Steel or copper tubing may be more appropriate rather than PVC hose. Brass fittings and copper tubing for panel board connections may be more appropriate than stainless steel.

   Ans. B&W will meet requirements stated in Section III.A.

IV. CRDM Removal

A. Deviations from Phase I

1. The advantages of the proposed method for destructive CRDM removal may not be realized for removal of CRDM's that are not on periphery, since it may require removal of many CRDM's to provide access. The selection of the method for destructive CRDM removal (involving separation of the CRDM motor tube and nozzle and cutting the leadscrew support and leadscrew with plasma arc torch) does not appear to be appropriate without considering other feasible methods and weighing the advantages/disadvantages.

   Ans. The removal of CRDM's not on the core periphery will require the removal of many CRDM's to provide access. During Phase I and further in Phase II, B&W looked at eleven (11) different methods of separating the leadscrew from the control rods. (Pages 27 & 28 of the final Phase I report). It is possible that other potential separation methods are available which were not pursued. A study of other possible methods is included in the proposed C.O. #2.

2. The plasma arc in-head leadscrew cutter shown in the conceptual sketch cannot be installed or used under the missile shield.

   Ans. The plasma arc in-head cutter was only a concept. Final designed tool will fit under missile shield.

B. Normal CRDM Removal

1. The normal tooling that require decontamination to support the inspection program should be listed such as the CRDM lifting tool).

   Ans. The normal tooling is listed in Table 1.2 and the description on Pages 21 and 22 of the report.

2. The contingency tools that replace the leadscrew installation/removal tools have several disadvantages: 1) the special leadscrew nut tool apparently does not provide a restraint to prevent rotation of the leadscrew into the uncoupled position, and 2) the special leadscrew nut tool apparently does not provide for torque monitoring or control.

2. (cont'd)

Ans. The designs presented were only concepts. The leadscrew nut tool will be designed to prevent rotation. The operator can manually measure the torque by hand if needed during the use of this tool. Final design of this tool is included in the proposed C.O. #2.

C. Contingency Tooling

1. The statment is made that "the rod guide braze material could have begun to melt." This material was not identified, and the possible consequences that complicate leadscrew uncoupling or CRDM removal were not identified.

   Ans. If braze material melted, there is a possibility that the control rod guide brazements have become distorted. Access to the top of the control rod spider would be impaired.

2. The additional features provided by the new proposed CRDM Hold-down Bolt Removal Tool and Stator Removal Tool that are not provided by the existing tools were not clearly identified. No "torque multiplier" is apparent in the bolt removal tool design. These tools apparently cannot be installed or used under the missile shield.

   Ans. A "torque multiplier" is included in the design. A tolerance study has shown that these tools can be installed and used under the missile shield.

3. The plasma arc cutting system functional requirements to make required cuts in just a few seconds is not justified. Rate of cutting should be controlled to reduce burring and to reduce the potential for damage to other components.

   Ans. The use of a plasma arc cutting system was utilized because B&W performed some in-house testing of the system. During the course of this testing, B&W determined the speed that it took to do the cutting required. These cuts took but a few seconds. Since cutting time is related to man-rem exposure and since B&W had equipment which would cut quite rapidly, a conclusion of a requirement of short cutting times appeared obvious. No analyses was performed to ascertain the best cutting time but we merely utilized the times observed.

4. The requirement that the cutting system operate with 220 volt electricity is not justified, since equipment can be readily purchased for any conventional supply voltage.

   Ans. The cutting system will be designed to operate off 480 volt .

5. A means to provide remote torch positioning and indication should be provided.

   Ans. B&W expects to use the plasma arc cutter for all cutting external of the reactor vessel in a normal mode. The versatility of the equipment and the skill of the operators, B&W has observed has convinced B&W that this is the easiest and most effective method of operation. This is partly so because of the very short times required to perform the cutting.

6. A visual inspection of the cut leadscrew may be appropriate before attachment of the leadscrew pulling or lowering tools.

   Ans. Visual inspection will be incorporated into this procedure.

7. The relationship between the "plasma arc cutting system" and the "in-head leadscrew cutter" is not apparent.

   Ans. With the exception of the adaptors and the lead in cable and the tubing, the external hardware of both plasma arc cutting systems, should be the same.

8. The cables for the in-head vessel cutter should have registering calibration and locks to remotely position the torch.

   Ans. B&W agrees and a comparable design will be incorporated.

9. The purge system should be designed to accommodate the volumes and types of gases generated by the plasma arc cutting system.

   Ans. B&W's design will meet requirements in Section II.A.

10. The push/pull leadscrew separator apparently cannot be used below the missile shield (the separator is about twenty feet long).

    Ans. B&W's tolerance analysis has convinced B&W that the tool may be used below the missle shield.

11. The leadscrew puller should be tested to confirm that 1) the nut fingers can be expanded to fit over any burrs resulting from a plasma arc cut of the leadscrew, 2) the helical angle of the nut is self-locking on the leadscrew when the maximum pull force is exerted, and 3) the segmented nut can be remotely disconnected from the leadscrew.

    Ans. This will be done.

12. The possibility of shearing of leadscrew dowel pins at locations other than desirable should be addressed.

    Ans. There are only two leadscrew dowel pin locations under tension with the tooling described and shearing at either location is acceptable for plenum removal. Viewing of the top of a fuel assembly would be impaired if the upper pins failed. B&W has no plans to remove the lower leadscrew extension should the upper pins shear.

13. The inner diameter of the leadscrew puller does not allow room for burrs resulting from cutting.

    Ans. Experimentation with the plasma arc cutter has convinced B&W that the burr size can be kept to less than the .040" clearance available in the leadscrew puller. B&W has also been able to file off some burrs to improve clearances.

14. The stainless steel to stainless steel interface between the segmented nut and the spreader may gall.

    Ans. Design has been modified.

15. The spreader may need to be pushed down to allow segmented nut to close.

    Ans. This could be true, but the design should provide sufficient versatility to allow the operator such control.

16. The technique for positioning the cylindrical part over the segmented nut is not evident.

    Ans. This is a manual operation and will be detailed in the Phase III procedures.

17. The use of the leadscrew puller should be considered to provide the function of the leadscrew lowering tool, and redesigned accordingly.

    Ans. This would complicate designated tool operation.

18. The design of the stator lifting tool involves press fit of 304 stainless steel to 304 stainless steel which can lead to galling.

    Ans. B&W will redesign this press fit to eliminate this problem.

19. The leadscrew holding tool shown in Figure 4.4 will bind as soon as the tool arms move.

    Ans. Figure 4.4 was only a concept.

D. Contingency CRDM Removal Procedure

1. This procedure does not apply to CRDM's that are not on the periphery.

   Ans. The increased scope suggested at the December 11 meeting addressed the potential removal of all CRDMs with some or all of the various such tools provided in this task. These are in the proposed C.O. #2.

2. This procedure results in consecutive insertions and withdrawals of the control rod by about 2-1/2 to 5 inches.

   Ans. The procedure will allow the rods to move however rod movement is not required if the rods are stuck.

3. This procedure does not account for the contingency of a stuck leadscrew nut or stuck torque tube.

   Ans. This procedure will work if either the leadscrew nut operates or the torque tube can be released, The procedure will also work with stuck rods.

4. The size of the gap at the CRDM flange required for cutting should be defined in order to justify tooling design.

   Ans. Experimentation has shown that the 2-3/8" available gap will be sufficient for the cutting intended.

5. The method for removing the CRDM motor tube and leadscrew support is not addressed.

   Ans. The procedures developed in Phase III will address these details.

E. Operation with Missile Shields In-Place

No conceptual design or discussion of the auxiliary lifting hoist requirements were provided to justify operation under the missile shields. In addition, no tooling to support assembly of inspection equipment under the missile shields was described, such as clamps, tools supports, storage racks, etc.

Ans. An auxiliary lifting hoist as would be needed for working under the missile shields was suggested to be added to the scope at the December 11 meeting. The detailed design procurement and testing of this equipment can be accomplished in Phase III. This has been included in the proposed C.O. #2.

VI. Manipulators

1. The combination of a 21" long camera (with right angle viewing attachment) and a 25-1/2" long manipulator arm may result in problems with accessability and maneuvering of the camera.

   Ans. The potential for problems is recognized. However, based upon work to date, B&W believes there is sufficient room and maneuverability to allow this equipment to properly perform as intended.

2. Involvement of a manipulator manufacturer in the design of this tooling may be beneficial.

   Ans. B&W is designing the manipulator and manufacturing the parts. We are not subcontracting to a manipulator manufacturer.

3. The manipulator support tube aluminum to aluminum pipe threads may gall. A full penetration weld at the support tube flange may be more appropriate rather than a 1/4" fillet weld. The tolerances on the 5/8" diameter dowel hole and pin are not compatible.

   Ans. The weld has become modified as suggested. The hole in the flange will be made sufficiently large so that the dowel pin will easily fit inside thereof. The coupling material has been changed to stainless steel.

4. The murky water viewing equipment does not appear to be compatible with the manipulators.

   Ans. B&W's intended procedure for manipulating the murky water viewing equipment under the reactor head is described on Figure 6.2 in the revised report.

B&W'S RESPONSE TO COMMENTS ON
IN-VESSEL INSPECTION BEFORE HEAD REMOVAL
(PHASE II REPORT)

Comments on R.L. Rider letter to G.E. Kulynych dated January 29, 1981.

1. The need for radiological boundaries, especially the concept of a purge system, has not been adequately justified. Primary radiological protection to the workers will be provided by air packs/respirators as determined at the time; the Reactor Building Purge System will protect the public. A meeting to redefine functional requirements for this subsystem is suggested for January 27, 1981 following the proposed mockup meeting in Gaithersburg, MD.

   Ans. B&W will design system per requirements in Section II.A.

2. Duplication of existing tooling has not been adequately justified. The cost of new tools versus the cost of checkout and decontamination of existing tools was not evaluated. Duplicate tooling is not justified since this task is not scheduled for immediate implementation. In addition, some new tools have been proposed because of operating limitations imposed by the missile shields, even though some operations (e.g., complete with CRDM (with leadscrew) removal) will not be possible with the missile shields in place.

   Ans. It is not B&W's intent to duplicate existing tooling. As B&W understands the situation, GPU is expected to examine the tooling for normal CRDM removal which is presently in the TMI-2 building. This examination should determine if that tooling is satisfactory for the work on this task. B&W will not provide duplicate sets of tooling unless directed to do so.

3. Some of the proposed video equipment (video recorder, monitor, microphone etc.) can be deleted; these items are available through the data acquisition program.

   Ans. This equipment has been deleted from the scope.

4. The benefit of the murky water viewing system should be demonstrated or explained; light source requirements and the method identifying what is being viewed (with respect to the loss of reference points due to the proximity of the camera) should be defined. In addition, the murky water viewing assembly should be capable of functioning with the proposed manipulator.

   Ans. The murky water viewing system is intended to be used only if the turbidity of the water is such that the other viewing equipment does not produce satisfactory images. Experience by B&W with this type viewing equipment in various reactor coolant systems and spent fuel pools has illustrated that clarity of the water is

4. (cont'd)

essential to good pictures. The murky water viewing system is an innovation to provide a method which may allow the taking of some pictures in a dirty or murky reactor coolant system water environment. The light source will be the ETV-1250 internal lights. Figure 6.2 describes how B&W will manipulate this equipment under the reactor vessel head.

5. Detailed interface requirements (e.g., service air flow/pressure, water flow pressure/quality, shielding, vent gas removal system flow capabilities, hoist ratings, etc.) have not been provided.

Ans. B&W has received interface information requirements from BNC. B&W is currently working out a plan of action with BNC to provide the requested information.

B&W'S RESPONSE TO COMMENTS ON
IN-VESSEL INSPECTION BEFORE HEAD REMOVAL
(PHASE II REPORT)

Comments in accordance with MPR's letter, Noman Cole to D. Buchanan, January 7, 1981.

1. Remote Smear Sample Equipment

Remote equipment was proposed for taking smear samples from the top of the core and from the top plate of the upper plenum assembly. The stated purpose for these smear samples is to determine the activity level of the fuel and internal components, and accordingly, define any special handling provisions which may be required for the recovery effort. We do not believe this equipment is necessary or warranted, and it could potentially lead to problems. We believe that if smear samples are desirable, the CRDM leadscrews can be removed from the mechanisms and smears can be taken along their length. In this regard, it is not clear why such samples are needed or required. There have been fuel irradiation test loops in which oxide type fuel elements such as at TMI have undergone gross failures at much higher burnups and servicing of the test loops did not require ultraspecial handling methods. Basically, these test loops were handled with the normal service equipment which was used for handling unfailed fuel elements and that proved quite adequate.

Ans. Both the B&W and MPR proposed sampling methods will require special tools. A remote leadscrew sampling tool would be required because of potentially highly radioactive leadscrews.

B&W can supply one or both tools. B&W's current direction is to supply a plenum sample tool only. B&W believes that the developing of the sampling equipment is not a significant effort and that data from these samples will be useful.

2. Vacuum/Filter System for Continually Purging and Filtering the Reactor Vessel Head

In this regard, we believe that if each of the CRDMs is vented and purged to the plant's offgas system, it is not clear why the proposed vacuum/filter system is needed. If there is any question on whether all the noble gas has been removed from the reactor coolant system, repressurize and cycle the water level in the reactor head up and down a couple of times, then revent the mechanisms to confirm that noble gas is no longer a problem. In this regard, we have two comments:

a. To do an in-vessel inspection, B&W is proposing to lower the water down to below the reactor vessel flange while the inspections are being made. With this approach, the head may be dry for some time. We suggest that the water level not be lowered out of the head areas for these inspections.

Specifically, we would lower the water level just below the CRDM flange and then do the in-vessel inspection completely underwater. This would keep the head wet and avoid the issues raised by drying out the head and the upper portions of the reactor internals (i.e., release of airborne particulate matter). With this approach, the water level in the reactor vessel would only be lowered just prior to stud detensioning for hear removal.

b. If there is any question about the offgasing of the reactor coolant once it is depressurized, it is suggested (if it hasn't already been done) that a large size 10-30 gallon pressurised sample be taken from the TMI reactor coolant system. The same can then be depressurized and any gas collected and measured to determine what kind of offgas problems could be experienced during such operations as head removal.

Ans. During Phase I, B&W proposed a purge system to enhance the safety of inspection personnel. In Phase II, B&W established the requirement that the Purge System should prevent the release of gases and particulates (in the area of inspection personnel) in the event that a previously intact fuel assembly was ruptured. This requirement was established as a worst case assumption. This requirement has been accepted by all parties involved and has been reiterated in requirements provided to B&W for the design of the purge system. The MPR comment does not address this concern.

3. <u>Cutting of Control Rod Leadscrews and CRDM Housings</u>

Presently, the method for removing control drive mechanism shafts that are stuck involves (2) disconnecting the CRDM at the flange and raising the control rod mechanism up several inches and then cutting in air with a plasma torch, or (b) in the case of the non-scramming mechanism, actually cutting the mechanism housing itself just above the CRDM flange with a plasma torch. This operation is basically done in air and it will create some amount of airborne activity. Since plasma cutting normally works equally well underwater, consideration should be given to cutting stuck leadscrews for either a normal CRDM or for a non-scramming CRDM by going down through an adjacent CRDM port (i.e., one in which the leadscrew can be removed), and then cutting the adjacent stuck CRDM shaft. This would allow the cutting operation to be performed underwater and this should avoid any air-borne activity problems. This type of cutting operation may be a simpler task than the present approach. Accordingly, it is suggested that such underwater cutting operations be demonstrated in a mockup to confirm feasibility and practicality. Such underwater cutting operations may also be useful in cutting any stuck incore instruments so fuel assemblies can be removed.

3. (cont'd)

Ans. Cutting underwater could also cause airborne activity problems - specifically the production of radioactive gases and steam.

B&W has proposed an in-head plasma arc cutter (see Page 20 of the report) as part of C.O. #2. Both underwater and in air cutting can be evaluated during mockup testing. The actual procedure to be used can be determined after mockup testing.

4. Under the Head Examinations

The underhead examinations suggested by B&W all seem to be predicated on lowering the water level down to the reactor vessel flange level, and thus raise the question that particulate activity can be generated. This seems to be one of the reasons behind the development of the special head purge and vacuum/filter system that B&W has proposed. If the water level is maintained at some nominal distance below the CRDM flanges and thus the reactor head will not be dried out, it would eliminate this question and the need for the vacuum/filter system. If an in-vessel inspection is to be done before the head is removed, it can be done underwater just as many other reactor repairs have been successfully done historically.

Ans. B&W desires to keep the water level as high as practical. There is a tradeoff between the advantages of a high water level and the risk of spilling the primary coolant. B&W has therefore recommended that the water level be maintained one foot above the plenum cover.

Implementation of the MPR suggestion would allow very minimal water level changes. Also without a purge system workers would not be protected from potential noble gas release from a previously intact fuel assembly (see requirement 1 for the purge system, Section II.A.

5. Disconnecting Leadscrews on the Mechanisms

To obtain a rough assessment of the core quickly, it is suggested that we should first attempt to disconnect all the CRDM leadscrews. This should give one assessment of what the situation is regarding the core. For example, if most of the leadscrews can be released in the normal manner, it would be an indication that there is not gross distortion of internals or jamming of parts by loose pieces. For disconnecting these leadscrews, it is specifically recommended that a program be undertaken in mockups at Alliance where the hub of the control rod assembly is locked in place, and then procedures and techniques

5. (cont'd)

developed to allow the CRDM leadscrew to be disconnected from the hub. The procedures for disconnecting leadscres for both normal as well as non-scramming mechanisms should be developed by this program. There a number of disconnect approaches that have been built into these mechanisms, and therefore we believe that there is a very good chance that several techniques can be developed so that all the leadscrews can be disconnected from the hub of the control rod assembly without having t cut the leadscrew.

Ans. B&W agrees that such a rough estimate would be of value. Part of Task Order #8 mockup testing includes use of normal CRDM tools.

B&W recommends that in conjunction with the inspection task normal uncoupling of all drives by attempted. This recommendation has no current impact on Task Order #8 since implementation is not currently included in Task Order #8.

6. Availability of Crane

It would appear that one of the major efforts to gain early access to the reactor core should be in the reactivation of the polar crane (e.g., the crane is needed to lift the head). If at all practical, we suggest that "special" effort be made to see if the crane cannot be brought into service at an earlier date. It is out judgment from other types of problems we have experienced with reactors over the years and from failed fuel irradiation tests, the reactor head should be able to be removed in the normal manner provided that each of the mechanisms is properly vented. It is further our opinion that with the various disconnect techniques built into the CRDM, there is a very good chance of readily disconnecting all the leadscrews. If this can be done, then we would proceed immediately to remove the reactor head as soon as the crane is available and make an assessment of the core damage with the head off. We believe this approach will allow a better, quicker and more meaningful assessment with less problems with stuck or jammed tools than a through-the-head examination.

Ans. B&W agrees that a special effort should be made to refurbish the polar crane as soon as practical. The polar crane would simplify the inspection task.

B&W does however feel that early implementation of the inspection task is important and is the first step toward ultimate core removal. Sime of the advantages of early thru-head inspections are:

6. (cont'd)

1. This project will exercise all approval channels ultimately required for the large scale task of head removal.

2. An early look into the reactor vessel may show the degree of structural damage. This will enable better planning for head removal and core removal. This could reduce both cost and lead time on the core removal project.

   If the inspection shows considerable damage the tooling effort can be redirected and potentially save time and money during the core removal.