NOTICE
PORTIONS OF THIS REPORT ARE ILLEGIBLE.
It has been reproduced from the best available copy to permit the broadest possible availability.

GEND 022
Distribution Category: UC-78
TMI Supplement

DISCLAIMER

TMI-2 INFORMATION AND EXAMINATION PROGRAM 1981 ANNUAL REPORT

Technical Integration Office

GEND--022

DE82 012570

Published April 1982

EG&G Idaho, Inc.
Idaho Falls, Idaho 83415

Prepared for the
U.S. Department of Energy
Three Mile Island Operations Office
Under DOE Contract No. DE-AC07-76IDO1570

DISTRIBUTION OF THIS DOCUMENT IS UNLIMITED

ABSTRACT

The Department of Energy's Technical Information and Examination Program at Three Mile Island Unit 2 continued the research and development work begun on the Island in 1979. The work concentrated in seven major areas: instrumentation and electrical components; radiation and environment; off-site core examination; radioactive waste technology development; configuration and document control; waste immobilization; and reactor evaluation. Research and development work associated with the program aims toward communicating applicable information to the nuclear community. The program seeks to assist in resolving specific problems at TMI-2 and to stimulate interest in specific work activities, thus ensuring that the entire nuclear industry avails itself of the maximum amount of information possible.

FOREWORD

Future annual reports will be structured on a calendar-year rather than on a fiscal-year basis. To make the transition, this report covers the period between October and December 1980, not documented in the last annual report, as well as all of calendar-year 1981.

CONTENTS

ABSTRACT ii

FOREWORD iii

BACKGROUND 1

INTRODUCTION 1

Scope 1

Summary of Reporting Period Accomplishments 2

Data Acquisition Program 2
Waste Immobilization Program 3
Reactor Evaluation Program 3

DATA ACQUISITION PROGRAM 5

INSTRUMENTATION AND ELECTRICAL COMPONENTS 7

Scope 7

Accomplishments 8

Radiation Instrumentation and Effects 8
Self-powered Neutron Detectors 10
In Situ Testing 13

RADIATION AND ENVIRONMENT 16

Scope 16

Accomplishments 16

Primary Systems 16

Purification System Samples 17
Reactor Coolant System Liquid Samples 18
Reactor Coolant System Sludge 18
Reactor Coolant Bleed Tank Samples 20
Fuel Deposition Determination 20

Reactor Building and Support Systems 20

Air Cooler Samples 26
Reactor Building Sump Samples 27

Surface Deposition and Environment 30
Accident Evaluation 34
Decontamination Effectiveness Evaluation 38

Reactor Building Entry Summaries 38

Entry 3 38
Entry 4 38
Entry 5 38
Entry 6 39
Entry 7 39
Entry 8 40
Entry 9 40
Entry 10 40
Entry 11 42
Entry 12 43
Entry 13 43
Entry 14 43
Entry 15 44
Entry 16 44
Entry 17 44
Entry 18 45
Entry 19 45
Entry 20 46
Entry 21 46
Entry 22 46
Entry 23 46
Entry 24 46
Entry 25 46
Entry 26 46

Dosimetry and Instrumentation 47

OFF-SITE CORE EXAMINATION 48

Scope 48

Accomplishments 48

RADIOACTIVE WASTE TECHNOLOGY DEVELOPMENT 49

Scope 49

Accomplishments 49

Preparation and Shipment 49
Gas Sampling 50
Visual Examination 50
Core Sampling 50
Liquid Analysis 50
Gamma Scans 51

CONFIGURATION AND DOCUMENT CONTROL 53

Scope 53

Accomplishments 53

Document Control 53
Publications 54

WASTE IMMOBILIZATION AND REACTOR EVALUATION PROGRAMS 57

WASTE IMMOBILIZATION 59

Scope 59

Accomplishments 59

High Integrity Container Development 59
Ion Exchange Technology 62
Accident Radioactive Waste Volume Reduction Studies 62
Zeolite and Resin Disposition Technology 64
Zeolite Vitrification Demonstration 64
Organic Vitrification 68

REACTOR EVALUATION 71

Scope 71

Accomplishments 71

Pre-Head-Removal Core Damage Assessment 71

Core Damage Assessment Through the In-core Calibration Tubes and Instrument Strings 74

Reactor Evaluation System 74
Reactor Disassembly and In Situ Data Acquisition 75

TMI-2 Core Status Summary 75
Defueling Source Terms 78
Borated Water Effects 78
Development of Canisters for TMI-2 Fuel 78
Fines and Debris Vacuum Collection System 78
Contingency Plenum Removal 80
Fuel Accountability 80

Mockup Facilities 81

CONCLUSION 83

CONCLUSION 85

FIGURES

1. Relatively undamaged control rod drive mechanisms and associated cabling on the 347-ft elevation 7

2. Corrosion and rust damage to polar crane motor and associated drive mechanism 8

3. Area radiation monitor HP-R-211 as received at SNL 9

4. Area radiation monitor HP-R-211 printed circuit board 9

5. HP-R-211 multivalued readout 10

6. Charge converter YM-AMP-7023 as received at SNL 11

7. Gouges in charge converter potted device resulting from the removal of the MOS transistor ... 11

8. Backup recorder's tracing of in-core detector signals 12

9. SPND measurement system block diagram 12

10. Engineer performs an instrumentation in situ test 13

11. Reactor and auxiliary building sample points 17

12. General radiation levels on 305-ft elevation 21

13. General radiation levels on 347-ft elevation 22

14. Beta radiation levels on 305-ft elevation 23

15. Beta radiation levels on 347-ft elevation 24

16. Surface contamination beta radiation levels 25

17. Polar crane radiation map of surface deposition 26

18. Bottom portion of water and sludge sampling device 28

19. Portable gamma spectrometer 32

20. Gamma spectrometer measurement locations and readings on 305-ft elevation 33

21. Surface sampler used to obtain concrete and metal core samples 34

22. Surface sample locations on 305-ft elevation 35

23. Surface sample locations on 347-ft elevation 36

24. Damaged telephone on 347-ft elevation 37

25. Burned and unburned rags inside the head storage area 37

26. Technicians entering reactor building personnel airlock 2 39

27. Damaged enclosed stairwell door on 305-ft elevation 40

28. Water in reactor building basement as seen from the open stairwell 41

29. Technicians removing outer shoe covers at entrance to contamination-controlled area 42

30. Technician performs radiation survey on control rod drive mechanism service structure platform 43

31. Technician inspects polar crane 44

32. Single-level sump sampling device 45

33. Corroded mechanical snubber on 305-ft elevation 45

34. EPICOR II PF-16 liner loaded for shipping 49

35. Three layers of PF-16 core sample (magnified) 51

36. High integrity container burial system 60

37. Cutaway view of the high-integrity container 61

38 TMI-2 Submerged Demineralizer System 63

39. Prototype gas sampler system 65

40. Prototype gas sampler on-liner installation 66

41. Zeolite vitrification system 67

42. Vitrified waste canister 68

43. Laboratory-scale organic vitrification system 70

44. Pre-head-removal in-vessel inspection access routes 73

45. In-core instrumentation locations 75

46. In-core instrumentation string orientation 76

47. Single multiapplication canister for TMI-2 fuel and debris 79

TABLES

1. 1980 in situ test results and current removal status 14

2. Electrical component and discrete device in situ testing 15

3. TMI-2 MU-F-5B filter debris sample gamma analysis 18

4. MU-F-5B filter debris sample emission spectroscopy analysis results 19

5. Results of typical reactor coolant system liquid samples 19

6. Estimated total activity of ^{60}Co and ^{144}Ce insolubles in RCB tanks A and C 20

7. Radionuclide activities found on the reactor building air coolers 26

8. Results of the TMI-2 reactor building basement water sample analysis 29

9. TMI-2 sump liquid sample radionuclide activities 29

10. TMI-2 sump sample 8 insoluble radioactive isotopes 30

11. Insoluble elements measured by neutron activation analysis in TMI-2 sump Sample 8 30

12. ^{129}I found in TMI sump samples 30

13. Gamma ray analysis decontamination factors 31

14. PF-16 gas sample analysis results 50

15. Radionuclide concentrations in the PF-16 liquid sample 51

16. PF-16 preliminary liquid analysis results 52

17. TI&EP GEND publications to December 31, 1981 54

18. Makeup of feed mixture for zeolite vitrification 66

19. Full-scale nonradioactive zeolite demonstration test results 69

20. Summary of minimum, reference, and maximum point core damage estimates 77

TMI-2 INFORMATION AND EXAMINATION PROGRAM 1981 ANNUAL REPORT

BACKGROUND

The Three Mile Island Unit 2 (TMI-2) accident of March 28, 1979, while resulting in only limited radiation exposure to the population surrounding the power plant, caused extensive damage to the plant itself, and was one of the most severe integral tests of nuclear plant safety philosophy and safety system performance ever encountered in a commercial light-water reactor.

The uniqueness of the TMI-2 plant in its postaccident condition provides unprecedented opportunities to acquire information of benefit to nuclear power technology. The information available from TMI-2 will enhance plant safety, reliability, and knowledge of light-water reactor accident-sequence effects in a way not available through normal research, development, and test programs. Recognizing this opportunity, four organizations, the General Public Utilities Corporation (GPU), the Electric Power Research Institute (EPRI), the U.S. Nuclear Regulatory Commission (NRC), and the U.S. Department of Energy (DOE), collectively identified by the acronym GEND (from the initial letters of their names), established a TMI-2 Technical Information and Examination Program and signed a Coordination Agreement to implement this program. The Coordination Agreement identifies the objectives to which the signatories subscribe, and defines, in broad terms, methods to achieve these objectives. The DOE Technical Integration Office (TIO) is responsible for the implementation and management of TI&EP activities.

INTRODUCTION

Originally, the TMI-2 Technical Information and Examination Program (TI&EP) focused on collecting, analyzing, distributing, and preserving the significant information available from TMI-2 that would generally improve light-water reactor safety, reliability, regulation, and operation. However, as the information obtained from the program activities was analyzed, unique opportunities for research development of nuclear accident recovery technology became apparent and was recognized in the Reagan Administration endorsement of an expanded DOE role at TMI (Letter, Edwin Meese III, Counsellor to the President, to Governor Richard Thornburgh, Commonwealth of Pennsylvania, "Review of Government Role in the Cleanup at TMI-2," October 19, 1981). In light of these program developments, the scope of the DOE TI&EP was expanded and reorganized into the Data Acquisition Program (DAP) and the Waste Immobilization and Reactor Evaluation (WIRE) Programs. This change in scope allows the TIO to conduct research and development (R&D) activities to effectively exploit the generic R&D challenges at TMI-2. The conduct of these activities also supports the TMI-2 cleanup and removal of the damaged core. The DOE R&D activities include provisions for removal, packaging, and shipment of abnormal wastes; early access to the core to assess the extent of the damage; and the development of procedures and technology to effect core removal, packaging, and shipment of selected samples to a DOE site for examination.

Scope

The Data Acquisition Program is a continuation of the original TI&EP. The general objectives of the DAP remained essentially unchanged but the program elements were restructured with some elements of the original TI&EP placed in the Waste Immobilization and Reactor Evaluation Programs. The DAP objectives include: (a) acquiring information to improve understanding of the accident itself including the response and survivability of the

TMI-2 power plant components, systems, and materials through examination of equipment and assessment of hydrogen burn damage; (b) developing appropriate new accident cleanup technology for evaluating plant, system, and equipment decontamination performance; and (c) understanding fission product transport through development of a radionuclide mass balance and source terms for the TMI-2 accident. The elements of the DAP include Instrumentation and Electrical Components, Radiation and Environment, Off-site Core Examination, Radioactive Waste Technology Development, and Configuration and Document Control.

The Waste Immobilization Program is a new program resulting from the DOE expanded role at TMI, as reflected in the memorandum of understanding reached with the NRC in July 1981. The Waste Immobilization Program, an expansion of the original TI&EP Radioactive Waste Technology Development Program, aims to evaluate and implement technology for safe, cost-effective handling, shipping, and disposing of contaminated wastes unsuitable for commercial land disposal. These wastes include but are not limited to highly loaded EPICOR II ion exchange media and Submerged Demineralizer System zeolites. The elements of the Waste Immobilization Program include short-term projects, zeolite disposition, and resin disposition.

The Reactor Evaluation Program, also a result of the DOE's expanded charter, will acquire data during defueling to complement data obtained in offsite examinations. The Reactor Evaluation Program is an expansion of elements from the original TI&EP Core Examination Program. The Reactor Evaluation Program aims to acquire data and develop technology during the core access and removal operation. Specific objectives include performing pre-head-removal core damage assessments; providing the capability to conduct in-vessel inspections, documentation, and sampling; providing technology development activites for reactor vessel head, upper plenum, and core removal and examination; packaging, shipping, and removing fuel debris for R&D examination; and providing a mockup facility to support reactor evaluation activities. The elements of the Reactor Evaluation Program include pre-head-removal core damage assessment, reactor evaluation system, reactor disassembly and in situ data acquisition, and mockup facilities.

The information obtained from the TMI-2 programs may be directly applied to several areas. These include resolving specific safety issues and licensing concerns; modifying applicable standards, specifications, and regulations; defining changes in design, maintenance, operation, and personnel training; and advancing technology in decontamination, radioactive waste immobilization and disposal, system requalification, damaged fuel handling; and plant, reactor, and safety engineering.

The Electric Power Research Institute (EPRI) is responsible for tasks in the areas of primary system decontamination, mechanical components survivability, and pressure boundary requalification. EPRI will report these portions of the program separately.

Summary of Reporting Period Accomplishments

Significant accomplishments which meet overall program objectives and highlights of other significant accomplishments are summarized in this section.

Data Acquisition Program. The significant accomplishments in the Data Acquisition Program are as follows:

- Completed testing and analysis of area radiation detector HP-R-211 and associated cabling
- Completed testing and analysis of loose parts monitoring system charge converters
- Completed analyses of self-powered neutron detectors response to accident temperatures
- Implemented a program to transfer instrumentation and electrical program information to the nuclear industry
- Obtained and analyzed sump water samples from the reactor building basement
- Obtained and analyzed samples of makeup system filter 5B debris

- Obtained gamma spectra scans of the reactor coolant bleed tanks, reactor building air coolers, and 305-ft elevation floors

- Planned and developed a large-scale decontamination experiment

- Obtained numerous concrete and metal core samples to support surface deposition characterization

- Evaluated and calibrated existing portable survey instrumentation

- Implemented hydrogen burn damage assessments

- Provided support for the reactor building entry program, including preparation for the large-scale decontamination experiment and the polar crane inspection

- Shipped EPICOR II prefilter PF-16 to Battelle Columbus Laboratories and performed preliminary characterization.

Waste Immobilization Program. The significant accomplishments in the Radioactive Waste Technology Development/Waste Immobilization Program are as follows:

- Designed a high-integrity container capable of retaining such liquid and solid wastes as the EPICOR II resins for 300 years

- Supported Submerged Demineralizer System processing by recommending the proper mixture ratio of zeolites in the ion exchange media (based on DOE-sponsored research)

- Conducted successful nonradioactive zeolite vitrification demonstration

- Reached agreement with DOE, GPU, and NRC outlining responsibilities for shipping highly loaded SDS liners and EPICOR II prefilters for R&D and disposition

- Accomplished the transition from the Radioactive Waste Technology Development Program to the broader-based Waste Immobilization Program by developing and defining the scope of the new program.

Reactor Evaluation Program. The Core Examination/Reactor Evaluation Program concentrated on early core access and on engineering studies to support reactor disassembly and core examinations. The significant accomplishments of the Reactor Evaluation Program are as follows:

- Developed examination equipment and contingency access tooling for through-head examinations

- Completed an integrated evaluation of the potential range of core conditions incorporating existing data and analytical studies

- Performed a study of the design basis for fuel and core debris canisters

- Evaluated concepts of equipment and methods for reactor disassembly

- Accomplished the transition from the Core Examination Program to the broader-based Reactor Evaluation Program by developing and defining the scope of the new program.

INSTRUMENTATION AND ELECTRICAL COMPONENTS

The proper functioning of instrumentation and electrical equipment during and after an accident is critical for safe control and operation of the plant. The events of March 28, 1979 at TMI Unit 2 subjected the electrical equipment to an actual accident environment. Equipment environments included a wide range of temperature, radiation, and wetting conditions, depending on their location within the reactor building. Figures 1 and 2 show the contrasting effects of the various environmental conditions at different reactor building locations. Equipment failures occurred during and shortly after the accident, and during the long-term cold shutdown period. These accident and postaccident conditions provide the unique opportunity to gather reactor safety-related information previously unavailable to the nuclear industry.

Scope

The overall objective of the Instrumentation and Electrical (I&E) Program is to assess the ability of specific safety-related I&E systems to perform their intended functions during and after an accident, and to transfer the information and technical evaluations to the nuclear industry. Data collected and processed from the TMI-2 instrument systems will provide valuable information concerning the adequacy of systems and equipment to meet accident conditions, qualification procedures, current instrument standards, plant construction controls, and plant operating and maintenance procedures.

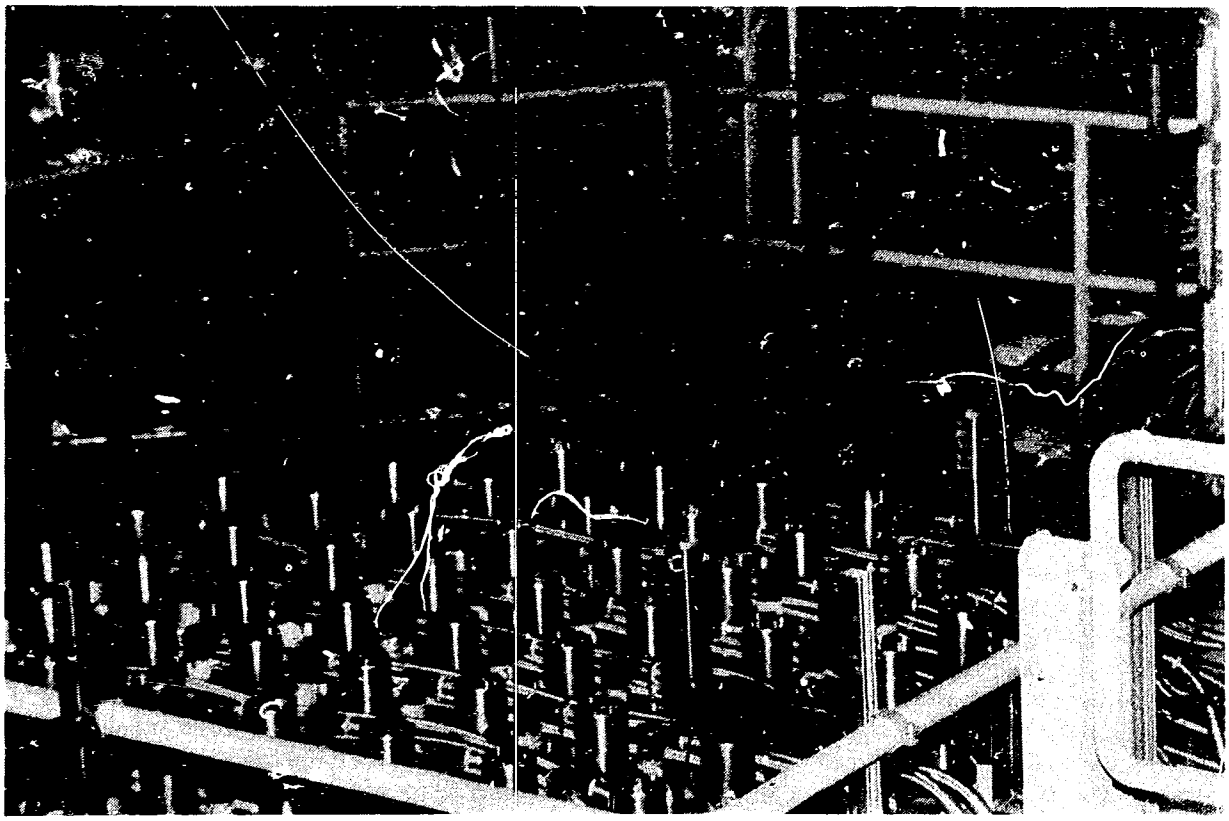

Figure 1. Relatively undamaged control rod drive mechanisms and associated cabling on the 347-ft elevation.

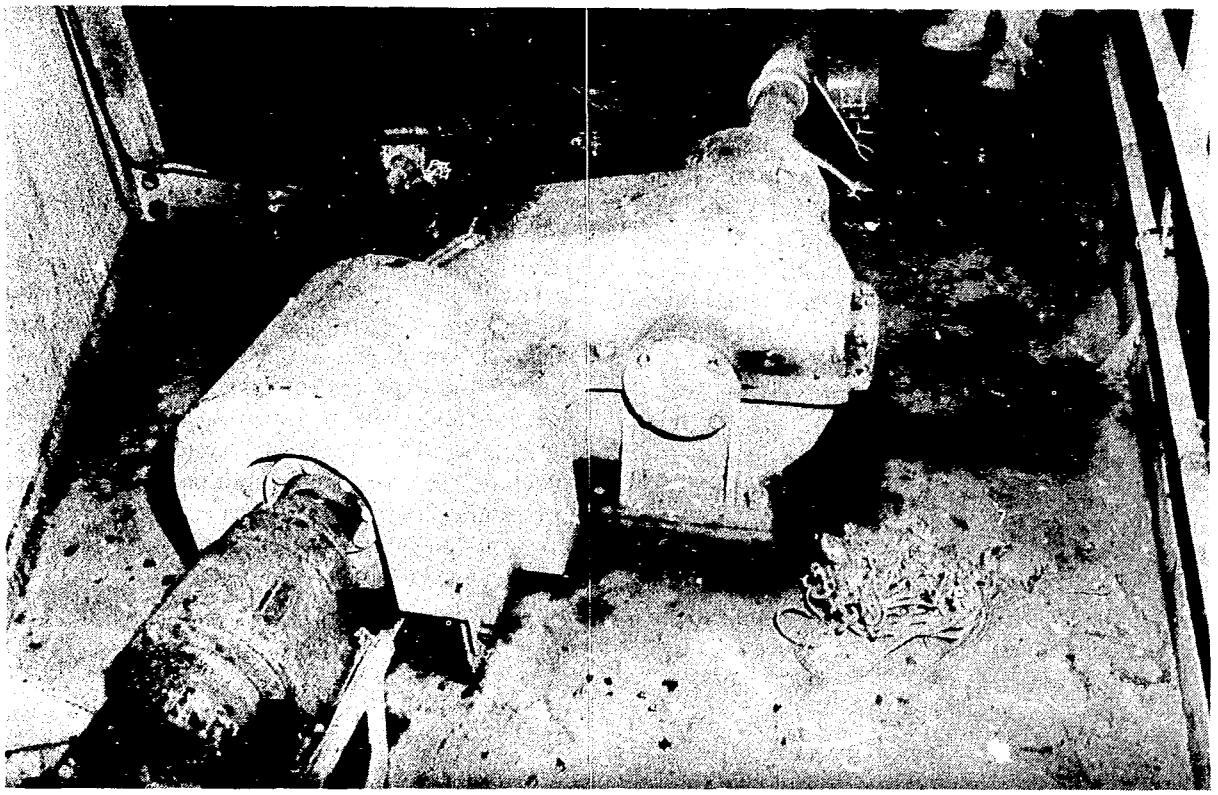

Figure 2. Corrosion and rust damage to polar crane motor and associated drive mechanism.

Accomplishments

During the reporting period, the major efforts were to finalize the in situ tests and removal procedures, remove certain components, define the offsite test and examination objectives, and transfer information to the nuclear industry. I&E engineers conducted investigations in the following areas: radiation instrumentation and effects, thermocouples and self-powered neutron detectors, resistance temperature devices, pressure transducers, and electrical components and discrete devices.

In 1981, the I&E program was fully implemented and a coordinator was assigned to provide technical information exchange with the nuclear industry. An engineering team was assigned at TMI-2 to coordinate with GPU the I&E in situ testing and removal of selected equipment from the reactor building. The team also provides the onsite data collection, logistics, and technical support.

A Technical Evaluation Group (TEG) was established to provide feedback to the program from industry on the results of the I&E program. This feedback will provide the program with industry input and suggestions. This group consists of 10 volunteer professionals who collectively represent the GEND members. They are affiliated with engineering construction firms, utilities, the Oak Ridge National Laboratory (ORNL), an engineering consulting firm, and several Institute of Electrical and Electronic Engineers (IEEE) standards committees. The group was first convened in August 1981 and meets every two to three months.

Radiation Instrumentation and Effects. Sandia National Laboratory (SNL) was assigned to test and analyze certain TMI-2 radiation detectors and determine the radiation effects on certain circuit components and cable specimens removed from the TMI-2 reactor building. The following have been removed from the TMI-2 reactor building for examination: two area radiation monitors, two loose parts monitor (LPM) charge converters, a source range neutron channel preamplifier, and a multiconductor cable specimen.

One of the area monitors, HP-R-211, has been completely examined. Figure 3 shows the HP-R-211

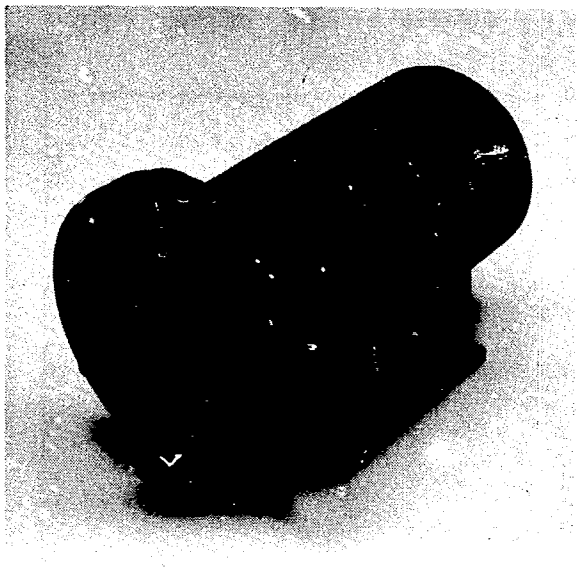

Figure 3. Area radiation monitor HP-R-211 as received at SNL.

as received at SNL. A malfunction of the output drive transistor was suspected during in situ testing and was confirmed during examination of the circuitry. Figure 4 shows the HP-R-211 printed circuit board. The transistor failure was caused by a short between the 600-V anode and the signal output. The probable cause of the short was reactor building spray water entering the detector cable backshell. Two factors apparently contributed to this: first, the detector assembly was mounted with the connector on top, so water drained toward it; and second, the backshell was not properly tightened.

Further examination of this detector (after replacement of the failed transistor) revealed multivalued output behavior above about 10 R/h, a level well beyond the instrument's designed exposure range. This output behavior was caused by a detector-cable impedance mismatch, and interaction between two circuits. Figure 5 shows the multivalued readout data. Curve A shows a test detector's response to a ^{60}Co source when a short cable connected the detector to the ratemeter. Curve B shows the test detector's response when 498.7 ft of coaxial interconnect cable connected the detector to the ratemeter. Curve C gives the actual HP-R-211 response when 498.7 ft of coaxial interconnect cable connected the HP-R-211 to the ratemeter. The response is multivalued when long cables are used, especially for the HP-R-211 detector. Suggestions for circuit changes were published in GEND-INF-008, *Quick Look Report on HP-RT-0211 Multivalued Behavior*, July 1981.

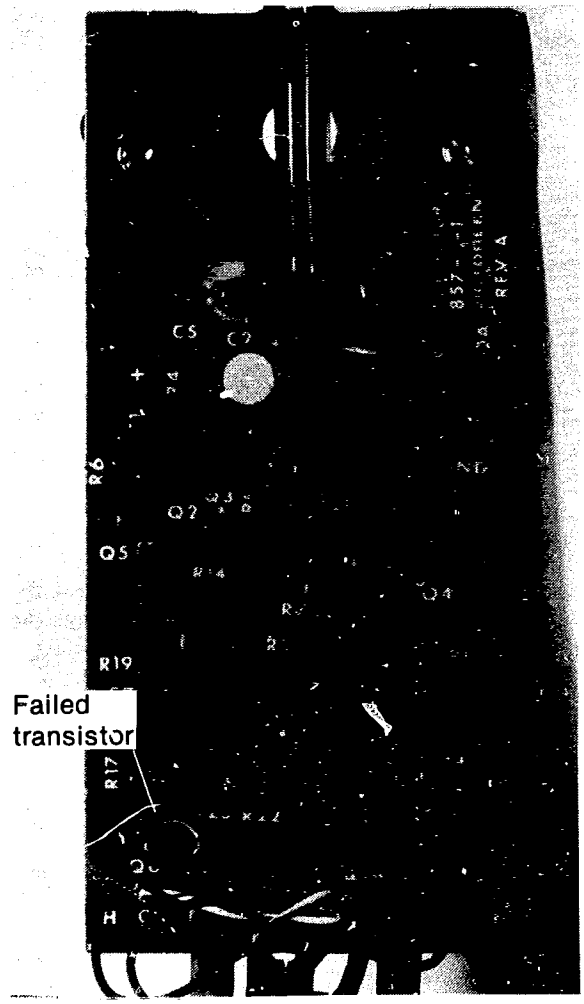

Figure 4. Area radiation monitor HP-R-211 printed circuit board.

A short length of cable and the connector attached to the failed area monitor HP-R-211 were evaluated for radiation-induced insulation damage. The results show that the radiation dose received was not enough to alter physical properties of the insulation. During resistivity testing, SNL noticed variations between different colors of irradiated insulation from Unit 2 samples which exceeded variations between both irradiated and nonirradiated insulation of the same color not taken from Unit 2. These color/resistivity differences do not affect the usability of the cable. Overall, testing concluded that on the basis of present electrical characteristics, the cable is essentially undamaged.

The charge converters examined, YM-AMP-7023 and -7025, were used at TMI-2 to amplify small signals from piezoelectric transducers in the loose parts monitor (LPM) system. Figure 6 shows charge convertor YM-AMP-7023 as received at

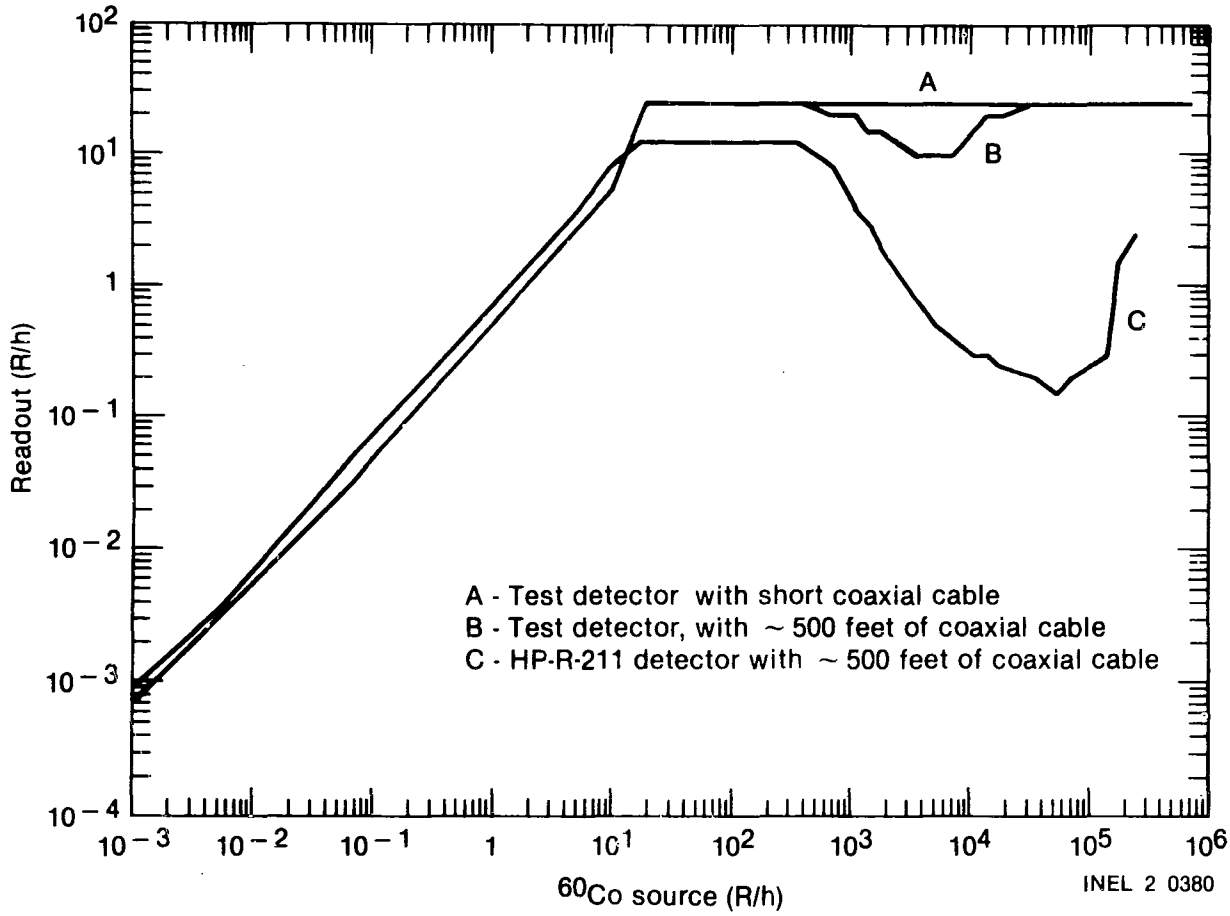

Figure 5. HP-R-211 multivalued readout.

SNL. The examinations found the charge converters had failed during the course of the accident due to high radiation levels in the reactor building. A metal oxide semiconductor (MOS) field-effect transistor in the converter was removed and examined. Figure 7 shows the area of the charge converter potted device from which the faulty MOS transistor was removed. The examinations showed the MOS transistor was degraded by radiation until it failed at approximately 10^5 rd. These results were communicated to the nuclear industry via Nuclear NOTEPAD[a] message in November 1981 and to the device manufacturer. The manufacturer of these charge converters and two other firms who supply LPM systems to the industry have either redesigned their circuits or designed new ones, primarily in response to the I&E Program findings.

a. Nuclear NOTEPAD is a computer conferencing system among nuclear utilities, including the Nuclear Safety Analysis Center (NSAC)/Institute of Nuclear Power Operation (INPO) and the TMI Technical Integration Office.

Source range channel preamplifier NI-AMP-2 was removed and examined in an attempt to find the cause of erratic gain variations observed in source range channel 2. The variations in this channel were observed shortly after the accident, while source range channel 1 continued to function normally during the same period. No electrical problems were found within the channel 2 preamplifier. It was compared electrically with the TMI-2 spare preamplifier, and both units were disassembled and inspected for physical damage. Since no problems could be identified from these tests and inspections, the problem might have been in the cabling or connectors, or caused by loose screws on the gain select jumper bar. These components will be further examined in the future. The inspection did reveal, however, an improperly sized resistor in a circuit in the spare unit. This finding was reported to the manufacturer.

Self-powered Neutron Detectors. EG&G Idaho's Electrical Engineering Division at the Idaho National Engineering Laboratory (INEL)

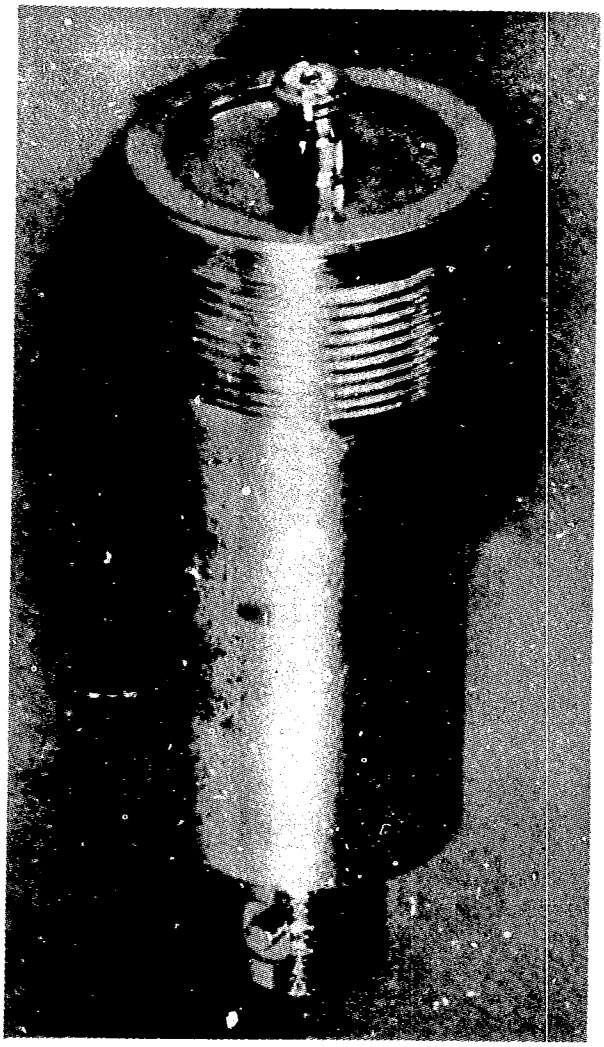

Figure 6. Charge converter YM-AMP-7023 as received at SNL.

conducted an analysis of the self-powered neutron detector (SPND) measurement system response to temperature during the TMI-2 accident. The study evaluated the SPND measurement system to determine its ability to provide a temperature-versus-time profile of nearby fuel rods in the TMI-2 reactor core during the accident. Figure 8 shows a plot of typical SPND data as recorded on backup stripchart recorders. The plot covers the time period through reactor scram (neutron flux to zero) to the point where core uncovering occurred and the SPND thermal response caused the signal to become erratic.

The SPND system was characterized into a functional block diagram as shown in Figure 9.

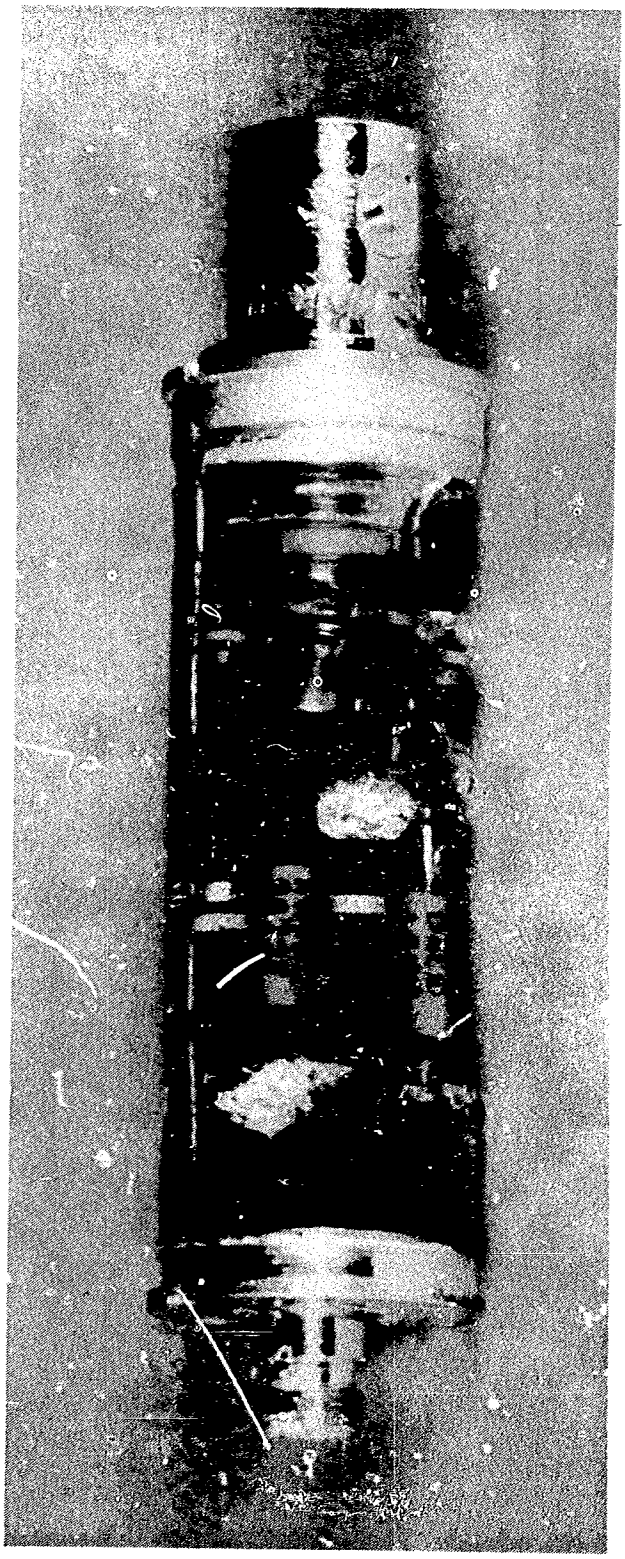

Figure 7. Gouges in charge converter potted device resulting from the removal of the MOS transistor.

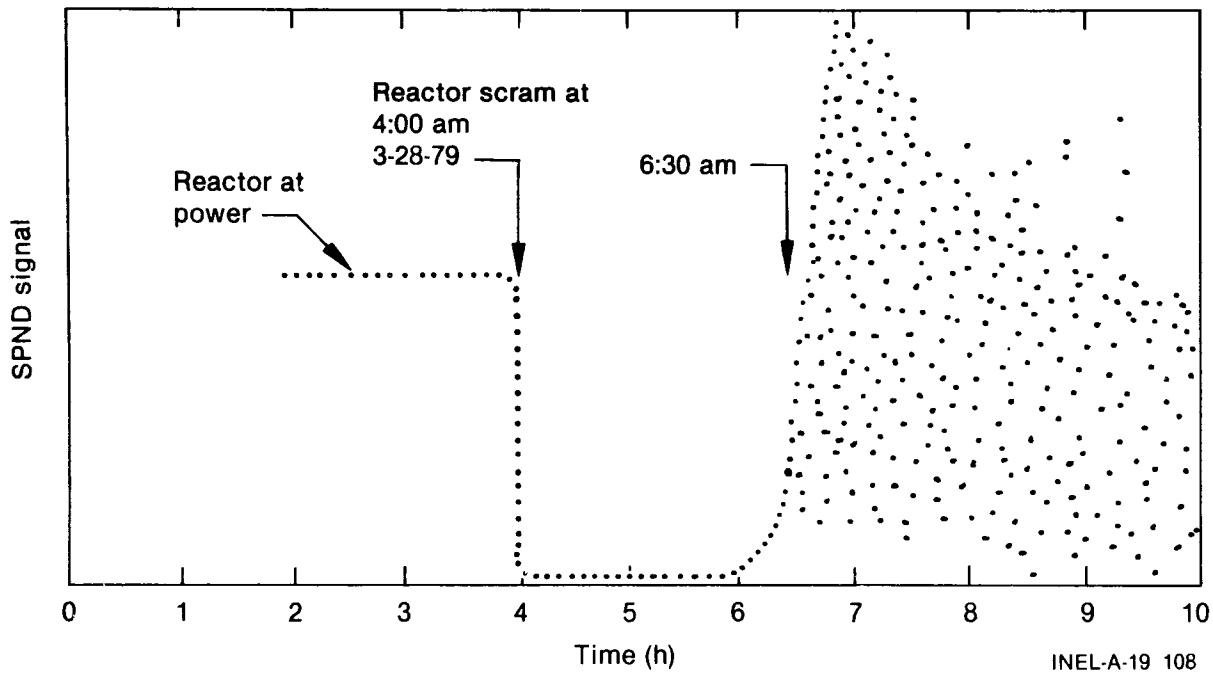

Figure 8. Backup recorder's tracing of in-core detector signals.

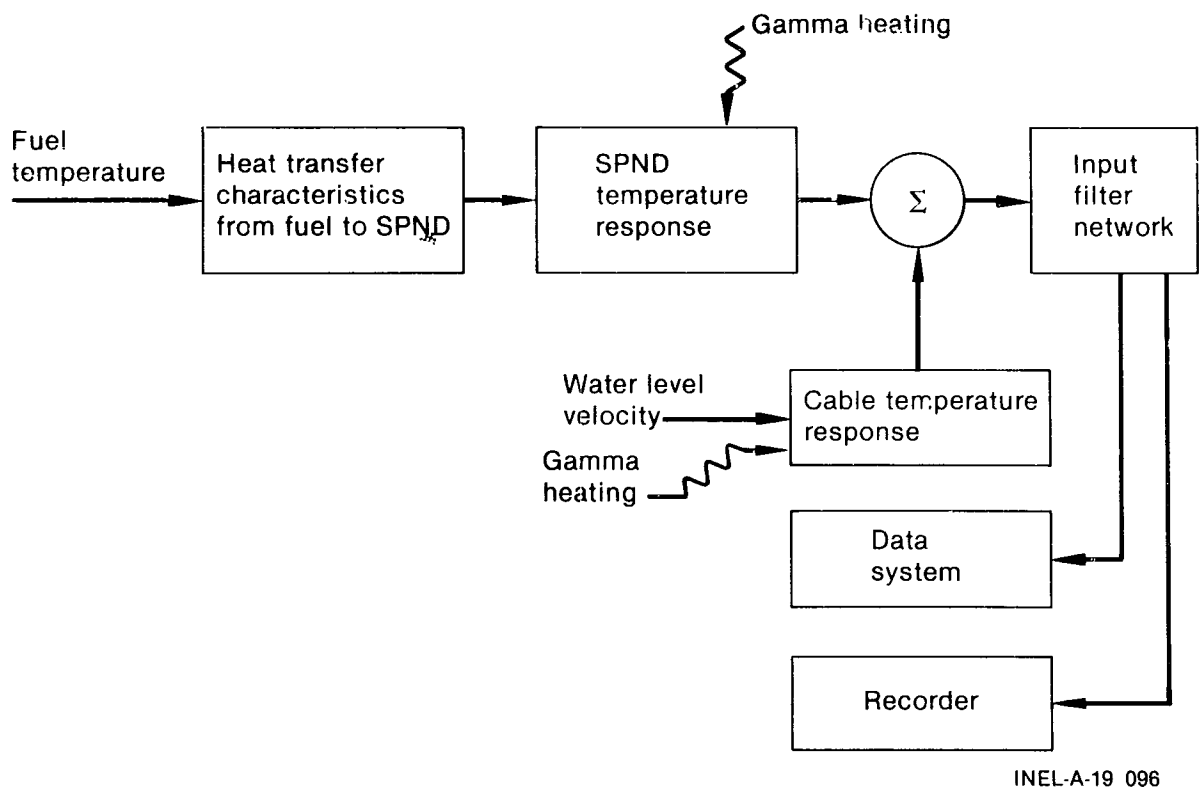

Figure 9. SPND measurement system block diagram.

The functions represented by each block were theoretically analyzed and the transfer characteristics were defined.

The results of this in-depth evaluation of the SPND measurement system concluded that the system cannot be used to quantitatively reconstruct in-core temperature-versus-time profiles during the accident. Even if the SPND were an ideal temperature sensor and the temperature history at the detector were completely known, the fuel temperature history would be lost, because the region of interest is where the radiation heat transfer dominates (temperature range of 1200 to 1800°F). Since this heat transfer mechanism has the greatest number of uncertainties, the fuel temperature history is completely masked. The SPND evaluation study demonstrated the necessity for a total system, end-to-end technical evaluation to establish measurement quality of instruments used to derive conclusions on the course of the TMI-2 accident.

In Situ Testing. The In Situ Test Program began in 1980 by conducting tests on the 12 instruments and components shown in Table 1 to obtain operational information prior to removal of selected items. The removal priorities were established in conjunction with the Instrumentation and Electrical Equipment Survivability Planning Group. Because early reactor building entries were costly and resulted in considerable personnel exposure, they were limited to one entry per month. The 12 instruments and components represented a broad cross section of instruments which provided sufficient material for study and were easily accessible for removal. Further in situ testing was deferred until removals and subsequent examinations verified the value of in situ testing. The results of early in situ tests, removals, and examinations, summarized in Table 1, proved the value of in situ examinations.

In October, the I&E Program began a systematic effort to perform in situ testing on a large number of instruments and components, and to use the results of these tests as a decision basis for further removal and examinations. Figure 10 shows an engineer performing an instrumentation in situ test.

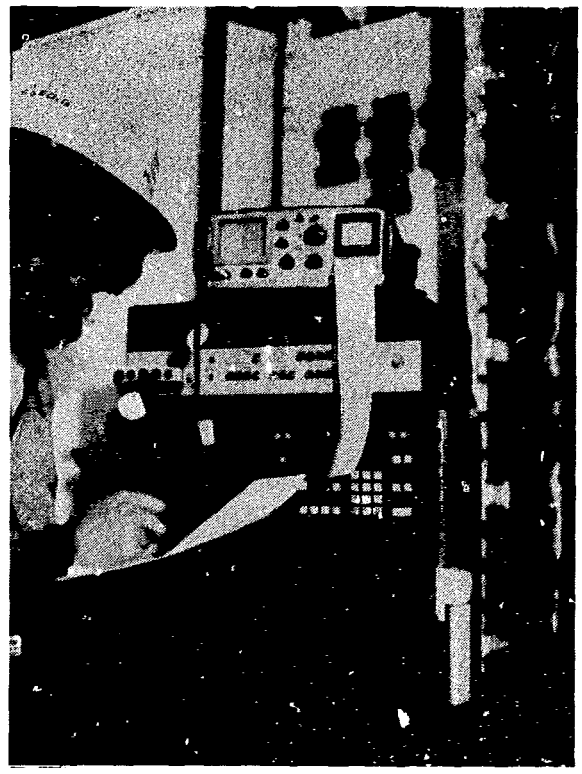

Figure 10. Engineer performs an instrumentation in situ test.

The Electrical Components and Discrete Device task selected reactor building components identified by GEND 001, *GEND Planning Report*, with concentration focused on those components that might be affected by the decontamination test activities scheduled for February 1982. The in situ test procedures that were originally outlined in 1980 were modified to ensure consistency of data among components.

Twenty-two electrical components and discrete devices underwent in situ testing in 1981. Table 2 lists preliminary test results. During the 22 tests, five components showed some anomolies and will be removed for further examinations. Two others, AH-V74 and NM-PS-1454, have already been removed, and will be examined in 1982.

In addition, in situ tests were performed on area radiation monitors HP-R-212 and HP-R-213, flow transmitter MU-10-FT1, pressure transmitters CF1-PT3, and level transmitter CF2-LT3 immediately prior to their removal.

Table 1. 1980 in situ test results and current removal status

Instrument Tag Number	Instrument Pretest Operating Status	Results of In Situ Tests	Current Status
HP-R-211	Out of service	Inoperative due to transistor failure	Removed—not replaced
HP-R-212	Operational	Indication of failure of output driver transistor	Removed and replaced
HP-R-213	Operational	Indication of failure—GM tube failed open	Removed and replaced
HP-R-214	Out of service	Indication of failure in detector circuitry	Power/signal cable removed
YM-AMP-7023	Operational	Not functioning properly—improper supply current	Removed
YM-AMP-7025	Operational	Not functioning properly—improper supply current	Removed
NI-AMP-2	Out of service	Not operating	Removed and replaced unit check operational
IC-10-JPT	Operational	Operational	Not scheduled for removal
CF1-PT3	Operational	Operational	Removed
CF2-LT4	Operational	Operational	Scheduled for removal and replacement
CF1-PT4	Operational	Operational	Not scheduled for removal
CF2-LT2	Operational	Not operating properly	Slated for removal and replacement

Table 2. Electrical component and discrete device in situ testing

Instrument Tag Number	Date of Test	Preliminary Test Results	Action
AH-V74	10/22/81	Operational	Removed 11/13/81[a]
AH-V6	11/22/81	Limit switch indicated short	To be removed and examined
AH-LS-5007	11/13/81	Operational	—[b]
AH-LS-5008	11/13/81	Operational	—[b]
RC60-LS1	12/03/81	Operational	—[b]
RC60-LS2	12/03/81	Operational	—[b]
NM-PS-4174	11/04/81	Normally open contact indicates short	To be removed and examined
AH-EP-5037	11/22/81	Operational	—[b]
AH-EP-5040	11/22/81	Operational	—[b]
AH-KS-5037	11/22/81	Operational	—[b]
AH-KS-5040	11/22/81	Operational	—[b]
AH-LS-5006	11/13/81	High contact resistance	To be removed and examined
NM-PS-4175	11/04/81	Operational	—[b]
RC56-PS1	12/03/81	Operational	—[b]
CF-V1A	12/08/81	Operational	—[b]
RC58-FS1	12/03/81	Failed	To be removed and examined
NS-V100	12/16/81	Operational	—[b]
RC67-VS1	12/28/81	D.C. reset coil open	To be removed and examined
RC67-VS3	12/28/81	Operational	—[b]
RCP-2-1A-1	12/31/81	Operational	—[b]
RCP-2-1B-1	12/31/81	Operational	—[b]
NM-PS-1454	08/21/81	Operational	Removed 08/27/81[a]

a. Selected for removal prior to in situ testing.

b. No further testing planned.

RADIATION AND ENVIRONMENT

The Radiation and Environment Program activities are associated with three major areas of interest:

- Fission product transport and deposition
- Decontamination and personnel dose reduction
- Accident evaluation.

Due to the complex interrelationships among Radiation and Environment Program activities, this section does not segregate the program subtasks according to major interest areas.

Scope

The objective of the Radiation and Environment Program in the fission product transport and deposition area is to acquire data that could significantly improve current understanding of nuclear power plant accident environments and the phenomena that contribute to those environments. These data will improve current understanding of fission product dispersal mechanisms, aid in the planning for dose reduction during decontamination operations, and provide environmental history data necessary to support equipment examination.

Work is being conducted to calculate a radionuclide mass balance and identify source terms (balances of the quantities of radionuclides released to the systems from the core) and flow paths at TMI-2. This work will use existing information and measurements from systems throughout the TMI-2 plant. This information, principally source term data, will be evaluated in terms of plant operating conditions, and corrected to the time of the accident. This work will identify systems source terms, generate a preliminary mass balance, present mass balance computations, and identify the information required from future work to complete the overall mass balance. These tasks are designed to provide a source manual that will include existing data and incorporate new data as they become available. This radionuclide mass balance document will include a complete mass balance, a systems mass balance, and source terms. The complete mass balance will identify the total fuel and fission products. The systems mass balance will identify the systems containing radionuclides, and provide the fractions of the total radionuclide and fuel inventory contained in each system. The source terms will indicate the quantities of radionuclides contained in systems components and the releasable fractions of these radionuclides.

The objective of the Radiation and Environment Program in the decontamination and personnel dose reduction area is to develop the necessary data to evaluate the cost and exposure per unit of work in contaminated areas within the reactor building and to evaluate the effectiveness of various decontamination techniques. These data are essential for choosing generic decontamination methods and controlling personnel exposures during future cleanup operations.

The objective of the Radiation and Environment Program in the accident evaluation area is to acquire and analyze data to provide an understanding of the hydrogen burn that occurred during the accident. Results of these analyses will improve understanding of hydrogen generation, transport, and combustion during a light-water-reactor accident. Tasks being conducted to support this work include data acquisition and qualification, data analysis, study of the effects of burn damage on electrical insulating material, visual damage assessments, and damage mapping. The visual damage assessment is based primarily on personnel observations and photographic surveys obtained during reactor building entries.

Accomplishments

The significant accomplishments of the Radiation and Environment Program during the reporting period are discussed in this section.

Primary Systems. A task was initiated to acquire information about the identity and concentration of fuel rod rupture debris, fission products, and activated corrosion products in the primary coolant system and its auxiliary components. Fission product identification and concentrations are particularly important for completing a radionuclide mass balance. In order to acquire the necessary information, samples from the following are required:

- Filters and filter debris from the makeup and purification (letdown cleanup) system
- Reactor coolant system (RCS) liquid
- Reactor coolant system sludge
- Liquid from the reactor coolant bleed tanks (RCBT).

This information will also be used to specify decontamination methods. The specific activities involved in taking these samples are described in the following sections. Figure 11 shows the reactor and auxiliary building sample locations.

Purification System Samples—Work procedures for the removal of makeup and purification system filters 5B, 2A, 2B, 3A, 4A, and 4B were developed early in 1981. The initial attempt to remove filter MU-F-5B was unsuccessful due to filter swelling; alternative removal techniques are being developed. During the attempted removal of MU-F-5B, approximately 3 g of brown/black granular debris were collected by GPU and shipped to Babcock & Wilcox (B&W) in Lynchburg, Virginia for analysis. The sample was divided by B&W, and 2 g of the debris shipped to EG&G Idaho for analysis at the INEL.

Results of the preliminary gamma analyses performed by B&W are presented in Table 3. These data indicate that the debris contains quantities of both soluble and insoluble mixed fission products. In addition, particle size analysis shows a size range of less than 1 to 5 μm. Some areas with particle sizes of 25 to 50 μm were observed in the sample but were thought to be agglomerations. Gross alpha and beta activities were 470 μCi/g and 2.3E + 4 μCi/g, respectively. The radiostrontium

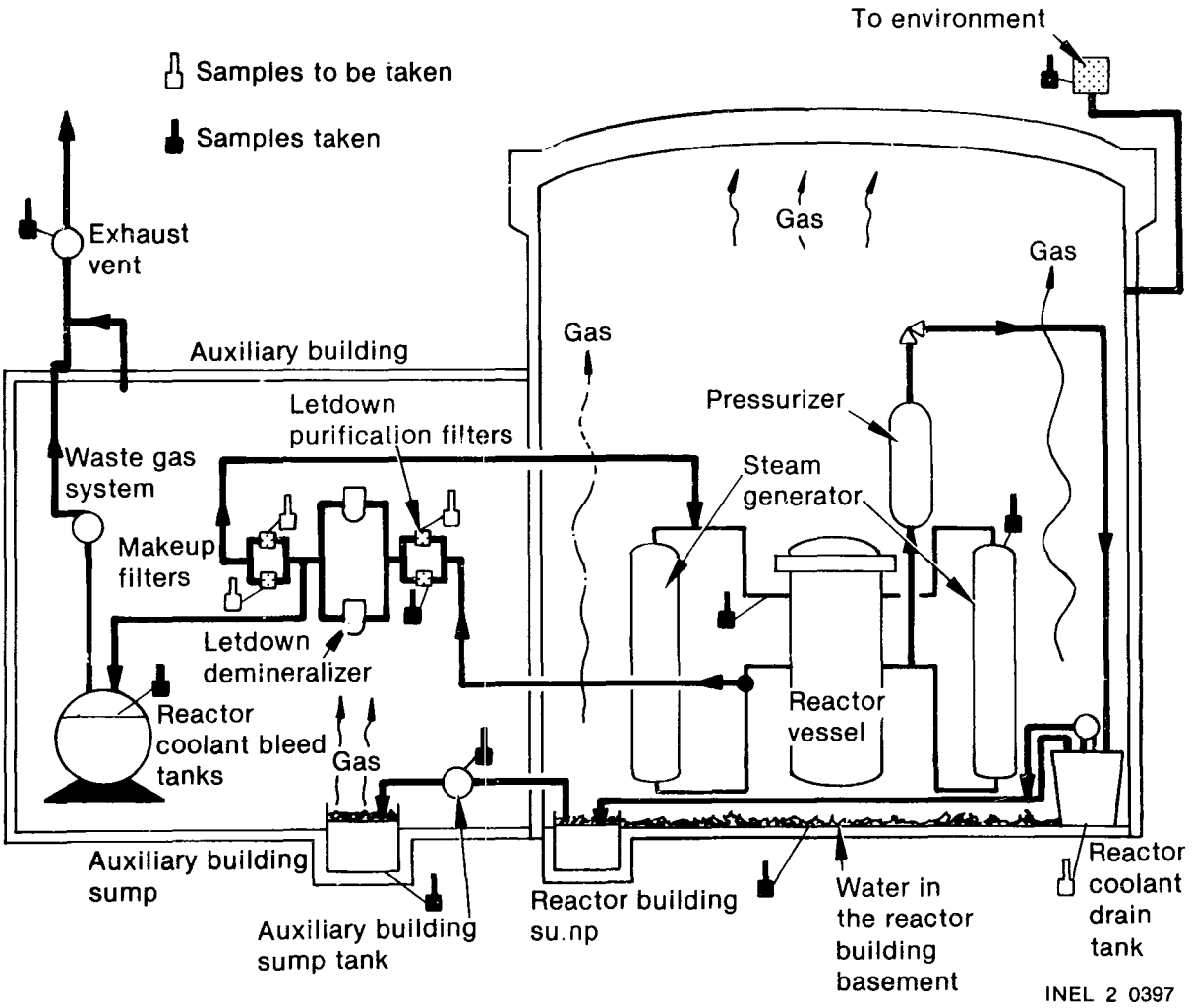

Figure 11. Reactor and auxiliary building sample points.

Table 3. TMI-2 MU-F-5B filter debris sample gamma analysis (preliminary results activities in μCi/g)

Isotope	As Received[a]	Homogenized and Dissolved	Cs Removed
^{54}Mn	16.2	22.75	24.46
^{60}Co	174.6	246.6	248.6
^{106}Ru	409.3	656.4	650.4
^{134}Cs	300.1	401.2	<2.63
^{137}Cs	2744	3684	<2.07
^{144}Ce	800.2	1204	1188
^{125}Sb	1691	2719	1891
^{110m}Ag	<7.7	51.4	15.6
^{51}Cr	<27.4	409	396
^{95}Zr	<4.9	3.4	<7.8

a. Grab sample of 475 mg.

(^{90}Sr) activity was 4.96E + 3 μCi/g. The debris sample was further analyzed by emission spectroscopy for major and minor trace elements. The results of this analysis are shown in Table 4.

The high fractions of carbon, silver, and cadmium indicate that some control rod materials are contained in the debris from the makeup system. The fractions of zirconium and uranium indicate that there are also quantities of fuel rod material mixed with the debris.

Reactor Coolant System Liquid Samples—Reactor coolant system samples are taken on a weekly basis and subjected to chemical and radiochemical analyses. The results from representative samples taken at the beginning and end of fiscal-year 1981 are shown in Table 5.

Two additional 150-ml reactor coolant liquid samples were taken and analyzed for radionuclide concentrations by two independent laboratories; Exxon Nuclear Idaho Co., Inc. (ENICO), and EG&G Idaho, Inc., INEL. Upon receipt, a visual description of the samples was made and photographs taken. Measurements and analyses performed on the liquid sample included gamma-ray spectrometry, alpha and beta isotopic, ^{129}I, ^{3}H, ^{14}C, ^{144}Ce, elemental, pH, conductivity, and density. To determine the quantities of solids and to obtain a measure of the particle size distributions of the solids in the sample, each of the samples was filtered through a series of three preweighted filters. The total quantities of solid on each filter were calculated and the volumes of the filtrates were measured. After the samples were filtered and weighed, they were analyzed using x-ray diffraction (XRD), direct current emission spectrometry (DCES), and gamma-ray spectrometry. The results of the analyses will be documented and published as GEND 015, *Reactor Coolant System and Reactor Coolant Bleed Tank Sample Analysis.*

These analyses will yield information important for mass balance considerations and will contribute to estimations of core damage based on the concentrations and types of radionuclides present in the RCB tanks and the reactor coolant system. In addition, this information will help identify the type of actions required to minimize personnel exposures resulting from dissolved and suspended radionuclide particulates in the refueling canal.

Reactor Coolant System Sludge—An engineering study conducted during the year determined the feasibility of and methods for obtaining early RCS sludge samples from the reactor vessel, pressurizer, upper and lower steam generator tube sheets, the RCS piping low points leading to the steam generators, and the reactor vessel. The scrape sample was determined to be the most desirable type because the material collected using this technique is truly representative of the

Table 4. MU-F-5B filter debris sample emission spectroscopy analysis results

Compound[a]	Relative Weight (%)[b]	Compound	Relative Weight (%)
Fe_2O_3	7	MnO_2	0.1
Al_2O_3	0.8	NiO	6
ZnO	<0.2	MgO	<0.05
PbO	<0.03	TiO_2	0.1
SiO_2	1.8	V_2O_5	<0.05
Na_2O	0.6	CaO	0.2
CuO	0.5	B_2O_3	2
MoO_3	0.8	Gd_2O_3	<0.1
ZrO_2	>25	UO_2	6
SnO_2	3	CdO	11
Cr_2O_3	0.4	Ag_2O	6-12 est.
CoO	0.08	C	17.6

a. Compounds listed are the ones used in the analysis control standards. Elements in the sample are not necessarily present in this form.

b. Error in the relative weight % is ±25.

Table 5. Results of typical reactor coolant system liquid samples

Sample	Unit	11/17/80	08/31/81
pH		7.6	7.6
Boron	ppm	3770	3720
Sodium	ppm	910	917
Chloride	ppm	0.8	1.3
Tritium	μCi/g	0.08	0.05
^{134}Cs	μCi/g	3.8	1.5
^{137}Cs	μCi/g	26	15
Gross beta	μCi/g	70	48
Hydrogen	cc/kg	5	10
Nitrogen	cc/kg	3	9
^{85}Kr	μCi/g	0.035	Not detected
Total Gas	cc/kg	8	19

deposits on RCS surfaces. However, due to the constraints associated with scrape sampling, the steam generator upper tube sheet was the only location considered feasible to employ this sampling technique. The sampling technique considered to be most feasible was the collection of water samples and any entrained sludge from the system low points. In addition to the feasibility study, further nondestructive techniques were evaluated for assessing fuel debris and sludge in the RCS, and are described in the section, "Fuel Deposition Determination."

Reactor Coolant Bleed Tank Samples—Samples from the reactor coolant bleed tanks A, B, and C were obtained early in 1981. These samples were analyzed at the INEL; results indicate that there are both soluble and insoluble fission products in the tanks. The results also show minor quantities of fuel intermixed with the fission products.

A portable spectrometer system collected gamma spectrometer measurements of the gamma rays emitted from reactor coolant bleed tanks A and C. The spectra showed the presence of nuclides ^{60}Co, ^{134}Cs, ^{137}Cs, and $^{144}Ce/Pr$. Total activity measurement results for the insolubles detected are shown in Table 6.

Table 6. Estimated total activity of ^{60}Co and ^{144}Ce isolubles in RCB tanks A and C

Tank	^{60}Co	^{144}Ce
A	0.19 Ci	4.1 Ci
C	0.57 Ci	20 Ci

Fuel Deposition Determination—Based on observations of material in the makeup and purification system, fuel debris probably is dispersed throughout the primary loops and connecting piping. Most of this material is expected to have accumulated primarily at low points and low velocity areas. However, because direct access to many of these locations will be difficult, nondestructive techniques will be needed to locate, identify, and assay fuel debris. Such techniques will not only enable the accumulation of data on postaccident conditions, but will also allow monitoring of the effectiveness of debris removal and dissolution techniques.

During 1981, an engineering evaluation was completed that assessed nondestructive techniques for locating and characterizing fuel debris within the TMI-2 primary system. Techniques assessed include gamma spectral scanning, neutron counting, and infrared examinations. This engineering evaluation was published in November 1981 as GEND-018, *Nondestructive Techniques for Assaying Fuel Debris in Piping at Three Mile Island Unit 2*. In addition, this information was communicated to EPRI, who will characterize debris within the primary system as a part of their primary coolant system decontamination program. EPRI sample analyses will be integrated with other activities in the Mass Balance Program.

Preliminary testing of a portable gamma spectrometer system was performed in the Gas Analyzer Room on the 305-ft elevation of the auxiliary building. The spectrometer was positioned directly in front of the makeup and purification demineralizer 1-A cubicle door. Two spectra, each having a count-line time of 400 s, were collected using the horizontal collimator. The nuclides detected were ^{60}Co, ^{134}Cs, ^{137}Cs, and $^{144}Ce/Pr$. Since $^{144}Ce/Pr$ are insoluble fission products with nearly identical chemical properties to Pu and U, they may be used as fuel trackers. Preliminary review of the gamma-spectral scanning results may prove this technique to be most suitable for determining fuel deposition within the primary system at TMI-2.

Reactor Building and Support Systems. The objective of this task is to obtain information on fission products transport, deposition, and plate-out in the environment of the reactor building and support systems, including fission product history since the accident. The task will involve documentation, sampling, and data acquisition, all of which directly support decontamination experiment efforts. Figures 12 through 17 show reactor building general beta and gamma radiation levels and surface deposition. The information collected under this task will be used for mass balance reactor building modeling and accident analysis. The data obtained from sampling will be used to make detailed contamination radiation maps of the beta, gamma, and alpha fields in the reactor building.

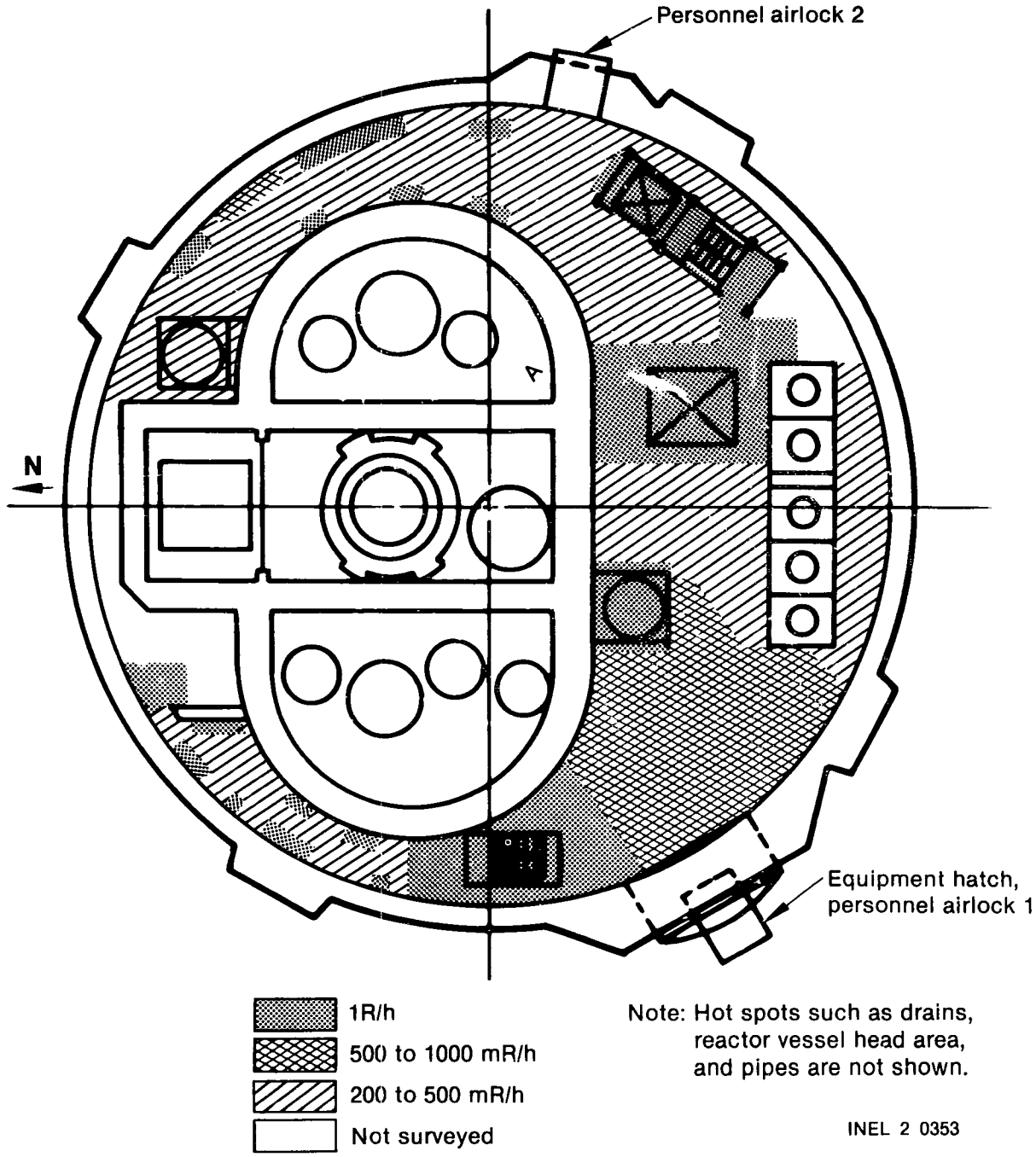

Figure 12. General radiation levels on 305-ft elevation.

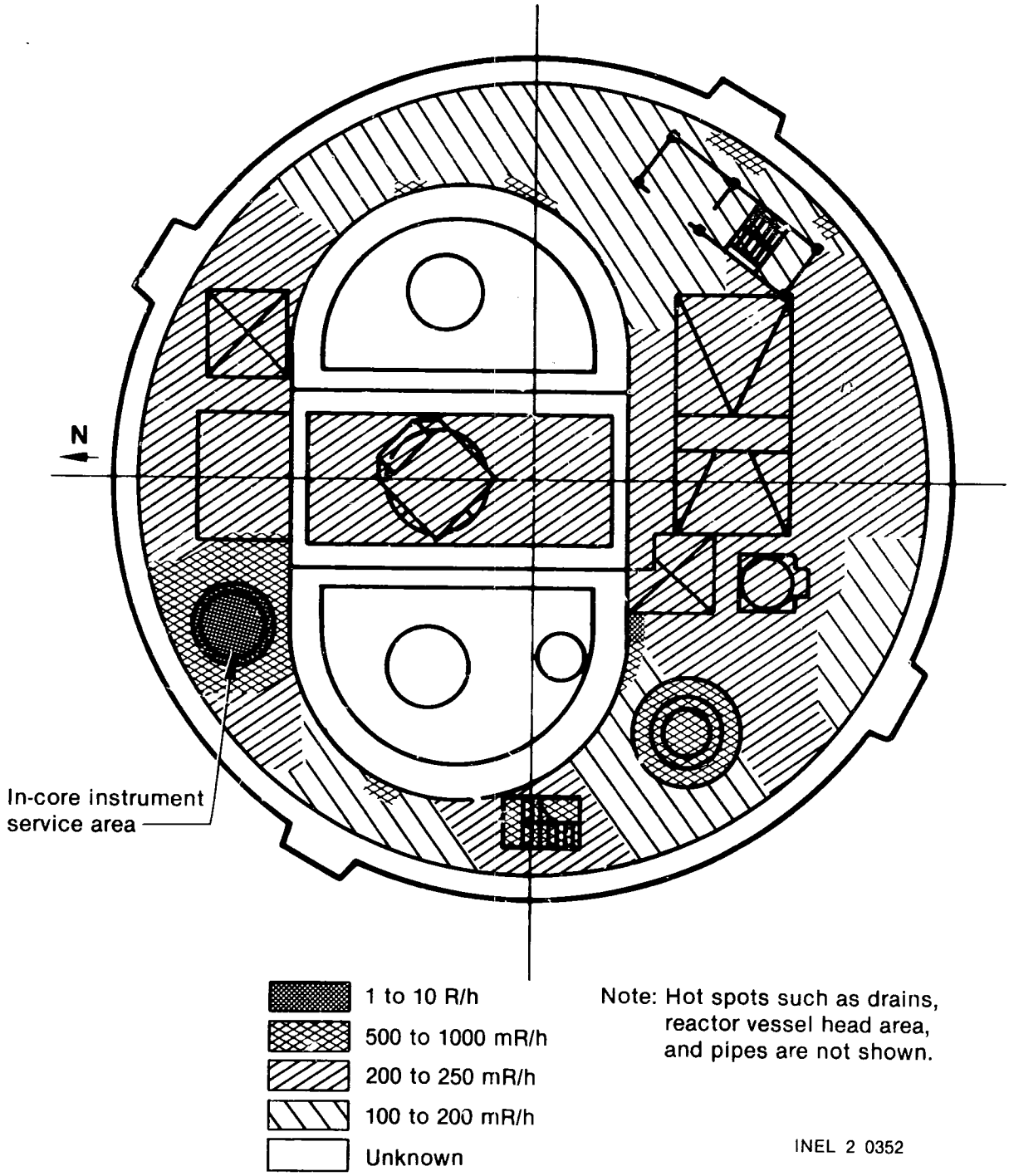

Figure 13. General radiation levels on 347-ft elevation.

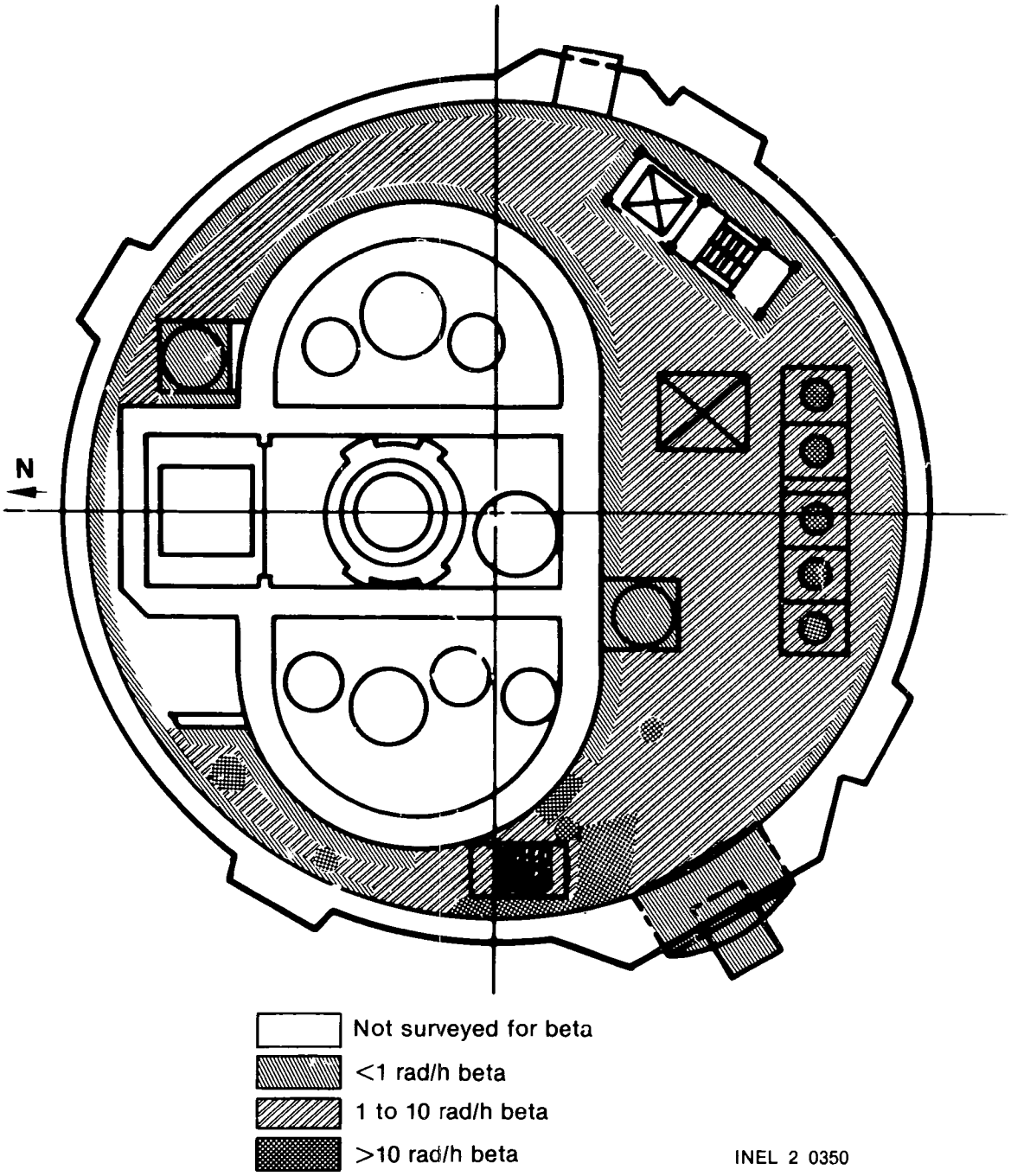

Figure 14. Beta radiation levels on 305-ft elevation.

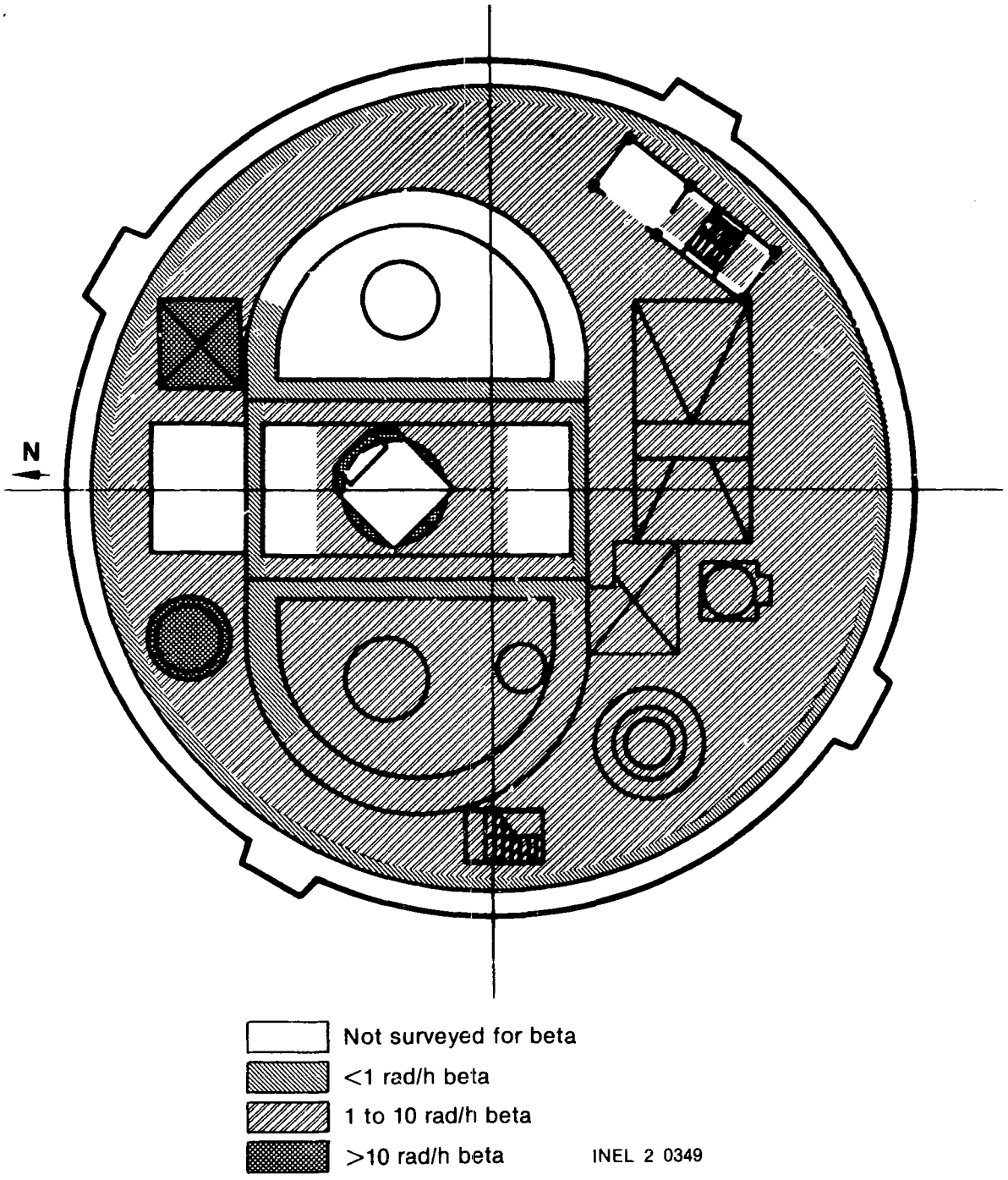

Figure 15. Beta radiation levels on 347-ft elevation.

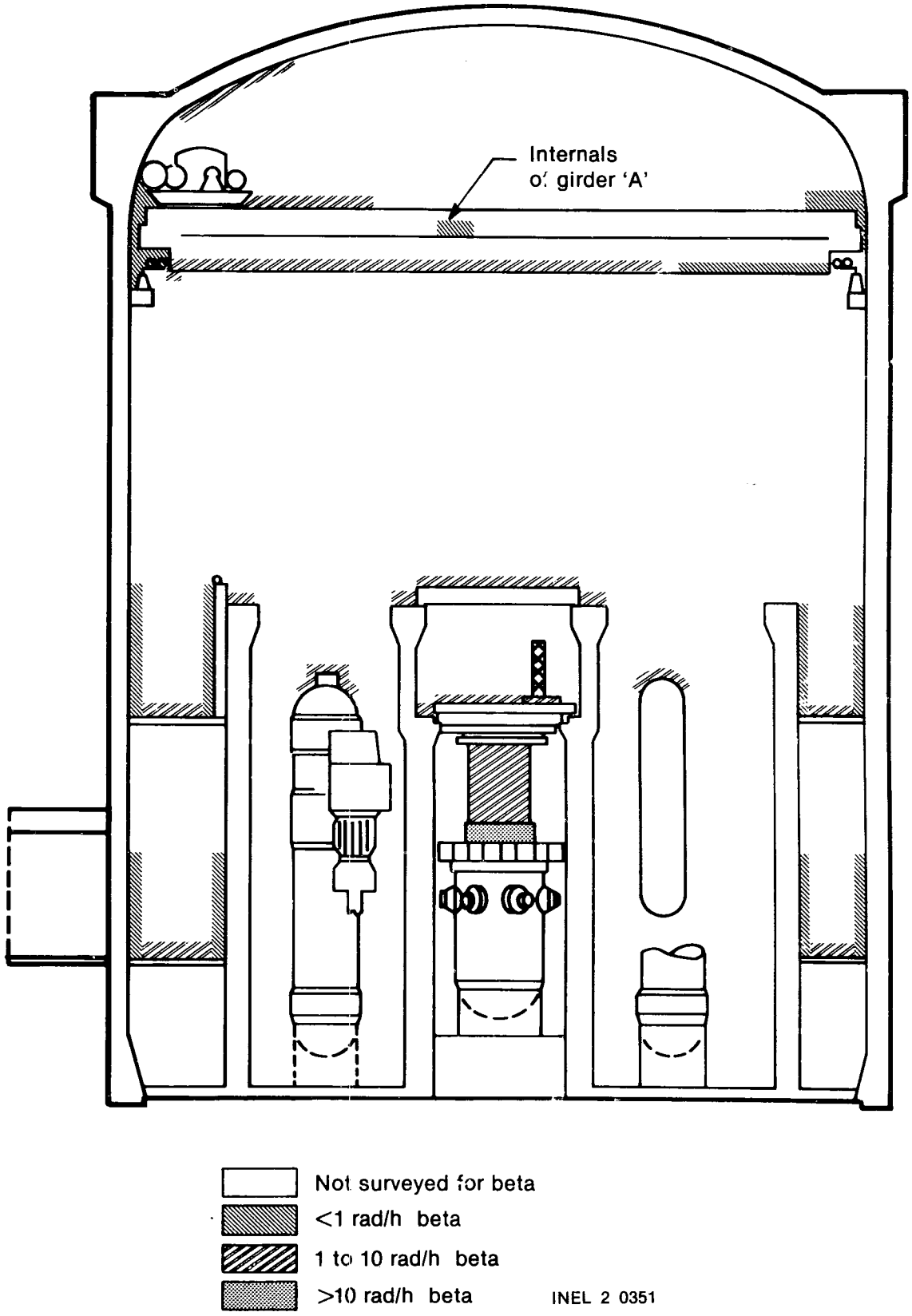

Figure 16. Surface contamination beta radiation levels.

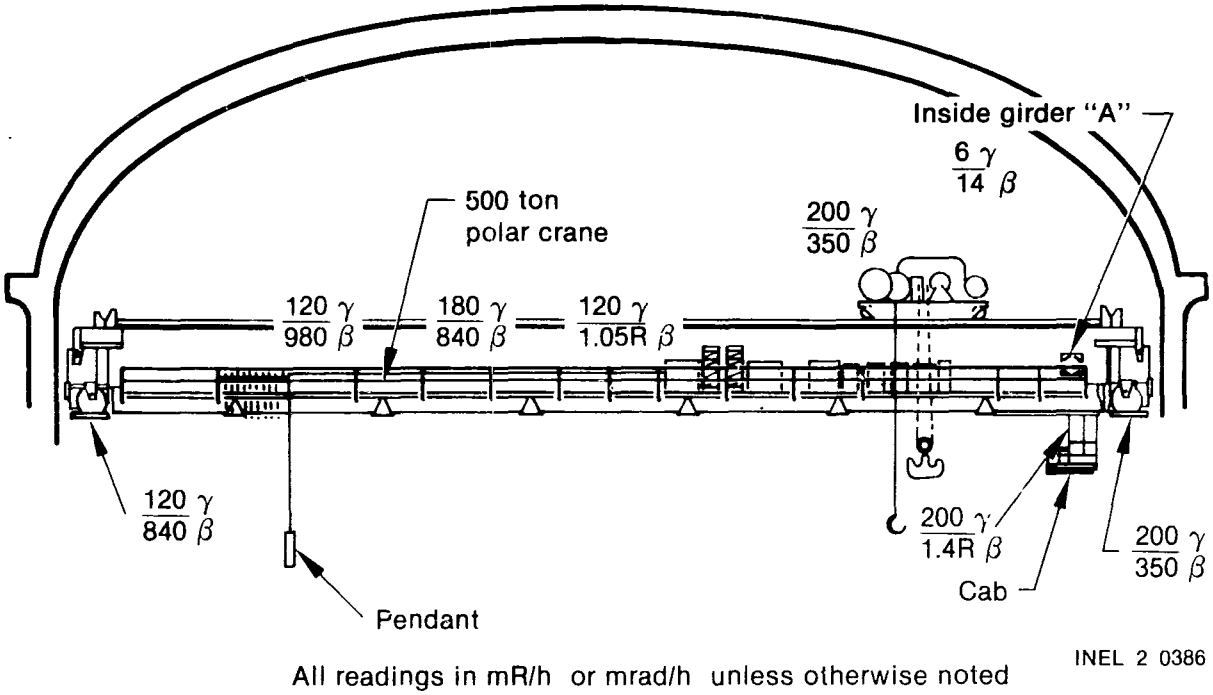

Figure 17. Polar crane radiation map of surface deposition.

Air Cooler Samples—Total dose and isotopic measurements of plateout on air coolers will assist in the fission product mass balance and accident diagnosis by locating and identifying suspended nuclides.

During Entry 15, general area and contact beta/gamma radiation surveys were conducted on the upper sections of the air cooling units. General area radiation readings on top of the units ranged from 2 to 5 rd/h.

A portable gamma spectrometer was taken into the reactor building during Entry 18, and eight spectra of the air coolers were obtained. Total activity measurement results from those spectra are shown in Table 7.

These data reflect the operational histories of the cooling units since the accident: Cooler C, in operation before the accident and still running, represents an accumulation of activity in a forced-air stream during the accident and postaccident sequence to date; Cooler D, running at the inception of the accident but tripping shortly thereafter and not restarted, represents immediate postaccident radionuclide accumulation in a forced-air stream; Cooler E, out of service at the inception of the accident, represents preaccident levels. Samples from the coils of these air coolers will be obtained when the coolers are shut down in 1982. The samples should help clarify the extent and rate of deposition for radionuclides during the accident.

Table 7. Radionuclide activities found on the reactor building air coolers

Air Cooler	^{134}Cs (Ci)	^{137}Cs (Ci)
AH-E-11C		
Coils	0.5 ± 0.3	5.9 ± 1.0
Drip pan	0.012 ± 0.006	0.07 ± 0.03
AH-E-11D		
Coils	0.2 ± 0.1	1.6 ± 0.4
Drip pan	a	0.02 ± 0.1
AH-E-llE		
Coils	a	0.8 ± 0.4
Drip pan	a	0.03 ± 0.03

a. Statistically indeterminate.

Reactor Building Sump Samples—Sampling and analysis of the reactor building sump will determine the quantity and nature of radioactive material in the sump, the height and density of flocculent material in the sump, and the size and type of solid debris present. This information will be used for mass balance determinations, evaluation of decontamination techniques, and accident diagnosis.

During 1981, EG&G Idaho designed and fabricated a sump water and sludge sampling device (WSSD) to safely and efficiently obtain eight simultaneous samples from the reactor building sump. The sump sampler is a pole-operated device designed to acquire samples of sump sludge and liquids from three different levels in the sump water. The sampler was designed to take two liquid samples near the surface, two liquid samples at midpoint, and two liquid samples and two sludge samples near the bottom of the basement water. The bottom portion of the WSSD is shown in Figure 18.

During Entry 10 on May 14, 1981, the entry team obtained eight sump water samples with the sump water sampling apparatus. All eight samples were obtained simultaneously with the WSSD from the basement water below the covered hatch in the southeast quadrant of the 305-ft elevation in the reactor building. The samples were obtained prior to the large-scale decontamination effort that occurred on the same date. These samples were individually packaged and shipped to EG&G Idaho for analysis.

Samples 1, 3, 6, and 8 were analyzed. Samples 2, 4, 5, and 7 were archived for future reference. Samples 7 and 8 contained bottom sludge as well as liquid; the others contained no observable insolubles. Both liquid and sludge were analyzed from Sample 8. Nuclide analyses were done for the gamma emitters, ^{137}Cs and ^{134}Cs; the beta emitter, ^{90}Sr; the x-ray emitter, ^{129}I; and for fissile material. The presence of ^{144}Ce, ^{125}Sb, and ^{60}Co was also observed and quantitatively measured where possible. The results of the analysis of the sump samples were documented and published as GEND-INF-011, *First Results of TMI-2 Sump Samples Analysis—Entry 10.* Table 8 shows these preliminary analysis results.

TMI-2 reactor building sump samples were analyzed both for radioactive isotopes and stable elements. The predominant activities in the samples were ^{134}Cs, ^{137}Cs, and $^{90}Sr/Y$. The cesium was determined by gamma spectrometry as a point source and the strontium was separated from all other activity and counted under gas-flow end window proportional counter. The results are shown in Table 9.

In addition, other nuclides were also detected by gamma spectrometry. Thirty nanocuries of ^{125}Sb and 60 pCi of ^{60}Co were found in Samples 1, 3, and 6. Eight nanocuries of ^{144}Cs, 50 nCi of ^{125}Sb, 0.4 nCi of ^{106}Ru, 0.2 nCi of ^{54}Mn, and 0.8 nCi of ^{60}Co were found in Sample 8.

The insoluble material was filtered from Sample 8, washed and dried, and analyzed as a separate sample. The radioactive elements found in the insolubles are listed in Table 10.

Three milliliters of each sample were irradiated for fissile material measurement by delayed neutron counting. Sample 8 was shaken to suspend the precipitate so a representative sample could be taken. No detectable fissile material was found in Samples 1, 3, or 6. However, Sample 8 contained 0.24 ± 0.02 μg of fissile material equivalent to ^{235}U and the insolubles contained 104 ± 4 μg of fissile material equivalent to ^{235}U per gram of dry material.

The insolubles of Sample 8 were irradiated in the Coupled Fast Reactivity Measurement Facility (CFRMF) and in the Advanced Test Reactor 2 (ATR) at the INEL where the short and long half-life isotopes were produced by neutron activation. A known sample of ^{129}I and a sample of pitchblende ore of known uranium content were included in the ATR irradiation for verification of the ^{129}I and ^{238}U content. The results are shown in Table 11. Of particular significance is the fact that the percentage of fissile material is greater than 3.5% as compared to ^{238}U. Since the average enrichment of the TMI-2 fuel is approximately 2.4% and only the outer regions of the core have a fuel enrichment of approximately 3.5%, these test results indicate that damage may extend to the outer core regions.

Iodine was chemically separated from 1 ml of each of the samples, absorbed on an ion-exchange resin, and irradiated in the Advanced Test Reactor for the determination of ^{129}I. The results are shown in Table 12.

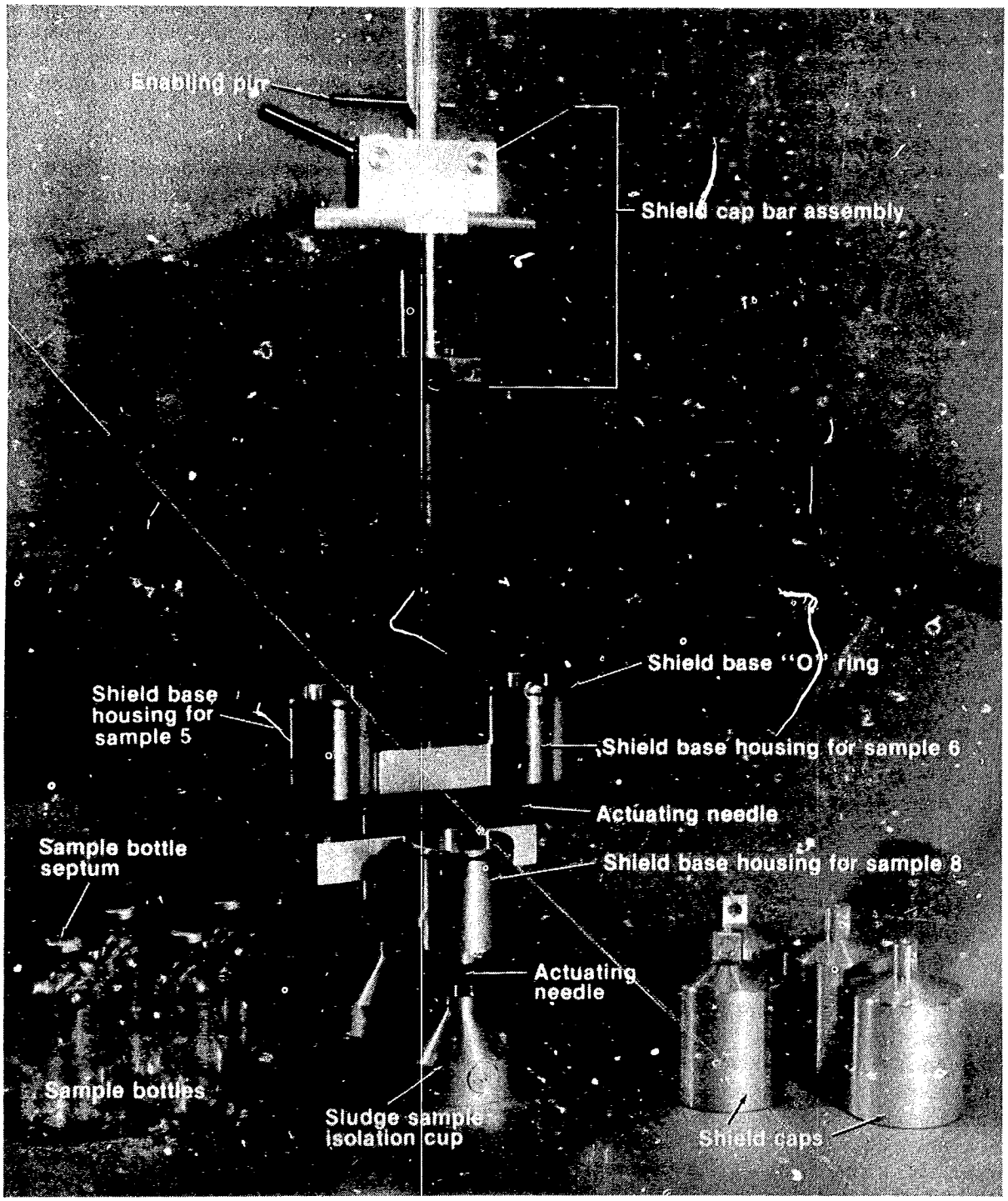

Figure 18. Bottom portion of water and sludge sampling device.

Table 8. Results of the TMI-2 reactor building basement water sample analysis[a]

	Sample					
	1	3	6	8		
Nuclide	(μCi/ml)	(μCi/ml)	(μCi/ml)	Slurry (μCi/ml)	Supernate (μCi/ml)	Particulate (μCi/g solids)
^{54}Mn	ND	ND	ND	>2E-04	NA	ND
^{60}Co	>6E-04	>3E-03	>2E-03	>8E-04	NA	1.7 ± 0.2E+01
^{90}Sr	5.0 ± 0.2E+00	5.4 ± 0.2E+00	5.2 ± 0.2E+00	NA	NA	8 ± 2E+02
^{90}Sr	5.4 ± 0.5E+00	5.2 ± 0.5E+00	5.1 ± 0.5E+00	NA	5.3 ± 0.5E+00	7.8 ± 0.8E+02
^{106}Ru	ND	ND	ND	>4E-04	NA	ND
^{125}Sb	>3E-02	>3E-02	>3E-02	>5E-02	NA	4.5 ± 0.2E+02
^{129}I	5.5 ± 0.7E-06	5.4 ± 0.7E-05	3.8 ± 0.5E-06	NA	2.5 ± 0.5E-06	NA
^{134}Cs	1.85 ± 0.01E+01	1.84 ± 0.01E+01	1.86 ± 0.01E+01	1.87 ± 0.01E+01	NA	1.79 ± 0.04E+02
^{137}Cs	1.43 ± 0.01E+02	1.42 ± 0.01E+02	1.43 ± 0.01E+02	1.44 ± 0.01E+02	NA	1.29 ± 0.01E+03
^{144}Ce	ND	ND	ND	>8E-03	NA	7.6 ± 0.6E+01
	(μg/ml)	(μg/ml)	(μg/ml)	(μg/ml)	(μg/ml)	(mg/g solids)
^{235}U& ^{239}Pu	<1E-02	<1E-02	1E-02	NA	NA	8.8 ± 0.9E-02
^{238}Pu	4 ± 1E-08	NA	NA	5 ± 1E-07	NA	5 ± 1E-07
^{239}Pu	2.2 ± 0.7E-04	NA	NA	2.6 ± 0.5E-03	NA	2.9 ± 0.6E-03

a. Concentrations as of 6-1-81. ND = not detected. NA = not analyzed

Table 9. TMI-2 sump liquid sample radionuclide activities

Sample	Volume Taken	^{134}Cs (μCi/ml)	^{137}Cs (μCi/ml)	^{90}Sr (μCi/ml)
1	0.100 ml	18.5 ± 0.1	143 ± 1	5.0 ± 0.5
3	0.100 ml	18.4 ± 0.1	142 ± 1	5.4 ± 0.5
6	0.100 ml	18.6 ± 0.1	143 ± 1	5.2 ± 0.5
8	0.100 ml	18.7 ± 0.1	144 ± 1	8.0 ± 0.5

Table 10. TMI-2 sump Sample 8 insoluble radioactive isotopes

Isotope	Activity (μCi/g)
^{54}Mn	1.7 ± 0.3
^{60}Co	11.4 ± 0.5
^{106}Ru	76 ± 5
^{110m}Ag	4.4 ± 0.5
^{113}Sn	2.6 ± 0.7
^{125}Sb	435 ± 8
^{144}Ce	4 ± 2

Table 11. Insoluble elements measured by neutron activation analysis in TMI-2 sump Sample 8[a]

Element	Percent by Weight[b]
Na	0.19 ± 0.02
Al	1.06 ± 0.11
K	0.17 ± 0.02
Ti	1.4 ± 0.5
Mn	0.24 ± 0.02
Fe	15 ± 6
Cu	10.4 ± 1.9
Zn	1.8 ± 0.2
Ag	1.6 ± 0.3
Cd	0.64 ± 0.10
^{129}I	0.065 ± 0.006
^{235}U	0.0104 ± 0.0004
^{238}U	0.39 ± 0.04

a. Fissile material, assumed to be ^{235}U.

b. Errors are quoted at the one-sigma level.

Table 12. ^{129}I found in TMI sump samples

Sample	^{129}I (μCi/ml)
1	5.5 ± 0.7 E-6
3	5.4 ± 0.7 E-6
6	3.8 ± 0.5 E-6
8	2.5 ± 0.5 E-6

The insolubles were analyzed by x-ray fluorescence. The major components detectable by x-ray are Ca, Ti, Cr, Mn, Fe, Ni, Cu, Zn, Pb, U, Zr, Mo, Cd, In, and Sn. At this time, x-ray fluorescence is being used for a qualitative analysis only.

During Entry 16 on September 24, 1981, the entry team obtained an additional 125-ml sample of liquid and sludge from the bottom of the sump at the open stairwell. The sample was shipped to EG&G Idaho for analysis; results are expected in the first quarter of 1982 and will be published as a GEND report. The sampler used in this work (see Figure 32)—a second sampler designed by EG&G Idaho for taking a sample at a different, less accessible location—will provide additional data to characterize surface deposition in the reactor building basement.

Surface Deposition and Environment. This activity of the Radiation and Environment Program determines and documents current conditions within the reactor building through sampling and data acquisition and will develop the environmental history of the building since the accident. The surface deposition task objective is to determine the isotopic, chemical, and physical characteristics of radionuclides deposited inside the reactor building on floors and walls. The task directly supports decontamination experiment efforts.

Sample and data acquisition tasks planned for the reactor building will provide the surface characterization needed to determine appropriate decontamination techniques. Decontamination tests were performed on two samples taken during Entry 2, a rusty funnel and a stainless steel housing. The results of the gamma ray analysis decontamination tests are shown in Table 13.

In conjunction with the surface deposition characterization, two portable gamma spectrometer systems were developed for use in the TMI-2 reactor building. These instruments identify gamma-emitting contaminants deposited on structural surfaces or held in the inventories of tanks, pipes, or demineralizers that are recalcitrant to direct sampling. These measurement data would complement other data used to determine fission product mass balances, reactor building source terms, and the effectiveness of decontamination techniques.

Table 13. Gamma ray analysis decontamination factors

Decontamination Factor	Decontamination Treatment[a] 1	2	3	4	5	6
Funnel						
First treatment	1.04	1.10	1.06	1.07	1.07	1.14
Second treatment	1.03	1.00	1.05	1.07	1.13	1.12
Stainless Steel Housing						
First Treatment	1.92	3.83	11.3	33	2.12	4.82
Second Treatment	1.42	1.36	14.2	4.91	1.20	1.22

a. Type of decontamination treatments:

1—Dry Swipe—Whatman 41
2—Water Swipe
3—Radiac Wash Swipe
4—Fantastic™ Swipe
5—Low Pressure Water—13°C
6—Low Pressure Water—48.9°C.

The portable gamma spectrometer system developed by EG&G Idaho is shown in Figure 19 and consists of the following commercially available major components:

- Princeton Gamma Tech., Inc. (PGT) intrinsic germanium detector with a 1.4-l liquid nitrogen dewar
- Davidson 4096—channel analyzer with an attached high-voltage power supply
- Digital cassette recorder
- Battery pack power supply and associated signal and power cables.

On December 15, 1981, an entry was made into the reactor building to obtain gamma spectra of surfaces on the 305-ft elevation. Five areas were selected for these measurements: two wall surfaces, two floor surfaces under the reactor core flood tanks, and one general-area floor surface. The relative locations and surface contamination levels for the gamma scans are shown in Figure 20. The results show general contamination levels of less than 1 $\mu Ci/cm^2$ for all of the surfaces, horizontal surfaces being higher than vertical surfaces. Two of the areas show no net detectable activity; minimum detectable limits are shown as less than 0.3 $\mu Ci/cm^2$.

The first opportunity for direct analysis of concrete and metal surface contamination levels inside the reactor building occurred during predecontamination activities conducted in late 1981. Several concrete and metal core samples were obtained prior to performing decontamination experiments. Surface and subsurface samples were collected with the surface deposition sampler shown in Figure 21. The surface sampler is a drill with an attached housing and vacuum unit. The core samples are obtained at various depths by controlling the five drill-depth adjustments on the unit.

The purpose of these samples is to obtain accurate measurement values for the radionuclide surface deposition on walls, floors, and equipment

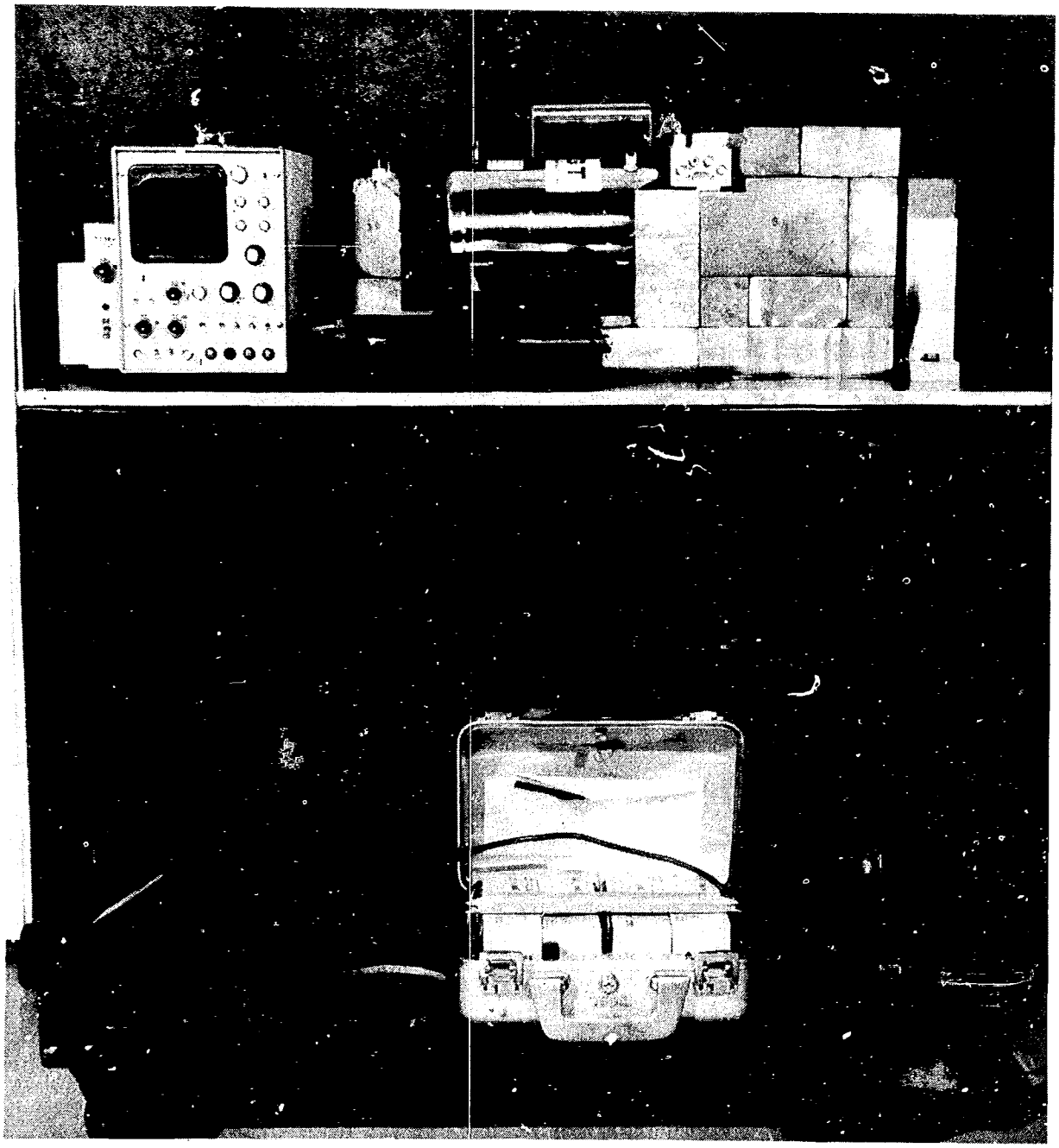

Figure 19. Portable gamma spectrometer.

Area designation	Net ^{137}Cs counting rate (c/s)	^{137}Cs surface contamination (μ Ci/cm^2)
13-wall	<0.6	<0.2
H7-floor under CF-T-1A	4.5 ± 0.5	0.96 ± 0.10
V9 - wall	1.7 ± 0.9	0.5 ± 0.3
34 - floor	4.1 ± 0.8	0.9 ± 0.2
H5- floor under CF-T-1B	<1.5	<0.3
*F - floor	136.6 ± 1.0	28 ± 2

* γ Scan obtained during entry #18

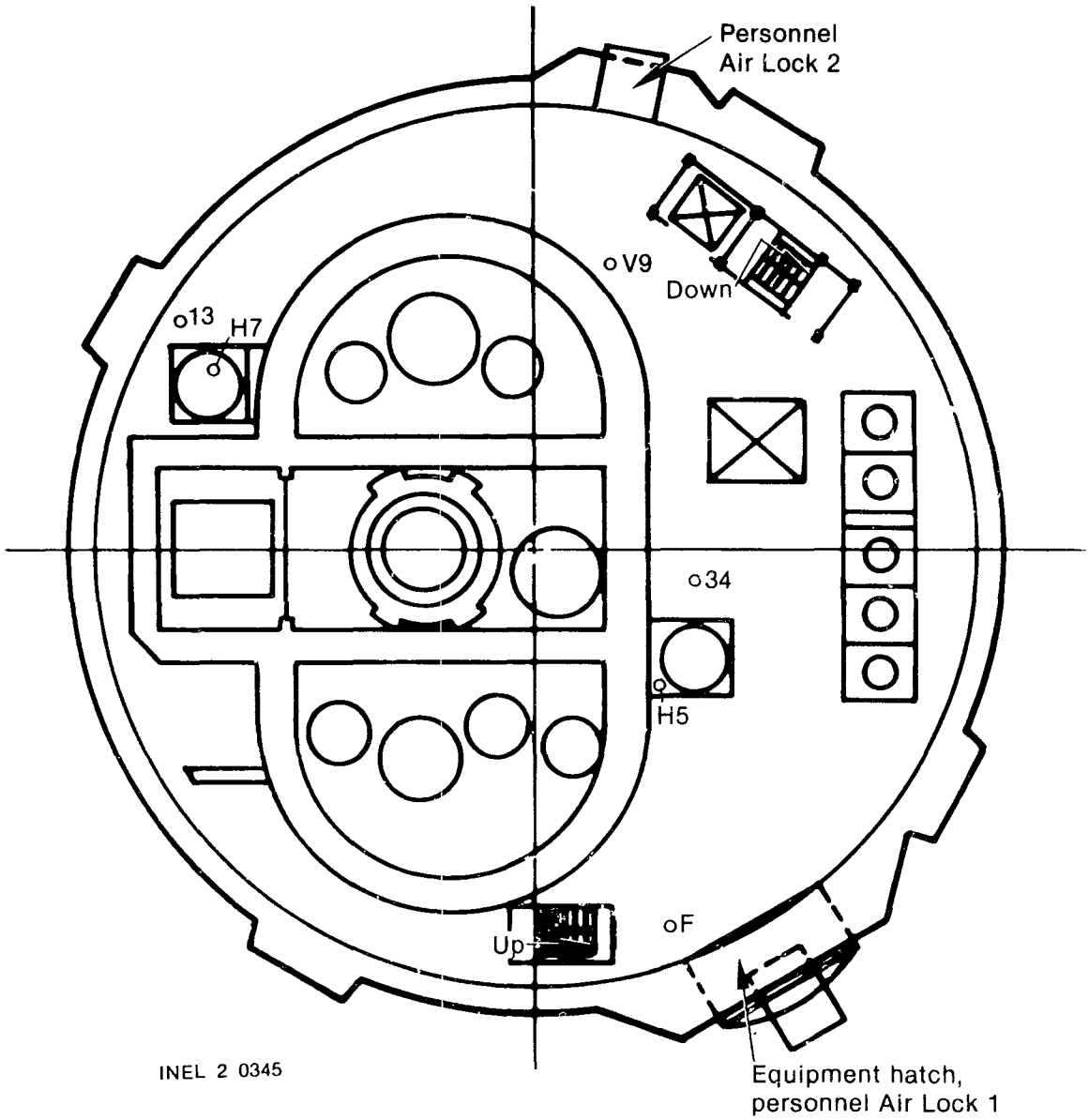

Figure 20. Gamma spectrometer measurement locations and readings on 305-ft elevation.

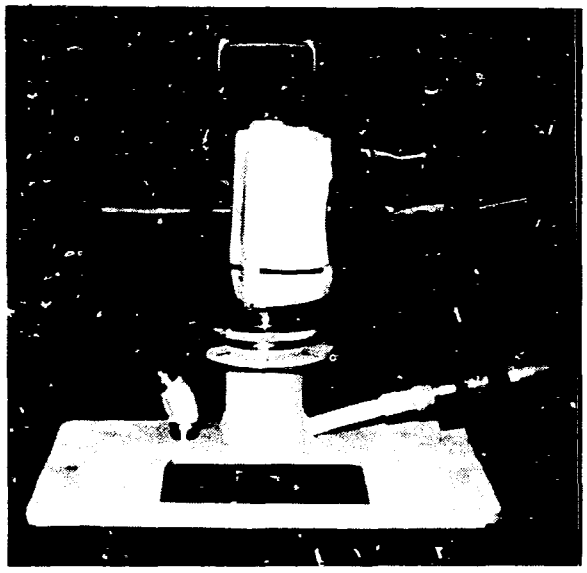

Figure 21. Surface sampler used to obtain concrete and metal core samples.

on the 305- and 347-ft elevations before and after large-scale decontamination. The information gained from this activity is of major importance for determining dispersion of radionuclides over various surfaces, for determining radionuclide penetration depth, and for evaluating the effectiveness of the large-scale decontamination. Figures 22 and 23 show the location of surface samples within the reactor building.

Accident Evaluation. The Accident Evaluation effort estimates temperatures reached in various regions of the reactor building during the accident and subsequent hydrogen burn, and characterizes the effects of these temperatures on equipment and structures. The effort concentrated on determining the temperature that must have been attained to produce the damage visible in photographs taken during reactor building entries. The extent of damage to control and communication systems cables and auxiliary equipment in the reactor building by exposure to these abnormal temperatures was also investigated.

During Entry 6, samples were obtained from inside the reactor building including radiation barrier rope, nylon rope, a plastic radiation sign, paint chips, plastic buttons from the auxiliary fuel handling bridge control panel, and a telephone and cord. Experiments were performed to determine the amount of heat required to cause the observed damage. As an example, experimental results and manufacturer's data for the telephone headset body indicate that a temperature of 221°F would cause a telephone to deform under its own weight. The damaged telephone is shown in Figure 24. The estimated temperature for the telephone location in the building is at least 221°F.

A draft report was completed that summarizes the temperature estimates derived from experiments, known material properties, and photographs. This report will be issued as GEND-020, *TMI-2 Reactor Building Temperature Report*. The report notes that the estimated temperatures increased with elevation in the building. The temperature estimates range from 360 to 500°F.

As part of the hydrogen burn damage assessment program, a study of reactor building entry photographs was undertaken to determine the extent and distribution of burn damage in the reactor building. Researchers evaluated thermal damage to wood, plastics, cable insulation, rubber, paper, and paint, and effects of pressure on floor grates, elevator doors, and stairwell doors. Observed overpressure damage is localized to regions around the enclosed elevator and stairwell complex. Very little thermal damage was observed on the 305-ft elevation. Thermal damage was observed in all areas on the 347-ft elevation except the west quadrant between the D-rings and the reactor building liner. Entry teams found charred wood, melted plastic, nylon ropes, polyethylene sheeting, electrical cable insulation, and burnt rags. Figure 25 shows the area inside the head storage stand where both burned and unburned rags were found. The unburned rags may have been wet or the flames causing the damage may not have been uniformly distributed. Thermal damage was observed to be widespread on the polar crane, particularly on the electrical cable and bus bar insulation. Several pieces of the bus bar had fallen to the 347-ft elevation, apparently because the insulating support members were weakened by heat from the burn. Inside the polar crane cab, the operator's chair and the instrument panel buttons were melted and charred. A report on this assessment work has been prepared and will be published as GEND-023, *Forensic Investigation of Thermally Exposed Materials in TMI-2*. The damage observed is consistent with the temperatures estimated previously in GEND-020.

As a result of questions raised by the investigation of thermal damage, an entry was made to

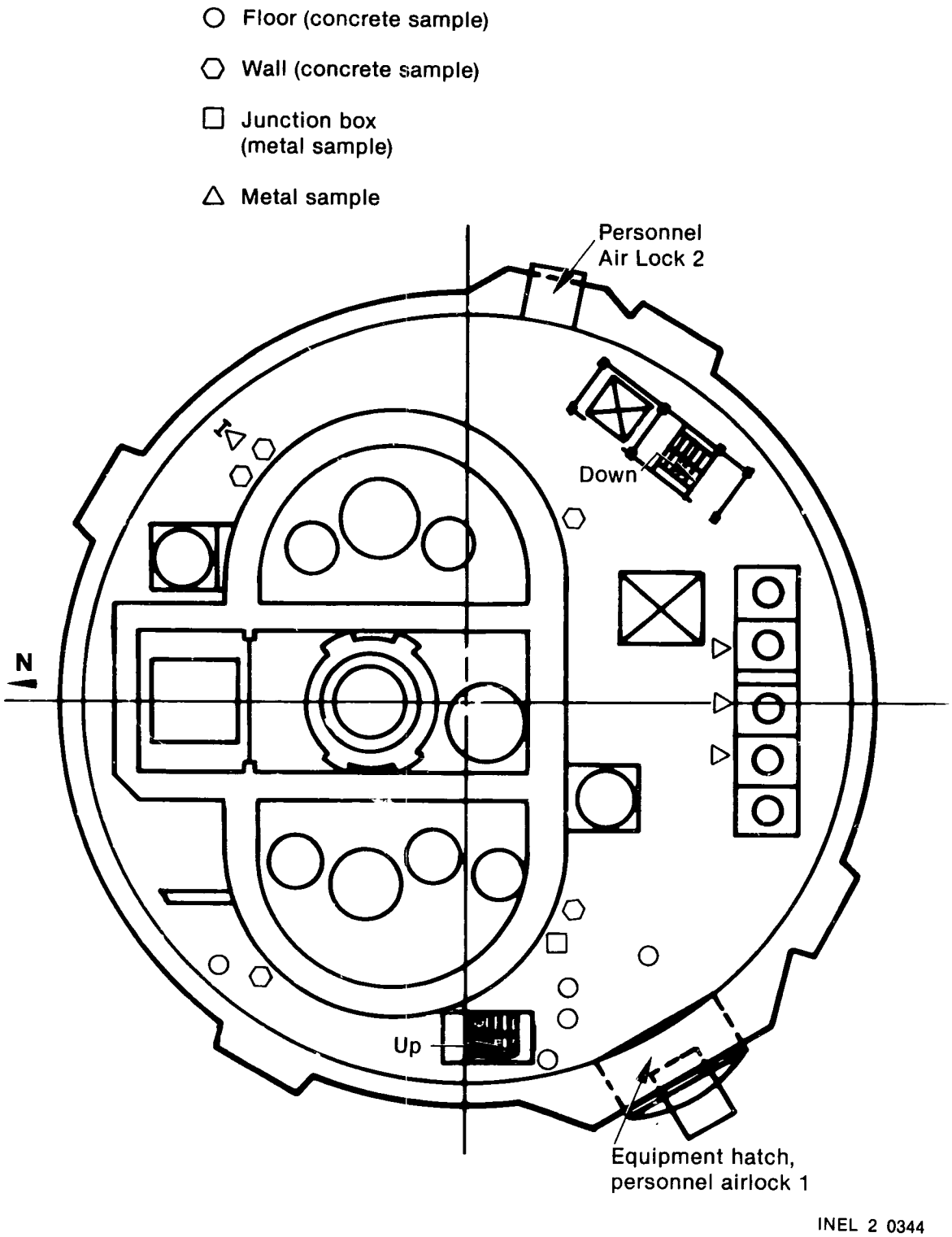

Figure 22. Surface sample locations on 305-ft elevation.

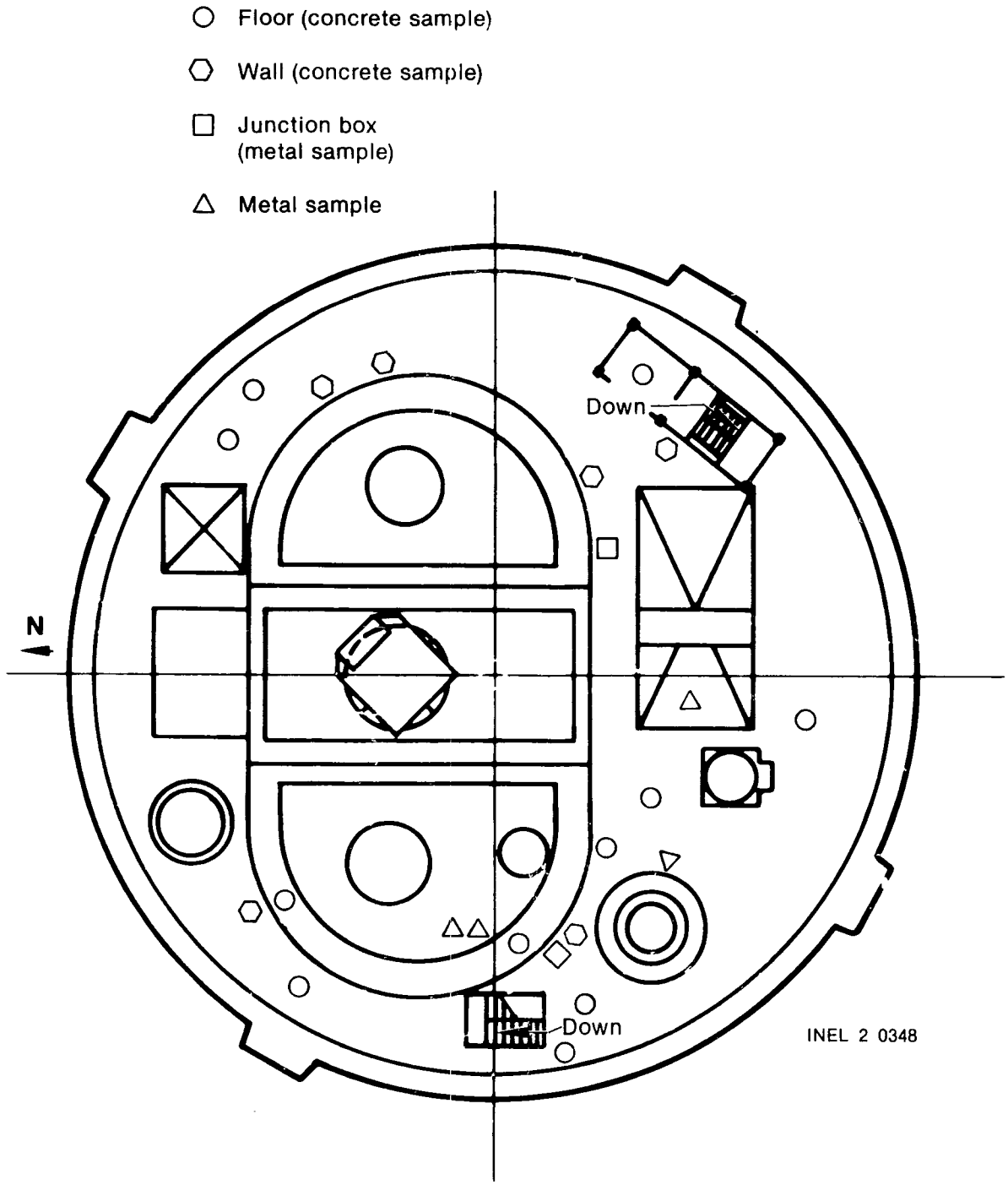

Figure 23. Surface sample locations on 347-ft elevation.

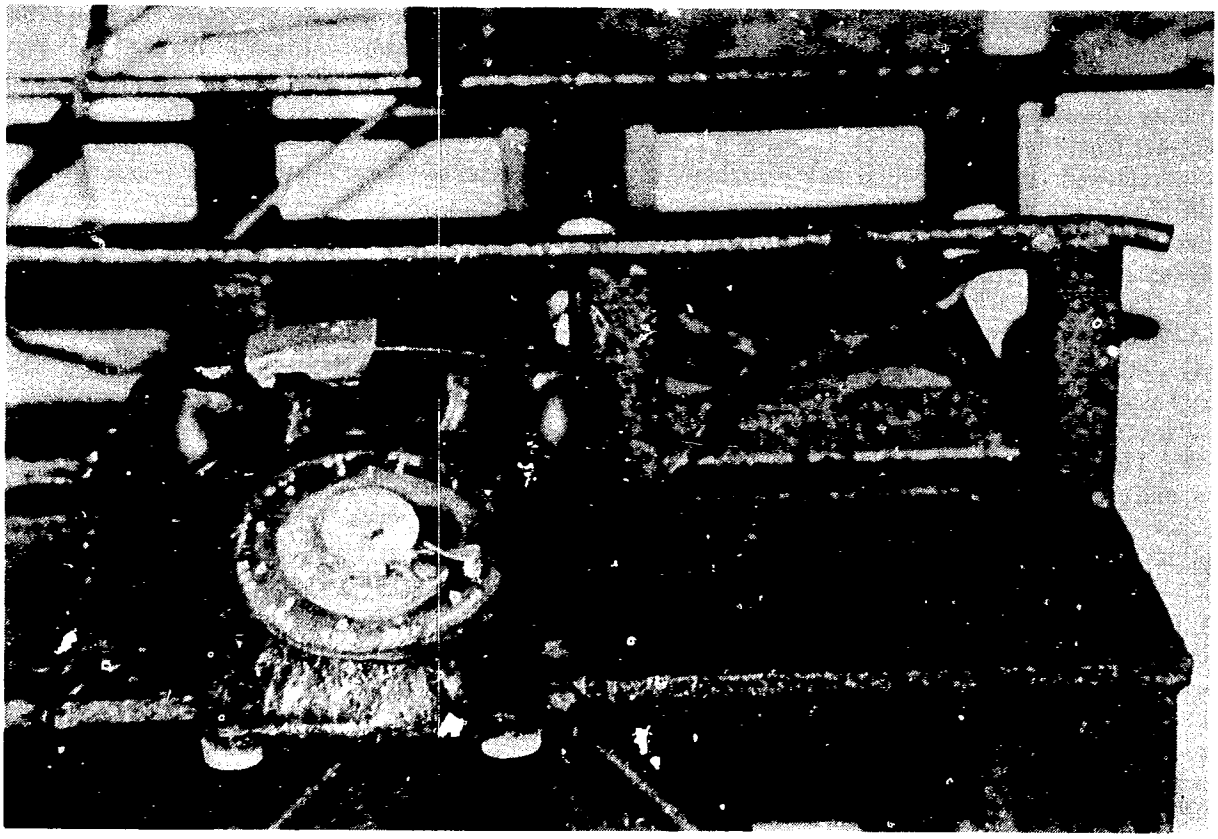

Figure 24. Damaged telephone on 347-ft elevation.

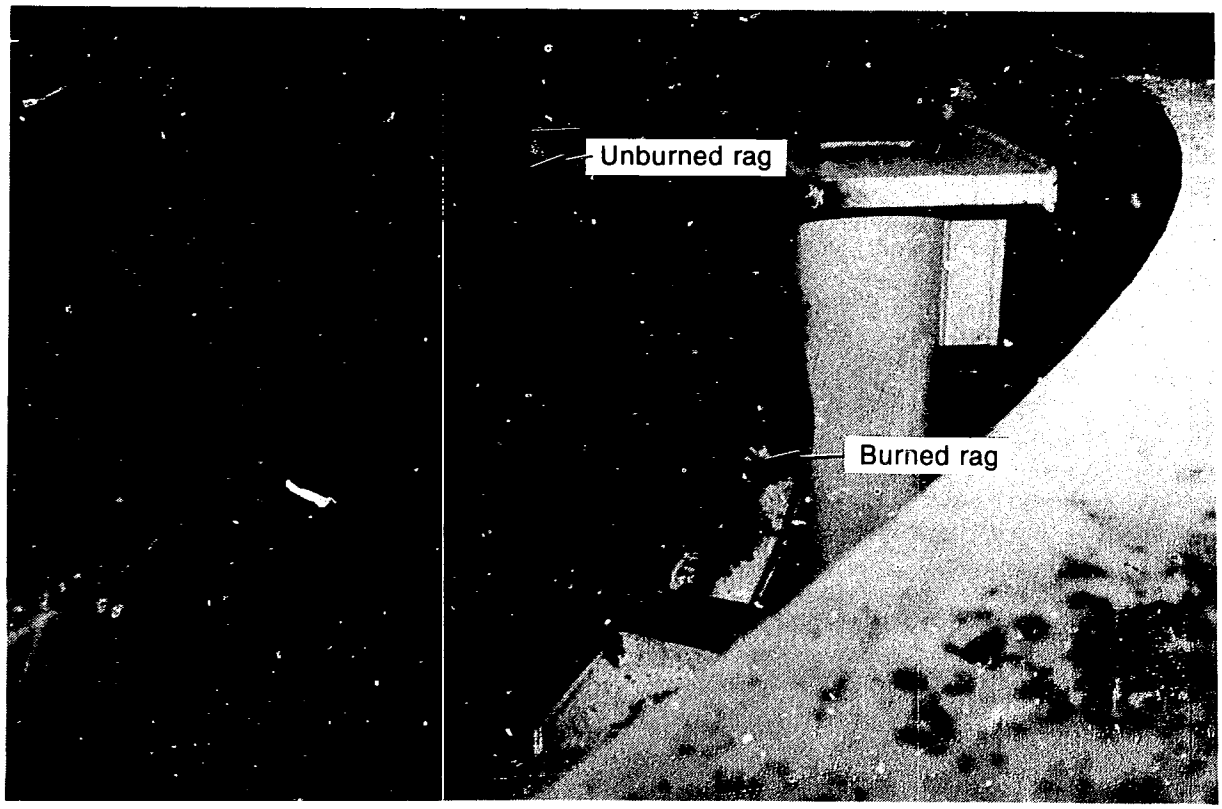

Figure 25. Burned and unburned rags inside the head storage area.

photograph more evidence of thermal damage and to take samples of thermally affected materials. The samples included charred rope, plywood, a rubber elevator-door gasket, and a fire extinguisher from the polar crane. In addition, a notch was removed from a plywood box to determine the char depth and temperature exposure. Extensive photographic surveys were taken of charred wood, melted plastic, charred rubber, and melted and charred electrical insulation on the polar crane and the 305- and 347-ft elevations. During 1982, the polar crane pendant will be removed and studied to determine what temperatures may have existed at elevations above the 347-ft elevation. This additional information will be used in the ongoing hydrogen burn damage assessment program to characterize the extent and distribution of damage in the reactor building.

Any damage to the components within the reactor building will be assessed and this information will be used to improve understanding of the accident by identifying areas affected by high temperature, high pressure, and caustic sprays. In addition, these data will contribute information about areas where design criteria must be re-evaluated.

Decontamination Effectiveness Evaluation. Development and planning for a large-scale decontamination experiment was initiated during 1981. Efforts were directed toward obtaining as much information as possible prior to decontamination. Data acquisition and maintenance activities performed during reactor building Entries 17 through 26 were in support of large-scale decontamination. The decontamination of the 305-and 347-ft elevations and the polar crane will begin early in 1982. Predecontamination surface sampling was performed and is described in the surface deposition section. Other work supporting the decontamination experiment is described in the reactor building entry program section under Entries 17 through 26. Most decontamination work performed during the reporting period was preparatory in nature. Technical details on the experiment will be published in topical reports in 1982, and in the next annual report.

Reactor Building Entry Summaries. Successive monthly entries have been made into the TMI Unit 2 reactor building throughout most of the reporting period. More frequent entries were made starting in October 1981 in preparation for the Large-Scale Decontamination Experiment. The Radiation and Environment Program has directed its efforts toward sample and data acquisition in order to obtain all information available prior to decontamination.

A total of 24 successful reactor building entries have been completed since the beginning of the entry program. The following are highlights of the accomplishments made during those entries conducted during the reporting period. Prior entries were reported in the FY-1980 Annual Report.

Entry 3—This entry was conducted October 16, 1980. Additional beta, gamma, and neutron surveys were performed to supplement the data obtained on previous entries. In addition, several maintenance tasks were completed including operational test of both equipment hatch doors, removal and replacement of vibration monitors YM-AMP-7023 and YM-AMP-7025, and removal of a source range B preamplifier. Figure 26 shows a typical reactor building entry through personnel airlock 2.

Entry 4—This entry was conducted on November 13, 1980. Additional beta and gamma surveys were performed on the 305- and 347-ft elevations. Photographs were obtained of crushed 55-gal drums, a melted telephone and cord, sump water at the open and enclosed stairwells, and the in-core instrumentation seal table. Figure 27 shows the damaged enclosed stairwell door and Figure 28 shows the sump water at the open stairwell. Other tasks performed included the examination of the area around the reactor head for boron crystal accumulation and a decontamination test on the 305-ft elevation. Power receptacles on the 347-ft elevation were tested and found to be energized, and receptacles tested on the 305-ft elevation were verified to be de-energized.

Entry 5—This entry was conducted on December 11, 1980. Beta and gamma surveys were performed on the 305- and 347-ft elevations, the reactor head and fuel pool area, and the polar crane access ladder. These surveys completed most of the general area surveys started in previous entries and also completed a substantial portion of the hot-spot surveys.

Other entry activities included inspection of the polar crane for damage and various photographic and radiation surveys. A total of 108 photographs

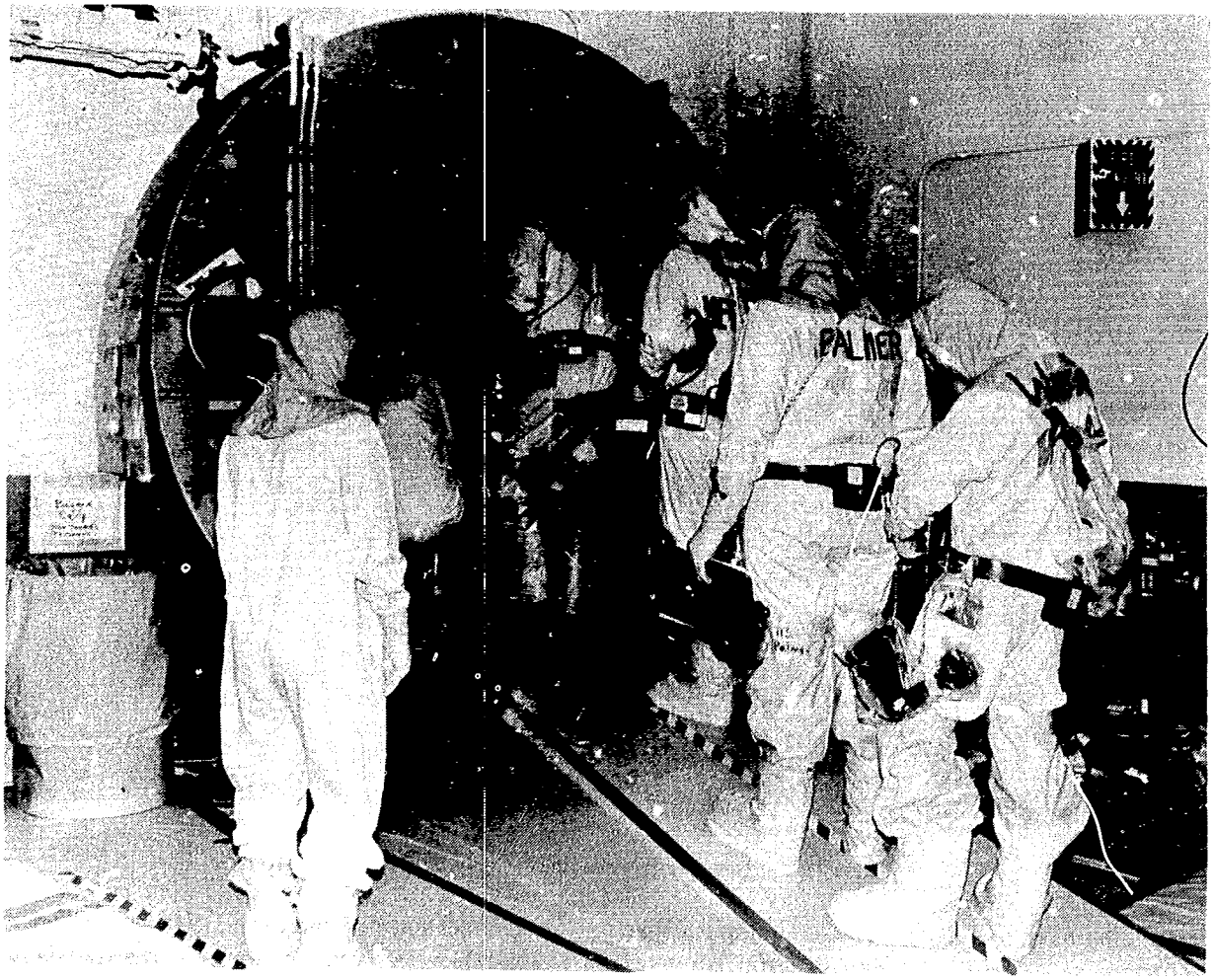

Figure 26. Technicians entering reactor building personnel airlock 2 (Photo by GPU Nuclear).

were taken to aid in general area characterization. Entry team members performed decontamination tests at designated locations on the 347-ft elevation. The decontamination tests evaluated the use of low-pressure hot water flush, an acidic decontamination solution, and a strippable coating technique. As a result of these tests, recommendations were made for a primary and an alternate large-scale decontamination technique and for further experimentation requirements. Figure 29 shows technicians using contamination control techniques following preliminary decontamination work.

Entry 6—This entry was conducted over a two-day period February 3 and 4, 1981. Tasks included the installation of eight closed-circuit TV cameras, decontamination testing on the 347-ft elevation, work on the source range monitor, and loose sample removal. The loose samples obtained included paint chips from the east and west side of the D-rings on the 347-ft elevation, a radiation sign, four control panel buttons from the auxiliary fuel handling bridge, a radiation barrier rope, a telephone, and a charred operator's manual.

These samples were shipped to EG&G Idaho for experimental testing to aid in the reactor building temperature and damage assessment.

Entry 7—This entry was conducted over a three-day period, March 17, 18, and 19, 1981. The entry teams obtained three 1-l and one 150-ml sump samples. The three 1-l samples were shipped to Oak Ridge National Laboratory in Tennessee for analysis in preparation for Submerged Demineralizer System (SDS) processing activities. The 150-ml sample was shipped to EG&G Idaho and archived at the INEL.

A zeolite resin column was installed; it obtained five gallons of processed effluent from the reactor

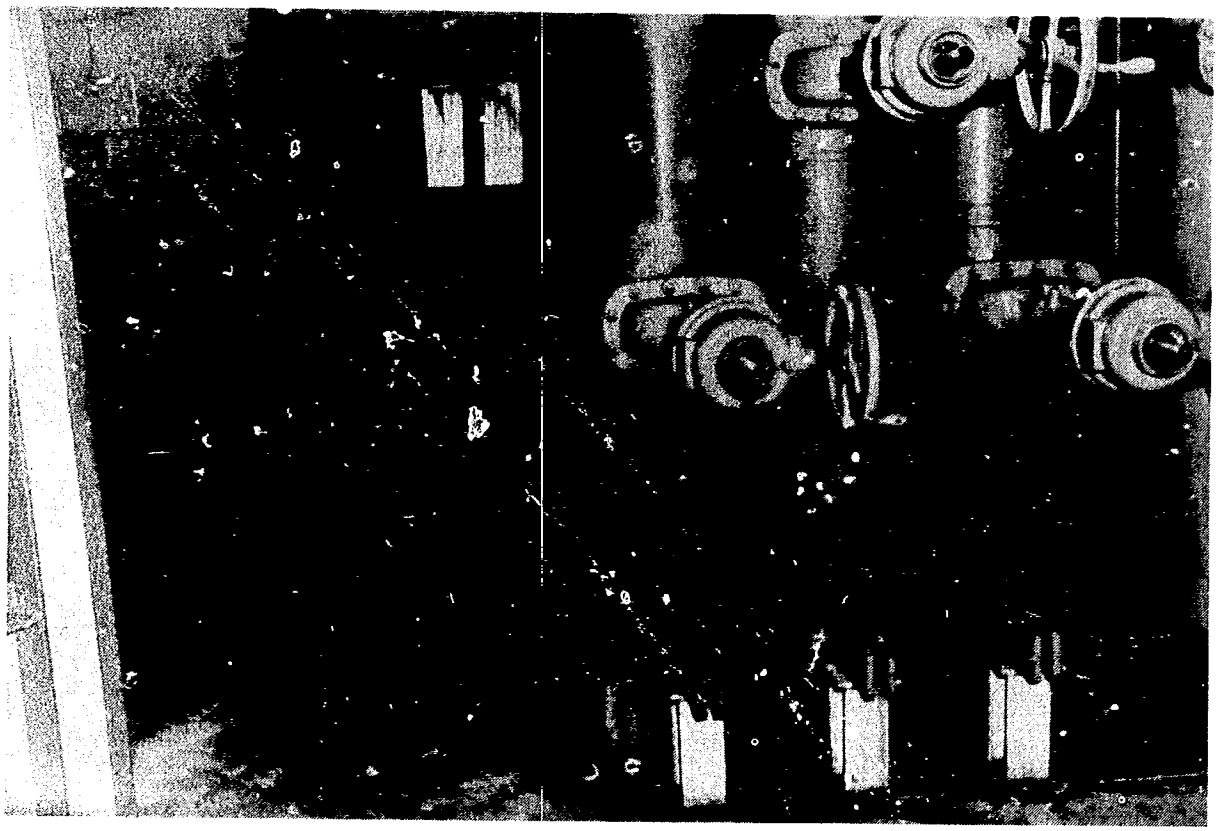

Figure 27. Damaged enclosed stairwell door on 305-ft elevation.

building basement water. This sampling was performed as a part of preliminary testing to determine the most effective zeolite mix and operating requirements for the SDS.

The teams performed a detailed radiation survey and obtained pictures of the in-core instrument tunnel area to support the sump-surface suction plan for the SDS. A survey of the control rod drive mechanism (CRDM) structure was also conducted. One CRDM inspection plate was removed to allow a remote survey of the CRDM service structure internals using an Eberline E520 gamma radiation meter. Figure 30 shows a technician performing a radiation survey on the CRDM service structure.

The teams performed plant surveillance of large purge valves, obtained a high-volume air sample on the 305-ft elevation, and repaired the LPR-3B contactor to obtain additional floor lights for the 347-ft elevation.

Entry 8—This entry was conducted on April 8, 1981. A photographic survey and visual reconnaissance of the open stairwell area on the 305-ft elevation was performed to establish dimensional requirements for lowering the SDS surface suction pump into the reactor building basement water. Two closed-circuit TV cameras (Numbers 4 and 7) installed in Entry 6 were repositioned and the power source for Camera 7 was changed.

Entry 9—This entry was conducted on April 30, 1981. The inside flange of penetration R-561 was removed in preparation for Entry 10 decontamination experiments. The removal of this flange allowed access for direct hookup to clean air lines. The surface suction pump for the SDS was installed through the open stairwell. Photographs were obtained of the surface suction pump installation and electrical penetrations R-504 and R-509. Photographs of the electrical penetrations were to aid in the determination of instrumentation and cable failure.

Entry 10—This entry was conducted on May 14, 1981. Safety equipment was installed on accessible portions of the polar crane. Radiation surveys of the control rod drive mechanism service

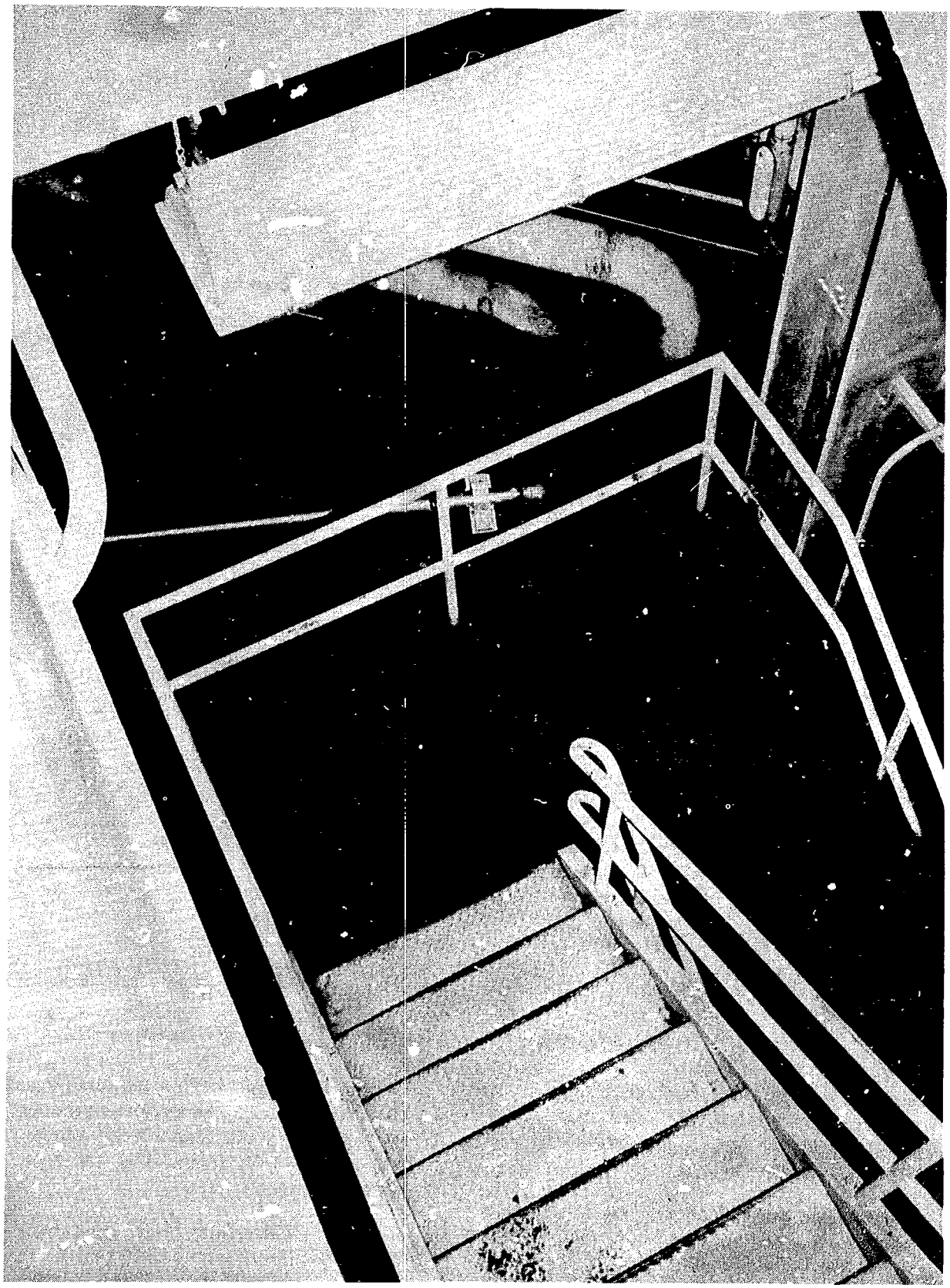

Figure 28. Water in reactor building basement as seen from the open stairwell.

Figure 29. Technicians removing outer shoe covers at entrance to contamination-controlled area.

structure internals were conducted and five smear samples were obtained. The smears were sent to Science Applications, Inc., for analysis of radionuclide content.

Entry team members obtained eight sump water samples, six liquid and two sludge samples from the reactor building basement, using the special water and sludge sampling device (see Figure 18). Other team members performed the first large-scale decontamination experiment on the 305-ft elevation, using high- and low-pressure spray. The decontamination test area was also cleaned up; air and water lines at penetration R-561 were disconnected and the decontamination test area was surveyed.

Entry 11—This entry was conducted on May 28, 1981. Entry team members installed polar crane safety equipment, replaced the damaged radiation monitor HP-R-213 on the 347-ft elevation, and replaced the GAI-tronics paging telephones on

Figure 30. Technician performs radiation survey on control rod drive mechanism service structure platform.

both elevations. Radiation and photographic surveys were conducted of the pressure operated relief valve (PORV) and other general areas within D-ring A. Hoses were connected to the 626 penetration in preparation for startup of the Submerged Demineralizer System. The teams transferred a portable gamma spectrometer into the reactor building and obtained three area spectra and three background spectra floor scans on the 305-ft elevation.

Entry 12—This entry was conducted on June 25, 1981. Closed-circuit TV Camera 4 was replaced and the connectors on Camera 7 were repaired. Entry team members performed maintenance and modification tasks on lighting panel LPR-3A and the GAI-tronics paging system, and installed temporary lighting in the enclosed stairwell. They performed smear surveys of walls on the 305- and 347-ft elevations. They also obtained loose samples of peeling paint at the 305-ft elevation near core flood tank B, peeling paint on the electrical box at the 347-ft elevation, and paint chips that fell from the reactor building dome onto the floor north of the open stairwell at the 347-ft elevation. These paint samples were shipped to EG&G Idaho for analysis. Analysis results were used in the characterization of surface deposition.

Entry 13—This entry was conducted on July 1, 1981. Entry team members performed detailed visual, photographic, and radiation surveys of the polar crane. Figure 31 shows a technician inspecting the polar crane. This entry marks the first time personnel gained access to the polar crane bridge. Information obtained during this inspection aided in determining the parameters for refurbishing the polar crane and defined future inspection requirements.

Entry 14—This entry was conducted on July 23, 1981. Closed-circuit TV Camera 2 was replaced and connectors on Camera 8 were repaired. Various loose samples were obtained for surface deposition characterization. Team members obtained a 250-ml sample of water under Personnel Airlock 1 and a sample of the white crystal accumulation on the floor of the 347-ft elevation by the in-core instrumentation seal table. Although they had planned to obtain water samples from the neutron shield tanks, entry team members found that the tanks were empty.

Photographic surveys were made of the air coolers and of the following instrumentation: solenoid valve AH-EP-5039, solenoid valve AH-V74, flow transmitters MU-10-FT1 and MU-10-FT2, and pressure sensor NM-PS-1454. Beta and gamma radiation and smear surveys were conducted on the reactor vessel service structure and the refueling pool floor. Team members removed core flood tank transducers CF1-PT4 and CF2-LT4 for analysis, and installed a continuous air monitor and an area radiation monitor.

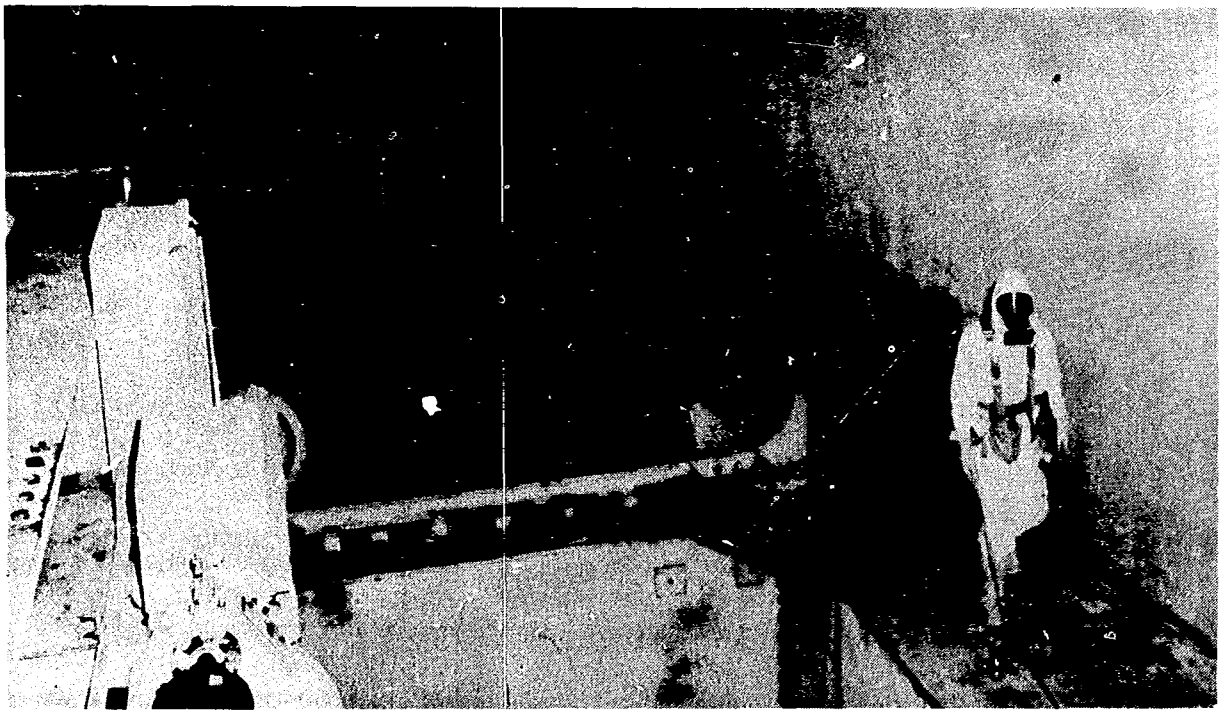

Figure 31. Technician inspects polar crane.

Entry 15—This entry was conducted on August 27, 1981. Gamma scans were obtained of designated floor locations on the 305-ft elevation. Overhead beta, gamma, and smear surveys were also conducted on core flood tanks 1A and 1B and on platforms on the east side of the reactor building. In addition, surveys were conducted in the deep end of the refueling pool and around the open stairwell, and smear surveys were performed on the mezzanine. Team 3 inspected and photographed the steam generator cleaning line. Reactor building nitrogen pressure alarm switch NM-PS-1454 was replaced, and flow transmitter MU-10-FT1 was removed. Team 5 performed the first inspection of the upper portion of the air cooling units. The team photographed the fan motors and thermocouple readings. Because of the high radiation fields at the top of the air coolers (2 to 3 R/h), entry members were limited to short stay-times.

Entry 16—This entry was conducted on September 24, 1981. An extensive inventory was performed to account for the defueling tools in the reactor building. Photographs were taken of the defueling tools and of the penetrations to be used to support large-scale decontamination of the 305-ft elevation. Beta and gamma radiation and smear surveys were conducted on the 347-ft elevation, surface of the indexing fixture, reactor vessel head storage stand, and in-core instrumentation seal table. Team members obtained a single 125-ml sump water sludge sample at the open stairwell using EG&G Idaho's single-level water and sludge sampling device. Figure 32 shows the single-level sump sampling device. Personnel inspected the air cooler fan motors, removed three fan motor covers, and obtained resistance readings from Air Cooler Units C and E. Photographs were taken during the air sample line walk-down of penetrations R-553, R-554, R-555, R-562, and other electrical penetrations.

The sump water sludge sample taken during this entry was shipped to EG&G Idaho for analysis. A final report documenting analysis results will be completed during 1982.

Entry 17—This entry was conducted on October 27, 1981. Entry teams installed the sump refill line to penetration R-565, and reinstalled the penetration R-561 flange. A section of open grating in the south quadrant of the reactor building on the 347-ft elevation was removed in preparation for installing the spider staging required for the large-scale decontamination experiments and detailed polar crane inspection. In addition, miscellaneous equipment was moved

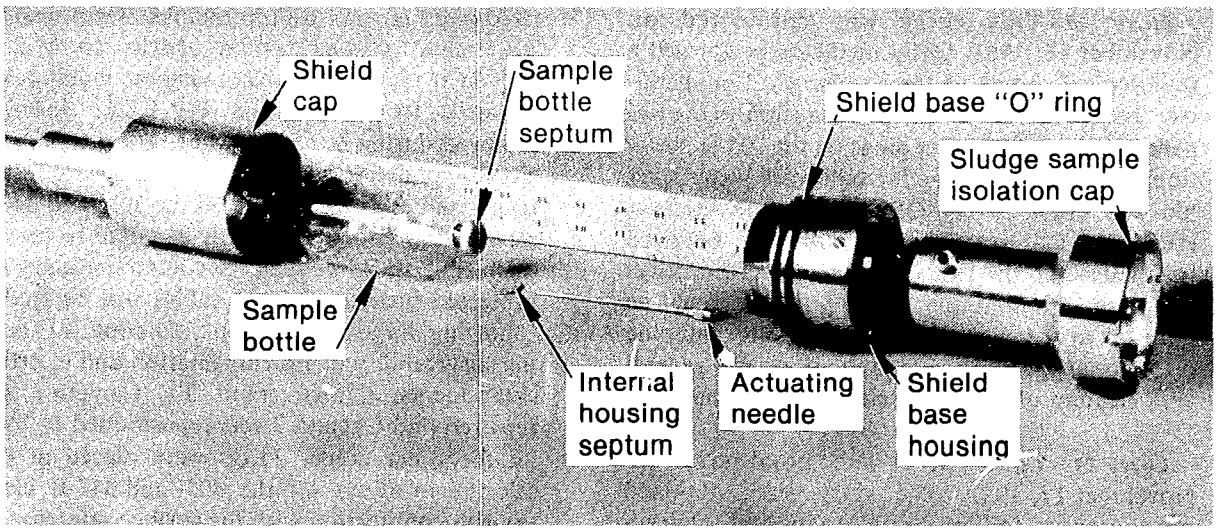

Figure 32. Single-level sump sampling device.

and the entry team members began clearing floors on the 305- and 347-ft elevations in preparation for decontamination. The outlets on the 305-ft elevation were energized, a section of mirror insulation was removed, and the mechanical snubbers were inspected. Figure 33 shows the extent of corrosion on a mechanical snubber on the 305-ft elevation.

Entry 18—This entry was conducted on October 29, 1981. The team obtained gamma spectra measurements with a portable gamma spectrometer. A total of 10 spectra were obtained; these included eight spectra of the air coolers and two spectra of the floor by the open stairwell. Team members cleared general floor areas in preparation for decontamination of the 305-ft elevation.

Entry 19—This entry was conducted on November 5, 1981. The team conducted radiation surveys, general cleanup, and trash removal on the 305- and 347-ft elevations.

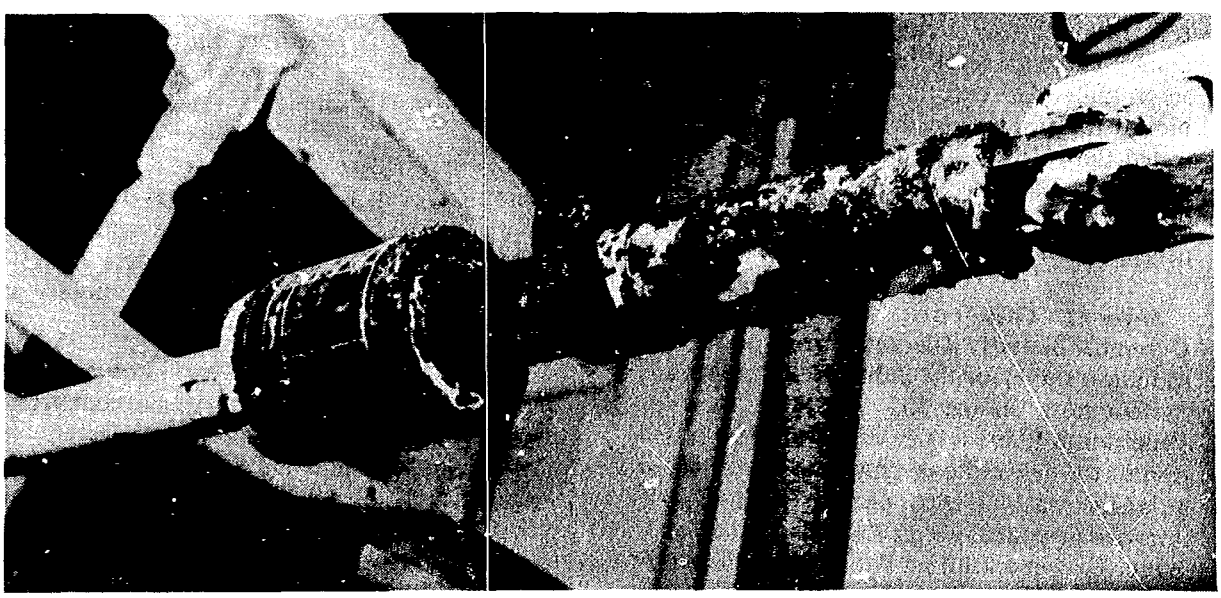

Figure 33. Corroded mechanical snubber on 305-ft elevation.

Entry 20—This entry was conducted on November 13, 1981. Entry members performed a radiological survey of the Submerged Demineralizer System line from the open stairwell to the 626 penetration and of other areas on the 305-ft elevation. An equipment hatch condensate water sample was obtained for GPU. Radiation monitor HP-R-212 and solenoid AH-V74 were removed for analysis in the Instrumentation and Electrical Program. Photographs of the 347-ft elevation were taken for characterizing the reactor building prior to large-scale decontamination, and general area cleanup of the 305-ft elevation continued.

Entry 21—This entry was conducted on November 17, 1981. The entry team obtained photographs for predecontamination characterization of the reactor building on the 305- and 347-ft elevations. Personnel studied the polar crane area in preparation for the installation of the spider lift which will be used to move equipment from the 305-ft to the 347-ft elevation and from both levels to the crane. A water sample was obtained from the polar crane at the request of the TIO. This sample will be used in the characterization of fission product transport in water on reactor building surfaces. In addition, a partial overhaul inspection of the polar crane was conducted. Closed-circuit TV Camera 6 was removed and the ramp at Personnel Airlock 2 was extended to facilitate equipment movement.

Entry 22—This entry was conducted on November 20, 1981. Entry team members performed another overhaul inspection of the polar crane. The high-reach scissor lift, to be used as scaffolding for decontamination workers, was moved into the reactor building. Team members tested the video equipment to be used for videotaping the decontamination activities. The test indicated that more light was necessary to produce acceptable video pictures.

Entry 23—This entry was conducted on December 3, 1981. The entry team performed a radiation survey of the Submerged Demineralizer System hose on the 305- and 347-ft elevations. Penetration R-507 was modified to allow installation of the new radio communication system, and a ladder was installed on the polar crane to improve personnel access for future work on the crane. Gooseneck lifting devices were installed to facilitate lifting equipment to the crane.

Entry 24—This entry was conducted on December 9, 1981. Entry team members obtained fixed-point air and tritium samples. Data reported by Bechtel showed tritium activity to be 2.0 x 10^{-6} μCi/ml. A new area radiation monitor was installed to replace the HP-R-212 monitor removed during Entry 20. Penetration R-507, the closed-circuit TV junction box, and several instruments and electrical cables on the 305- and 347-ft elevations were covered with herculite to protect them during large-scale decontamination. The protected instruments and cables will be studied following large-scale decontamination to assess the survivability of instrumentation and electrical components. Closed-circuit TV Camera 6 was repaired and Camera 7 was repositioned to focus on the polar crane. TLDs were placed at preselected locations on the 305- and 347-ft elevations in conjunction with the surface sampling. In addition, an inventory was taken of the transient combustible materials in the reactor building for evaluation of potential fire hazard.

Entry 25—This entry was conducted on December 15, 1981. The entry team obtained photographs and samples of heat-affected items (e.g. wood, paper, plastic) on the 305- and 347-ft elevations for characterization of hydrogen burn damage. The surface sampler was used to obtain concrete, steel, and paint surface samples at 25 locations on the 347-ft elevation for characterization of radionuclide surface deposition. The samples will be compared to samples taken from the same locations after large-scale decontamination to assess its effectiveness. Gamma spectra were obtained of the floor at five locations on the 305-ft elevation. The TLDs placed on the 305- and 347-ft elevations during Entry 24 were removed. These tasks were in support of the TI&EP reactor building characterization program. A cable was removed from radiation monitor HP-R-214 for analysis. Following the cable removal, a plastic barrel was placed over the monitor and sealed to protect the instrument during large-scale decontamination. A tritium sampler and a high-volume air sampler were started on the 347-ft elevation.

Entry 26—This entry was conducted on December 17, 1981. The entry team completed the remaining 15 surface samples of concrete, steel, and paint for characterization of radionuclide surface deposition. A new radio communication system was tested. In general, good results were achieved; however, when team members were shielded from the antennas by building structures, communication became intermittent. Installation of additional antennas is being considered. Additional gamma radiation surveys were made at

12 points on the 305-ft elevation. Air and tritium samples were obtained from the sampler set up during Entry 25. The Bechtel entry data showed tritium activity to be 1.6×10^{-6} μCi/ml.

The entry program will continue with increased frequency of entries in 1982 to perform decontamination, repair the polar crane, and prepare for pre-head-lift examination.

Dosimetry and Instrumentation. The purpose of this program activity is to accelerate technology development related to personnel dosimetry and health physics instrumentation at TMI. This information is necessary to understand and measure the complex and changing radiation fields encountered during reactor building manned entries. Knowledge of measured personnel dose provides for the improved control necessary to ensure adherence to As Low As Reasonably Achievable (ALARA) personnel exposure requirements.

In order to evaluate and calibrate existing portable survey instrumentation, several portable HP survey instruments were received for testing and evaluation at INEL. The instruments include the Eberline PIC-6, RO-2A, and teletector survey instruments. Design and fabrication of an intermediate prototype beta spectrometer and dose rate instrument have been completed and the instruments are undergoing field testing at INEL.

The response characteristics and calibration of the INEL-developed personnel dosimeter were completed by exposure to GPU's ^{204}Tl, ^{147}Pm, and ^{90}Sr/Y beta sources and the ^{137}Cs gamma sources. The response of the dosimeter to pure beta and gamma exposures and to a large variety of mixed fields has been determined.

A review of existing dosimetry systems was performed to improve accuracy of beta dose measurements in the high-energy, high-flux beta fields within the reactor building. Each of the five dosimeters listed below have been exposed to a variety of mixed beta-gamma fields and the responses compared.

- Harshaw 2-chip badge now in service
- Harshaw 4-chip badge as it becomes available
- Panasonic badge
- Landaur film badge
- New INEL badge.

Support was provided for the November 13, 1980, TMI-2 reactor building entry by supplying INEL dosimeters to be worn with the Panasonic and Harshaw 2-chip badges. New beta calibration sources at TMI were calibrated with the INEL thermal luminescent dosimeters.

During December 1980, a report was presented to GPU on the evaluation in which a system comparable to the INEL dosimetry system was suggested for use at TMI. The GEND-004 report, *Interim Status Report of the TMI Personnel Dosimetry Project*, was published in June 1981.

OFF-SITE CORE EXAMINATION

The Off-Site Core Examination Program was established in October 1981. This new program supports analysis, characterization, archiving, and storage of fuel and core debris samples, as well as nonfuel samples, from the TMI-2 accident and cleanup. Analysis will contribute to understanding the extent of the TMI-2 accident and its effects on fuel and core material.

Scope

The DOE selected the INEL to provide facilities and to plan and manage the archiving, repackaging, and examination of preliminary samples of the fuel from TMI-2. The program will also select an appropriate facility at the INEL where program work can be accomplished. In addition, the program will develop procedures and quality assurance requirements for shipping, packaging, handling, and storing archive samples and components.

A primary short-term objective of the Off-Site Core Examination Program is to prepare a detailed plan for fuel and core debris sample acquisition, handling, packaging, and preliminary and detailed examination. The plan will precede implementation of work in several subtasks under the Reactor Evaluation Program.

Accomplishments

During the reporting period, work began on the "In-vessel Data Acquisition Plan." Proposed criteria for data acquisition activities were developed and were used as guidelines in preparing the Plan. The proposed criteria included the following:

- Data acquisition work that will provide information to improve upon or validate current reactor design standards
- Data and sample analysis that will provide support to the NRC for development of regulations and safety guidelines
- Program work that will facilitate code model development
- Data acquisition activities that consider cost effectiveness and practicality of actual measurements.

A draft of the first four sections of the Plan was in review at the end of the reporting period. The draft includes a discussion of the objectives of core examination, a review of the data needs and applications, and a discussion of general examination requirements.

Also during the reporting period, planning began for selection of and eventual modifications to a facility at the INEL where off-site core examination work could be conducted. Several criteria affecting facility selection were developed. These include sample material size, quantities, physical form, radiation levels, and special handling and storage needs. A general recommendation will be prepared which covers available INEL facilities and the overall approach to be used in providing the appropriate facility in a timely and economical way.

RADIOACTIVE WASTE TECHNOLOGY DEVELOPMENT

The TMI-2 accident resulted in the transfer of more than 500,000 gal of contaminated water to the Auxiliary and Fuel Handling Buildings. This water was processed through a three-stage ion exchange cleanup system called EPICOR II; the first stage is called the prefilter stage and the second and third stages are called polishing stages. The processing of the entire batch of water resulted in 50 prefilter liners highly loaded with radioactivity and 22 polishing liners with lower radioactivity levels. One of the highly loaded liners, prefilter number 16 (PF-16), was shipped to Battelle Columbus Laboratories (BCL) for characterization.

Scope

Characterization of ion exchange media from PF-16 will contribute to developing safe technology for processing high specific-activity contaminated wastes and will provide information on the shelf life of such media and their containment liners. Careful preparation and shipment preceded characterization at BCL. Once PF-16 arrived at the labs and underwent a number of analytical tests including gas sampling, visual examination, media core sampling, liquid analysis, and gamma scans.

Accomplishments

During the reporting period, BCL successfully obtained results from its characterization work which will not only help to identify the performance of the ion exchange media, but will also contribute to development of technology for safely processing contaminated ion exchange media.

Preparation and Shipment. On May 16, 1981, the PF-16 liner was transferred from the EPICOR storage area in a special lead and steel transfer device to the chemical cleaning building for venting. During the venting operation, a release of a combustible gas mixture was detected when the vent plug was partially removed. Venting was completed by removal of the vent plug for one hour on May 17, 1981. The liner was subsequently loaded into a licensed type "B" cask, the Chem Nuclear CNS-8-120 (ATCOR LL-50-100), and shipped to BCL on May 19, 1981. Figure 34 shows the PF-16 liner being loaded into the shipping cask.

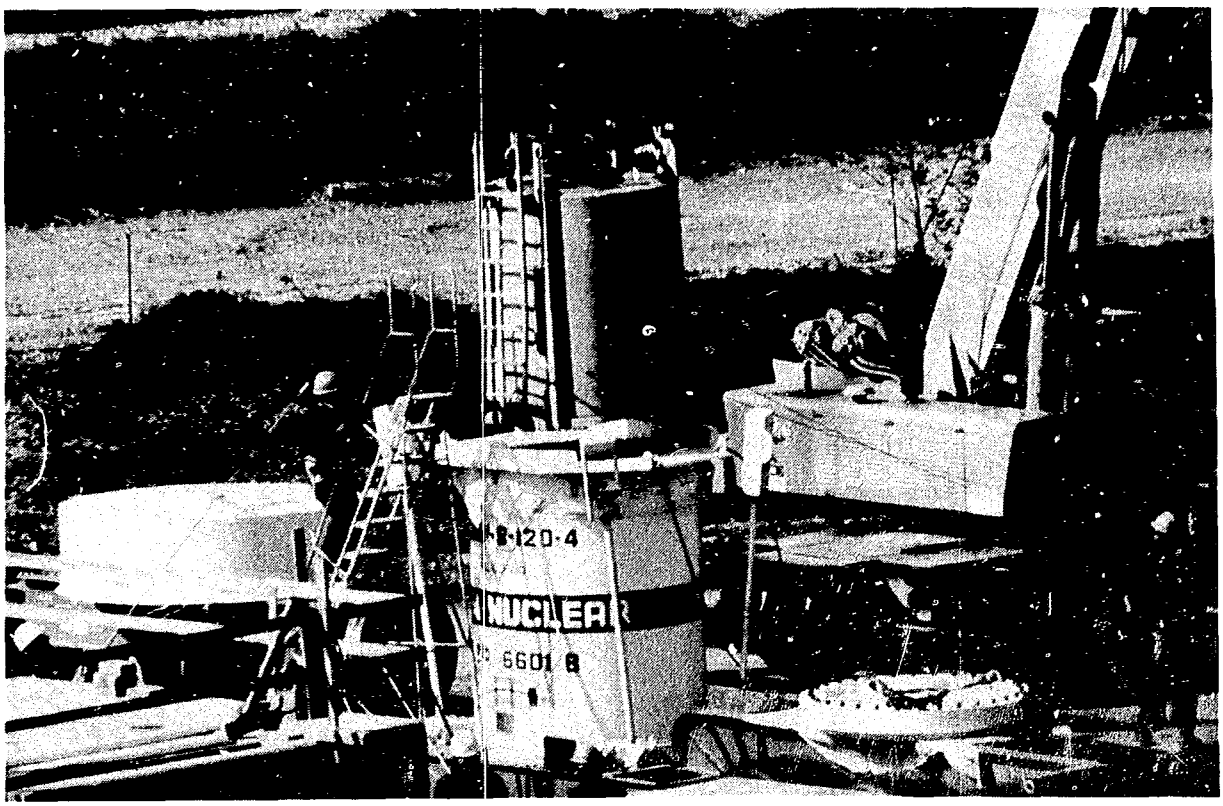

Figure 34. EPICOR II PF-16 liner loaded for shipping.

Gas Sampling. After the liner was received at BCL, technicians placed it in the BCL hot cell and situated a special gas sampling device over the liner vent plug. The vent plug was removed using the sampling device and a pressure measurement and gas sample were obtained. The pressure measurement indicated no difference in pressure (< 1 psi) from the atmospheric pressure. The gas sample was analyzed using mass spectroscopy and gas chromatography. The results are shown in Table 14. These tests confirmed the generation of combustible gas but also indicated a depletion of oxygen.

Visual Examination. The liner interior surface above the ion exchange media and the exterior surface were visually examined and found to be in good condition. However, the manway cover, which did not have a protective coating, was severely corroded.

Core Sampling. A partial core sample of the ion exchange media was removed from PF-16. Three well-defined layers were observed. Figure 35 shows samples from each sample layer. The first or top layer, about three inches deep, consisted of dry, brown, free-flowing, irregularly-shaped particles, presumably a zeolite. The second layer was approximately eight inches deep and consisted primarily of spherical, translucent particles. The lowest layer of the sample was about three inches deep but it appeared that some of the sample had been lost during the sampling process. This layer was extremely moist and consisted of both opaque and translucent particles. A contact pH reading of the third layer indicated an approximate pH of 2. Overall, the ion exchange media appeared to be in the same physical condition as when it was placed in the liner.

Liquid Analysis. The first attempt to take a liquid sample was made by running a sampling line down the effluent line of the PF-16 liner to the collection manifold. No liquid was obtained this way. However, a 500-ml liquid sample was obtained after the core sample had been taken. This liquid sample was obtained by inserting a sampling line to the bottom of the core sample hole. The sample was analyzed and the concentrations of radionuclides found are shown in Table 15.

The liquid had a pH of 5.3 and very few impurities. This pH measurement is particularly important for calculations of liner metal degradation. Precharacterization calculations were based on a much lower pH, which would have caused accelerated corrosion. However, this actual measured pH indicates that the liner would have a considerably longer shelf life before possible leakage.

Table 14. PF-16 gas sample analysis results

Gas	Volume Percent	Parts per Million by Volume
Carbon dioxide	5.52 ± 0.06	—
Argon	0.96 ± 0.05	—
Oxygen	0.20 ± 0.02	—
Nitrogen	80.6 ± 0.4	—
Carbon monoxide	0.20 ± 0.02	—
Hydrogen	12.4 ± 0.2	—
Methane	—	500 ± 2.5
Ethylene and acetylene	—	0.7 ± 0.1
Ethane	—	42 ± 4
Propylene	—	<0.1
Propane	—	6 ± 1
Isobutane	—	<0.6 ± 0.1
n-Butane	—	0.1
Hydrogen sulfide	—	<20
Carbonyl sulfide	—	<10
Sulfur dioxide	—	<10
Unknown compounds	—	<20

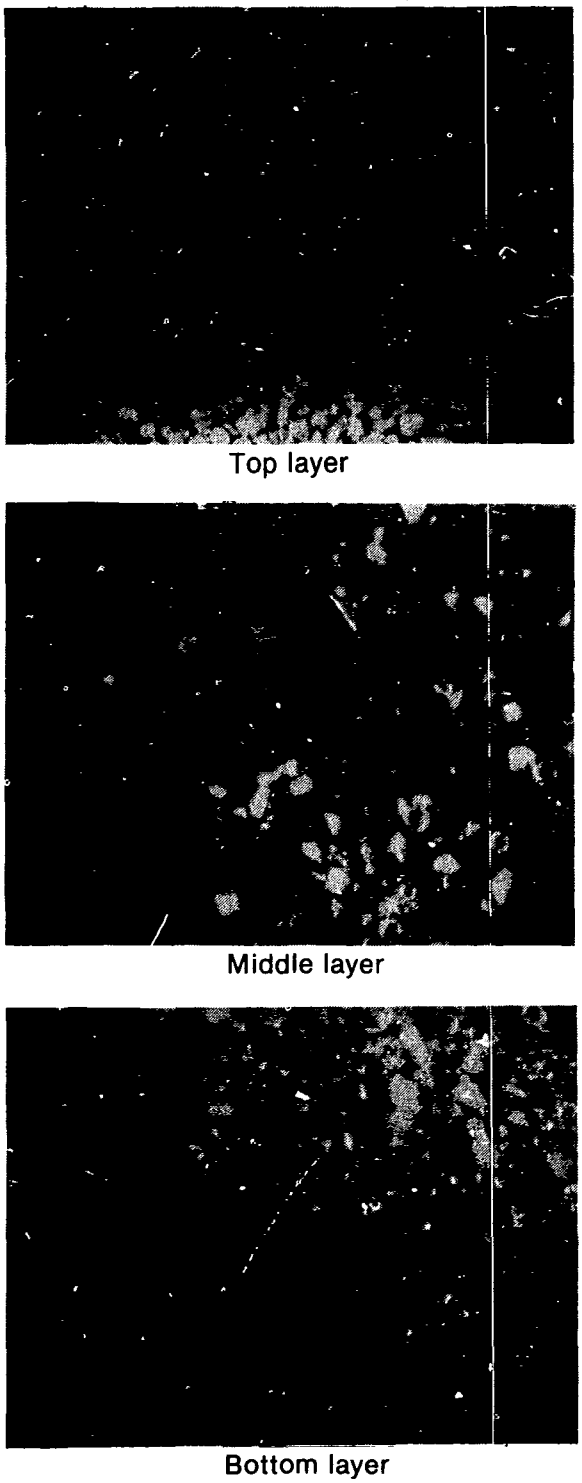

Figure 35. Three layers of PF-16 core sample (magnified).

Table 15. Radionuclide concentrations in thePF-16 liquid sample

Radionuclides	Concentrations
Na	<2000 ppb
Fe	34 ppb
P	<110 ppb
Zn	88 ppb
Mg	<20 ppb
Ca	100 ppb
Al	110 ppb
B	1.12×10^6 ppb
NH_4	<0.08 mg/ml sample
SO_4	5.2 mg/ml sample
NO_3	<0.3 mg/ml sample
Cl	<3.0 mg/ml sample

This liquid was also analyzed for gross beta and alpha activity, pH, conductivity, gamma emitting constituents, and total residue upon evaporation. The results of these analyses are shown in Table 16.

Gamma Scans. External gamma scans were performed to determine the relative deposition of gamma-emitting radionuclides. Most of the activity was concentrated in the top 3 to 6 in. of the ion-exchange media bed. Gamma spectroscopy performed at the location of the peak activity showed that most of the gamma activity is ^{137}Cs and ^{134}Cs. The maximum external radiation readings were 2800 R/h on contact, 1000 R/h at a distance of 1 ft, and 410 R/h at 3 ft.

Table 16. PF-16 preliminary liquid analysis results

Test	Results
pH	5.3 ± 0.1 at 27°C
Conductivity	30 μmho/cm at 27°C
Gross beta activity	1.77 ± 0.01E-2 μCi/ml
Gross alpha activity	5.89 ± 0.09E-4 μCi/ml[a]
Total residue upon evaporation	3.1 ± 0.1 mg/ml
Gamma-emitting constituents (qualitative analysis)	^{137}Cs, ^{134}Cs, ^{125}Sb

a. Gross alpha activity may be in error due to either contamination from the hot cell or analyzer "cross talk."

CONFIGURATION AND DOCUMENT CONTROL

Enhancement of the nuclear power industry data base depends, in great part, upon the availability of information gathered from the TMI-2 accident.

The accident generated unique information related to emergency procedures and reactor plant safety. Additional information, which is currently being gathered and processed as recovery continues, along with technological advances, will add to the collected data available. The nuclear community can use the information to produce changes where needed in nuclear safety, licensing, design, and operation.

The Configuration and Document Control (CDC) section of the TI&EP was established to obtain and store meaningful information pertinent to the TMI-2 accident and recovery effort. The CDC obtains and distributes this information within the following parameters:

- Program participants have access to the CDC data bank
- Members of the nuclear industry may obtain publications from the DOE Technical Information Center
- Members of the general public may obtain publications from the National Technical Information Service.

The implementation of an information records management system is vital to maintaining the integrity and security of the information obtained from the TMI-2 recovery.

Scope

CDC provides many of the administrative functions required by the TIO, ranging from everyday tasks such as mail and telecommunications operations to maintenance of the TI&EP archive and preparation and distribution of TIO-sponsored reports. For administrative purposes the work is organized into two major units, document control and publications.

Document control is the obvious function of the Document Control Center (DCC), which maintains the records storage and retrieval system. This system operates on the Nuclear Safety Analysis Center's (NSAC) computer system. Telephone lines link the TIO with the NSAC system, which is physically housed in Palo Alto, California. Requests for information pertaining to the TMI-2 accident, recovery effort, and research and development activities are processed by the DCC. TIO mail and telecommunications (both incoming and outgoing) are also handled by the DCC so that relevant communications can be captured for the archive.

TIO publications activities are growing concurrently with the growth of the DOE TMI-2 R&D Program. To manage and control these publications and to ensure that they are of maximum benefit to the nuclear power industry, a TIO publications capability has been developed under the CDC. This TIO publications function is designed to ensure quality documentation, whether in technical and administrative reports or in presentation materials used by TIO program personnel.

Accomplishments

Major accomplishments in both the DCC and publications areas of CDC indicate that information is being retained for archive and distributed to interested members of the nuclear industry.

Document Control. The DCC devoted efforts to enhancing overall system performance. At the end of the reporting period, the archive contained more than 7000 items and the average per-month increase in the number of items was in excess of 500. The size and growth rate of the archive demand accurate entry into the computer system; without accuracy, important items could easily be irretrievable.

To prevent such a problem, a quality assurance function has been developed: DCC supervision reviews document indexes before they are keyed into the NSAC system. Early entries, which were entered without such review, are now being reviewed and edited by DCC personnel to upgrade the overall quality of entries.

With the expansion of the TI&EP and the growth-over-time of the data bank (and with the increasing skill and accuracy of the personnel who manage it), the archive has become a valuable tool

for program participants. On a typical working day, DCC personnel receive between 5 and 10 requests for program information.

Publications. Many GEND reports, the documentation of the DOE research program, were published during the reporting period. Two differing types of GEND reports were established:

- *Formal reports:* These reports communicate information of lasting importance to the broad technical and scientific community, and generally include conclusions and recommendations based on a completed research project.
- *Informal reports:* These reports communicate information of a preliminary nature to selected program participants and a small government/industry audience and generally document only part of an overall project.

By the end of the reporting period, 13 formal reports (including one published in two volumes) and 12 informal reports had been published (all are listed in Table 17).

Another major publications effort was the TI&EP *Update*, a technical newsletter. During the reporting period, three issues were published. These *Update* issues covered a variety of technical topics. Nearly 2000 people are currently on the TI&EP *Update* distribution list, and since many of the copies are read by more than one person, the current efforts of the TIO are being widely communicated to a major portion of the nuclear power industry.

Other work included planning, executing, and documenting two TMI-2 seminars, the first in Washington, D.C. in November 1980 and the second in San Francisco in December 1981. Attendees to the San Francisco seminar completed a survey form evaluating the meeting, and those who responded had very positive comments. Seventy percent of the respondees characterized the information presented at the seminar as very useful. Eighty percent indicated that the seminar successfully directed itself to the nuclear industry and should retain that emphasis in future seminars. Ninety-eight percent of the respondees stated that they would be interested in attending future TMI-2 seminars.

Table 17. TI&EP GEND publications to December 31, 1981

GEND Number	Report Title
GEND 002	Facility Decontamination Technology Workshop
GEND 003	TI&EP Technical Integration Office Annual Report
GEND 004	Interim Status Report of the TMI Personnel Dosimetry Project
GEND 005	Characterization of TMI Unit 2 RB Atmosphere Prior to the Purge
GEND 007	Three Mile Island Unit 2 Core Status Summary: A Basis for Tool Development for Reactor Disassembly and Defueling
GEND 008	The Citizens Radiation Monitoring Program for the TMI Area
GEND 009	Measurements of ^{129}I and Radioactive Particulate Concentrations in the TMI-2 Containment Atmosphere During and After the Venting
GEND 010 Vol. I	In-Vessel Inspection Before Head Removal: TMI II Phase I (Conceptual Development)
GEND 010 Vol. II	In-Vessel Inspection Before Head Removal: TMI II Phase II (Tooling & Systems Design)

Table 17. (continued)

GEND Number	Report Title
GEND 011	Canister Design Considerations for Packaging of Three Mile Island Unit 2 Damaged Fuel and Debris
GEND 013	TMI-2 Reactor Building Purge—Kr-85 Venting
GEND 014	Examination Results of the Three Mile Island Radiation Detector HP-R-211
GEND 016	Accountability Study for TMI-2 Fuel
GEND 017	Response of the SPND Measurement System to Temperature During the Three Mile Island Unit 2 Accident
GEND 018	Nondestructive Techniques for Assaying Fuel Debris in Piping at Three Mile Island Unit 2
GEND INF-001	Quick Look Report Entry 1 Three Mile Island Unit 2
GEND INF-002	Quick Look Report Entry 2 Three Mile Island Unit 2
GEND INF-003	Quick Look Report Entry 3 Three Mile Island Unit 2
GEND INF-004	Quick Look Report Entry 4 Three Mile Island Unit 2
GEND INF-005	Quick Look Report Entry 5 Three Mile Island Unit 2
GEND INF-006	Quick Look Report Entry 6 Three Mile Island Unit 2
GEND INF-007	Quick Look Report Entry 7 Three Mile Island Unit 2
GEND INF-008	Quick Look Report on HP-RT-0211 Multivalued Behavior
GEND INF 10	HP-RT-211 Cable Analysis
GEND INF 011	First Results on TMI-2 Sump Sample Analysis—Entry 10
GEND INF 015	Preliminary Characterization of EPICOR II Prefilter 16 Liner
GEND INF 017	Field Measurements and Interpretations of TMI-2 Instrumentation:
Vol. I	CF-1-PT3
Vol. II	CF-1-PT4

WASTE IMMOBILIZATION AND REACTOR EVALUATION PROGRAMS

WASTE IMMOBILIZATION

The Waste Immobilization Program (WIP) focuses on identifying and planning accident-generated-radioactive-waste management activities to benefit the commercial nuclear industry. The program objective is to develop postaccident technology for radioactive waste processing, storage, transportation, and disposal.

Scope

In 1981, several short-term projects were implemented based on program planning completed in 1980. Those projects include: high integrity container development; ion exchange technology development; accident radioactive waste volume reduction techniques studies; and abnormal waste disposition.

The major long-term projects include both zeolite and resin disposition technology. Both projects are concerned with ion exchange media waste shipping, storage, research and development work, and final disposition. The zeolite project concentrates on problems peculiar to inorganic ion exchange media zeolites, while the resin project deals with predominantly organic ion exchange media resins.

Implementing these projects involved specialists and facilities from both national research laboratories and the private sector. The WIP aims to integrate lessons learned from TMI-2 accident radioactive waste management into ongoing programs wherever possible and to provide technical support to GPU during the TMI-2 recovery.

Accomplishments

Carefully developed system designs and successful prototype demonstrations characterize the progress made in the WIP projects during the reporting period. The significant accomplishments include design of a new radioactive waste disposal container, continued research and development activities in waste disposition methods, and successful completion of demonstrations tests of a new technology for waste immobilization.

High Integrity Container Development. The TI&EP initiated a program to identify alternative means to dispose of resin bed wastes from the cleanup of TMI-2 accident generated waste water. A number of disposal options were considered and the High Integrity Container (HIC) was selected as the disposal option for the EPICOR II liners. This choice was made for a number of reasons.

First, the HIC is cost-effective when compared to other disposal options such as waste solidifiers. The HIC development and production costs are moderate relative to those associated with waste solidification processing systems. Second, the HIC can be loaded and handled with as-low-as-is-reasonably-achievable (ALARA) personnel exposure, with minimal contents agitation, and without removal of liner contents. Third, the HIC is extremely effective for immobilizing waste, since it forms a very definite migration boundary. The container also provides significant intrusion protection until after the activity has decayed to a safe level.

Criteria for designing such a container evolved from basic disposition requirements. The HIC must isolate and immobilize the radioactive waste (primarily ^{137}Cs and ^{90}Sr with half-lives of 30 years) until the activity decays to a nonhazardous level. The HIC must also be suitable for use at any existing U.S. burial ground. Figure 36 provides an artist's conception of the application of the HIC burial system.

The basic disposition requirements were incorporated into the following specific design requirements:

- Must retain liquids and solids for a container life of 300 years
- Must provide controlled venting of gas
- Must withstand lithostatic loads at 90-ft burial plus superimposed 40-psi hydrostatic load and stacking loads to six containers high
- Must be capable of survival under severe internal and external corrosive conditions.

The development contractor, Nuclear Packaging, Inc., used several novel design features to satisfy the TI&EP design requirements. These

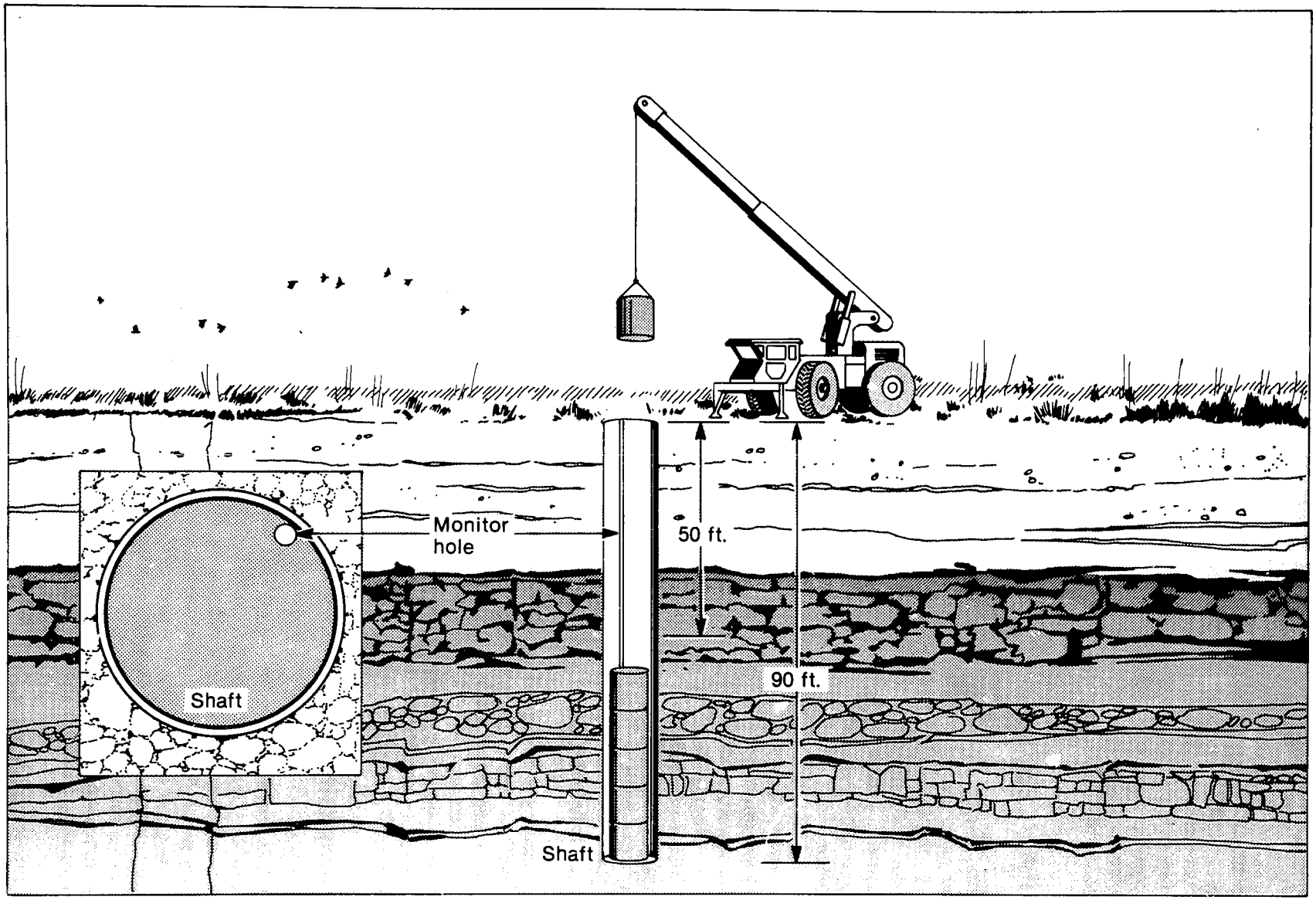

INEL 2 0384

Figure 36. High integrity container burial system.

features include multiple corrosion barriers, a passive vent system, and low-cost but effective construction materials.

The design recommends a reinforced concrete shell which surrounds a carbon steel liner, as shown in Figure 37. The shell provides protection during burial operations and also acts to protect against external corrosive elements that are present in the soil. An added precaution against external corrosion consists of coating the outer surface of the carbon steel liner and the reinforcing bar with the same nuclear-qualified coating used on the internal liner surface. Finally, a protective coating covers the external surface of the shell to further retard entrance of corrosive elements in the soil.

A concerted effort has been made to develop a passive vent system which will retain liquids at the hydrostatic pressure identified in the design specifications. The passive vent design developed consists of two trains of porous membranes with porous plugs as backups. Thus, each membrane senses only a portion of the total applied pressure. The membranes, made of polyethylene, are shielded by lead to reduce the radiation field down to an acceptable level. The system vent is shielded from all directions to ensure that membranes will be protected from external radiation sources as well.

The internal corrosion barrier consists of epoxy coatings bonded to a carbon steel liner. The coatings are qualified to 10^9 R in accordance with the ANSI N5.12 specification for radiation and chemical resistance. The coatings provide the corrosion barrier and the carbon steel liner provides a smooth and crack-free base for the barrier. Carbon steel is selected for the liner because of good bonding characteristics with the coating and low cost.

The HIC development and evaluation program is expected to be completed in 1982. The end product will consist of a tested design, an evaluation report, and the remains of the prototype hardware. The tests to be performed are as follows:

- Lifting system test to demonstrate capability to withstand a 3-g vertical load

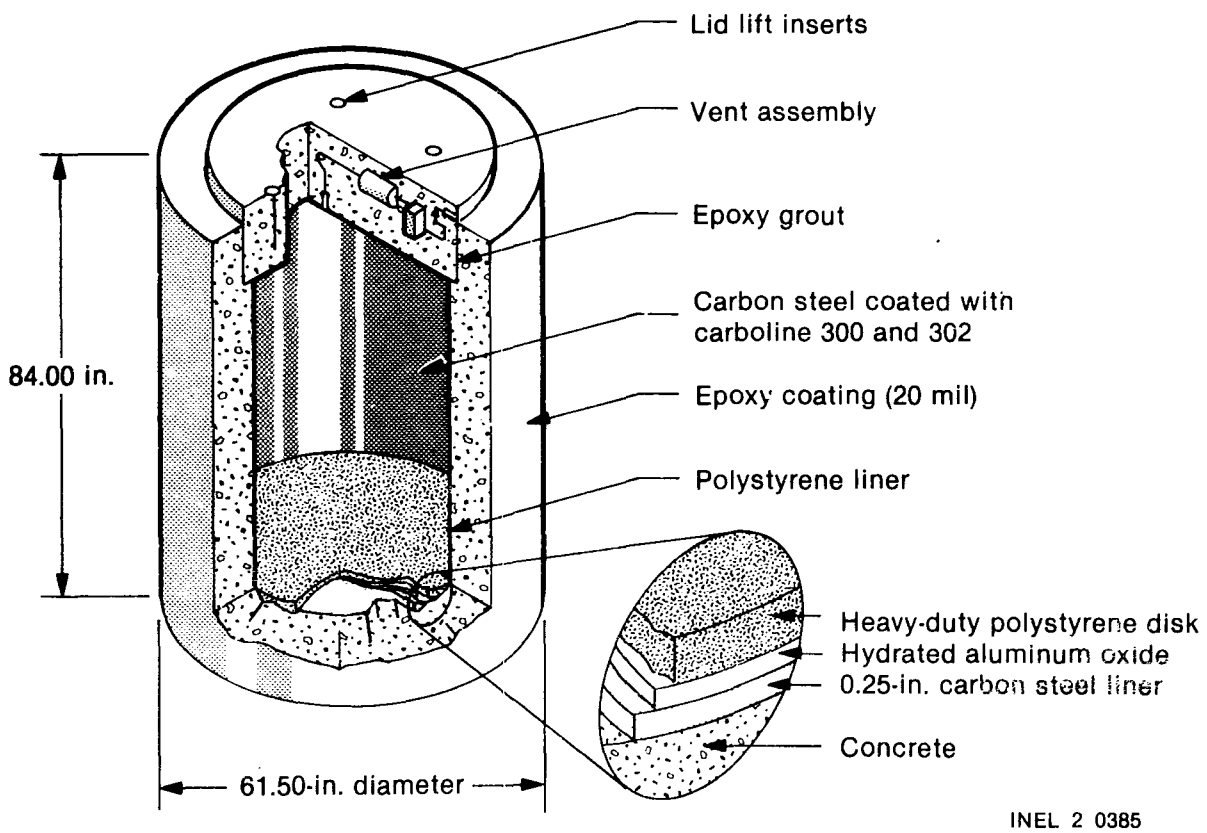

Figure 37. Cutaway view of the high-integrity container.

- Accelerated corrosion tests to demonstrate corrosion boundary capability of the structural materials

- Internal pressure test to demonstrate capability of sustaining 10 psig internal pressure

- Container boundary breach test to demonstrate that container will not be breached by a 3-ft drop

- Vibration test to demonstrate the capability of withstanding the effects of the transportation environment

- Vent system test to demonstrate vent rate and liquid retention capability.

Ion Exchange Technology. As a consequence of the March 1979 accident at TMI-2, about 600,000 gal of contaminated water accumulated in the reactor building basement. The design of the process GPU planned to use in the cleanup of this and other accident waste water was based upon work performed by GPU and at the Oak Ridge National Laboratory on samples of RCS water taken within a few weeks after the accident. The processing system, known as the Submerged Demineralizer System (SDS), was designed by a GPU contractor.

In the original SDS design, the contaminated water was to be clarified by filtration using a 75-μ prefilter and a 10-μ final filter. The clarified water would then be pumped through ion exchange columns containing zeolite and on through a column containing an organic cation exchange resin. Finally, the effluent water would pass through a polishing column containing layers of cation resin, anion resin, and mixed resin. Using this design flow sheet, ORNL conducted ion exchange column tests which showed that the decontamination factor for cesium would be 10^4 for at least 1000c/bed-volumes and 10^3 for strontium. Major decontamination was not expected to occur in the final polishing column of organic resins. The primary concern about the initial design was that the strontium concentrations in the effluent would be high.

In May 1981, a DOE-sponsored task force recommended that more efficient disposal of SDS zeolites could be realized if the zeolites were loaded to their full capacity during operations. The task force recommended increasing the loading on each liner from 10,000 to 60,000 Ci. In so doing, the number of canisters would be reduced from an estimated 75 to 12 canisters, and could save the recovery operation nearly $1,000,000. The reduced number of highly-loaded zeolite canisters will be used in current DOE R&D work and will thereby contribute to solving the problem of how to disposition the high-specific-activity waste.

The TI&EP directed research which identified a zeolite mixture capable of handling the increased curie load recommended by the task force. ORNL conducted scoping experiments for the TI&EP on mixtures of zeolites to improve strontium loadings in the first and second zeolite columns. In addition, the results of breakthrough experiments indicated that cesium's sorption rate is faster than that of strontium. Finally, ORNL used TMI-2 sump water samples provided by the TI&EP to conduct hot cell verification of the performance of the mixed zeolite system in a 1400-column test. All this TI&EP-directed work formed the basis for recommendations to employ a three-to-two Linde IE-96 to Linde A-51 zeolite mixture for SDS operation. A schematic of the SDS design flow sheet that was selected as a result of these and other experiments is shown in Figure 38.

The final SDS arrangement, currently in operation at TMI-2, employs two trains of four mixed zeolite beds. The system operating results confirm that the cesium and strontium are predominantly loaded on the first zeolite exchanger, which has reached a peak loading level of approximately 54,000 Ci.. TI&EP research efforts continue to look at alternate zeolites and mixes for greater strontium and cesium selectivity for primary coolant system processing in 1982.

Accident Radioactive Waste Volume Reduction Studies. The TI&EP directed preliminary engineering on a mobile Accident Response Evaporator. Mobility is a unique concept for the application of a normally stationary evaporator.

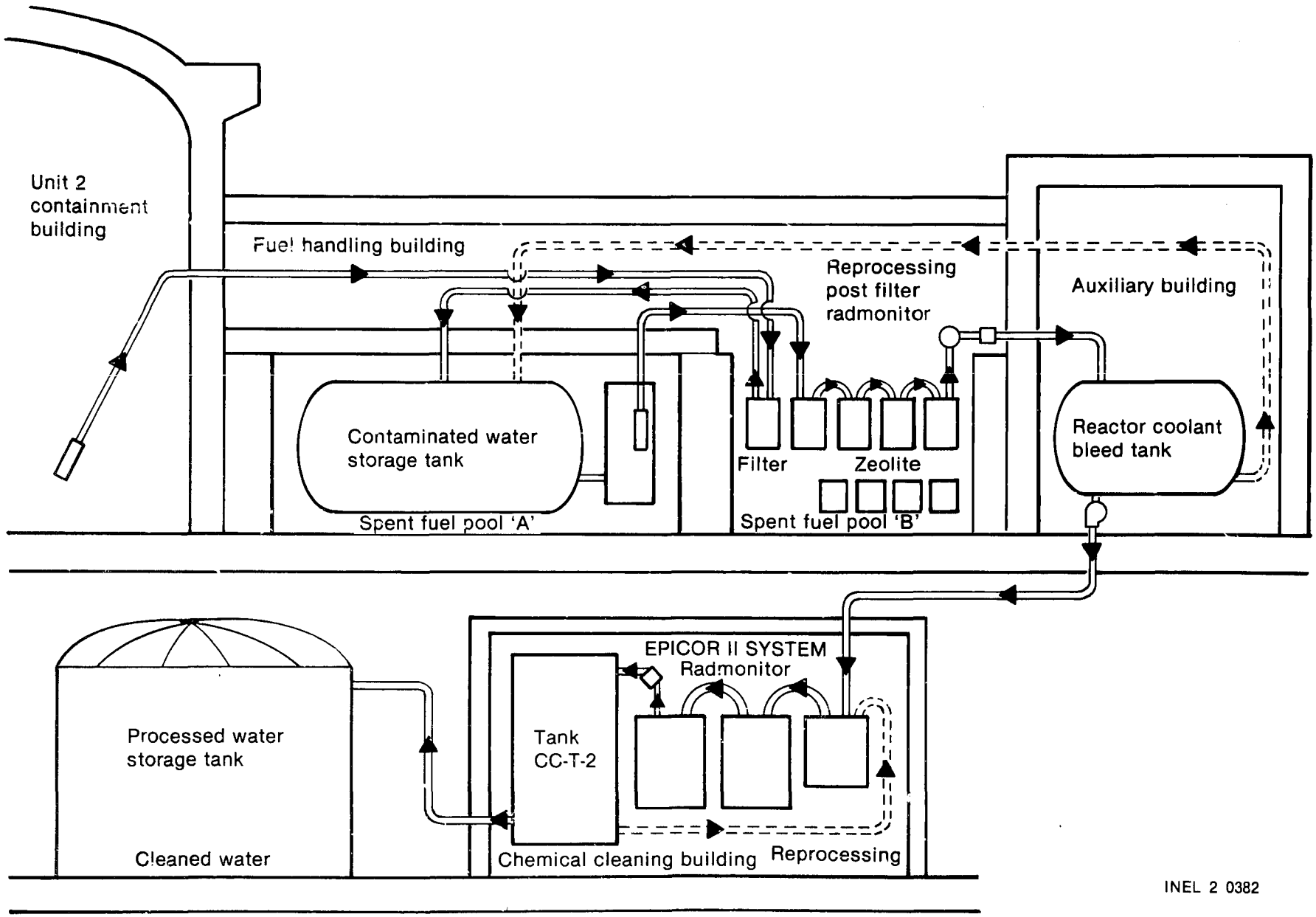

Figure 38. TMi-2 Submerged Demineralizer System.

In the suggested application, evaporator hardware could be readily deployed for volume-reduction of liquid radioactive waste streams generated during the decontamination of a nuclear facility after an abnormal event or accident. Some of the radioactive waste streams may contain solutions as contaminants unsuitable for cleanup by ion-exchange; therefore, evaporation is the most economical method. The preliminary design employs a 5-gpm climbing-film evaporator. This particular type of evaporator performs well even though high foaming solutions may be present in some of the radioactive decontamination solutions. The evaporator and its support systems would be mounted on a set of flatbed truck trailers. This design provides for a radioactive waste volume reduction system that is mobile, easy to operate, and relatively self-sufficient. This concept is being evaluated for inclusion in the radioactive waste processing systems at TMI.

Incineration represents another volume-reduction method TI&EP engineers considered for use at TMI-2. A conceptual design was developed for the possible commercial demonstration of a controlled air incinerator at TMI-2. The incinerator would be used to reduce the volume of combustible low specific activity (LSA) waste streams at TMI-2. Approximately 200,000 to 400,000 ft^3 of LSA waste is expected to be generated during the cleanup and decontamination of TMI-2.

An incinerator would provide for volume-reduction factors of 20-30 to 1 with solidification. This compares with 3-10 to 1 for the current industry practice of compaction. With these high volume-reduction factors, a most efficient use of the low-level waste disposal facilities can be made.

The design of this particular facility for TMI incorporates the use of a commercially available controlled air incinerator with a liquid off-gas scrubbing system. The TMI design adapts a basic system that was developed for the Department of Energy at the Los Alamos National Laboratory to commercial operation at TMI. Use of this concept for volume reduction will be at the discretion of GPU.

Zeolite and Resin Disposition Technology. On July 15, 1981, DOE and NRC signed a memorandum of understanding outlining, among other things, the terms under which DOE would accept such accident wastes as highly loaded SDS liners and EPICOR II prefilters from GPU for research and development (R&D) and disposition demonstrations at a DOE National laboratory. Ten to 20 SDS liners loaded with up to 60,000 Ci of cesium and strontium will be shipped to Richland, Washington for an R&D disposition demonstration. Up to 50 EPICOR II prefilters will be shipped to the Idaho National Engineering Laboratory for a high-integrity container demonstration program. Shipments could begin during the second quarter of 1982, or as soon as arrangements to ensure safe and legal shipments are completed. In both cases, DOE will be responsible for shipping.

Both GPU's onsite characterization of the EPICOR II prefilter PF-16 and the TI&EP's characterization at Battelle Columbus Laboratories (BCL) identified significant quantities of combustible gases in PF-16. The INEL designed a prototype gas sampling device to demonstrate safe venting and capturing of gases for analysis from liners before shipment. Figure 39 pictures the overall prototype gas sampler system; Figure 40 is a closeup of the on-liner installation. The prototype gas sampler (PGS), when placed on top of an EPICOR liner, forms a seal around and then remotely removes one of the penetration plugs. The PGS captures all of the released gases and thus ensures controlled venting. The PGS is also able to obtain samples for analysis and to purge the liner with inert gas prior to shipping.

Zeolite Vitrification Demonstration. During 1981 the TI&EP instituted a demonstration program for the vitrification of inorganic zeolite material. Battelle Northwest is conducting this demonstration program for the TI&EP at the Pacific Northwest Laboratories (PNL) in Richland, Washington. The zeolite material is used in ion-exchange media in the TMI-2 Submerged Demineralizer System (SDS) to clean up radioactive water. Vitrification is a method for immobilizing the highly radioactive spent zeolites in a glass-like matrix. During the vitrification process, zeolites and special glass formers called frits are mixed and heated to approximately 1050°C to form a molten glass mixture. When the mixture cools it becomes a solid glass log in which the radioactive contaminants are trapped.

The major objectives of the TMI Zeolite Vitrification Demonstration Program are to:

- Establish the technical feasibility of vitrifying zeolites using an in-can melter

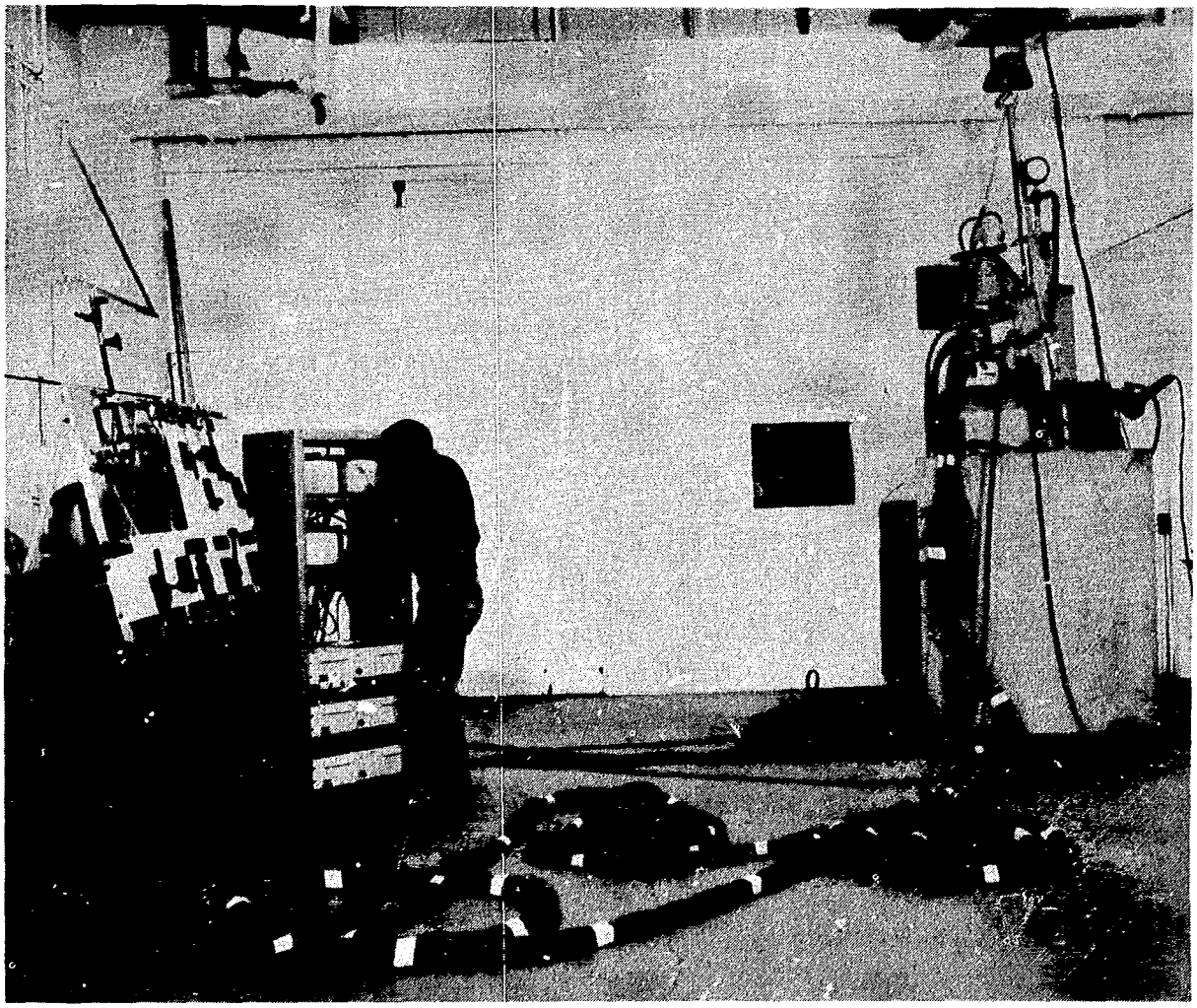

Figure 39. Prototype gas sampler system.

- Provide preliminary characterization of the waste form and compare it with other waste forms
- Provide a vitrified waste form for disposal demonstration.

To establish the technical feasibility of vitrification, laboratory-scale nonradioactive vitrification tests, or "melts," were performed and were followed by four full-scale nonradioactive melts. In 1982, three full-scale radioactive melts will be performed.

PNL conducted the laboratory-scale tests to identify a suitable glass formulation for properly immobilizing the zeolite. The objective of those tests was to identify a durable glass formulation that would contain the maximum amount of zeolites and still result in a high-quality final product. It was also desirable to find a composition that did not require such costly pretreatment of the zeolite as crushing or grinding. The tests were conducted with zeolites loaded with nonradioactive cesium and strontium. The glass products were subjected to visual examinations and leaching tests. Fluctuations in the cesium and strontium loading on the zeolite did not affect the vitrification process. However, the process was sensitive to the amount of zeolite in the feed mixture, apparently because the zeolite contains many of the basic constituents that are needed to make glass (primarily SiO_2).

The laboratory-scale experiment investigated several different compositions and amounts of glass additions, along with different zeolite waste loadings. The feed mixture which provided the best product consisted of the materials shown in Table 18.

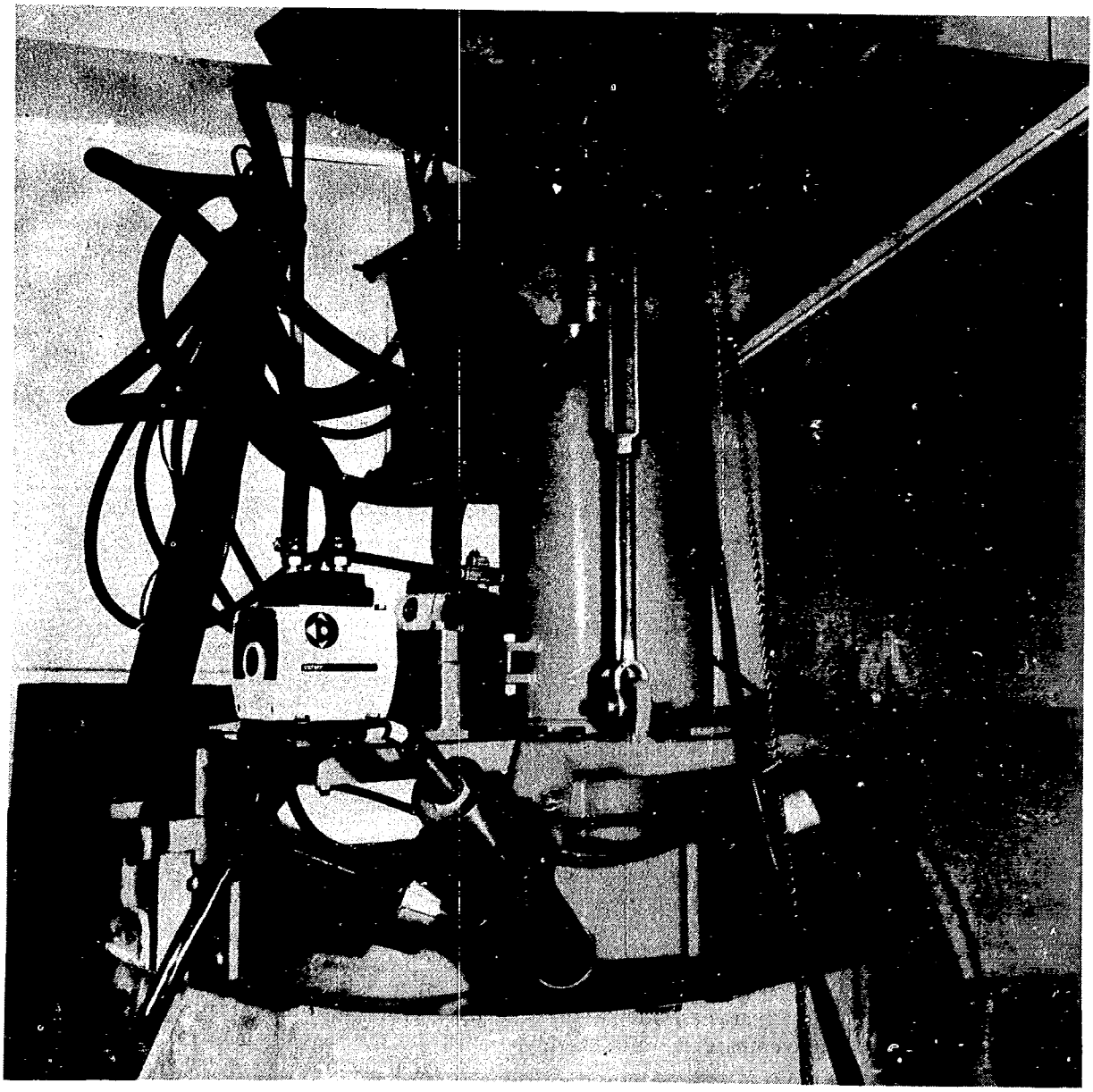

Figure 40. Prototype gas sampler on-liner installation.

Table 18. Makeup of feed mixture for zeolite

Material	Weight (%)
B_2O_3	5
Li_2O	5
Na_2O	8
TiO_2	7
Zeolite (Linde Ionsiv IE 95)	75

The information learned in the laboratory-scale testing was then applied to full-scale tests. PNL performed four nonradioactive full-scale demonstrations in 1981.

The zeolite vitrification equipment used for the demonstrations is shown in Figure 41. The product produced during each of the melts was a glass log, 8 in. in diameter by 7 ft tall, encased in a stainless steel cylindrical canister as shown in Figure 42. A 440-lb mixture of zeolite and glass formers melted in each demonstration to produce

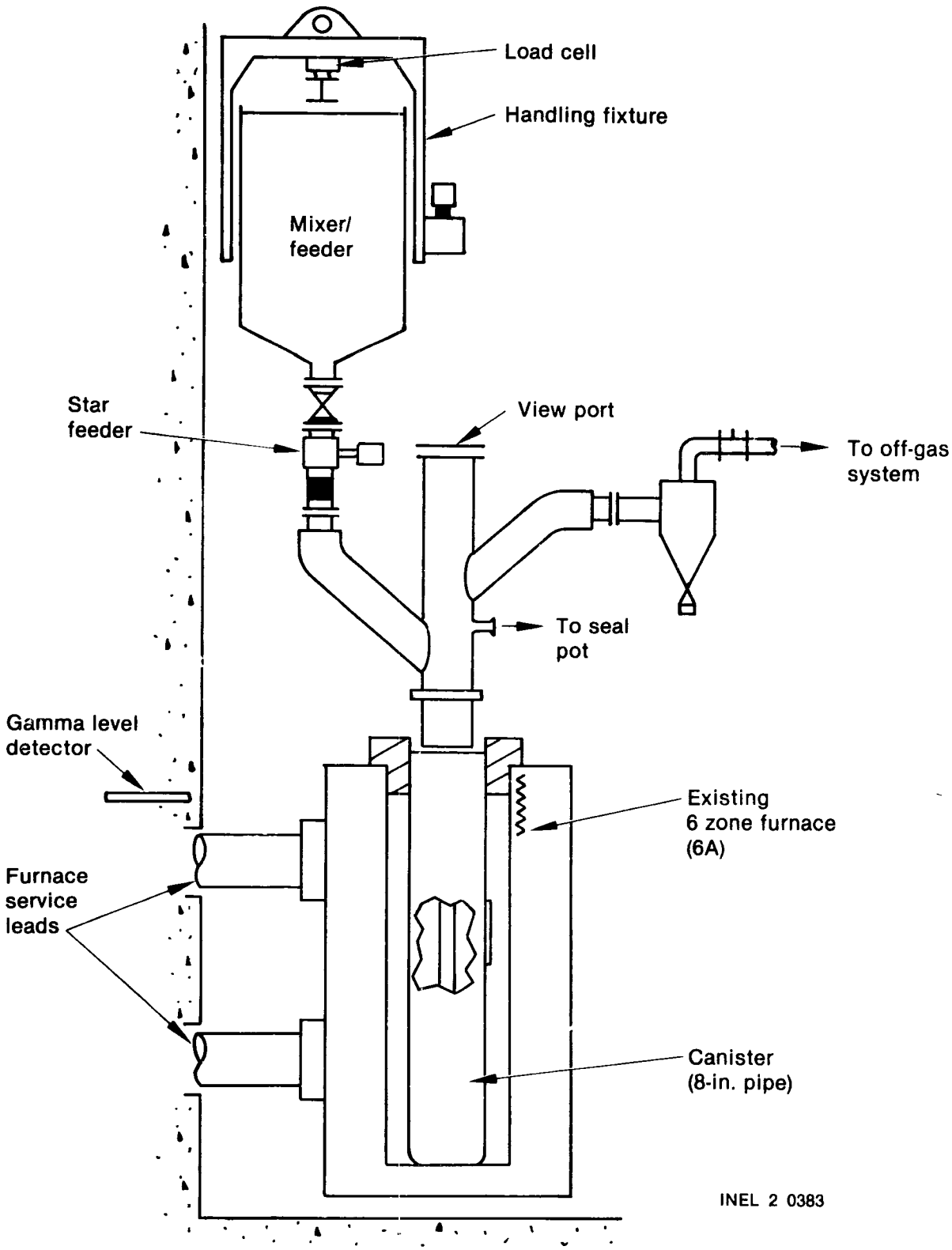

Figure 41. Zeolite vitrification system.

Figure 42. Vitrified waste canister.

about 365 lbs of glass. The difference in weight is primarily due to the carbon dioxide and water loss during the melting process.

During the full-scale nonradioactive demonstration, varying compositions of zeolite were used in the input waste material. The zeolites were loaded with nonradioactive isotopes of cesium and strontium to the equivalent of a total curie loading of 60,000 to 110,000 Ci per liner. PNL varied other process parameters to improve the characteristics of the final product. Visual checks and leach tests were performed to check on product quality. A summary of the major process and test data available to date from the nonradioactive demonstration runs are shown in Table 19.

During the next year and a half, PNL will conduct three radioactive full-scale demonstration runs. The DOE will ship two spent SDS liners from the TMI-2 SDS cleanup system to PNL. Each liner will contain about 8 ft^3 of zeolites. The resulting product from vitrification of the two liners will be three glass canisters, each containing about 2.5 ft^3 of glass. Glass samples from the liners will then undergo extensive testing and characterization.

Organic Vitrification. In conjunction with the vitrification of inorganic zeolites, PNL conducted a laboratory-scale feasibility test program for volume reduction and immobilization of organic resins. PNL scientists experimented with a combination incineration and vitrification process for organic EPICOR resins in a glass matrix. (The EPICOR resins removed radioactivity, mainly cesium and strontium, from the contaminated water in the Auxiliary Building at TMI-2.) Figure 43 shows the laboratory-scale organic vitrification system. The experimentation with a laboratory-scale in-can melter demonstrated that the EPICOR resins can be successfully incinerated and that the small amount of radioactive ash produced can be immobilized in a glass matrix.

Process tests conducted with 1.2 kg of EPICOR resins loaded with nonradioactive cesium and strontium showed excellent operational characteristics. Less than 0.8 wt% of the resins were entrained with the gaseous effluents. Cesium and strontium losses were controlled to 0.71 wt% and less. In addition, all the carbonaceous resins were converted completely to carbon dioxide with no carbon monoxide detectable.

Table 19. Full scale nonradioactive zeolite demonstration test results

	Run 1	Run 2	Run 3	Run 4
Zeolite composition	Linde IE 96	Mix of Linde IE 96/A 51	Mix of Linde IE 96/A 51	Mix of Linde IE 96/A 51
Zeolite mix ratio	N/A	2:1	3:2	3:2
Feed rate (lb/h)	55	7 to 55	7 to 44	7 to 44
% of final product that was zeolite	70	60	60	60
Product soak time (at 1050°C)	1 h	1 h	4 h	6 h
Canister height (ft)	8	9	9	9
Size of glass log				
Diameter (in.)	8	8	8	8
Length (ft)	7	7	7	7
Appearance	Some unmelted zeolite visible	Clear	Clear	Clear
Leach test (g/cm^2 per day)	5×10^{-5}	4×10^{-5}	4×10^{-5}	4×10^{-5}

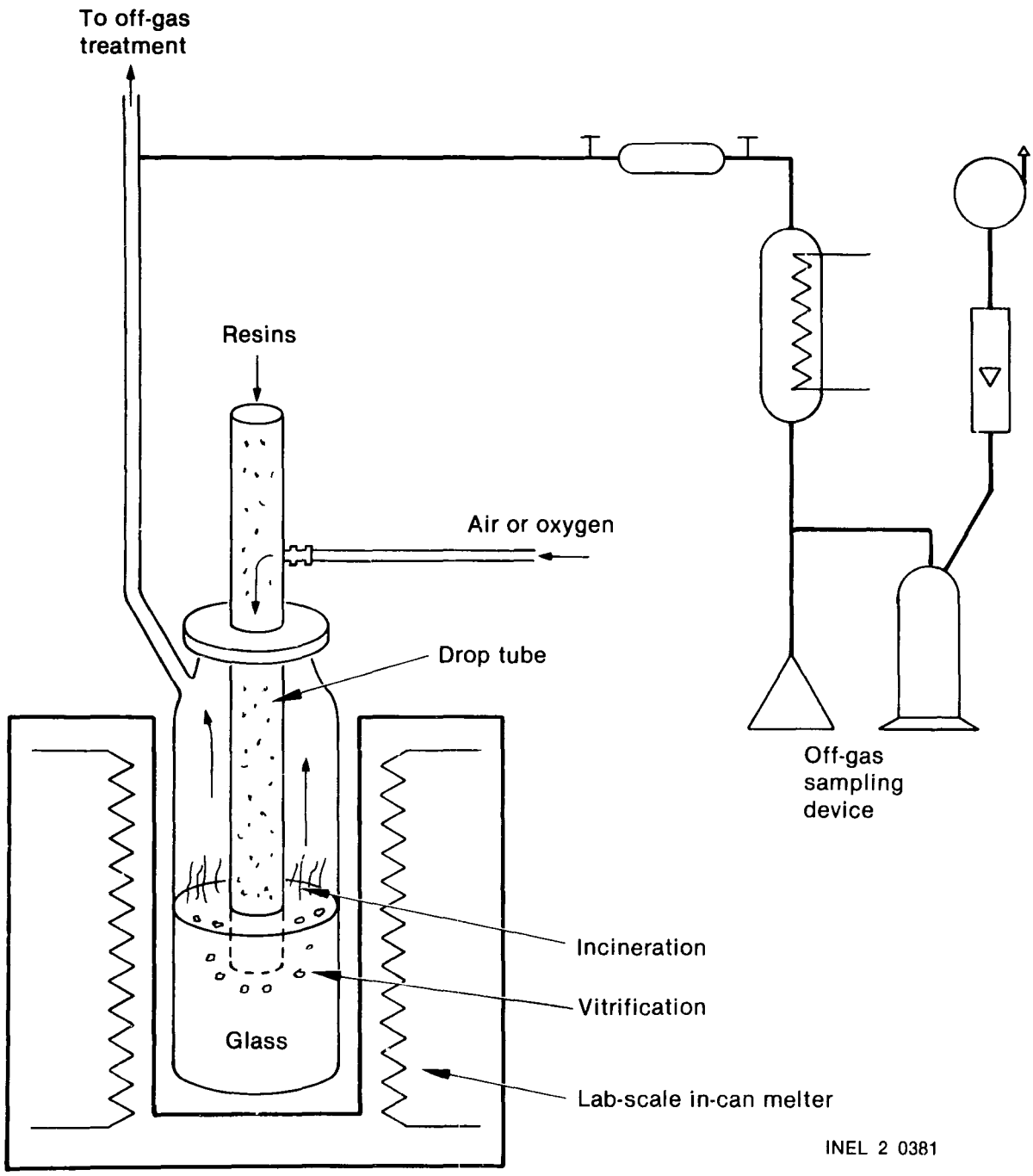

Figure 43. Laboratory-scale organic vitrification system.

REACTOR EVALUATION

During 1980, engineers in the Core Examination task investigated a number of procedures to evaluate the TMI-2 core damage and contribute to technology development for handling damaged cores. In 1981, significant effort was dedicated to expanding DOE's R&D evaluation of the TMI-2, core then being conducted under the Core Examination task. That task has been restructured into the Reactor Evaluation Program. The objectives of the Reactor Evaluation Program are to acquire data on the TMI-2 core and reactor internals, develop technology for postaccident reactor disassembly and defueling, and remove the core for off-site examination. Data on the reactor core and internals are needed to develop and assess accident prediction codes, provide a basis for rulemaking evaluations, and aid in evaluation of reactor design and operational safety.

Techniques and equipment developed under this program will provide basic technology for recovery of a damaged reactor core.

Scope

The Reactor Evaluation Program is divided into four tasks which incorporate some aspects of the former Core Examination Task. Other parts of that task have been incorporated into the Data Acquisition Program under Off-site Core Examination. The scope of each Reactor Evaluation task is outlined below.

The Pre-Head-Removal Core Damage Assessment task will obtain data on the condition of the TMI-2 reactor core required prior to removal of the reactor vessel head. Because these data will provide the first direct evidence of the actual core condition, they will serve as a bench mark for evaluating the various accident damage assessments. The data will also support future core damage research and tooling development by establishing conditions likely to be encountered after removal of the reactor vessel head. The core damage assessment task will also plan for the initial penetration of the reactor vessel pressure boundary.

The Reactor Evaluation System task identifies techniques and develops the equipment and procedures necessary to provide the data required by the In-Vessel Data Acquisition Plan. The Plan, under separate development by the Off-Site Core Examination task, will identify the data requirements specific to in-vessel conditions and materials and define the type, range, and level of accuracy of the information needed to fulfill these requirements. While specific data requirements and documentation needs have yet to be completely defined, the four general categories are: photo-visual inspection and documentation; selection, retrieval, and documentation of sample materials; development of in-vessel topographic and strategraphic information; and in situ geometric measurements. Initiation of this task is dependent upon completion of the In-Vessel Data Acquisition Plan during 1982.

The Reactor Disassembly and In Situ Data Acquisition task provides for safe removal, examination, and storage of the reactor vessel head, plenum, and fuel. This task consists of three major subtasks: reactor vessel head removal and examination; plenum and fuel removal; and R&D fuel and core removal, storage, and disposal.

The Mockup Facilities task will provide a mockup facility to support the program in the areas of equipment and procedure verification and in resolution of problems that may arise during reactor disassembly and defueling. The facilities will include a full-scale reactor mockup simulating dimensional and environmental constraints and specific mockups of reactor components. Early development of a scale model is also planned.

Accomplishments

Much of the work outlined for the Reactor Evaluation Program in its scope and objectives is contingent upon completion of work in other programs and upon progress in GPU's cleanup and recovery of TMI-2. This year's accomplishments, therefore, are primarily limited to significant conceptual designs, preliminary testing, and planning for tasks yet to be performed by Reactor Evaluation.

Pre-Head-Removal Core Damage Assessment. During 1981, a new technical evaluation group was formed for reactor damage assessment. The first target of this group will be to establish data goals for pre-head-removal core damage assessment based on input from various nuclear agencies and industry

participants. This will help confirm and expand the data goals acquisition already established for this program.

During the reporting period, techniques and equipment were developed to assess in-vessel conditions through the reactor vessel head. The equipment was designed, fabricated, and tested on mockups simulating the constraints existing in the TMI-2 plant. Following successful testing, the equipment was shipped to TMI-2; it will be used in actual TMI work during 1982. In-vessel inspection techniques tested in the mockups contributed to development of an overall approach to data acquisition in the actual reactor vessel. This approach is summarized in the following paragraphs.

Visual observations and debris sampling inside the vessel will provide early data on:

- The relative quantity and distribution of core debris in the plenum assembly
- Thermal distortion or other structural damage in the plenum region and closure head area of the vessel
- The condition of the core, particularly relative to debris bed formation
- The physical condition of those control rod (CR) couplings that cannot be uncoupled normally
- Possible damage to the weldments and binding of the plenum assembly
- Possible vessel key binding.

The Core Damage Assessment task includes development of contingency tooling to cut or otherwise remove control rod drive mechanisms (CRDM) and leadscrews to provide access in the event that normal CRDM unlatching procedures are not successful. The task also includes special operational support items. For example, systems and devices were developed to monitor water level under the head, to purge the air space under the head for contamination and exposure control, and to collect samples of the debris that is expected to be on the plenum structure.

The interior of the TMI-2 reactor vessel will be inspected with TV cameras lowered through one or more CRDM nozzles. At each of several access locations, the CRDM will be removed and replaced by a dummy tube of similar length with an inner diameter matching that of the CRDM nozzle, providing guidance for tooling support. At each selected access location, the camera will be lowered through the plenum directly to the top of the fuel assembly, assuming that the control rod guide assemblies in the plenum were not substantially snarled during the accident. In the event the fuel assembly upper end fitting is missing (perhaps having fallen into the core), the camera will be lowered further, permitting direct observation of the extent of core damage. At peripheral CRDM locations, the camera can be maneuvered to view the tops of peripheral fuel assemblies without the potential obstructions of control rod guide components in the plenum assembly. From experience gained in the mockup work, technicians know that, with proper manipulation of the camera and lighting, the camera can also observe:

- Adjacent CR guide assemblies (maximum of eight adjacent positions for each entry point)
- The top of the plenum assembly and cover
- Peripheral fuel assemblies and spaces between CR guide assemblies
- The area between the plenum cylinder and the core support cylinder at the upper core support plate.

TI&EP contractors developed a number of possible access routes for the inspection work. Figure 44 shows sketches of those routes.

While the ability to perform the through-head inspection is dependent on removal of one or more CRDMs, the removal of the reactor vessel (RV) head is dependent on uncoupling and parking or otherwise severing all CRDM leadscrews. This is because the design of the TMI-2 CRDMs does not permit the drive mechanisms to be removed independent of the leadscrews. In the event damage is such that the CRDMs cannot be removed using normal methods, contingency tooling and procedures were developed during 1981 to augment the uncoupling operation.

The contingency equipment permits removal of the first CRDM using a cutting operation performed just above the CRDM nozzle. Subsequent removal of a portion of the remaining leadscrew from the RV would be achieved by hydraulically applying a tensile

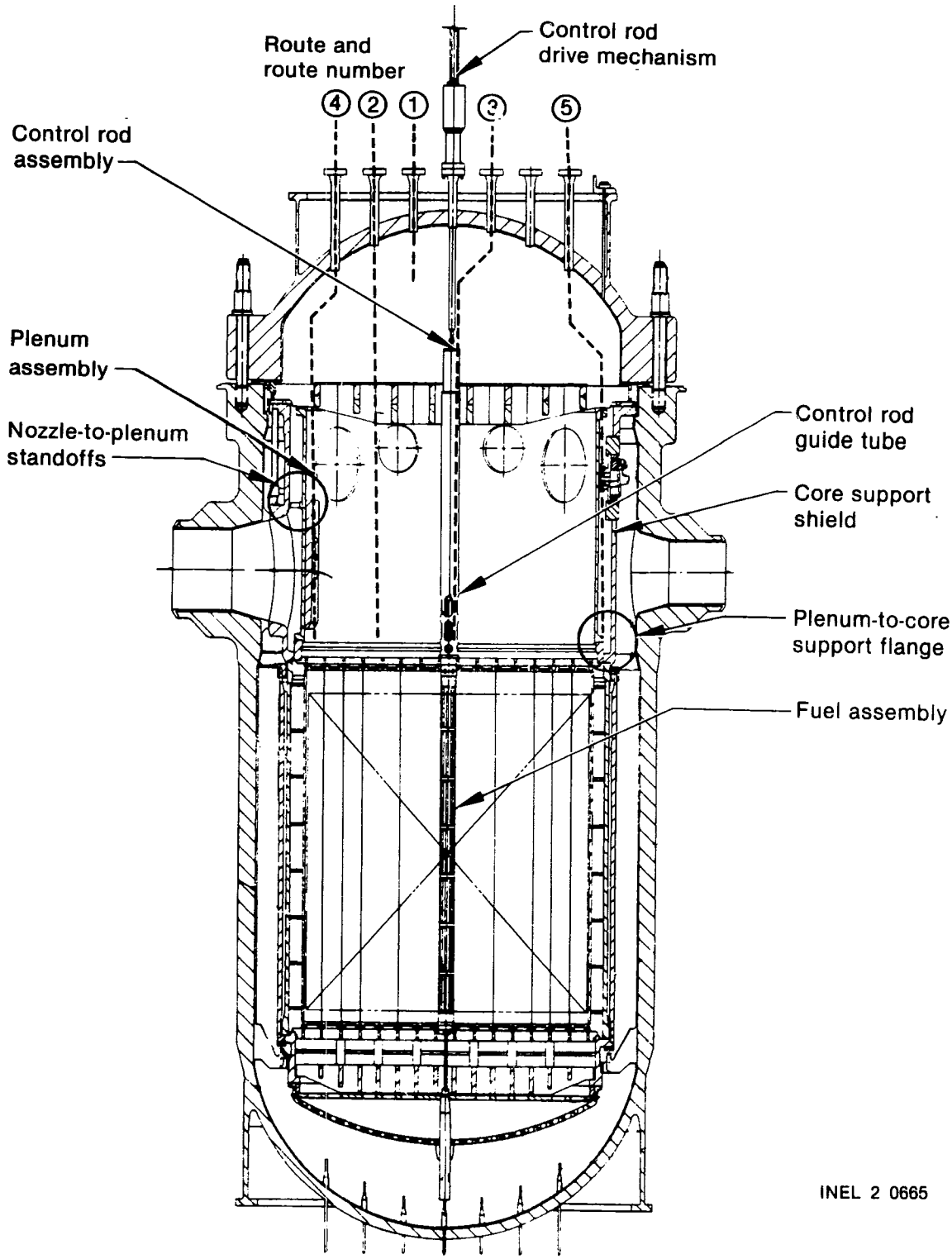

Figure 44. Pre-head-removal in-vessel inspection access routes.

force to the leadscrew until it separates at one of two sets of pins that hold the manufactured leadscrew segments together. Due to the potential for high radiation exposure during this operation, this contingency will be used only if no leadscrews can be unlatched and parked by normal means, and then only at one location.

The contingency equipment could also remove all remaining coupled or jammed CRDMs by severing their leadscrews under the RV head. Access for the remote cutting operation is through adjacent open CRDM nozzles. The operator performs this cutting operation remotely from the top of the CRDM service structure, a lower-exposure location. This contingency will be used in all control rod locations where uncoupling is unsuccessful.

The Pre-Head-Removal task also prepared safety systems to provide protection for in-vessel inspection personnel. In CRDM work, the reactor coolant system (RCS) water level must be lowered to prevent outflow from the open CRDM nozzles. A water level monitoring safety system with a local high-low alarm and a remote readout transmitter to the control room will ensure that the RCS water level remains within specified limits. The sensor device will be inserted through one of eight small-diameter thermocouple nozzles located in the periphery of the RV head. The second safety system continuously vacuum-purges the space under the head when CRDM nozzles are open. The purge system will use several thermocouple nozzles for access and will establish negative pressure and inward flow adequate to preclude back-streaming of gases or particulates. Installation and operation of the water level and purge safety systems will be coordinated with the actual inspection operations.

Core Damage Assessment Through the In-core Calibration Tubes and Instrument Strings—In the early stages of the TI&EP, the GEND planning groups considered the possibility of assessing core damage by probing the in-core calibration and instrument tubes with various devices and instruments. During the reporting period, this Core Damage Assessment task explored the feasibility of such an approach.

Fifty-two instrument strings are arranged in a spiral pattern in the core. Figure 45 shows an overview of instrumentation locations. These strings are withdrawn downward through the bottom head of the reactor during normal refueling and inserted to the top of the fuel assemblies prior to reactor operation. They are inserted through nozzles in the lower vessel head into instrument tubes in the center of each fuel assembly. There is a full-length calibration tube in the center of each instrument string. The calibration tubes have an inside diameter of 0.093 in. and the instrument strings are approximately 128 ft long. The instrument strings terminate at a seal table in the reactor building where the instrument connections are made. The seal table is at the 347-ft elevation, above the RV head but below the tops of the hot leg piping. Figure 46 shows the orientation of one in-core instrumentation string.

The GEND 001 *GEND Planning Report*, published in 1980, suggested that early core access could be gained through these lower head penetrations. However, further evaluation during this reporting period showed the prospect to be unfavorable. A key concern is that the lower head penetrations present the only potential path for direct leakage from the reactor vessel, making any disturbance undesirable. Access to the vessel through these penetrations is much more limited than that gained through the CRDM nozzles, and the reactor coolant system must be partially drained in either case. The instrument nozzle access to the reactor vessel offers no advantage in time or data potential to the CRDM nozzle route while presenting a small, but real, risk and much higher radiation exposures. The TI&EP decided to abandon this method in favor of pursuing early access through the CRDM nozzles.

Important data were obtained, however, from evaluation of the mechanical behavior of a movable in-core neutron detector when movement was attempted shortly after the accident. The neutron detector, positioned radially at about the midplane of the core, was in a withdrawn position below the core during the accident. Several days after the accident, an attempt was made to insert the probe into the core. The attempt was unsuccessful. The probe jammed in its guide tube after only a small amount of movement. An evaluation of the problem conducted during the reporting period concluded that the probe was probably jammed by fine debris inside the guide tube. This debris could have lodged there during the accident.

Reactor Evaluation System. Work began during 1981 on the evaluation of core mapping techniques for application following removal of the plenum assembly. Two candidate techniques were identified late in the year. A successful proof-of-principle test was conducted on the first candidate technique, known as a phase-shift range finder. The technique is an adaptation of commercially-applied

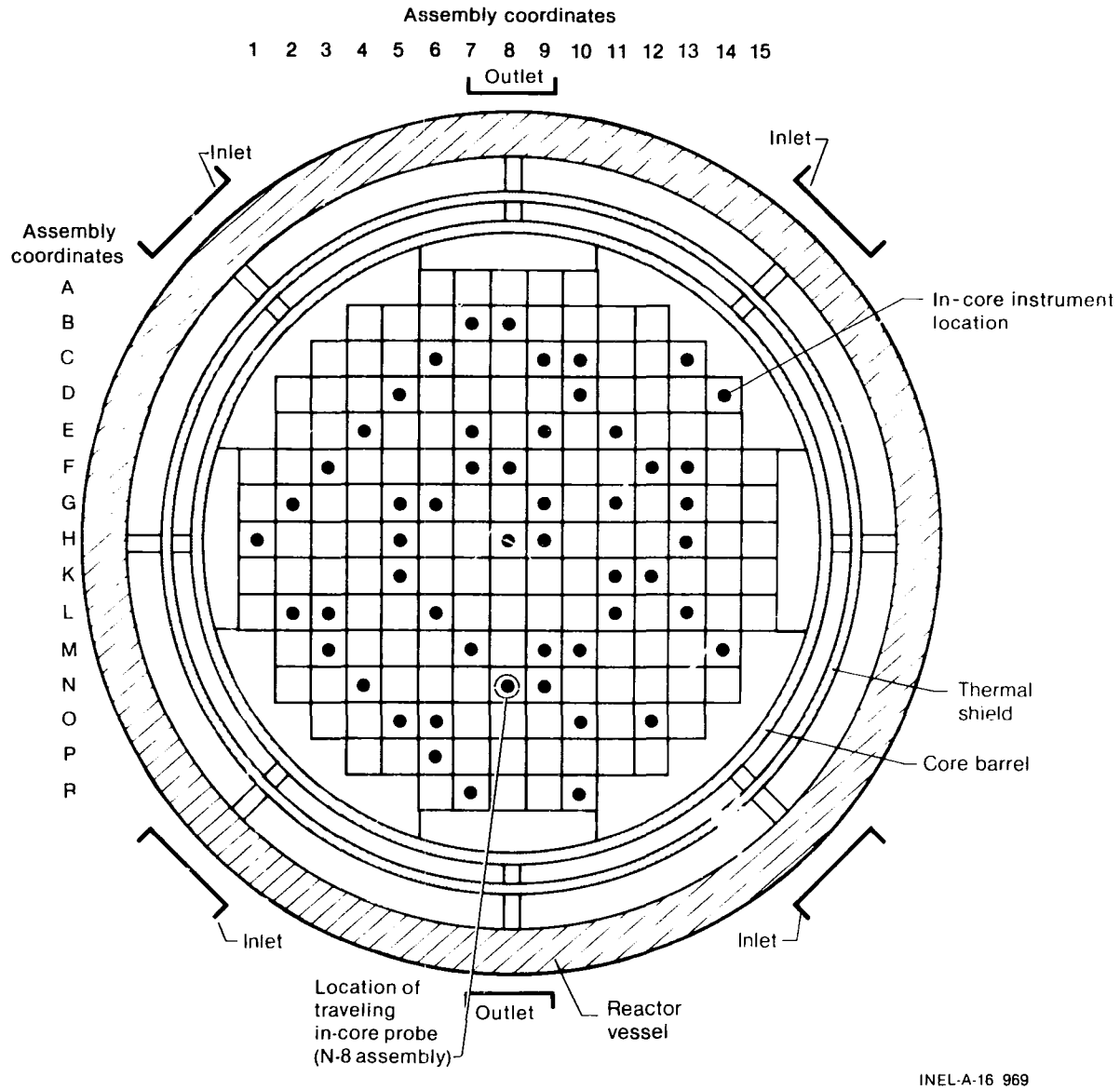

Figure 45. In-core instrumentation locations.

principles currently used in precision surveying. The second candidate is an adaptation of an ultrasonic technique developed for application in liquid-metal-cooled reactors. Investigation of both techniques will continue in 1982. Ultimate selection of a technique to be used will be determined by its adaptability to TMI-2 conditions, the speed of data acquisition, the accuracy of the information, and the ease of installation and operation.

Reactor Disassembly and In Situ Data Acquisition. Planning required for development of equipment to be used in data acquisition and core disassembly is based on theoretical and hands-on research and development conducted during the reporting period.

TMI-2 Core Status Summary—A report entitled *Three Mile Island Unit-2 Core Status Summary: A Basis for Tool Development for Reactor Disassembly and Defueling*, GEND-007, was completed and published in May 1981. The document reviews and summarizes the many TMI-2 core damage assessments which have been made, estimates the minimum and maximum bounds of damage, and establishes a "reference" description for the current status of the core. The different degrees of damage present in the reference core are being considered during development of techniques, priorities, and procedures for inspection, sample acquisition, and removal of the core. The following paragraphs and Table 20 summarize the estimates of TMI-2 core damage.

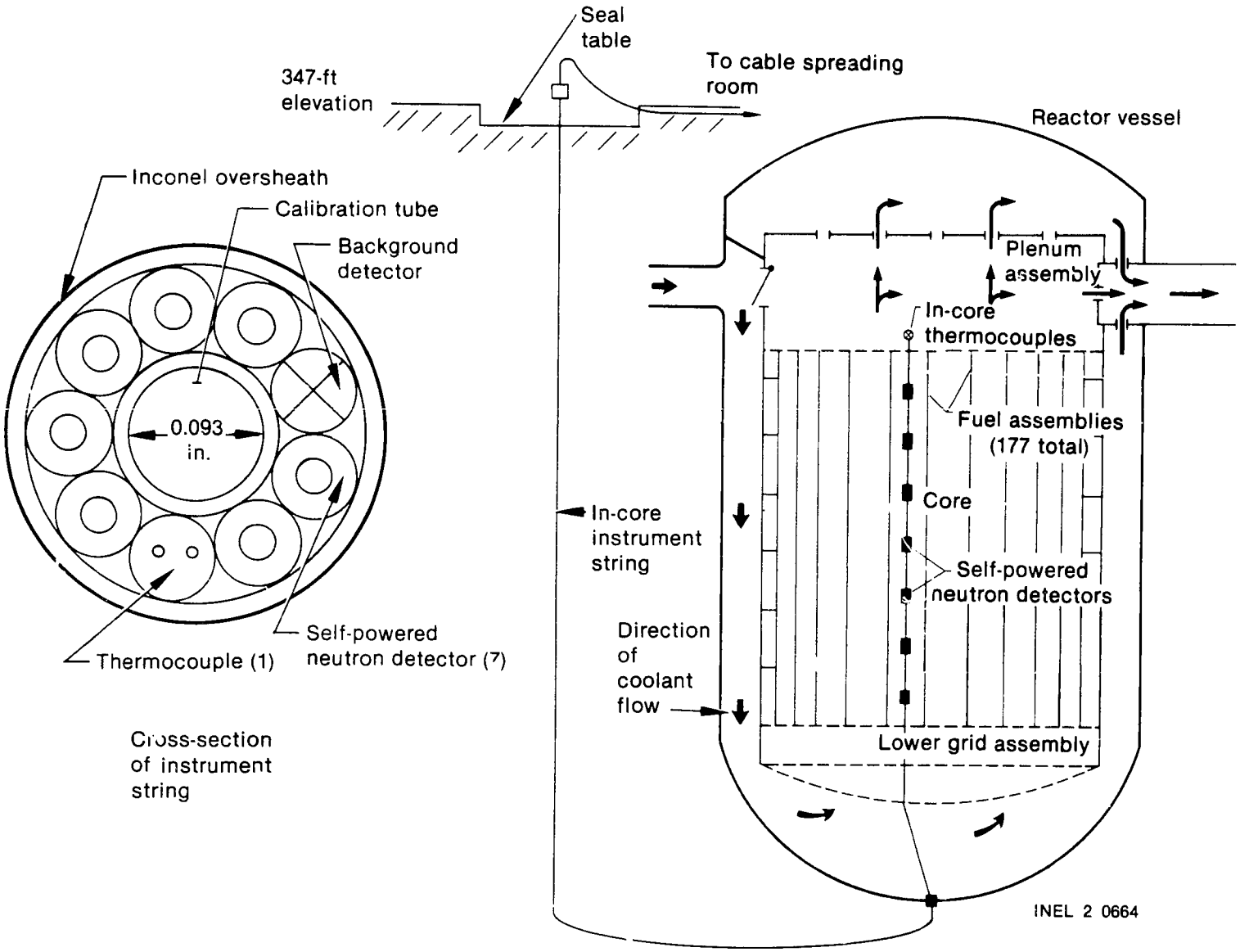

Figure 46. In-core instrumentation string orientation.

Table 20. Summary of minimum, maximum, and reference point core damage estimates

	Minimum	Reference	Maximum
Failed rods (%)	90	100	100
Fuel temperature (°F)	3140	Peak 4220	Peak 4400
Fuel cladding oxidized (%)	40	50	60
Liquified fuel	Locally possible	Present in central core areas	Over most of core down to about 1 m above core bottom
Molten fuel	None	None	Possible in localized areas
Core slumping	Probable	Definate	Definate
Fuel rod fragmentation and debris bed formation	Yes	Yes	Yes
Peripheral rods	Some intact and some embrittled	Embrittled near the top of the core	All embrittled, many with liquified fuel
Control rods and spacer grids	Some melting	Melted	Melted
Instrument tubes	Most intact	Most in central region failed	All failed
Embrittlement level (m above bottom of core at centerline)	1.8	1.4	0.9
Upper plenum assemblies	No distortion or melting possible	Some distortion and local melting	Central lower region melting; major slumping possible

The TMI-2 accident caused extensive damage to the core. A variety of analyses were performed using three general approaches to determine the extent of core damage. The first approach employed thermal-hydraulic principles and computer analyses. The second depended on determinations of the hydrogen generated, which indicates the amount of vessel wall zircaloy which oxidized and embrittled. In the third approach, the type and quantity of fission products released during the accident were used to estimate the location of core damage and the fuel temperatures which were reached. Uncertainties exist in each type of determination due to the equivocal nature of the data.

From reconstruction of the thermal-hydraulic events, engineers concluded that the core remained covered up to 100 min into the accident and that most of the damage occurred during the period from 100 to 210 min when the core probably was

uncovered. The fuel reached peak temperatures varying between 3140 and 4400°F. An estimated 50% of the zircaloy in the active core region is estimated to have been oxidized.

Measured isotopic ratios of uranium and plutonium in the reactor building sump indicate that the central region of the core, and perhaps the whole core, was uniformly damaged. Temperature estimates based on fission products found in the coolant vary greatly, from gross core average temperatures below 3140°F to about 40% of the fuel greater than 4355°F. There is general agreement, however, that the fuel remained below the melting point of UO_2 because very little strontium, tellurium, and ruthenium were present.

Defueling Source Terms—The choice of methods for plenum and fuel removal and for canal water cleanup at TMI-2 will be strongly influenced by each method's ability to isolate or control soluble and particulate radioactive source terms generated within the reactor vessel during plenum and fuel removal operations. The methods chosen to control the radioactive sources must also consider the impact of water turbidity on these operations.

During 1981, a task was initiated to provide engineering estimates of the source term for soluble radionuclides, for suspended radioactive particulates, and for total suspended solids that will be generated during plenum and fuel removal operations at TMI-2. This task provides baseline engineering estimates of soluble and particulate radioactive source terms and the degree of water turbidity stemming from in-vessel operations. Methods for isolation or capture of the radioactive material and nonradioactive particulates are being postulated and evaluated for future use in assessing and selecting the general methodology and the specific tooling for removing the plenum and core remains from the TMI-2 reactor vessel.

Phase I of the task was successfully completed in 1981. The essential activities of Phase I were the review of existing literature and data and the definition of specific data acquisition activities at TMI-2 that will contribute to the refinement of radioactive source term and turbidity estimates during Phase II.

Borated Water Effects—During 1981, a study to determine if corrosion of the postaccident core materials caused by high boron content water might "mask" important core data was completed. The report, *The Potential Effects of Post-Accident Corrosion on the Evaluation of the TMI-2 Core and Reactor Internals*, GEND INF-14, will be published in 1982.

The report concludes that postaccident chemical reactions facilitated by high-boron content water are unlikely to have altered the postaccident core materials enough to be a factor in the planning and performance of core data acquisition and off-site fuel examination activities.

Development of Canisters for TMI-2 Fuel—Because a majority of the fuel at TMI-2 probably lacks cladding integrity, it must be packaged in sealed canisters. The canisters will also contain damaged fuel assemblies and debris removed by underwater vacuuming. The canister design is not only constrained by criticality, shipping, off site storage, and disposal or reprocessing requirements, but the design must also be coordinated with the choice of defueling and reactor building handling equipment. The canister design will directly influence the design of modifications to the existing mechanisms that transfer fuel from the refueling canal to the spent fuel pool or the design requirements for replacement mechanisms. Racks must be designed to accommodate the canisters.

During 1981, a study of canister design considerations was completed under TI&EP direction. The resulting report, *Canister Design Considerations for Packaging of TMI Unit 2 Damaged Fuel and Debris*, GEND 011, will support detailed design of the canisters scheduled to be performed later in the program. Figure 47, based on drawings in GEND 011, shows a suggested canister design.

Fines and Debris Vacuum Collection System—Evaluations of core condition indicate that as much as 50% of the TMI-2 core could have been subjected to brittle fragmentation. The debris thus generated, as much as 64 metric tons, would consist of UO_2 and ZrO_2 fragments ranging in size from a few centimeters down to micron-sized fines. Evaluations of data generated by various national laboratory post-test examinations of high-damage fuel experiments indicate that some of the fuel and oxidized cladding fines might be smaller than 40 μm.

During the reporting period, TI&EP-directed engineers developed a set of functional requirements and a conceptual design for a vacuuming system to address the need to efficiently handle fragmented core materials and to provide a basis for cost estimation. The system employs hydraulic suction to gather

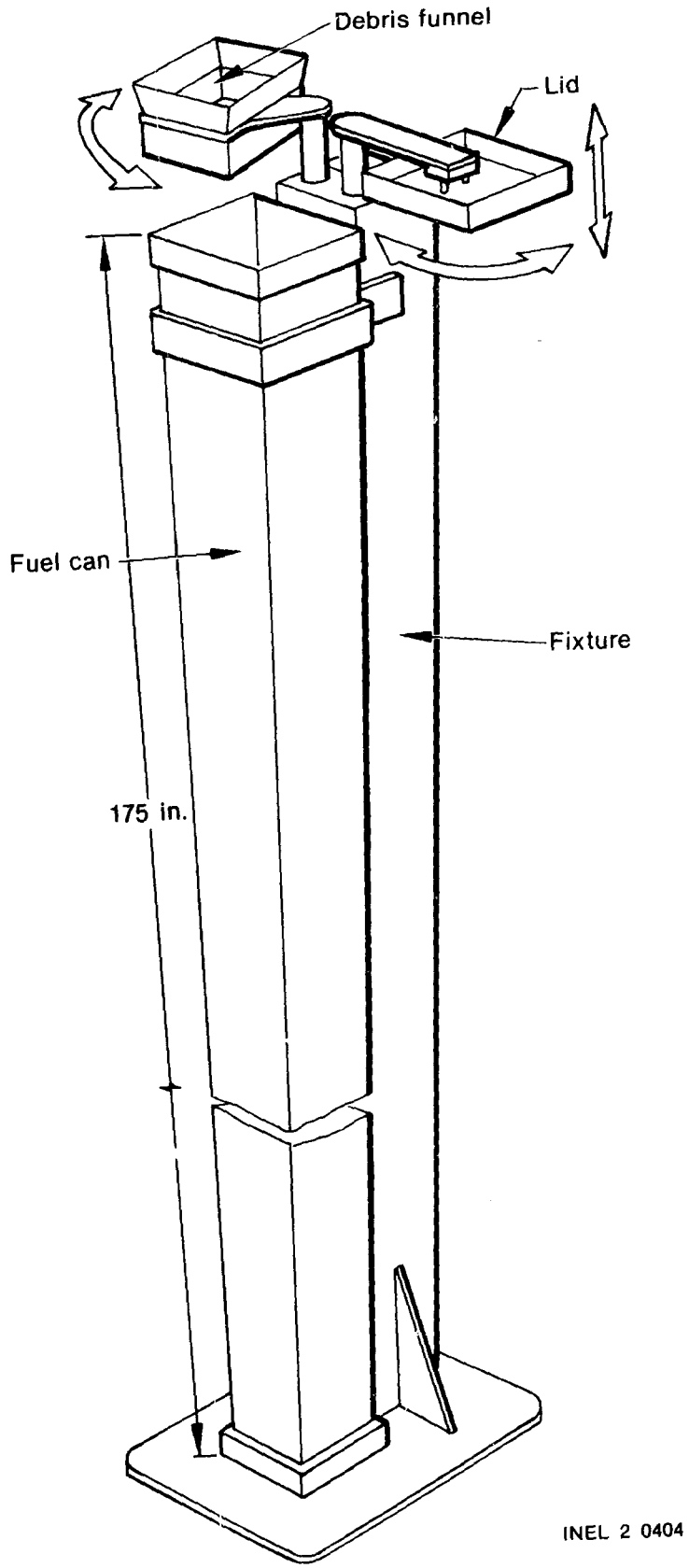

Figure 47. Single multiapplication canister for TMI-2 fuel and debris.

and lift the fragmented core material. Collection of the debris is accomplished using the standard defueling canisters. Provisions were made for a set of settling canisters to remove fragments >200 μm, for hydro-cyclone classifiers to concentrate the particulate in a low-flow stream, and for sets of canisters containing filters on the effluent streams to remove particulates. The effluent stream could then be routed back to the reactor vessel or on for additional cleanup to remove the remaining very fine particulates (general non-fuel-bearing "crud") and additional dissolved fission products leached from the fuel by the vacuuming system.

Contingency Plenum Removal—A number of methods for plenum removal were considered during the reporting period. The preferred method and the one to be attempted first is a controlled normal lift of the TMI-2 plenum. However, the method used to remove the upper plenum assembly at TMI-2 will be subject to a number of constraints. Mechanical binding at the plenum keyways and at the upper grid ring could prevent a normal intact lift of the plenum. It is possible that some fuel assembly upper end fittings will remain mechanically or metallurgically attached to the plenum.

Planning for plenum removal included the need for destructive removal methods among the contingency techniques and procedures identified to support the removal work. A preliminary destructive plenum removal sequence plan provides partial disassembly, full access to the upper grid assembly for inspection or end fitting removal, and the maximum access for subsequent destructive disassembly of the upper grid and plenum cylinder, if required. The proposed sequence, in a condensed form, is given below:

1. Cut the welded junction between the upper end of the control rod guide tube subassembly and the plenum cover plate.

2. With the guide tube-to-plenum cover welds cut, the plenum cover ribs provide the remaining connection between the plenum cover assembly and the balance of the plenum. Section the ribs in the space between the plenum cover plate and the plenum cylinder flange (i.e., inside the outer wall of the plenum).

   The first "hold point" in the sequence occurs at this time. Visual access is now provided for all 108 noncontrol fuel assemblies and, with some difficulty, the 69 control assemblies. Inspect for attached fuel assembly and fittings at this point.

3. The remaining step to clear the upper grid of plenum hardware is to cut the 69 guide tubes free from the point of attachment to the grid.

   A second "hold point" occurs at this time. The condition of the end-fitting-to-upper-grid junctions can be inspected across the core. Missing end fittings can be plotted and, assuming some fittings are missing, the underside of in-place end fittings can be examined to determine whether supporting fuel assembly hardware is still in place.

4. At this point, the remains of the plenum are rigged for lifting. Stuck end fittings should be restrained from falling, and then an attempt made to drive them down. If successful, the freed end fittings can be lowered into the core region.

5. At the noted positions for jammed or welded end fittings, operations can be undertaken to free the fittings since complete grid access is available.

6. If the keyways are bound, the binding stresses may have to be relieved before the plenum or the plenum shell can be lifted. By machining a hole in the flange behind the keyway pinch-points, the stresses can be expended in distorting the shape of the hole. This should relieve the load between the key and the keyway, enough to allow the plenum to be lifted.

If the plenum shell cannot be lifted free of the reactor vessel due to excessive distortion and binding at the upper grid level, subsequent disassembly will be required. At this point, the plenum structure would be an empty shell and full access would be available to the remaining components.

Subsequent disassembly would proceed from the "bottom" (upper grid) toward the flange, cutting and removing large pieces in succession until the binding stress was relieved.

Fuel Accountability—One of the many unique situations posed by TMI-2 is defining an acceptable accountability plan. Material control and accountability procedures for nuclear reactors are

regulated by 10CFR70.51, Appendix 1, which provides for item accountability of the fuel entering and leaving the reactor. Because of the potential damage sustained by the TMI-2 core and the possible loss of identity of some fuel assemblies, it may not be possible to fully apply the requirements of 10CFR70.51 to complete recovery of the core.

Westinghouse Hanford Engineering Development Laboratory completed a study in 1981 entitled *Accountability Study for TMI-2 Fuel*, GEND 016. The study reviews various state-of-the-art techniques including weighing, passive nondestructive assay (NDA), active NDA, and chemical analysis. The study concludes that bulk measurement by weight should be used as the primary method of accountability, supplemented by assay techniques on specific samples.

This study may serve as a primary reference when GPU develops a specific accountability plan.

Mockup Facilities. During 1981, TI&EP contractors developed a conceptual design of a full-scale reactor mockup. The design will be used to complete functional requirements and a request-for-proposal package for development of the actual facility. This mockup, or a variation, will be constructed in the turbine building at TMI during 1982.

The concept includes a tank simulating dimensional constraints in the refueling canal and reactor vessel. This tank will be capable of flooding and will include the necessary water cleanup systems, lighting, etc. It will also contain simulated reactor components required for operational checkout during reactor disassembly.

CONCLUSION

CONCLUSION

The Technical Information and Examination Program has been operating since October 1980. Since that time, significant advances have been made in the cleanup of TMI-2. By March of 1982, almost all of the 600,000 gal of contaminated water in the reactor building basement will have been processed through the Submerged Demineralizer System using technology supported by the TI&EP. Large-scale decontamination experiments during the first quarter of 1982 will not only begin major cleanup of floor surfaces, but will also provide significant data for TI&EP research and development studies. Such waste immobilization techniques as storage in a high integrity container and vitrification of both resin and zeolite ion-exchange media will go a long way toward finding a solution to the problem of disposing TMI-2 abnormal wastes.

Just as significant have been the advances in technology of lasting benefit to the entire nuclear industry. Continuing development of mass balance and source term information will increase understanding of fission product transport and deposition during an accident. Improved personnel dosimeters with beta-detecting capabilities will increase the accuracy of personnel exposure measurements help protect plant workers against overexposure to accident environments and high beta radiation fields.

Careful examination of electrical safety systems has produced and will continue to yield information leading to improved design and fabrication standards for nuclear industry instrumentation and electrical components. Development of an efficient gas sampler for venting gases and purging with inert gases prior to shipment of ion-exchange media liners will ensure safer shipment of radioactive waste in the future. Waste immobilization and characterization research and development work will continue to enhance the industry's ability to handle abnormal nuclear wastes. Reactor evaluation and removal technology will advance the state-of-the-art, damaged-core handling procedures while also effecting a major milestone in the TMI-2 cleanup and recovery.