GEND-044
Distribution Category: UC-78
TMI Supplement

DISCLAIMER

This report was prepared as an account of work sponsored by an agency of the United States Government. Neither the United States Government nor any agency thereof, nor any of their employees, makes any warranty, express or implied, or assumes any legal liability or responsibility for the accuracy, completeness, or usefulness of any information, apparatus, product, or process disclosed, or represents that its use would not infringe privately owned rights. Reference herein to any specific commercial product, process, or service by trade name, trademark, manufacturer, or otherwise does not necessarily constitute or imply its endorsement, recommendation, or favoring by the United States Government or any agency thereof. The views and opinions of authors expressed herein do not necessarily state or reflect those of the United States Government or any agency thereof.

GEND--044

DE85 017613

TMI-2 REACTOR VESSEL HEAD REMOVAL

Paul R. Bengel
Michael D. Smith
Gail A. Estabrook

Published September 1985

GPU Nuclear Corporation
Middletown, PA 17057

Prepared for the
U.S. Department of Energy
Three Mile Operations Office
Under DOE Contract No. DE-AC07-76IDO1570

DISTRIBUTION OF THIS DOCUMENT IS UNLIMITED

ABSTRACT

This report describes the safe removal and storage of the Three Mile Island Unit 2 (TMI-2) reactor vessel head. The head was removed in July 1984 to permit the removal of the plenum and the reactor core, which were damaged during the 1979 accident. From July 1982, plans and preparations were made using a standard head removal procedure modified by the necessary precautions and changes to account for conditions caused by the accident. After data acquisition, equipment and structure modifications, and training, the head was safely removed and stored; and the internals indexing fixture and a work platform were installed on top of the vessel. Dose rates during and after the operation were lower than expected; lessons were learned from the operation which will be applied to the continuing fuel removal operations activities.

ACKNOWLEDGMENTS

The authors express their appreciation for the contributions of Site Operations, Radiological Engineering, Technical Planning, and Recovery Operations of TMI-2 for the initial development of sections of this report, and to the entire TMI-2 recovery team for their timely and valuable reviews.

CONTENTS

ABSTRACT ii

ACKNOWLEDGMENTS iii

1. INTRODUCTION 1

2. BACKGROUND 4

2.1 Administrative Control 4

2.1.1 Overview of Organizations 4
2.1.2 Prerequisites 4

2.2 Training 5

2.2.1 CRDM and Service Structure Mockup 5
2.2.2 Plenum Cover/Head Interface Mockup 6
2.2.3 IIF and IIF Platform Mockup 6
2.2.4 Reactor Vessel Stud Detensioning Mockup 6
2.2.5 Auxiliary Fuel Handling Bridge Mockup 6
2.2.6 Training Summary 6

2.3 Pre-Head-Lift Data Acquisition 6

2.3.1 Quick Looks 1, 2, and 3 6
2.3.2 Underhead Data Acquisition 7
2.3.3 Axial Power Shaping Rod Insertion 10
2.3.4 Core Topography 10
2.3.5 Core Debris Grab Sample 10
2.3.6 Trial Parking of Lead Screws 10

3. GENERAL PREPARATIONS 11

3.1 Primary and Secondary Systems Water Preparations 11

3.1.1 Reactor Coolant System Level Indication 11
3.1.2 Primary and Secondary Systems Pressure Reductions 11
3.1.3 Primary and Secondary Systems Water Level Adjustments 11
3.1.4 Reactor Coolant System Chemistry 12

3.2 Equipment Removals 12

3.2.1 Reflective Insulation 12
3.2.2 Service Structure Fans 12
3.2.3 D-Ring Catwalk 12
3.2.4 Cooling Water Spool Pieces 12
3.2.5 Control Rod Drive Mechanism Cable Bridges 15
3.2.6 Auxiliary Fuel Handling Bridge 15

3.3 Refueling Canal Fill and Drain 15

3.3.1 Canal Seal Plate 16
3.3.2 Fuel Transfer Canal Fill and Drain Systems 16

3.4 Shim Drive Lead Screw Uncoupling, Verification, and Parking 19

3.5 Lifting and Rigging 20

3.5.1 Head Lift Tripod and Turnbuckles Inspections 20
3.5.2 Polar Crane Load Test 20
3.5.3 Jib Crane Refurbishment 20
3.5.4 Reactor Vessel Head Lift Pendants Installation 23

3.6 Reactor Vessel Studs 23

3.6.1 Cleaning 23
3.6.2 First Pass Stud Detensioning 23
3.6.3 Final Pass Detensioning and Removal 25

3.7 Contamination Control and Radiation Attenuation 26

3.7.1 Reactor Vessel Service Structure Shielding 26
3.7.2 Reactor Head Storage Stand Atmospheric Enclosure 26
3.7.3 Reactor Head Storage Stand Shielding 26
3.7.4 Plenum Misting System 29
3.7.5 Contamination Control Assembly 29
3.7.6 Shielded Work Area 29

3.8 Camera Installation/Lift Monitoring Video System 31

3.9 Internals Indexing Fixture Preparations 31

3.9.1 Modifications 31
3.9.2 Remote Handling 33
3.9.3 Platform, Processing, RCS Sampling, and Level Control 33

4. HEAD REMOVAL 34

4.1 Operation 34

4.2 IIF Installation 36

5. POST-OPERATION EVALUATION 43

5.1 Radiological Engineering 43

5.1.1 Head Removal Exposure Evaluation 43
5.1.2 Head Removal Radiation Level Evaluation 43
5.1.3 Radiation Level Changes During Head Removal, IIF Installation, and IIF Platform Installation 45

5.2 Lessons Learned 45

5.2.1 Equipment 45
5.2.2 Documentation 50
5.2.3 Personnel 51

6. REFERENCES 54

APPENDIX A—DESIGN ENGINEERING, REACTOR VESSEL HEAD REMOVAL ACTIVITIES A-1

TMI-2 REACTOR VESSEL HEAD REMOVAL

1. INTRODUCTION

In June 1982, a task force was formed to develop a plan for removing the Three Mile Island Unit Two (TMI-2) reactor vessel head. The plan proposed removing the head using a standard head removal procedure in conjunction with the necessary precautions, changes, and preparations required for potential problems.[1] This included the potential for both higher than normal radiation levels and airborne radioactive contamination. In addition, the plan specified that the plant be left either in a condition to proceed with plenum and fuel removal immediately after head removal or in a safe long term layup condition.

The basic plan consisted of the following major steps:

1. Perform underhead visual inspections and obtain radiation measurements to confirm that a normal head removal (i.e., dry fuel transfer canal) was possible

2. Install a canal fill and drain system, including a modified canal seal plate (CSP) for long term leak tightness, that could be operated from outside the reactor building as an alternative method of providing radiological shielding and airborne radioactive contamination control

3. Shield the reactor vessel head storage stand as required, and enclose the reactor vessel head on the storage stand for long term storage

4. Modify and install the internals indexing fixture (IIF) and fill it with water to provide shielding for the plenum

5. Install a pump in the IIF to process the reactor coolant system (RCS) water and remove dissolved radioactive nuclides

6. Install a remote level indication system in the IIF

7. Provide and install a shielded work platform on the IIF with removable panels for performing future disassembly and defueling operations.

The results of the underhead characterization program revealed that radiation levels would be higher than predicted previously and that control of airborne radioactive contamination would be less of a problem than expected. In addition, a rapid increase in release of dissolved radioactivity occurred when the system was opened for the underhead characterization program and the reactor coolant became saturated with air. This resulted in revising the equipment and installation sequence. Based on this information, changes were made in the planned operations to perform the head lift using remotely operated equipment, but the basic steps from the original plan were unchanged.

The head was scheduled for removal June 30, 1983, seven months after the polar crane was refurbished, load tested, and qualified for use during head removal. A 14 month delay in the polar crane program, coupled with funding limitations in 1983 that reduced the work force and delayed procurement of equipment, caused the head removal to be postponed until July 23, 1984, when the reactor head was lifted and moved to the storage stand. The IIF was then rigged to the polar crane and installed on the vessel flange.

This report presents the head removal planning, preparations, operations, and lessons learned from those operations. Figure 1 is a bar chart of the month and year each activity occurred. The report is organized into four primary sections: Administration, General Preparations, Head Removal Operations, and Post-Head-Removal Evaluations. Figure 2 illustrates the sequence of operations.

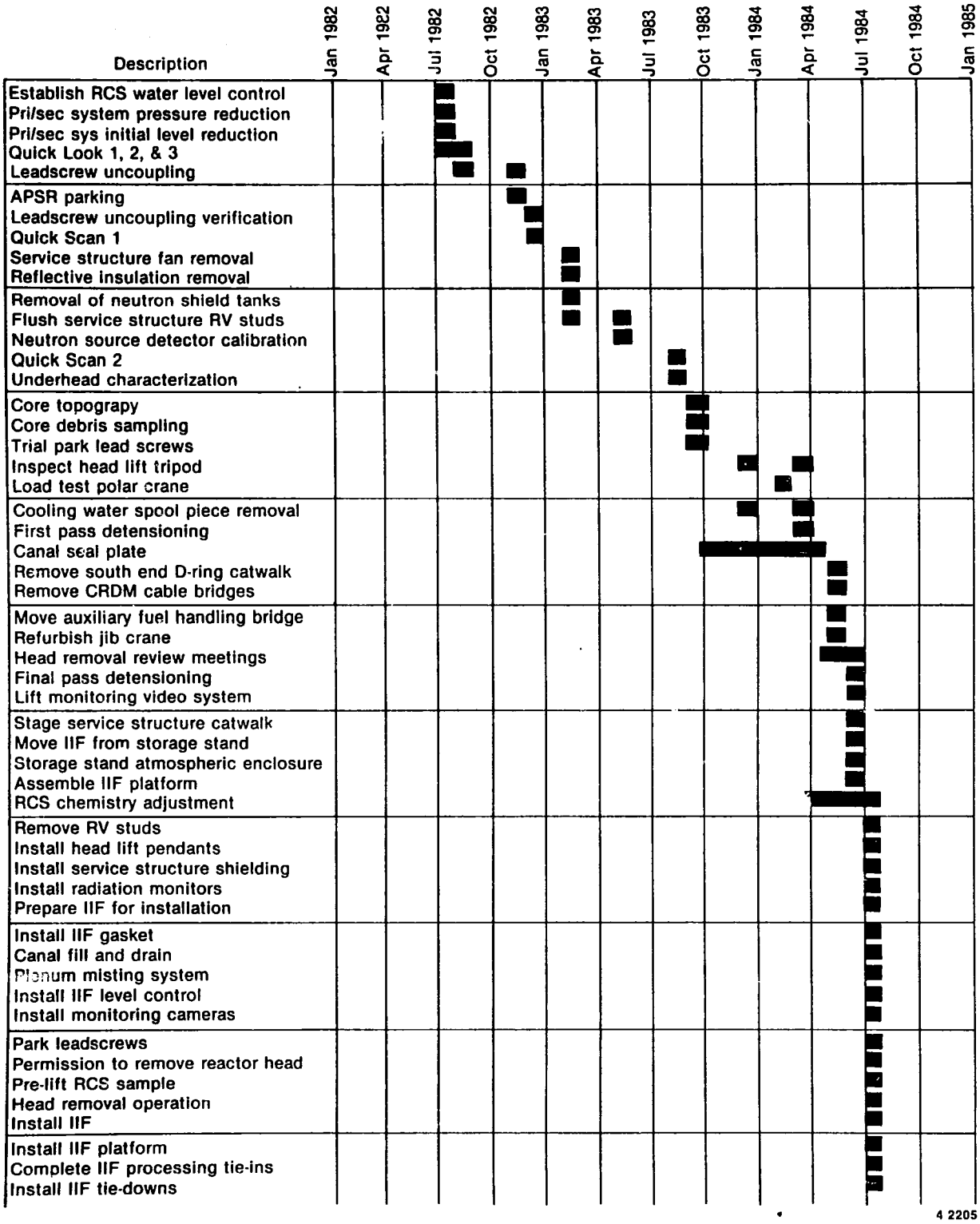

Figure 1. Head removal chronology.

TMI-2. The group's objective is to ensure that approaches to the various cleanup and defueling operations are technically sound. This group consists of about 10 members, plus ad-hoc members called when additional expertise is required. The group responds to specific requests for review and analysis from any of three parties, viz, GPU Nuclear, NRC, or the Department of Energy (DOE). These reviews or analyses may relate to proposed technical approaches or to contingency questions. The TAAG worked in conjunction with the SAB to review head removal documents.

The Chief Operating Officer of GPU Nuclear appointed a chair of the GORB who is responsible for the GORB performance. Members of the GORB comprised GPU Nuclear personnel and independent consultants. GORB had the authority to consider potentially significant nuclear or radiation safety matters independently, including related management aspects of those matters, and to provide advice or recommendations to the Chief Operating Officer. The board or its individual members could at any time present comments to the Chief Executive Officer of GPU Nuclear, the Board of Directors of GPU, or the Board of Directors of any concerned GPU System company on matters within the board's area of responsibility.

2.2 Training

The purpose of the training programs conducted in conjunction with head lift activities was to gain the ability to perform tasks in the reactor building in a safe and efficient manner. Achievement of these goals minimized radiation exposure received by workers and aided in the timely completion of many interdependent tasks. The degree of training, whether a simple briefing or a full scale mockup, was based on the complexity of each task and the potential for reduced radiation dose accumulation. Figure 3 is a list of the mockups and the major tasks for which they were used. Work crews trained on the mockups using the actual procedures and in the simulated conditions of the reactor building. A summary description of the mockups and their uses follows.

2.2.1 CRDM and Service Structure Mockup. The service structure mockup was located in a floor opening in the turbine building to simulate the full length of the service structure. The structure was constructed of wood and contained one actual control rod drive mechanism (CRDM) in the center location and plastic replicas of the other CRDM tubes on the work platform. The mockup was used for training in CRDM removal, CRDM venting,

CRDM and Service Structure Work Area

Core video
Core topography
Core debris sampling
Lead screw uncoupling and parking
CRDM closure removal

Plenum Cover and Head Interface

Head boot installation
Camera positioning
Lift height monitoring
Logistics and communications

Auxiliary Fuel Handling Bridge

Disassembly of AFHB mast and trolley

IIF and IIF Platform

Platform assembly and landing
Tag line routing
Remote unlatching
IIF processing equipment mounting and remote connections
Partial checkout of processing equipment
IIF gasket installation
Seal plug installation

Stud Cleaning and Detensioning

Detensioning and stud removal
Stuck stud nut removal
Stud cleaning
Nitrogen testing

Figure 3. Training mockups.

and lead screw parking. Many of the in-vessel data acquisition tasks used this mockup for training.

2.2.2 Plenum Cover/Head Interface Mockup. The lower portion of the plenum cover/head interface mockup consisted of a circular section of plywood with plastic tubes representing the peripheral control rod guide tubes and the two guide studs on the vessel flange. The upper portion was a wooden structure designed to simulate the head flange area and was suspended by a turbine building crane over the lower portion. Proof of principle testing was conducted on this mockup for the contamination control assembly (head boot) to ensure the viability of the installation method and the sealing capability of the boot. The mockup was also used to establish the camera positions and for lift monitoring equipment checkout. The ability to monitor the lifting and leveling of the head remotely was verified on this mockup.

2.2.3 IIF and IIF Platform Mockup. The IIF mockup simulated conditions inside the reactor building more closely than any of the other mockups used (Figures 4 and 5). A steel cylinder was fabricated to the same dimensions as the IIF and located in the turbine building. The bushings, which were to be installed on the IIF, were first installed on the mockup for training in setting the IIF on the vessel flange. As with the previous mockup, the lifting and installation activities were monitored by the same camera arrangement that was used in the reactor building. New remote unlatching devices were installed and tested on this mockup.

The IIF platform, which was used to cover the IIF, was first assembled in the turbine building and installed on the IIF mockup to verify proper fit and to develop the rigging and installation techniques to be used during the actual installation. The guidepins and receiving funnels were developed for installing the platform during this training.

The IIF mockup was additionally used for checkout of the installation of the IIF processing and level monitoring equipment. The majority of the start-up tests were also performed, which saved time and radiation exposure in the reactor building. Upon completion of the mockup training, the IIF platform, IIF processing, RCS sampling system, and IIF level monitoring equipment were disassembled and transferred to the reactor building.

2.2.4 Reactor Vessel Stud Detensioning Mockup. The reactor vessel stud detensioning mockup consisted of a full length stud installed in a holding fixture with two partial studs on either side to simulate the confined spaces of the actual working area. Equipment used for detensioning was installed on the mockup and crews practiced rigging and operating the equipment on the mockup. The mockup was also used for proof of principle testing of stud cleaning tools and stud loosening techniques, including the liquid nitrogen cooldown technique used to free stud 6. In addition, the mockup was used for acceptance testing of the modified and refurbished stud tensioner.

2.2.5 Auxiliary Fuel Handling Bridge Mockup. A full size auxiliary fuel handling bridge (AFHB) was assembled in the turbine building over a truck bay to permit crews to practice disassembly and removal of the mast and trolley from the AFHB in the reactor building (Figure 6). The mockup was a spare bridge that was a duplicate of the AFHB in the reactor building.

2.2.6 Training Summary. The mockup training program was of great value to the head lift task. Time and motion studies conducted during some of the training demonstrated a significant reduction in task execution time as training progressed. This time savings translated directly into reduced exposures, as demonstrated by comparing the forecast vs. actual exposures exhibited in section 5.1 of this report.

2.3 Pre-Head-Lift Data Acquisition

During 1982 and 1983, significant data were obtained through a series of underhead data acquisition projects. Underhead data acquisition and trial parking of five lead screws provided the majority of the data used to plan head removal. Other data acquisition tasks were directed primarily at follow-on tasks; however, the Quick Look video inspections, axial power shaping rod (APSR) parking, core topography, and core debris grab samples yielded significant data that were used throughout the head removal program. The results of these projects are described briefly below.

2.3.1 Quick Looks 1, 2, and 3. During July and August 1982, three video inspections provided the first views of the damaged fuel and other components inside the reactor vessel. The technical plan

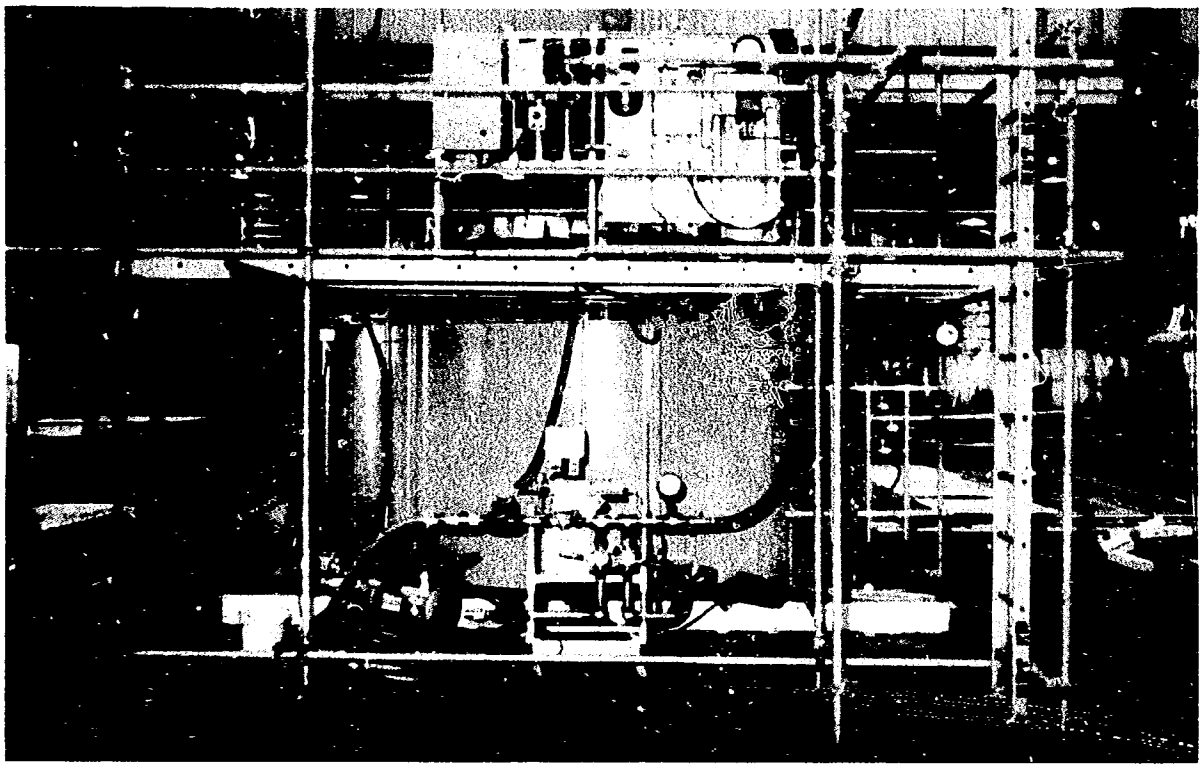

Figure 4. IIF mockup.

for reactor disassembly and defueling (RD&D) specified a pre-head-lift examination (PHLE) involving the removal of a CRDM and the insertion of a television camera through the empty CRDM nozzle. Because of limited overhead clearances with the missile shields in place and the unavailability of the polar crane to relocate the shields, the PHLE required a complex hoisting, rigging, and cutting scheme to remove the CRDM. Therefore, a simpler approach was pursued, viz, Quick Look.

The Quick Look examination was performed by inserting a miniature television camera through a lead screw opening into the core region. Lead screws were removed from CRDMs H-8, E-9, and B-8 with the missile shields still in place. A hoist cable was threaded through the separation between two missile shields and attached to each of the three lead screws, which were withdrawn, cut, and disposed of as waste.

On July 19, 1982 the lead screw for the CRDM at the center of the core (H-8) was removed, and the first Quick Look inspection was performed. On August 5 and 6, 1982 the lead screws were removed at locations E-9 and B-8 and the second inspection was performed. The CRDM lead screw spider was still attached at the B-8 location, however, which prevented the camera from being inserted at that location. On August 12, the third and final inspection was performed. In addition, the core debris bed was probed with a stainless steel rod for depth and degree of compaction.

The Quick Look Review Group concluded that the TMI-2 fuel was severely damaged. The upper plenum assembly appeared relatively undamaged; however, some upper end fittings with partial fuel assemblies hanging from them were attached to the upper grid. A void 1.5 m in height in the upper central portion of the core was identified and a portion of the fuel was in the form of rubble. The steel rod penetrated the loose core material to a depth of approximately 35 cm.

2.3.2 Underhead Data Acquisition. Following the Quick Look examinations, the need for additional visual inspections and information regarding the radiological condition of the underhead volume was identified. To satisfy this data requirement, Quick Scans 1 and 2 and the underhead characterization examinations began in December 1982. For

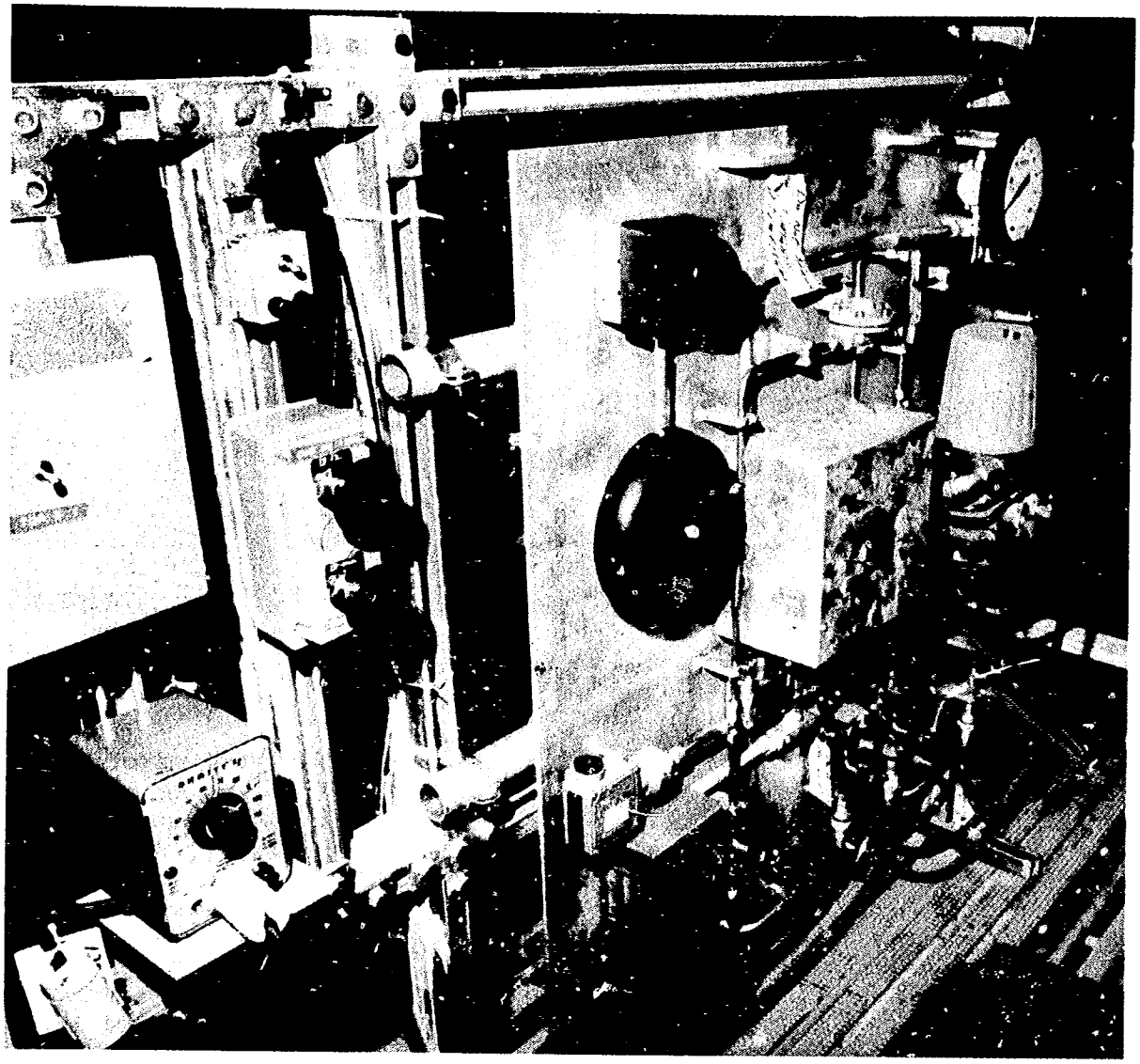

Figure 5. IIF mockup level and alarm instrumentation.

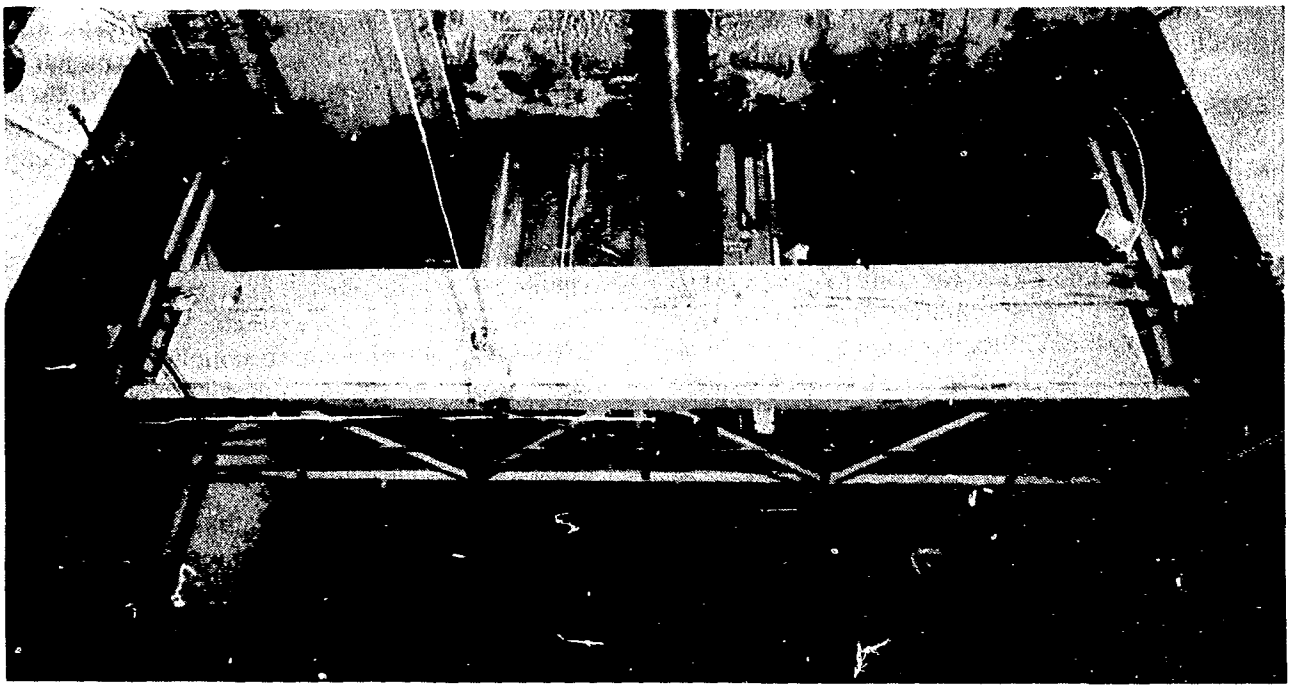

Figure 6. Auxiliary fuel handling bridge.

Quick Scan 1, an ionization chamber was lowered into the reactor vessel through the lead screw openings at two locations (H-8 and E-9). This operation provided the first radiation readings under the reactor vessel head and on top of the plenum. Quick Scan 2 was performed as part of the underhead characterization program after CRDM removal.

The H-8 CRDM motor and lead screw support tubes were removed to gain access to the top of the plenum. A new hoist with horizontal/vertical mobility was installed under the missile shields to lift and maneuver the CRDM stators and the CRDMs over the service structure. After the H-8 CRDM was removed, a manipulator support tube was installed on the CRDM nozzle flange to support and guide the tools into the head volume. Video inspections, plenum debris sampling, thermoluminescent dosimeter (TLD) readings, and ionization chamber readings were taken during this data acquisition phase.

The first two video inspections were performed with the plenum covered with water. The water cover was necessary because of concern that pyrophoric materials were present on the plenum cover. The video inspections revealed a fine layer of debris on the plenum cover. A sample of the debris was obtained and no pyrophoric characteristics were observed. A third video inspection was performed at water level and at 30 cm below the top plenum surface following the negative results of the pyrophoricity tests.

Prior to obtaining the pyrophoricity data, a flushing system was designed and procured to wash debris from the plenum into the reactor vessel. Pyrophoricity tests were also performed on a 25 cm section cut from the center (H-8) lead screw. The plenum flushing program was canceled, based on the clean condition of the plenum, thereby saving time, expense, and exposure.

The TLD data, which were supported by the ionization chamber tests, resulted in measured dose rates as high as 600 R/h at the B-8 and E-9 positions. Dose rates at the H-8 position were calculated to be almost 1000 R/h. Computer modeling of the reactor vessel was performed to forecast radiation levels during head lift operations. The analytical tools used were: (a) reactor shielding design manual, (b) ISOSHLD—a computer code for general purpose isotope shielding analysis, and (c) Grace-1 and Grace-2 computer codes.

Refueling canal area radiation projections with the head removed were prepared using the above empirical data. The actual radiation readings were four to six times less than expected.[4] It was concluded from these data that the dose rates were

within acceptable limits to remove the head without flooding the canal.

2.3.3 Axial Power Shaping Rod Insertion. When the accident occurred, the eight APSRs were withdrawn 25% of their length. A test was performed to insert the APSRs to a hard-stop position, or to a position limited by the force capability of the APSR stator. This was done to obtain information on the physical condition of the control rod drive motors, the APSRs, the upper plenum guide tubes, and possibly the core. The test yielded direct information on the condition of the CRDMs and allowed inference of the condition of the lead screws and upper plenum guide tubes.[5] Following the attempt to insert the APSRs, the lead screws were uncoupled and withdrawn to the parked position.

2.3.4 Core Topography. To confirm earlier camera observations and gain a better understanding of the radial and axial extent of the core void, sonar mapping of the core void was conducted on August 31 and September 1, 1983. The sonar scanning device used 12 acoustic transducers. The transducers were mounted in pairs at six different angles ranging from 60 degrees to 90 degrees below the horizontal. The sonar boom was lowered into the core void area through the manipulator support tube at the H-8 CRDM. A mechanical drive system was used to raise, lower, and rotate the boom. Approximately 500,000 data points were obtained and processed by computer to provide a precise three-dimensional model of the 1.5 m-deep core void region.

The core topography studies provided quantified data on the damaged core conditions. A significant number of partial fuel assemblies were suspended from the upper plenum grid. Most of these assemblies extended only a short distance into the void. The damaged zone was generally symmetrical about the core centerline and extended to the perimeter. Forty partially damaged but intact fuel assemblies existed around the perimeter of the core.

2.3.5 Core Debris Grab Sample. A program to obtain samples of the damaged fuel material and rubble bed was conducted in September and October of 1983. The effort included retrieval and offsite analyses of six grab samples of loose fuel debris from the rubble bed. The analyses of the samples included particle size distribution; fuel content, i.e., relative amounts of cladding, structural, and control materials; presence of various isotopes and curie content; bulk density; gross gamma radiation and gamma scanning; chemical composition; presence of pyrophoric materials; and a visual description. A second set of five samples was obtained in March 1984.

2.3.6 Trial Parking of Lead Screws. Trial parking of four lead screws was performed to obtain empirical data which could be extrapolated to estimate the dose rates from the service structure area after all remaining shim drive lead screws were parked for the head lift. Projections of service structure dose rates of 21 R/h (contact) contributed to plans for installing 2 cm-thick lead blankets around the service structure. Based on the observed dose rates from the trial parking experiment, the contact dose rate at the service structure was revised to 8 R/h (contact) without the lead blankets in place. The projected dose rate with the blankets in place was approximately 800 mR/h.[6] Based on these projections, the decision was made to continue with the installation of the lead blankets. Post-head-lift radiation measurements at the head and around the storage stand showed values to be less than forecasted.

3. GENERAL PREPARATIONS

Several general preparations for head lift required significant time and effort. The reflective insulation around the head flange service structure fans, cooling water spool pieces, and CRDM cables and bridges were removed prior to head lift. These removals accomplished several goals, including elimination of radioactive sources in the work area and increased access to reactor vessel work areas. Other general preparations included primary and secondary systems water level adjustments, decontamination flushing of the service structure and studs, relocation of the D-ring catwalk, and relocation of the AFHB.

3.1 Primary and Secondary Systems Water Preparations

Primary and secondary systems preparations were divided into two distinct areas: (a) those required to support changes in RCS levels for inspections and head removal and (b) those necessary to maintain criticality control and reduce radiation exposure to workers.

3.1.1 Reactor Coolant System Level Indication. Preparations for establishing RCS water level indication began in the spring of 1982 when the decision was made to perform Quick Look. A system for remote RCS water level indication was installed to support Quick Look activities. Two level indicators were installed on the decay heat line. A pressure transmitter was installed using existing cables to provide a digital readout at the local standby pressure control (SPC) operating panel and at the SPC panel in the control room. A Barton gage was also installed to provide direct indication in the fuel handling building valve room (281 ft elevation) and to serve as a backup for the pressure transmitter. Both instruments were calibrated to read 0 to 600 in., with 0 being equivalent to the 315 ft-6 in. elevation, the centerline of the hot leg nozzle.

For head lift, another independent level instrument was installed because both the pressure transmitter and the Barton gage would be isolated if the decay heat outlet valve had to be closed. A level standpipe (Tygon tube) was connected to the 2A reactor coolant pump discharge line. This provided three level indication instruments, two of which were independent.

The plan for RCS drain specified that a nitrogen blanket be maintained on the RCS until the reactor vessel head was vented. A dedicated nitrogen system was installed to provide the gas cover because of the excessive radiation exposure which would be required to restore the original system to operable status.

3.1.2 Primary and Secondary Systems Pressure Reductions. To ensure that the RCS drained properly, (i.e., the two hot legs and pressurizer would be at the same level) the pressurizer and both hot legs were vented prior to the start of draining. Any vented gas was diluted as it was expelled from the RCS to the reactor building to ensure that the mixture would not be hazardous. A blower for hydrogen dilution was constructed and installed for Quick Look.

Pressure reduction was accomplished by isolating the SPC system and beginning normal letdown to the reactor coolant bleed tanks (RCBTs). This process continued until a vacuum was drawn on the hot legs, as indicated by the installed compound pressure gages, at which point letdown was temporarily secured. Nitrogen was then piped from the nitrogen manifold to the pressurizer and the two hot legs, and letdown was resumed. This method of RCS pressure reduction, with minor modifications, was also used for head lift draining.

3.1.3 Primary and Secondary Systems Water Level Adjustments. Manipulation of the RCS level was required to perform data acquisition tasks, adjust the RCS chemistry, and lower the RCS level below the vessel flange for head lift. The secondary side had to be lower than the primary side to ensure that leakage did not occur from the secondary to the primary and to maintain a primary to secondary pressure differential. Secondary water level adjustment was not a problem for Quick Look because the level requirement (330 ft elevation) was well above the once through steam generator (OTSG) feedwater header (323 ft elevation). In this instance, water was drained from the feedwater headers to an elevation below the lowest RCS level. However, the RCS level had to be below the 322 ft elevation for head lift, which required the secondary level to be less than 313 ft—more than 10 ft below the OTSG feedwater headers. This level requirement, coupled with the need for both

OTSGs to be in this condition for an extended period of time, required additional efforts to achieve layup conditions.

For long term layup, both OTSG secondaries were filled with water, chemically adjusted, recirculated, and drained. In addition, the B OTSG secondary water was processed to remove slight radioactive contamination. The A OTSG was filled with demineralized water using the OTSG recirculation system (GR system) which had been installed after the accident. The GR system provided recirculation external to the reactor building via the main steam and feedwater headers. The water was chemically adjusted for wet layup conditions, and then the secondary side was filled to ensure that the upper OTSG tube sheet was wetted with layup-grade water. The A OTSG was drained via the GR system to the bottom of the feedwater header. From the 323 ft elevation the steam generator was drained via the normal low level sample line to the secondary system laboratory sample sink. This sample path was a 1 cm tubing line; two weeks were required to drain 5000 gallons.

Coolant in the B OTSG secondary side was recirculated through an ion exchanger (located in the turbine building) to remove low level contamination. The GR system was then used to fill, chemically adjust, recirculate, and wet the upper tube sheet of the B OTSG. The GR system was also used to drain the B OTSG to the elevation of the feedwater header. However, the same method used to drain the A OTSG to the sample sink could not be used because an inaccessible valve located in a high radiation area failed in the closed position. A drain hose was remotely installed on the isolation valve test connection and routed to a floor drain on the 305 ft elevation of the reactor building to provide a flow path to drain the A OTSG.

Primary system water level adjustments for head lift were made in much the same way as for the Quick Look and data acquisition tasks. The SPC system was isolated and letdown was continued until a vacuum was indicated in both hot legs, at which point a nitrogen blanket was established. Letdown of the RCS continued until the RCS level was at the 322 ft-6 in. elevation. At this level, nitrogen overpressure was adjusted to a nominal 16 psi (atmospheric) and the reactor vessel head was vented via the CRDMs. The RCS level was then lowered to the 321 ft-6 in. elevation by draining from the standpipe sample line, an abnormal drain path. This flow path was used because a plant problem (viz, back pressure in the waste gas vent header) prevented use of the normal letdown flow path to the bleed tanks.

3.1.4 Reactor Coolant System Chemistry. The RCS chemistry was adjusted to maintain criticality control in support of head lift and defueling operations. The soluble radioactivity levels were also reduced by processing to minimize radiation exposures to head lift personnel. The RCS boron concentration required to preclude criticality under all defueling conditions was not finalized before head lift. Therefore, the minimum boron concentration in the coolant was increased to 5000 ppm.

3.2 Equipment Removals

3.2.1 Reflective Insulation. The reflective insulation on the head flange was removed to gain access to the reactor vessel studs. The insulation was removed and stored in the refueling canal in February 1983. In August 1983, the insulation was transferred to the 347 ft elevation where it was sectioned and disposed of as waste.

3.2.2 Service Structure Fans. During the accident, the service structure fans became highly contaminated because they were circulating contaminated reactor building air (Figure 7). The service structure was flushed to provide dose rate reduction in the area of the reactor vessel head flange. The flushing did reduce area dose rates but did not eliminate the dose rate contribution of the fans. After flushing, the 12 fans were removed from the service structure and disposed of as radioactive waste.

3.2.3 D-Ring Catwalk. The D-ring catwalk at the south end of the refueling canal had to be relocated for both the AFHB transfer and the head lift transfer. The south catwalk was hoisted by the polar crane and placed on top of the missile shields, which were stacked over the B D-ring.

3.2.4 Cooling Water Spool Pieces. The two CRDM cooling water spool pieces between the manifold on the head service structure and the B D-ring wall were removed as part of the normal tasks for a head lift (Figure 8). The two spool piece piping sections were unbolted and rigged from beneath the missile shields, staged to the 347 ft elevation, and disposed of as radioactive waste. A cooling water pipe support mounted on the A D-ring wall was also removed to allow the AFHB to pass to the north side of the service structure.

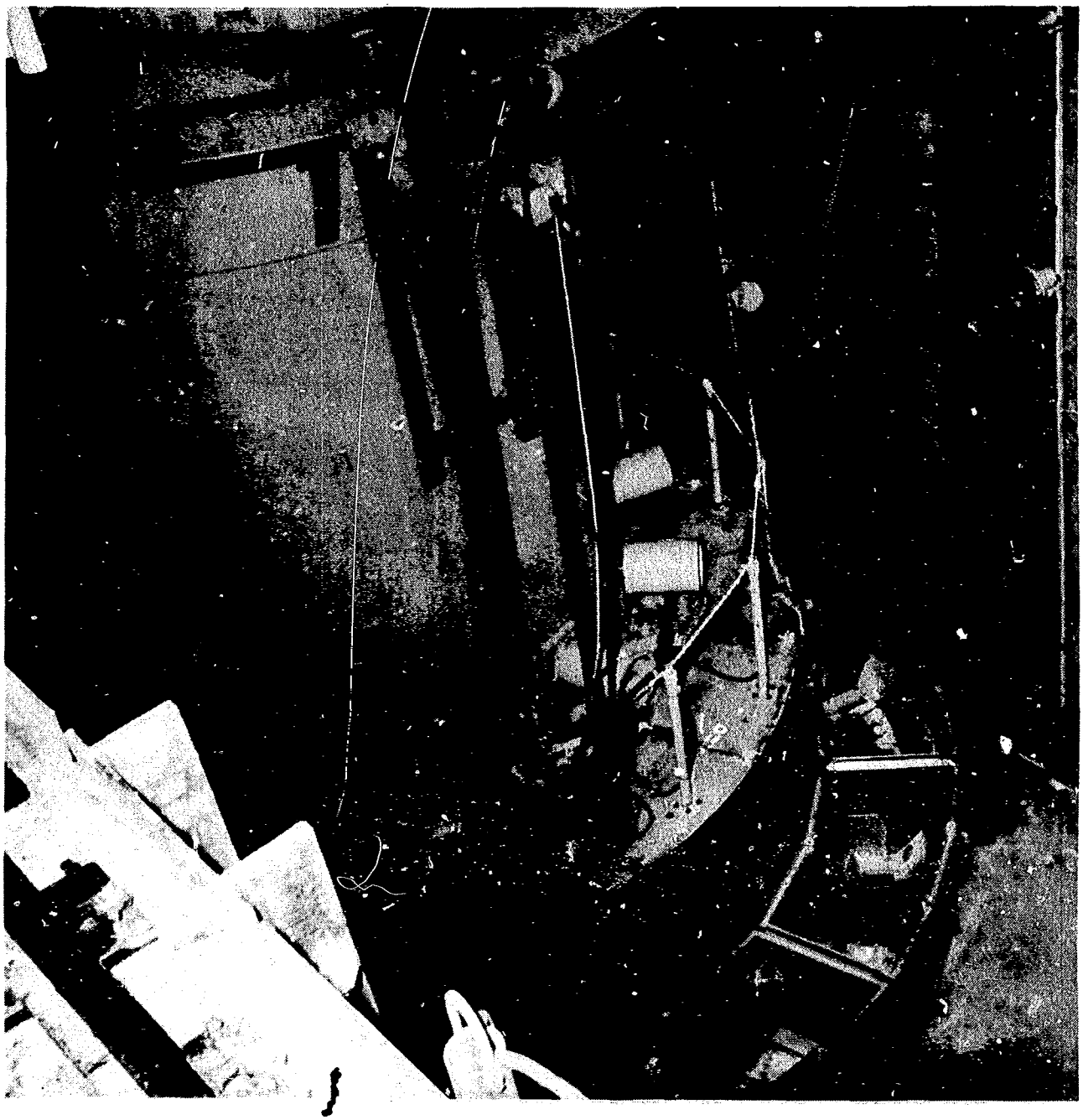

Figure 7. Service structure showing fans and exhaust ports, neutron shield tanks, walkway over reflective insulation, and hoist.

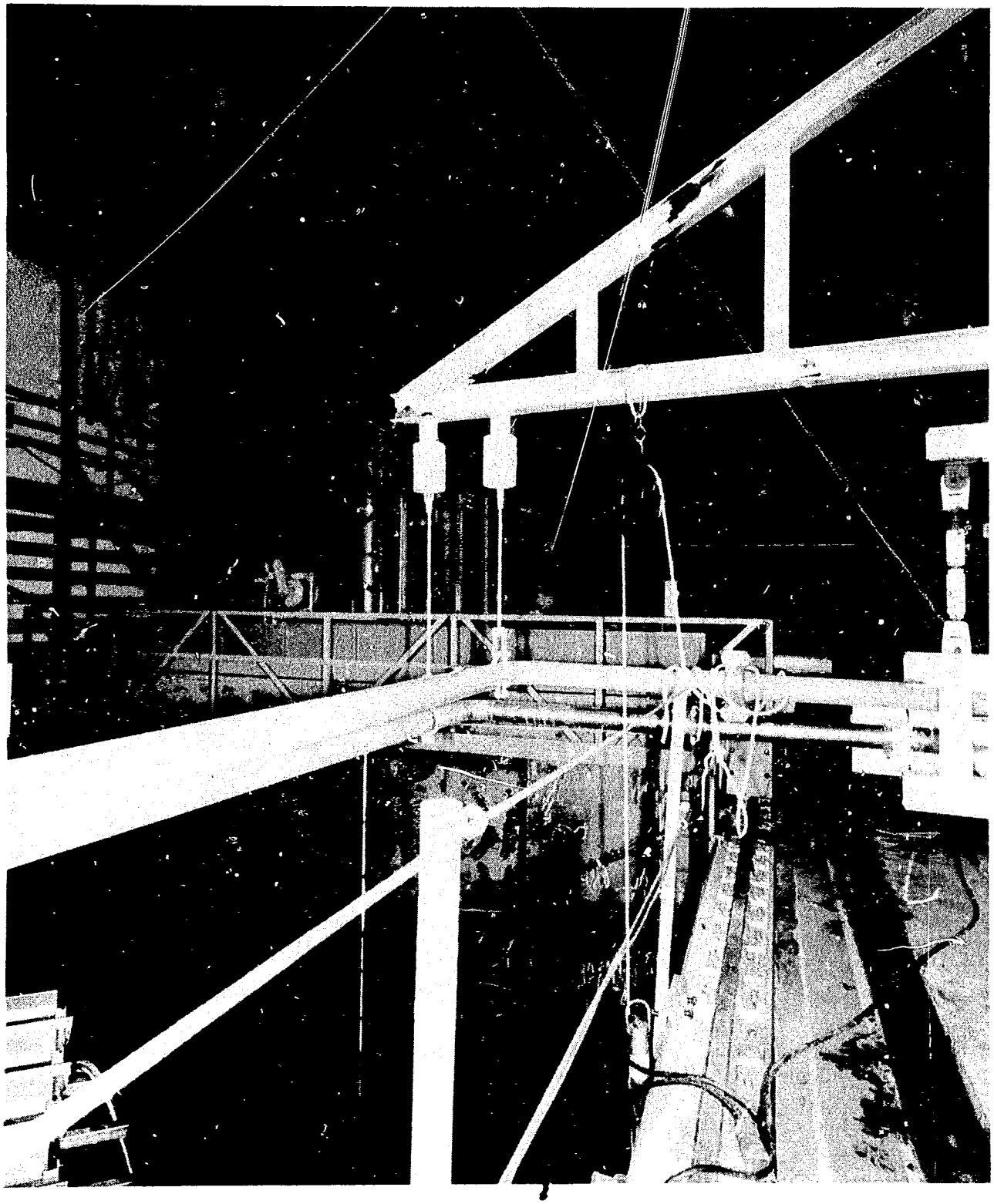

Figure 8. Cooling water spool piece and support hanger.

3.2.5 Control Rod Drive Mechanism Cable Bridges. The CRDM cable bridges, which are hinged to the service structure and normally pivoted to the vertical for head lift, were removed from the service structure (Figure 9). The cable bridge on the north side of the service structure was removed to make room for the AFHB, which had to be moved from the south to the north end of the refueling canal. The second cable bridge was removed to permit easy access to the lead screws if necessary for post-head-lift activities.

The two cable bridges were removed from the service structure in early May 1984. In June 1984 they were dismantled, removed from the reactor building, and disposed of as radioactive waste.

3.2.6 Auxiliary Fuel Handling Bridge. The AFHB was moved from the south end of the refueling canal to the north end to provide a low height lift path for the reactor vessel head as it was traversed through the refueling canal. This requirement was caused by the reactor vessel head load drop analysis, which limited the actual head lift to a maximum height of 1.4 m while any part of the head was still over the reactor vessel (see Figure 6).

Prior to moving the AFHB, a considerable amount of preparation in the reactor building was required. The underwater television system and the refueling mast assembly were removed from the bridge. The bridge trolley components were also removed and a work platform was installed on the bridge trucks. Although the platform was provided for plenum removal activities, it was more efficient to install it prior to AFHB movement. Components removed from the AFHB were sectioned with oxygen/acetylene and plasma arc torches and disposed of as radioactive waste.

3.3 Refueling Canal Fill and Drain

The existing canal fill and drain system could not be made operable because of inaccessible valves in a high radiation area. A new canal fill system was designed and installed to provide a means of quickly filling the refueling canal if additional radiation shielding and contamination control were necessary during or after head removal. The new drain system would have emptied the canal to permit post-head-lift operations in the canal to proceed. Preparations for refilling the canal included

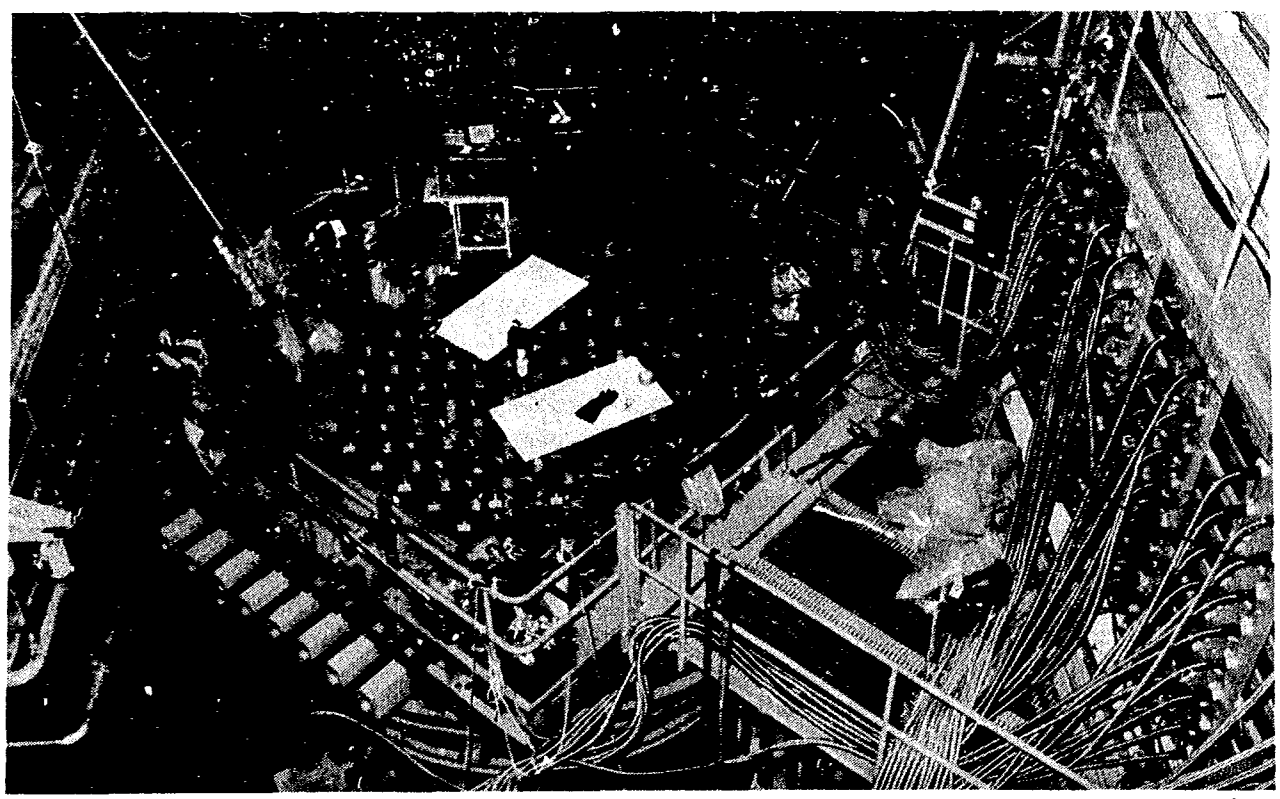

Figure 9. Service structure platform, CRDMs, and cable bridges.

removal of the neutron shield tanks and modification and installation of the CSP. In addition, calibration of the neutron source range detectors was performed because CSP installation would make them inaccessible for future operations.

3.3.1 Canal Seal Plate. Seal integrity requirements for the CSP were based upon the canal being filled for an undetermined length of time for defueling. Experience with this type of CSP indicated that some leakage was experienced during flooded conditions. While this was acceptable for short durations (e.g., normal defueling), it was not acceptable at TMI-2 because of the indefinite need period, the difficulty of leak repair, and the limited capacity of water processing available with the submerged demineralizer system (SDS) equipment. The two-piece CSP required the design of gaskets and a sealing system for the vertical flanges in addition to those required for the horizontal sealing surfaces. The two-piece design also required rigging the two halves from their storage location on the 347 ft elevation deck to the canal floor. The rigging was accomplished without the use of the polar crane, which had not yet been recertified, and took place with the missile shields still in place. The original design of the plate was changed to satisfy the requirement for a long term flooded condition. In addition to the original installation studs, a combination of hold-down dogs, gaskets, and sealant were used to ensure a water-tight seal.

CSP preparations in the reactor building began in October 1983 when two sections of the plate were trial fitted. This inspection suggested that the plate had been field-modified to compensate for the non-symmetry between the reactor vessel and the opening in the canal floor After some rework, a second trial fit in January 1984 verified that the hold-down dogs could be engaged and that gasket compression could be achieved as designed.

Mockups and training sessions were conducted to prove methods for installing the gaskets (Figure 10), injecting the sealant into the small (less than 3 mm) cracks (Figure 11), and pouring the sealant into the barrier angles. Tests were conducted on the sealant primer using cure times varying from one hour up to four days. The best adhesion occurred when the primer was at least two days old. This information allowed the schedule of work activities to fit normal entry schedules without any impact on the quality of the seal.

The CSP and sealant system were installed in mid-April 1984. First, the CSP was rigged into position over the annulus, and the vertical flange gaskets and spacer washers were installed. Sealant barriers were put into place, and the sealant was injected or poured to complete the CSP installation. A canal work platform was installed over the seal plate to provide a working surface for head lift preparations and to protect the CSP (Figure 12).

3.3.1.1 Neutron Shield Tank Removal. In January 1983, the 12 neutron shield tanks that surrounded the reactor vessel at the canal floor were removed (Figure 11) and disposed of as radioactive waste. The tank removal was a prerequisite to installing the CSP and removal of reflective insulation covering the reactor vessel flange and studs. Their removal also eliminated a source term in the area that had resulted from contaminated water evaporating from the tanks after the accident.

3.3.1.2 Neutron Source Range Detector Calibration. Two ex-core neutron detectors were calibrated to develop response curves that could be used to monitor the count rate of the damaged core. The calibration was a prerequisite to the final installation of the CSP, because once the CSP was installed the wells containing the detectors would be inaccessible. Source range monitors NI-1 and NI-2 and their respective spares were calibrated in May 1983. The intermediate range monitors (NI-3 and NI-4) were observed for response during the testing of NI-1 and NI-2. New gaskets were used when the detector well covers were reinstalled.

3.3.2 Fuel Transfer Canal Fill and Drain Systems. The modified fuel transfer canal fill system was installed to provide a means to flood the refueling canal quickly for shielding protection. The normal method of filling the canal via the spent fuel cooling system could not be used because an essential manually operated valve on the 282 ft elevation was inaccessible because of high radiation levels. The fill method used would have provided RCS-grade borated water from the borated water storage tank (BWST) through a reactor building penetration via the spent fuel cooling pump (high flow) or newly installed diaphragm pump (low flow).

Because of the inaccessibility of the essential valve and the possibility of unnecessarily contaminating a clean system, the transfer canal drain system was rerouted away from the spent fuel cooling

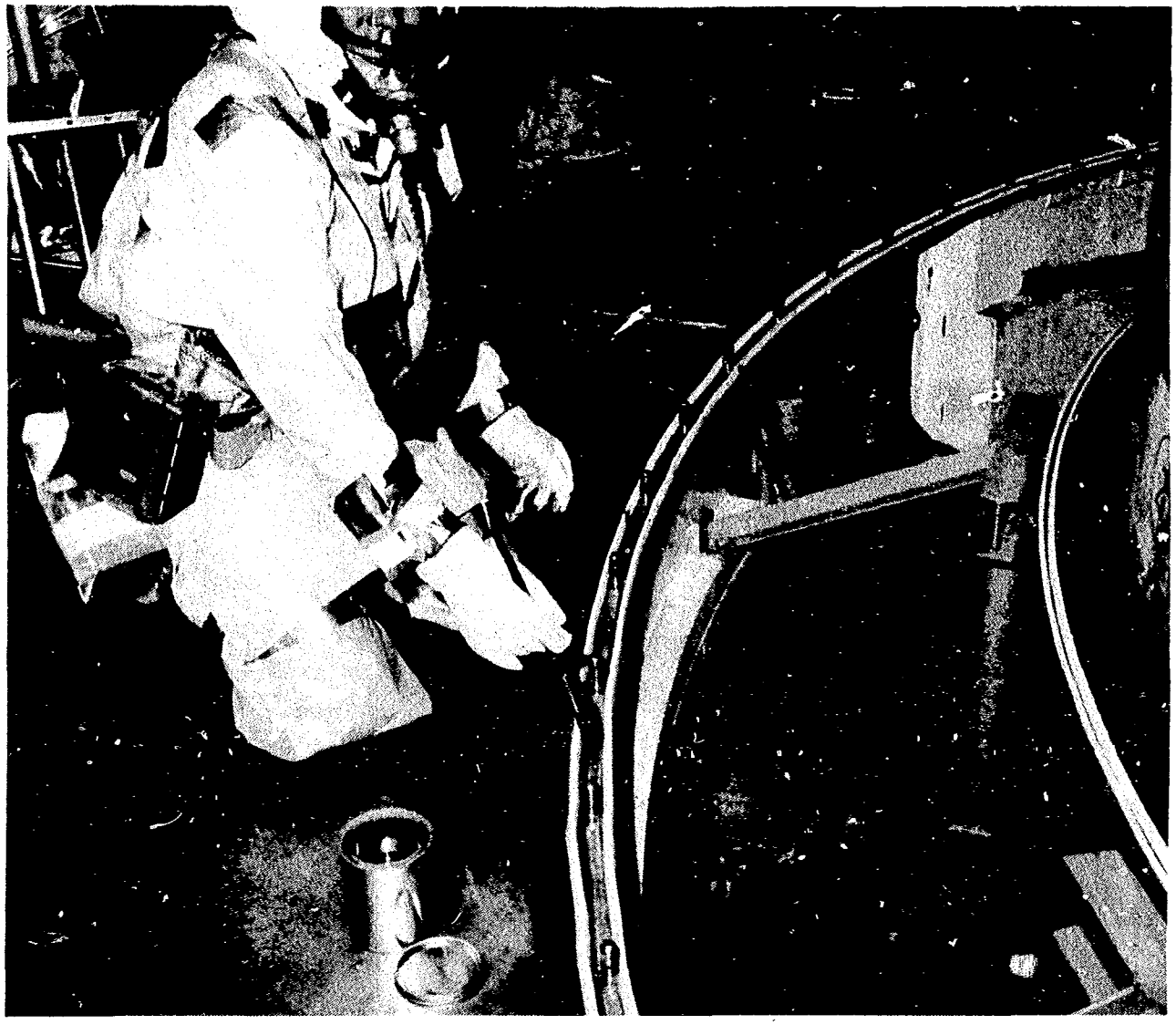

Figure 10. Canal seal plate cleaning and gasket installation.

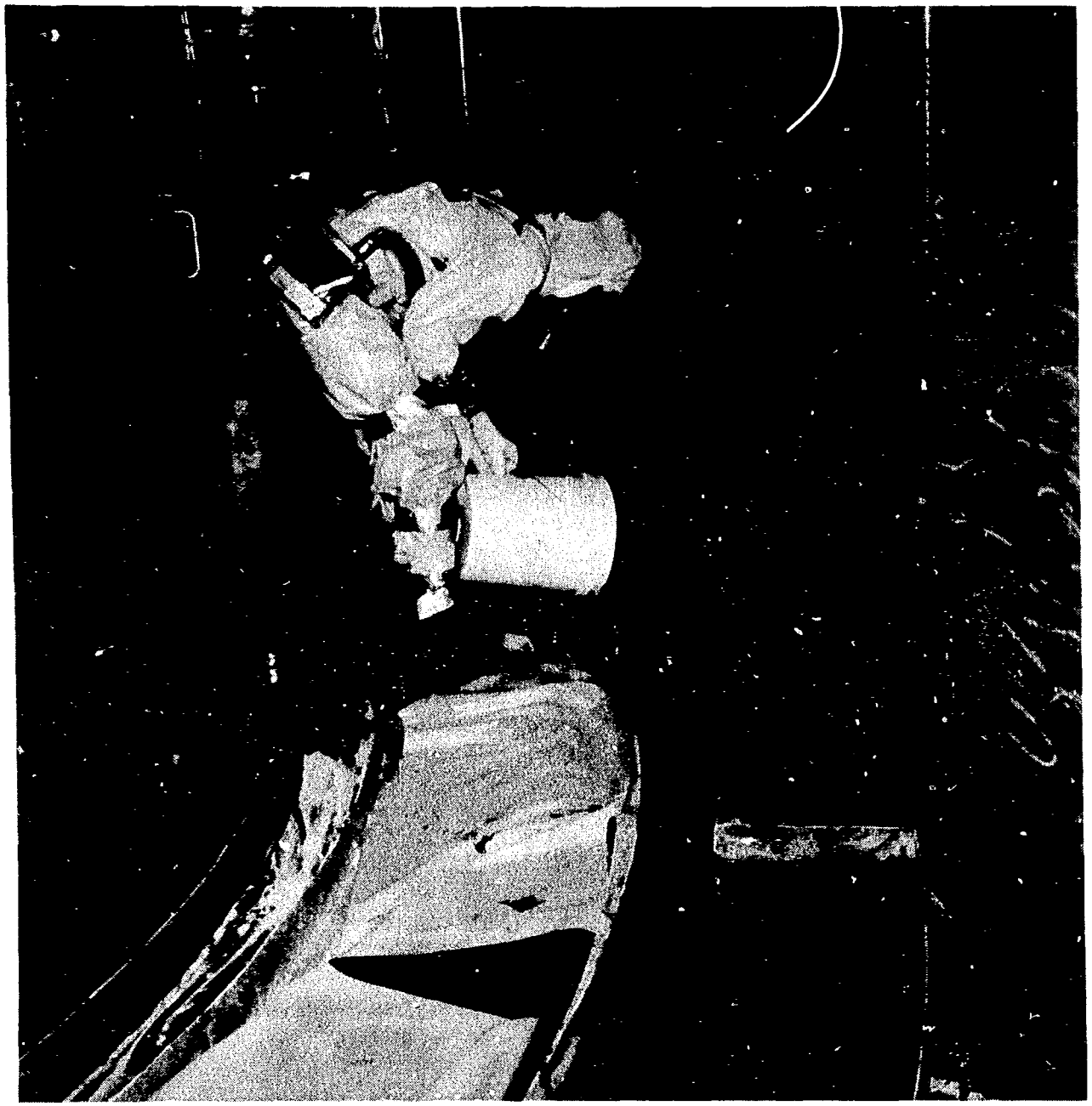

Figure 11. Canal seal plate—pouring sealant in barrier angles.

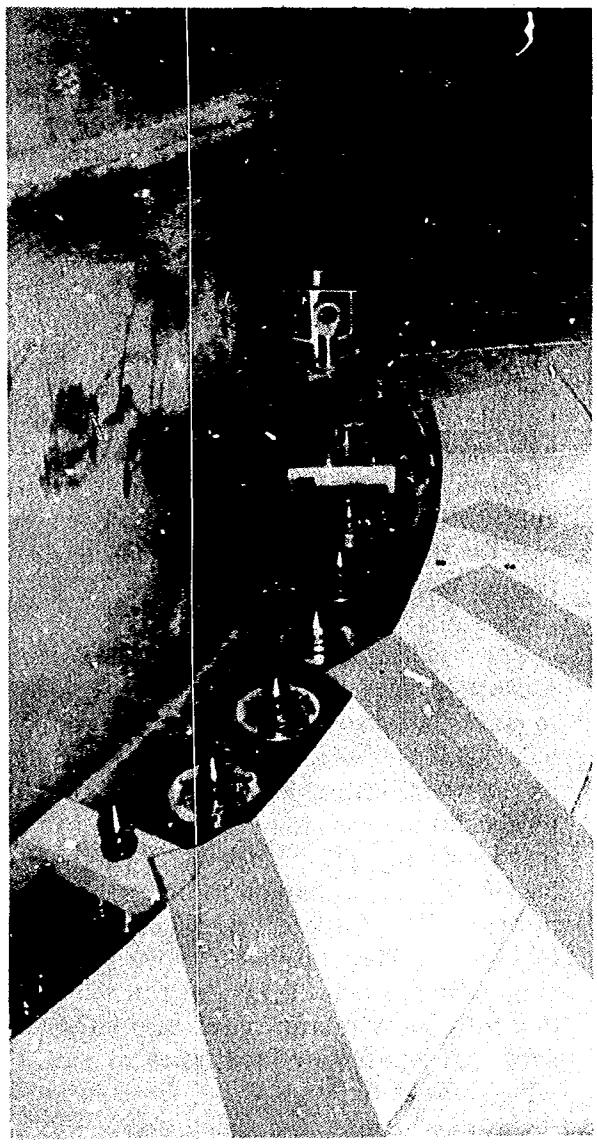

Figure 12. Canal seal plate protective covering, sealed stud holes, IIF hold-down dogs, and IIF flange camera mounting.

system. The drain system would pump water from the canal by a 10 cm submersible pump on the canal floor, and the water would be routed from the pump through a manifold to the SDS for processing. This same manifold was connected to the discharges from the reactor building sump pump and the IIF processing pump. Plugs were inserted into the normal drain lines and a blind flange was installed on the 15 cm drain line. Work on the drain system was completed in July 1983.

3.4 Shim Drive Lead Screw Uncoupling, Verification, and Parking

Shim drive lead screw uncoupling began in August 1982 and was completed in November 1982. Verification was performed in December 1982 to ensure that no partial fuel or control rod assemblies were attached to the lead screws. As a result, the lead screws were placed into three categories based on observations of physical movements made during the uncoupling. The classification was necessary to determine the exact technique to be used for parking operations. A fourth category was added after the lead screw parking experiment conducted in early 1984. At that time, one of the five lead screws tested (trial parked) could not be unparked.

The categories were:

1. The spider (the top piece of the control rod assembly) was no longer engaged with the lead screw bayonet coupling (i.e., when the lead screw was uncoupled, the spider dropped 5 cm or more). Twenty-three lead screws were in this category.

2. The spider was partially engaged with the lead screw bayonet coupling (when these lead screws were uncoupled, the spider assembly dropped less than 5 cm). Four lead screws were in this category.

3. The spider was fully engaged with the lead screw bayonet coupling (during uncoupling, the spider assembly would not move downward). Thirty lead screws were in this category.

4. As noted, one lead screw was in a parked position after the parking experiment; however, the lead screw and torque taker were resting on the torque tube key and the assembly had to be reparked in the normal position to allow possible future removal from the service structure.

The 58 shim drive lead screws, which remained in the reactor vessel head after data acquisition activities were completed, were parked during the period of July 19-21, 1984. Parking the lead screws was required to support the reactor vessel head removal.

The lead screw uncoupling and parking tools were of the same design as tools used at other facilities. In some instances, the tools were modified to cope with unique situations.

The heavy duty lead screw lifting tool is one example. Initial uncoupling efforts used the light weight lead screw lifting tool (Figure 13). The need for exerting a greater lifting force on the lead screws resulted in a heavy duty tool being designed and fabricated. The tools were designed and developed early in the head removal program, and were meant to overcome abnormal forces speculated to exist during CRDM and lead screw removal.

Lead screw parking entails raising a lead screw on the top of its CRDM and securing it in place with a parking tool (C-washer) so that it will not extend below the head flange level and interfere with the lateral movement of the reactor vessel head. The lead screw must be uncoupled from its spider before it is lifted. During the parking operations, nine of the lead screws that had been partially or fully engaged with their spider became fully disengaged. These lead screws and the 23 lead screws in category 1 were then parked using normal techniques. The remaining lead screws were parked using alternate procedures.

One of the lead screws, while being lifted with the lifting tool, became bound 1/2 m short of the parked position and disengaged from the tool when the binding occurred. However, the binding prevented it from dropping back to the inserted position, so the lifting tool was re-engaged. Visual inspections prior to re-engagement verified no apparent damage to the tool or lead screw. After reattaching the lifting tool, the lead screw was parked in the normal manner.

A second lead screw encountered binding after 1 m of withdrawal. The lead screw was lowered to a hard stop position 60 cm short of full insertion, then was manipulated by lifting and shaking until full reinsertion was achieved. At this point, it was uncoupled from the torque taker, withdrawn, and parked.

3.5 Lifting and Rigging

Polar crane reburbishment and recertification were necessary to perform the head lift. The rigging gear used for head lift was inspected and recertified or replaced for the head lift evolution. The wall-mounted jib crane at the head storage stand was also refurbished and used for head lift preparations.

3.5.1 Head Lift Tripod and Turnbuckles Inspections. As part of the lifting assembly inspection, the head lift tripod was cleaned and inspected (magnetic particle inspection) before and after the polar crane load test. Undersize weld lengths, discovered during the initial visual inspection, prompted a thorough re-evaluation of the tripod using sophisticated analytical techniques. Additionally, three of the more highly stressed welds were examined before and after the load test by magnetic particle testing and found to be acceptable. Both the analyses and the inspections verified that the tripod was qualified for lifting the head (Figure 14).

The headlift turnbuckles were also examined because of a generic problem with lock welds used to fasten the jam nut to the turnbuckle body. These lock welds tended to crack when placed under a lifting strain. Magnetic particle inspection of the turnbuckles revealed that the lock welds had cracks that had propagated through the weld into the turnbuckle body. The solution to the problem was to use the TMI-1 turnbuckles, which had not been lock welded. These turnbuckles were also subjected to magnetic particle inspection prior to use. All of the lifting gear was inspected except for the head lift pendants, which were load tested as part of the polar crane load test.

3.5.2 Polar Crane Load Test. Load testing the polar crane in March 1984 resulted in a rated capacity of 170 tn, well below the design rating of 500 tn (Figure 15). The 170 tn rating was sufficient to lift the head and its rigging with a 14 tn margin; no heavier lifts were planned for the polar crane during the recovery program. To provide a test load, the four reactor missile shields and the pressurizer missile shield (total weight 173,000 kg) were stacked in a steel beam framework (rigging and framework—22,000 kg). Following the test, the missile shields were stored over the B D-ring and the pressurizer shield was placed in its original position over the pressurizer.

3.5.3 Jib Crane Refurbishment. The wall-mounted jib crane above the reactor vessel head storage stand was refurbished in May 1984. The original damaged hoist was replaced with a 2 tn chain hoist. The jib crane was load tested,

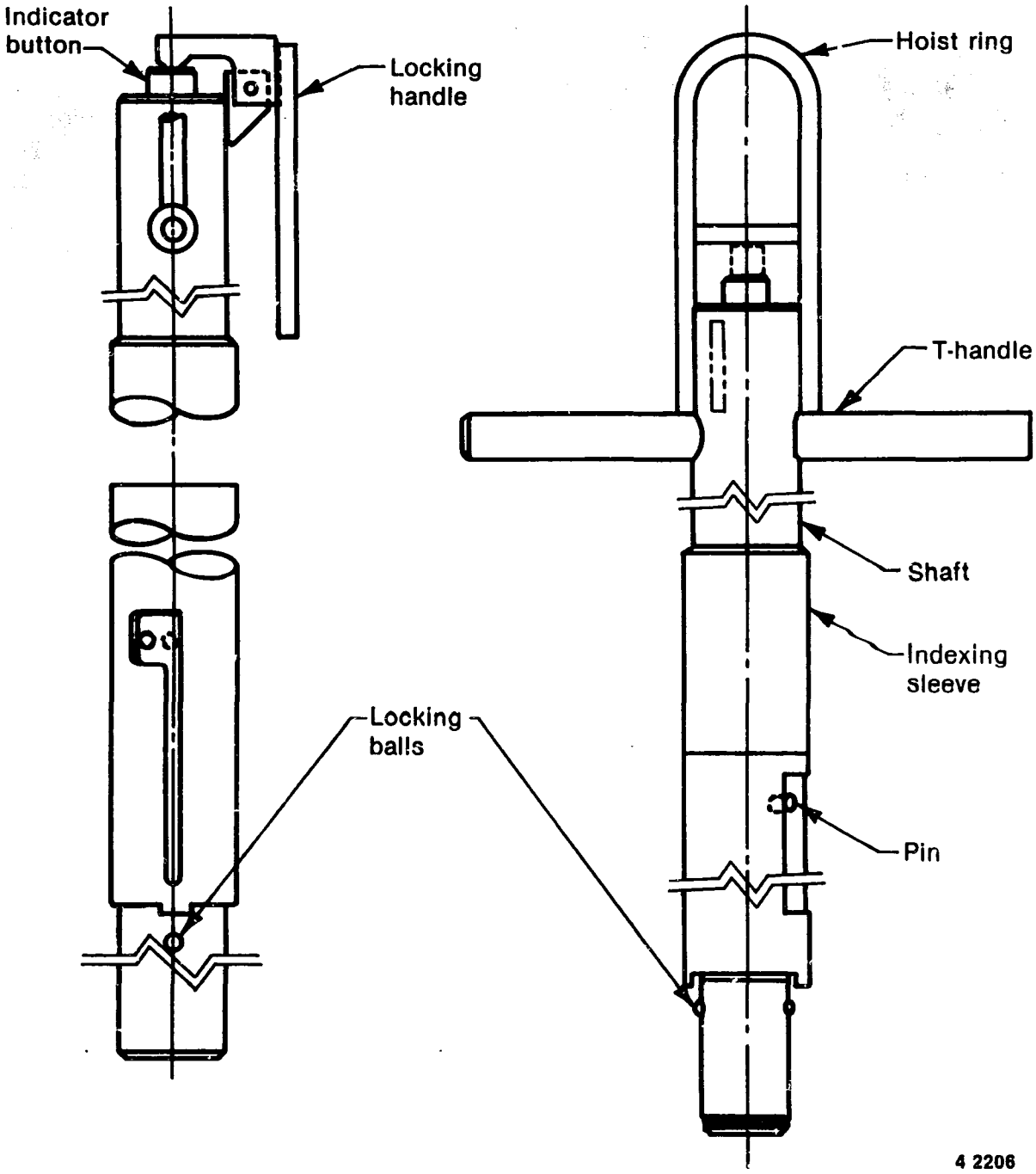

Figure 13. Lead screw lifting tool.

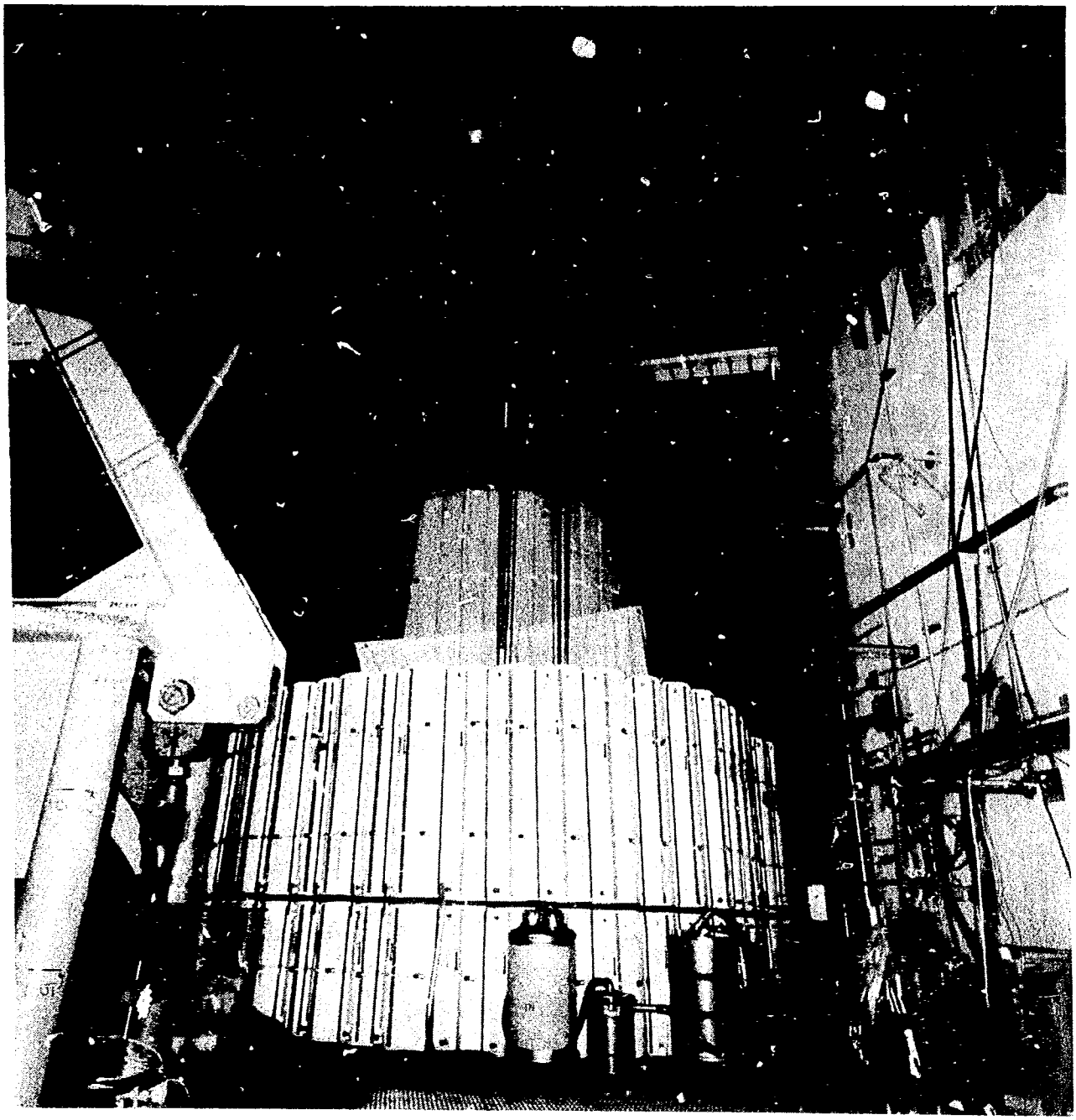

Figure 14. Shielded work station (upper right), walkway to service structure, tripod with turnbuckles (lower left), and 3.5 m sand column shielding.

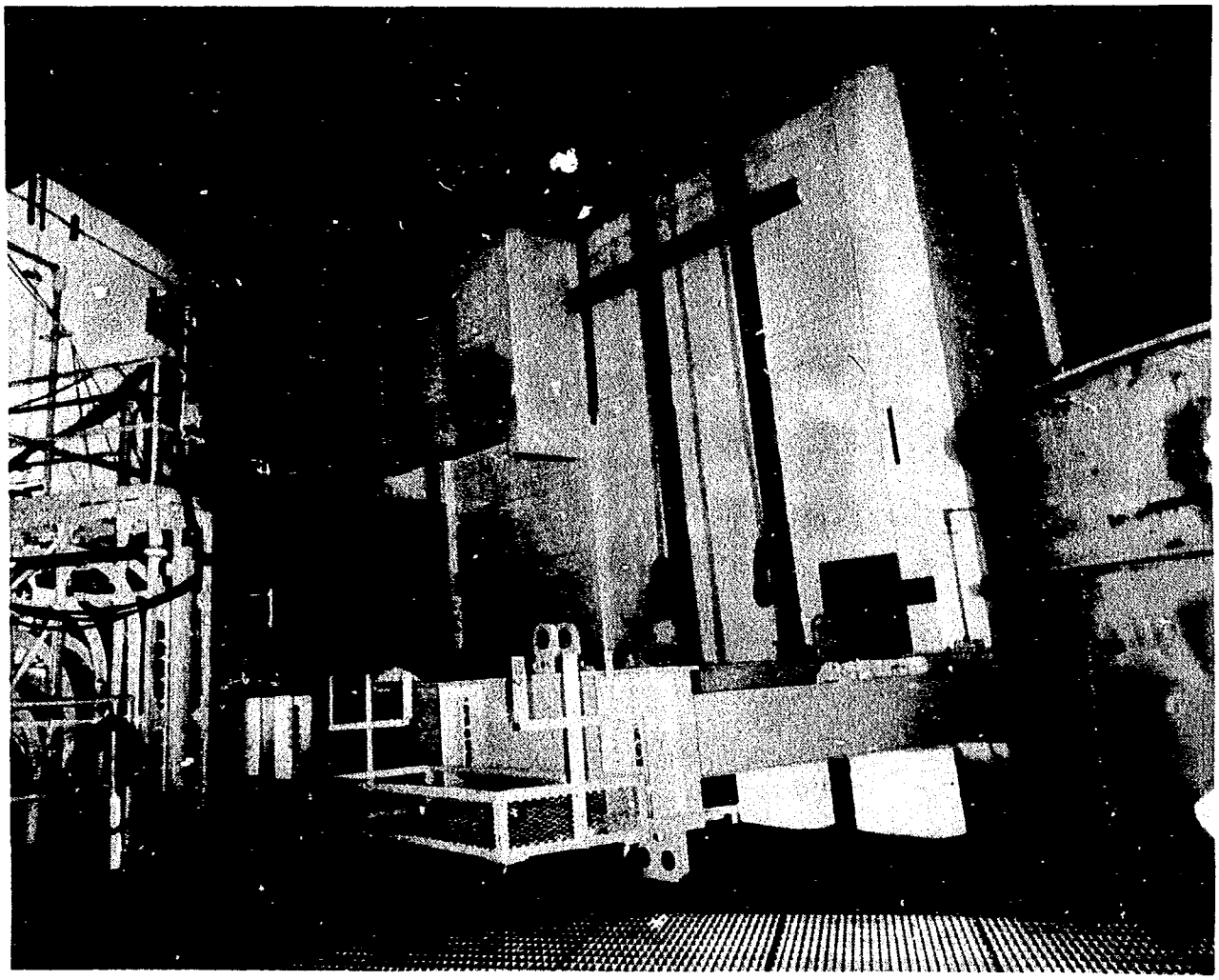

Figure 15. Polar crane lifting frame.

inspected, and subsequently rated at 1-1/2 tn—its original rating. This crane was used to place the sand columns around the head storage stand.

3.5.4 Reactor Vessel Head Lift Pendants Installation. New head lift pendants were purchased after the accident to replace the originals. The length of the pendants precluded load testing as part of the polar crane load test because of the limit on the lift height of the polar crane. The new pendants were certified by the vendor to the original Babcock & Wilcox specifications. The original pendants were removed from the reactor building and disposed of as radioactive waste in May 1984.

3.6 Reactor Vessel Studs

3.6.1 Cleaning. In May 1983, the reactor vessel studs were cleaned and lubricated. First, the studs were hydrolased to remove loosely adherent particles such as rust and boron crystals, and then the area was vacuumed to remove standing water. Oil of wintergreen was applied to preserve the threaded surface and to penetrate the nut/stud thread engagement. Prior to detensioning, the threads were cleaned with a wire brush and lubricated with Molycote (Figures 16 and 17).

3.6.2 First Pass Stud Detensioning. Reactor vessel stud detensioning requires that the tension on the studs be unloaded incrementally in two steps or passes. Normally, as soon as the first pass is complete, the second pass commences. In this case, the first pass was performed months in advance of the final pass to determine if any of the nuts were stuck. This allowed time to plan corrective action before the final detensioning, which was on the critical path to head removal.

In early March 1984, two stud tensioners, which had motorized engaging nut drive (MEND) units

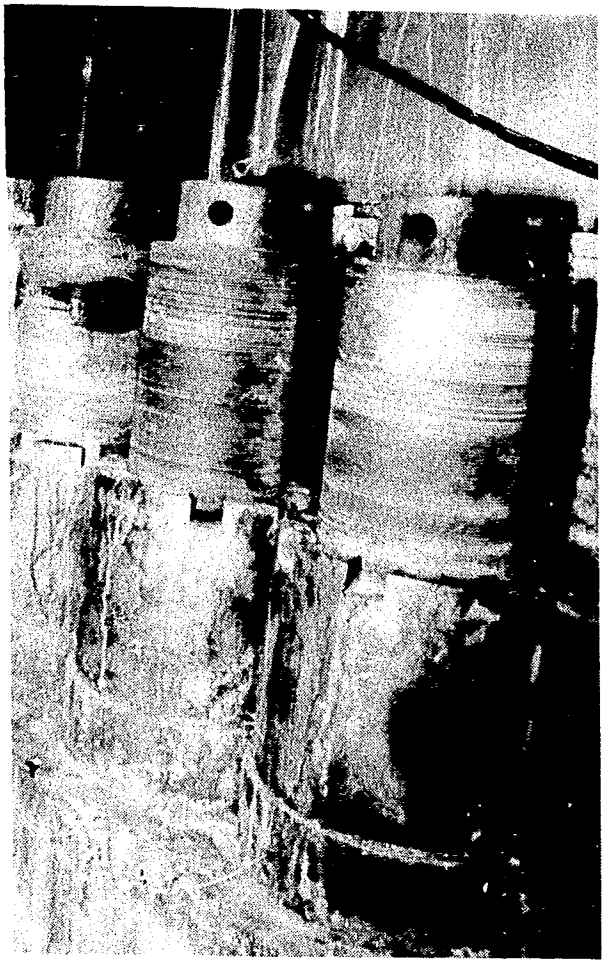

Figure 16. Reactor vessel studs before cleaning.

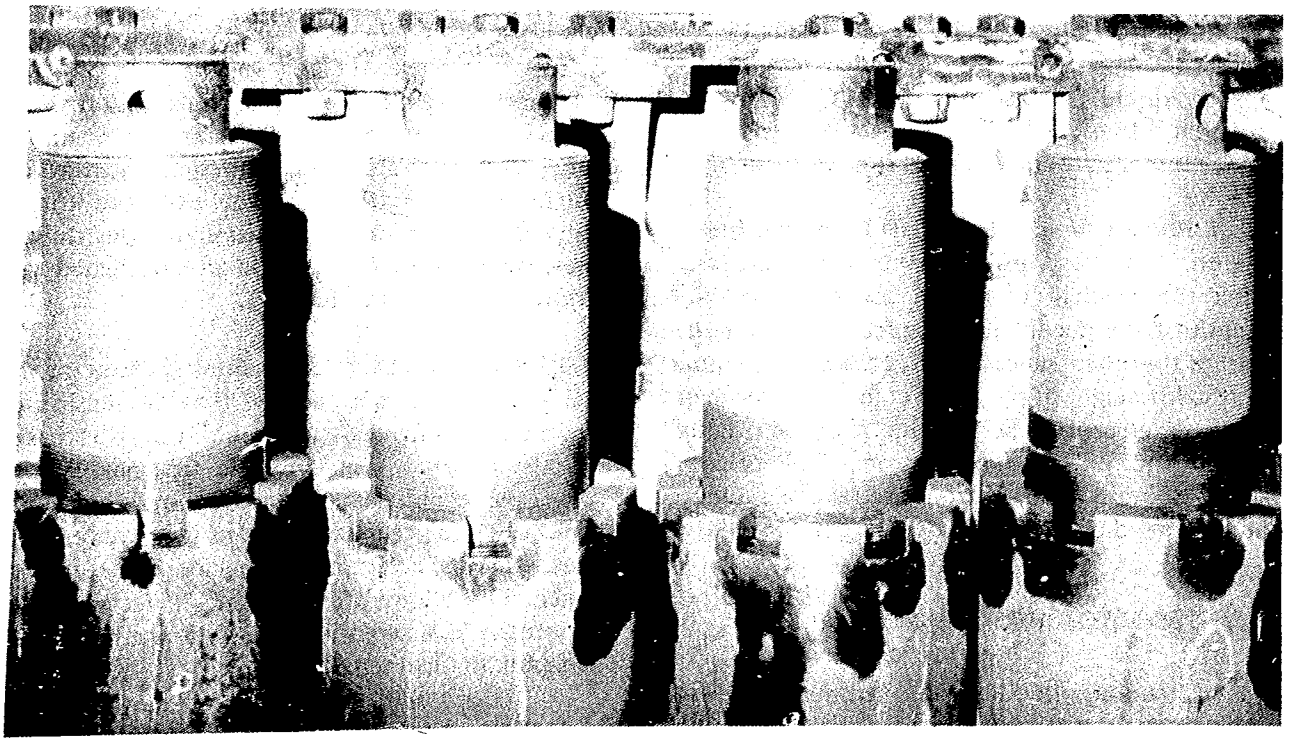

Figure 17. Cleaned and lubricated reactor vessel studs.

installed (Figure 18), were staged in the refueling canal. The MEND units appreciably reduced the time required for detensioning and reduced the radiation doses received by the workers. Stud cleaning, which removed rust and dirt remaining after the hydrolasing from the previous year, was accomplished using an air-operated rotary wire brush. Penetrating oil was applied to the threads in preparation for detensioning. Initial stud elongation measurements were taken using a depth micrometer to measure the distance between the top of an elongation rod and the recessed shoulder of the studs (Figure 19). The stud cleaning was performed in two entries. Initial detensioning efforts resulted in all of the 12 nuts tried remaining stuck. Work instructions were then changed to allow the use of slugging tools and penetrating oil to aid in breaking free the frozen nuts. After three additional entries, all 60 nuts were loosened to the first pass limits. Additionally, two studs at guide stud locations 15 and 45 were fully detensioned and parked on the head flange.

In May 1984, studs 15 and 45 were removed, corrosion inhibitor was placed in the stud holes, and flange hole covers were installed. In July, two newly designed and fabricated guide studs were installed in positions 15 and 45. The new guide studs are shorter than the original design and have a stepped diameter. The shorter stud length allowed the head to be raised to a minimal height before being moved laterally away from the vessel. The stepped diameter allowed more latitude in lowering the IIF to the reactor vessel.

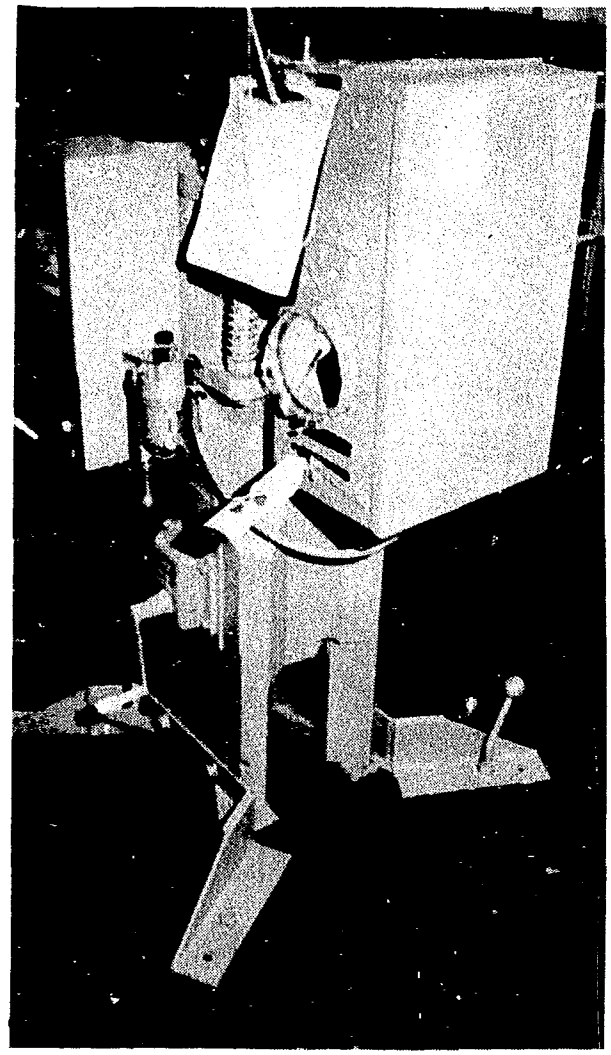

Figure 18. Motorized engaging nut drive (MEND) unit.

3.6.3 Final Pass Detensioning and Removal. Final pass detensioning was accomplished in two entries on June 27, 1984. As with the first pass detensioning, two tensioners were used. The work was accomplished in five hours with no problems. All nuts were struck with sledge hammers prior to the detensioning, as were the studs prior to removal, to loosen rust and other corrosion in thread areas inaccessible to the cleaning tools. Even with the preliminary steps taken to aid the detensioning, higher than normal force was required to turn the handcrank on the tensioners. However, pressure readings on the tensioners were as estimated, and no additional force was required to turn the nuts. Stud elongation measurements were taken the following day using the same depth micrometer that was used for the initial readings.

Attempts at manually rotating the studs began on June 28. The first day, the entry team tried to loosen 36 studs but was unsuccessful. Plans were then put into motion to apply impact force to the studs. A stud end protector was fabricated to prevent damage to the end of the stud when it was struck with sledge hammers. A combination of striking the studs vertically and using a slugging wrench battering ram and an air operated impact wrench loosened the studs so they could be rotated out of the flange. This method worked on all studs except number 6. After proof of principle testing on a mockup, stud 6 was chilled with liquid nitrogen poured into a vertical hole in the center of the stud. When the desired surface temperature was reached, the impact tools were used again and were successful at freeing the stud. Examination of the stud showed some rust on the threads but no galling or other degradation. After stud removal, the stud holes were cleaned, rust inhibitor was applied, seal plugs were installed, and plastic covers were placed in the reactor vessel flange holes.

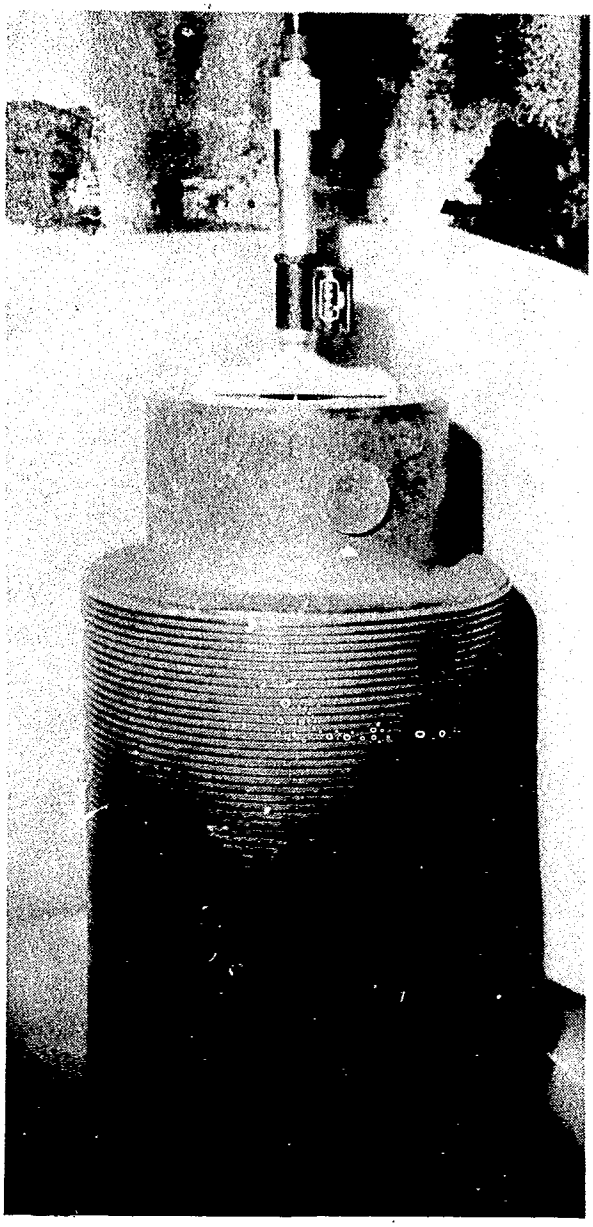

Figure 19. Stud elongation measuring tool (depth micrometer).

3.7 Contamination Control and Radiation Attenuation

The needs of radioactive contamination control and radiation attenuation were recognized early in the planning of the head lift activities. These measures were needed to lower the radiological exposure to the workers during head lift activities and to provide for long term control of the reactor building environment. The measures included service structure shielding, storage stand atmospheric enclosure, storage stand shielding, a contamination control boot, a shielded work area, and the plenum misting system.

3.7.1 Reactor Vessel Service Structure Shielding. In October 1983, four lead screws were trial parked (section 2.3.6). This action verified previous calculations that the dose rates around the service structure would be high when all of the lead screws were parked. To attenuate the radiation from the lead screws, 2 cm-thick lead blankets were installed around the service structure (Figure 20). The installed blankets contributed an extra 13 tn to the head, which would have caused it to exceed the lift capacity of the refurbished polar crane; however, the 60 reactor vessel closure studs (total weight 20 tn) were removed from the head and stored in racks to reduce the weight.

3.7.2 Reactor Head Storage Stand Atmospheric Enclosure. The storage stand enclosure consisted of two barriers that prevented movement of contaminants from the underside of the head to the reactor building atmosphere. The primary barrier was a reinforced plastic tarpaulin laid inside the storage stand circumference; it sealed against the head flange and was held in place by a wooden platform. The secondary barrier was a vertical skirt attached to the outer periphery of the storage stand. The skirt was taped to the stand at the top and bottom to provide a leak-tight enclosure (Figures 21 and 22).

3.7.3 Reactor Head Storage Stand Shielding. The primary purpose of the shielding around the head storage stand was to attenuate radiation emanating from the underside of the head. It also blocked radiation from the lower portion of the service structure that contains the 66 parked lead screws (Figure 22). The wall consists of 49 2.5 m fiberglass cylinders and 43 1.2 m fiberglass cylinders, each 0.6 m in diameter and stacked 3.6 m high. Each cylinder has a concave interlocking pattern for maximum shielding effect. Initially, these cylinders were filled with water; however, leaks occurred and the cylinders were filled with sand.

Twenty-three entries were required for installing, trouble shooting, and establishing the final configuration of the shield wall. The original plan specified only nine entries. The majority of the extra time was spent troubleshooting the leakage problem and replacing the water with sand. The sand increased the effectiveness of the shields by a factor of two compared to water, and the radiation levels in the vicinity around the storage stand actually decreased from their pre-head-lift values (section 5).

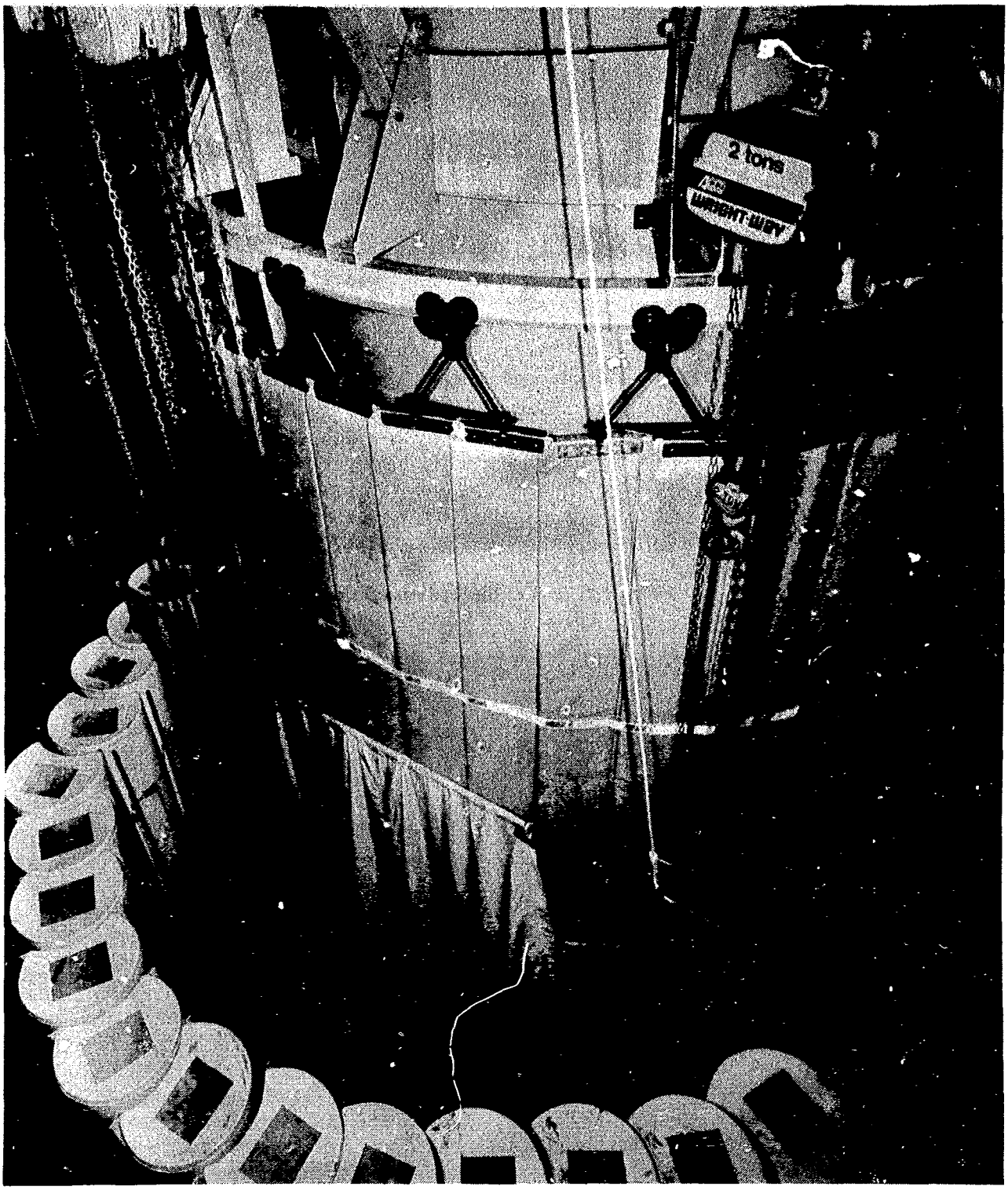

Figure 20. Service structure lead blanket shielding, head boot, and sand column shielding around storage stand.

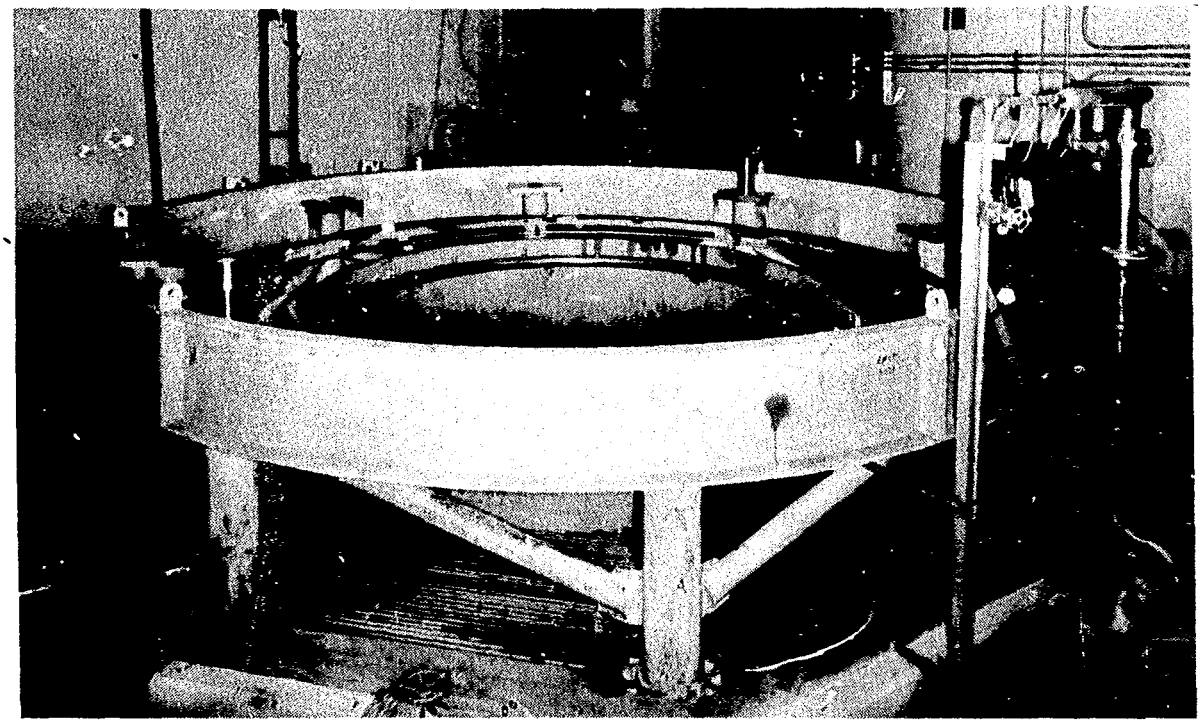

Figure 21. Reactor head storage stand.

Figure 22. Reactor head storage stand with atmospheric enclosures.

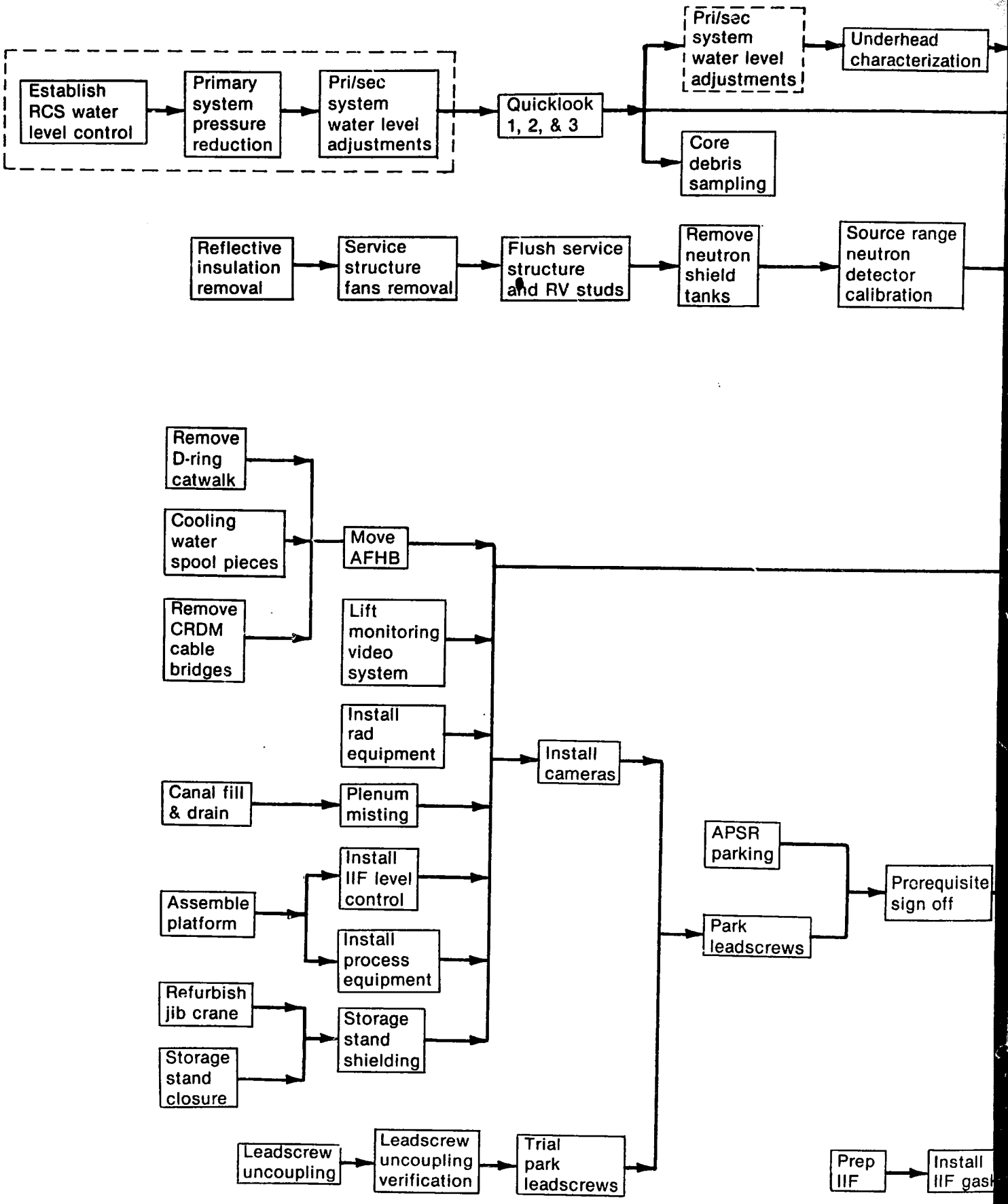
Establish RCS water level control
Primary system pressure reduction
Pri/sec system water level adjustments
Quicklook 1, 2, & 3
Pri/sec system water level adjustments
Underhead characterization
Core debris sampling
Reflective insulation removal
Service structure fans removal
Flush service structure and RV studs
Remove neutron shield tanks
Source range neutron detector calibration
Remove D-ring catwalk
Cooling water spool pieces
Remove CRDM cable bridges
Move AFHB
Lift monitoring video system
Install rad equipment
Install cameras
Canal fill & drain
Plenum misting
Install IIF level control
Assemble platform
Install process equipment
Refurbish jib crane
Storage stand closure
Storage stand shielding
APSR parking
Park leadscrews
Prorequisite sign off
Leadscrew uncoupling
Leadscrew uncoupling verification
Trial park leadscrews
Prep IIF
Install IIF gas

Figure 2. H

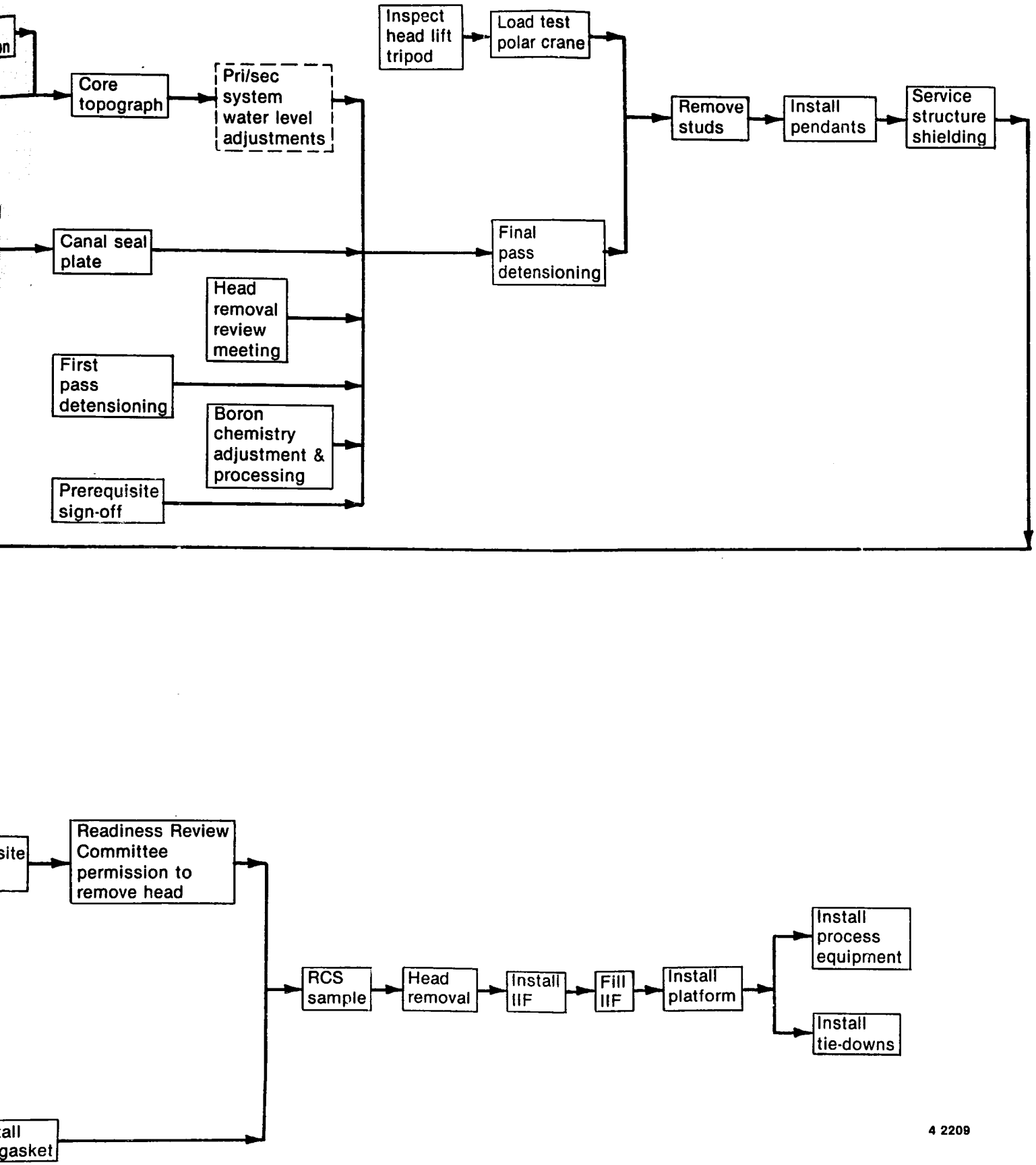

Head removal sequence.

3.7.4 Plenum Misting System. After head removal and prior to filling the IIF, the top surface of the plenum was exposed to the atmosphere. An increase of airborne radioactivity was possible when the exposed plenum surfaces began drying. To control this potential problem, a plenum misting system (Figure 23) was installed. If monitors had detected an increase in airborne radioactivity attributable to plenum contamination, a spray nozzle would have been positioned over the plenum and a mist of borated water would have been sprayed onto the plenum surface for as long as necessary.

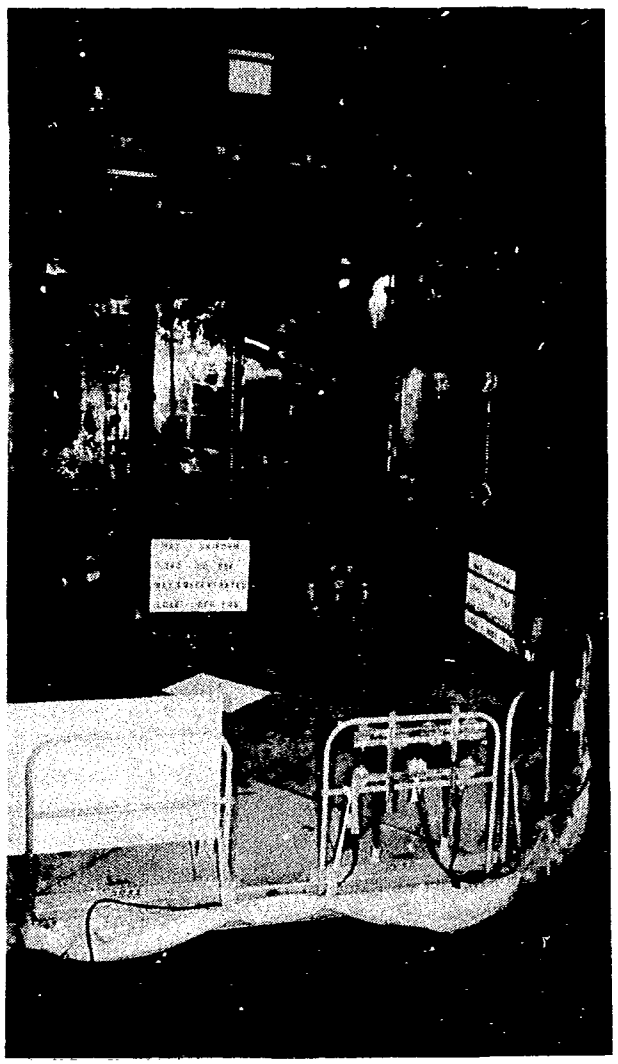

Figure 23. IIF platform, removable lead deck plates, and plenum misting system I-beam and vertical pipe.

The misting structure consisted of a horizontal steel beam that spanned the width of the refueling canal and a vertical pipe with a spray nozzle attached to the bottom. The steel beam rested on casters that rolled on the existing AFHB rails. The casters allowed the system to be remotely pulled into place by handling lines. Water from the BWST could have been piped to the nozzle via the fuel transfer canal fill system. The system was fabricated on-site and installed in one entry on July 18, 1984. Procedures were in place to operate the misting system; however, because of the short time between the lifting of the head and the placement of the IIF, the misting system was not used. It has been removed from above the reactor vessel to make room for the continuing plenum and fuel removal operations.

3.7.5 Contamination Control Assembly. The contamination control assembly (head boot) was designed to contain any contaminants or water that could have fallen from the underside of head during its transfer to the head storage stand. A camera inspection of the underside of the head during the lifting operation did not reveal any loose debris, but the boot was installed as a precaution. The boot (Figure 24) was a large plastic sheet drawn under the head as it cleared the control rod guide tubes. The sheet was drawn up against the underside of the head and secured by lines tied to the service structure.

3.7.6 Shielded Work Area. During the head lift operations, crew sizes ranged from two to nine people in the reactor building at one time and included radiation technicians, polar crane operators, and riggers. It was necessary to provide a low dose rate shielded work area where workers could monitor the closed circuit television (CCTV) system, operate remote equipment, and wait between operations. The shielded work area (Figure 14) was located on top of the pressurizer slab on the A D-ring. The head storage stand was adjacent to this area on the 347 ft elevation. Serpentine shielding, 2 m high and 2.5 cm thick, provided a work area where radiation levels were less than 50 mR/h above background throughout the head lift operation.

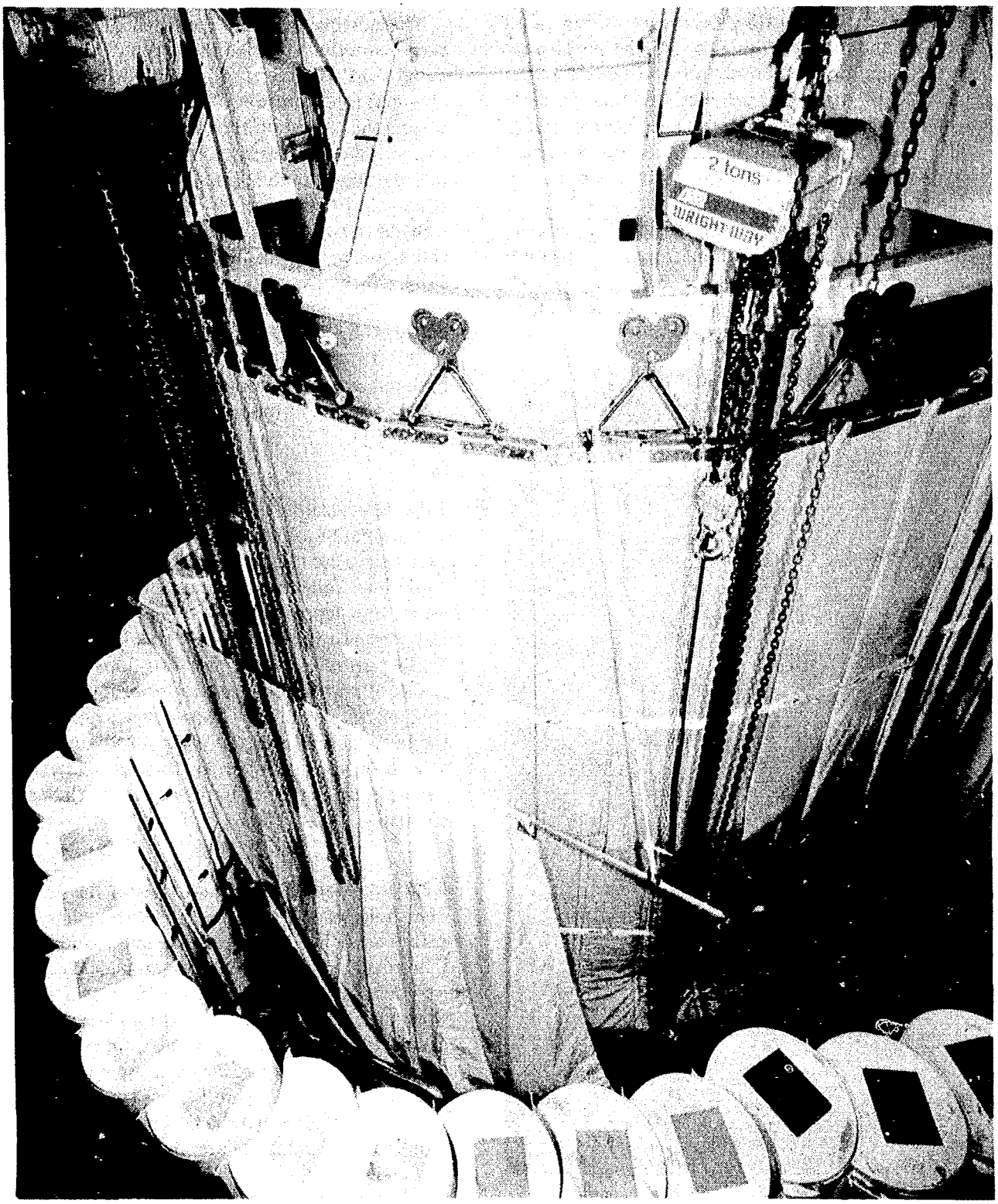

Figure 24. Installed contamination control assembly (head boot) tied to service structure.

3.8 Camera Installation/Lift Monitoring Video System

The head lift video monitoring system included 10 black and white cameras (six primary and four backup) and a control/monitoring station located in the shielded work station on top of the pressurizer missile shield. Five of the cameras, including the two backup cameras, were located on the refueling canal floor; they were used for reactor vessel head leveling operations and for inspecting the underside of the head for debris prior to installing the head boot.

Two of the primary cameras were mounted on the head flange. These cameras monitored head alignment over the guide studs in the vessel and were also used to align the head over the guide studs on the head storage stand. They were later transferred to a similar position on the IIF prior to its installation on the reactor vessel. The three remaining cameras were used for setting the head on the storage stand. Two backups were mounted on the storage stand, and the third primary was located on the polar crane to monitor targets used to position the trolley relative to the bridge and the bridge relative to the reactor building wall. The polar crane camera provided alignment for the head lift from the vessel, its landing on the storage stand, and the installation of the IIF on the vessel. Camera locations are shown in Figure 25.

Accurate alignment to within 6 cm of the centerline of the polar crane and the reactor vessel was necessary to minimize side loading of the modified guide studs on the reactor vessel flange and the keyway. The camera on the polar crane failed in the zoom mode before the head was lifted and a printed circuit board was replaced. The camera had undergone rigorous testing 12 hours prior to the malfunction. During the head lift operation, another monitoring problem arose when unmarked power cables to the radiation monitors were unplugged several times. The problem of loose connectors was solved by tie-wrapping the plugs to the receptacles. The cables to the two primary cameras on the head flange were severed during transfer of the head and the two backup cameras on the storage stand were used to lower the head onto the stand.

3.9 Internals Indexing Fixture Preparations

The IIF was modified for use during the recovery. This tool is normally used to guide the plenum and core support assembly during installation and removal. The existing IIF was modified to provide shielding and a work platform and to support future operations above the reactor vessel including IIF processing and RCS sample pump equipment. The modifications included a water-tight gasket, remote handling rigging equipment, tie-downs, smaller inside diameter guide bushings, and a platform cover made of removable panels.

Before placement in the reactor building, the IIF platform was used extensively for trial assembly and mockup training. The IIF was then disassembled and moved into the reactor building. The reassembly was complete when the platform handrail, IIF processing equipment, RCS sampling, and level control equipment were installed.

3.9.1 Modifications. A water-tight gasket system was designed to be installed on the IIF so that the weight of the IIF on the gasket would provide a leak-tight seal. The tie-downs, which clamp the IIF to the reactor vessel flange, were designed to hold the IIF in place when the plenum was lifted through it. Preparations for installation of the gasket and its hardstop spacers included cleaning the IIF flange with methyl alcohol and fabricating a plexiglass guide to ensure that the gasket was installed in the correct position.

The projected high radiation levels in the refueling canal required a plan to install the IIF remotely. One of the two bushings was modified (made oval inside) to provide sufficient clearance for a worst-case tolerance stackup from differential thermal expansion of the IIF and the reactor vessel flange. Another change was to the guide studs on the reactor vessel flange. The new studs were smaller in diameter to mate with the new guide bushings and were shorter (approximately 35 cm above the flange for the new studs vs. 100 cm for the original studs) to reduce the height the head was lifted before being moved laterally away from the vessel. The smaller diameter studs in the normal diameter

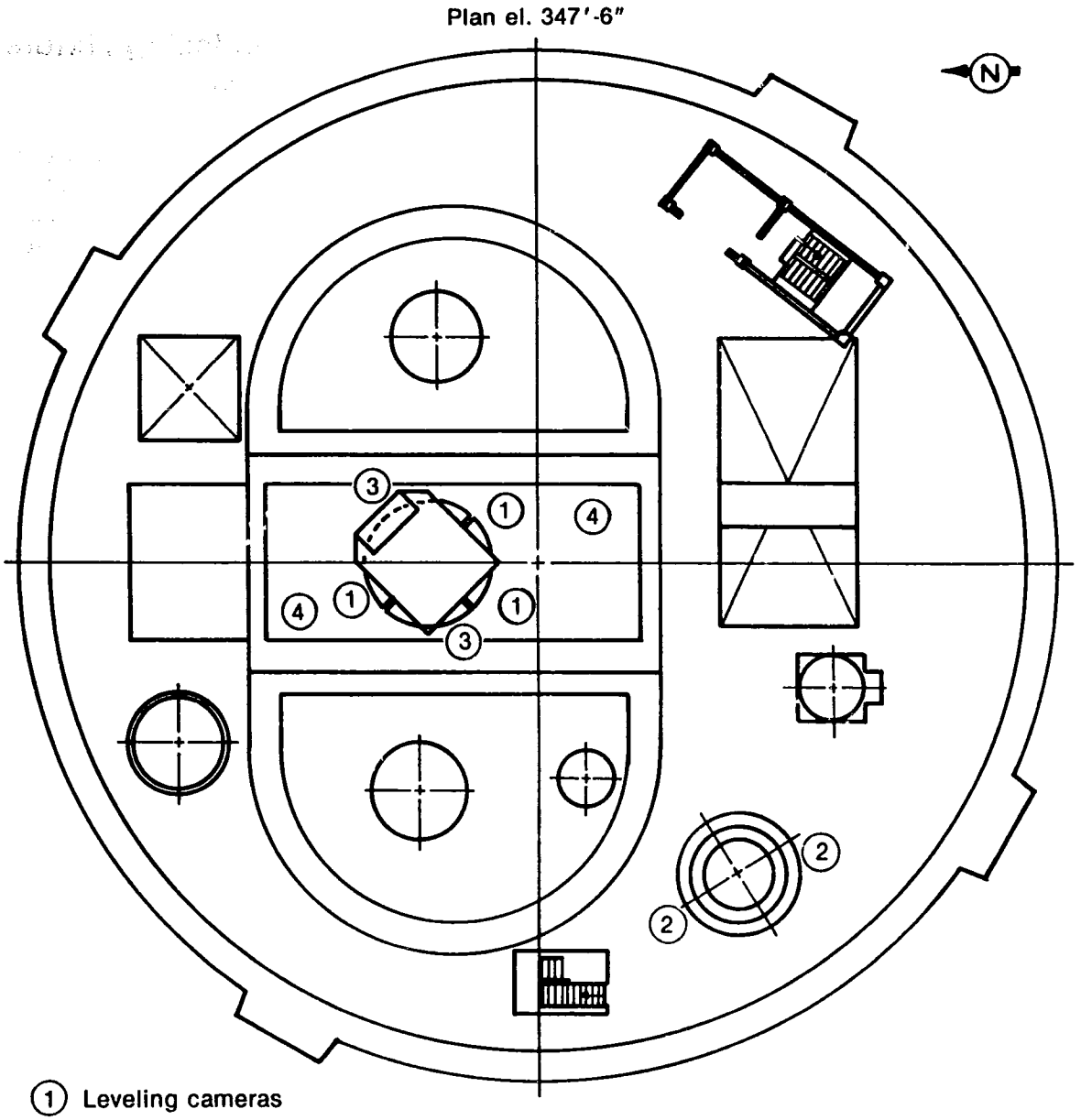

(1) Leveling cameras

(2) Head storage stand cameras

(3) Stud alignment cameras (relocated to IIF after head set on storage stand)

(4) Leveling backup cameras

(5) Camera on polar crane for lift targets (not shown)

4 2207

Figure 25. Camera locations for head removal.

flange holes of the reactor vessel head also provided greater latitude in the level requirements for the head lift. The new guide studs had two different diameters: a smaller diameter at the top to provide a lead-in with the IIF bushings and a larger diameter at the bottom to provide a close-tolerance fit as the IIF was moved closer to the vessel flange.

3.9.2 Remote Handling. Unrigging the IIF from the tripod was planned as a remote operation because of the projected radiation levels. The unlatching mechanisms were designed and fabricated on-site and then fit-tested on the IIF in the reactor building. The fit test revealed that one of the ball pendant sockets on the IIF was not fabricated in accordance with the vendor drawings. One of the unlatching mechanisms was modified to fit the as-built socket. To use the unlatching mechanisms, they were first attached to the lifting pendant and then to the IIF after the pendants were engaged to the ball sockets on the IIF. To release the pendants from the IIF, the tripod was lowered so that the pendant balls would be below the sockets on the IIF. The unlatching mechanisms were actuated with tag lines to move the pendants away from the IIF. When all three mechanisms were actuated, the rigging was raised by the polar crane.

3.9.3 Platform, Processing, RCS Sampling, and Level Control. The IIF work platform is a structural steel frame with lead-shielded, removable deck plates (Figure 26). The platform rests on the IIF but it is not fastened to the IIF. The platform serves as a mounting point for components of the IIF processing system and the RCS sampling system. The removable deck plates are shielding and also provide access to the internals of the reactor vessel.

The IIF processing system was designed and installed so that the RCS water processing rate would not be less than the rate achieved with the RCS pressurized. The IIF processing system consists of a suction pipe, a pump, and a discharge line. The suction line and pump are attached to the IIF upper flange; the suction pipe extends below the top of the IIF. The discharge line connects to a manifold which feeds water to the SDS processing equipment. The IIF processing system permitted the RCS to be continually processed without letdown. The previous RCS processing method required the RCS to be letdown in one step then processed in a second step. The processing rate through the IIF processing system was 1 L/s.

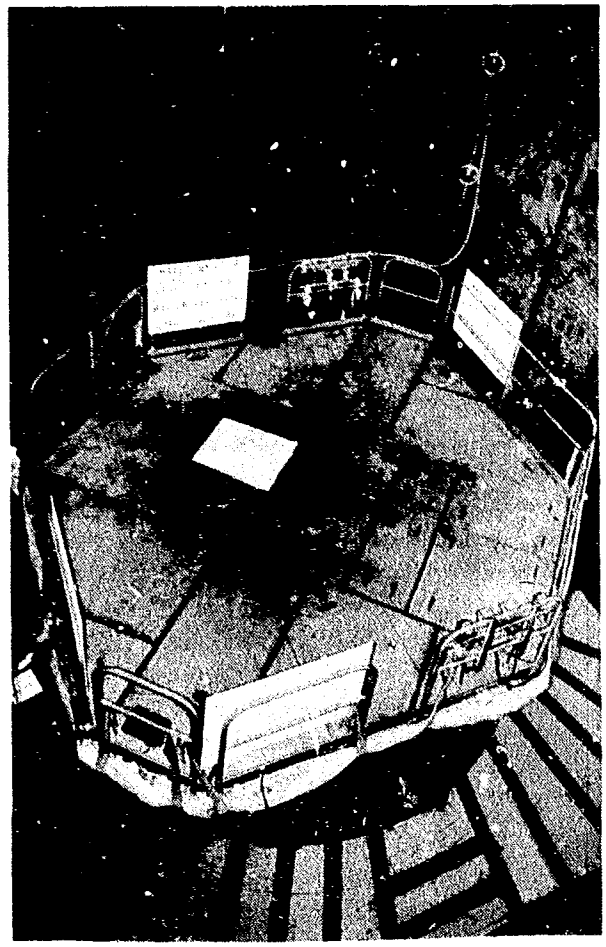

Figure 26. IIF installed on reactor vessel flange.

The RCS sampling system installed on the IIF platform permitted samples to be taken from outside the reactor building without operating the IIF processing system. The level control on the IIF is a bubbler type which provided indication to the control and alarms in the control room if the IIF level was outside the control band. The RCS sampling system consists of a pump, a suction line into the IIF, and a discharge which connected to a sample sink outside the reactor building.

4. HEAD REMOVAL

4.1 Operation

On July 23, 1984 the head lift sequence began. The Dillon load cell, the internals handling extension, the tripod, and the turnbuckles were attached to the polar crane main hook with cheek plates (Figure 27). The Dillon load cell should have been zeroed before the rigging was attached. Because the breakaway margin (the difference between the weight of the head and the polar crane maximum lift load) was small and the weight of the rigging was unknown, it was decided that zeroing the load cell by calculating the rigging weights was not accurate enough. Therefore, the internals handling extension, the tripod, and the turnbuckles were removed, the Dillon zeroed, and the rigging reattached. Next, the polar crane moved the tripod over the centerline of the head service structure. Precise positioning was determined by remote targets monitored by a video camera. The three lifting pendants, which had been installed on the head prior to parking the shim drive lead screws, were then attached to the rigging.

The next step was to lift and level the head, which occurred on July 24. Three height gages had been attached to the head flange in-line and below the lifting lugs. These gages were monitored by the CCTV system. When any two gages reached a difference of slightly more than 6 mm, the head was lowered and the turnbuckles adjusted to achieve a level lift. Four leveling iterations occurred before the criteria were satisfied, and then the head was lifted to a height of 105 cm. Video cameras scanned the underside of the head for any hanging debris. Then, the contamination control boot assembly (Figure 28) was installed by guiding it under the elevated head via four handling lines, drawing it up against the head flange, and securing it by tying the handling lines to the service structure handrails.

The head was traversed to the south end of the refueling canal and lifted to the 357 ft elevation to clear a decay heat line running between the two D-rings. It was then transferred to the south end of the reactor building. The head was then raised an additional 90 cm to clear the top of the fiberglass cylinders surrounding the head storage stand. The polar crane bridge rotated and positioned the head over the storage stand, and elevation measuring devices were used to ensure that the head would clear the decay heat line and the head storage stand shielding. While the head was in transit (Figure 29), personnel remained within the confines of the shielded work station (Figure 14). Remote surveys were performed

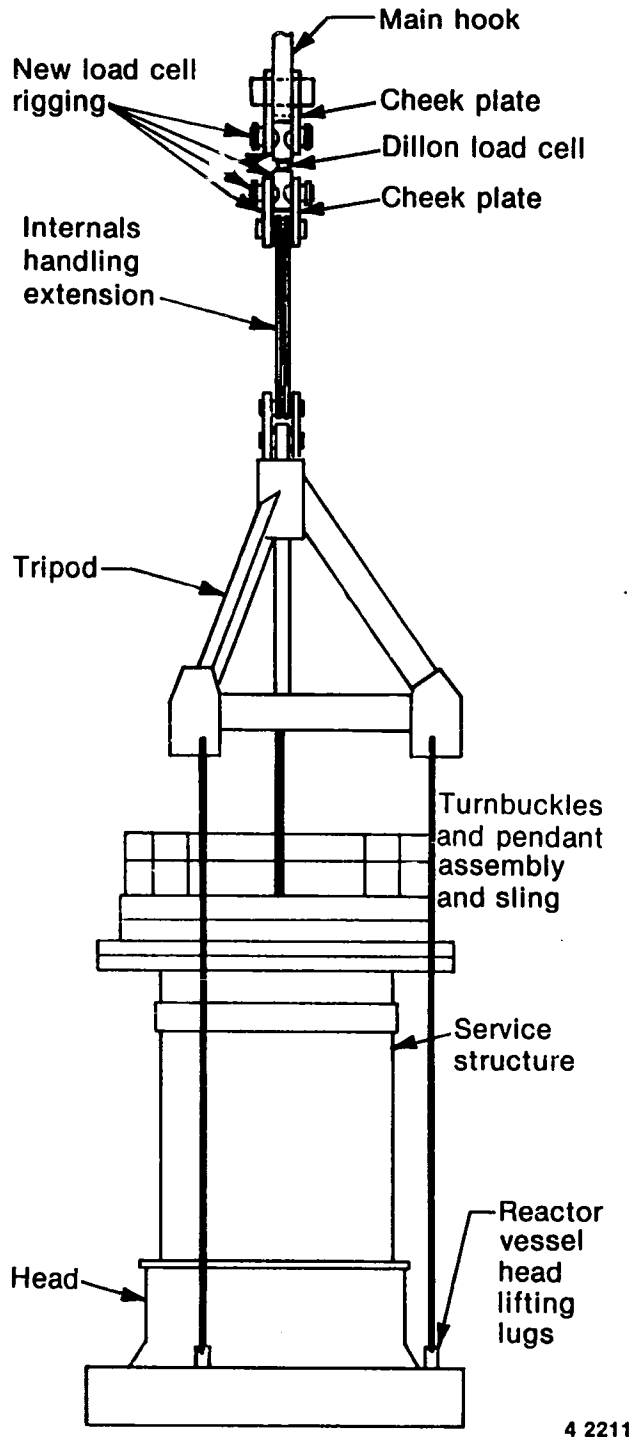

Figure 27. Polar crane rigging for head removal.

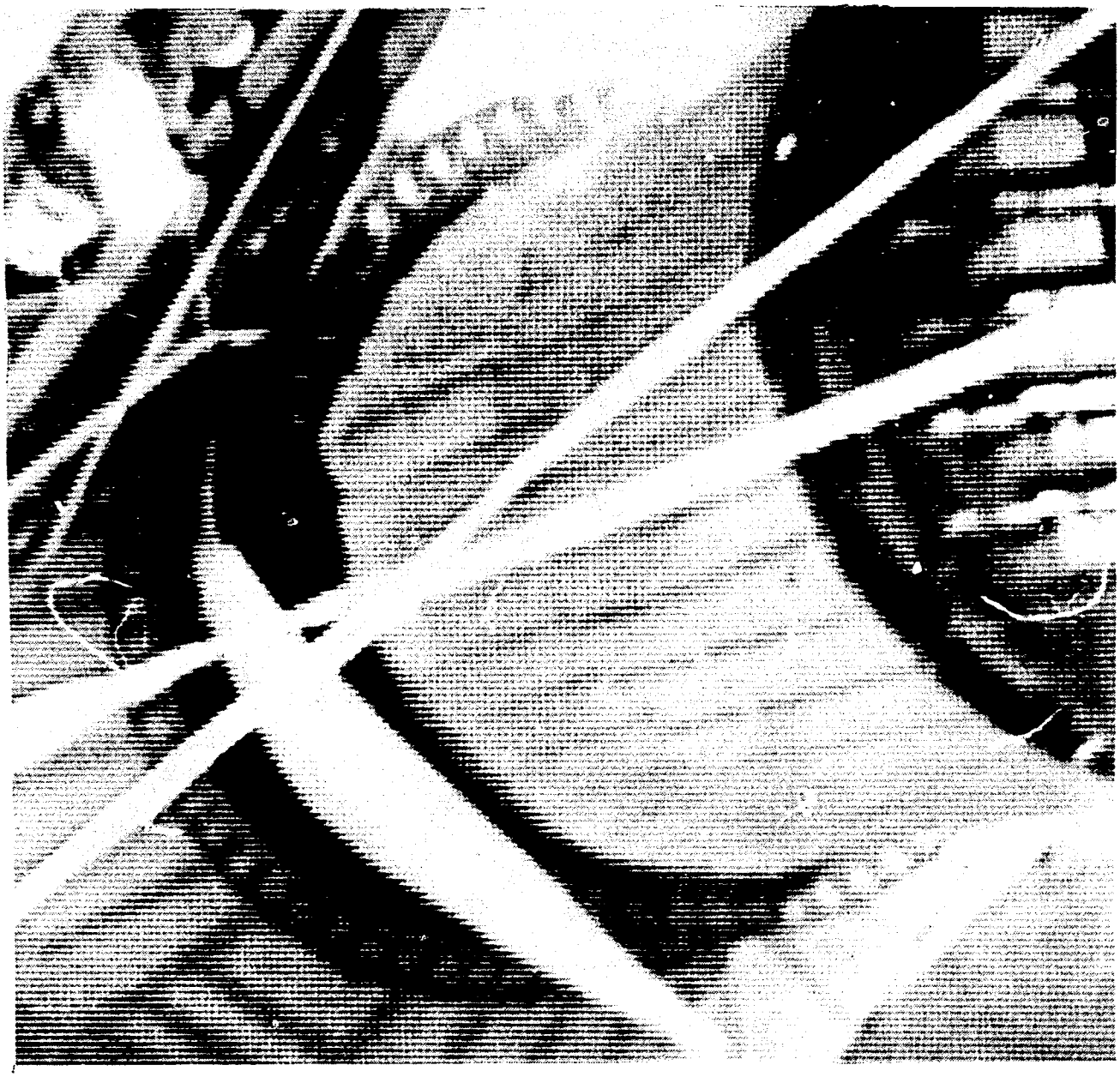

Figure 28. Contamination control assembly installation.

in the work areas, and the reactor building health physics technician approved each task as the workers left the station. In all instances when the plenum was exposed, workers moving on the 367 ft and 347 ft elevations remained far enough back from the edges of the D-rings and refueling canal to be shielded by the shadow effect of the walls.

During the transfer of the head to the south end of the refueling canal, the CCTV cables to the two cameras on the head flange were severed. This loss complicated the positioning of the head on the storage stand because the guide pins could not be observed from the head flange vantage point. Instead, the two backup cameras mounted on the head storage stand were used to monitor the landing of the head on the storage stand.

While lowering the head onto the storage stand, the video cameras showed that stud hole 15 was aligned with the storage stand guide stud, but stud 45 was one hole short of proper alignment (a problem with alignment of the head storage stand had been reported during head lift operations prior to the 1979 accident). Preparations to correct alignment of the head with the storage stand included installing new bumper stops for the polar crane trolley to allow its centerline to travel to the centerline of the storage stand, and

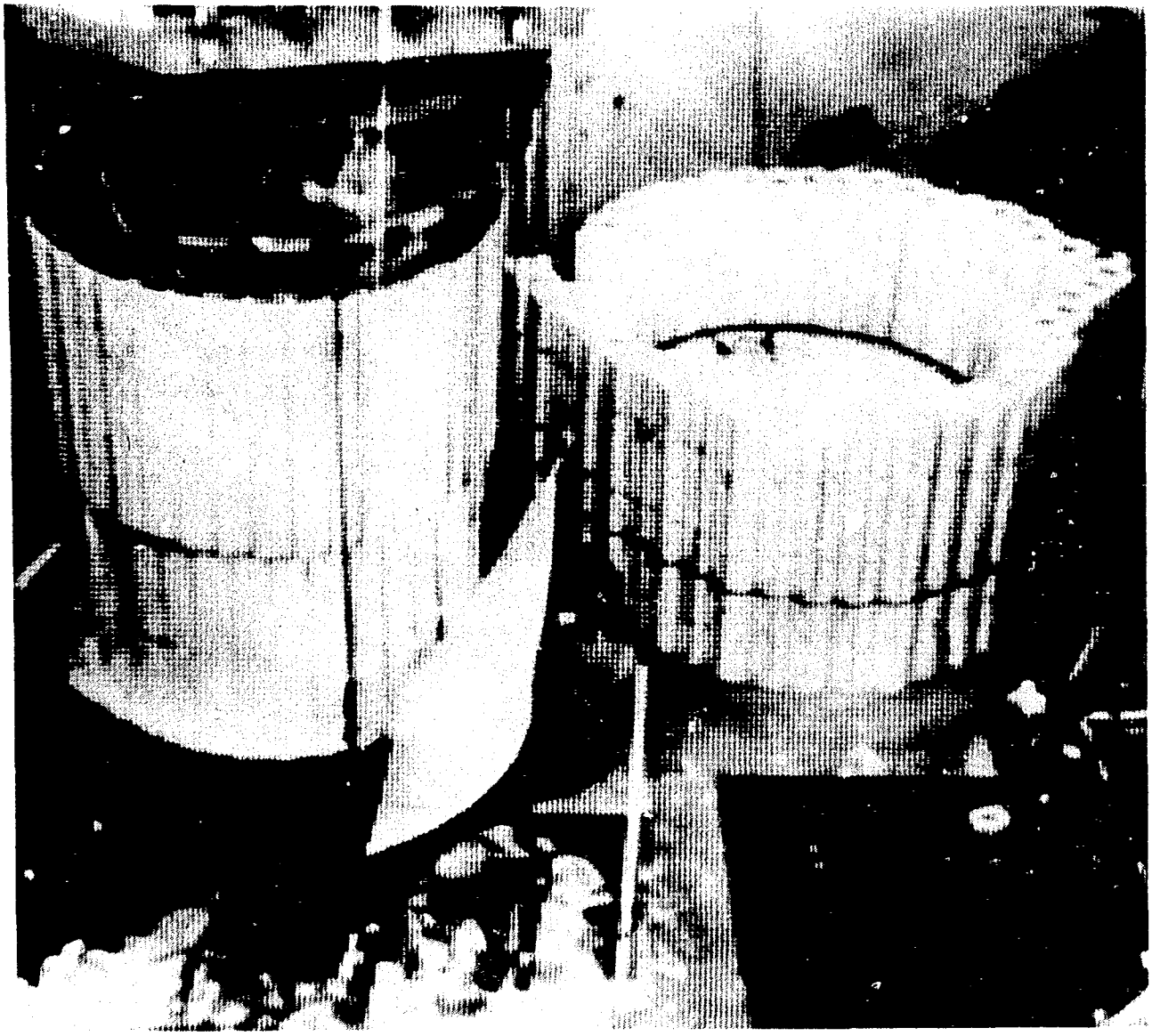

Figure 29. Head approaching its storage stand.

pre-setting the two centerlines using a plumb bob to set the alignment targets from the main hook. When the head could not be positioned, a scaffold was erected alongside the storage stand shield wall to enable workers to gain access to the head flange. A combination of pry bars and a come-along rotated the head into position. A sleeve was lowered through stud hole 15 to capture a guide stud and provide a pivot point. The nature of the misalignment problem suggests that the center of gravity of the load shifted away from the centerline of the lift. To provide personnel access, a catwalk was installed from the A D-ring near the control station to the service structure. The head was set on the storage stand at noon on July 25 (Figure 30).

To remove the pins connecting the lifting pendants to the turnbuckles and tripod, the head lift procedure required the load on the pendants to be slackened by the polar crane. However, at this point in the operation, the polar crane ceased to operate in the down mode. A repair crew climbed to the polar crane bridge control cabinet to locate the problem and correct it. The problem was traced to the pendant control unit which had been installed as a new item during the refurbishment work. The tripod was unrigged from the head and moved clear of the storage stand.

4.2 IIF Installation

Installation of the IIF followed (Figure 31). The cameras, which had been attached to the head flange for storage stand guide stud alignment, were

Figure 30. Head lowered onto storage stand.

removed and installed on the IIF on the two guide studs. The IIF was rigged to the tripod, leveled, and then centered over the reactor vessel with the aid of the alignment target monitored by the camera on the polar crane. The IIF was positioned over the two guide studs on the reactor vessel flange using the two cameras on the IIF and two tag lines attached to the tripod and maneuvered by workers on the 347 ft elevation. The IIF was placed on the reactor vessel the morning of July 27 (Figure 32).

After the IIF was set in place on the reactor vessel flange, water from an RCBT was pumped to the RCS from a waste transfer pump through the high pressure injection lines to the reactor vessel cold leg. A moderate flowrate of 2.5 L/s was selected to fill the IIF in a short period of time (four hours) without disturbing the rubble bed. The IIF was filled to the 327 feet-6 in. elevation (1.5 m above the reactor vessel flange). Video cameras were used to monitor the filling and scan the flange area for leaks. No leaks were observed. Radiation readings taken 60 cm from the IIF after head removal were much lower than anticipated (360 mR/h forecast v. the actual 60 to 120 mR/h).

Later the same day, the IIF platform was installed on the IIF (Figures 33 and 34). A special lifting rig had been designed and fabricated to lift the IIF platform. The polar crane targets were again monitored to center the platform over the IIF. A mechanical alignment aid was used for setting the platform on the IIF. During the installation, the polar crane main hoist ceased to function when the platform was 2.5 cm from being seated. The platform was lowered the final distance by rotating the turnbuckles of the rigging assembly manually.

The IIF tie-downs were installed next. These clamps hold the IIF in position on the reactor vessel when the plenum is lifted through it. Provisions were made to install the tie-downs from the IIF

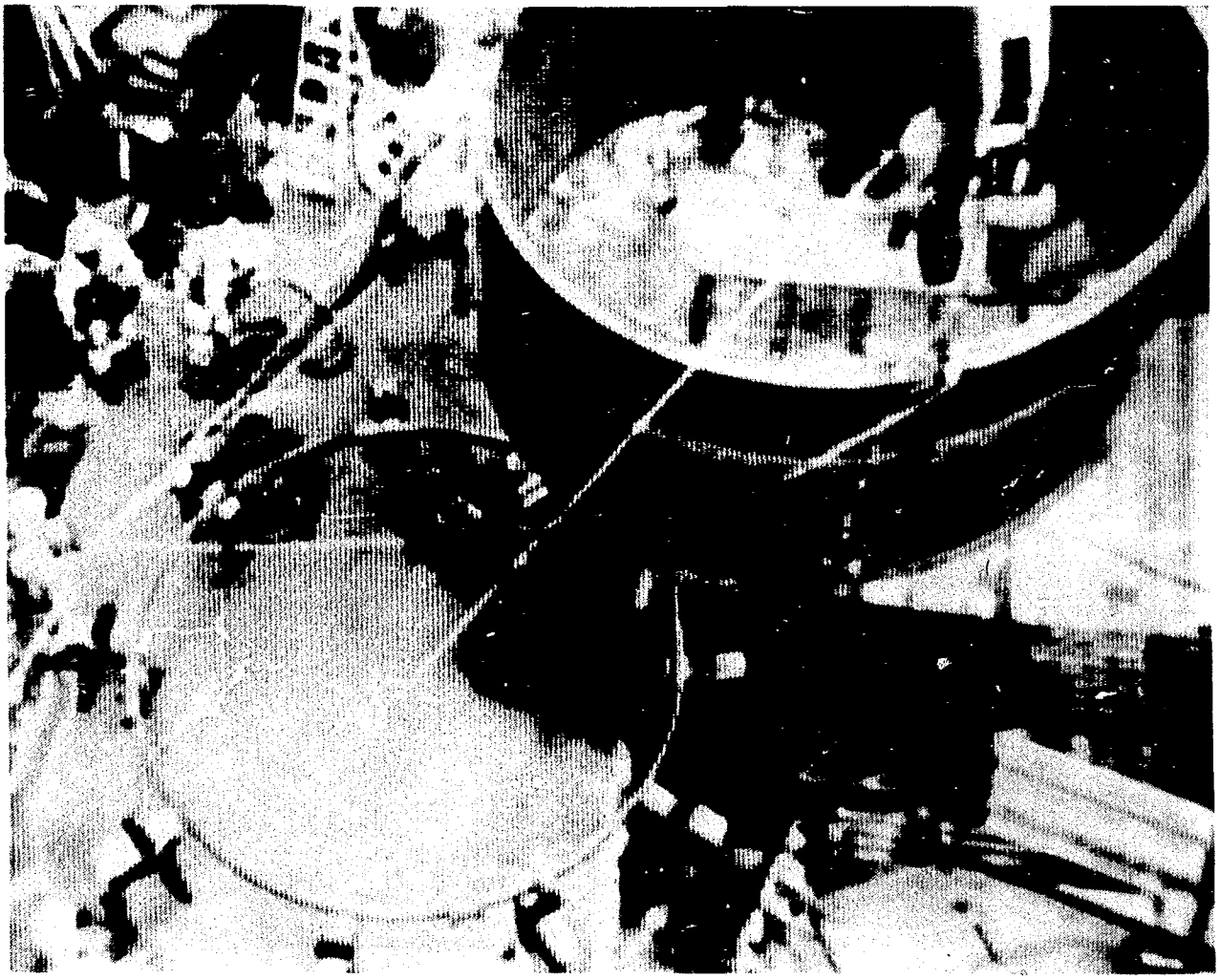

Figure 31. IIF lifted off of the 347 ft elevation to the reactor vessel.

platform, but the low radiation levels in the canal adjacent to the IIF permitted more direct access from the canal floor.

Table 1 shows the dates and times for key events during the head lift evaluations. The initial step in the sequence, lift and level, started on July 24. The last event, lowering the IIF platform on the IIF, was completed on July 27; the full sequence lasted approximately 54 hours. The crew sizes in the reactor building varied between three and four people. The total hours for the sequence was 341. The crafts worked 12 hour shifts; each shift had two crews. Each of the crews was trained and capable of performing each task. Instrumentation and control (I&C) technicians were available on both shifts to perform maintenance and provide trouble shooting for failed equipment. Personnel who reviewed and approved head lift documents were available in the Coordination Center throughout the head lift sequence to provide rapid turnaround of work instruction changes.

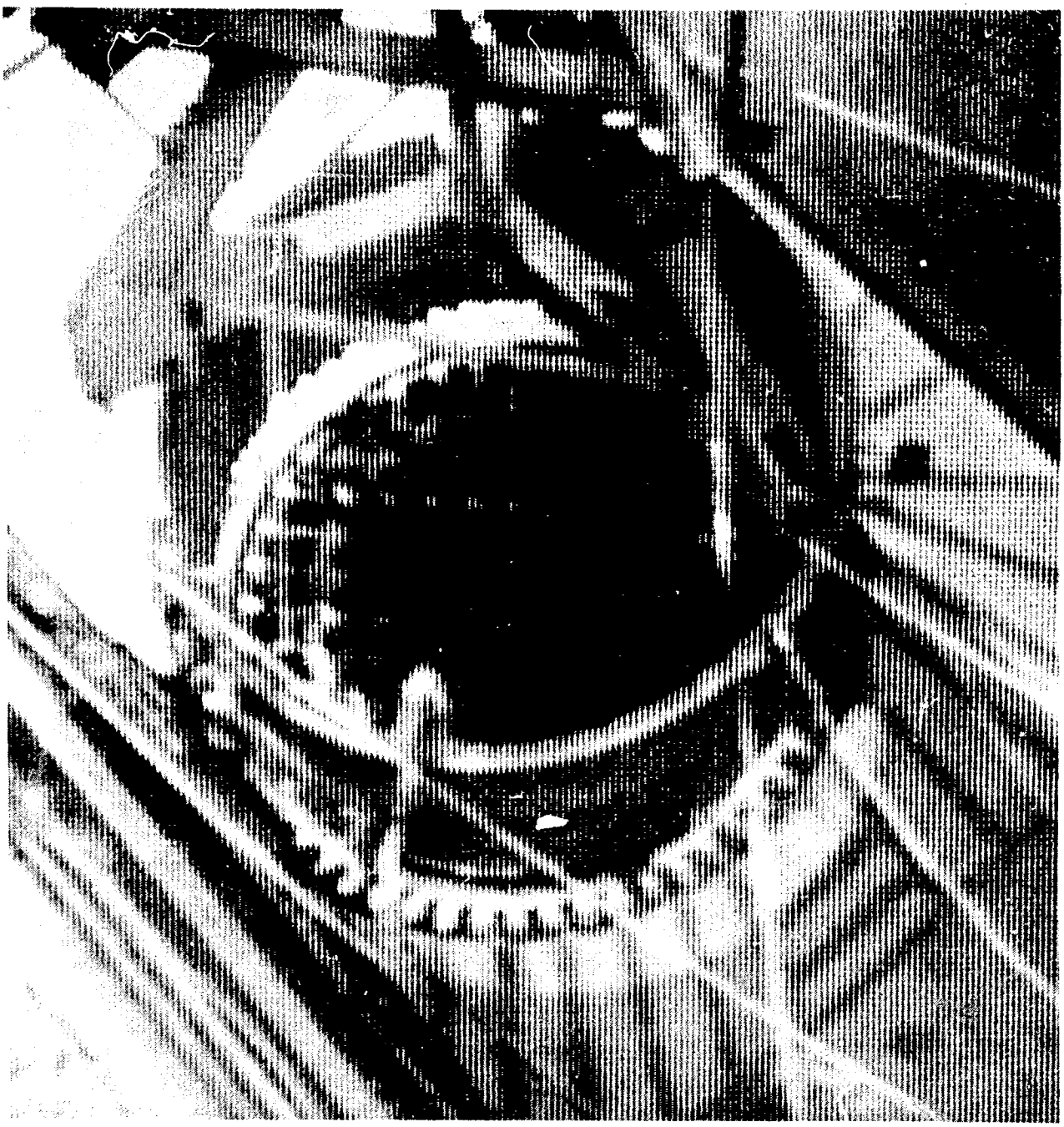

Figure 32. IIF lowered onto the reactor vessel flange.

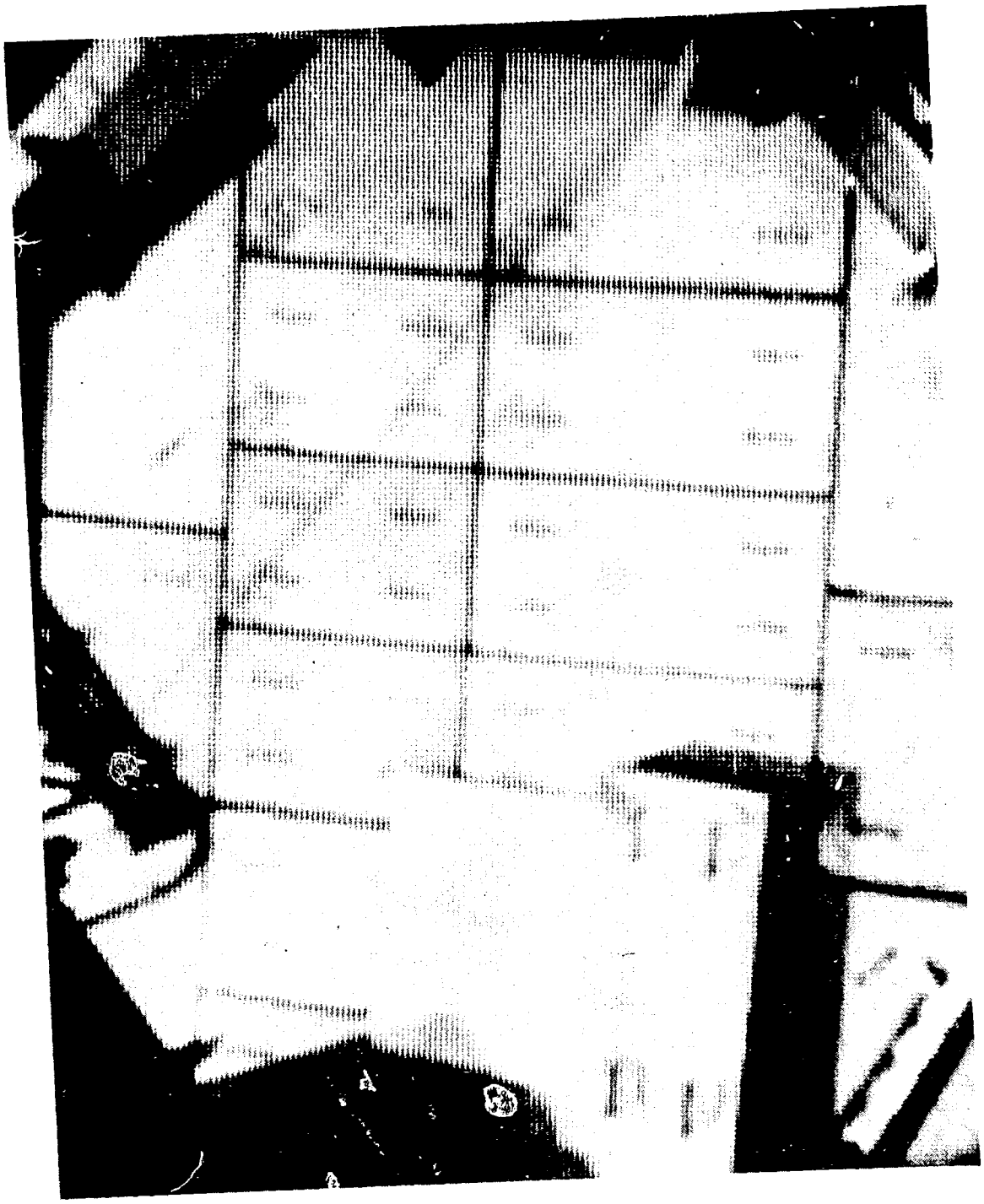

Figure 33. IIF work platform with removable lead plate shielding.

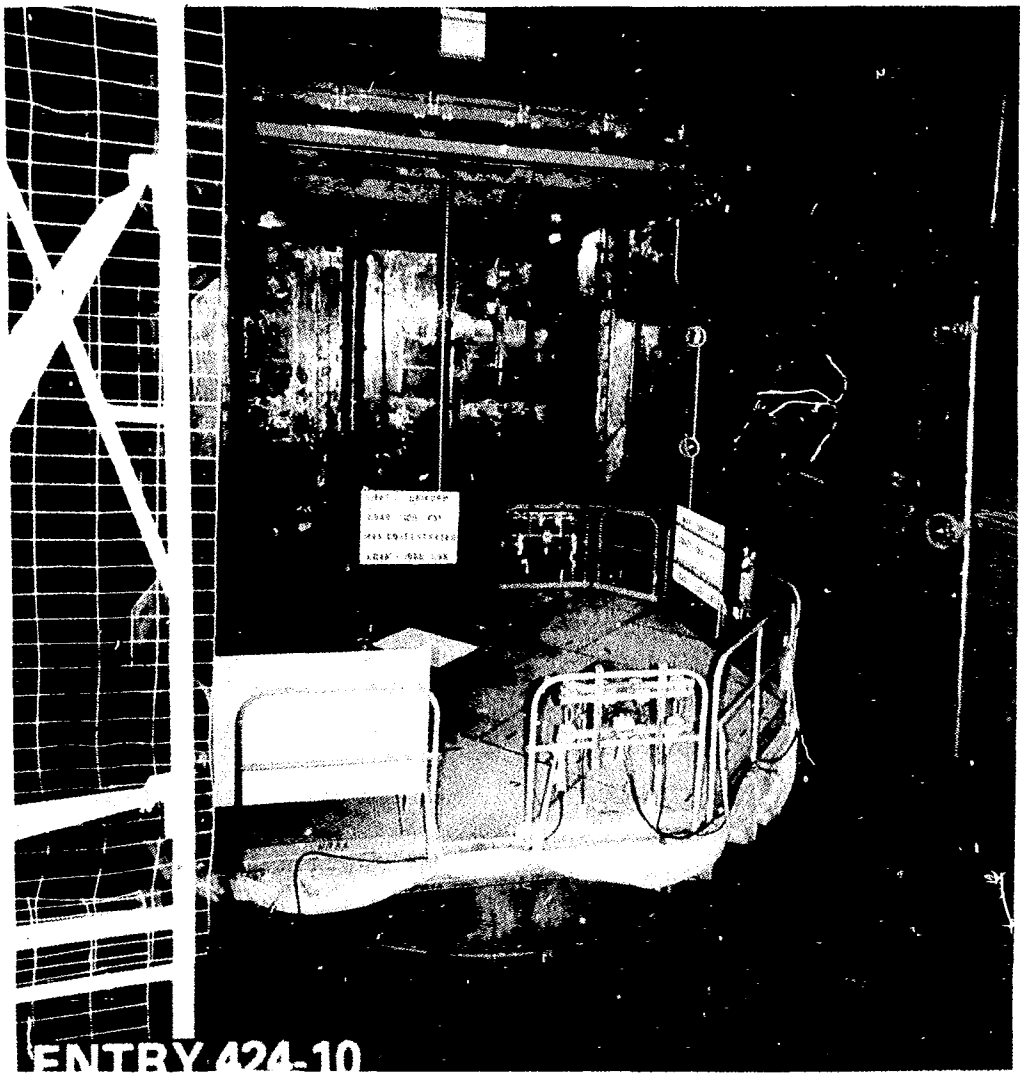

Figure 34. IIF after installation of platform and level control.

Table 1. Head lift sequence

Day and Date	Time	Operation
Monday, July 23	2130	Purge secured (initiation of R093)
Tuesday, July 24	0600	Tripod rigged to Dillon to polar crane
	0830	Tripod rigged to head
		Repair of camera 4 and flush of canal fill system
	1825	Lift and level started
	2000	Head leveled
	2220	Head at 90 cm and diaper installed
	2300	Head above storage stand
		Sleeve and come-along plan implemented
Wednesday, July 25	1215	Head on storage stand
	1220	Purge started
		Polar crane failure at pendant switch repaired
		Polar crane unrigged from head
Thursday, July 26	0552	Purge secured (start of IIF rigging)
	0830	IIF rigged and moving
	0930	IIF on reactor vessel
	0932	Purge started
	1330	IIF filled to 1.5 m
	1545	Purge secured—IIF platform rigging commenced
	1600	IIF platform 2.5 cm above reactor vessel
Friday, July 27	0006	IIF platform landed
	0100	Purge started

5. POST-OPERATION EVALUATIONS

5.1 Radiological Engineering

This section summarizes the forecast manhours and exposures for the head lift task. It also discusses the radiation levels in the reactor building and how they changed as a result of decontamination and head lift activities.

5.1.1 Head Removal Exposure Evaluation. The exposures for the head removal evolution were estimated in two documents: the Head Removal Safety Evaluation Report (SER) and the Environmental Impact Statement, NUREG-0683, March 1981.

The SER assumed the operation would require 2560 manhours at a mean dose rate of 191 mR/h, which equals 488 rem. It was also assumed that radiological controls personnel would account for an additional 20% of exposure through required support activities. The total estimated exposure for head lift was 586 rem, with an assumed uncertainty of 30%, i.e., a range of 410 to 762 rem.

NUREG-0683 assumed a manhour range of 1100-11,700 with an average dose rate of 10 mR/h. This yields an exposure range of 11-117 rem.

The actual exposure and manhours for the head lift evolution are shown in Table 2. The exposure values were obtained using the self-reader values recorded on the radiation work permits. The manhours shown are estimates from the radiation work permits and are therefore greater than the actual hours spent in the reactor building. The actual hours in the reactor building are about 60% of the hours allowed by the radiation work permit.

The support activity hours are also summarized on the table and include radiological controls support, anteroom (staging area for entries), and airlock personnel. The majority of the support activity exposures were incurred by radiological controls personnel, while the majority of manhours is a result of Subcontractor anteroom and airlock support personnel. The anteroom and airlock personnel provided access control to and from the reactor building, assisted in the staging of equipment taken into the reactor building, and helped personnel undress as they exited the reactor building. They were also trained to respond to personnel emergencies within the reactor building and the anteroom.

5.1.2 Head Removal Radiation Level Evaluation. The radiation profile for the reactor building is a complex combination of radiation source terms that vary significantly in geometry and intensity. The more prominent of these source terms have been brought under control by dose reduction and exposure management programs.

Radiation surveys were useful in evaluating the in-process and short term effectiveness of dose reduction activities. Management activities, however, are the best overall method of assessing long term performance of exposures received per hour spent in a given area or zone. This method of evaluation gives rise to the term "mean exposure/manhour." The table below depicts mean exposure/manhour for both major work elevations of the reactor building from 1980 to date.

	Elevation	
Time Period	305 ft	347 ft
Initial entries (fall 1980)	0.430	0.240
Pre-decon experiment (fall 1981)	0.390	0.200
Post decon experiment (sum 1982)	0.360	0.150
Pre-LOE decon (fall 1982)	0.350	0.146
Pre-dose reduction (early 1983)	0.350	0.117
Summer 1983	0.140	0.106
Fall 1983	0.145	0.078
Summer 1984	0.109	0.072

(LOE—Level of effort)

Historically, routine reactor building activities typically involve a 5% occupancy of the 305 ft elevation and a 95% occupancy of the 347 ft elevation. By applying these values to the current mean exposure/manhour values, a reactor building mean exposure/manhour value can be calculated.

This value is 0.075.

Table 2. Exposures and manhours for the head lift operation

ETN	Description	Exposures	Manhours	MPC Hours
D20A001	Rx disassy preps	31.534	594	13.9
D20E001	RDD sup outside contract	0.106	133	0.8
D20F001	Fuel canal mods	8.460	164	4.2
D22E001	Neut shield tanks	11.419	157	18.5
D22E002	Head insul	9.902	143	16.3
D22E003	RV stud removal	18.477	298	5.2
D22E004	Canal seal plate	23.091	388	22.8
D22E005	CRDM removal	6.620	130	8.4
E22E006	AFHB	21.708	327	12.2
D22E007	Serv struct hoist	1.036	16	0.9
D22E008	Missile shields	1.897	29	2.1
D22E012	Canal access	5.314	90	3.0
D22E013	Service air	3.105	38	1.6
D22E014	Temp power	0.204	27	0.3
D22E016	Cable disconnect	0.991	18	4.5
D22E018	Head store std	1.618	22	0.4
D22E019	IIF	17.583	326	6.3
D22E022	Guide studs	0.194	5	0
D22E023	D-ring catwalk	0.559	9	0.2
D22E024	Spool piece removal	1.558	23	0.8
D22E026	Flood line	0.420	8	0.4
D22E028	Fill provision	3.282	65	0.3
D22E029	Lift mont equip	2.893	49	0.9
D22E030	Remove head	18.597	333	9.1
D22E031	First pass stud deten	14.689	144	2.0
D35E001	Shield serv struct	13.426	192	20.8
D35E002	Shield head store std	42.616	712	10.3
D41D001	Rx pre-head-lift exam	2.553	44	2.5
D41G003	Video equip install	0.506	14	0.7
	Head lift subtotal	264.358	4498	169.4
	Support activities	57.0	10862	59.2
	Totals	321.358	15360	228.6

ETN—Exposure tracking number

MPC—Maximum permissible concentration (airborne radioactivity)

The table below depicts reactor building mean exposure/manhour for each month of the head lift in 1984.

January	0.080
February	0.076
March	0.076
April	0.071
May	0.076
June	0.081
July	0.065
The average value is	0.075.

It should be noted that the mean exposure/manhour for the month of July 1984 (head removal/IIF installation) was the lowest monthly value ever observed under post-accident conditions. This is largely the result of the many manhours spent within shielded work areas during head removal/IIF operations.

The mean exposure/manhour for the 10 days following head removal/IIF installation is 0.073, which is indicative that post-head-lift radiation levels are essentially the same as pre-head-lift levels.

5.1.3 Radiation Level Changes During Head Removal, IIF Installation, and IIF Platform Installation. As discussed in the previous section, the post-head-lift radiation levels for all work in the reactor building were basically the same as the pre-head-lift levels. Some minor shifts occurred at the edges of the fuel transfer canal and in the immediate vicinity of the stored head. Lower levels than predicted were observed because of the lower than expected radiation levels from the parked lead screws and the plenum assembly. The reactor building radiological air quality was virtually unaffected by head lift and subsequent operations.

Throughout head removal and IIF installation, a 13 channel area gamma monitoring system was used to observe radiation level changes. Table 3 is a summary of radiation data recorded from these instruments. Instrument locations and functions are shown in Figure 35.

5.2 Lessons Learned

The head removal operation presented an unusual challenge from which valuable lessons may be derived for the planning and execution of a nuclear cleanup project. The basic operation of removing a reactor head from a reactor vessel is well known; however, the post-accident conditions at TMI-2 required some deviations and special care. Shortly after completion of head lift, a critique was held to review the operation. Each participating group submitted items for discussion, many of which were resolved during the critique while others required some research for full characterization and resolution.

The lessons to be derived from this operation have been grouped into three broad categories that are applicable to any similar operation: (a) equipment (section 5.2.1), (b) documentation (section 5.2.2), and (c) personnel (section 5.2.3). All of the categories are interrelated and often reflect some other aspect of the same situation. The lessons learned are discussed within this framework to provide a focal point for analysis. At the broadest level, they are generic and may be applied to any similar operation. Examples of specific lessons are discussed within these areas as they occurred during the head removal operation. Each example contains a discussion of its context and a corrective action.

5.2.1 Equipment. The need for an adequate supply of reliable equipment, especially that which is essential to the critical path, was a primary lesson derived from the head lift operation.

5.2.1.1 Inventory. An inventory accounting system and adequate backup supply of equipment and tools should be maintained based on conservative estimates of potential needs. Two areas illustrate this:

1. ***Trouble Shooting.*** When making unscheduled entries, improvements were needed to make sure that items were logged in and out so that the next crew was aware of what was in the reactor building and what needed to be taken in. The trouble shooting work performed on the crane and camera could have been simplified if the equipment, tools, and parts had been prestaged into the reactor building.

2. ***Equipment Shortages.*** A review of protective equipment showed that ice vests, oversized hoods, and respirators were in short supply. To prevent a recurrence, the stock of each item should be substantially increased and planning should provide for

Table 3. Gamma radiation summary for head removal

Evolution	AMS-3 Air Monitor (x 1000 cpm)	347 Area Gamma Monitors (mR/h)												
		On Floor 347 South IIF Area 1	1.5 m Above South End of Canal 2	South End 'A' D-Ring Walkway 3	Halfway on 347-D-Ring Stairway 4	Canal Floor South of Head 5	Midway 'A' D-Ring Walkway 6	Midway on Floor West Side 7	Canal Floor North of Head 8	1 m Above North End of Canal 9	Midpoint D-Ring to D-Ring Catwalk 10	Midway on East Cable Tray 11	Midway 'B' D-Ring Walkway 12	Shield Station 13
Base prior to lead screw parking	NR	NR	<100	NR	NR	<100	70	50	<100	NR	NR	30	OOS	15
Baseline just prior to head lift	2 c/o	50	<100	60	40	<100	80	40	<100	60	30	40	90	14
Head raised vertically 1 m	1.1	50	<100	70	40	3,500	80	100	3,000	250	40	50	100	14
Head in south end of canal	1.1	60	150	80	40	15,000	170	4,000	3,000	1,000	1,000	2,500	150	20
Head hoisted to 357 ft el. in canal	1.1	90	750	100	50	3,500	200	1,000	3,000	1,100	1,000	2,500	200	25
Head south on 347 ft el.	2	5,000	700	100	40	3,000	200	400	3,000	1,100	1,000	2,500	150	22
Head centered above stand	2	80	500	100	100	3,000	200	400	3,000	1,100	1,000	2,500	150	30
Head landed on stand	3.5	70	500	100	70	3,000	200	400	3,000	1,100	1,000	2,500	150	30
IIF installed (commence fill)	NR	50	500	100	70	1,700	150	300	1,800	600	800	2,000	150	NR
IIF filled even with RV flange	NR	40	400	100	70	1,700	150	300	1,800	600	800	1,800	140	NR
IIF filled to ~25 cm above flange	NR	35	370	90	70	1,300	130	250	1,500	500	600	1,300	130	NR

Table 3. (continued)

Evolution	AMS-3 Air Monitor (x 1000 cpm)	347 Area Gamma Monitors (mR/h)												
		On Floor 347 South IIF Area 1	1.5 m Above South End of Canal 2	South End 'A' D-Ring Walkway 3	Halfway on 347-D-Ring Stairway 4	Canal Floor South of Head 5	Midway 'A' D-Ring Walkway 6	Midway on Floor West Side 7	Canal Floor North of Head 8	1 m Above North End of Canal 9	Midpoint D-Ring to D-Ring Catwalk 10	Midway on East Cable Tray 11	Midway 'B' D-Ring Walkway 12	Shield Station 13
IIF filled to ~50 cm above flange	NR	35	300	90	70	600	110	200	600	350	400	900	110	NR
IIF filled to ~75 cm above flange	NR	30	200	90	70	180	100	120	180	180	250	500	100	NR
IIF filled to ~100 cm above flange	NR	30	<100	80	70	<100	80	60	<100	70	60	110	90	NR
IIF filled to ~145 cm above flange	NR	30	<100	70	70	<100	70	40	<100	70	30	40	90	NR
IIF shield cover installed	NR	NR	<100	70	70	<100	70	30	<100	60	25	30	80	NR

NR—Not recorded

OOS—Out of service

Monitors used:

0.01-100 R—Eberline DA1-4
0.1-1000 R—Eberline DA1-5

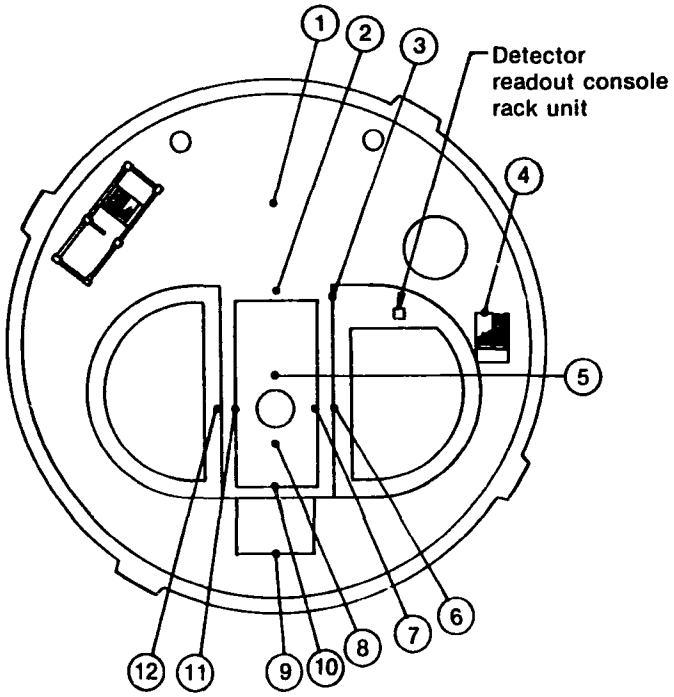

Reactor building
347-ft elevation

Detector Number	Detector Location	Detector Range (R/h)	Purpose of Detector
1	El-347 general area	0.01-100	General area monitoring
2	South end of canal	0.1-1000	Access control
3	Video console area	0.01-100	Access control
4	First landing of s/w	0.01-100	Access control
5	Canal south of head	0.1-1000	Head lift monitoring
6	D-ring railing	0.01-100	Access control
7	Canal walkway	0.01-100	Access control
8	Canal north of head	0.1-1000	Head lift monitoring
9	North end of canal	0.01-100	Access control
10	D-ring catwalk	0.01-100	Access control
11	Canal walkway	0.01-100	Access control
12	D-ring railing	0.01-100	Access control

An additional area monitor is located within the shielded head lift station. This unit would alarm at 1000 mR/h and was the only gamma monitor with a preset alarm function. All other monitors alarm at full-scale readings.

4 2208

Figure 35. Gamma monitoring equipment identification and locations.

sufficient personnel to process the respirators at peak periods.

5.2.1.2 Testing and Evaluation. Measures should be taken to ensure that off-the-shelf equipment will perform satisfactorily.

1. ***Lead Blanket Shielding.*** Two hangers failed load tests at a 200% load and all hangers were returned to the vendor in September 1983 for weld rework. The hanger assemblies also contained fabricated eye bolts that were of poor quality but did not fail during load testing, and consequently were not returned with the hangers. The reworked hangers were later returned and approved for use. Procurement had been designated as "Not Important To Safety" with no Quality Assurance/Quality Control (QA/QC) involvement; however, field engineering inspection identified the problem.

   While the lead blankets were being staged into the reactor building, one of the fabricated eye bolts failed and a 160 kg lead blanket dropped 2 m. All of the fabricated eye bolts were replaced with commercially forged eye bolts and the shielding installation was completed.

   To confirm that the hangers were acceptable, a spare hanger was tested to 150% of capacity with no degradation. Based upon a subsequent request by the NRC, the hanger was re-load-tested to 400% with no degradation.

2. ***Water Column Leakage.*** Before the head lift, only two of the many installed water columns had leaked. The remedial action chosen was routine monitoring of the water level and periodic refilling of the problem columns. This record of satisfactory performance of the water columns did not indicate a serious flaw in the design or use of the product, nor did it indicate a need for a post-evaluation of the columns. This satisfactory use of the water columns contributed to the decision not to leak test the columns before their use in reactor building for the head storage stand shielding. However, leaks were discovered when they were installed around the stand and filled. A decision was made to use the existing water columns but refill them with sand. This medium also offered the additional benefit of increased shielding.

   A 10% to 15% margin was calculated for the sand volume to ensure no shortages. Of the 80,000 kg of sand taken into the reactor building, 60,000 kg were in use as shielding, leaving an excess of 20,000 kg, or 25%. The variables were such that had quantities been underestimated, head lift would have been delayed. The excess sand did not create the waste management problem that was feared because the majority did not become contaminated and was disposed of as clean waste.

   Future shielding applications should include an analysis to ensure the proper product selection for the specific condition. This should also include mockup and testing of those products whose performance is essential in the final installation.

   A matrix document showing the recommended shielding product that best meets the need of a specific condition or circumstance would be useful. This matrix could then be used as a guide by those generating implementation software.

5.2.1.3 Repairs. Potential repair operations should be thoroughly evaluated before an operation to ensure that they can be conducted with a minimum impact upon the schedule if required during the operation. The repair work required on the polar crane illustrated this. Future operations also need to stress proper management of cables.

1. ***Failure of Polar Crane Pendant Switch.*** After the head service structure was manually manipulated onto the head stand guide pins, the polar crane malfunctioned in the main hoist lower mode. In this position, the crane could not be operated in any other mode for fear of moving the head off the guide pins. A team of electricians walked the polar crane rail to trouble shoot the crane. They found that the 480 V break circuit was energized but the 480 V lower control contacts were open. They checked through the 120 V control circuit and found the overload relays and fuses intact. Only the pendant control switches

remained to be checked. At this point, the decision to lower the load electrically from the crane was made. By placing an electrical jumper across the 480 V lower contacts while the Coordination Center and polar crane operator watched the Dillon load cell scale, the head was safely lowered onto the head stand.

Once the head was unrigged, the polar crane operator operated the crane in all modes. The main hoist lower mode was the only mode that did not function, so the operator held the lower switch in place on the pendant while pressing the speed button. The crane then lowered in slow and fast speed. A team replaced the pendant switch and found that the screws holding the switch plunger assembly had loosened, allowing the switch handle to turn but not fully engage the plunger assembly, thus preventing current from flowing through the switch to the polar crane. This switch was replaced with an in-kind component and all the other screws in the pendant were checked and tightened. The polar crane was tested again in all modes and functioned normally.

Easy access should be provided to the polar crane, regardless of its location.

2. ***Failure of Relay in Polar Crane Hoist Circuit.*** The second polar crane failure occurred when the IIF platform was within 2.5 cm of seating on the IIF. A team of electricians accompanied by an engineer were sent to trouble shoot the polar crane pendant located on the 367 ft elevation. Trouble shooting revealed that the problem was in the bridge control cabinet. The IIF platform was then manually lowered and unrigged so the crane bridge could be moved to the park position for easy access. A second team of electricians with a detailed trouble shooting plan identified the problem as a relay that failed to close a set of contacts which in turn engaged the brake circuit. The brake had to be energized as a prerequisite for the main hoist to function. A jumper was temporarily installed across the open contacts and the crane functioned as designed. This second polar crane failure differed from the first in that the main hoist would not function in either the up or down mode.

   An in-kind replacement relay was tested before it was installed on the polar crane. After the new relay was installed, the crane was thoroughly tested, not only in the main hoist mode but also in the trolley and bridge modes. In addition, the defective component was tested and examined after it was removed from the reactor building to determine the cause of the relay failure. The relay was subjected to a cyclic test and performed 1350 cycles without failure. The cause of its failure inside the reactor building is unknown.

3. ***Failure of Guide Stud Hole Camera Cables and Cable Under IIF During Seating.*** These were cable management problems that could have been eliminated by allowing less slack in the cables. This will be made a specific review item for critical lifts involving the need for remote handling. In addition, during head lift, the polar crane power cables came too close to the reactor building wall. For future precision and critical lifts, cable management should be planned.

   In addition, the power to radiation monitors and the polar crane target camera became unplugged. Time was lost in correcting the problem because the cables and their connections were not clearly identified. Proper cable management that includes tagging the cable, securing the plugs, and controlling the slack is required.

5.2.2 Documentation. The documentation required for the operation was extensive, requiring multiple levels of review and approval. Planning was required to ensure that the operation followed procedures and that any changes could be expedited by available personnel.

5.2.2.1 Approvals. A system should be in place to facilitate rapid review and approval of necessary changes from planned operations, and to provide technical assistance.

1. ***Planners/Staff.*** A task force of planners and staff members was available in the Coordination Center to expedite changes to procedures or work instructions. The individuals had signature authority for reviews and approvals. Because they were aware of actual

operations, they were able to support alternative courses of action quickly. The personnel should be on 12 hour shifts during future operations to facilitate communication and maintain continuity.

2. ***Technical Assistance Team.*** The Technical Assistance Team was present, although only requested to participate in one instance. Because of the nature of the problems encountered, other personnel who were more directly involved in specific aspects of the preparations for head lift resolved the problems. For future critical lifts, the location of the Technical Assistance Team should be reconsidered.

5.2.2.2 Procedures. The operation should be documented to ensure efficient, thorough planning and implementation. The following items describe some procedural difficulties experienced with the head lift operation.

1. ***Documentation Problems.*** One action should not be controlled by more than one document. This introduces the likelihood of overlooking details, increasing the potential for conflicts, and increasing the effort required to make changes. This was a problem with the sequence document and head lift procedure. Similar steps were in both documents. The procedures and documents for future operations should be re-evaluated to ensure there are no duplicate steps.

2. ***Calibration of Dillon Load Cell.*** Precautions in the polar crane load test procedures for the Dillon load cell were not incorporated into the head lift procedure. This information would have identified the need for zeroing and aligning the Dillon load cell, which delayed the head lift rigging operation for four hours. To ensure that this will not happen for future critical lifts involving use of the load cell, a stand-alone procedure should be written for use of the Dillon load cell.

3. ***Piping Flush.*** As a contingency during head removal, the capabilities to flood the canal for radiation protection and to mist the exposed plenum for airborne radioactivity control were put in place. This involved tie-ins with piping and hose to existing plant systems to achieve a flow path from the BWST to the fuel transfer canal. The new installation piping and hose were hydrostatically tested in the shop and installed before head lift; however, the total flow path's existing pipe was not flushed.

   Consequently, on July 20, before the head lift began, the conclusion was reached that the existing piping system in the flow path from the BWST to the canal probably contained out-of-specification water. An aggressive effort was undertaken to complete the system flushes to ensure that only in-specification water would be supplied to the canal fill and misting systems. Approximately six hours were spent in completing the initial valve lineups and one shift was needed to complete all system flushing, which required 6000 gallons of water. To prevent a recurrence, modifications to the acceptance of turnovers should be made to include a verification provision for establishing correct chemistry for fluid systems. This should be in the form of an additional signoff of the turnover checklist or return to services checklist.

5.2.3 Personnel. This category covers all aspects of the operation but focuses on those areas involving the importance of health and safety, morale, and communication.

5.2.3.1 Working Conditions. Every measure should be taken to keep morale high and to encourage teamwork. The head lift operation demanded a great deal of the workers, who responded well to the challenge.

1. ***Worker Fatigue.*** Workers should be rested, cool, and calm before an entry. Supervisors should be sensitive to the stress experienced by those making entries. Workers who perform well, as did those in the personnel access facility, should be congratulated for their efforts.

2. ***Improve Shift Turnovers.*** All personnel were scheduled to work 12-hour days. However, the shift schedule allowed turnover at different times for different organizations, which resulted in three turnovers per shift change. For future such activities, a single

shift turnover meeting involving all participants should be held and all personnel should work the same shift schedule to maintain a smooth flow of work.

3. ***Coordination Center.*** Too many people were in the Coordination Center during head lift; however, "Who is excess?" is the real issue. A different arrangement for the future should involve the issuance of a limited number of passes or tickets per department. When that number of passes is in use, no other personnel could enter until someone from that department leaves. There should be no exceptions and no access lists beyond those authorized to hold passes. Individuals responsible for Coordination Center operations, by procedure, should make the determination.

5.2.3.2 Training. Workers should receive as much preliminary training as possible to familiarize them with the working conditions and required operations. Training on accurate mockups using the actual procedures represented the most significant contribution to the successful head lift.

1. ***Training and Mockups.*** The efforts put into training and mockups for the head lift had a major positive impact on the final operations. Because of the accuracy and applicability of the training, workers were better able to perform jobs in the reactor building successfully. The mockup and training programs should continue as presently constituted.

2. ***Reactor Building Walkdowns.*** Two days before head lift, the crew leaders walked through the reactor building to ensure they were all familiar with its conditions. During the course of the walkdown, they were able to identify locations of potentially useful equipment for contingencies and the locations of equipment that should be changed because it could potentially cause an interference. This should be done for future critical lifts.

5.2.3.3 External Communications. In addition to management, supervisory level personnel should also be aware of public interest dimensions of their activities and should be kept mindful of the Communications Division's responsibility, on behalf of the Company, to fully and promptly inform the public on operations of likely public interest or concern.

Operation of Purge During Head Lift Activities/ Communications. Company spokespersons were not made aware in advance of the possible extent of delays during the head lift like those that were actually encountered and that made purging the reactor building advisable. During two periods between heavy lifts, the building purge was operated at no risk to public health and safety but contrary to prior Company statements that the building would be sealed during the head lift operation. Some operations supervisors were not aware or mindful of those previous Company statements. For the future, the internal planning process for plant operations should include full discussion of the possibility of extended difficulties. Company statements in advance of such operations should reflect such awareness. If such difficulties or delays are actually encountered, supervisors should be mindful of the need to advise Communications, if at all possible, *before* actions are taken so that the public can be kept promptly advised.

5.2.3.4 As Low As Reasonably Achievable. Almost every area discussed thus far has contained elements that reflect the concept of ALARA. Several specific items have been singled out below to specifically illustrate the lessons learned during the head lift operation.

1. ***Over-Conservative Radiation Calculations.*** Calculations were based on lead screw data and underhead characterization data. In general, the actual dose rates observed during head lift were a factor of two lower than estimated. Because the dose rate modeling had to be based on data obtained from underhead characterization, considerable uncertainties were associated with it. Thus, the accuracy of the predicted estimates was reasonable and conservative (i.e., over-estimated) from a radiation protection standpoint.

2. ***Revised Work Locations in Course of Operation Based on As-Read Radiation Levels.*** During the leveling of the head, personnel were required to return to the shielded enclosure by procedure. After the initial lift, the actual radiation levels were reviewed and

the requirement to return to the shielded enclosure was modified so that the task supervisor could determine whether a return to the enclosure was required. This sort of flexibility is desirable during work in the reactor building.

3. ***Skin Contamination.*** Six cases of skin contamination occurred during six hundred radiation work permit (RWP) hours in the head lift week. No change in operations is planned.

4. ***Whole Body Counter Operation.*** The whole body counter was open whenever it was needed, which was approximately 20 hours per day. For future large scale operations, the counter should continue to be open as needed to support the work.

5. ***Failure of Polar Crane Camera.*** The camera, which provided the polar crane operator with the information on the pre-placed targets for crane location, failed before the start of head lift. There was no installed backup for this camera although a spare camera and spare parts were available on-site.

Several solutions to this problem have been proposed. The preferred solution is to have an I&C repair team with spare parts available during such lifts. This assumes that radiological criteria can be met. If this were done, future delays from failures of this type could be accomplished in minutes instead of hours. Radiological Controls should assess the radiological impacts of this during plenum lift.

Two other alternatives exist: (a) install a second camera or (b) provide better access to the polar crane regardless of the bridge location.

6. REFERENCES

1. *The Planning Study for Reactor Vessel Head Removal*, TPO/TMI-022, October 1982.

2. *The Technical Plan for Reactor Disassembly and Defueling*, TPO/TMI-005 Rev. 2, January 1982.

3. "Detail Head Lift Schedule," IDS-100.

4. *Underhead Data Acquisition Program*, TPO/TMI-110, March 1984.

5. R. W. Garner, D. E. Owen, and M. R. Martin, *An Assessment of the TMI-2 Axial Power Shaping Rod Dynamic Test Results*, GEND-INF-038, April 1983.

6. *Disposition of Leadscrews During Reactor Vessel Head Removal*, TPO/TMI-101, April 1984.

APPENDIX A
DESIGN ENGINEERING
REACTOR VESSEL HEAD REMOVAL ACTIVITIES

Published April 1985

Bechtel North American Power Corporation
Gaithersburg, MD 20877-1454

Prepared for EG&G Idaho, Inc.
and the U.S. Department of Energy
Idaho Operations Office
Under DOE Contract No. DE-AC07-76ID01570

SUMMARY

Removal of the reactor vessel head was the first major step taken towards removal of the damaged core. This major milestone was reached ahead of schedule on July 24, 1984. Engineering modifications to plant systems and tools needed for head removal began more than two years prior to the event. Normal plant procedures and tools could not be used, because the accident rendered some of the plant systems inoperable and resulted in much higher radiation levels in the reactor building than would be seen during a normal plant outage. Even though decontamination of surfaces and installation of shielding was planned, special preparations had to be made before the reactor coolant system pressure boundary could be opened.

Opening the reactor coolant system for the first time required analyses and procedural precautions for issues such as criticality safety and boron dilution of the coolant, releases of krypton, control of hydrogen gas generation, evaluation of the potential for pyrophoric reactions of core debris, heavy load handling, and worker dose minimization.

In addition, special precautions were taken to improve the reliability and operability of tools and equipment, while additional safety and radiological considerations were applied to the preparations for and sequence of head removal. Inspection plans and upgrade modifications were developed for existing equipment such as the tripod rigging, the canal seal plate, and the stud detensioning tools. Special provisions were made as a result of the higher radiation levels, which included shielding the reactor vessel head during its transfer and storage and adding shielding water over the plenum assembly by providing a gasket seal for the internals indexing fixture (IIF).

CONTENTS

ABSTRACT A-3

SUMMARY A-4

INTRODUCTION A-7

Evaluations and Analyses A-7

Plant Modifications and Additions A-7

Tools and Support Systems A-7

EVALUATIONS AND ANALYSES A-10

Criticality Analyses A-10

Decay Heat Removal Analysis A-11

Gaseous Release Analysis A-12

Heavy Load Drop and Reactor Vessel Head Drop Analyses A-14

Shielding Studies A-15

Technical/Safety Evaluation Reports A-15

PLANT MODIFICATIONS AND ADDITIONS A-17

Compressed Air A-17

Breathing Air/Body Cooling A-17
Service Air A-19
Instrument Air A-19

Fuel Transfer Canal Fill and Draining Systems A-19

Fuel Transfer Canal Fill System A-20
Fuel Transfer Canal Draining System A-20

IIF Processing and Water Level Monitoring Systems A-23

IIF Processing A-23
IIF Water Level Monitoring A-25

Reactor Vessel Head Storage Stand A-27

Reactor Vessel Head Removal Rigging A-28

Dillon Load Cell A-28
Head and Internals Handling Fixture Assembly (Tripod) A-28
Internals Handling Extension A-30
Turnbuckle Pendant Assemblies A-30
Head Removal Slings A-30
Head Lifting Lugs A-30

Canal Seal Plate Modifications A-31

Video Monitoring A-32

Reactor Building Chilled Water A-34

TOOLS AND SUPPORT SYSTEMS A-35

Internals Indexing Fixture Modifications A-35

Internals Indexing Fixture Cover A-36

Contamination Control Barrier/Ventilation System A-39

Head Removal Tools A-42

Stud Tensioners A-42
Stud Hole Preparation Tools A-43
Stud Handling Tool A-43
Stud Hole Seal Plugs/Guide Studs A-43

Contingency Planning A-46

Jacking Equipment and Wedges A-46
Underhead Flushing System A-46
Stuck Nut Study A-49
Head Warpage Study A-49

RADIOLOGICAL CONSIDERATIONS A-53

Radiological Predictions A-53

Exposure Estimates A-53
Dose Rates During Head Removal A-54

ALARA Provisions A-55

REFERENCES A-58

APPENDIX A
DESIGN ENGINEERING
REACTOR VESSEL HEAD REMOVAL ACTIVITIES

INTRODUCTION

Design Engineering provided engineering and design services in support of the cleanup. For the reactor vessel head removal program, these responsibilities included the following broad groups of activities:

Evaluations and Analyses

This group included performance and coordination of those evaluations necessary to demonstrate the safety of planned plant modifications and operations. These evaluations and analyses were included in licensing documents issued to regulatory bodies and in engineering change memoranda/authorizations (ECMs/ECAs) that controlled plant modifications.

Plant Modifications and Additions

Design Engineering provided design, documentation, and procurement services for those plant modifications and additions needed to support head removal. See Figures A-1 and A-2 for the configuration of the reactor building before and after head removal.

Tools and Support Systems

This group included design and fabrication for those new tools and structures, or modifications to existing tools and structures necessary for head removal. In several cases, the tools that were needed were part of the reactor vendor's (Babcock & Wilcox) standard tool set; in other cases, new designs were developed, proof tested, and fabricated. Modifications to existing tools were required in some cases to accommodate the special conditions at Three Mile Island (TMI).

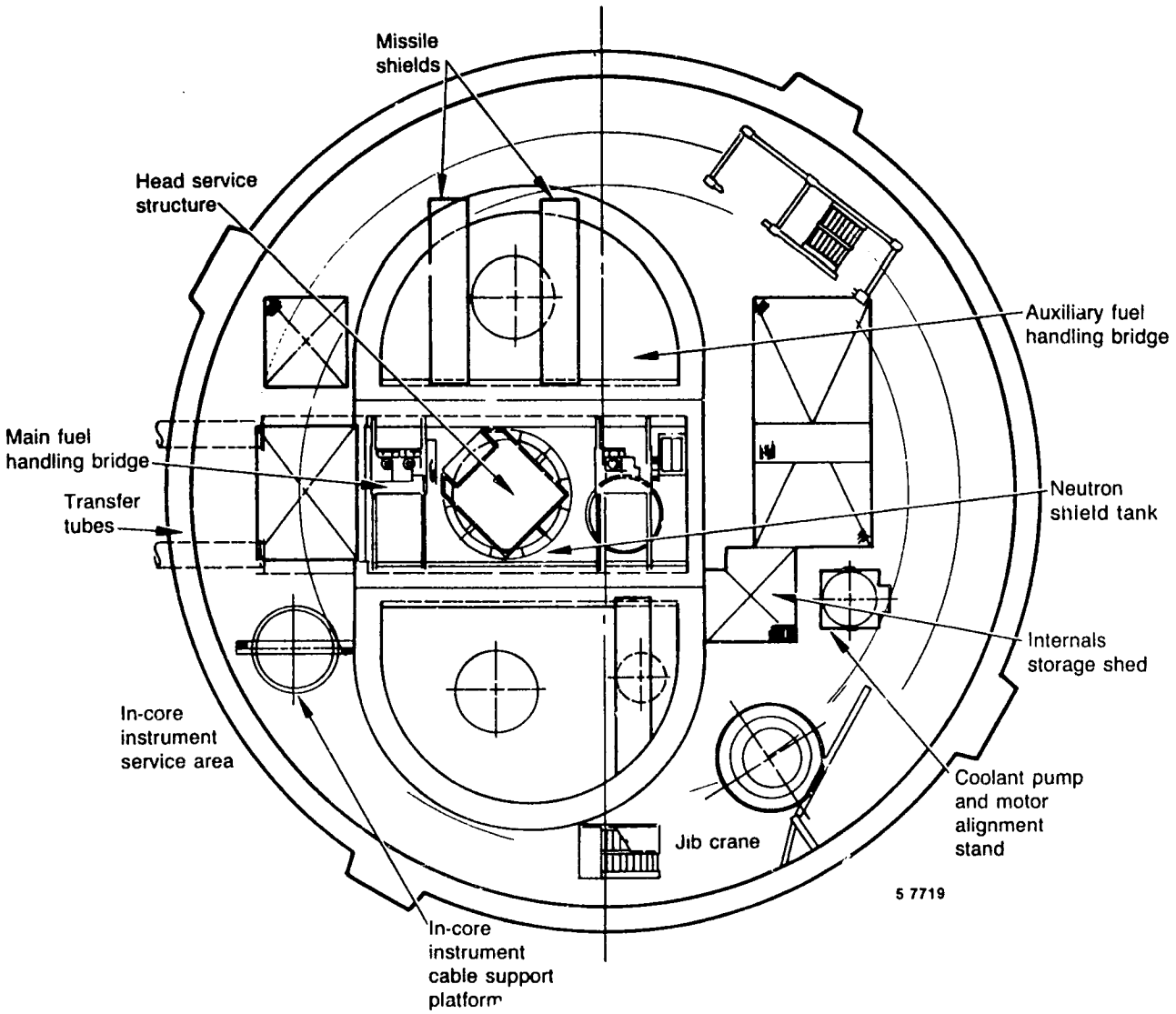

Figure A-1. Reactor building general arrangement before head removal.

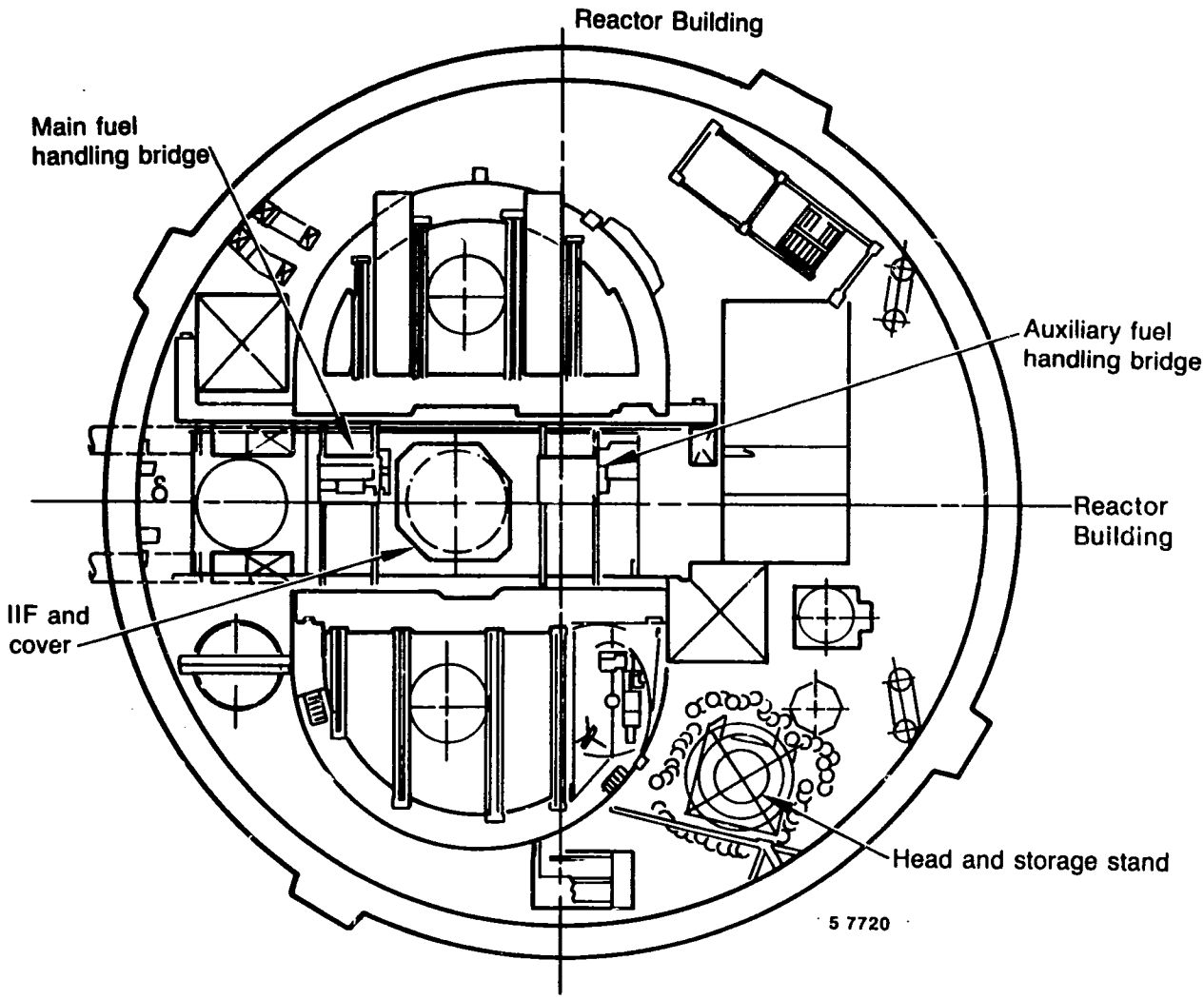

Figure A-2. Reactor building general arrangement after head removal.

EVALUATIONS AND ANALYSES

Criticality Analyses

Criticality calculations of shutdown margins for postulated core configurations were performed before the first camera inspection inside the reactor vessel.[1] After the camera inspection, the observed core features were compared to the postulated damage models used in the calculations to assess the validity of the calculated shutdown margins. The subsequent report concluded that the results of the previous analysis were bounding for the proposed configuration since the analysis assumed a greater amount of fuel damage than was observed during the camera inspection.[2]

The original analysis used conservative core configurations assumed to represent worst case conditions through head removal activities, except for major core rearrangement associated with a head drop on the reactor vessel. These static configurations included a maximum credible core damage model (50% core damage in a debris bed over 50% intact fuel assemblies) and a model for 100% core damage. In addition, an analysis of fuel was made in the reactor vessel outside the core region. Models included a sphere of 50% of the damaged highest enrichment fuel (19 assemblies) in the bottom of the reactor vessel, a hemisphere of 50% of the core in the lower vessel, and a cylinder of fuel particles falling down from the core region. For all postulated conditions, subcriticality was maintained with a reactor coolant boron concentration of 3500 ppm.

The precise configuration of the fuel was unknown at the time of head removal; therefore, the exact k_{eff} resulting from the potential redistribution of the fuel due to the impact of the reactor vessel head and support structure on the reactor vessel could not be calculated. However, conservative calculations using various models of the damaged core were performed to provide assurance that the core would remain subcritical with sufficient poisoning of the system.[3]

The criticality analyses to support the cleanup activities through head removal had modeled the core assuming 50% cladding failure in all fuel rods. The heavy load drop model was conservative for criticality analyses because it assumed 12% additional fuel damage and an optimization of all parameters affecting core reactivity. The degree of damage (62%) is the maximum credible amount of cladding failure. The model assumed that the fuel was collapsed to the most reactive configuration, i.e., that the damaged batch 3 (highest enrichment) fuel was sandwiched between the undamaged fuel on the bottom and the remaining damaged (batches 1 and 2) fuel on the top. This separation of all the damaged batch 3 fuel from the other damaged fuel produces a higher reactivity than any homogenized mixture of all the damaged fuel. The analyses indicated that with this conservative model the core would remain subcritical (k_{eff} = 0.988) with a boron concentration of 3500 ppm. However, the model could have been nonconservative if additional fuel disruptions occurred as a result of a heavy-load drop accident.

A more realistic case was also analyzed. This case still assumed segregation of the damaged batch 3 fuel, but assumed that this fuel was in a layer on top of the damaged batches 1 and 2 fuel (i.e., the peripheral fuel assemblies collapsed on the existing rubble bed). Instead of optimizing the particle size and arrangement as for the conservative case, the more reasonable assumption of random particle size and distribution was used. The effects of structural materials were also considered, and the boron concentration was assumed to be 3700 ppm, which was the boron concentration in the reactor coolant system (RCS). For the more realistic case, the value of k_{eff} was less than 0.944.

Decay Heat Removal Analysis

Head removal activities required that the RCS water level be lowered to the 321 ft-6 in. elevation, which is about 30 cm below the plenum cover plate. At this elevation, less water was in the RCS than had been maintained in the past except during the underhead characterization program. As a result of having less water in the RCS, the ability to

continue to remove decay heat adequately and maintain the bulk RCS temperature within procedural limits (75°C) for the losses to ambient cooling mode was investigated.

An analysis of decay heat removal ability with the RCS water level at the 323 ft-6 in. elevation was performed prior to the first camera inspection inside the reactor vessel.[4] An additional analysis was performed assuming the RCS water level at the 321 ft-6 in. elevation and at the bottom of the reactor vessel nozzles (314 ft elevation).[5] The results showed that even for the conservative analysis the expected rise in RCS temperature would be acceptable to maintain the losses to ambient cooling mode for the normal draindown level of 321 ft-6 in.

The analytical report presented both a conservative analysis besides a best estimate analysis. The conservative calculations were made with the models originally developed for the camera inspection safety evaluation. This conservative analysis resulted in equilibrium RCS bulk temperatures of 70°C and 85°C for RCS water level at the 321 ft-6 in. and 314 ft elevations, respectively, based on the decay heat rate for July 1, 1983. The best estimate models, benchmarked to temperatures measured following the partial draindown for the camera inspection, were developed and used to predict the expected RCS bulk temperatures. These models resulted in RCS temperatures of 50°C and 65°C with the RCS water level at the 321 ft-6 in. and 314 ft elevations, respectively, based on the decay heat rate for July 1, 1983.

Gaseous Release Analysis

The activities associated with reactor vessel head removal were reviewed with respect to radioactive releases to the environment. The potential release of radioactivity to the environment due to these activities was considered to be through the airborne pathway.

During head lift and transfer, containment integrity was maintained to prevent an uncontrolled release of radioactivity from the reactor building. No potential significant release of particulates or tritium was postulated. However, during head removal activities, a remote possibility existed that the ^{85}Kr that was assumed to be in the reactor core could be released. A significant release of ^{85}Kr was postulated as the result of major core disturbance due to a head drop accident and was not a credible result of any planned activity. An analysis of the potential release to the environment was made based on the following assumptions:

- ^{85}Kr inventory at shutdown (March 28, 1979) was 9.6×10^4 Ci.

- Known releases of ^{85}Kr inventory were 4.46×10^4 curies. This was the quantity released during the June-July 1980 reactor building purge. All other releases were ignored for the purpose of making the calculation conservative.

- The remaining ^{85}Kr was decayed to January 1, 1983.

- The off-site doses were based on an instantaneous release of the remaining ^{85}Kr from the reactor building.

- The accident X/Q value was 6.1×10^{-4} s/m^3.

These assumptions yielded a maximum release of 3.74×10^4 Ci of ^{85}Kr. Using Regulatory Guide 1.109 methodology and activity-to-dose conversion tables, the maximum site boundary total body dose from gamma radiation was 12 mrem. The maximum site boundary skin dose from beta radiation was 980 mrem.

This was considered acceptable since it would result only from a heavy load drop accident. It was concluded that a drop of heavy loads would not result in off-site doses that exceed 25% of 10 CFR 100 limits of 300 rem thyroid and 25 rem whole body even with the use of conservative krypton inventories.

Heavy Load Drop and Reactor Vessel Head Drop Analyses

Heavy loads that were handled during the head removal evolution included the reactor vessel head assembly, which included the lift rigging; the vessel closure head; the control rod drive mechanism (CRDM) motor tube assemblies; and the service structure and attached shielding and support frame. Other heavy loads included the IIF cover and the cover shielding plates, which were installed following head removal. Of these heavy loads and any others that were handled within the given head load path during the head removal evolutions, lifting the head assembly, which approached a weight of 170 tn, was bounding. That is, the consequences of a postulated drop of any other load would be less than those for a postulated drop of the head.

Detailed analyses were conducted to examine the potential consequences of a head drop on the reactor vessel and in the vicinity of safety-related equipment. The analysis of the effects of the drop on the vessel showed that the reactor vessel and its appurtenances could withstand the impact of the reactor vessel head and support structure if it were dropped on the vessel flange from a height of 14 cm or less. The head lift and removal procedure, which contained the detailed instructions for accomplishing this task, specified that until the head cleared the vessel it could be lifted no higher than this height. Instruments for monitoring the lift height were installed prior to the lift and were used to ensure the height was not exceeded.

Besides the structural effects, the potential effects of fuel redistribution due to a head drop on the vessel were analyzed to ensure the prevention of recriticality of the fuel. In addition, a detailed analysis of the load path was performed to ensure that adequate systems required for safe shutdown would be functional following any postulated head drop. Components were not considered to be functional after a heavy load drop that was assumed to occur directly over the components. A component was considered to be an alternative only if it performed the same safe shutdown function as the component subjected to a heavy load drop. Within the given

load path for the head removal, it was determined that any single heavy load drop would not result in a loss of the required safe shutdown functions.

Shielding Studies

Before head removal, data were collected to aid in characterization of the sources inside the vessel. Data acquisition programs included: (a) radiological characterization of the contamination on the lead screw which had been removed before the first camera inspection, (b) underwater ion chamber measurement inside the reactor vessel from the underhead region to the debris bed, and (c) thermoluminescent dosimeter (TLD) measurements from the underhead region through the plenum.

The data were extensively studied to develop underhead source terms, which were then used to calculate radiation dose rates throughout the reactor building during all stages of the head removal program. Requirements for personnel protection were based on these predicted dose rates.

Technical/Safety Evaluation Reports

Drawing upon the analytical work previously discussed, the following safety evaluation reports were prepared to support head removal activities:

1. Safety Evaluation Report for Radiation Characterization Under the Reactor Vessel Head. This information was used to predict the radiation levels expected when the head/service structure was removed.

2. Safety Evaluation for First Pass Detensioning and Removal of Up to Five Studs.[6] This report summarized the results of an evaluation by Babcock and Wilcox (B&W) that determined the pressure-retaining capability of the head after initial stud detensioning.

3. Safety Evaluation Report for Removal of the TMI-2 Reactor Vessel Head.[7] This report described the activities associated with the removal of the head and service structure. It discussed the safety issues associated with the activities, and presented the evaluation that supported the conclusion that the planned activities could be accomplished without undue risk to the health and safety of the public.

4. Safety Evaluation Report for Operation of the IIF Processing System.[8] This report was prepared in support of the new system for processing the water in the reactor vessel.

PLANT MODIFICATIONS AND ADDITIONS

Several existing systems and structures were evaluated for adequacy. In some cases, these systems and structures were modified or supplemented. The engineering activities associated with this effort follow.

Compressed Air

Following the accident, the service air system inside the reactor building was declared inoperable since a portion of the piping had been submerged in accident water. Service was re-established to the reactor building using a new compressor located outside the reactor building and a hose network inside and outside the reactor building, and by modifying the reactor building penetration. To provide compressed air for tools, instrumentation, and worker comfort, systems and system modifications for breathing air and body cooling, service air, and instrument air were designed as described in the following sections.

Breathing Air/Body Cooling

During preparation and head lift, some workers were required to use self-contained breathing apparatus due to airborne radioactive contamination, and others would require body cooling as a result of heat stress that had been experienced due to the amount of protective clothing worn and the required stay times. Based on this need, a system was designed which consisted of two oil-free rotor screw compressors, two refrigerant air dryers, a common air receiver, and a filter. An alarm was also provided in the event carbon monoxide was drawn into the system. The compressors, dryers, and air receiver were weatherproofed and located on the auxiliary building roof. The discharge from the receiver was piped to an existing reactor building penetration. The air was distributed to various outlets in the reactor building through a hose network (see Figure A-3).

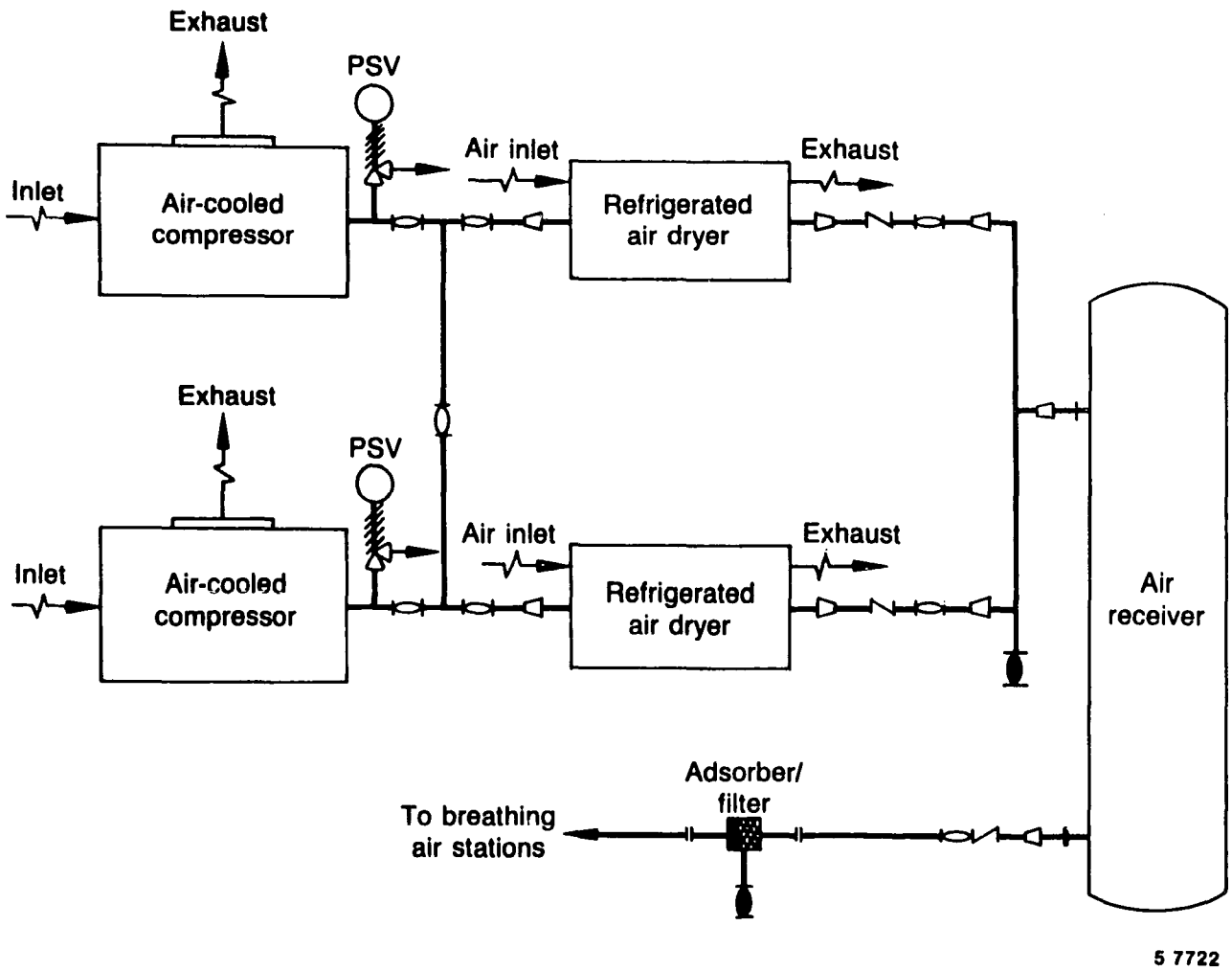

Figure A-3. Breathing air system.

Prior to construction of this system, it was determined that a large source of breathing air would not be needed for head removal. In addition, modification to building cooling reduced the need for body cooling, and a decision was then made to discontinue work on this system.

Service Air

Service air was required to operate pneumatic tools used for detensioning the reactor vessel head. The system installed following the accident had insufficient capacity to support the needs for head removal. The breathing air and body cooling system, with appropriate radiological controls, was determined to have sufficient capacity to supplement the existing system.

Prior to cancellation of the breathing air and body cooling system, the original plant service air distribution system inside the reactor building was modified by cutting and plugging the portions of the system submerged during the accident. This distribution system was retested and shown to contain no unacceptable contaminants. Therefore, the original plant system was returned to service.

Instrument Air

Instrument air was required for operation of the level instrumentation being installed in the reactor vessel, and to operate controls for the IIF processing system. Because no instrument air outlets were provided in the original plant in the reactor building, and since the demand for instrument-quality air was low, a portable compressor/receiver was supplied for use in the reactor building. Air hoses and a portable manifold were used for air distribution.

Fuel Transfer Canal Fill and Draining Systems

Systems were designed to provide a means to fill the fuel transfer canal, if required for shielding, and to drain the canal once the shielding

was no longer required. These systems were required because the plant systems normally used to perform these functions were declared inoperable due to closed valves located in an inaccessible area of the reactor building basement.

Fuel Transfer Canal Fill System

The existing spent fuel cooling system and reactor building penetration were modified, and an air-operated diaphragm pump, distribution manifold, and hose network were added as shown in Figure A-4 to form the fuel transfer canal (FTC) fill system. The existing spool piece used for installation and removal of the start-up strainer for borated water recirculation pump SF-P-2 was removed, and a hose was connected to provide a flow path either directly from the borated water storage tank (BWST) or through either spent fuel pool cooling pump. From here, flow was routed to or around the new diaphragm fuel transfer canal fill pump, depending on whether flow was directly from the BWST or spent fuel cooling pumps, and to the modified reactor building penetration R-565. From R-565, another hose routed the flow through a distribution manifold to the FTC. As a secondary function, the system could be used for initial filling of the IIF.

Fuel Transfer Canal Draining System

To drain the fuel transfer canal, if flooded, a submersible well pump was to be installed in the existing FTC drain line. The drain line was isolated below the pump using two stainless steel pipe plugs (see Figure A-5). Due to inability to seat the plugs because of tolerance incompatibilities, it was necessary to blank off the drain line at the floor level; therefore, the FTC drain pump was positioned horizontally on the FTC floor in the deep end of the canal (308 ft elevation). The pump could then be operated via a control switch located on submerged demineralizer system (SDS) control panel CN-PNL-1 at the 347 ft-6 in. elevation of the fuel handling building.

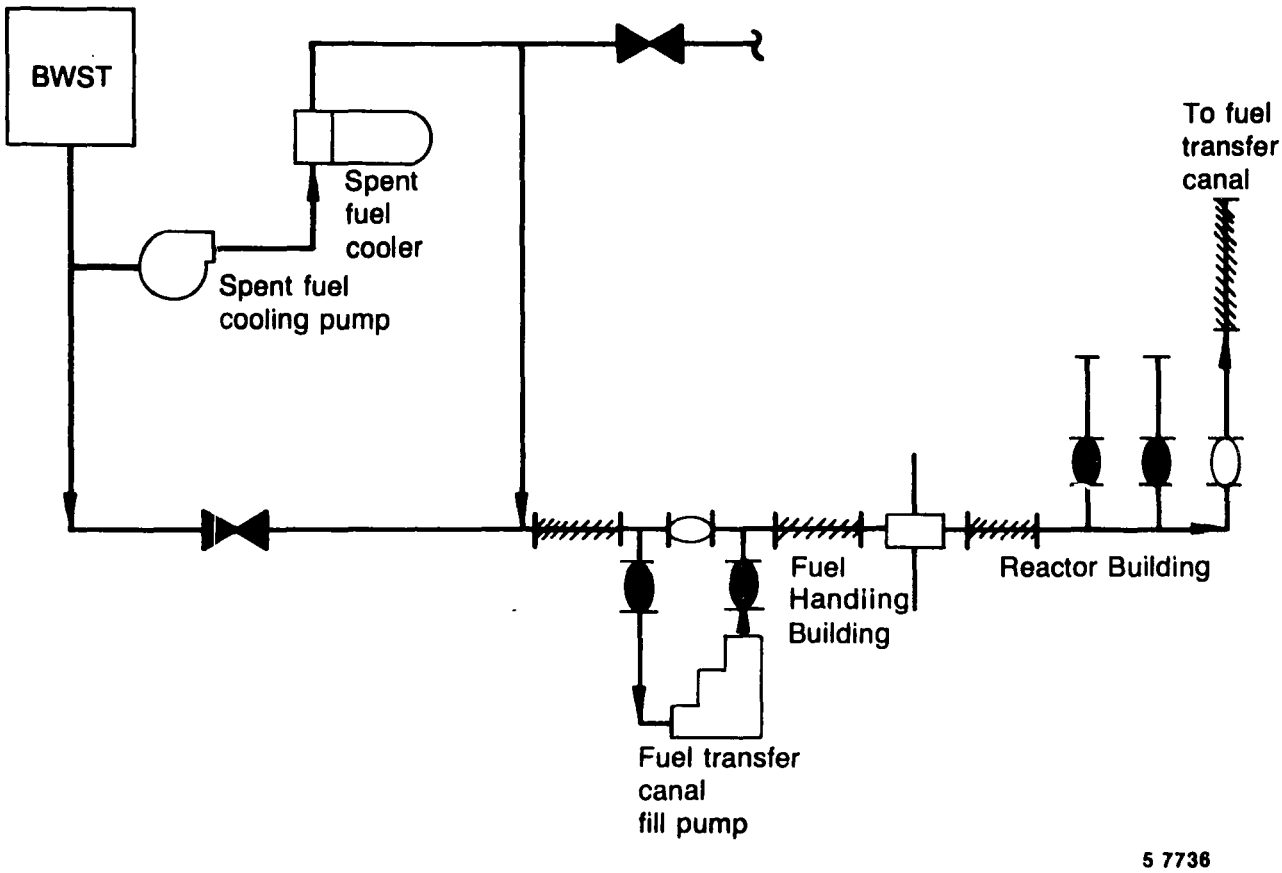

Figure A-4. Fuel transfer canal fill system.

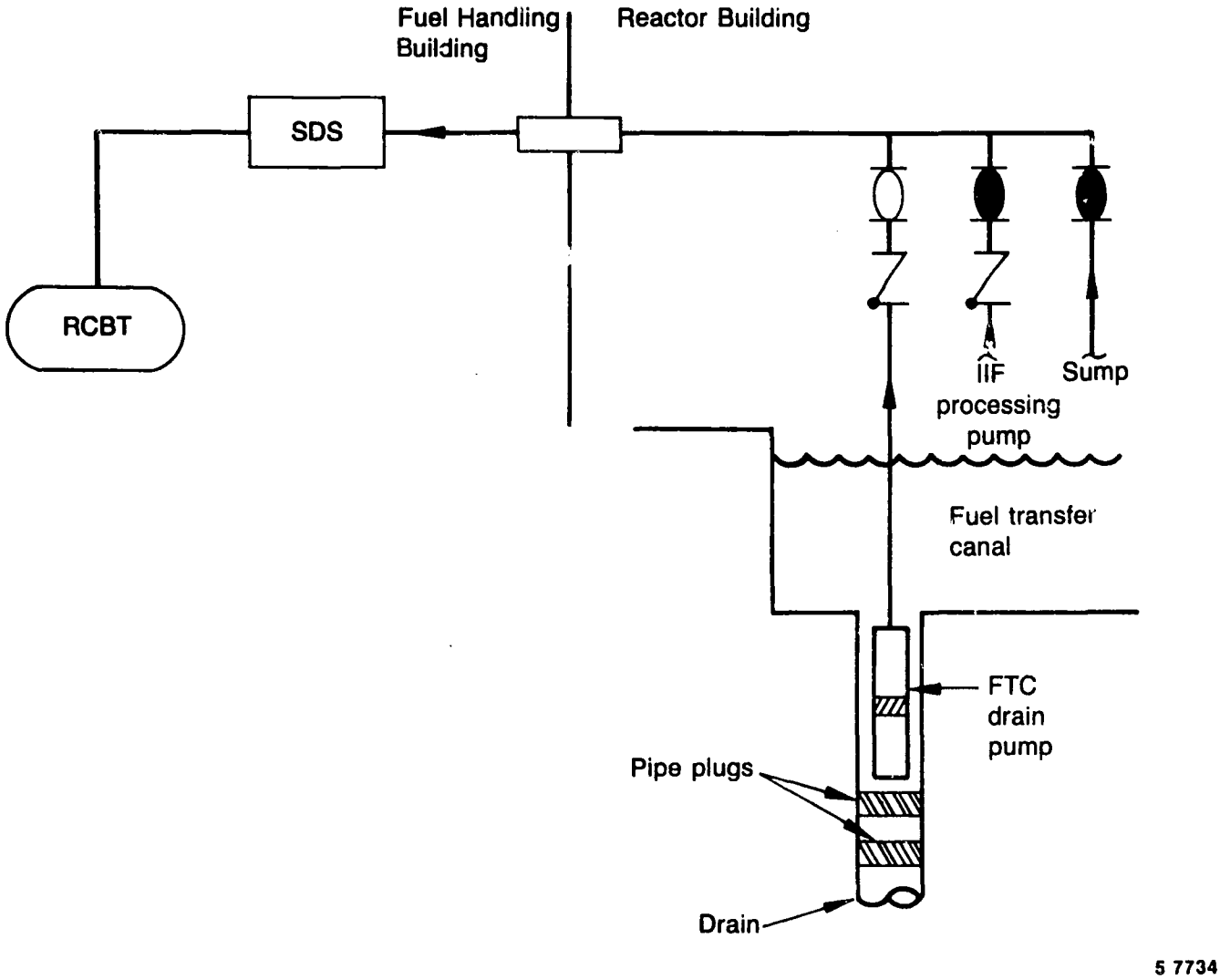

Figure A-5. Fuel transfer canal draining system.

A rubber hose connected the FTC drain pump to the canal drain manifold. This manifold joined the canal drain system, the reactor building basement jet pump system, and the IIF processing system into a common discharge pathway. During operation of the canal drain system, the IIF processing and the reactor building basement jet pump system branch lines of the manifold were isolated. A pressure gauge was provided on the manifold outlet and a valve on the manifold was provided to adjust the manifold outlet pressure.

The common manifold discharge line was connected to the SDS via reactor building penetration R-626 and fuel handling building penetration 1551. Flow could be routed through the SDS pre- and final filters and to the reactor coolant bleed tanks by existing piping.

IIF Processing and Water Level Monitoring Systems

IIF Processing

The IIF processing system was designed to maintain the radioactivity concentrations in the reactor vessel to acceptable limits. It was first operated after the reactor vessel head was removed and after the IIF was installed on the reactor vessel flange. It was designed and used to batch-process the reactor vessel water through the existing SDS while concurrently returning reactor grade water to the reactor vessel. The system is shown schematically in Figure A-6 and is described as follows.

A submersible pump was supported from the IIF and took suction above the reactor vessel flange. The pump was sized such that its shutoff head was equal to the SDS design pressure to maximize flow through the SDS. The pump discharge was connected to the fuel transfer canal drain manifold via a rubber hose equipped with two-way shutoff and quick disconnect fittings. The manifold tied three systems together--the reactor building basement jet pump system, the FTC drain system, and the IIF processing system.

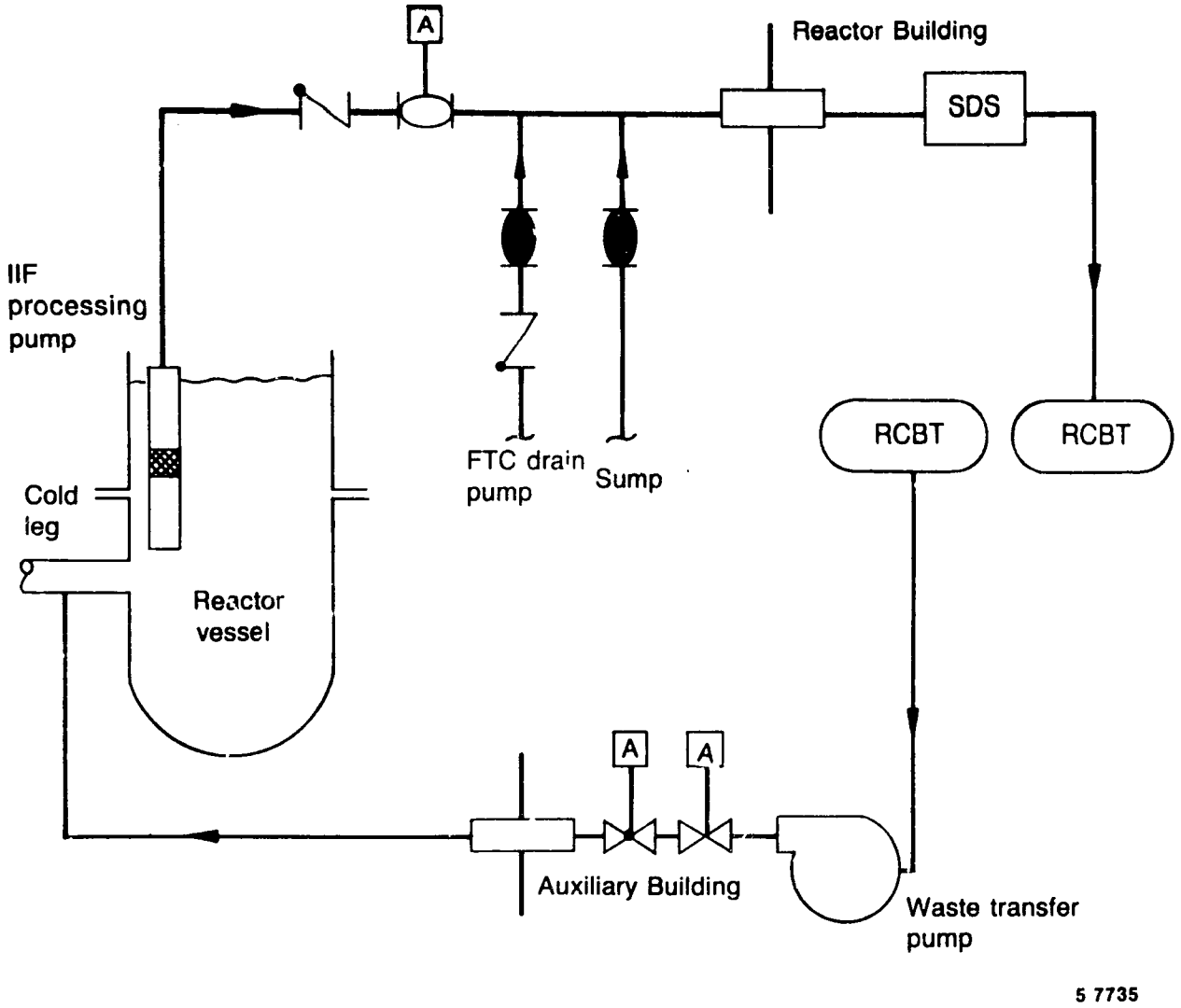

Figure A-6. IIF processing system.

From the manifold, and using existing piping, water was routed through reactor building penetration R-626 and fuel handling building penetration 1551 to the SDS. The SDS is basically an ion exchange system designed to remove soluble fission products. Maximum SDS throughput, which limited IIF processing, was 0.95 l/s. From the SDS, water was routed through existing piping to one of two reactor coolant bleed tanks (RCBTs), either WDL-T-1A or WDL-T-1C; WDL-T-1B was not available for use for IIF processing.

Concurrently, reactor grade water from either of the two RCBTs not being filled was pumped by one of the waste transfer pumps, WDL-P-5A/B, through existing piping to the reactor vessel. A control valve in the return line was connected to a controller to provide automatic level control in the IIF.

IIF Water Level Monitoring

Reactor coolant system water level indication was available from instruments connected to the decay heat letdown line external to the reactor building. This system included a reference leg to subtract nitrogen pressure or reactor building pressure when the head was vented. The system was installed prior to the camera insertion through the lead screw opening and was used during the underhead characterization program. Additional level monitoring capability, consisting of a tube standpipe connected to the RCS 2A cold leg, was provided during the drained condition. After installation of the IIF, an additional level monitoring system was provided. This system, which functions as a bubbler, was installed from the IIF platform (see Figure A-7).

The bubbler tube extended into the IIF and ended above the top of the plenum cover plate. A second tube, for compensation, penetrated the ventilated space under the IIF cover. Tubing connected the bubbler and compensation tube to the bubbler control panel, which was installed on the service structure access walkway handrail at the 353 ft-6 in. elevation. Local level indication and high and low level audible and visual alarms

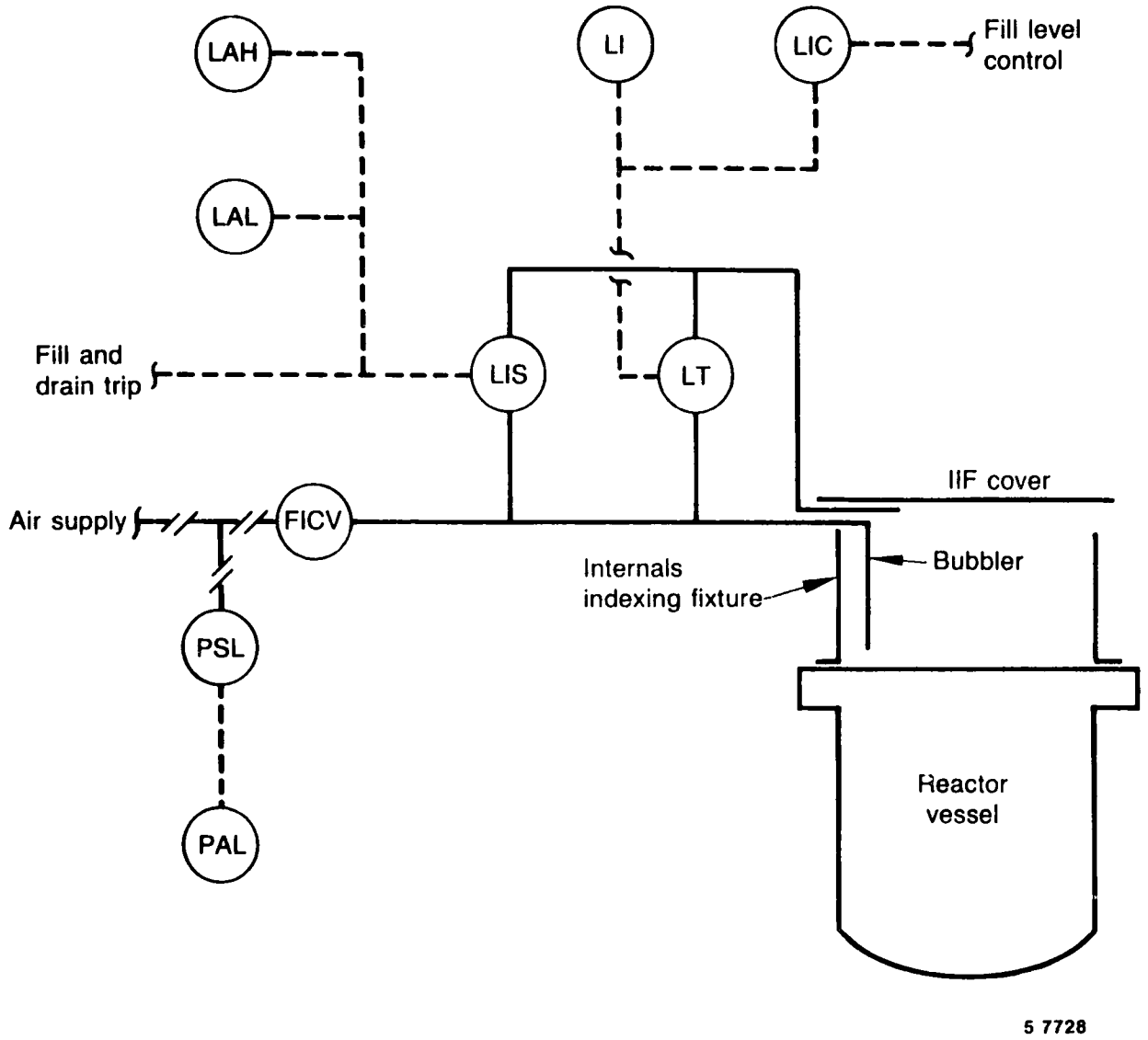

Figure A-7. IIF water level monitoring system.

were provided on the bubbler control panel. In addition, an electronic transmitter was provided to transmit an analog signal out of the reactor building.

Remote indication was provided on an SDS panel in the fuel handling building and on SPC-PNL-3 in the main control room. A proportional controller, which was located on SPC-PNL-3, was provided to maintain the level in the IIF automatically by varying the IIF fill flow. High and low level alarms were provided on the SDS panel and SPC-PNL-3. A low air supply pressure to the bubbler alarm signal was provided on SPC-PNL-3.

The range of indication for both the local and remote indicators was 0 to 25 kPa, which equates to a range in elevation of 322 ft-8 in. to 331 ft, and the high and low level alarms were set to actuate at elevations 327 ft-6 in. and 325 ft-6 in., respectively. The air supply pressure alarm actuated at 200 kPa.

Reactor Vessel Head Storage Stand

Recognizing potential difficulties and excessive radiation exposure in placing the head on the storage stand using the normal handling methods, possible alternatives were investigated. The expected high radiation levels of the head precluded any sighting or tie-line operation close to the head. Also, the concept of using a "bag" under the head for contamination control during head transport to the storage stand made sighting for head alignment on the storage stand more difficult, even if proximate operation were possible.

The options investigated were:

- Modification of the stand
- Removal and replacement of the stand with simple steel supports
- The consequences of no changes.

The results of the investigation led to a recommendation that the existing storage stand should be removed and replaced with simple steel supports requiring minimum alignment of the head to the supports. Ultimately, other changes engineered in the field made the proposed head storage stand changes unnecessary.

Reactor Vessel Head Removal Rigging

The head removal rigging included the head and internals handling fixture assembly, the internals handling extension, the Dillon load cell and load cell rigging, turnbuckle pendant assemblies, lifting ring, and three lifting slings. The three slings were pinned and locked to the handling fixture and to the lifting lugs on the closure hand (see Figure A-8). These rigging devices, when assembled and attached to the polar crane, were used for removing the 157 tn head and service structure. The success of the lift was due in part to the many structural inspections, load tests, and analyses performed on the individual rigging devices prior to head removal. The components comprising the head removal rigging are described in the following sections.

Dillon Load Cell

The Dillon load cell used for head removal had previously been used for the successful 214 tn polar crane load test. The load cell would have provided any indication of the head binding to the vessel, as well as accurate final weights of the head and service structure.

Head and Internals Handling Fixture Assembly (Tripod)

The tripod was used as a load-spreading device during head removal. It supported the three new head removal slings while in turn being attached to the polar crane above. The tripod's structural integrity had been previously confirmed by an in-shop load test to 150% of its normal lifting load of 170 tn by Quality Control (QC)-performed structural inspections, by stress calculations based on as-built weld conditions, and by its use in the polar crane load test.

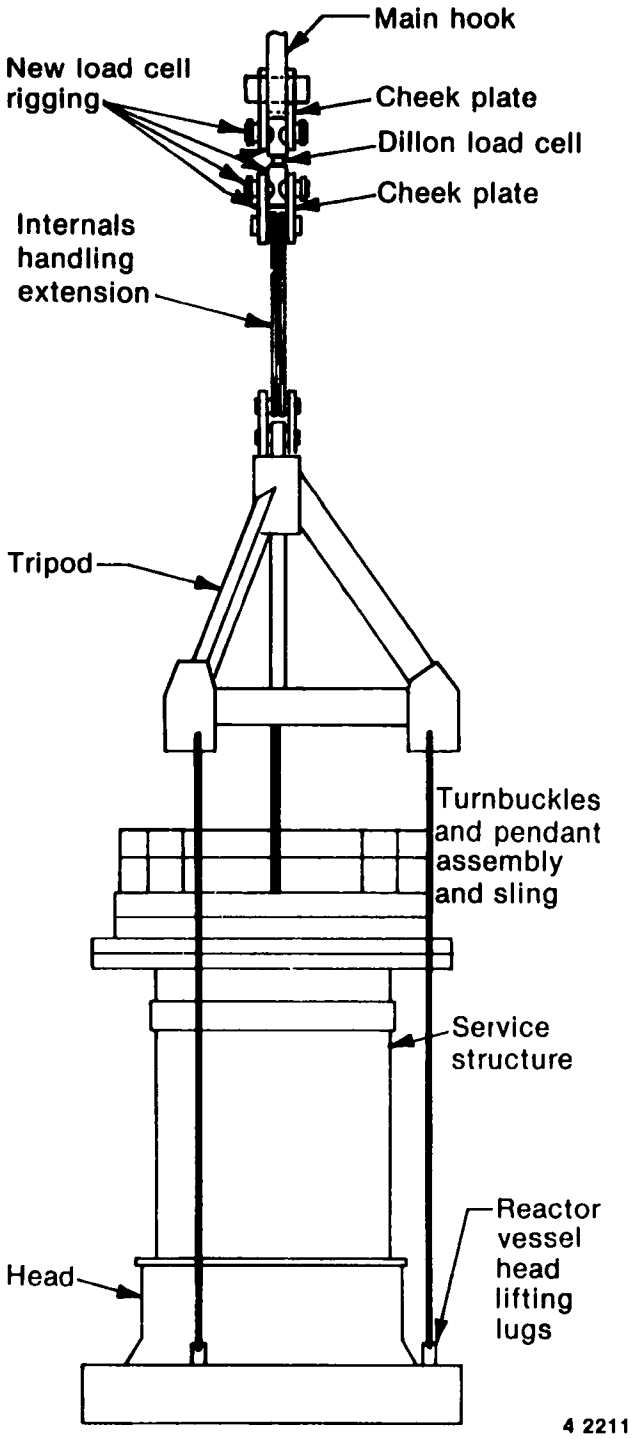

Figure A-8. Reactor vessel head removal rigging.

Internals Handling Extension

The internals handling extension was used as the connection rigging between the load cell and the tripod during head removal. Its structural integrity had been previously confirmed by QC-performed material inspections and by use in the polar crane load test. The internals handling extension was also shop-tested to 150% of its nominal lifting load of 170 tn.

Turnbuckle Pendant Assemblies

Two turnbuckle pendant assemblies were used to adjust the length of the new head slings to ensure levelness during head removal. Because of cracks discovered in the Unit 2 non-load-bearing turnbuckle pendant assembly antirotational welds, Unit 1 turnbuckles were used. The structural integrity of the turnbuckle pendant assemblies had been previously confirmed by QC-performed material inspections and by use in the polar crane load test.

Head Removal Slings

New slings for head removal were procured in lieu of inspecting and load testing the existing slings. The new slings had a minimum breaking strength of 417 tn; the socket end fittings develop the full breaking strength of the slings (100% efficient). The slings, with end fittings attached, were proof-tested by the manufacturer to 40% of the minimum breaking strength of 417 tn.

Head Lifting Lugs

The head lifting lugs are made from steel plate attached to the head by full-penetration welds. The structural integrity of the lugs was previously confirmed by QC-performed material inspection and by previous head removals and installations.

Canal Seal Plate Modifications

Head removal planning required that, as a contingency, flooding of the refueling canal during head removal be accommodated. Therefore, to ensure a long term positive seal between the reactor vessel and the refueling canal, and to eliminate the possibility of leakage into the reactor vessel cavity, the canal seal plate (CSP) was modified.

The modifications included installation of a new gasket/sealant system and addition of a clamping system to maintain positive contact between the gaskets and sealing surfaces. The CSP gasket system consisted of soft silicone gaskets installed between the CSP, canal, and reactor vessel contact surfaces. All CSP penetrations were caulked and all potential leak paths were embedded in silicone sealant.

The CSP gasket system was tested using a scale model at the manufacturer's shop. The system demonstrated no leakage with the gaskets alone under 200 kPa air and then water. After pouring the sealant, the tests were repeated, with the same acceptable results. In addition, extensive initial testing was conducted on the silicone sealant material to ensure proper bonding with the interfacing materials in the expected water environment.

Fourteen clamping dogs were installed on the underside of the inboard edge of the CSP to ensure proper sealing of a new gasket system design between the CSP and the reactor vessel seal ledge. As-built dimensions and elevations were also taken to ensure that the dogs would engage properly during the final installation of the modified CSP.

All parts of the dog assemby except the seal washer were fabricated of stainless steel to prevent corrosion due to long-term exposure to water. Self-aligning washers were used to accommodate any clamping eccentricity during installation.

After final installation of the modified CSP and its gasket system, the dogs were rotated into position under the reactor vessel seal ledge. The dogs were then engaged by torquing the dog bolts to a force equivalent to 30 kN/m on the CSP gasket when all dogs were engaged. Existing tie-down features (i.e., studs and nuts) were used to secure the outboard side of the CSP against its new gasket design. Figure A-9 depicts the final CSP design configuration.

Video Monitoring

Video monitoring for head lift provided a remote method for: (a) determining when the head was level during the initial stage of lift; (b) underhead viewing prior to lateral movement; (c) monitoring alignment with the guide studs on the head storage stand; and (d) verifying proper placement of the head on the storage stand.

For initial head lift, three cameras with pan and tilt, zoom, and quartz lights were positioned around the head to monitor three dial indicators that were attached to the head in line with the lifting lugs. The dial indicators were required to ensure the slope of the head did not exceed 0.05 cm per 30 cm during initial lift. To prevent keyway binding, adjustments to the turnbuckles were made to satisfy the slope criterion.

After a level lift was established, the cameras were used to examine the underside of the head for hanging debris and to determine when the head had cleared the guide studs. The head lift cameras were wired to monitoring and control stations on the 'A' D-ring. The monitoring and control stations contained monitors for each camera and controls for pan and tilt, zoom, and lighting.

Cameras were also provided on the head above studs holes 15 and 45 to monitor alignment with the guide studs on the head storage stand. These cameras were wired to the monitoring and control stations on the 'A' D-ring (head lift cameras disconnected).

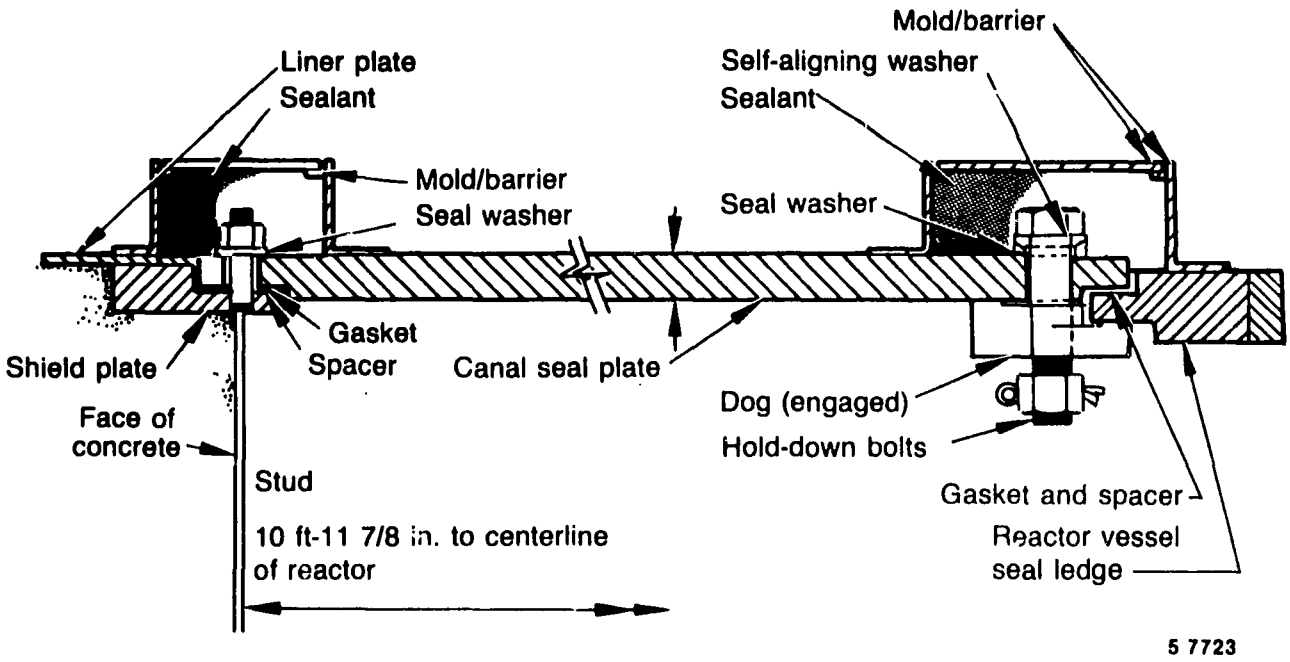

Figure A-9. Canal seal plate modifications.

After the guide studs on the head storage stand were engaged, the monitors in the monitoring and control station were connected to cameras with pan and tilt, and a quartz light was mounted on the storage stand; these were mounted in line with the guide studs to verify correct placement of the head on the storage stand.

Reactor Building Chilled Water

Addition of refrigerant chillers to the reactor building cooling water system was a major contribution to increased productivity of personnel working in the reactor building.

Two 93.6 tn refrigerant chillers and two chilled water pumps were added to the normal reactor building cooling water system. The chilled water addition was designed to maintain reactor building ambient temperature at 20°C.

The reduced temperature in the reactor building permitted longer stay times and reduced the number of entries for a given operation, thus lowering personnel exposure. The chillers also reduced personnel perspiration and enabled many tasks to be performed without the need for plastic suits (plastic suits were previously included in plans for reactor building work to reduce the potential for skin contamination from perspiration effects). This allowed head removal tasks to be performed without body cooling or ice vests.

TOOLS AND SUPPORT SYSTEMS

Internals Indexing Fixture Modifications

Under normal refueling conditions, the IIF to reactor vessel flange mating surface is left as a simple metal-to-metal seal without concern for exchange of water between the IIF and the water surrounding it. Given the special circumstance of the TMI-2 defueling, a leak-tight seal at this mating surface was required. This seal enabled filling the IIF with water for shielding without flooding the entire canal. It also isolated the more contaminated IIF/reactor vessel water from the rest of the canal water if contingency filling of the refueling canal were required.

Ten equally spaced tie-down clamps were installed on the reactor vessel flange to prevent leakage of water from the IIF into the refueling canal during plenum removal. The IIF tie-downs secured the modified IIF to the reactor vessel flange, while also providing a clamping force on the IIF flange gasket should the plenum bind on the IIF during removal.

The tie-down assembly consisted of a steel plate, 2.5 cm-diameter bolt, self-aligning washer, flat washer, and cotter pin. The tie-down plates were fabricated from carbon steel and epoxy-coated to prevent corrosion. The tie-down bolts were fabricated from stainless steel, and were 2.5 cm in diameter to match the existing tapped holes in the reactor vessel stud hole seal plugs. The self-aligning washers were provided to accommodate any tie-down eccentricity and to prevent grinding of the bolt threads during installation.

The IIF gasket system consisted of a single molded silicone gasket and stainless steel spacers placed under each dog. The gasket was developed to remain soft and pliable to enable it to seal under minimum force. The spacers prevented overcompression and damage to the gasket. The position of the gasket with respect to the O-ring seal grooves in the reactor vessel flange was identified as an important concern early in the design phase. Tests were developed and conducted at the manufacturer's shop to establish

the gasket sensitivity to positioning and to establish optimum gasket positioning. This testing also established the load required to seat the IIF on the spacers and the gasket's sensitivity to debris. The tests demonstrated that the gasket performed well when as much as 5 mm out of position, that it allowed the IIF to seat on the spacers under the load of the IIF alone, and that it was sensitive to debris only if the debris bridged the width of the gasket.

The IIF tie-downs were designed to be installed from the canal floor. However, if required due to radiological conditions, the tie-downs could be installed remotely from the IIF cover platform or from the 347 ft-6 in. elevation. To assist in remote installation, the tie-down bolt head was designed to interface with existing long-handled tools, and the end of the bolt was fabricated with a tapered lead-in. In addition, the tie-down assembly was designed to be held together as one unit by a cotter pin installed through the bolt body. When the tie-downs were in place, they were set by torquing the tie-down bolts to a force equivalent to approximately 10 kN/m on the IIF flange gasket Figure A-10 shows the final IIF design configuration.

Internals Indexing Fixture Cover

Following installation of the modified IIF, a cover was placed on top of the IIF to provide a work area for personnel to perform post-head-removal activities in and around the reactor vessel. The IIF cover was designed to minimize interferences with the installation of long-handled tools and their planned operations. The IIF cover will be removed prior to plenum removal.

The IIF cover assembly (Figure A-11) consisted of fabricated steel shapes, removable cover plate frames, and a plastic closure skirt. All cover assembly items were sized to fit through the reactor building personnel air lock, and were designed to be readily reassembled on the floor at the 347 ft-6 in. elevation

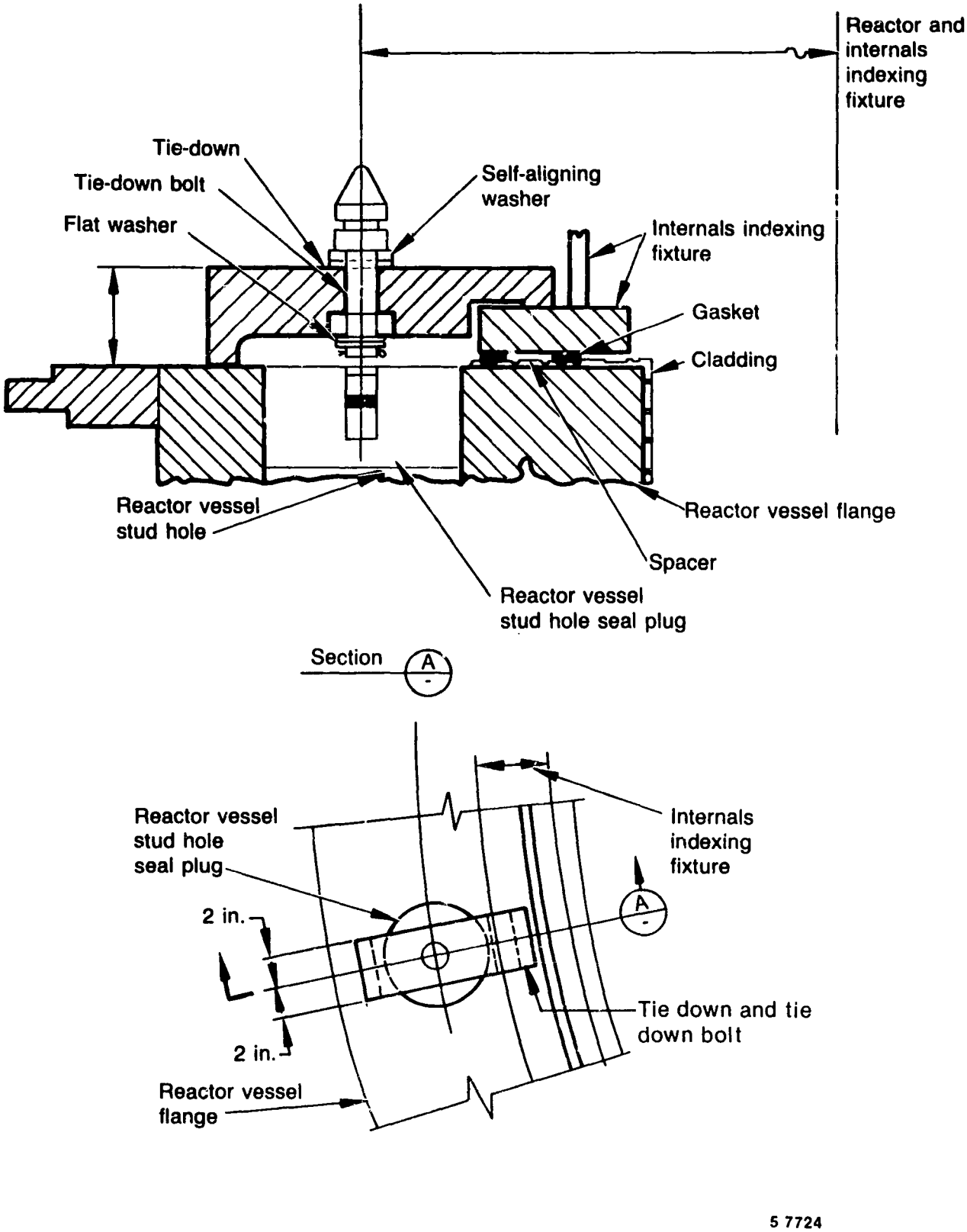

Figure A-10. IIF modifications.

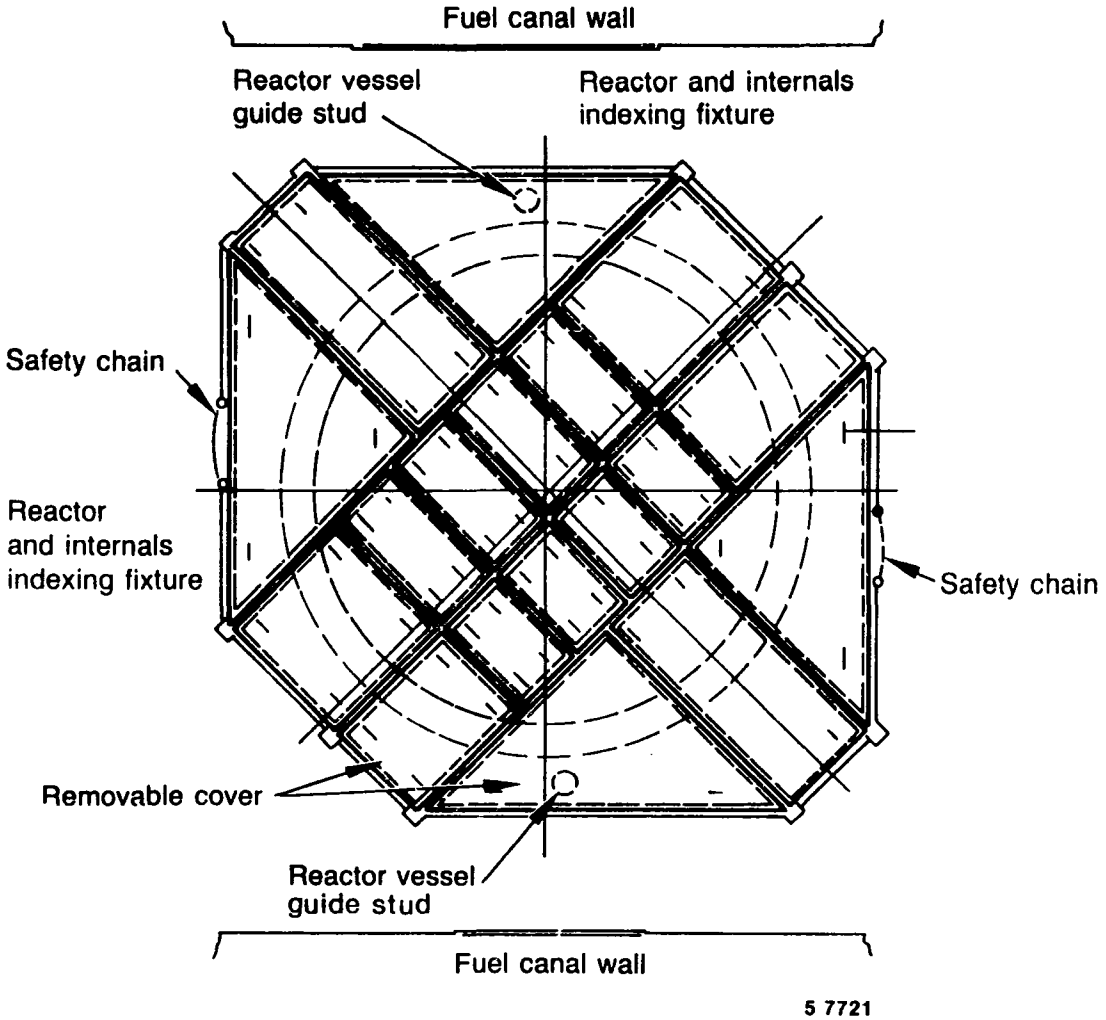

Figure A-11. IIF cover.

The IIF cover was supported on top of the IIF by fabricated stainless steel wide-flange shapes. The removable cover plate frames were fabricated from stainless steel plates and were placed on top of the shapes. The removable frames were designed to contain up to 5 cm of lead shielding to minimize radiation exposures to personnel working on the cover (the IIF cover was installed with 2.4 cm of lead). A plastic enclosure skirt was installed from the top of the perimeter of the shapes to the top portion of the IIF barrel to prevent the spread of airborne radioactive contamination from the reactor vessel.

The IIF cover assembly was installed using a special lifting rig (shown in Figure A-12) as a single unit, with the bubbler system, the removable cover plate frames, and lead shielding in place. The IIF cover lifting rig consisted of carbon steel tube shapes and stainless steel attachment rods, and was designed to be brought into the reactor building through the personnel air lock in four equal sections. The rigging sections were then reassembled and attached to the IIF cover. When in place on top of the IIF, the total weight of the IIF cover assembly was approximately 16.5 tn. The IIF plastic enclosure was then installed using drawstrings attached to the plastic fabric. The allowable live load during the operational period of the IIF cover was 4.8 kPa.

Contamination Control Barrier/Ventilation System

A contamination control barrier structure and ventilation system was designed to limit radiological airborne releases from the reactor vessel during the period following head removal and prior to installation of the IIF. The contamination control barrier design consisted of a metal frame supporting a plastic cover which acted as a tent. A ventilation system was designed to maintain this tent at a slightly negative pressure. This system, shown in Figure A-13, consisted of flexible ducting and a portable high efficiency particulate air (HEPA) filtration unit. The filtration unit (Figure A-14) was to be located out of the fuel transfer canal on the 347 ft-6 in. elevation of the reactor building. The discharge of the ventilation unit was pointed away from workers in the building.

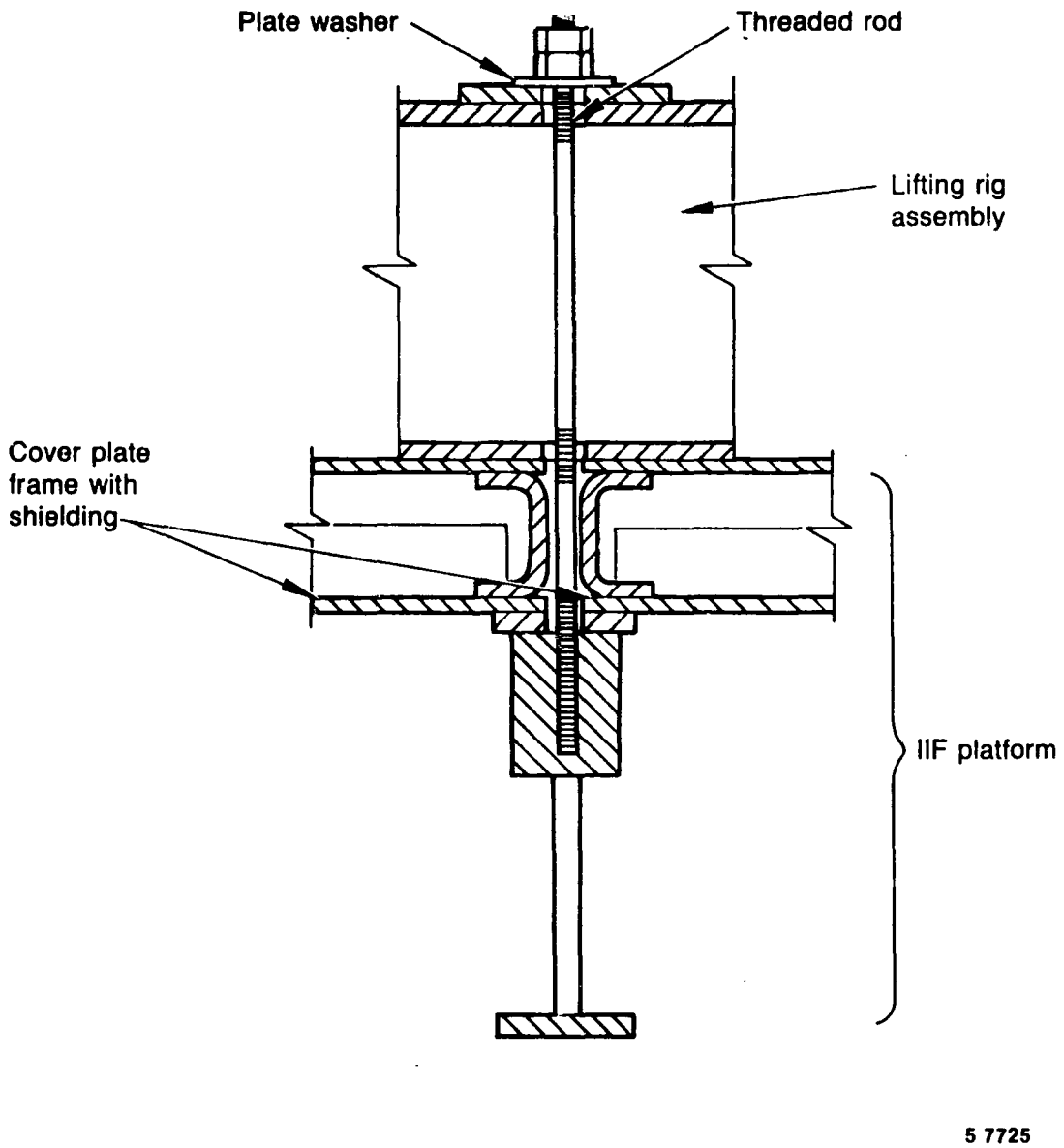

Figure A-12. IIF cover lifting rig.

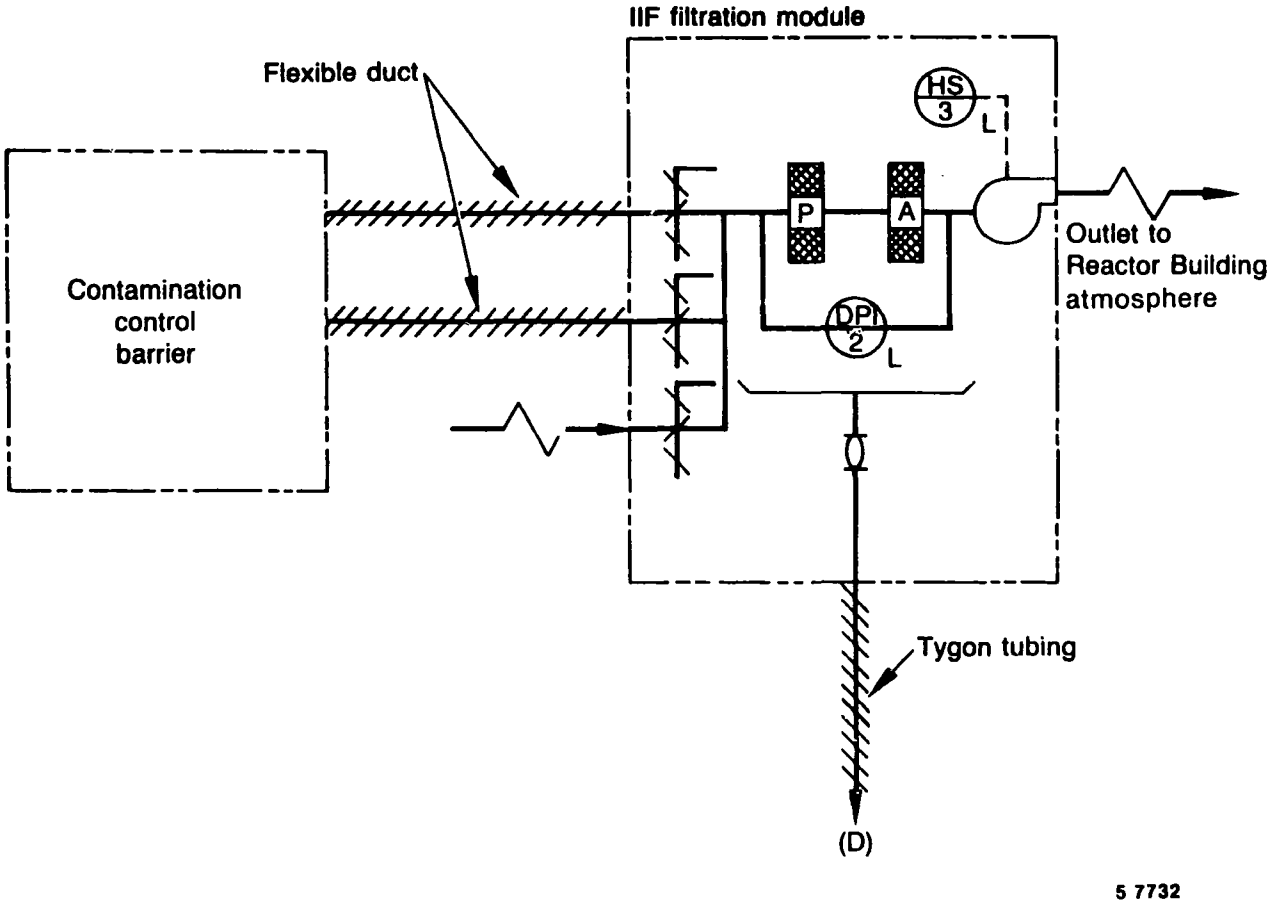

Figure A-13. Contamination control barrier ventilation.

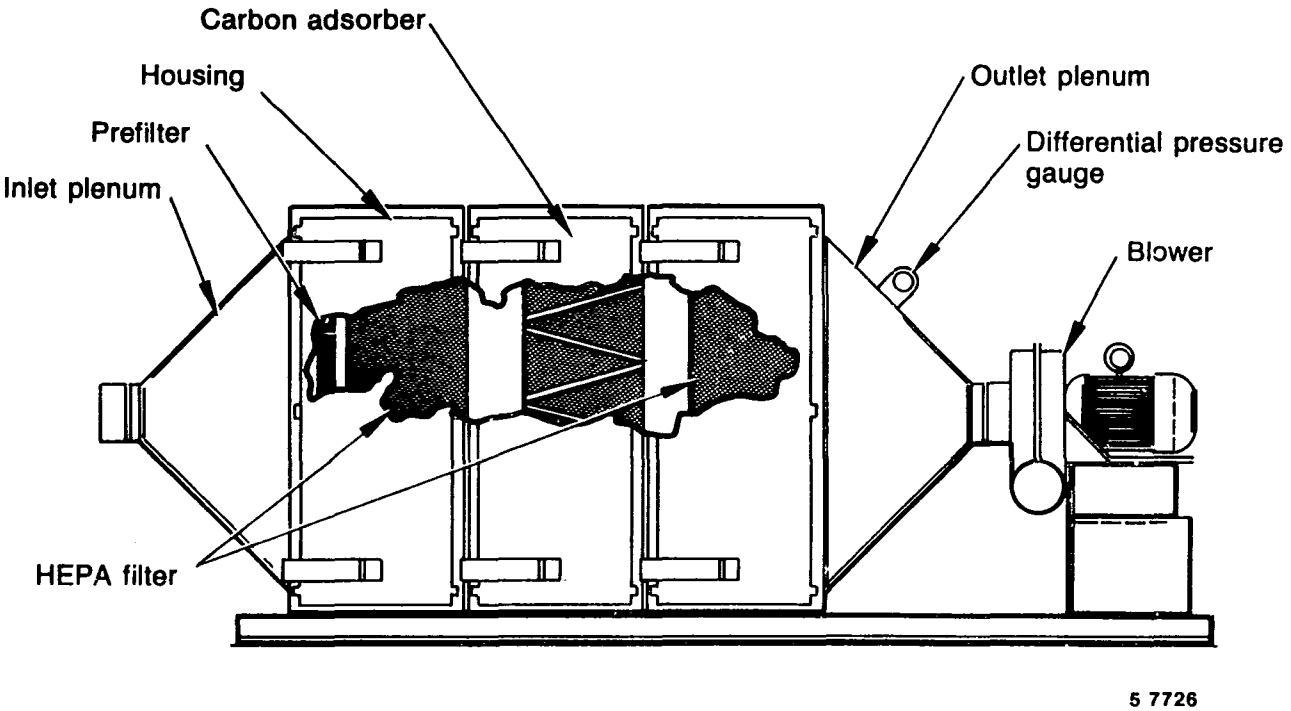

Figure A-14. HEPA filtration module.

The contamination control barrier and filtration system was a contingency provision for head removal. Due to the short time period that actually elapsed between head removal and IIF installation, plus the favorable radiological conditions, this system was not installed.

Head Removal Tools

For normal operations such as refueling, the head is removed using a set of standard plant tools in accordance with standard operating procedures. The unique conditions following the accident required that the adequacy of the existing tools be evaluated and modified, new tools provided, and plans implemented for developing additional tools as needed. Factors affecting decisions on head removal tools included:

- The radiation/contamination environment in which the tools would be operated
- The effects of the accident and the post-accident environment on the components to be manipulated
- The disposition of tools and components and the final plant configuration following head removal.

Stud Tensioners

The stud tensioners were modified with the addition of a motorized nut runner. This modification was implemented to make the radiation dose from this operation as low as reasonably achievable (ALARA) by decreasing both the time and the physical effort involved. A special test block was provided for on-site proof testing and for training operators.

Stud Hole Preparation Tools

After removal of the studs from the vessel flange, the empty threaded stud holes were prepared by chasing the threads, cleaning the hole, and then filling the hole with a rust preventative fluid. These operations were performed while the head remained on the vessel; tools long enough to reach down through the head flange were provided.

Stud Handling Tool

A double-bail lifting tool was designed to transfer the loosened reactor vessel stud from the head to the stud storage rack. Although the studs were loosened and parked on the reactor vessel flange (i.e., not removed), this tool was provided to simplify operations associated with transfer of the stud from the service structure hoist to an auxiliary lifting device for placement in the stud storage racks.

Stud Hole Seal Plugs/Guide Studs

Stud hole seal plugs were provided to protect the threads in the reactor vessel flange following head removal. The plugs were specifically designed to be installed with the reactor vessel head still in place, and to provide special features for later use as equipment anchor points. Therefore, each plug was furnished with a threaded hole for securing the IIF to the reactor vessel flange. The stud hole seal plug is depicted in Figure A-15.

The original reactor vessel head guide studs were replaced with modified guide studs. The modified guide studs were shorter to provide an earlier disengagement of the head from the stud. They were also smaller in diameter to ensure that no binding would occur between the head and the stud. Two of the stud hole seal plugs were used to support these modified guide studs. Figure A-16 depicts the modified guide stud.

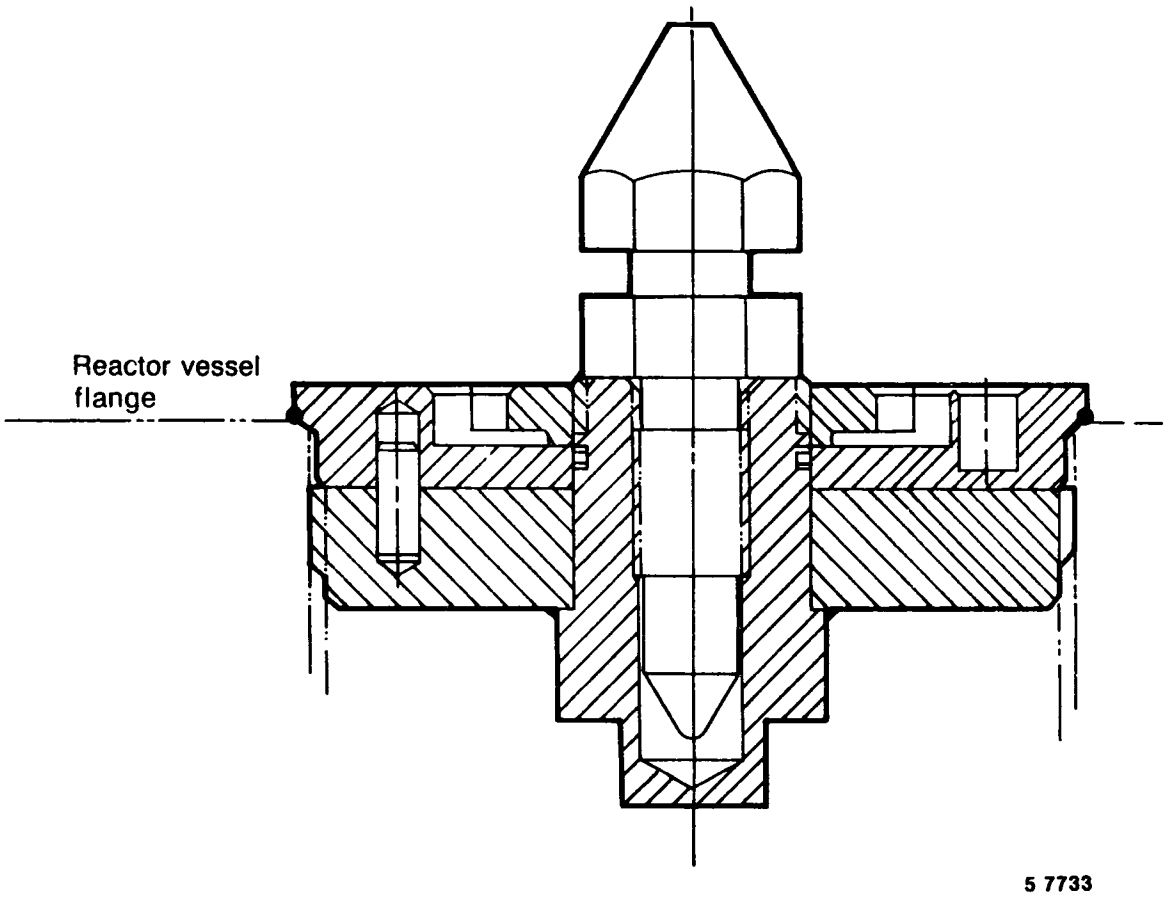

Figure A-15. Stud hole seal plug assembly.

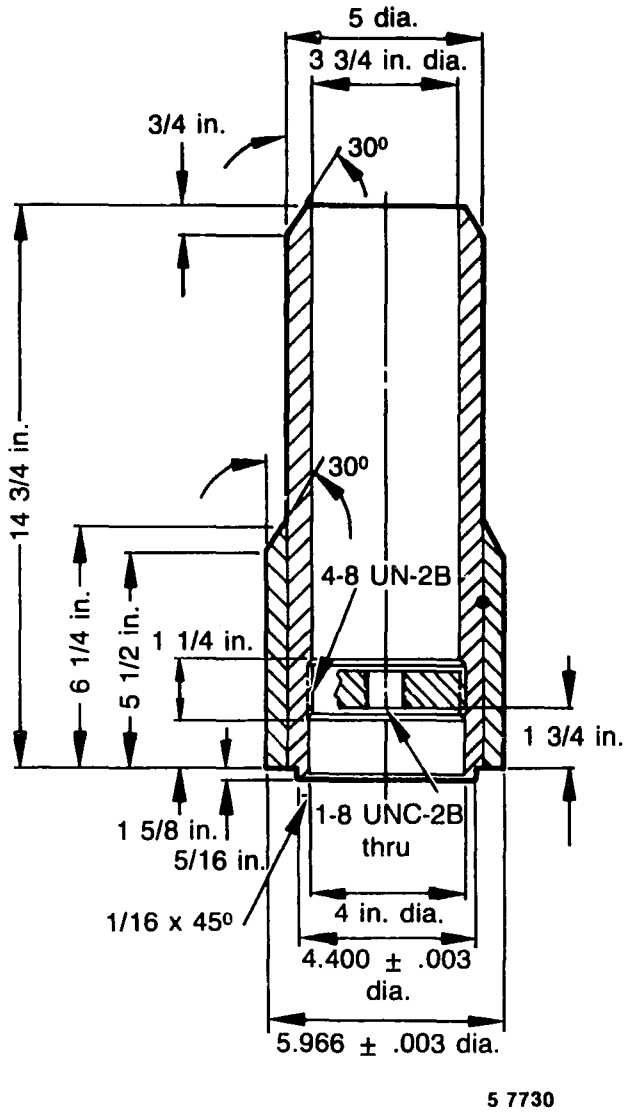

Figure A-16. Modified guide stud assembly.

The change in guide stud size also required fabrication of IIF bushing inserts to accommodate the smaller studs and ensure proper alignment of the IIF. One of the IIF bushing inserts was machined to an elliptical shape to compensate for any radial misalignment between the studs and the bushings due to reactor vessel flange and IIF temperature differences. The modified IIF bushings are depicted in Figures A-17 and A-18.

Contingency Planning

A number of engineering studies were undertaken to address conditions that had the potential to cause delays in the head removal schedule. These conditions were generally evaluated in terms of potential occurrences and the hardware, tools, or procedures that could be applied for those occurrences.

Jacking Equipment and Wedges

Equipment was designed to jack the head through the first 6 cm of vertical travel, and to provide a system of wedges to prevent the release of the head for any circumstance. This system was designed to lift the head in a level attitude, eliminating potential binding between the reactor vessel and head key/keyway surfaces. These items were ultimately judged not to be required; adequate control of the lift was afforded by turnbuckle adjustment, and analysis showed that no thermal distortion of the reactor vessel head occurred.

Underhead Flushing System

In an effort to make head removal more manageable from a radiation and contamination standpoint, design of an underhead decontamination system was pursued. This system was intended to remove particulate and other radiation source material and to help reduce the likelihood of airborne radioactivity distribution during head removal.

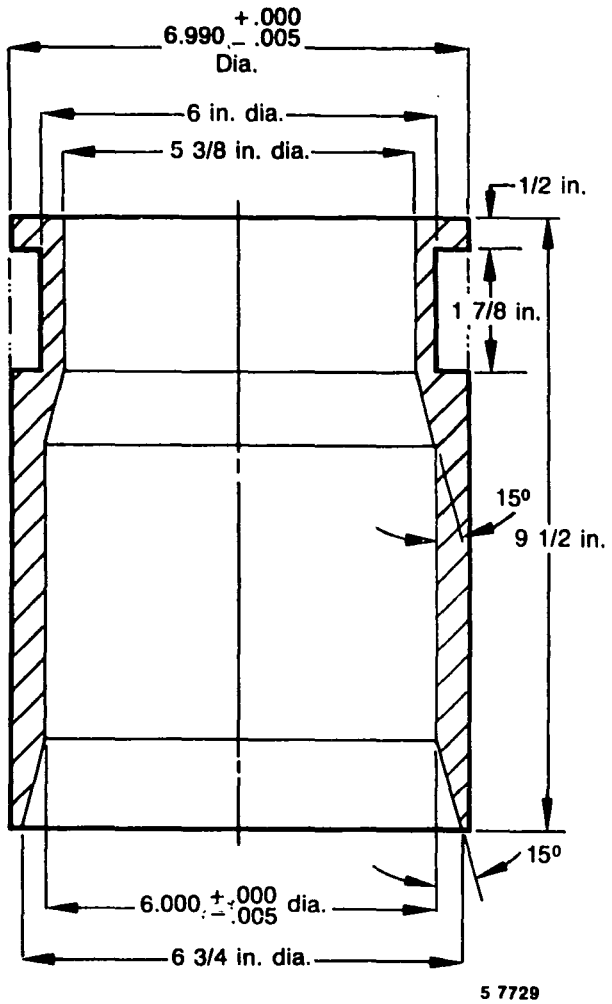

Figure A-17. Modified IIF guide bushing--normal.

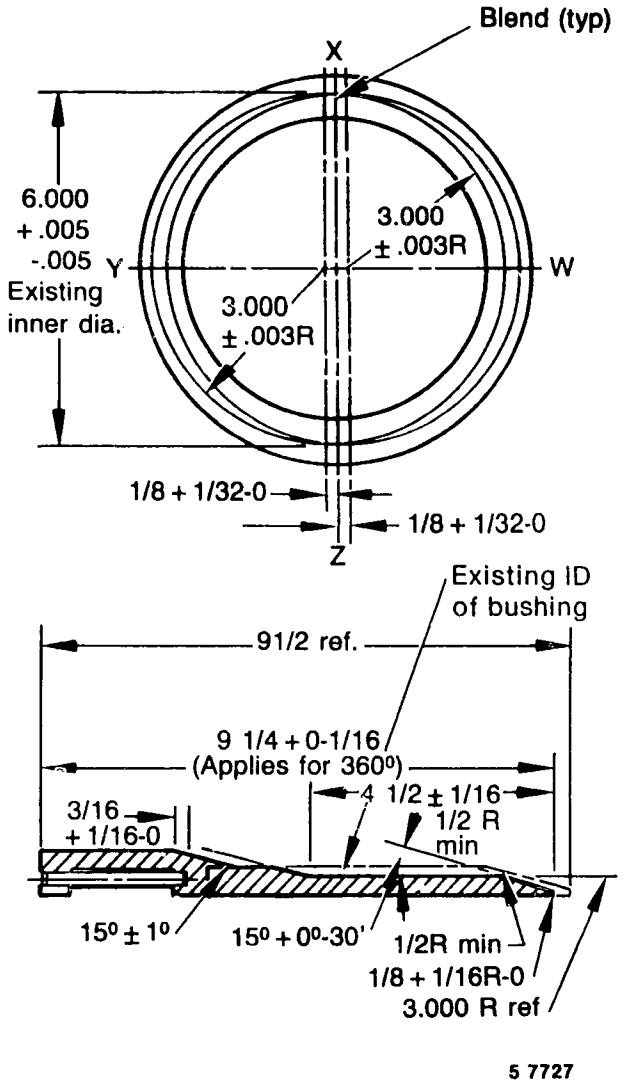

Figure A-18. Modified IIF guide bushing--elliptical.

Through a joint effort by Electric Power Research Institute (EPRI), GPU Nuclear, and the Department of Energy (DOE), a flushing system was developed. The system, shown in Figures A-19 through A-21, comprised a high pressure pumping unit, segmented cable nozzle directing units, and a hose management system. A mock-up unit for testing and training was also developed.

Based on underhead inspections and radiation surveys, which resulted in identification of only small amounts of debris, it was determined that the exposure required to perform the flush would offset any reduction in dose rates obtained. Therefore, the underhead flushing system was not installed.

Stuck Nut Study

The potential for encountering a stuck nut (i.e., a nut that could not be moved by the nut runner on the stud tensioner) was evaluated. The solution proposed was to use a stud heater to relieve the tension on the stud, followed by application of mechanical force to relieve binding.

Head Warpage Study

The potential for overstressing either the studs or the threads in the vessel during the detensioning cycle was evaluated. Results of this study showed that head warpage was unlikely.

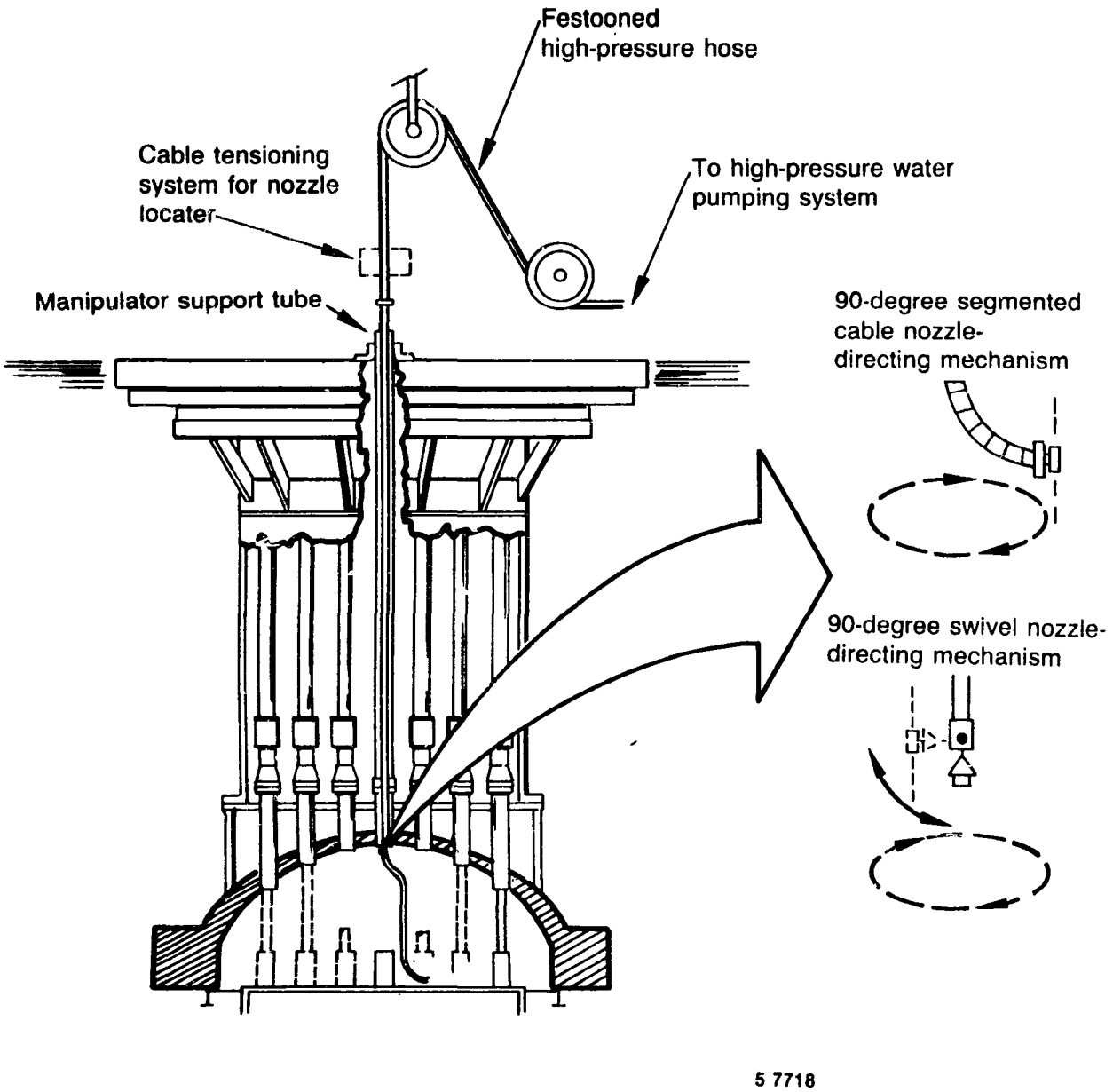

Figure A-19. Underhead flushing concept.

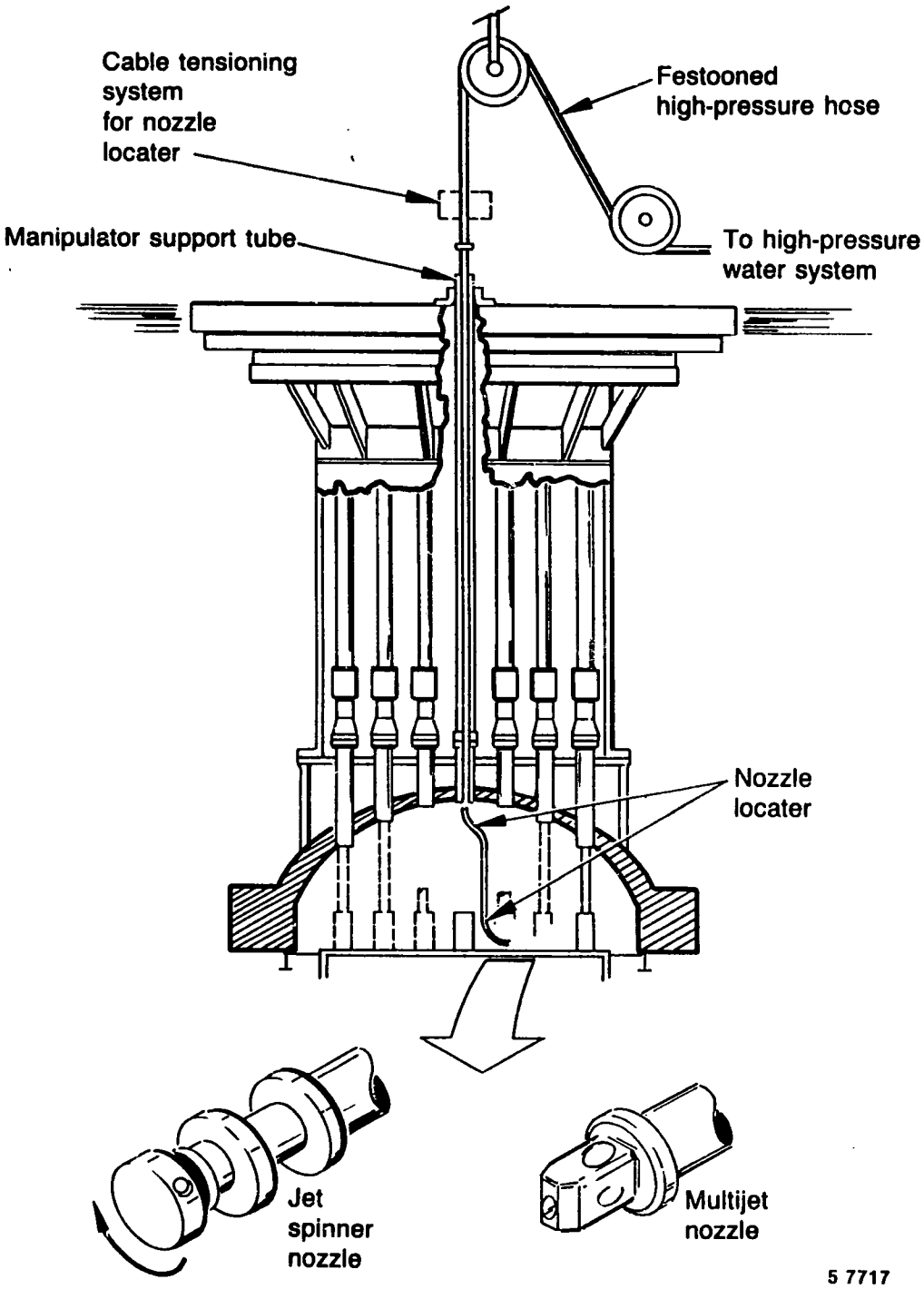

Figure A-20. Plenum plate flushing concept.

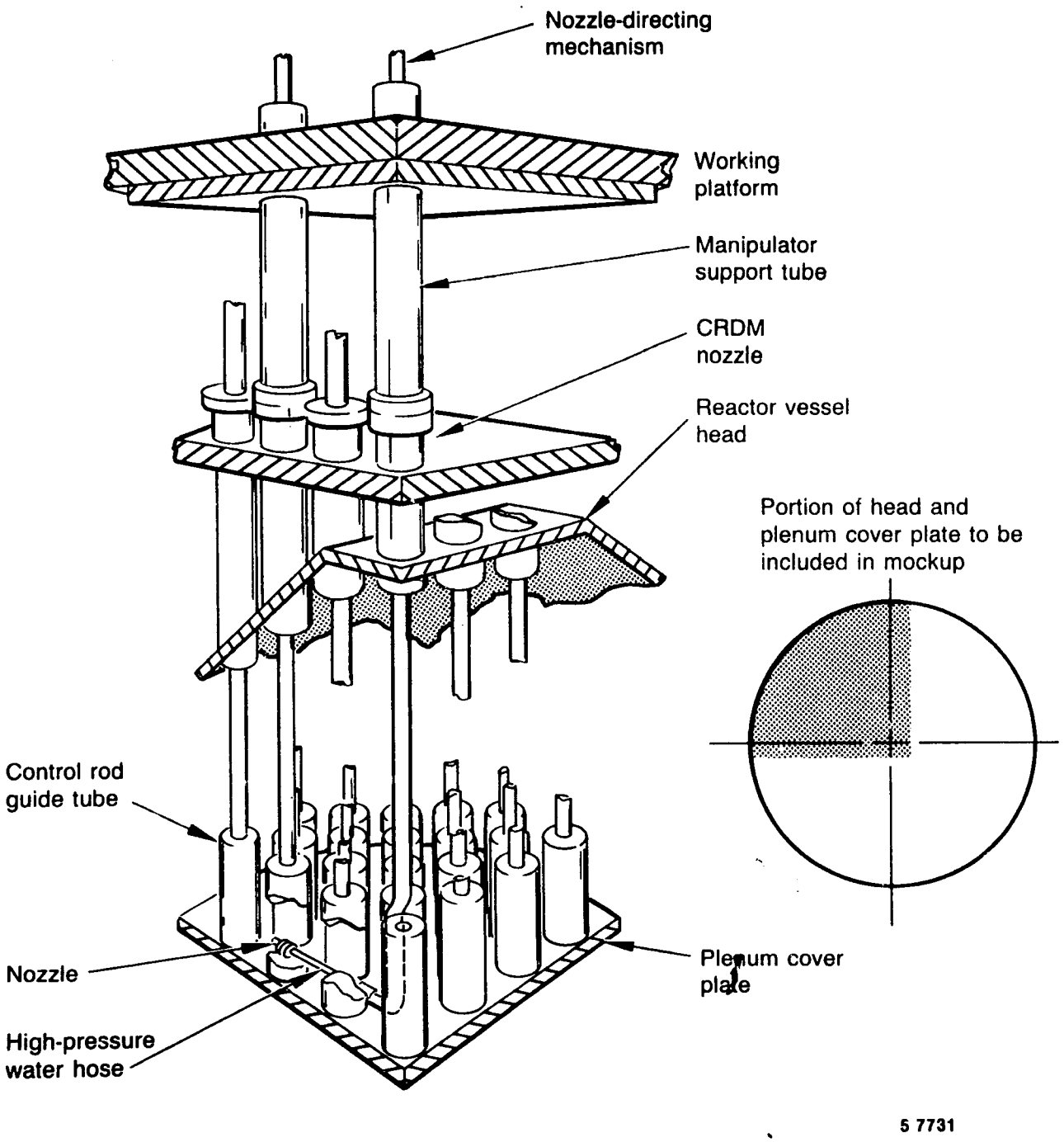

Figure A-21. Reactor vessel head, plenum plate, and guide tube mockup.

RADIOLOGICAL CONSIDERATIONS

Radiological Predictions

Exposure Estimates

The collective personnel radiation exposure to workers during the head removal evolution was estimated. The estimate was developed based on projected labor requirements and reactor building exposure rates for each phase of activities associated with head removal.

Task	Estimated Hours	Estimated rem
Head lift preparations	1170	188
Reactor vessel preparations	525	90
Head lifting and storage	865	210

The labor estimate was for time in the reactor building. The dose for radiological controls support was not included in the above figures. From a review of historical data, it was assumed that the dose for the radiological controls group would be 20% of that accumulated by other groups in the reactor building. Based on this, the estimate for radiological controls support was 98 rem for the head removal program, and the total for all groups was estimated at 586 rem.

The dose estimates were calculated using the following assumptions regarding expected radiological conditions in the reactor building:

- Average general area dose rates for the 347 ft-6 in. and 305 ft elevations would be 100 mR/h and 300 mR/h, respectively.
- Before head lift, the average general area dose rate around the head and service structure would be 200 mR/h.

- During actual head removal activities, the general area dose rate for individuals involved with the lift would be 500 mR/h.

- The dose rate around the head and service structure would be 200 mR/h with the head on the storage stand.

Due to the uncertainty in the dose estimate and the radiological conditions that existed during the head lift activities, it was estimated that the total exposure could vary by up to 30%. Considering these uncertainties, the range of 410-761 rem was selected as the estimate for the performance of the head lift and transfer and for those activities in preparation for and directly supporting head removal including radiological controls support. Actual head removal-related exposures are reported in the main text of this report.

Dose Rates During Head Removal

Detailed analyses were performed to predict radiation dose rates throughout the reactor building during all phases of the head removal evolution. These dose rates are as follows, excluding background.

Location	Predicted Dose Rate
Canal area with the head off before IIF installation	10 to 300 R/h
Canal area after IIF filling	10 to 150 mR/h
Directly above the IIF, after filling, before platform placement	150 to 800 mR/h
On the IIF shielded work platform after placement	20 to 40 mR/h

Due to the high dose rates predicted between the time of head removal and IIF placement, all work tasks were designed to be performed semi-remotely from the top of the D-rings.

ALARA Provisions

During the planning stages of the head removal program, the principles of ALARA were considered as follows.

In studying the alternatives for removal of the reactor vessel closure head, ALARA was considered on a judgmental basis. Specific actions were taken in tools and equipment design to enhance performance of certain operations. In addition, operational sequences were reviewed and changed to allow performance of work in lower radiation areas.

Modifications to the hydraulic stud tensioners were made on three of the TMI units. The modification, a motorized engaging nut drive (MEND), has been shown to improve the rate of detensioning by a factor of three at other plants. Two stud tensioners were used for detensioning, and the third unit was used for training and as a spare.

Two new stud handling tools with air suspension features were procured for use in unthreading the studs from the reactor vessel flange stud holes. These tools have been used at other plants, and a reduction of time by a factor of three was realized for this operation.

The stud hole seal plugs and stud hole corrosion inhibitor were installed through the head flange stud holes before head lift rather than after head lift. This allowed the operation to be performed in a lower radiation field, since the reactor vessel head provided substantial shielding from the reactor coolant and the upper plenum.

The objective of minimizing occupa[illegible] exposure was a major goal in planning and preparation for all activities in the reactor building. The actions taken or planned towards meeting this objective are summarized in this section. Protective clothing and respirators were used as required to reduce the potential for radioactive external contamination and internal exposure to personnel.

Radiation exposures from individual tasks were maintained ALARA by a detailed radiological review by Radiological Engineering and by mockup training. The need for mockup training was determined on a case basis--the degree of difficulty and newness of the operation influenced the need for mockup training and the detail of the mockups.

Extensive planning of tasks to be conducted in radiation fields, coupled with personnel training, were used to reduce the time needed to complete tasks. Extensive use of photographs and the closed circuit television system inside the reactor building were used to familiarize personnel with the work area. The higher radiation areas were identified and the work was structured to avoid these areas to the extent practical. Practice sessions were used as necessary to ensure that personnel understood their assignments prior to entering the reactor building.

Sources of high radiation that could not be avoided during head lift activities were shielded. The service structure was shielded with lead blankets to reduce the radiation increase on the 347 ft-6 in. elevation from the contaminated lead screws. In addition, the head storage stand was shielded to reduce dose rates around the head storage area after transfer of the head.

The head removal monitoring and control station was located on top of the pressurizer missile shield, i.e., as far as practical from the storage radiation sources. This area was enclosed with hanging lead curtains to reduce further the collective radiation doses.

It was anticipated that airborne particulate radioactivity would increase somewhat after the head was removed from the vessel. To minimize the increase of airborne particulates, the following precautions were taken:

- A water spray system to wet the exposed plenum was made available.
- The head was bagged on the storage stand to control airborne radioactivity, as required by radiological conditions.

- The IIF was installed on the vessel as soon as possible after head removal. Once filled with water, it inhibited the release of airborne radioactivity from the exposed contaminated surfaces of the upper plenum. A water cleanup system was also available to minimize radioactivity dissolved in the water in the fixture.

- A large cover designed to suppress generation of airborne radioactivity from the underhead surfaces was installed under the head immediately after the initial lift, before transfer to the storage stand.

REFERENCES

1. Worsham, J. R. III et al, Methods and Procedures of Analysis for TMI-2 Criticality Calculations to Support Recovery Activities Through Head Removal, BAW-1738, June 1982.

2. Worsham, J. R. III et al, Verification of Criticality Calculations for TMI-2 Recovery Operations Through Head Removal,Addendum 1, BAW-1738, October 1982.

3. Worsham, J. R. III, TMI-2 Criticality Analysis for a Heavy Load Drop Accident In Support of Recovery Activities Through Reactor Vessel Head Removal, Babcock & Wilcox, 77-1146499-00, December 1983.

4. TMI-2 Decay Heat Removal Analysis, Babcock & Wilcox, April 1982.

5. TMI-2 Decay Heat Removal Analysis Rev. 1, Babcock & Wilcox, December 1982.

6. Safety Evaluation for First Pass Detensioning and Removal of Up to Five Studs, GPU Nuclear, Kange ltr 4410-83-L-0222 to Snyder, September 29, 1983.

7. Safety Evaluation Report for Removal of the TMI-2 Reactor Vessel Head, Rev. 5, GPU Nuclear, 15737-2-G07-102.

8. Safety Evaluation Report for the Operation of the IIF Processing System, Rev. 1, GPU Nuclear, 15737-2-G07-103.