LEGIBILITY NOTICE

A major purpose of the Technical Information Center is to provide the broadest dissemination possible of information contained in DOE's Research and Development Reports to business, industry, the academic community, and federal, state and local governments.

Although a small portion of this report is not reproducible, it is being made available to expedite the availability of information on the research discussed herein.

1

NOTICE

PORTIONS OF THIS REPORT ARE ILLEGIBLE. It has been reproduced from the best available copy to permit the broadest possible availability.

GEND-INF--031-Vol.2

DE84 015257

GEND-INF-031
Volume II

DISCLAIMER

This report was prepared as an account of work sponsored by an agency of the United States Government. Neither the United States Government nor any agency thereof, nor any of their employees, makes any warranty, express or implied, or assumes any legal liability or responsibility for the accuracy, completeness, or usefulness of any information, apparatus, product, or process disclosed, or represents that its use would not infringe privately owned rights. Reference herein to any specific commercial product, process, or service by trade name, trademark, manufacturer, or otherwise does not necessarily constitute or imply its endorsement, recommendation, or favoring by the United States Government or any agency thereof. The views and opinions of authors expressed herein do not necessarily state or reflect those of the United States Government or any agency thereof.

TMI-2 IN-CORE INSTRUMENT DAMAGE--AN UPDATE

Merlin E. Yancey
Richard D. Meininger
Lori A. Hecker

Published April 1984

EG&G Idaho, Inc.
Idaho Falls, Idaho 83415

Prepared for the
U.S. Department of Energy
Three Mile Island Operations Office
Under DOE Contract No. DE-AC07-76ID01570

DISTRIBUTION OF THIS DOCUMENT IS UNLIMITED

ABSTRACT

Additional in situ tests were performed during July and August 1983 on the in-core instruments located in TMI Unit 2. These tests were intended to reduce the uncertainty associated with early test data and better define the extent of damage in the reactor vessel. The condition of the self-powered neutron detectors and the location of newly formed thermocouple junctions suggests the possibility that significant damage occurred in the central area of the lower reactor vessel. The extension cables associated with the in-core instruments appeared to be in generally good condition.

ACKNOWLEDGMENTS

The authors wish to express their appreciation to Louis Mares, Tom Weir, and Mike Dinsel for performing the outlined testing.

CONTENTS

ABSTRACT ii

ACKNOWLEDGMENTS iii

NOMENCLATURE vii

INTRODUCTION 1

RESULTS OF PREVIOUS IN SITU TESTING 4

1983 IN SITU TESTING 6

EXTENSION CABLES 11

IN-CORE DAMAGE 15

GENERAL EXPECTATION OF DAMAGE 19

REFERENCES 22

APPENDIX A--A SUMMARY OF THERMOCOUPLE TEST DATA A-1

APPENDIX B--UPDATED IN-CORE THERMOCOUPLE LENGTHS B-1

APPENDIX C--SPND IN SITU TEST DATA 1983 ..... C-1

APPENDIX D--REACTOR GRID PROFILES SHOWING CONDITION OF IN-CORE INSTRUMENTATION D-1

FIGURES

1. Block diagram of in-core instrument assembly and associated cabling 2

2. Summary of in-core instrument conditions 5

3. In-core instrument seismic area 7

4. TMI-2 core map showing estimated core reduction in thermocouple lengths (ft) and area of maximum damage 17

5. Cross section of an in-core instrument assembly (as viewed toward the thermocouple junction), instrument tube, and instrument tube sleeve 18

D-1. Cross section of reactor at grid 8 showing active fuel area D-4

D-2. In-core instrument profile grid 1 ..... D-5

D-3. In-core instrument profile grid 2 ..... D-6

D-4. In-core instrument profile grid 3 ..... D-7

D-5. In-core instrument profile grid 4 ..... D-8

D-6. In-core instrument profile grid 5 ..... D-9

D-7. In-core instrument profile grid 6 ..... D-10

D-8. In-core instrument profile grid 7 ..... D-11

D-9. In-core instrument profile grid 8 ..... D-12

D-10. In-core instrument profile grid 9 ..... D-13

D-11. In-core instrument profile grid 10 ..... D-14

D-12. In-core instrument profile grid 11 ..... D-15

D-13. In-core instrument profile grid 12 ..... D-16

D-14. In-core instrument profile grid 13 ..... D-17

D-15. In-core instrument profile grid 14 ..... D-18

TABLES

1. Cable parameters 12

2. Characteristic impedances 14

A-1. Assembly 2 (H-9) A-5

A-2. Assembly 9 (G-5) A-6

A-3. Assembly 12 (L-6) A-7

A-4. Assembly 14 (N-8) A-8

A-5. Assembly 18 (L-11) A-9

A-6. Assembly 26 (E-11) A-10

A-7. Assembly 48 (O-12) A-11

B-1. Updated in-core thermocouple lengths--1983 ..... B-4

C-1. Assembly H-9 ..... C-6

C-2. Assembly G-5 ..... C-8

C-3. Assembly L-6 ..... C-10

C-4. Assembly N-8 ..... C-12

C-5. Assembly I-11 ..... C-14

C-6. Assembly E-11 ..... C-16

C-7. Assembly O-12 ..... C-18

NOMENCLATURE

C	Capacitance
°F	Degrees Fahrenheit
F	Farad
FEP	Fluorinated ethylene propylene
ft	Foot
H	Henry
Hz	Hertz
I	Inductance
in.	Inch
K	Dielectric constant
MΩ	Megohms
Ω	Ohm
SPND	Self-powered neutron detector
TC	Thermocouple
TDR	Time domain reflectometry
TMI-2	Three Mile Island Unit Two
Vdc	Volts direct current

TMI-2 IN-CORE INSTRUMENT DAMAGE--AN UPDATE

INTRODUCTION

The in-core instrumentation at Three Mile Island Unit 2 (TMI-2) consisted of 364 self-powered neutron detectors (SPNDs), 52 background detectors, and 52 thermocouples (Type K) located in 52 instrument assemblies distributed throughout the core for a total of 416 instruments. Each of the instrument assemblies contained one thermocouple (TC), one background detector, and seven SPNDs. Figure 1 shows a block diagram of the in-core instrument assembly and its associated cabling. The SPNDs were equal spaced throughout the active region of the core, while the thermocouples junction was located approximately 7 in. above the core. In situ testing of the in-core instruments was performed primarily in an effort to determine the general condition of the instrumentation. However, since the instrument assemblies entered the reactor from the bottom and passed completely through the active core, their condition also provided a possible means of determining the extent of core damage. Prior in situ testing by EG&G Idaho[1] indicated that all of the thermocouples and the majority of the SPNDs were damaged to some extent.

An analysis of the early data indicated that major damage had occurred to the entire core above the general level of the first and second SPND locations, namely 2.5 + 1.6/-0.0 ft from the base of the active core, and throughout the central area of the core. This estimate of damage was based mainly on the location of operational SPNDs as determined by the 1982 in situ testing. The location of newly formed thermocouple junctions showed a reduction in length, with a greater reduction in the central area of the core. However, uncertainties in the absolute length of the extension cable connecting the in-core assemblies in containment to the racks in the cable spreading room, where the in situ measurements were made, prevented the use of this data to improve on the SPND data.

The video quick-look data obtained in July 1982[2] confirmed extensive damage to the core with the documentation of the rubble and void; later probing has confirmed the rubble bed reached to a depth of 6.9 ft from the

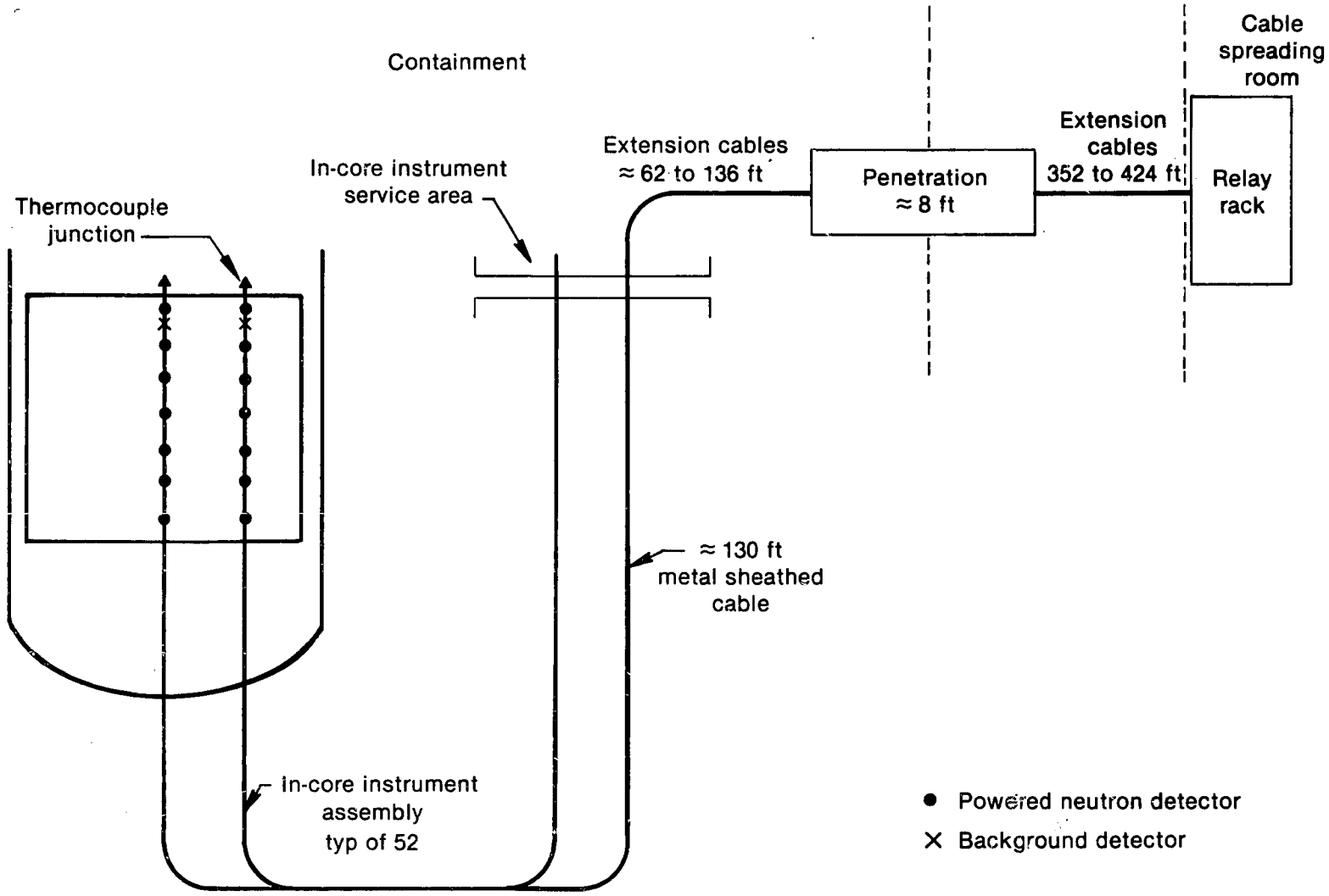

Figure 1. Block diagram of in-core instrument assembly and associated cabling.

top of the core in at least two locations. This information tended to increase the acceptance of the in-core instrument data and became a driving force to improve on the thermocouple data in order to improve the estimate of the extent of damage below the rubble bed. By obtaining accurate loop resistance measurement of the in-core thermocouple including the extension cabling and also an accurate measurement of the loop resistance of just the extension cables associated with each thermocouple, it should be possible to determine the actual loop resistance of the in-core thermocouples as they existed following the accident. Since the conductors of the thermocouples are relatively uniform in size, their total resistance is a relative indication of the thermocouples length. By comparing the postaccident data with the postinstallation data acquired during February 1978, it was possible to identify changes in the thermocouples length as a result of the accident.

Additional in situ tests were performed to determine the loop resistance of the extension cables associated with the in-core thermocouples and thus reduce the uncertainty in the previous estimates of in-core thermocouple lengths. This report discusses the test measurements made on seven out-of-service thermocouples and presents a re-evaluation of the earlier in situ test data with improved estimates of in-core thermocouple lengths. This report also presents the authors' estimate of what core damage they can infer.

RESULTS OF PREVIOUS IN SITU TESTING

Twenty-two of the 416 in-core detectors had an insulation resistance greater than 1000 MΩ and were considered to be operational. Most of the operational detectors were located in the lower regions of the active core area. All of the thermocouples had failed, with 24 of the 52 exhibiting new junctions. Calculations were made to determine the location of the new junctions based on known loop resistance data of the thermocouples and estimated loop resistance of the extension cables. Some of the new junctions appeared to be approximately 3.9 ft below the reactor base. These results suggested the need for additional in situ testing to be performed on the extension cables, since it was felt that any new thermocouple junctions that may have been formed during the accident should be located within the reactor vessel. The condition of the in-core instruments based on the 1982 in situ tests is summarized in Figure 2.

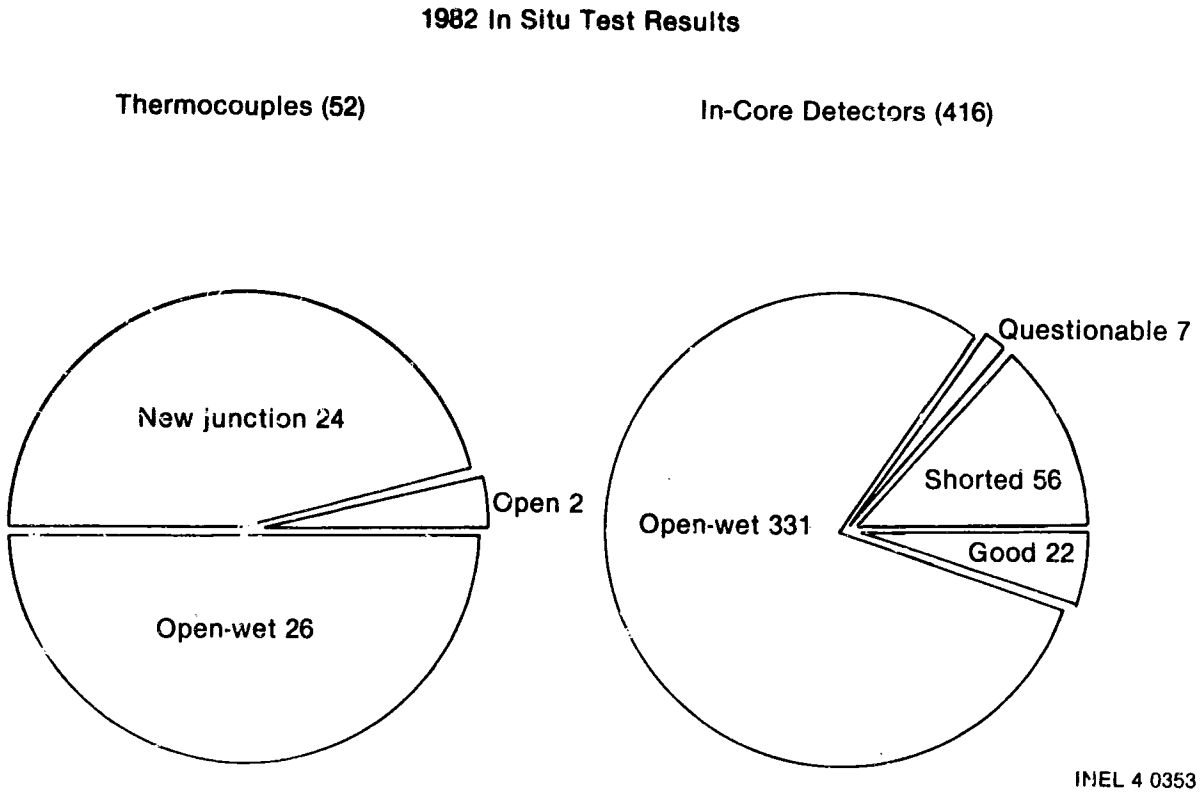

Figure 2. Summary of in-core instrument conditions.

1983 IN SITU TESTING

Additional in situ tests were performed during July and August 1983, to better characterize the extension cables connecting the in-core instrument assemblies to the cable spreading room. The in-core extension cable consisted of 18 conductors (9 pairs) 20AWG, twisted and paired with one of the pairs of chromel-alumel thermocouple extension wire, insulated with Teflon [fluorinated ethylene propylene (FEP)]. Each pair was shielded with aluminum-mylar tape. The pairs were cabled together with a single drain wire and jacketed overall with Teflon. The cables' insulation resistance was specified at 10,000 MΩ per 1000 ft at 500 Vdc minimum at 60°F.[3] These tests required that an entry be made into the reactor containment building. The extension cables were connected to the in-core instrument assemblies at the in-core instrument service area shown in Figure 3.

The test plan required that measurements be performed on the cable in the as-found condition or as previously measured; with the cables disconnected at the service area in an open and shorted condition; and in the as-left condition, again, as previously measured. For measurements in the as-left condition, the cables were returned to their as-found condition. Radiation levels at the service area made it necessary to decontaminate the area before personnel could enter and perform the outlined tasks. As-found measurements taken before and after decontamination indicated that the required decontamination had no effect on the as-found data.

In situ testing was limited to the instrument assemblies in which the thermocouples were considered to be out-of-service by General Public Utilities, since a plant operating specification would be violated by disconnecting the cables from the instrument assemblies. The seven assemblies which were available for additional testing included H-9(2), G-5(9), L-6(12), N-8(14), L-11(18), E-11(26), and O-12(48). The following in situ test measurements were performed.

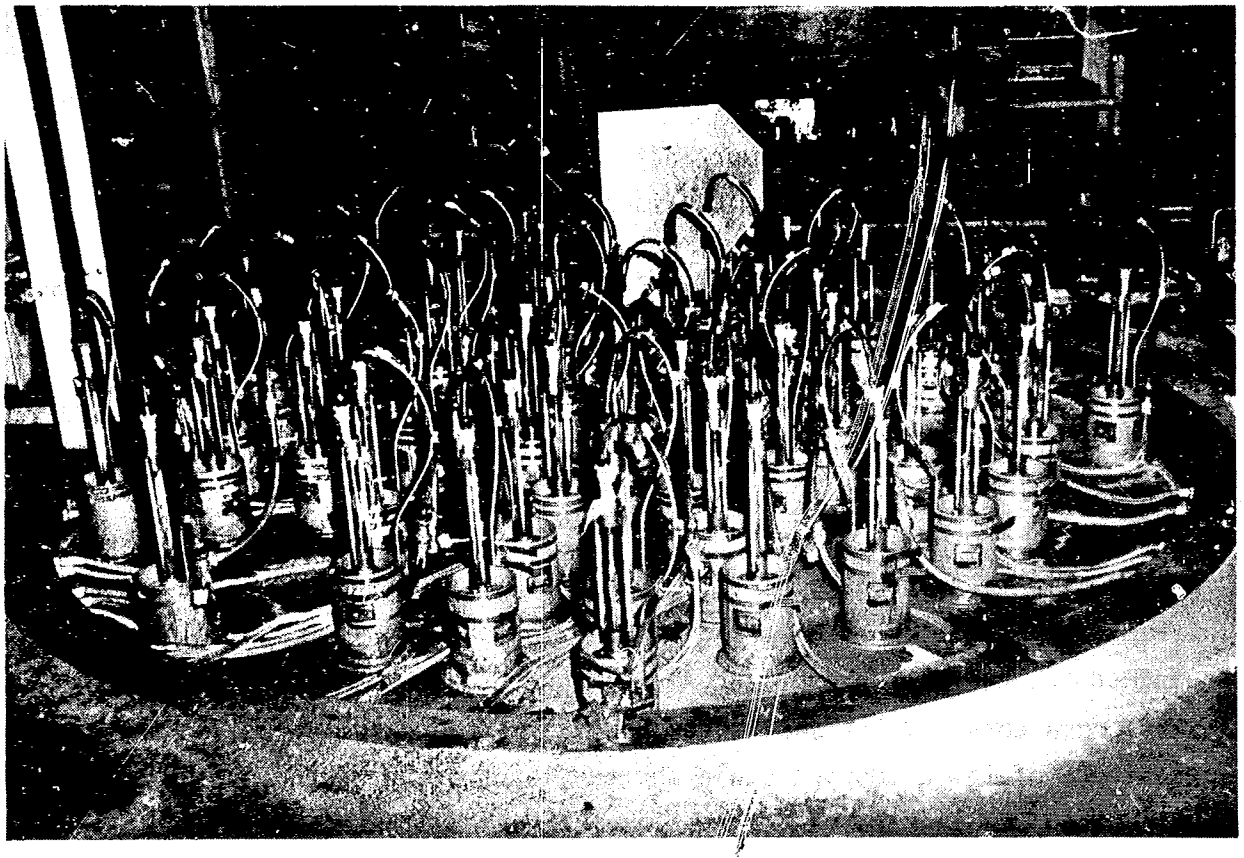

Figure 3. In-core instrument seismic area.

1. Loop resistance, capacitance, time domain reflectometry (TDR), and resonant frequency measurements on the cable in the as-found condition; i.e., including all cabling from the containment wall to the new junction internal to the reactor vessel.

2. Insulation resistance, capacitance, TDR, and resonant frequency measurements on the extension cable with its end open at the in-core service area.

3. Loop resistance, inductance, TDR, and resonant frequency measurement on the extension cable with its end shorted at the in-core service area.

4. Loop resistance, capacitance, TDR, and resonant frequency measurements on the instrument assembly in the as-left condition; i.e., the damaged instrument assembly with a new junction internal to the reactor vessel.

In situ testing was performed during July and August 1983. A summary of the thermocouple test data is included in Appendix A. Measurements were obtained between the Chromel and Alumel conductors and between each of these conductors and the sheath (ground). The tabulated data list the loop resistance of the extension cable and the in-core thermocouple as measured during the 1983 in situ tests, the insulation resistance, and loop resistance of the extension cables running between the in-core instrument service area and the relay cabinets where the test measurements were made. Based on the resistance per foot values obtained from a 10-ft section of thermocouple extension cable, the length of the extension cable was calculated and shown in Appendix A. The measured loop resistance data for the extension cables were compared with the calculated loop resistance data used in the 1982 analysis. Postinstallation loop resistance data were available on each of the thermocouples and were used to estimate a per foot resistance value for each of the thermocouples. The difference between the measured loop resistance and the calculated loop resistance was used with the estimated per foot resistance of the thermocouple to determine an estimated error in the calculated thermocouple lengths as shown in Appendix A. These limited data indicated that the values of resistance for

the extension cable used in the earlier analysis could account for an adjustment of from 3 to 5.5 ft in the estimated lengths of the in-core thermocouples as reported in Reference 1. The variation in this adjustment (5.5 ft - 3 ft = 2.5 ft) is taken as the uncertainty of our correction and is reported as ± 1.25 ft.

The new resistance data in Appendix A were averaged for the extension cables and then compared with the pull sheet cable lengths, resulting in a correction factor of 13.65% in the calculated extension cable resistance. The results of this correction, when applied to all of the in-core thermocouples, are shown in Appendix B. These data have an uncertainty of ± 1.25 ft on the estimated location of the apparent (new) junction. All of this uncertainty comes from the pull sheet cable length uncertainty. Instrumentation error is negligible when compared to this.

Some of the thermocouples with open junctions exhibited a short between one or both of the conductors and the metal sheath. In these cases, the conductor to sheath measurements were used to estimate a thermocouple length. Thus, 41 out of the 52 installed thermocouples provide an indication of length. The tabulated data in Appendix B shows the estimated reduction in the thermocouple's calculated length and also the estimated height of the thermocouple above the reactor base. As a point of reference, the in-core thermocouple length at grid location H-8 was estimated to be 21 ft long before the accident. E-11 appeared to have experienced the greatest reduction in length, with its apparent junction located at the base of the reactor.

The SPND test measurements are tabulated in Appendix C for the shorted, opened, and as-left conditions. The measured values are shown in basic units; i.e., hertz (Hz), henry (H), farad (F), and ohms (Ω). Frequency 1 and frequency 3, as listed, are the first and third resonant frequency obtained for the various conditions. These frequencies can be used to determine the cable's length, as explained in Appendix C.

The SPND test data provided no further information on the condition of the in-core detectors. These data were considered as they related to the condition of the extension cables.

EXTENSION CABLES

Baseline data on the characteristics of the in-core extension cable were obtained from the only available sample that could be located, a 10-ft section. Table 1 shows the cable parameters obtained from measurements of this section of in-core extension cable.

Some of the insulation resistance data showed a minor decrease from the value specified in the original specification.[3] The cable associated with assembly L-6 level 7 had the lowest insulation resistance of 1000 MΩ, while the other pairs in the cable had an insulation resistance ranging between 7000 and 14,000 MΩ. The remainder of the cables had insulation resistances ranging from 10,000 to 75,000 MΩ.

The results of the various measurements were used to compute the cable lengths. The length of the cables, based on the loop resistance data and the baseline data obtained in the laboratory, indicated the cables were about 10 to 15% shorter than the pull sheets indicated. The lengths of the cables based on the TDR data agreed with those calculated using the loop resistance to within 2%. This would tend to indicate that the velocity of propagation for the cable did not change as a result of the accident environment. Since the velocity of propagation is a function of the dielectric constant (K), it was assumed that K had not changed. This would also indicate that very little, if any, moisture entered the cables. The resonant frequency data indicated that the cable lengths were within ± 6% of the pull sheet lengths. Laboratory cable samples were not available to obtain baseline data for comparison with these results. Laboratory data obtained on a two conductor twisted pair shielded cable indicated that cable length could be determined to within 1% of actual length using the resonant frequency technique.

The cable capacitances (C) and inductances (L) were measured at 1 kHz for a 10-ft control sample as well as the in-core instrument cables. An approximation of the characteristic impedance computed for both sets of data and compared, since data on exact cable length were not available.

TABLE 1. CABLE PARAMETERS

Materials	Parameters	Measurements
Thermocouple (Type K, 1 pair)		
	Resistance	
	Loop	0.5263 Ω/ft
	Ch-return[a]	0.3845 Ω/ft
	Al-return[a]	0.1614 Ω/ft
	Capacitance	0.0245 nF/ft
	Inductance	0.3 μH/ft
SPND cable pairs (9 each)		
	Loop resistance	0.0207 Ω/ft
	Capacitance	0.0247 nF/ft
	Inductance	0.19 μH/ft
Insulation (Teflon-FEP)	Dielectric constant	2.1[4]

a. Return was a SPND cable sheath conductor.

Table 2 shows the maximum, minimum, and average values of the computed characteristic impedances for the 8 pairs of cables. The characteristic impedance, Zo, is equal to:

$$Zo = (L/C)^{1/2}$$

The only cables having values to fall below the minimum of the control cable were H-9 (4 pairs), G-5 (3 pairs), and L-11 (2 pairs). A check of the insulation resistance for these cables shows no reason to suspect a difference. In fact cable L-6 had the lowest insulation resistance and yet the maximum, minimum, and average values for this cable all exceed those of the control sample. This deviation from the control sample may have resulted from the limited size of the control sample.

The characteristics of the cables tested, in general, appear to be in good condition. The insulation resistance was slightly low, but there was no indication that any of the cables had absorbed excessive amounts of moisture. It should be pointed out the Teflon does not exhibit good radiation resistance, and some changes would likely be expected considering the radiation environment.

TABLE 2. CHARACTERISTIC IMPEDANCES

Cable	Characteristic Impedances (Zo) Maximum (Ohms)	Minimum (Ohms)	Average (Ohms)
Control	93.27	86.40	90.74
H-9	88.38	84.25	86.49
G-5	90.15	84.03	86.94
L-6	94.94	88.73	90.90
N-8	93.53	89.91	91.77
L-11	90.77	84.55	87.57
E-11	94.96	89.41	92.85
O-12	92.70	88.39	90.95

IN-CORE DAMAGE

The in situ testing performed was not intended to change any of the early findings concerning the general condition of the in-core instruments' conditions as summarized in Figure 2. The testing was intended to focus on the extension cable in an effort to reduce the uncertainty of the earlier analysis. This was accomplished by testing a limited number of the in-core extension cables. The results of these tests were discussed earlier in this report and are summarized in Appendix B. Figure 5 shows a cross-section of the in-core instrument assembly, instrument tube, and instrument tube sleeve. The known information on the in-core instruments is shown in Appendix D. Figure D-1 in Appendix D shows a cross-section of the active core area and the lower portion of the reactor vessel with some reference dimensional data. Typical in-core instruments are shown in their pre-accident condition. The remaining Figures D-2 through D-15 show cross-sections of the reactor vessel at grid locations 1 through 14. These figures show the estimated locations of the thermocouple junctions, as well the known SPND condition based on the 1982 test data.

Applying the correction factor discussed earlier in this report to the 1982 estimated thermocouple junction location, all junctions appear to be located within the reactor vessel. The junction locations varied from E-11, which appeared to be at the reactor base, to D-14 where the junction appeared to be 4.49 ft below its original location. Figure 4 is a grid map of the core showing the estimated reductions in the lengths of the original thermocouples at various locations. The map also outlines two areas of major damage where all thermocouple junctions were located in the lower region of the reactor vessel. As noted earlier, these lengths have an uncertainty of ± 1.25 ft. This uncertainty could have been improved with additional in situ testing; however, when considering that this ± 1.25 ft uncertainty translates to only a 6% possible error (1.25 ft/21 ft x 100%), for the in-reactor-vessel length, the additional measurements did not seem warranted.

The SPNDs located in the shaded two areas also showed major damage. An earlier report, NSAC-80-1, stated "At about 226 min into the accident (07:47), something traumatic happened in the core. SPNDs

throughout the core went off-scale, possibly indicating a rapid temperature increase."[5] A review of the SPNDs which alarmed at 7:47 a.m. the morning of the accident indicated that 47 of the 51 alarming SPNDs were located in these two general areas. Figure 5 shows a cross section of an in-core instrument assembly.

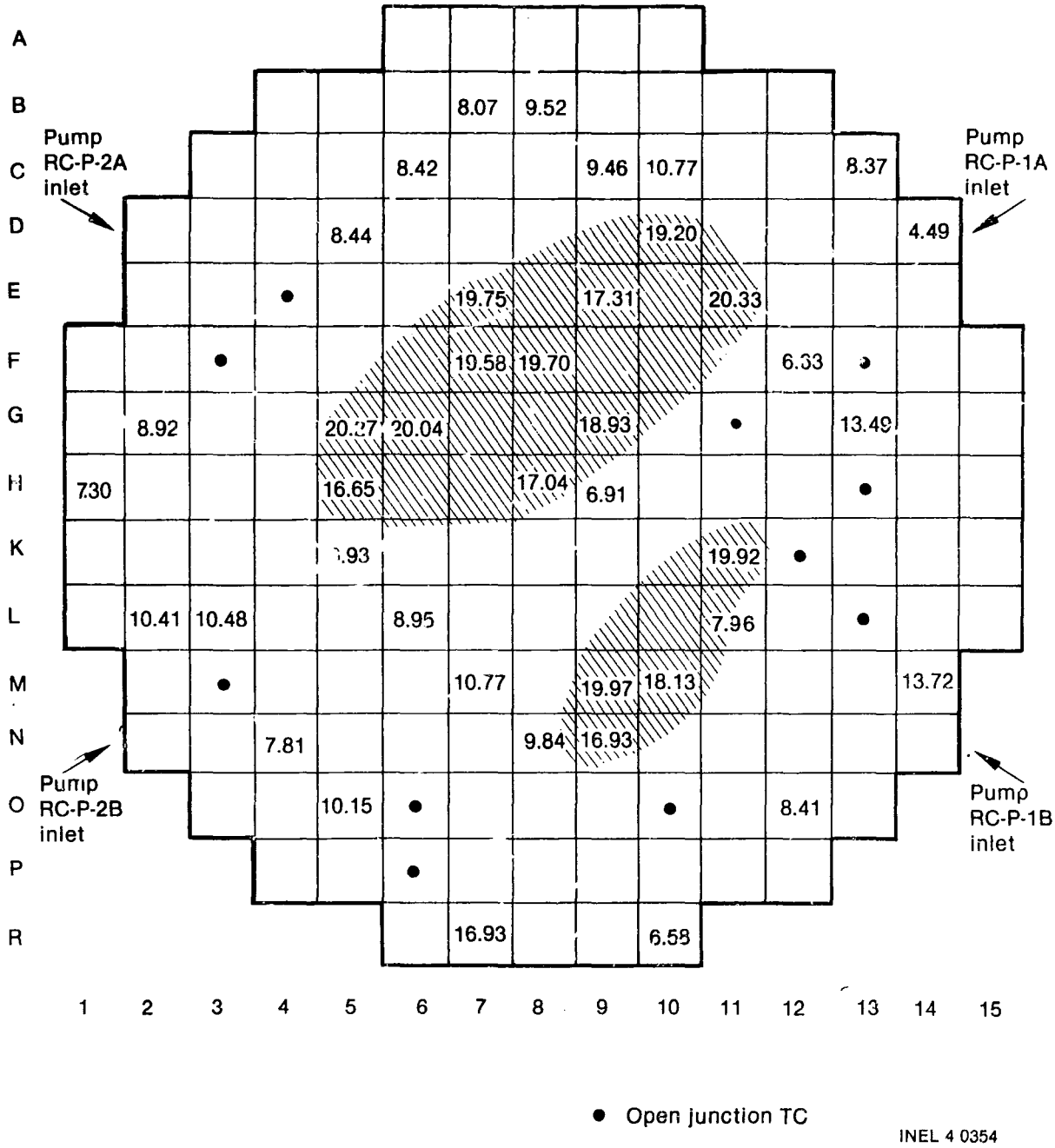

Figure 4. TMI-2 core map showing estimated core reduction in thermocouple lengths (ft) and area of maximum damage.

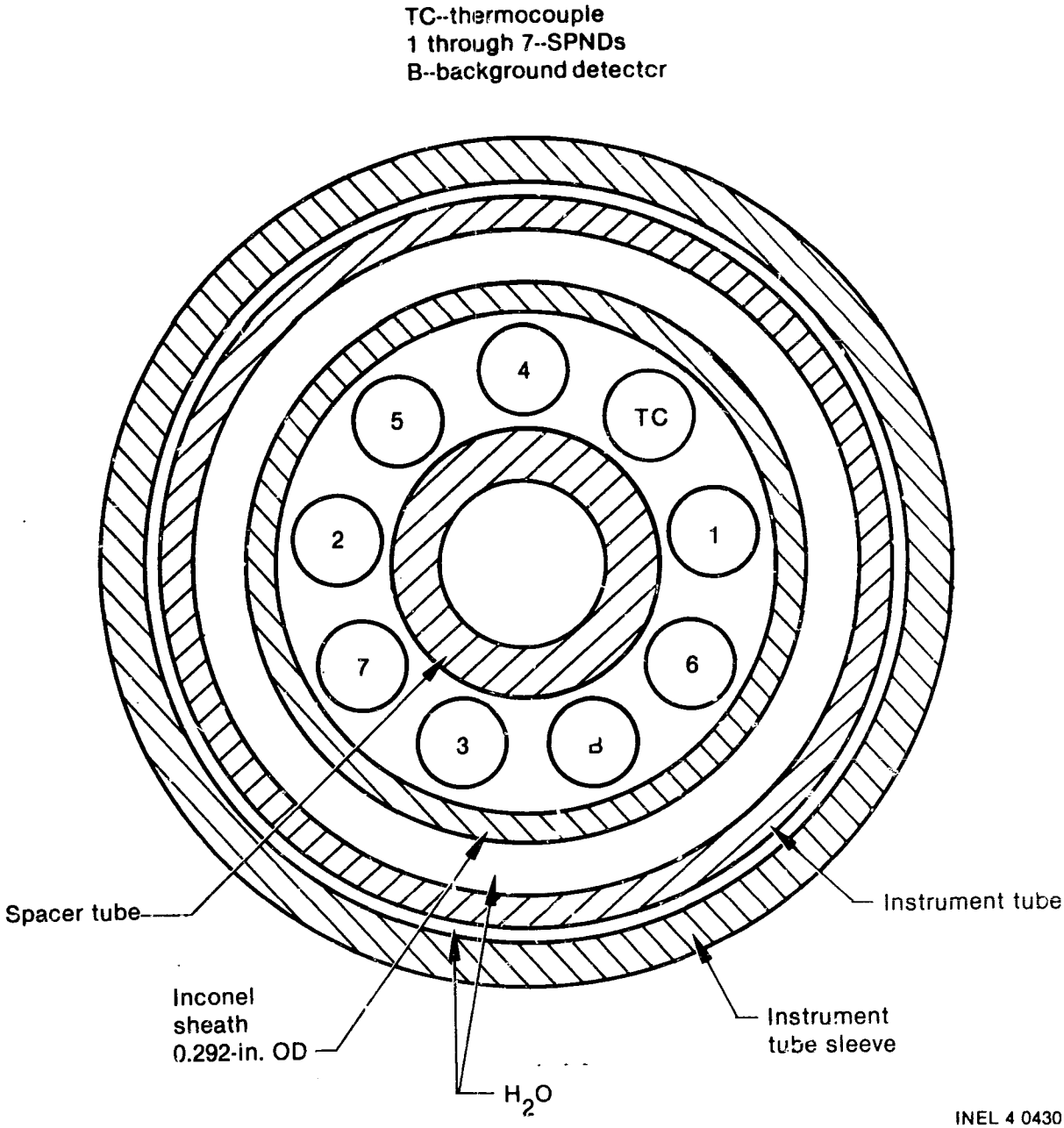

Figure 5. Cross section of an in-core instrument assembly (as viewed toward the thermocouple junction), instrument tube, and instrument tube sleeve.

GENERAL EXPECTATION OF CORE DAMAGE

The authors reviewed the existing data on the in-core instruments and have attempted to relate present conditions to probable damage mechanism and thus to infer core condition. In this manner, hypotheses have been formulated which will have to be further tested in order to arrive at a firm conclusion. The hypotheses are presented here as the best engineering estimate, at this time, of the condition of the core below the rubble.

The damage experienced by the in-core instruments ranged from none, for the SPNDs which were still considered operational, to severe for the SPNDs and thermocouples which failed by shorting. Those SPNDs indicating a reduced insulation resistance, but not shorted, could have experienced a more moderate form of damage consisting of only sheath failure. Sheath failure could have resulted from temperatures in the range of 2470 to 2575°F or at a lower temperature of 1700°F during a rapid quench.[6] The shorting which occurred in the TCs and SPNDs could also indicate that temperatures may have reached the melting point of materials ranging from Inconel (2470 to 2575°F) to zircaloy (3350°F) and/or that there was a shift in some of the mechanical structure resulting in a pinch point and hence a shorting condition. Further, by understanding the behavior of the in-core instruments and comparing this to the data recorded during the accident, one can find additional pieces to help in understanding what happened in the core.

The authors have developed the hypothesis that the core reached temperatures in excess of 927°C (1700°F) at all levels of the core in the shaded areas of Figure 4 as well as for areas outside the shaded region for elevations above 2.4 ft (nominal) above the base of the active core area. This is essentially the minimum temperature at which sheath failure could occur and encompasses the volume of the core containing no surviving SPNDs.

The authors also developed the hypothesis that in the lower region of the reactor vessel, a shorted thermocouple is more likely to be caused by mechanical damage rather than by direct thermal damage to the in-core instruments. This suggests the possibilty of damage to the lower grid

assembly and flow distributor assembly in those areas where the new thermocouple junctions appear to be below the active core. This hypothesis is supported by the following observations.

First, a relationship appears to exist between the SPNDs that alarmed at 7:45 a.m. on the day of the accident and the shaded area in Figure 4 which contains the TCs with reformed junctions below the active core. At this time 52 SPNDs alarmed with 49 of them being in the shaded area of Figure 4. Further, over the period between 7:45 and 7:50 a.m., 95 SPNDs alarmed with 63 of them being in the shaded area of Figure 4. During the period from 7:30 to 7:45 a.m., there were only 17 alarms with 5 of these in the shaded area of Figure 4. This suggests a quiet period leading up to a relatively short period of intense activity, probably caused by movement of damaged core materials.

Second, a relationship appears to exist between shorted SPNDs and reformed TC junctions, in the shaded area of Figure 4, suggesting that the same mechanisms caused both shorted SPNDs and shorted (new junction) TCs. From the updated TC lengths in Appendix B, there are a total of 16 TCs with new junctions below the active core. Fifteen of these are in the shaded area of Figure 4. Of the instrument assemblies containing these TCs, 44% also contain shorted SPNDs. Of the remaining in-core instrument assemblies which are either known to have TC junctions in the active core or which have no TC junction, only 25% also contain shorted SPNDs. Laboratory tests to date have failed to find a direct thermal mechanism to short TCs and SPNDs in the presence of steam. The only viable theory advanced date is that of mechanical deformation causing contact between the various materials. Again, this suggests mechanical movement concentrated in the shaded are of Figure 4. The authors also feel that there is sufficient data to support a hypothesis for a steep axial temperature gradient going from undamaged core to severely damaged core. This is based on examination of the distance between the new TC junctions and surviving SPNDs. There are 6 instrument assemblies containing surviving SPNDs and also having new TC junctions. In these cases, the TC junctions are within 20 inches above a good SPND. Twenty inches is also the uncertainty for location of damage between two adjacent SPND locations.

Work is currently in progress to do a comprehensive analysis of the in-core instrument data and relate this analysis to the accident sequence of events. This work includes decoding the SPND data that will provide a continuous history of 36 SPND data channels recorded on strip charts and also experimentally determining the significance of those signals recorded on the strip charts. As a result of this analysis effort and physical examinations yet to be performed, the hypotheses presented by the authors above will be tested and results will be reported.

REFERENCES

1. M. E. Yancey and N. Wilde, Preliminary Report of TMI-2 In-core Instrument Damage, GEND-INF-031, January 1983.

2. Videotape, Quick-Look II, July 1983.

3. Burns and Roe, Inc., "Instrumentation Cables," Specification 2555-106, p. TS-12.

4. Brand-Rex Wire and Cable Engineering Guide, Publication WC-82.

5. Nuclear Safety Analysis Center, Analysis of Three Mile Island Unit 2 Accident, NSAC-80-1, March 1980.

6. H. D. Warren, Interpretation of TMI-2 Instrument Data, Appendix B, NSAC/28, May 1982.

APPENDIX A

A SUMMARY OF THERMOCOUPLE TEST DATA

APPENDIX A

A SUMMARY OF THERMOCOUPLE TEST DATA

After the installation of the incore monitor assemblies, resistance measurements were made on each assembly to verify that proper continuity and grounding existed on each of the thermocouples. Resistance measurements were made between the chromel and alumel conductors and each of the conductors and the shield providing three sets of resistance data. These measurements were combined with the estimated resistance values for the extension cables, providing a set of total loop resistance values for each in-core thermocouple. The resistance data can be expressed in the following general form

$$R_t = R_i + R_c$$

where

R_i = Postinstallation resistance data

R_c = Estimated or measured extension cable resistance data

R_t = Total loop resistance.

In the following tables, the as-found loop resistance (Item 1) corresponding to R_t and the measured loop resistance of the extension cable (Item 3) corresponding to R_c are shown for the seven assemblies tested during 1983. Item 4 was the estimated loop resistance computed in 1982, which also corresponded to R_c. Item 6 is the postinstallation resistance data corresponding to R_i. Because the in-core thermocouples had a known length of approximately 130 ft, it was possible to determine the resistance per foot values for each of the thermocouples. By knowing this resistance per foot value and comparing the postinstallation resistance data with a postaccident resistance of the in-core thermocouple, it was possible to estimate a reduction in the 130-ft length of the thermocouple. This calculation expressed in terms of the data in the tables is shown in the following equation

Reduced TC length = [Item 6 - (Item 1 - Item 3)]/(Item 6/130 ft).

Data on the reduced TC lengths have been tabulated in Appendix B.

Item 7 estimates the error in the 1982 calculations when compared with the 1983 in situ test measurements and Item 8 is an estimated length of the extension cable based on the measured loop resistance (Item 3) and the known resistance per foot (Item 9).

TABLE A-1. ASSEMBLY 2 (H-9)

	CH-AL	CH-GND	AL-GND
1. As-found loop resistance for TC and extension cables 1983 (Ω)	1034	740.3	302.2
2. Insulation resistance of extension cable 1983 (Ω)	2 E+10	1.8 E+10	1.8 E+10
3. Loop resistance of extension cable 1983 (Ω)	216	159.7	64.7
4. Estimated loop resistance of extension cable 1982 (Ω)	237	169.33	71.66
5. Difference between 3 and 4 above	-21	-9.63	-6.96
6. Postinstallation resistance of in-core TC (Ω)	891	637.35	249.36
7. Estimated error in 1982 TC length calculations (ft)	-3.06	-1.96	-3.63
8. Estimated extension cable length based on 1983 data (ft)	410.41	415.34	400.86
9. Reference data for extension cables (Ω/ft)	0.5213	0.3845	0.1614

TABLE A-2. ASSEMBLY 9 (G-5)

	CH-AL	CH-GND	AL-GND
1. As-found loop resistance for TC and extension cables 1983 (Ω)	Open	Open	Open
2. Insulation resistance of extension cable 1983 (Ω)	3.6 E+10	3.0 E+10	5.8 E+10
3. Loop resistance of extension cable 1983 (Ω)	221.83	164.04	66.33
4. Estimated loop resistance of extension cable 1982 (Ω)	265.17	189.46	80.18
5. Difference between 3 and 4 above	-43.34	-25.42	-13.86
6. Postinstallation resistance of in-core TC (Ω)	960.87	685.49	273.41
7. Estimated error in 1982 TC length calculations (ft)	-5.86	-4.82	-6.59
8. Estimated extension cable length based on 1983 data (ft)	421.49	426.63	410.94
9. Reference data for extension cables (Ω/ft)	0.5263	0.580	0.1614

TABLE A-3. ASSEMBLY 12 (L-6)

	CH-AL	CH-GND	AL-GND
1. As-found loop resistance for TC and extension cables 1983 (Ω)	690	496	205.5
2. Insulation resistance of extension cable 1983 (Ω)	7.4 E+9	6.9 E+9	7 E+9
3. Loop resistance of extension cable 1983 (Ω)	211.47	153.96	66.11
4. Estimated loop resistance of extension cable 1982 (Ω)	243.5	173.98	73.63
5. Difference between 3 and 4 above	-32.03	-20.02	-7.516
6. Postinstallation resistance of in-core TC (Ω)	929.1	663.98	265.45
7. Estimated error in 1982 TC length calculations (ft)	-4.48	-3.92	-3.68
8. Estimated extension cable length based on 1983 data (ft)	401.81	400.42	409.63
9. Reference data for extension cables (Ω/ft)	0.5213	0.3845	0.1614

TABLE A-4. ASSEMBLY 14 (N-8)

	CH-AL	CH-GND	AL-GND
1. As-found loop resistance for TC and extension cables 1983 (Ω)	O.R.	618	O.R.
2. Insulation resistance of extension cable 1983 (Ω)	6 E+9	4.6 E+10	6.2 E+10
3. Loop resistance of extension cable 1983 (Ω)	208.95	152.85	64.59
4. Estimated loop resistance of extension cable 1982 (Ω)	243.5	173.98	73.63
5. Difference between 3 and 4 above	-34.55	-21.13	-9.04
6. Postinstallation resistance of in-core TC (Ω)	936.78	670.44	266.83
7. Estimated error in 1982 TC length calculations (ft)	-4.79	-4.10	-4.41
8. Estimated extension cable length based on 1983 data (ft)	397.02	397.53	400.16
9. Reference data for extension cables (Ω/ft)	0.5263	0.580	0.1614

TABLE A-5. ASSEMBLY 18 (L-11)

	CH-AL	CH-GND	AL-GND
1. As-found loop resistance for TC and extension cables 1983 (Ω)	1507	655	289
2. Insulation resistance of extension cable 1983 (Ω)	8 E+9	1.25 E+10	4.1 E+10
3. Loop resistance of extension cable 1983 (Ω)	213.85	158	64.12
4. Estimated loop resistance of extension cable 1982 (Ω)	243.5	173.98	73.63
5. Difference between 3 and 4 above	-29.65	-15.98	-9.51
6. Postinstallation resistance of in-core TC (Ω)	950.38	678.87	272.64
7. Estimated error in 1982 TC length calculations (ft)	-4.06	-3.06	-4.53
8. Estimated extension cable length based on 1983 data (ft)	406.33	410.92	397.29
9. Reference data for extension cables (Ω/ft)	0.5213	0.3845	0.1614

TABLE A-6. ASSEMBLY 26 (E-11)

	CH-AL	CH-GND	AL-GND
1. As-found loop resistance for TC and extension cables 1983 (Ω)	936	667	284
2. Insulation resistance of extension cable 1983 (Ω)	4 E+10	3.2 E+10	3.4 E+10
3. Loop resistance of extension cable 1983 (Ω)	206.51	151.24	63.67
4. Estimated loop resistance of extension cable 1982 (Ω)	248.9	177.85	75.27
5. Difference between 3 and 4 above	-42.39	-26.61	-11.61
6. Postinstallation resistance of in-core TC (Ω)	964.46	687.74	274.44
7. Estimated error in 1982 TC length calculations (ft)	-5.71	-5.03	-5.50
8. Estimated extension cable length based on 1983 data (ft)	392.38	393.34	394.45
9. Reference data for extension cables (Ω/ft)	0.5263	0.580	0.1614

TABLE A-7. ASSEMBLY 48 (0-12)

	CH-AL	CH-GND	AL-GND
1. As-found loop resistance for TC and extension cables 1983 (Ω)	876.5	622.5	267.3
2. Insulation resistance of extension cable 1983 (Ω)	3 E+10	2 E+10	2.9 E+10
3. Loop resistance of extension cable 1983 (Ω)	209.82	153.07	65.24
4. Estimated loop resistance of extension cable 1982 (Ω)	243.5	173.98	73.76
5. Difference between 3 and 4 above	-33.68	-20.91	-8.52
6. Postinstallation resistance of in-core TC (Ω)	911.35	651.98	260.05
7. Estimated error in 1982 TC length calculations (ft)	-4.80	-4.17	-4.26
8. Estimated extension cable length based on 1983 data (ft)	398.67	398.10	404.21
9. Reference data for extension cables (Ω/ft)	0.5213	0.3845	0.1614

APPENDIX B

UPDATED IN-CORE THERMOCOUPLE LENGTHS

APPENDIX B

UPDATED IN-CORE THERMOCOUPLE LENGTHS

These tables show the assembly numbers and the grid locations of each of the thermocouples. Also shown is the original length of that portion of each thermocouple that was located in the reactor and the calculated reduction in length of each TC based on the 1983 in situ test data. The difference between the original length and the calculated reduction is shown as the length from the reactor base.

TABLE B-1. UPDATED IN-CORE THERMOCOUPLE LENGTHS--1983

Assembly Number	Grid Location	Original Length in Reactor (ft)	Calculated Reduction in Length (ft)	Length From Reactor Base (ft)
1	H8	21.00	17.04	3.96
2	H9	20.97	6.91	14.06
3	G9	20.93	18.93	1.99
4	F8	20.86	19.70	1.16
5	E9	20.64	17.31	3.33
6	F7	20.82	19.58	1.24
7	E7	20.64	19.75	0.88
8	G6	20.82	20.04	0.78
9	G5	20.64	20.27	0.37
10	H5	20.68	16.65	4.02
11	K5	20.64	6.93	13.71
12	L6	20.71	8.95	11.76
13	M7	20.64	10.77	9.87
14	N8	20.41	9.84	10.57
15	N9	20.37	16.93	3.44
16	M9	20.64	19.97	0.66
17	M10	20.53	18.13	2.40
18	L11	20.53	7.96	12.56
19	K11	20.64	19.92	0.72
20	K12	20.37	--	--
21	H13	20.06	--	--
22	G13	20.02	13.49	6.53
23	F13	19.89	--	--
24	F12	20.26	6.63	13.63
25	G11	20.64	--	--
26	E11	20.33	20.33	0.00
27	D10	20.26	19.20	1.06
28	C10	19.89	10.77	9.12
29	C9	20.02	9.46	10.56
30	B8	19.59	9.52	10.08
31	B7	19.55	8.07	11.48
32	C6	19.89	8.42	11.48
33	D5	20.06	8.44	11.62
34	E4	20.06	--	--
35	F3	19.89	--	--
36	G2	19.55	8.92	10.63
37	H1	19.00	7.30	11.70
38	L2	19.42	10.41	9.01
39	L3	19.89	10.48	9.42
40	M3	19.68	--	--
41	N4	19.77	7.81	11.96
42	O5	19.68	10.15	9.53
43	O6	19.89	--	--
44	P6	19.42	--	--

TABLE B-1. (continued)

Assembly Number	Grid Location	Original Length in Reactor (ft)	Calculated Reduction in Length (ft)	Length From Reactor Base (ft)
45	R7	18.95	16.93	2.01
46	R10	18.80	6.58	12.22
47	O10	19.89	--	--
48	O12	19.37	8.41	10.96
49	M14	19.19	13.72	5.47
50	L13	19.89	--	--
51	D14	18.85	4.49	14.35
52	C13	18.95	8.37	10.58

APPENDIX C

SPND IN SITU TEST DATA 1983

APPENDIX C

SPND IN SITU TEST DATA 1983

Measurements taken on the extension cables are tabulated in the following tables. Measurements were performed on each of the seven cables in the as-found condition, the shorted condition, the opened condition, and the as-left condition. The as-found and the as-left conditions yielded the same results, therefore the as-found data were not included in this table. The measurements included resistance, insulation resistance, capacitance, inductance, and resonant-frequency data.

The resonant-frequency data can be used to determine the lengths of the extension cables, provided baseline data is available of the cables' velocity of propagation. According to transmission line theory,[a] when a transmission line is excited with a signal the voltage existing on the transmission line can be expressed as the sum of two waves. One of these waves can be regarded as traveling from the generator to the load end of the line and is called the incident wave, while the second wave is considered to be traveling toward the generator and is termed the reflected wave. The distance that a wave must travel along a line in order for a total phase shift of 2 radians or 360 degrees to occur is called a wavelength. A wavelength is also defined as the velocity of propagation of the wave divided by its frequency. The magnitude and phase of each of these waves vary along the length of a line. As the distance from the load increases to a quarter-wavelength for an open-circuit load, the phase of the incident wave advances 90 degrees from its phase position at the load, while the reflected wave has dropped back by a similar amount. This results in a 180-degree phase shift between the incident and reflected waves. A similar phase shift between the incident wave and the reflected wave results at a distance of a half-wavelength from the load for a short-circuit load condition. These 180-degree phase shifts between the incident waves and the reflected waves are repeated each time the distance along the line from the load is increased by an additional half-wavelength.

---

a. From Frederick E. Terman, Electronic and Radio Engineering, 4th Ed., Chapter 4, New York: McGraw-Hill Book Company, 1955.

By knowing the velocity of propagation (V_p) for a given type of cable and by selecting the frequency of the exciting signal such that a phase shift of 180 degrees exists between the incident and reflected waves, the length of the cable can be determined in terms of wavelengths. At the first frequency (F1) for which a phase shift of 180 degrees occurs between the reflected and incident waves, the cable's length would appear to be a quarter-wavelength long for the short-circuit condition. By increasing the frequency to a second (F2) and a third (F3) frequency where a phase shift of 180 degrees occurs between the incident and reflected waves, the cable's length would appear to be three-quarters-wavelength long at F2 and five-quarters-wavelength long at F3 for the open-circuit condition. The cable's length for the short-circuit condition would appear to be a wavelength long at F2 and 1-1/2-wavelengths long at F3. Thus the length (l) of a cable can be defined in terms of the resonant frequency

for the open-circuit condition

$$l = V_p/(4\ F1),\ V_p/(4/3 \times F2),\ V_p/(4/5 \times F3) \qquad (1)$$

for the short-circuit condition

$$l = V_p/(2\ F1),\ V_p/F2,\ V_p/(2/3 \times F3). \qquad (2)$$

Using the Hewlett-Packard LF Impedance Analyzer (4192A) and a directional bridge (H-P 8721A), the resonant frequencies F1, F2, and F3 were measured for various cables in the laboratory as well as during in situ testing. These frequency data provide a useful method for determining cable length using the relationships shown in Equations 1 and 2. Laboratory testing indicated that the best agreement between the calculated cable length and measured cable length was obtained using the higher resonant frequency data. Because a data base did not exist for the velocity of propagation of the cable installed in TMI-2, the frequency data was not evaluated in detail. During a brief examination of the data, some inconsistencies were noted and may have resulted from the manual data

logging procedure used during the in situ testing. This procedure has since been changed and is incorporated as part of a computerized data acquisition system that will eliminate problems resulting from manual logging of data. The data were included here for possible comparison against similar data.

TABLE C-1. ASSEMBLY H-9

Condition Shorted				
Level	Frequency 1	Frequency 3	L	R
1	5590	1471780	0.0000796	8.2
2	--	--	0.0000783	8.2
3	--	--	0.0000789	8.4
4	--	--	0.0000794	8.3
5	--	--	0.0000783	8.3
6	--	--	0.0000789	8.2
7	--	--	0.0000798	8.4
8	--	--	0.0000788	8.2

Condition Open				
Level	Frequency 1	Frequency 3	Capacitance	IR
1	371270	1875620	1.04 E-8	1.7 E+10
2	378620	1905800	1.007 E-8	2.1 E+10
3	373750	1885800	1.01 E-8	1.8 E+10
4	370470	1856950	1.08 E-8	1.5 E+10
5	359950	1874900	1.05 E-8	1.6 E+10
6	367100	1847200	1.078 E-8	2 E+10
7	367400	1855500	1.076 E-8	2.1 E+10
8	367440	1863400	1.11 E-8	1.8 E+10

TABLE C-1. (continued)

Condition As-Left				
Level	Frequency 1	Frequency 3	Capacitance	R or IR
1	159170	1564500	3.027 E-8	4.5 E+8
2	173290	1588450	2.08 E-8	347.6
3	171490	1583350	2.08 E-8	307.26
4	162350	1496700	2.29 E-8	338.5
5	164765	1556730	2.24 E-8	332.8
6	166290	1573300	2.21 E-8	350.16
7	162685	1498990	2.25 E-8	309.85
8	157260	1507380	2.47 E-8	348.03

TABLE C-2. ASSEMBLY G-5

Condition Shorted				
Level	Frequency 1	Frequency 3	L	R
1	5513	1471980	0.0000829	8.372
2	--	--	0.0000822	8.437
3	--	--	0.0000817	8.54
4	--	--	0.0000823	8.379
5	--	--	0.000082	8.364
6	--	--	0.0000814	8.329
7	--	--	0.0000814	8.417
8	--	--	0.0000803	8.416

Condition Open				
Level	Frequency 1	Frequency 3	Capacitance	IR
1	364260	1811400	1.02 E-8	1.6 E+10
2	366900	1817550	1.008 E-8	2.8 E+10
3	358100	1779150	1.09 E-8	1.6 E+10
4	356200	1756250	1.011 E-8	1.1 E+10
5	359530	1787400	1.07 E-8	1.4 E+10
6	355930	1755590	1.011 E-8	8 E+9
7	359600	1766000	1.11 E-8	1 E+10
8	357830	1771500	1.137 E-8	1.2 E+10

TABLE C-2. (continued)

Condition As-Left				
Level	Frequency 1	Frequency 3	L	R
1	166080	1577900	2.11 E-8	328.46
2	169930	1574300	2.09 E-8	343.29
3	163100	1542850	2.27 E-8	327.29
4	157520	1491100	2.38 E-8	407.35
5	161170	1543650	2.27 E-8	311.2
6	162270	1543400	2.29 E-8	411.82
7	156980	1496400	2.38 E-8	317.19
8	157030	1515800	2.3 E-8	272.35

TABLE C-3. ASSEMBLY L-6

Condition Shorted

Level	Frequency 1	Frequency 3	L	R
1	5554	1521580	0.0000816	8.215
2	--	--	0.0000815	8.235
3	--	--	0.0000834	8.368
4	--	--	0.0000082	8.27
5	--	--	0.000081	8.501
6	--	--	0.0000806	8.343
7	--	--	0.0000822	8.179
8	--	--	0.0000811	8.449

Condition Open

Level	Frequency 1	Frequency 3	Capacitance	IR
1	365730	1782600	1.02 E-8	9 E+9
2	366830	1790450	9.96 E-9	1.4 E+10
3	363800	1818300	9.35 E-9	7.5 E+9
4	361650	1817400	9.75 E-9	8 E+9
5	364170	1802150	9.78 E-9	7.5 E+9
6	365230	1807950	9.6 E-9	8.1 E+9
7	359900	1770950	1.02 E-8	1 E+9
8	362950	1774500	1.03 E-8	7 E+9

TABLE C-3. (continued)

Condition As-Left				
Level	Frequency 1	Frequency 3	Capacitance	R or IR
1	158185	1627000	2.987 E-8	3.8×10^7
2	161780	1676960	2.1 E-8	360
3	163340	1665350	2.04 E-8	320
4	166020	1647740	2.03 E-8	330.1
5	166080	1658540	2.04 E-8	315.8
6	166445	1616190	2.01 E-8	300.04
7	162380	1612100	2.19 E-8	321.05
8	160210	1634090	2.16 E-8	324.59

TABLE C-4. ASSEMBLY N-8

Condition Shorted				
Level	Frequency 1	Frequency 3	L	R
1	5568	1542000	0.0000815	8.133
2	--	--	0.0000815	8.178
3	--	--	0.0000825	8.279
4	--	--	0.0000822	8.176
5	--	--	0.0000813	8.418
6	--	--	0.0000802	8.258
7	--	--	0.0000819	8.11
8	--	--	0.0000082	8.325

Condition Open				
Level	Frequency 1	Frequency 3	Capacitance	IR
1	372250	1805440	9.8 E-9	6.1 E+10
2	343800	1780040	9.9 E-9	1 E+11
3	371350	1827500	9.43 E-9	4.2 E+10
4	370930	1814550	9.56 E-9	4.5 E+10
5	368130	1800800	9.76 E-9	1.5 E+10
6	363740	1794700	9.92 E-9	3.8 E+10
7	373600	1804480	9.65 E-9	1 E+10
8	367330	1818980	9.54 E-9	3.2 E+10

TABLE C-4. (continued)

Condition As-Left				
Level	Frequency 1	Frequency 3	Capacitance	R or IR
1	166790	1652800	2.02 E-8	328.3
2	167150	1707780	1.91 E-8	6 E+9
3	176850	1722450	1.86 E-8	6 E+9
4	165380	1655350	2.03 E-8	348.9
5	171550	1693200	1.99 E-8	479.4
6	163390	1608470	2.07 E-8	340.96
7	None	None	1.61 E-8	98.91
8	163600	1670250	2.06 E-8	357

TABLE C-5. SSEMBLY L-11

Condition Shorted				
Level	Frequency 1	Frequency 3	L	R
1	5598	1559100	0.0000801	8.039
2	--	--	0.0000795	8.111
3	--	--	0.00008	8.181
4	--	--	0.0000793	8.152
5	--	--	0.000079	8.244
6	--	--	0.0000804	8.06
7	--	--	0.0000791	8.08
8	--	--	0.0000782	8.138

Condition Open				
Level	Frequency 1	Frequency 3	Capacitance	IR
1	373150	1817250	9.72 E-9	2 E+10
2	376110	1830650	9.71 E-9	5.4 E+10
3	371350	1809850	1.018 E-8	4 E+10
4	362760	1739950	1.109 E-8	2.6 E+10
5	372720	1785950	1.048 E-8	2.2 E+10
6	365980	1765250	1.035 E-8	2 E+10
7	372860	1780000	1.055 E-8	1.6 E+10
8	369000	1760700	1.094 E-8	2 E+10

TABLE C-5. (continued)

Condition As-Left				
Level	Frequency 1	Frequency 3	Capacitance	R or IR
1	171170	1658700	1.95 E-8	280
2	169600	1658900	2.01 E-8	356.63
3	165150	1626000	2.09 E-8	282.98
4	158130	1552400	2.3 E-8	293.54
5	160815	1597700	2.3 E-8	377.43
6	165710	1612000	2.17 E-8	333.2
7	162200	1594700	2.26 E-8	465.4
8	699900	2285600	2.257 E-8	23.9

TABLE C-6. ASSEMBLY E-11

Condition Shorted

Level	Frequency 1	Frequency 3	L	R
1	6080	1538000	0.000079	8.086
2	--	--	0.0000817	8.025
3	--	--	0.0000825	8.242
4	--	--	0.0000813	8.212
5	--	--	0.000082	8.19
6	--	--	0.0000793	8.038
7	--	--	0.0000806	8.098
8	--	--	0.0000822	8.209

Condition Open

Level	Frequency 1	Frequency 3	Capacitance	IR
1	383700	1942950	9.5 E-9	3.8 E+10
2	387950	1971200	9.15 E-9	6 E+10
3	379060	1944390	9.2 E-9	1.1 E+10
4	382540	1926260	9.35 E-9	1.3 E+10
5	380560	1910150	9.54 E-9	1 E+10
6	380170	1940580	9.92 E-9	1.2 E+10
7	383860	1935750	9.28 E-9	2.2 E+10
8	384050	1945600	9.33 E-9	1.2 E+10

TABLE C-6. (continued)

Condition As-Left				
Level	Frequency 1	Frequency 3	Capacitance	R or IR
1	170330	1720900	1.873 E-8	381.36
2	172010	1686750	1.89 E-8	312.1
3	171080	1622400	1.93 E-8	280
4	171940	1660500	2 E-8	327.6
5	167350	1614460	2.04 E-8	300.98
6	167940	1623500	2.14 E-8	352.74
7	171870	1647300	1.96 E-8	307.83
8	171040	1667000	1.7 E-8	181.19

TABLE C-7. ASSEMBLY 0-12

Condition Shorted				
Level	Frequency 1	Frequency 3	L	R
1	5570	1530700	0.0000807	8.27
2	--	--	0.0000799	8.216
3	--	--	0.0000813	8.469
4	--	--	0.0000797	8.375
5	--	--	0.000079	8.381
6	--	--	0.0000791	8.217
7	--	--	0.0000796	8.302
8	--	--	0.0000804	8.347

Condition Open				
Level	Frequency 1	Frequency 3	Capacitance	IR
1	371760	1824100	9.7 E-9	4.8 E+10
2	373100	1843750	9.43 E-9	8 E+10
3	367300	1828650	9.46 E-9	4.4 E+10
4	370940	1790700	1.02 E-9	4 E+10
5	367830	1825400	9.85 E-9	3 E+10
6	369830	1831220	9.63 E-9	5 E+10
7	373140	1824150	9.52 E-9	7.5 E+10
8	369930	1842540	9.57 E-9	2 E+10

TABLE C-7. (continued)

Condition As-Left				
Level	Frequency 1	Frequency 3	Capacitance	R or IR
1	5455	1537600	3.027 E-8	22.09
2	5205	1556200	2.08 E-8	17.01
3	164760	1644880	2.02 E-8	323.6
4	4960	1510950	2.29 E-8	15.74
5	5120	1545250	2.24 E-8	23.62
6	170800	1668500	2.01 E-8	350.24
7	4765	1550800	2.25 E-8	17.21
8	5078	1550400	2.47 E-8	21.69

APPENDIX D

REACTOR GRID PROFILES SHOWING CONDITION OF IN-CORE INSTRUMENTATION

APPENDIX D

REACTOR GRID PROFILES SHOWING CONDITION OF IN-CORE INSTRUMENTATION

Figure D-1 shows a cross-section of the reactor at grid location 8 with reference dimensions. The location and condition of the in-core instruments before the accident are also shown. The remaining figures show the postaccident condition of the SPNDs and the indicated probable locations of newly formed thermocouple junctions following the accident.

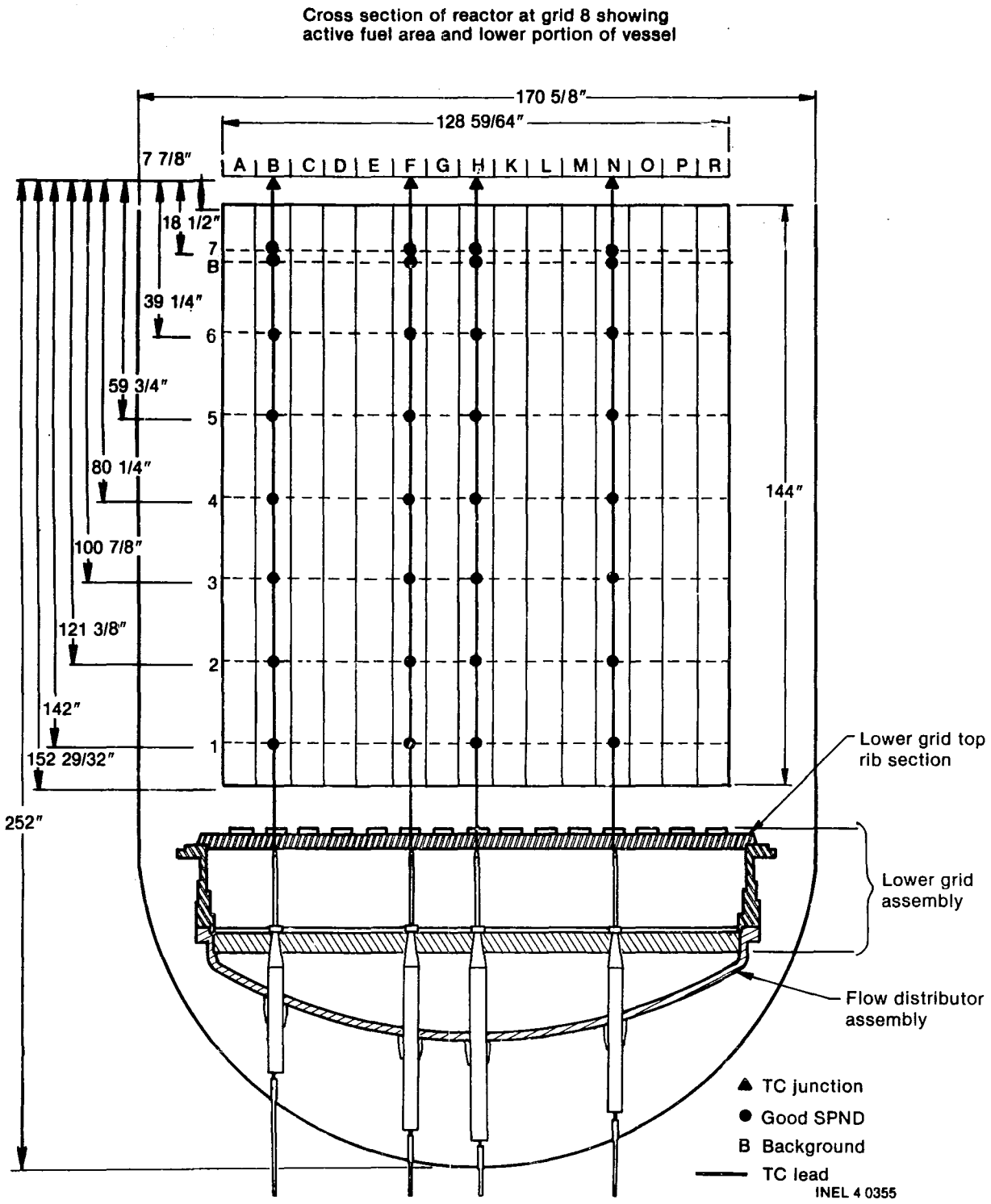

Figure D-1. Cross section of reactor at grid 8 showing active fuel area.

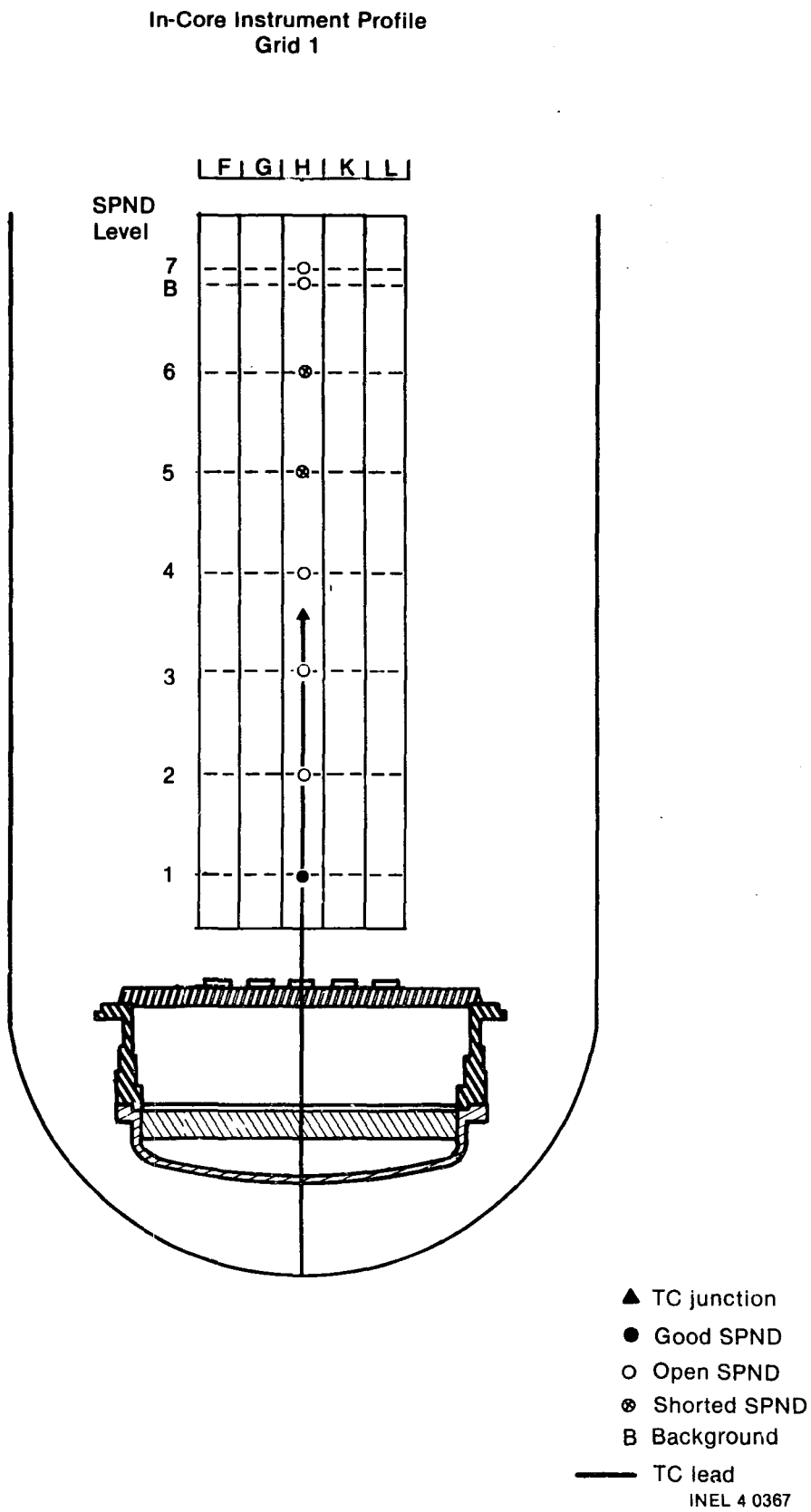

Figure D-2. In-core instrument profile grid 1.

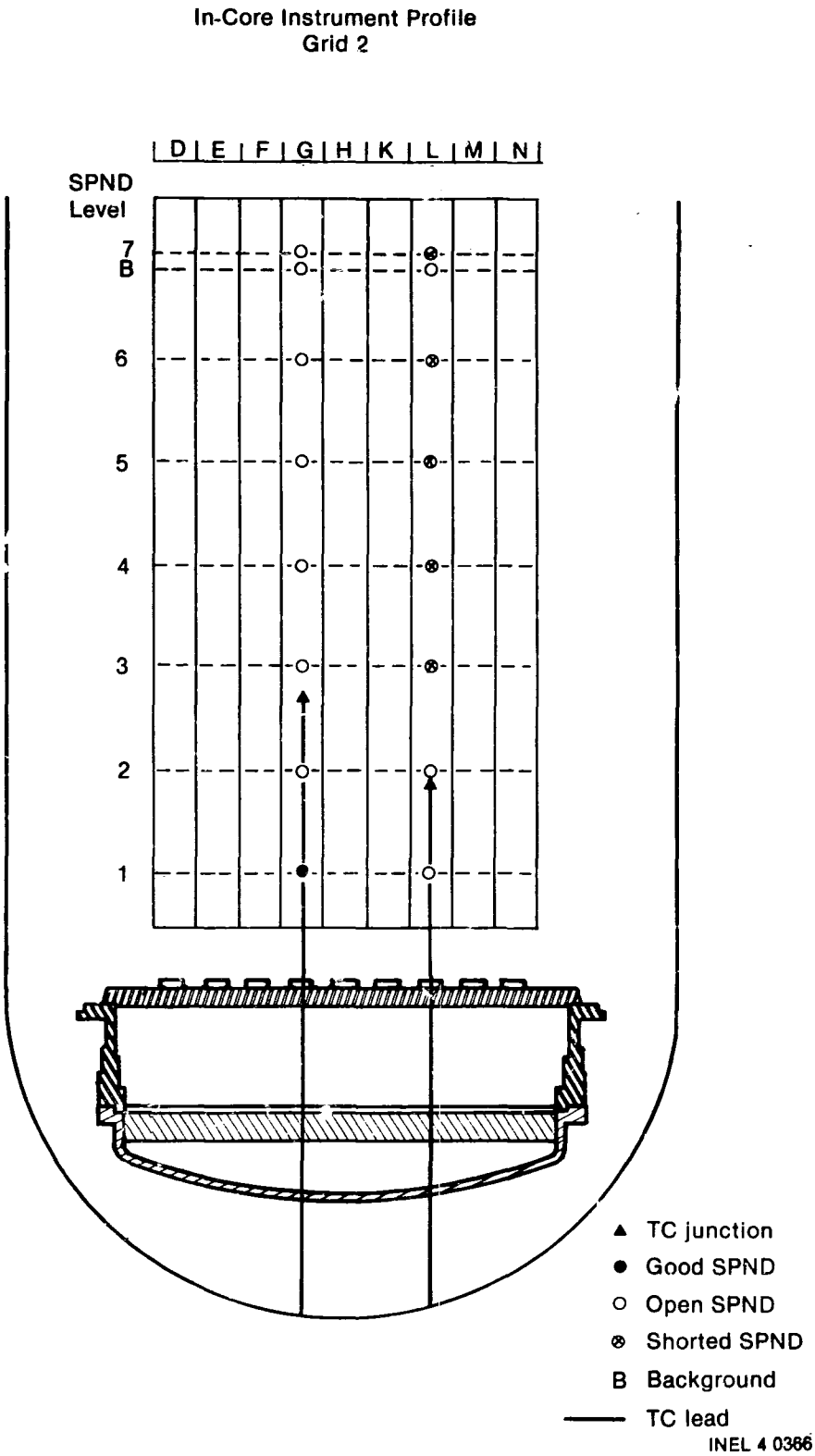

Figure D-3. In-core instrument profile grid 2.

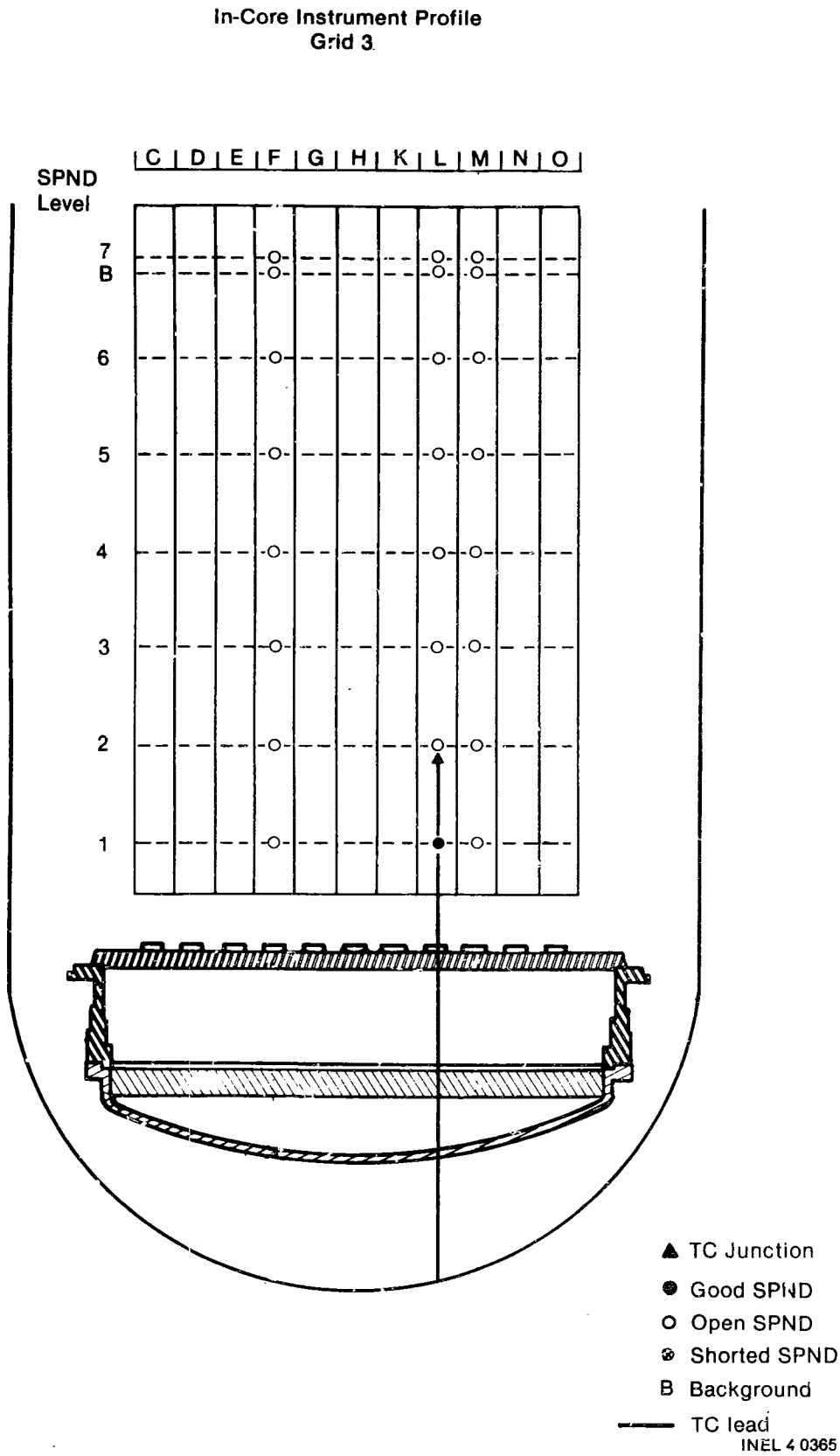

Figure D-4. In-core instrument profile grid 3.

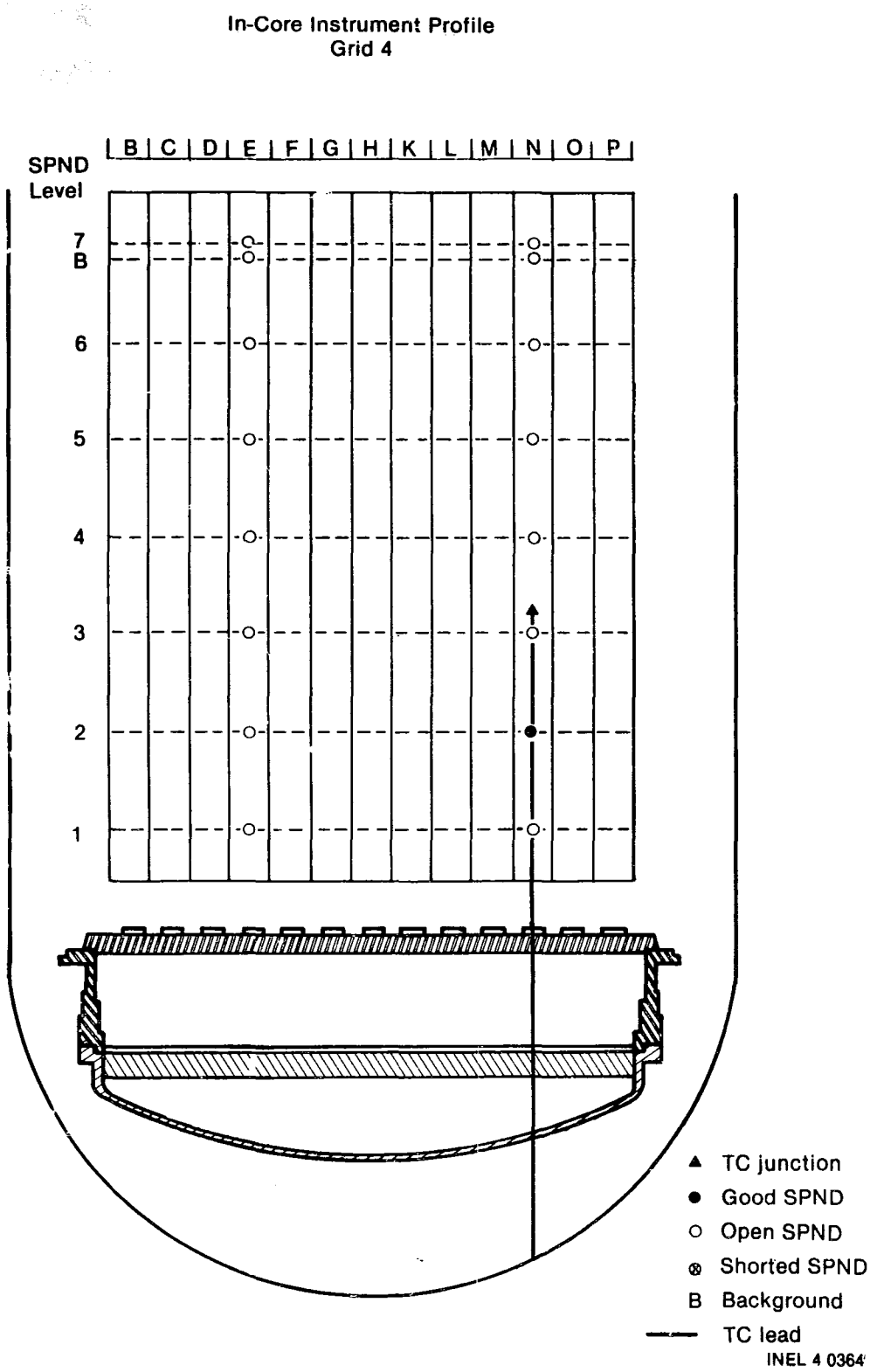

Figure D-5. In-core instrument profile grid 4.

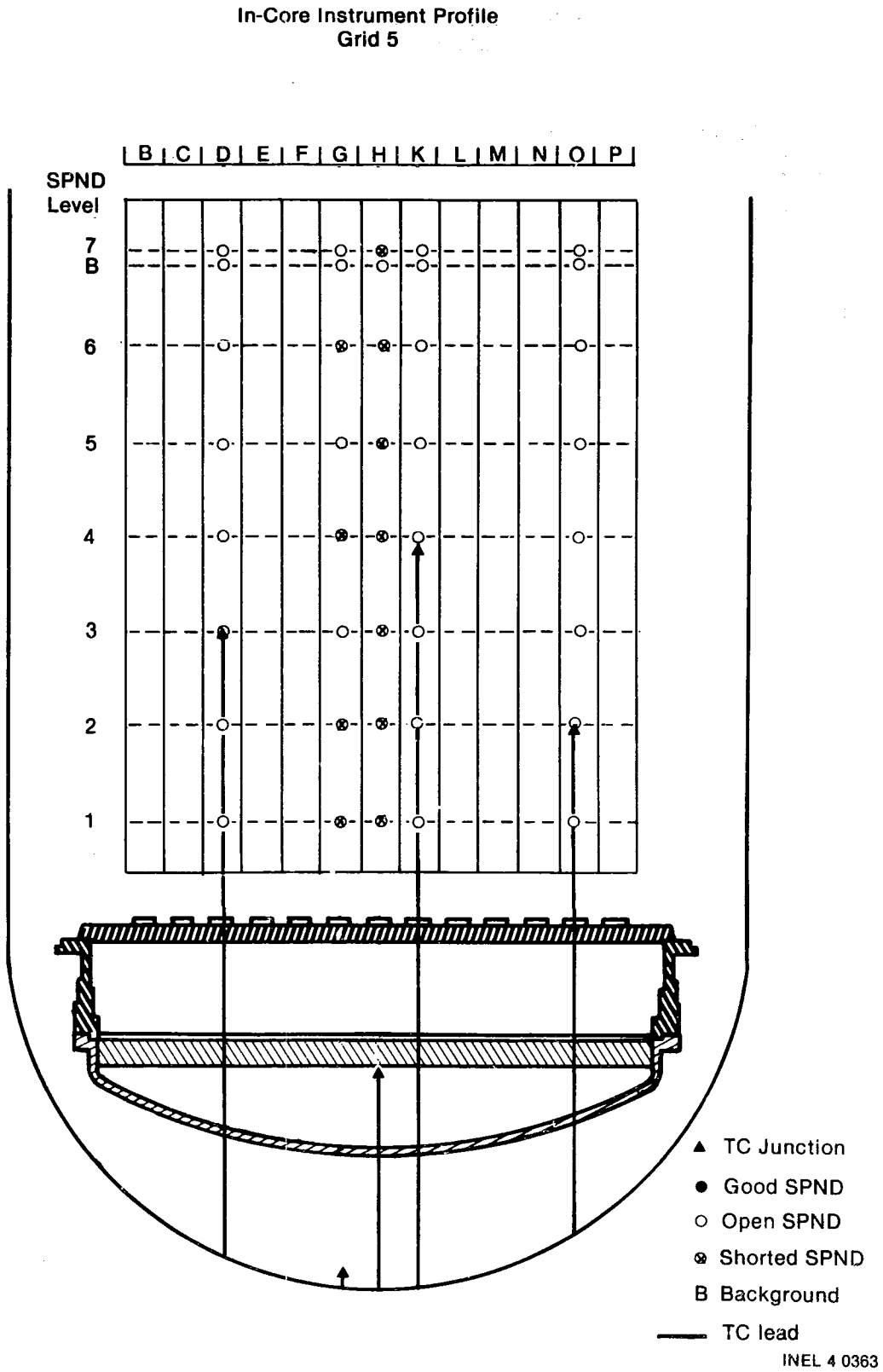

Figure D-6. In-core instrument profile grid 5.

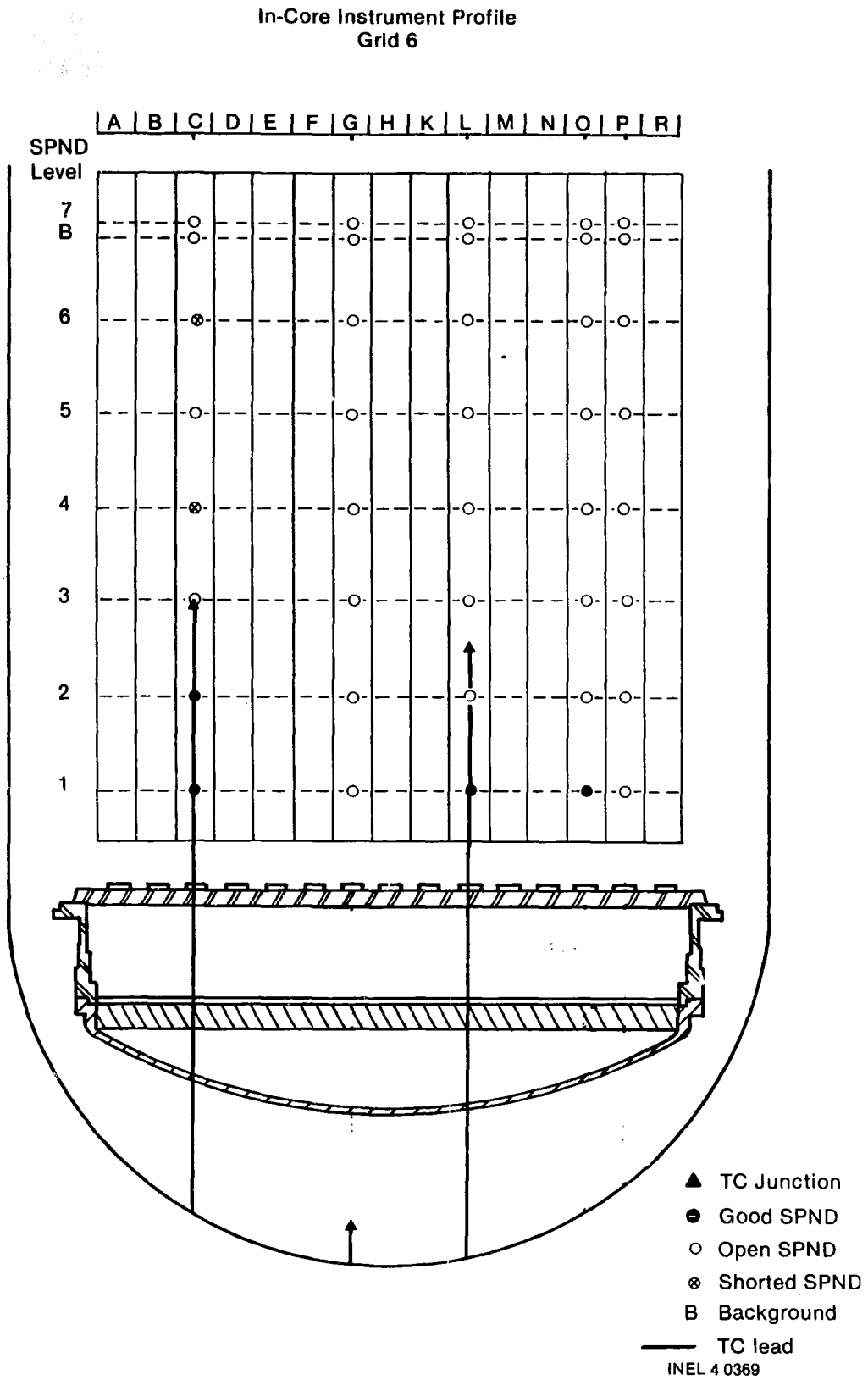

Figure D-7. In-core instrument profile grid 6.

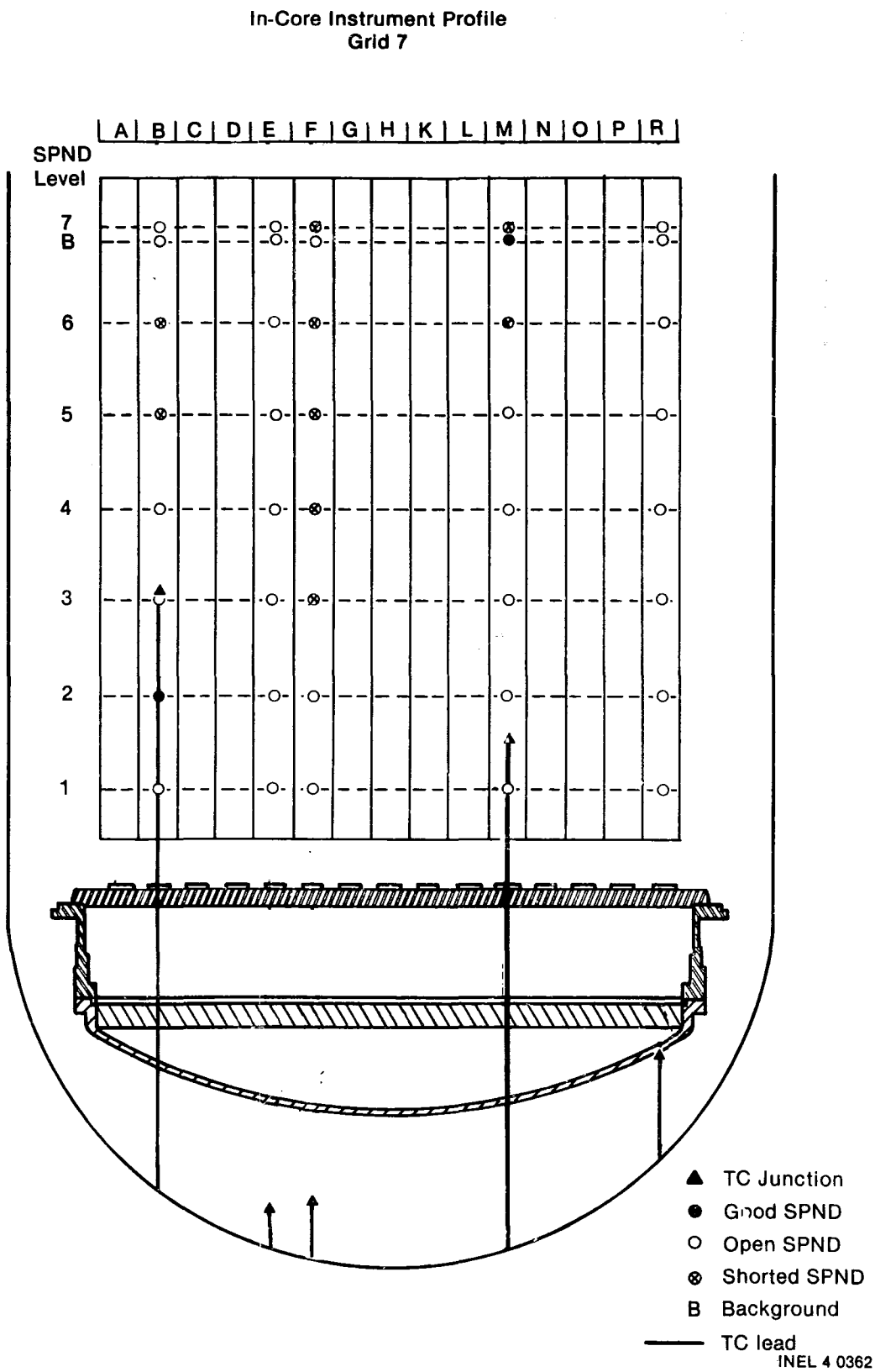

Figure D-8. In-core instrument profile grid 7.

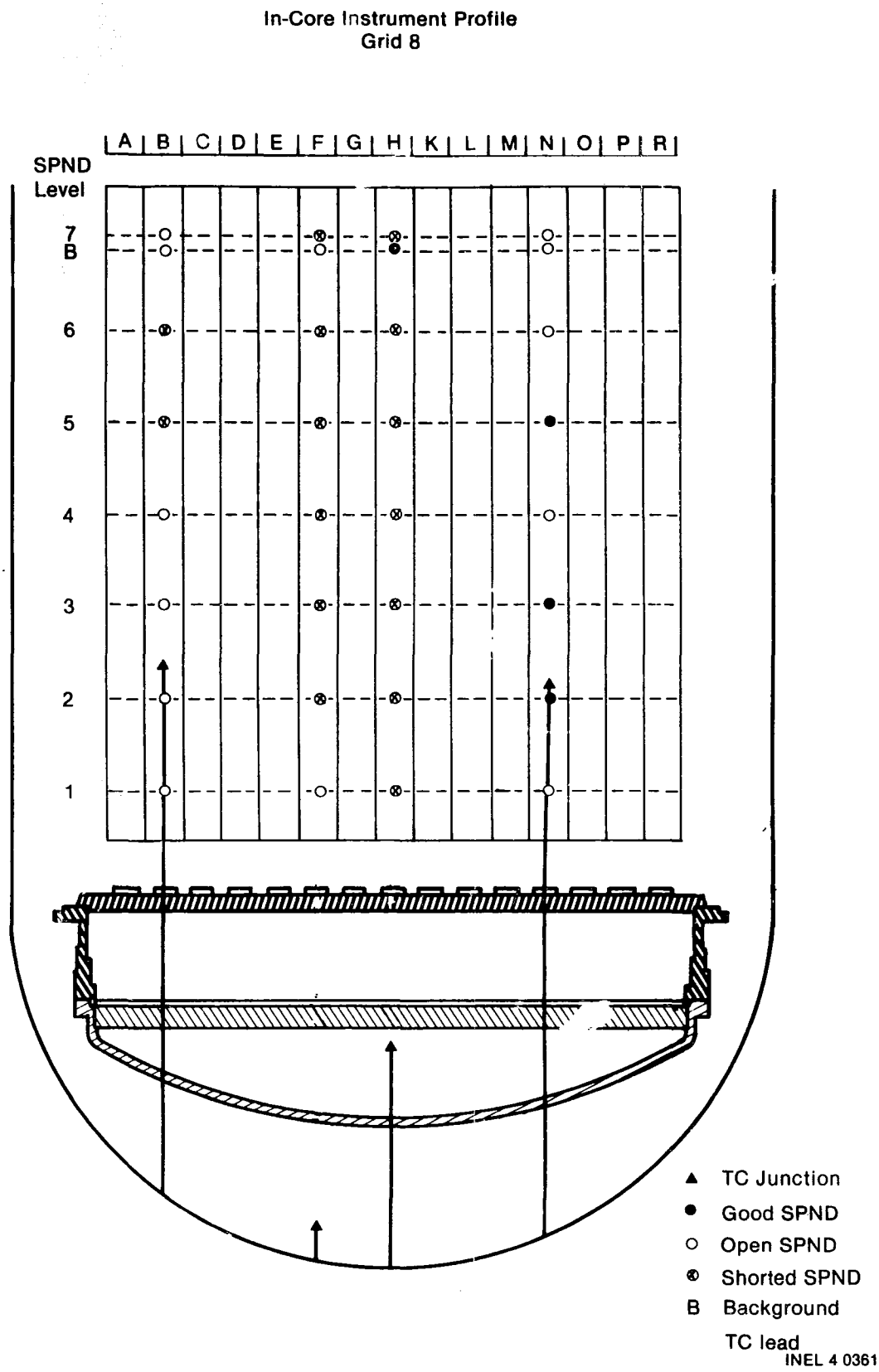

Figure D-9. In-core instrument profile grid 8.

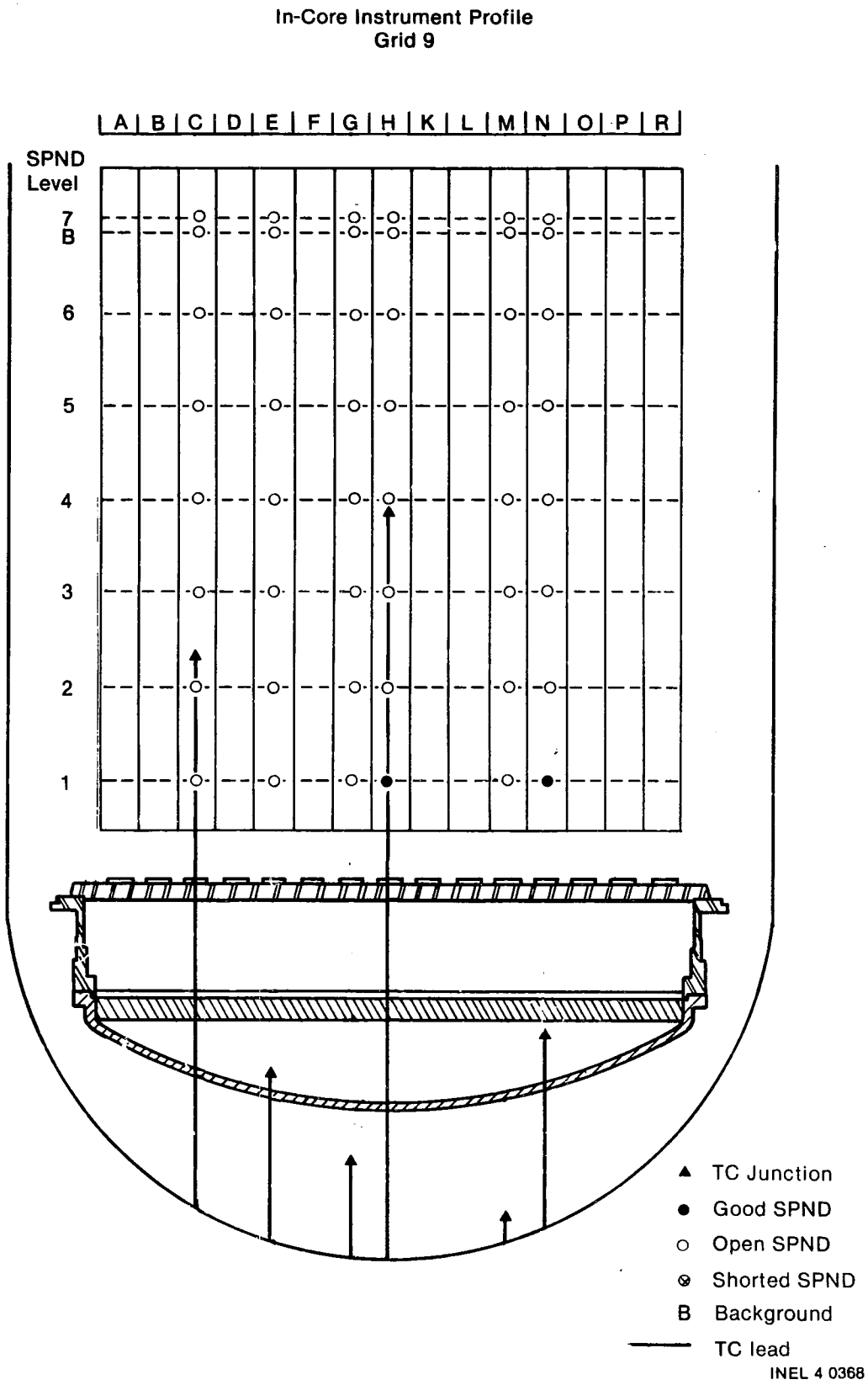

Figure D-10. In-core instrument profile grid 9.

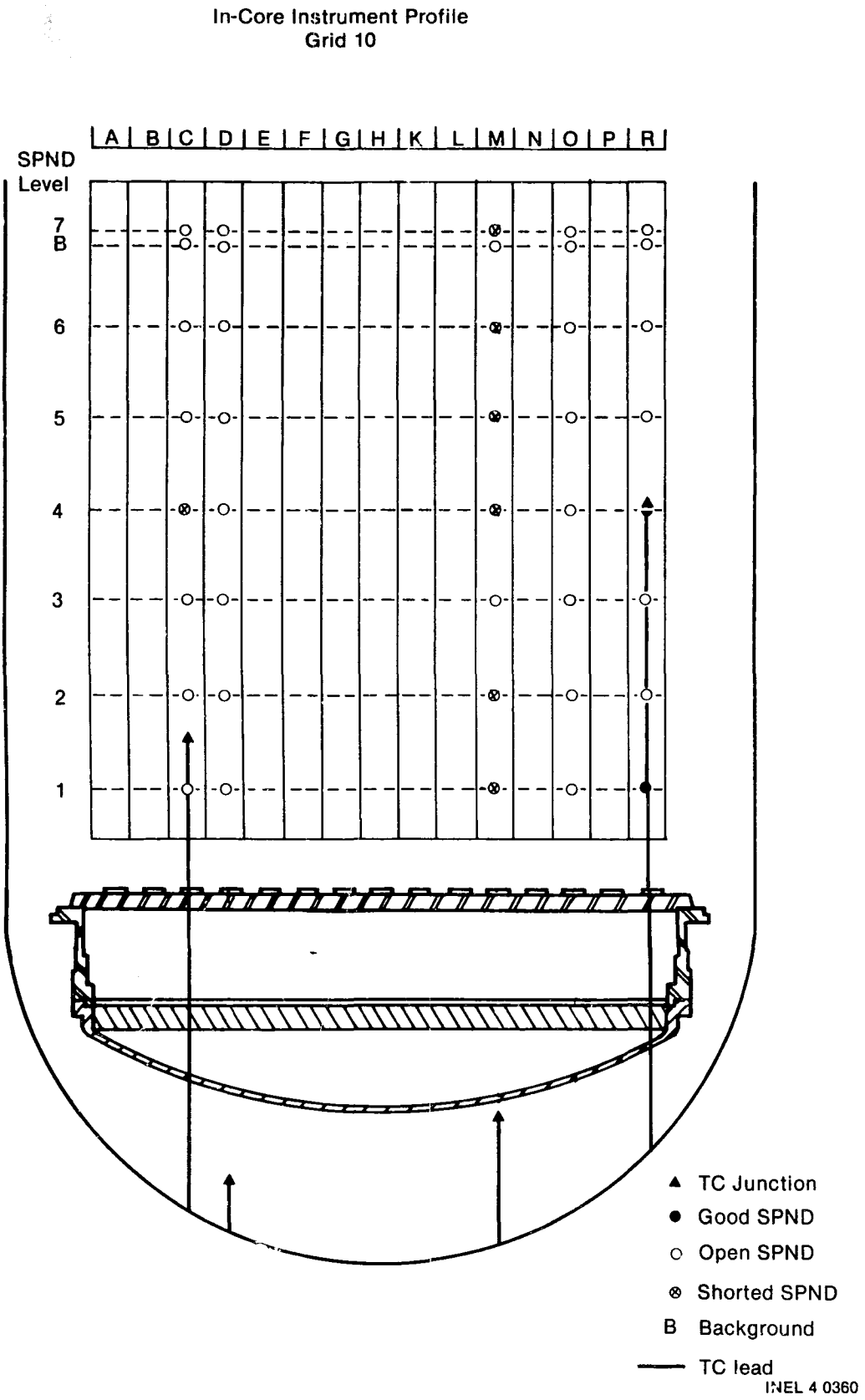

Figure D-11. In-core instrument profile grid 10.

In-Core Instrument Profile
Grid 11

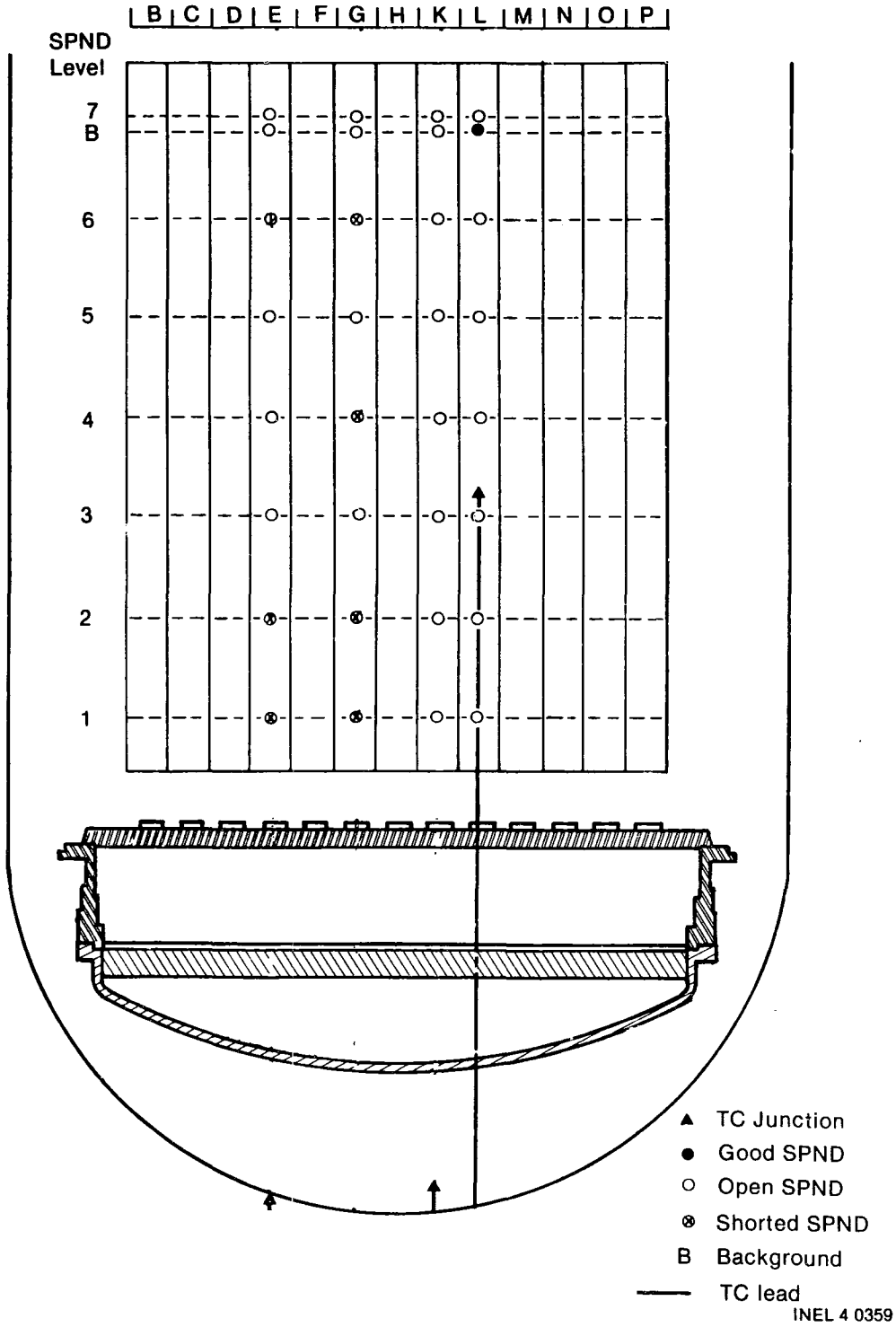

Figure D-12. In-core instrument profile grid 11.

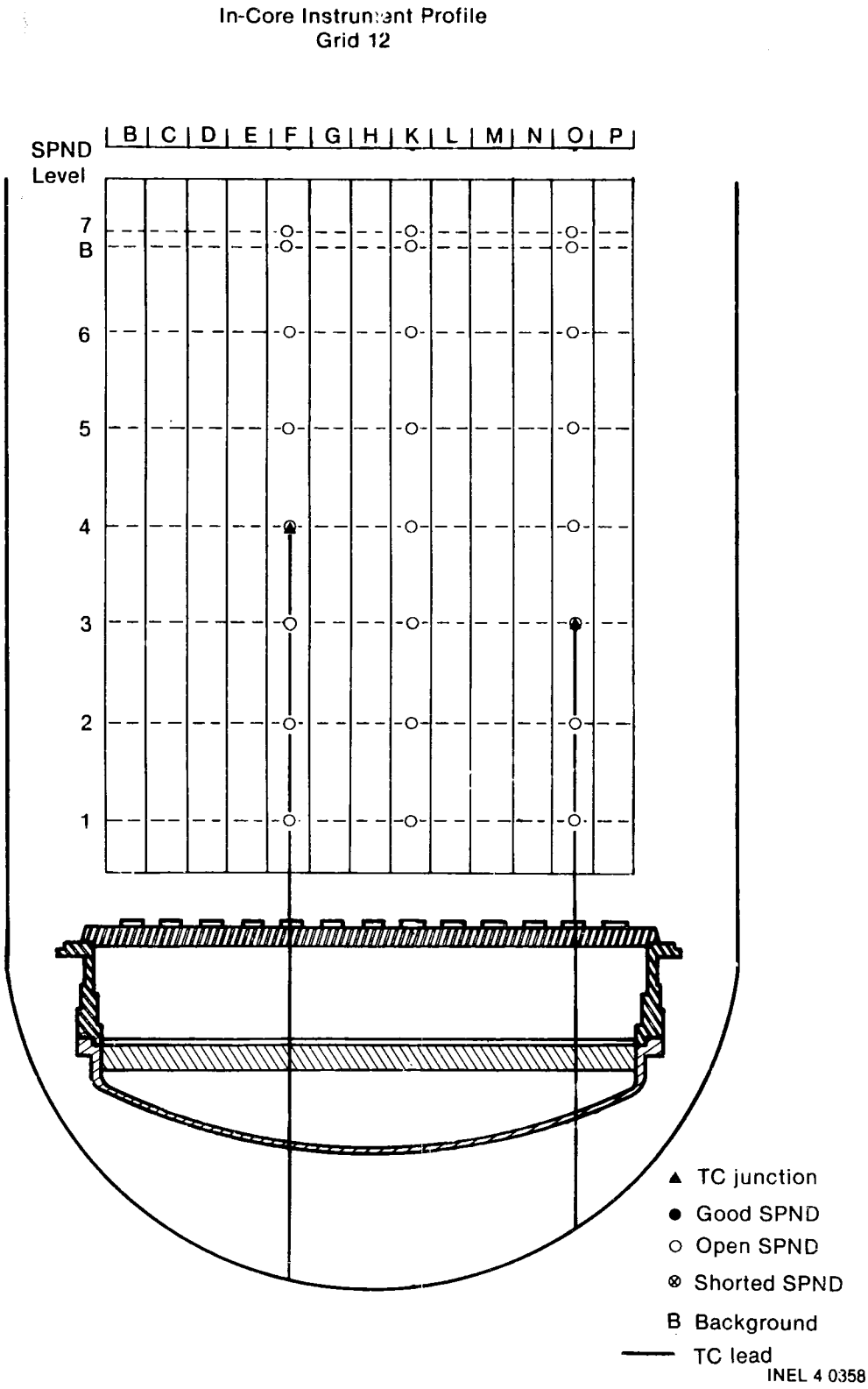

Figure D-13. In-core instrument profile grid 12.

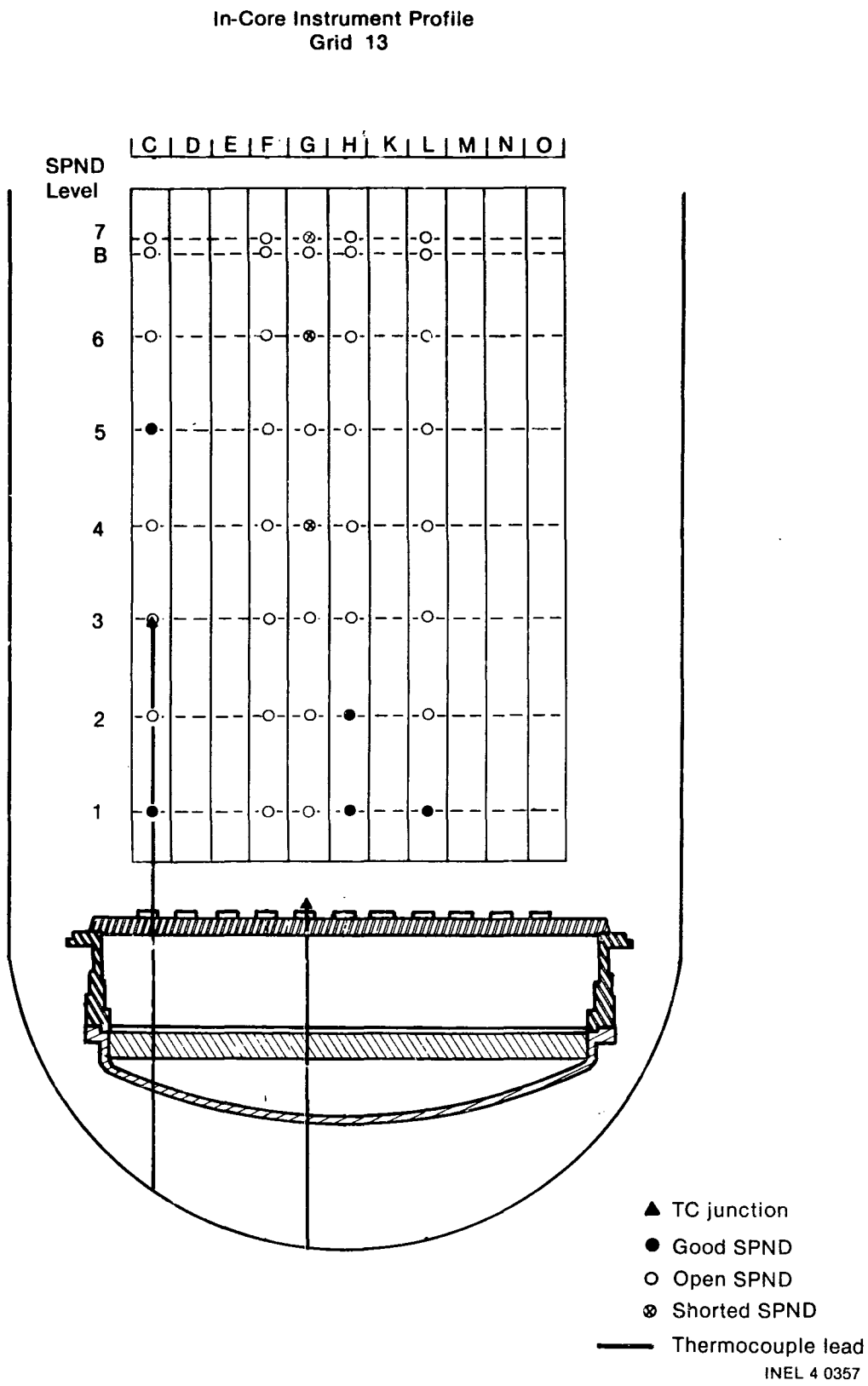

Figure D-14. In-core instrument profile grid 13.

In-Core Instrument Profile
Grid 14

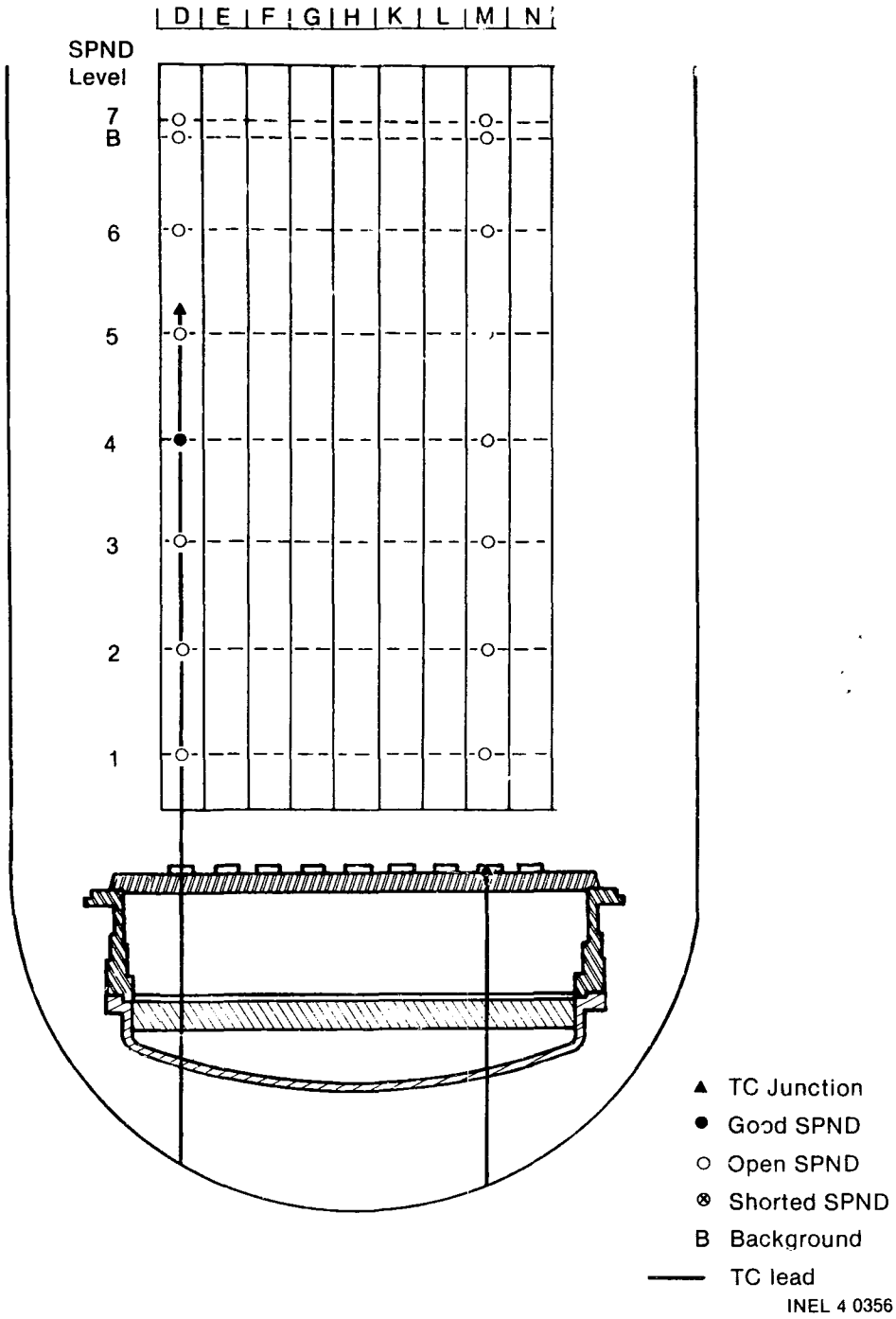

Figure D-15. In-core instrument profile grid 14.