078
42379

LOAN COPY
Return to
TECHNICAL LIBRARY

GEND-INF-065
March 1985

Cy 1

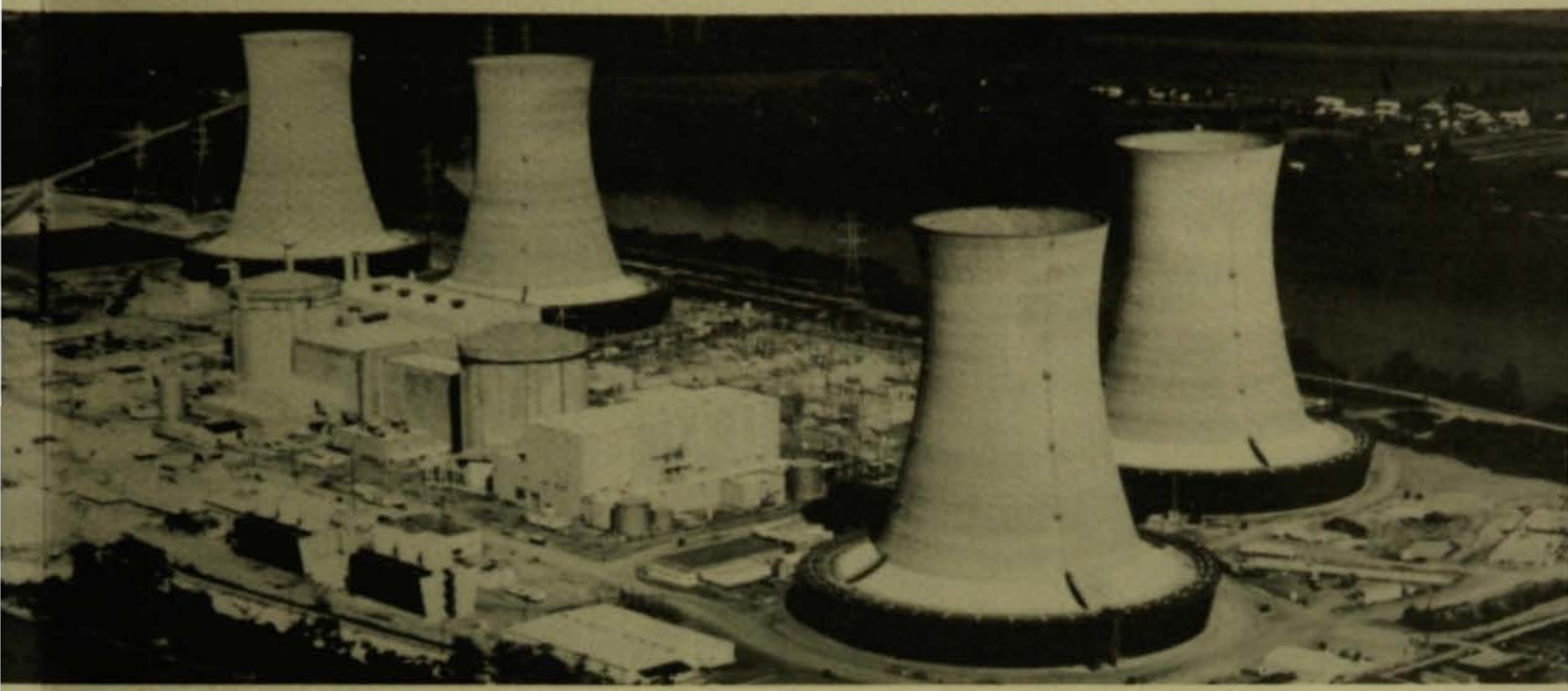

This is an informal report intended for use as a preliminary or working document

GEND

General Public Utilities • Electric Power Research Institute • U.S. Nuclear Regulatory Commission • U.S. Department of Energy

TMI-2 DEFUELING SYSTEM DESIGN DESCRIPTION

Diane E. Falk
Clark E. Swenson

Prepared for the
U.S. Department of Energy
Three Mile Island Operations Office
Under Contract No. DE-AC07-76ID01570

DISCLAIMER

This book was prepared as an account of work sponsored by an agency of the United States Government. Neither the United States Government nor any agency thereof, nor any of their employees, makes any warranty, express or implied, or assumes any legal liability or responsibility for the accuracy, completeness, or usefulness of any information, apparatus, product or process disclosed, or represents that its use would not infringe privately owned rights. References herein to any specific commercial product, process, or service by trade name, trademark, manufacturer, or otherwise, does not necessarily constitute or imply its endorsement, recommendation, or favoring by the United States Government or any agency thereof. The views and opinions of authors expressed herein do not necessarily state or reflect those of the United States Government or any agency thereof.

GEND-INF-065

TMI-2 DEFUELING SYSTEM DESIGN DESCRIPTION

Diane E. Falk
Clark E. Swenson

Published March 1985

Westinghouse Electric Corporation
Waste Technology Services Division
Madison, PA 15663

Prepared for the
U.S. Department of Energy
Three Mile Island Operations Office
Under DOE Contract No. DE-AC07-76ID01570

ABSTRACT

This document provides a summary level description of the TMI-2 Dry Defueling System. Defueling will take place through the IIF above the reactor vessel. A Shielded Work Platform and Shielded Support Structure will be assembled around the IIF. Defueling equipment will be mounted on and operated from the Shielded Work Platform. Defueling operations will progress from fairly simple pick and place operations and vacuuming up to more complex cutting and other debris removal tasks.

ACKNOWLEDGMENTS

Talent and skill from a variety of engineering disciplines were necessary to complete defueling tooling preliminary design. These people are among those who made important contributions to the success of the Project and their efforts are gratefully acknowledged:

C. S. Klanian (Project Manager), C. E. Swenson (Deputy Project Manager), P. F. Fox (Project Manager, AESD), D. D. Meoli (Project Manager, NSID), A. P. Ciez, S. M. Conroy, J. W. Everett, L. Fucich, F. G. Gallo, R. W. Kasparek, T. E. Kemeny, R. M. Kobuck, D. B. Kulik, W. E. Lester, G. P. Michell, V. J. Mickus, E. Nolan, D. J. Racki, K. T. Schara, B. S. Spofford, J. D. Starceski, B. S. Thomas, J. J. Wilhelm, and C. J. Winkler. A special thanks is extended to T. L. Burnside and E. M. Schmura for their efforts in compiling and editing this document.

CONTENTS

ABSTRACT ii

ACKNOWLEDGMENTS iii

INTRODUCTION 1

PROJECT AND SYSTEM DESCRIPTION 3

Reference System 3

Core Mapping 4

TMI-2 Defueling 4

Phase I 5
Phase II 5
Phase III 6

DEFUELING TOOL SYSTEMS 7

Shielded Work Platform 8

Shielded Support Structure 14

Vacuum System 24

Long Handled Tools 32

Heavy Duty Tools 32
Lightweight Tools 40
Long Handled Tool Support Equipment 40

Control System 48

Electrical Power and Control Equipment 51
Hydraulic Power and Control Equipment 58
Air Supply and Control Equipment 58
Viewing System 58
Cable Management System 60

Viewing System 60

PAR Video Equipment 63
PAR System Camera Handling Tools 63
General Reactor Vessel Lighting System 65
Vacuum Nozzle Viewing Equipment 65
Instrumentation and Controls 65

Canister Positioning System 68

Canister Support Sleeve 71
Fuel Canister Seal Cover 74
Main Structure 74
Bearing Assembly 74

Maintenance System 78

Test Assemblies 78

End Effectors 79

Impact Drill 79
Abrasive Saw 80
Cutting Jet (Hydrolaser) 80
Impact Chisel 80
Top Access Fuel Assembly Lifting Tool 80
Side Access Fuel Assembly Lifting Tool 81

Manipulator - Remotely Operated Service Arm (ROSA) 81

Tool Positioning System 82

Tool Racks 83

Support Tools 84

REFERENCES 85

FIGURES

1. Dry defueling system 2

2. Shielded work platform 9

3. Shielded work platform main support structure 10

4. Roller assembly 12

5. Shielded work platform drive system 13

6. Shielded work platform drive unit 15

7. Manual brake 16

8. Jib crane 17

9. Shielded support structure 18

10. Main structure 20

11. Leveling jack 22

12. Service platform 23

13. Off-gas seal cross-section 25

14. Alignment stud 26

15. Vacuum system 27

16. Manually operated grapple tool 29

17. Disconnect tool 30

18. Hose handling tool 31

19. End effector handling tool 33

20. Three point gripper 35

21. Four point gripper 36

22. Grapple 37

23. Single rod shears 38

24. Parting wedge 39

25. Vise grips 41

26. Bolt cutters 42

27. Hook tools 43

28. Socket wrench 44

29. Disposable debris bucket 46

30. Reusable debris bucket, debris bucket funnel, and end fitting wire storage basket 47

31. Debris bucket handling tool 49

32. Debris bucket stand 50

33. P&ID general arrangement 52

34. Single line diagram - electrical power distribution center..... 54

35. Electrical power distribution center..... 55

36. Main control console..... 56

37. Vacuum system control hardware..... 57

38. Viewing system console..... 59

39. Cable management system..... 61

40. PAR camera handling tools..... 64

41. General reactor vessel lighting positioner..... 66

42. Vacuum nozzle camera and support equipment..... 67

43. Canister positioning system elevation view..... 69

44. Canister positioning system plan view..... 70

45. Canister support sleeve elevation..... 72

46. Sleeve handling tool..... 73

47. Fuel canister seal cover..... 75

48. Canister positioning system main structure..... 76

49. Bearing assembly..... 77

TABLES

1. WBS-721 shielded work platform tool list..... 8

2. WBS-711 shielded support structure tool list..... 19

3. WBS-412 vacuum system tool list..... 28

4. WBS-514 long handled tool list..... 48

5. WBS-561 & 564 control system tool list..... 51

6. WBS-612 viewing system tool list..... 62

7. WBS-742 canister positioning system tool list..... 71

8. WBS-782 test assembly tool list..... 79

9. WBS-524 end effector tool list..... 79

10. WBS-534 manipulator tool list..... 81

11. WBS-544 tool positioning system tool list..... 83

12. WBS-554 tool racks tool list..... 84

13. WBS-571 support tools tool list..... 84

TMI-2 DEFUELING SYSTEM DESIGN DESCRIPTION

INTRODUCTION

The Defueling System, illustrated in Figure 1, is intended to remove the loose debris and core materials from the reactor vessel of the Three Mile Island Unit 2 (TMI-2) plant. The core materials exist in a variety of shapes and sizes from full fuel assemblies to rubble small enough to be moved by fluid vacuum pumping. Operations will include sizing the core material and loading and preparing canisters for removal from the reactor vessel. All of the operations within the reactor vessel are within the scope of the Defueling System, while the transfer of canisters will be the responsibility of and described by others. All fuel handling operations and canister loading will take place inside a composite water vessel comprised of the reactor vessel, the core support assembly, and the internals indexing fixture (IIF) with a modified seal. The defueling water level will be maintained 5 ft above the vessel flange. Operators will operate tools from a Shielded Work Platform mounted directly over the IIF. This arrangement allows the shallow end of the fuel transfer canal to be dry during defueling. Background radiation in the defueling canal is expected to be 5 to 10 mR/h, as opposed to 30 to 50 mR/h at the 347-ft, 6-in. elevation. Thus, dry defueling has several advantages over the conventional flooded canal approach. They are: (a) long handled tools become shorter and thus more feasible (25 ft versus 45 ft), (b) all canister loading is done in the vessel to confine all contamination to a limited area, (c) a smaller volume of water needs to be processed by the defueling water cleanup system (DWCS), and (d) the equipment operators on the Shielded Work Platform perform the defueling operations in a lower background radiation field (as opposed to being at the 347-ft, 6-in. elevation).

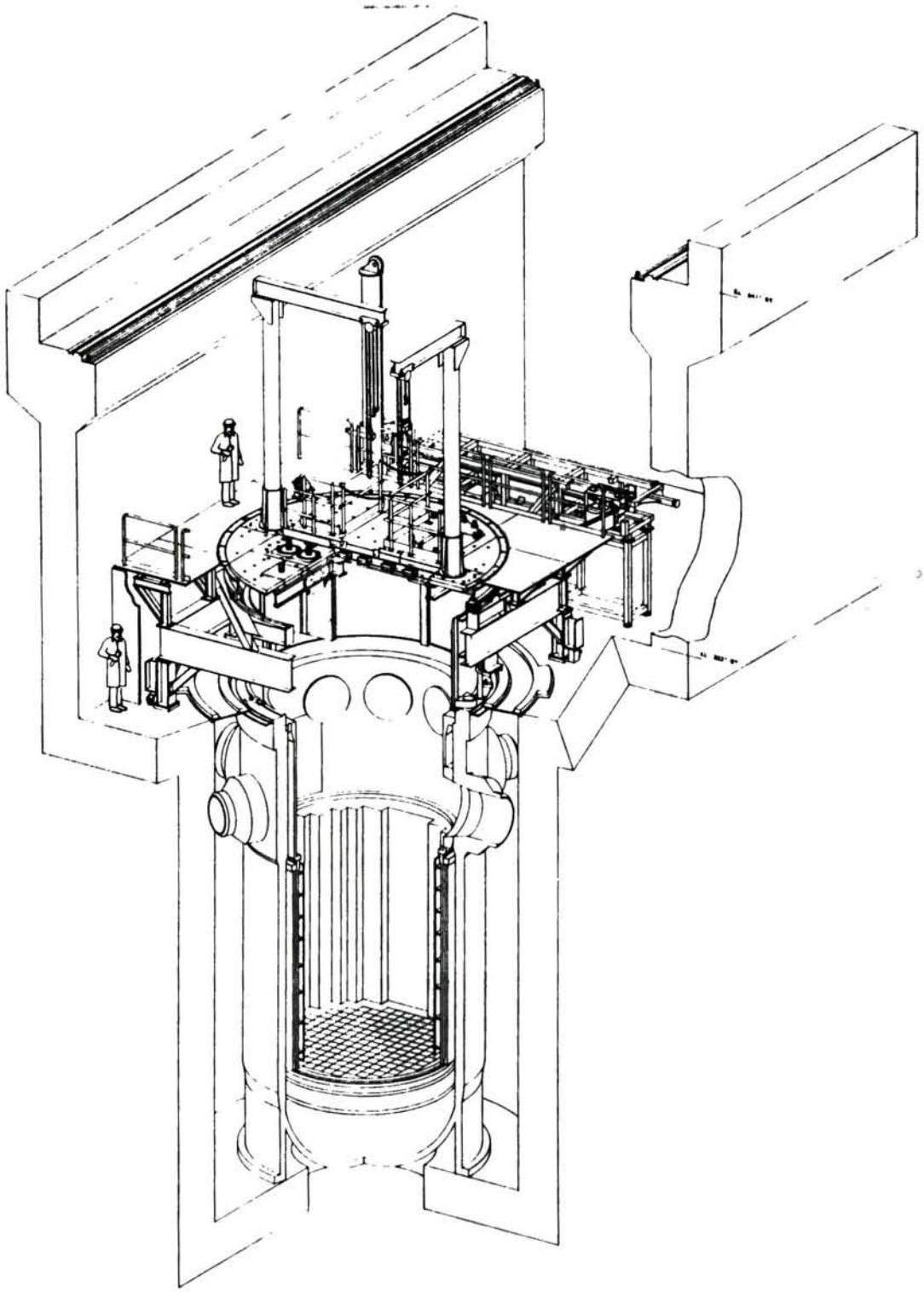

Figure 1. Dry defueling system.

PROJECT AND SYSTEM DESCRIPTION

Reference System

The operators will be standing on the Shielded Work Platform above the reactor vessel flange. This Shielded Work Platform provides shielding so that the contaminated water in the reactor vessel will not be a major exposure source for personnel operating the defueling system tools. The Shielded Work Platform is supported from the refueling canal floor by the Shielded Support Structure. Between the Shielded Work Platform and Shielded Support Structure, various lines for water treatment and air ventilation to control off-gasing are routed in to and out of the reactor vessel. This water treatment and off-gas control piping are stationary and do not impact operation of the Shielded Work Platform.

The Shielded Work Platform has an 18-in.-wide slot through which the long handled tools are operated. This tool working slot width and the Shielded Work Platform shielding should limit the radiation from the core and water to the order of 2 to 5 mR/h while operating the long handled tools. The working slot can be covered by plugs of 6-in.-thick steel should an upset condition exist. These plugs are normally open to gain access to the reactor vessel and to permit lateral movement of the long handled tools to deposit debris in the fuel canisters.

By taking advantage of the shielding provided by the refueling canal walls and the clean stainless steel liner of the canal, exposure due to other radiation sources, such as the painted surfaces in the building, is avoided. Thus, general background radiation levels can be relatively low for the personnel in the refueling canal area.

To transfer canisters loaded with fuel fines, debris, and partial fuel assemblies from the reactor vessel, a shielded canister transfer device is required (see Figure 1). The shielded canister transfer device hoists the radioactive canister out of the water, through the Shielded Work Platform, and into the shielded canister transfer device. The loaded shielded

transfer device translates to the modified fuel transfer system in the deep end of the canal, where it lowers the canister into the transfer system upender.

To minimize water volume, yet provide adequate water shielding for the operations, the water level in the spent fuel pool will be lowered. Because the spent fuel pool is not isolated from the refueling canal, a dam or gate approximately 6 ft high is required at the end of the 322-ft, 6-in. elevation in the refueling canal to isolate the dry defueling system from the water. The shielded canister transfer device passes over the dam. After the fuel canister is transferred into the Fuel Handling Building, it is removed from the fuel transfer system by means of a transfer shield to deposit the canister in an appropriate storage rack location.

Core Mapping

The initial defueling process is a core mapping operation to characterize the TMI-2 core to confirm the overall defueling process philosophy and facilitate core removal. This initial core mapping would be performed after head removal but prior to plenum removal. Equipment used for performing the core mapping existing equipment has been used in previous inspections.

TMI-2 Defueling

Defueling will proceed in three phases. These phases are:

Phase I Removal or rearrangement of debris including end fittings, partial fuel assemblies, spiders, and smaller debris using pick and place methods in conjunction with low capacity long handled tools and the single canister positioning system. These operations will continue until sufficient space is cleared to install the Vacuum System and Canister Positioning System.

Phase II Vacuum fine debris and continue pick and place operations until the long handled tool capabilities have been exceeded.

Phase III Install Manual Tool Positioner and continue defueling operations including fused debris removal and handling large partial fuel assemblies until all debris is removed from the interior of the core support structure.

Phase I

At the beginning of Phase I, the plenum has been removed from the reactor and placed in a stand in the deep end of the refueling canal. The IIF is in place on the reactor vessel flange. The Shielded Support Structure main structure is installed, centered, and leveled. The Shielded Work Platform is assembled on support stands on the 347-ft, 6-in. elevation and then hoisted into place on the main structure. Its drive system and the cable management system are installed. Its service platform is then bolted into place and fuel handling operations can begin. Phase I operations will include:

- Rearrange debris or load into debris buckets using long handled tools until the single canister positioning system (SCPS) can be installed.

- Continue to remove or rearrange debris using SCPS until the Vacuum System and the Canister Positioning System can be installed.

Phase II

Phase II begins with installation of the Canister Positioning System, followed by the Vacuum System. The single canister support bracket is no longer required. Phase II operations include:

- Vacuum fines and small debris directly into canisters.

- Rearrange or remove debris to allow access to vacuumable debris.

- Iterate as required until Manual Tool Positioner is required.

Phase III

Phase III begins with installation of the Manual Tool Positioner to assist long handled tools. Phase III operations include:

- Pick up debris and load into debris buckets within the reactor vessel cavity.

- Break up fused or bonded core components and transfer to fuel canisters in the Canister Positioning System.

- Remove partially intact fuel assemblies. These may either be placed in canisters directly or reduced to a suitable form by using the end effectors and then placed in fuel canisters.

Throughout all defueling phases, fuel, filter, and knockout canisters will be removed and replaced when full.

DEFUELING TOOL SYSTEMS

The start of defueling operations is scheduled for July 1, 1985. The defueling tool systems will be delivered to support the planned operations (see TMI-2 Defueling Section). The tool systems include:

- Shielded Work Platform
- Shielded Support Structure
- Vacuum System
- Long Handled Tools
- Control System
- Viewing System
- Canister Positioning System
- Maintenance System
- Test Assemblies
- End Effectors
- Manipulator
- Tool Positioning System
- Tool Racks
- Support Tools
- Single Canister Positioning System

The arrangement and interfaces of all defueling equipment are shown in Reference 1. The reactor dimensions are shown in Reference 2. A Defueling System Design Specification[3] has been written to cover all tooling. All defueling tooling design activities are based on the GPU Nuclear Technical Specification[4]. Quality requirements are specified in Reference 5. To ensure that a complete tool list is identified, detailed defueling task descriptions have been written[6].

Descriptions of each of the tool systems follow.

Shielded Work Platform

The Final Design Report for the Shielded Work Platform is found in Reference 7. A summary tool list is included in Table 1. The Shielded Work Platform (Figure 2) provides a shielded work area for the defueling, a support for the Manual Tool Positioner, and a method for removing the debris canisters. The Shielded Work Platform is comprised of the following major components:

- Main Support Structure
- Long Handled Tool Slot Rail System
- Shielding Plates
- Decontamination Spray System
- Rollers Assembly
- Cable Drive System
- Off-Gas Seal
- Jib Cranes

TABLE 1. WBS 721 SHIELDED WORK PLATFORM TOOL

Tool/Component	Drawing Number
Shielded Work Platform	1739E46
Main Support Structure	1739E30
Shielding Plates	1739E30
Cable Drive System	1738E91
Jib Cranes	1739E46
Brake	1739E48

The main support structure, shown in Figure 3, is constructed of fabricated stainless steel I-beams. These specially made beams are required to meet space constraints and to resist corrosion. The circular main support structure is divided into three beam assemblies to permit entry into containment: two 140 degree arc segments and one center support structure of two 40 degree arc segments connected by two parallel straight beams. The straight beams are the main load carriers and form the sides of the long handled tool slot rail system.

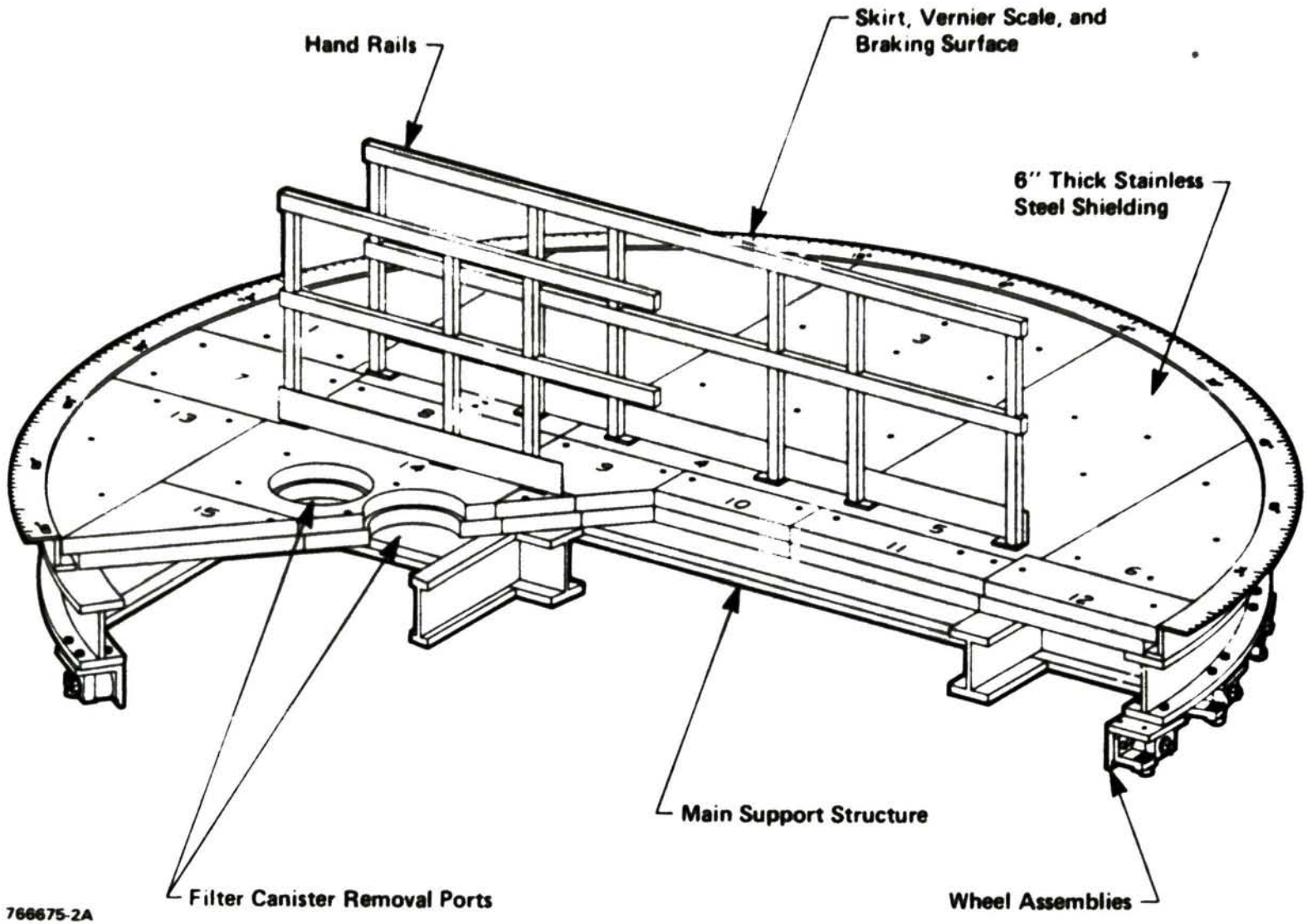

Figure 2. Shielded work platform.

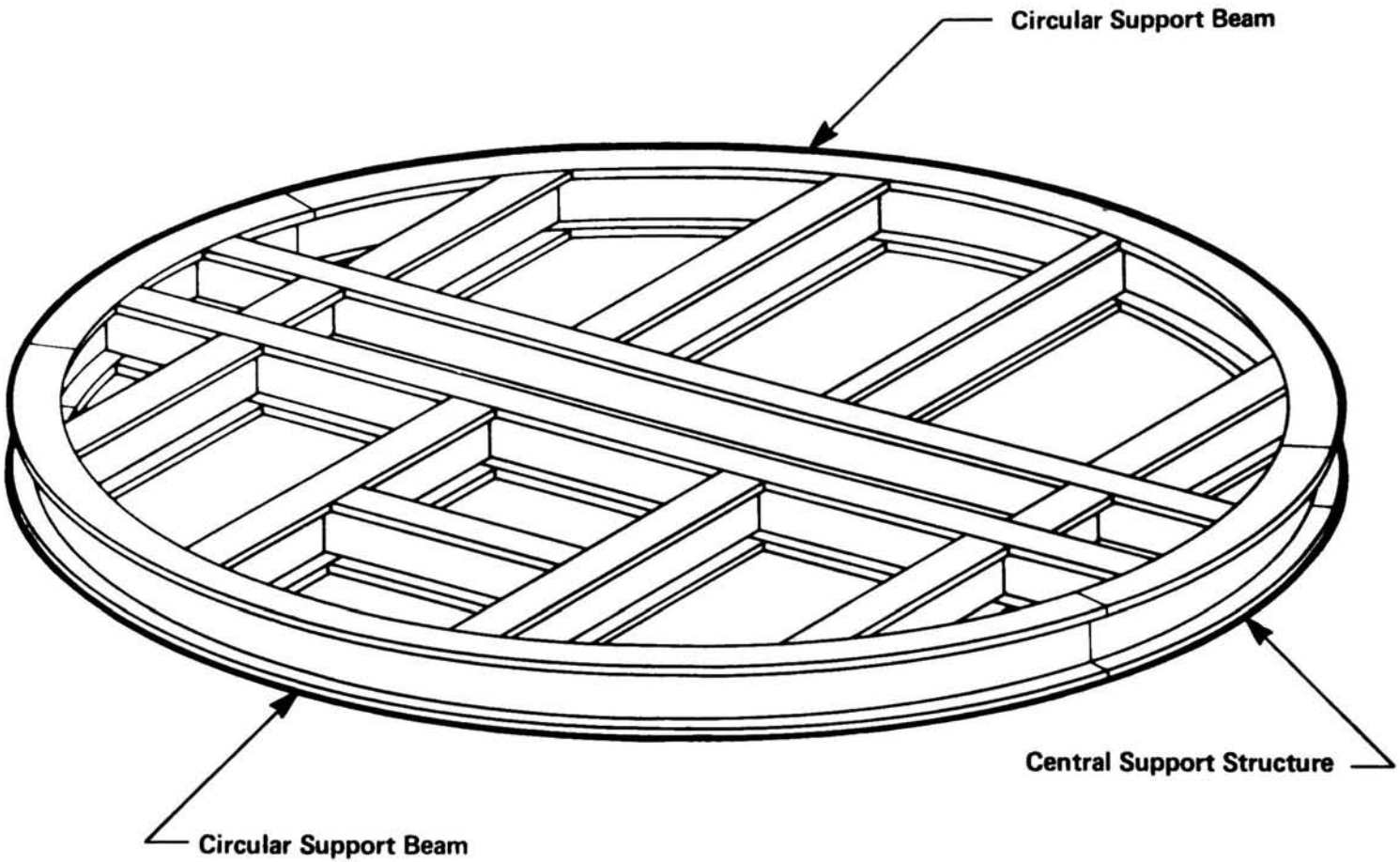

766629-3B

Figure 3. Shielded work platform main support structure.

The long handled tool slot rail system provides linear motion for the Manual Tool Positioner and the Single Canister Support Bracket. The rail system consists of two Thomson rails supported by columns bolted to the two straight I-beams. Twin pillow blocks are installed on these rails and they support the Single Canister Support Bracket and the Manual Tool Positioner.

Surface and vertical shielding are used to reduce the radiation dose rates. Each horizontal surface shielding section is comprised of two 3-in.-thick stainless steel plates. Each section rests on the top flanges of the beams in the main support structure. Three round ports are provided to remove the two filter canisters and the fuel or knockout canisters in the Canister Positioning System. The vertical shielding is located at these three ports to block shine as canisters are removed from the reactor vessel. These 5-in.-thick plates extend from the bottom of the surface shielding to about 2 ft below the water level.

The decontamination spray system flushes radioactive debris from the surface of the canisters, end effectors, long handled tools, and other equipment as each item is removed from the reactor vessel. All construction is stainless steel tubing, fittings, nozzles, and flexible hose material.

Twenty two 5-in.-diameter rollers provide the rotational capability for the Shielded Work Platform. A typical roller assembly, bolted to the underside of the main support structure, is shown in Figure 4. The rollers are mounted on shoulder bolts (axles) pressed into the roller housing. Also shown in Figure 4, a set of cam followers are mounted on the roller carriers. These smaller rollers provide the restraining force to keep the work platform centered.

The cable drive system (Figure 5) rotates the Shielded Work Platform 180 degrees in either direction from a nominal position at a speed between 0 and 0.3 rpm. Two cables are attached to the Shielded Work Platform 220 degrees apart (4 and 8 o'clock positions). These cables leave the Shielded Work Platform to sheaves mounted on the southwest and southeast

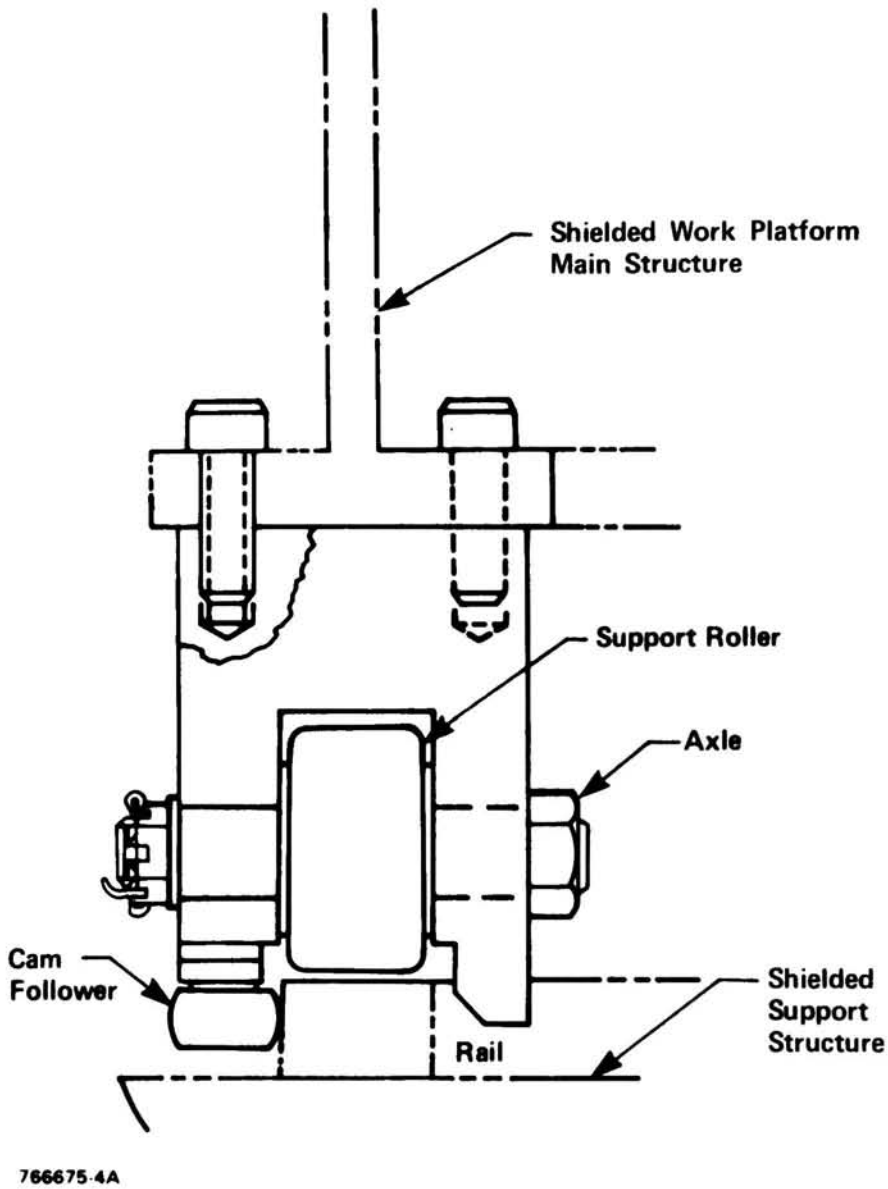

Figure 4. Roller assembly.

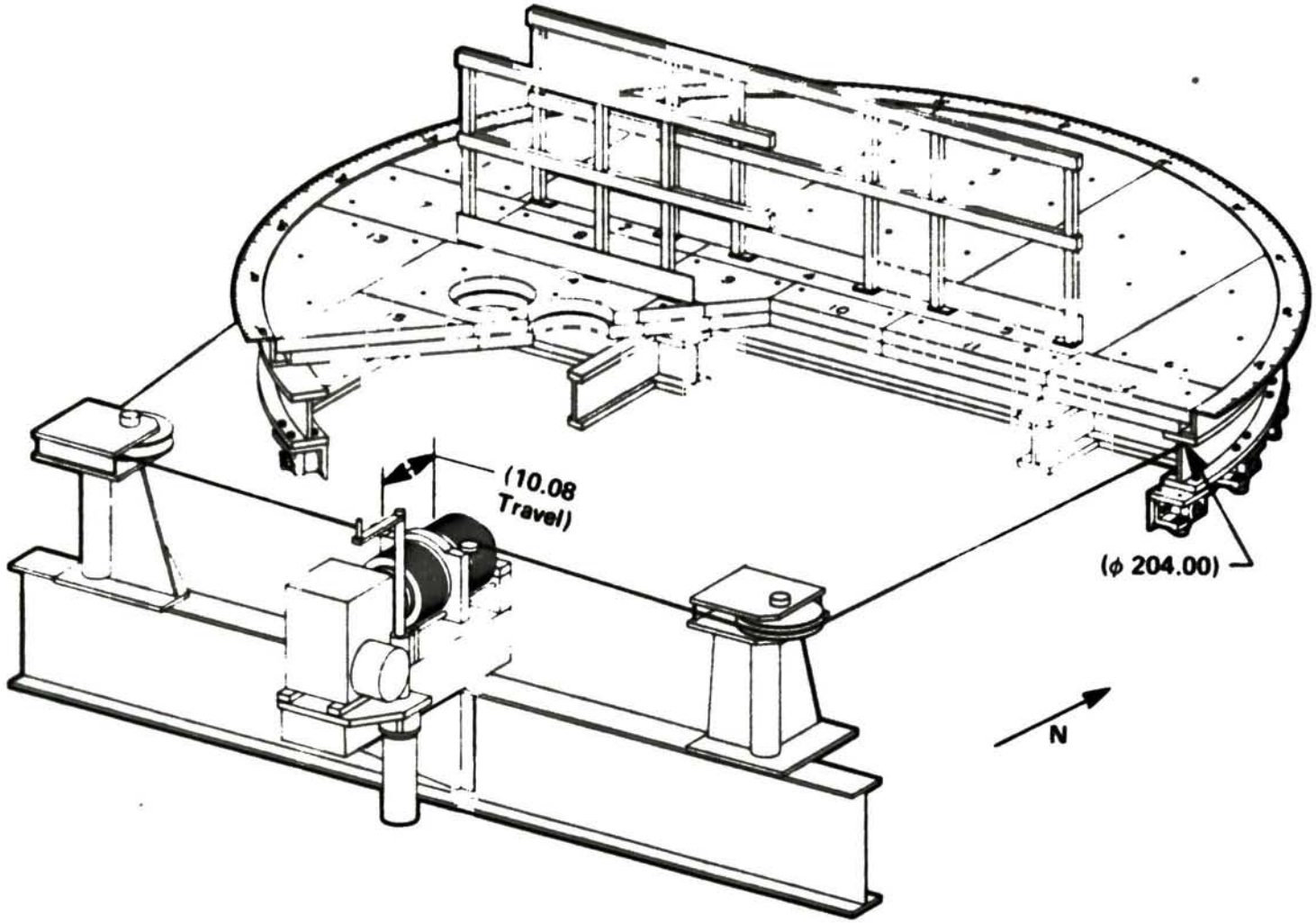

766629-9A

Figure 5. Shielded work platform drive system.

corners of the Shielded Support Structure and then wrap around the drive drum.

Rotation of the Shielded Work Platform is actuated by rotating the drive drum (Figure 6) which takes up the cable in one direction and pays out the cable in the other. A servomotor powers the drive drum through a double worm gear reducer. The gear reducer has two input shafts, one for the motor and one for the manual drive handle.

A manual disc brake (Figure 7) secures the Shielded Work Platform in the static position. The skirt on the Shielded Work Platform serves as the disc. The skirt also serves as a manual position indicator. The skirt has degree markings to indcate angular position relative to the indicator on the Shielded Support Structure.

The off-gas seal minimizes the space between the Shielded Support Structure rail and the bottom flange of the Shielded Work Platform. The design uses 1/8-in.-thick plates to close the gap between the wheel housings, thus minimizing the air flow between the beams and the rails.

Two jib cranes are mounted on the Shielded Work Platform to aid the operators in manipulating the long handled tools in the long handled tool slot. The maximum lift of the jib cranes above the work platform, shown in Figure 8, is 13 ft, 6-in. and the capacity is 1 ton.

Shielded Support Structure

The Final Design Report for the Shielded Support Structure is found in Reference 8. A summary tool list is included in Table 2. The Shielded Support Structure illustrated in Figure 9 is a rectangular-shaped beam structure that circumscribes the Internals Indexing Fixture (IIF). This structure is supported on the refueling canal floor and extends upward approximately 7 ft to the 331-ft, 5-in. elevation. The primary function of the Shielded Support Structure is to support the Shielded Work Platform. The interface to the Shielded Work Platform is a circular rail (203 in. diameter) which is supported by an octagonal beam arrangement.

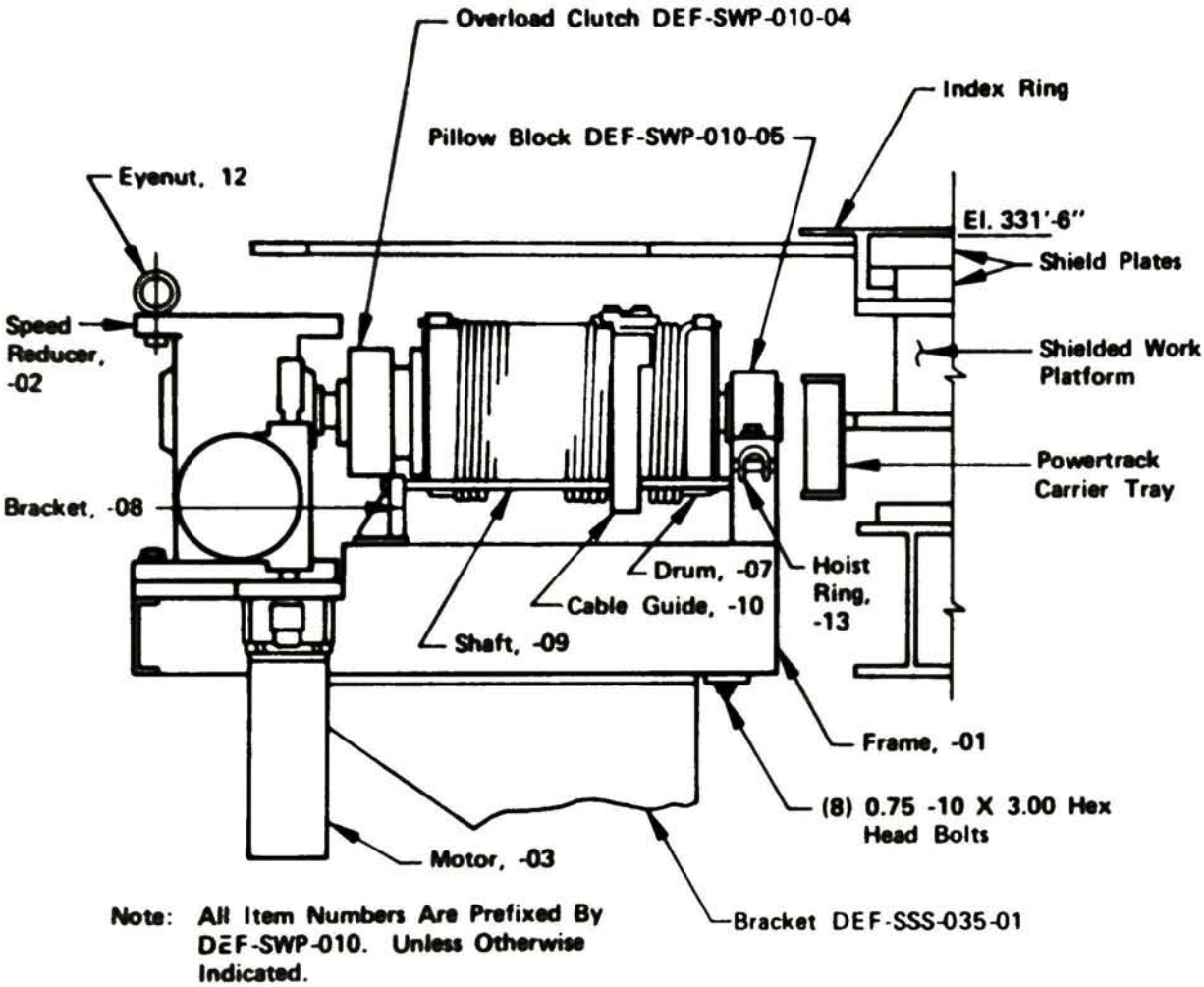

Figure 6. Shielded work platform drive unit.

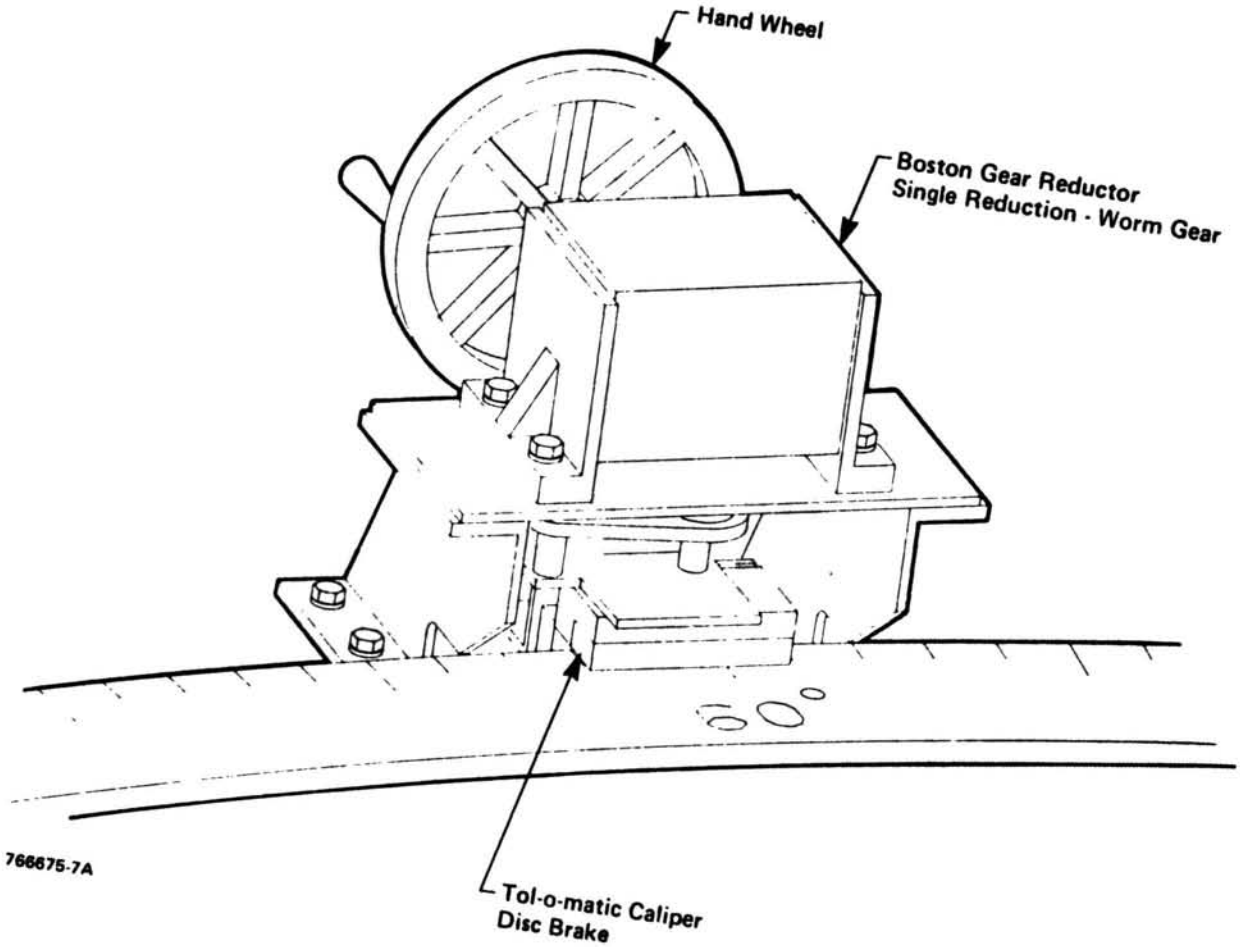

Figure 7. Manual brake.

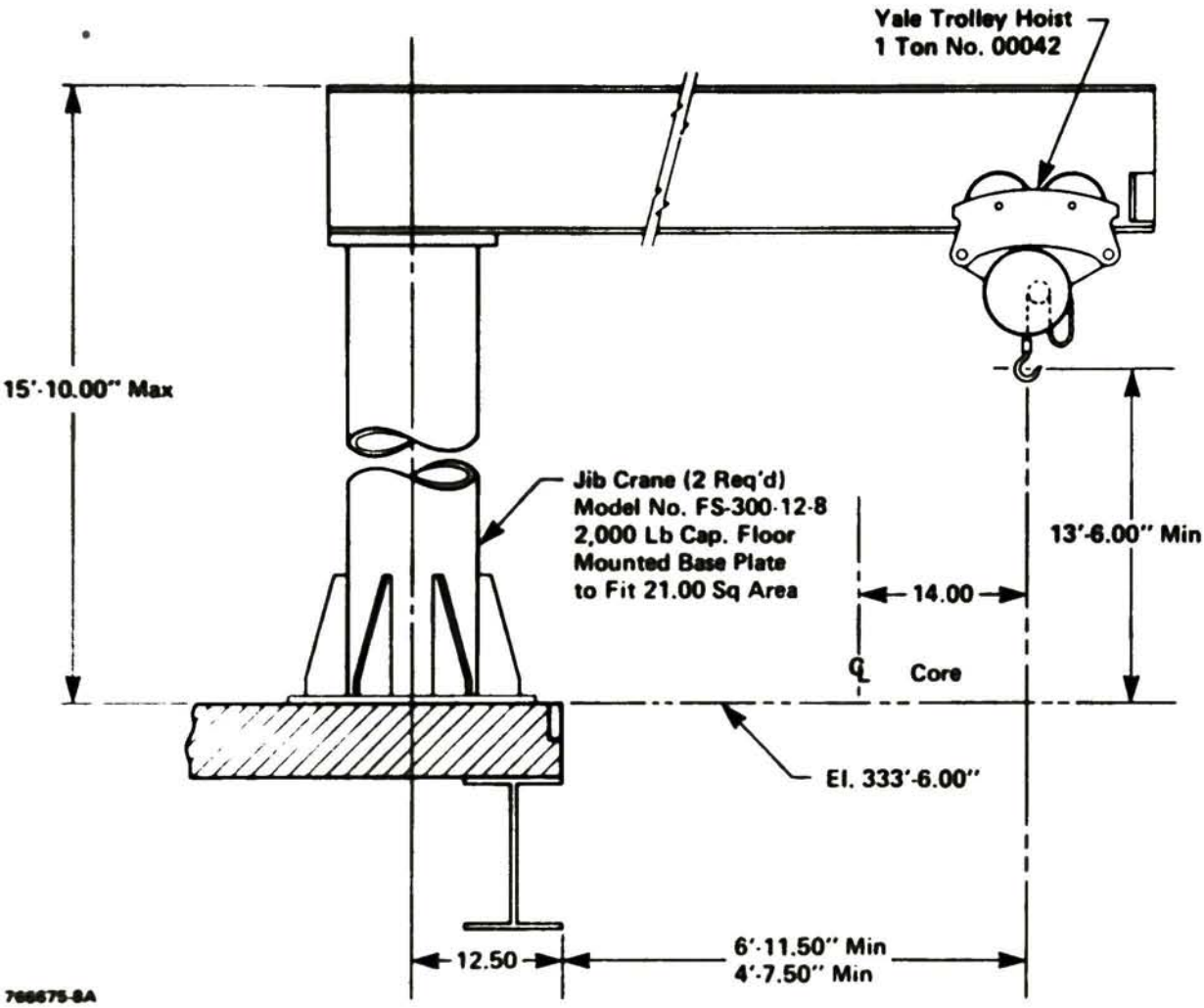

Figure 8. Jib crane.

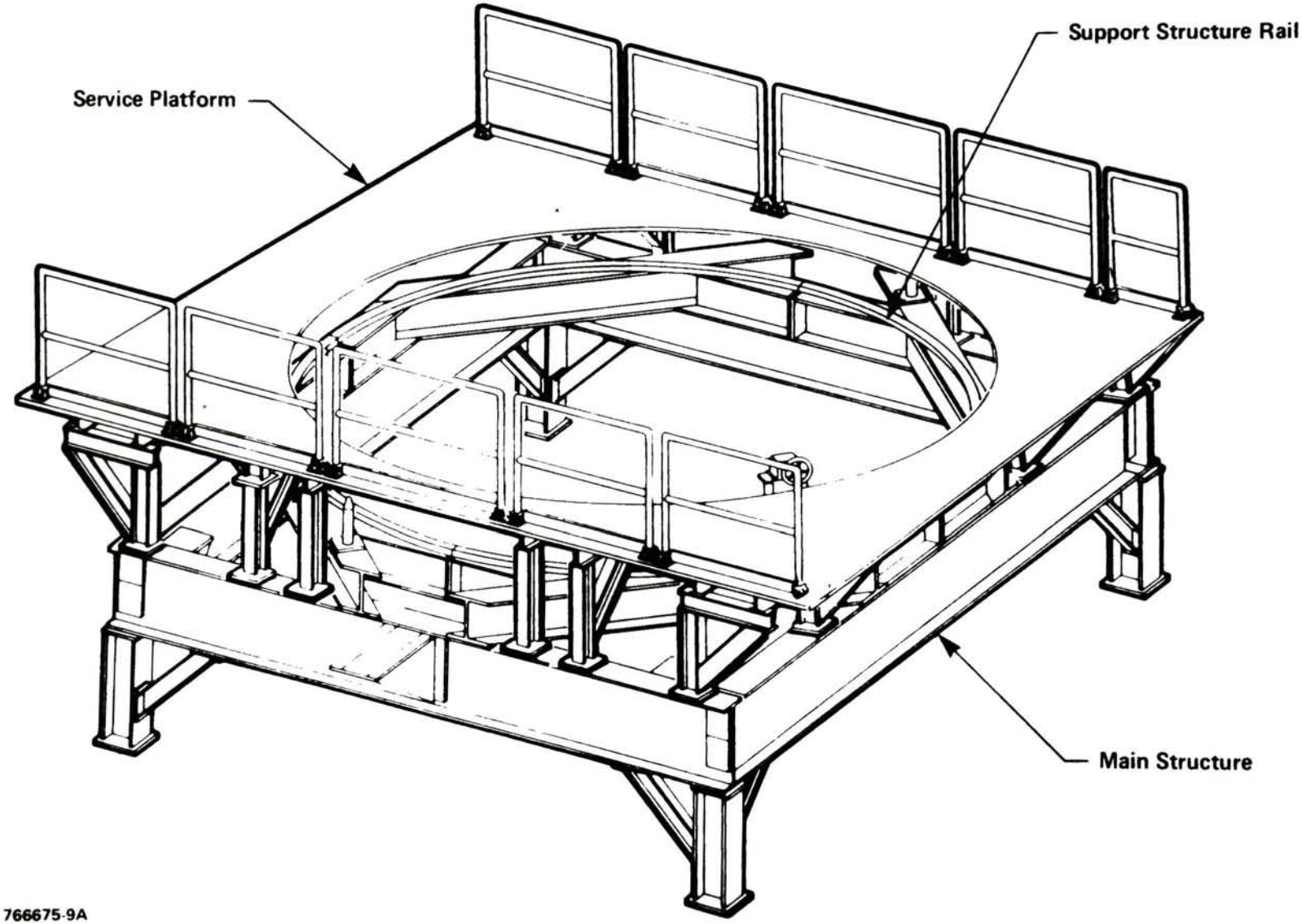

Figure 9. Shielded support structure.

TABLE 2. WBS 711 SHIELDED SUPPORT STRUCTURE TOOL LIST

Tool/Component	Drawing Number
Shielded Support Structure	1738E76
Main Structure	1738E73
Support Structure Rail	1738E37
Service Platform	1738E75
Vertical Shielding	1738E82
Piping	1738E80
Off-Gas Seal	1738E74
Alignment Stud	1738E36

The Shielded Support Structure also provides a stationary service platform area for tool staging at the Shielded Work Platform elevation. Piping, off-gas seal, and shielding are included in the Shielded Support Structure. The piping includes the DWCS, off-gas control system, and bubbler system piping. The off-gas seal will minimize the intake flow area in the Shielded Support Structure and Shielded Work Platform region. This will ensure the off-gas system is effective in containing fission gases. Shielding plates are located beneath the service platform and along the north end of the Shielded Support Structure to reduce the radiation levels in operator work areas. The Shielded Support Structure is fabricated using welded and bolted connections so that it can be transported into the Reactor Building through the personnel hatch.

The Shielded Support Structure is comprised of 6 major components:

- Main Structure
- Support Structure Rail
- Service Platform
- Vertical Shielding
- Piping
- Off-Gas Seal

The main structure, shown on Figure 10 is a 17-1/2 ft x 21 ft x 7 ft (height) assembly constructed of ASTM-A36 low carbon steel columns. The

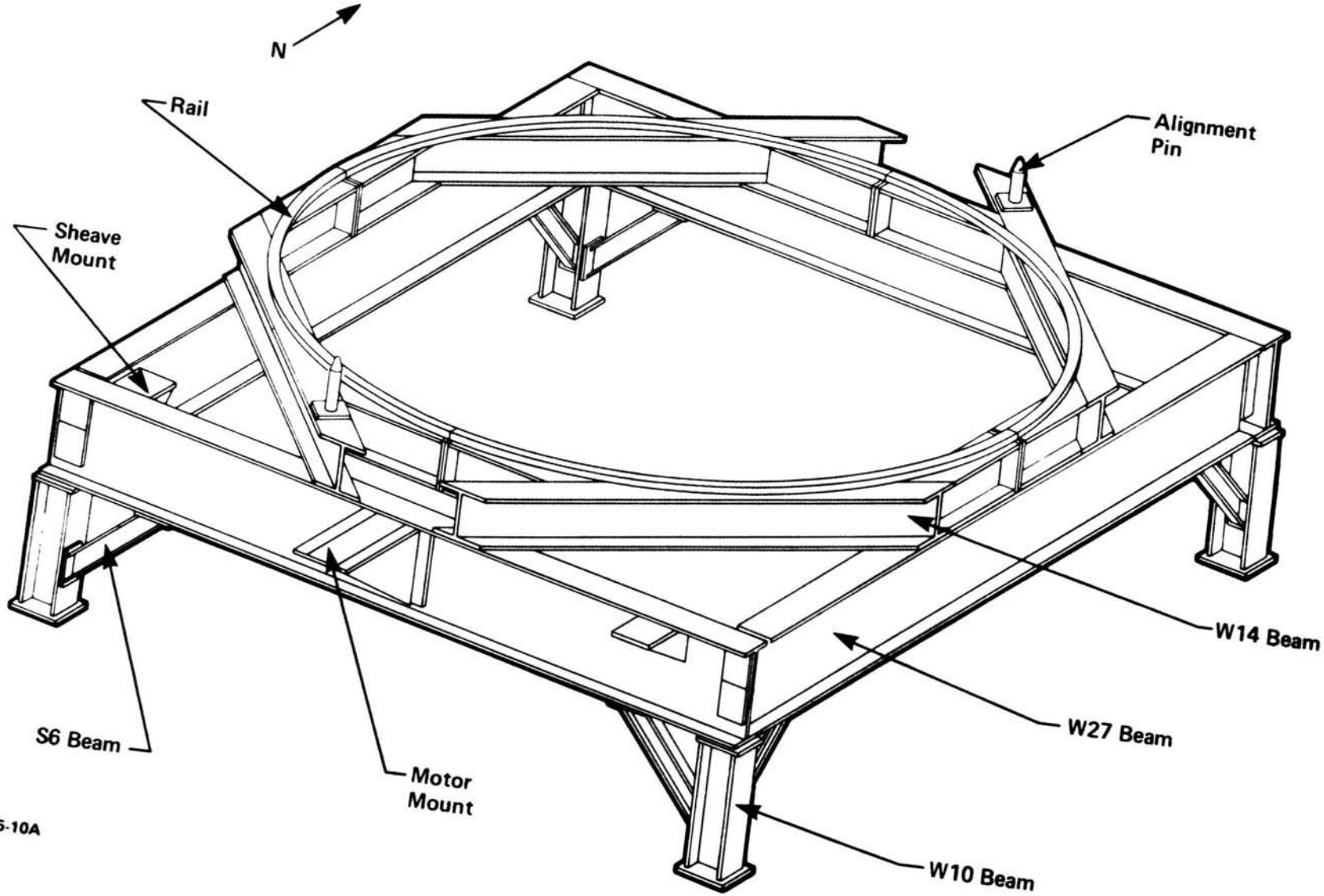

Figure 10. Main structure.

main structure is supported on the refueling canal floor by four vertical columns. Located at each of these columns is a leveling jack and shim arrangement (Figure 11) to level the Shielded Support Structure. When used with a leveling transit, this system can level the Shielded Support Structure to within 1/16 in.

The columns support a rectangular beam structure of W27 beams. This rectangular structure provides support for an octagonal beam array of W14 beams. This beam array supports the circular support structure rail. The support structure rail is a 2-in.-high by 3-in.-wide bar of 18% nickel maraging steel (200 grade). The bar is age hardened to achieve a Rockwell "C" hardness of 45. The support structure rail will be fabricated in four sections and bolted to the main structure. The main structure provides three mounting brackets for the work platform drive system, and two removable alignment pins to aid in the installation of the Shielded Work Platform. These pins will be removed after the Shielded Work Platform is installed.

The service platform is field connected to the main structure. The primary function of the service platform (shown on Figure 12) is to provide a staging area for personnel and equipment at the Shielded Work Platform elevation. The service platform deck consists of 3-in.-thick carbon steel plates which provide shielding and 1/4-in.-thick stainless steel diamond plate decking. Removable handrails are located on the north and south sides of the service platform deck.

A 1 in. diameter pin and an indicator are located at the 0 degree reference position on the service platform. These will assist in positioning of the Shielded Work Platform in the "jog" mode. A mounting area for the manual brake provided by the Shielded Work Platform is located at the 60 degree reference position.

The vertical shielding is field connected to the main structure. The vertical shielding consists of 2-in.-thick carbon steel plates on the north side of the Shielded Support Structure. They extend from the refueling

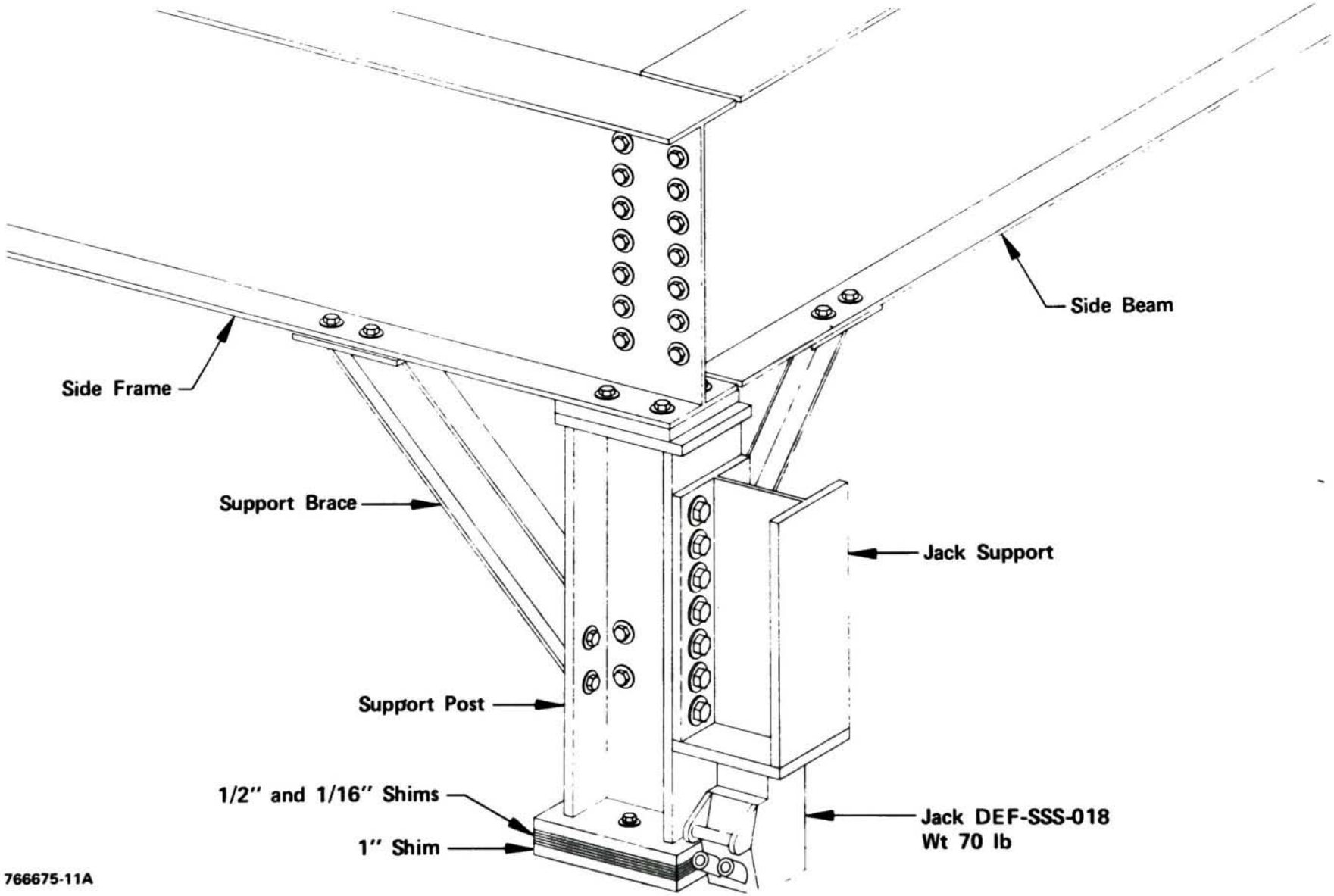

Figure 11. Leveling jack.

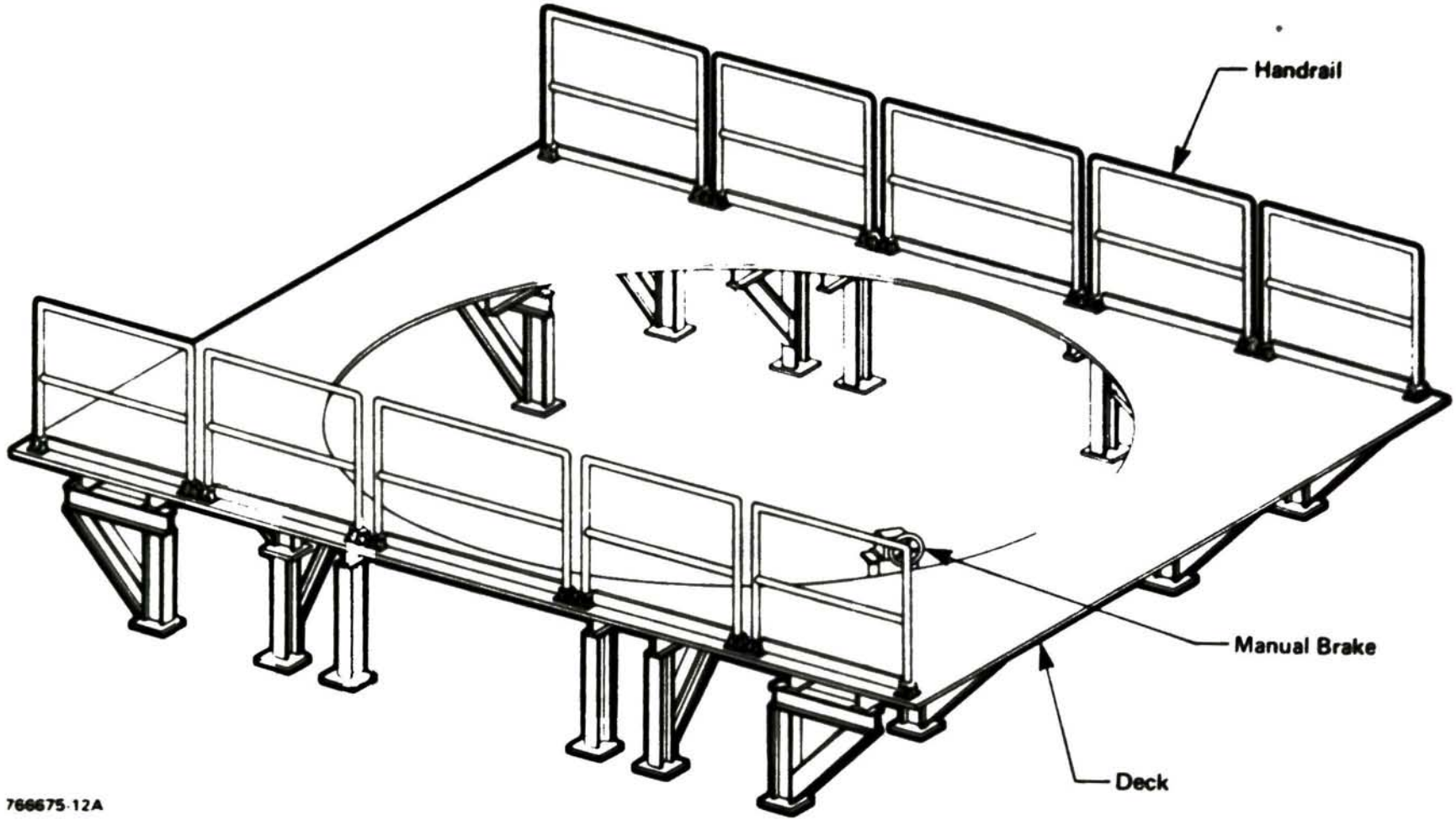

Figure 12. Service platform.

canal floor to the service platform deck leaving a 1 in. gap between the plates and the canal walls. The plates are butted together at assembly and have a maximum gap of 1/4 in. between the plates. The gap helps to simplify installation and removal of the plates, yet maintains acceptable radiation levels. A spanner beam over the seal plate supports the interior shielding panels. This beam eliminates any loading of the seal plate by transferring the load through the spanner beam to the refueling canal floor.

The off-gas seal (Figure 13) minimizes the air flow gaps among the IIF, the Shielded Support Structure and the Shielded Work Platform. Minimizing the gaps reduces the off-gas blower capacity requirements. The off-gas seal consists of two major components: a rotating upper seal assembly provided by the Shielded Work Platform and a stationary lower seal. The lower seal is fabricated in four sections. The two seals form a nominal 1-1/2 in. gap between the seal and the IIF and they provide penetrations for all piping.

The piping is routed from inside the IIF through the off-gas seal to the DWCS, the off-gas control system, and the bubbler system. Flanged pipe connections are incorporated into the piping designs to facilitate Reactor Building handling.

At two stud hole locations, stainless steel alignment studs will be installed in the reactor vessel flange to position the Shielded Support Structure. The alignment stud is illustrated in Figure 14. The seal plug bolts at the two locations are removed to install the alignment studs. After the studs are installed, the main structure can be lowered into place.

Vacuum System

The Final Design Report for the Vacuum System is found in Reference 9. A summary tool list is included in Table 3. The Vacuum System illustrated in Figure 15 is used in the TMI Dry Defueling System to remove debris from the TMI-2 reactor vessel. The Vacuum System consists of a long handled tool (that incorporates the nozzle assembly), the knockout

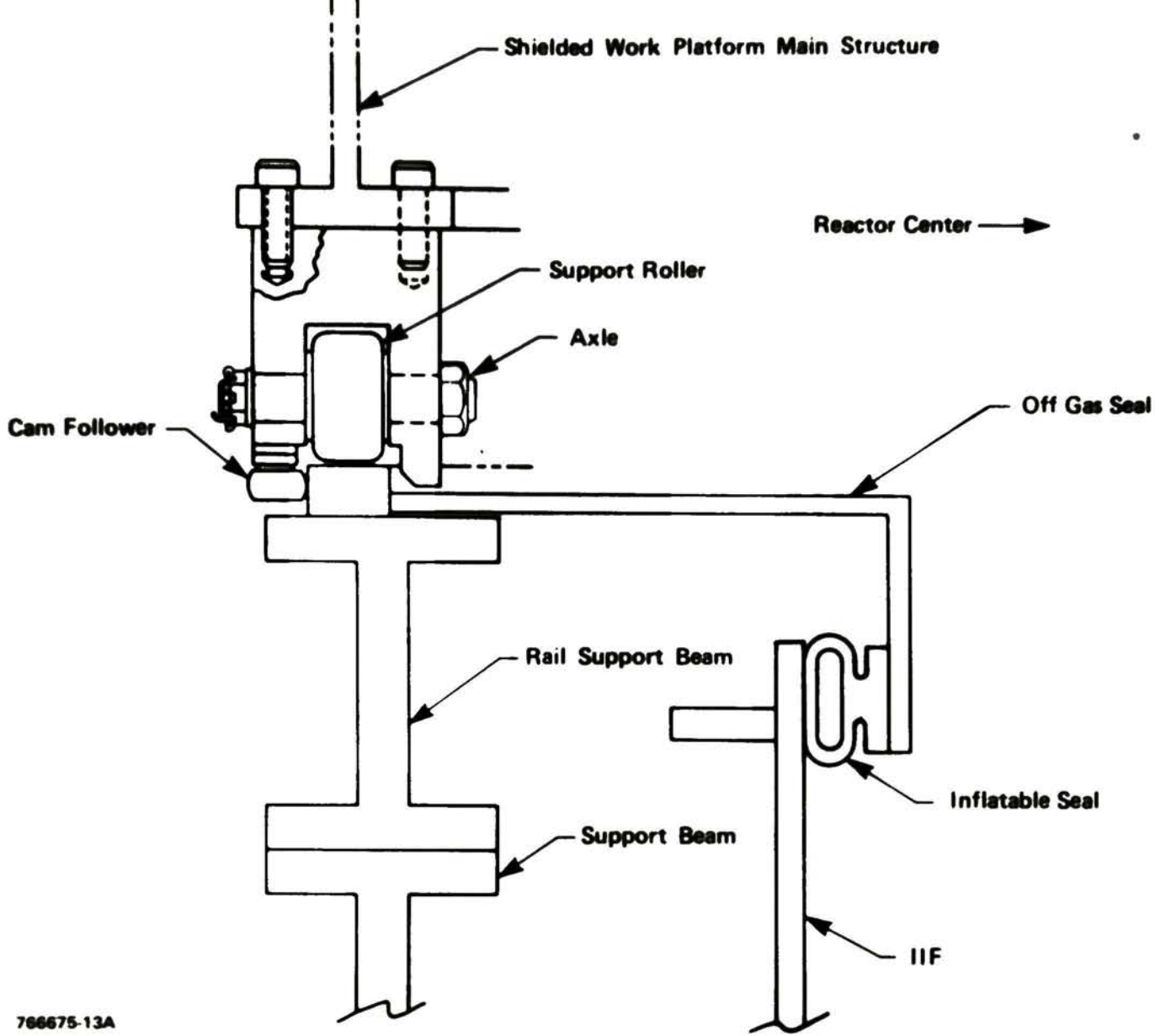

Figure 13. Off-gas seal cross-section.

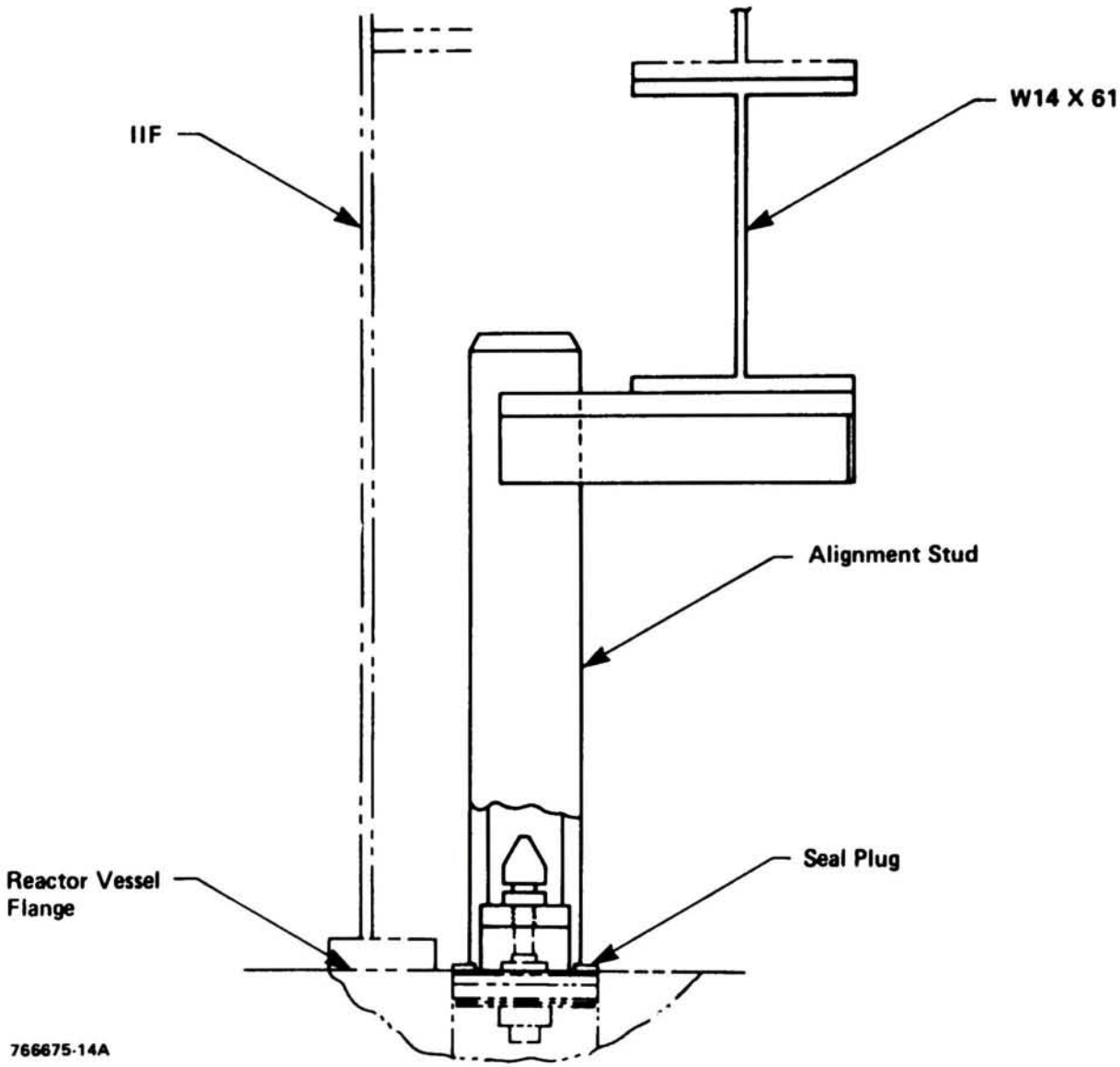

Figure 14. Alignment stud.

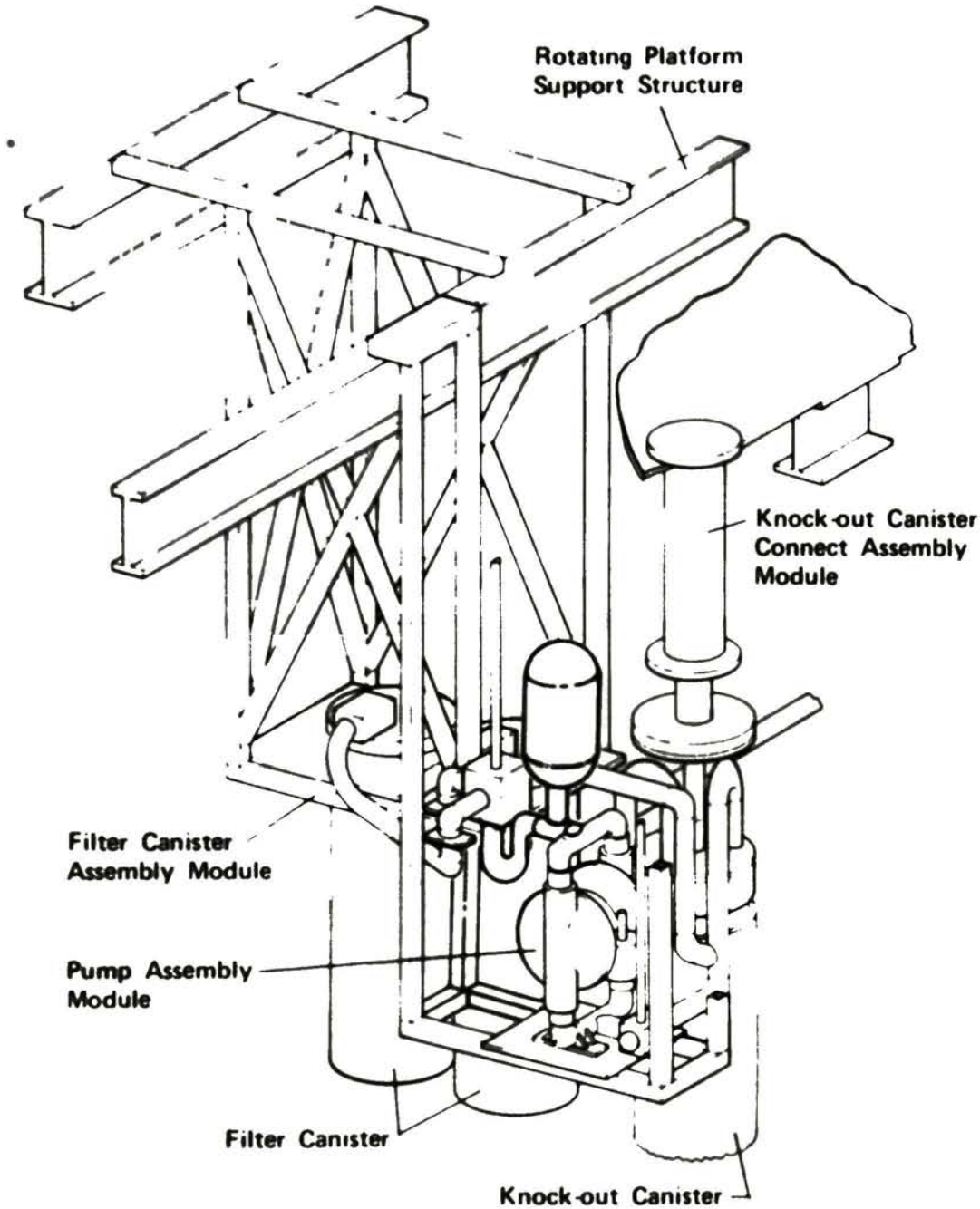

Figure 15. Vacuum system.

canister and coupling/weighing mechanism, the pump module, filter canisters, and the required flexible and stainless steel piping to join the various components into a system. The Vacuum System component modules are positioned beneath and supported by the Shielded Work Platform. Controls for the Vacuum System are located on top of the Shielded Work Platform and monitor or control the vacuuming operation(s). Valve actuators for changing operating modes of the vacuum system are also located at the platform elevation.

The vacuuming operation consists of presenting the nozzle to the debris bed, whereby debris is vacuumed up through the nozzle assembly and delivered to the knockout canister where debris larger than 130 microns is trapped. Debris smaller than 130 microns passes through the knockout canister and is delivered to the filter canister where debris as small as 0.5 microns is trapped. The effluent from the filter canister is discharged into the reactor vessel.

Long handled tools are used to install, actuate, maintain, or service the vacuum system's components and modules. These tools are the Manually Operated Grapple (shown in Figure 16), the Disconnect Tool (shown in Figure 17), and the Hose Handling Tool (shown in Figure 18).

TABLE 3. WBS 412 VACUUM SYSTEM TOOL LIST

Tool/Component	Drawing Number
Nozzle Assembly Module	1734E56
Pump Assembly Module	1735E21
Knockout Canister Connect Assembly Module	1734E56
Knockout Canister Internals	1735E36
Filter Canister Assembly Module	1734E56
Support Tooling:	
Manually Operated Grapple Tool	1735E11
Hose Handling Tool	1735E06
Disconnect Tool	1735E31

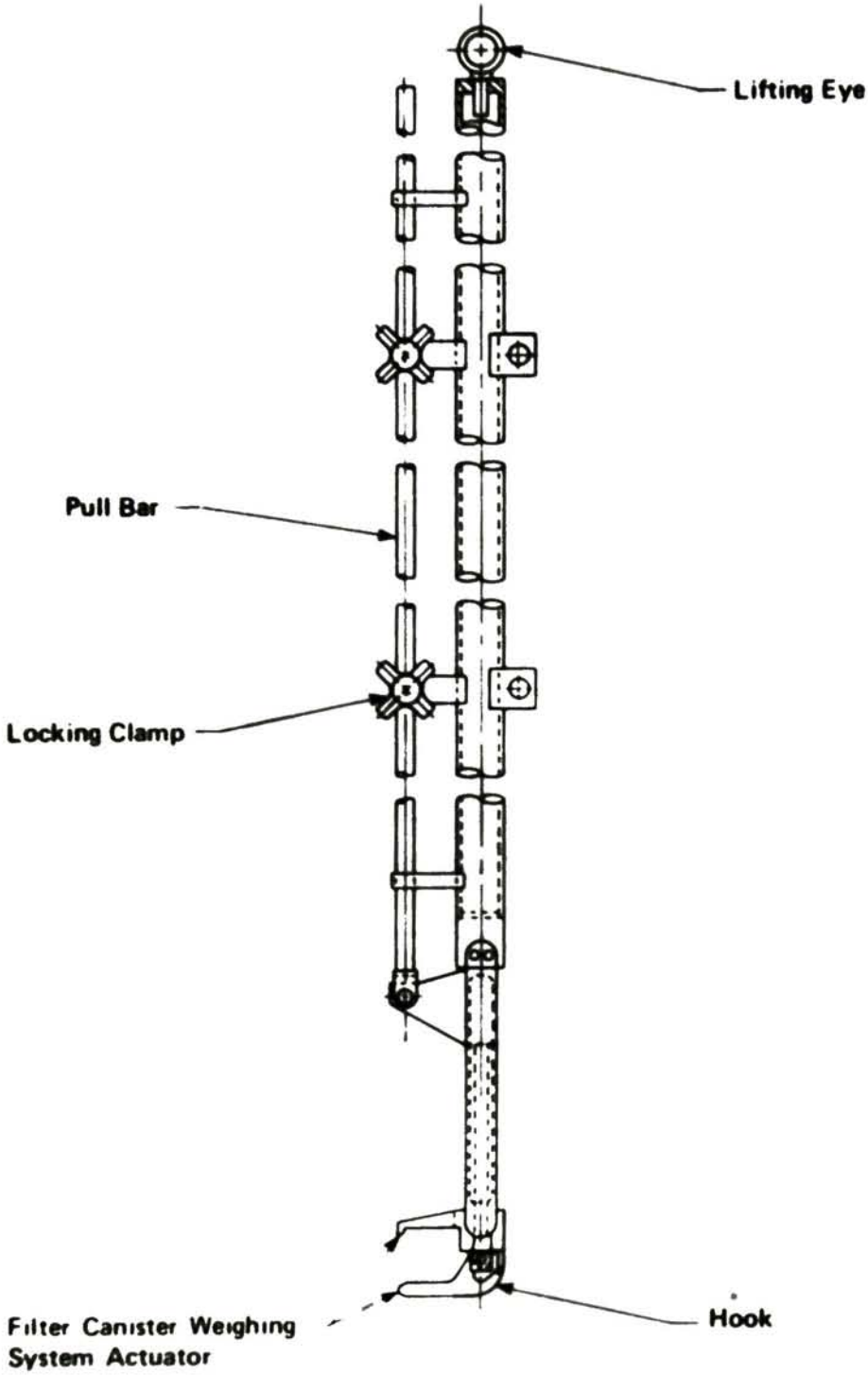

766676 2AB

Figure 16. Manually operated grapple tool.

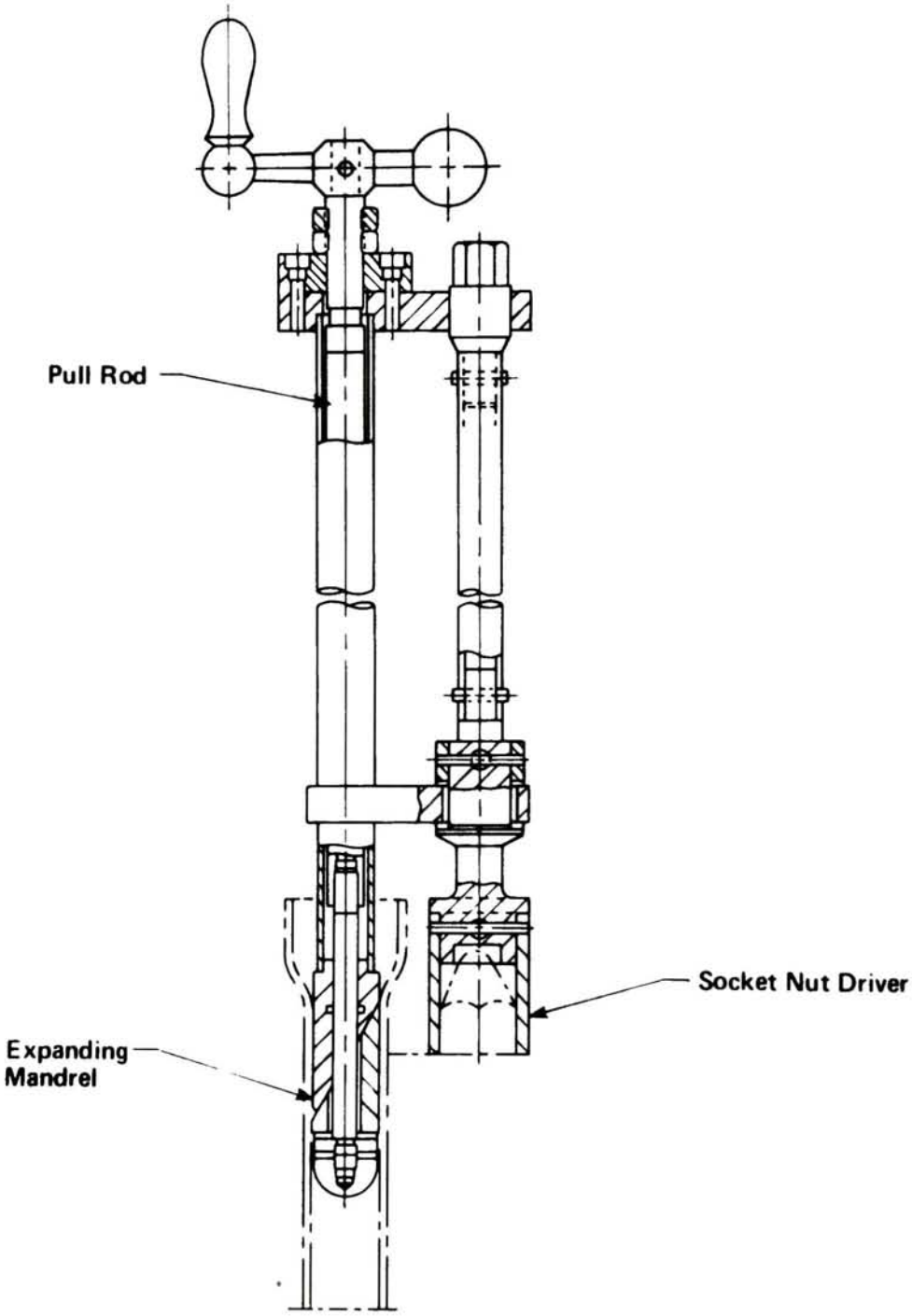

766676-4AA

Figure 17. Disconnect tool.

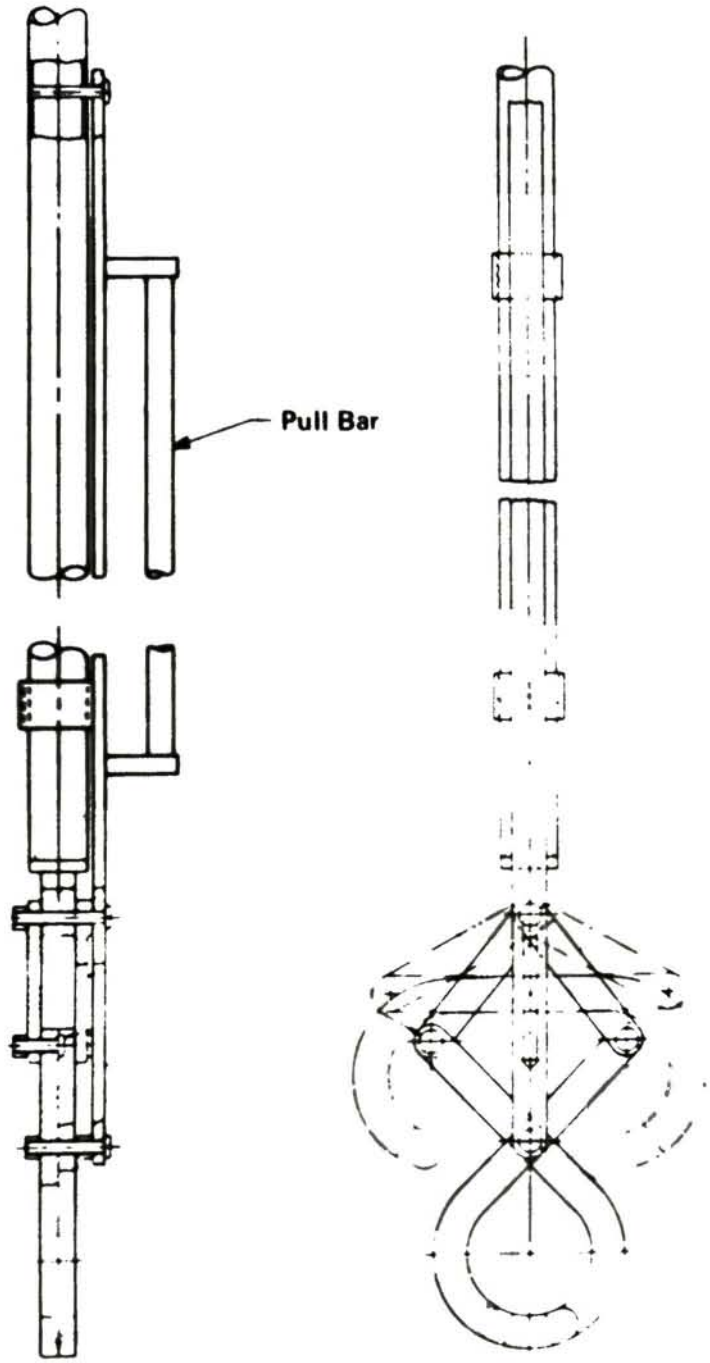

766676 3AA

Figure 18. Hose handling tool.

Long Handled Tools

The Final Design Report for the Long Handled Tools is found in Reference 10. A summary tool list is included in Table 4. The long handled tools will be used for limited pick and place operations and minor cutting of debris. The operator will use the tools through the tool slot in the Shielded Work Platform. The tools will be supported by an overhead crane that also provides vertical and lateral motion. The working portion (end effector) of each tool may be stored in a tool rack located under the Shielded Work Platform or in a rack out of the vessel. A common handling section will couple remotely to each end effector to form the completed tool.

All end effectors will be attached to the End Effector Handling Tool using remote bolts and hydraulic quick disconnects. The quick disconnects are commercially available in Type 304 Stainless Steel, and are modified by removing the self-locking ring portion. The connection is made when the swing bolts are tightened to the mast flange. Locating pins are used to ensure that the hydraulic connections are aligned prior to connection.

Heavy Duty Tools

End Effector Handling Tool. A long handled pole or End Effector Handling Tool illustrated in Figure 19 is used to position and operate the various end effectors from the Shielded Work Platform. The high pressure lines used to actuate the end effectors run inside the pole to protect them from damage. The pole is designed for a 2,000 lb tension load and a 135 lb lateral load.

The pole is segmented into two 15 ft sections and one 7 ft section so that it may be used in either a 30 or 37 ft length. The 30 ft length will be used to work on the upper half of the core and the 37 ft length will be used on the lower half. The pole sections are attached to each other using remotely connected bolts and quick disconnect hydraulic fittings with the self-locking ring portions removed. Locating pins are used to ensure that

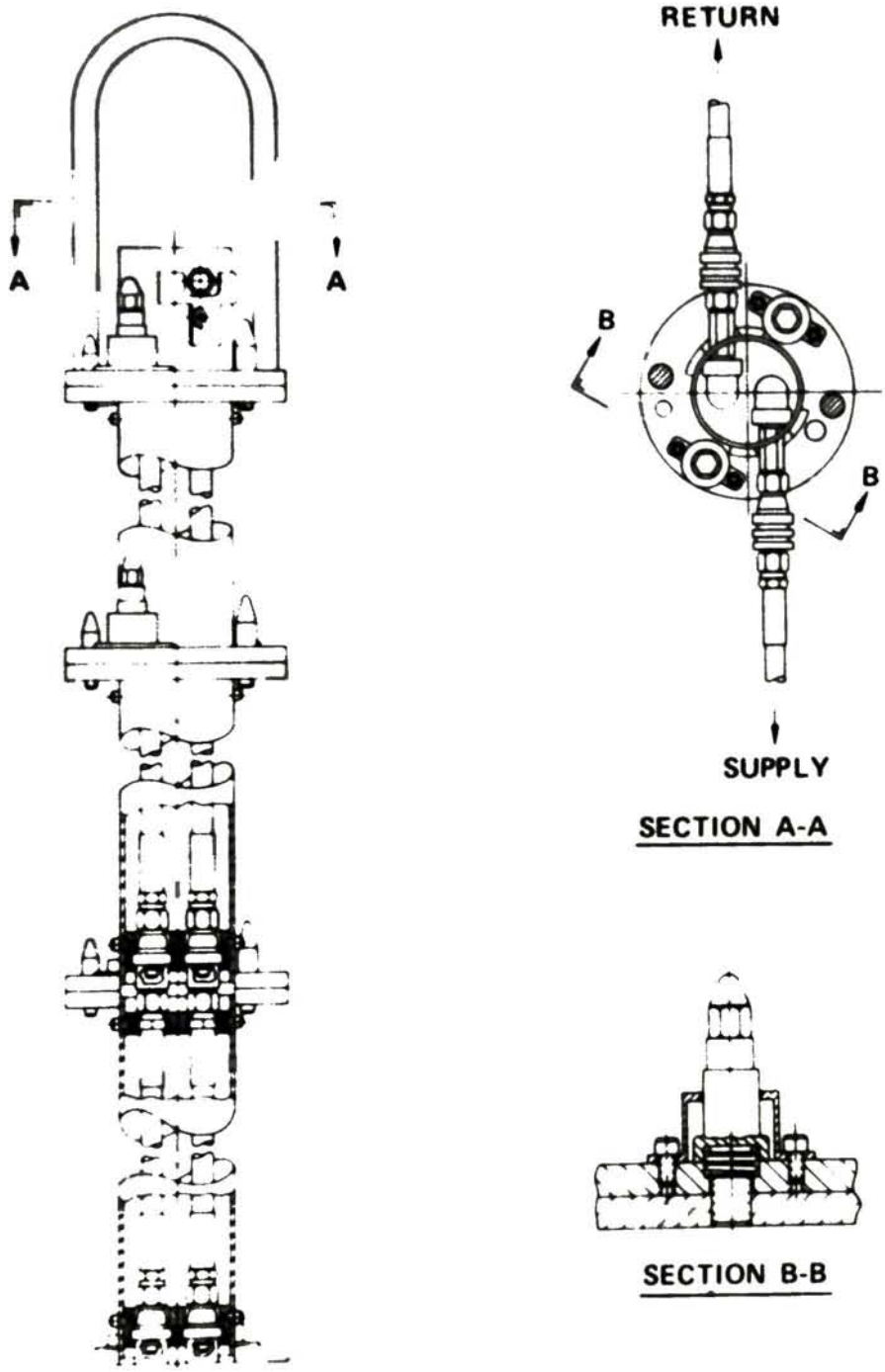

766673 18

Figure 19. End effector handling tool.

the hydraulic fittings are aligned prior to connection. The pole sections will have holes drilled in them to reduce buoyancy problems. The total weight of the long handled pole with an end effector attached is approximately 270 lb.

Three Point Gripper. The Three Point Gripper illustrated in Figure 20 will pick up small objects from the debris pile for transfer to a fuel canister. Maximum object size is 5 in. and expected payload is 20 lb.

Four Point Gripper (Staple Puller). The Four Point Gripper (staple puller) illustrated in Figure 21 will pick up single, regularly or irregularly-shaped, objects from the debris pile for transfer to a fuel canister. More than one size will be built with various width jaws for various sized objects. The tool will be effective for handling 1/4-to 3-1/2-in.-diameter objects.

Grapple. A Grapple illustrated in Figure 22 will be used to lift irregular pieces, especially end fittings and spiders.

Single Rod Shears (Horizontal and Vertical). The Single Rod Shears illustrated in Figure 23 will be a scissor-type tool made from AISI S1 tool steel capable of cutting one to two fuel rods at one time. The stationary blade can be wedged between the fuel rods in an assembly. The moving blade is hooked to keep it from slipping away from the assembly. It is powered by a double-acting cylinder and can produce a 5,000 lb shear force at 1500 psi hydraulic pressure. By removing two pins, the blades can be easily removed and replaced. Left and right handed shear blades will be available. The shears incorporate design parameters based on results from the shear proof of principle tests.

Parting Wedge. The hydraulic Parting Wedge illustrated in Figure 24 is used to separate and fracture material. At 2000 psi hydraulic pressure, it can apply a force of 500 lb at the end of its arms. This capacity will be verified by testing. It consists of a single-acting hydraulic cylinder and two 8-in.-long spreading arms. The arms can spread open to 7-1/4 in.

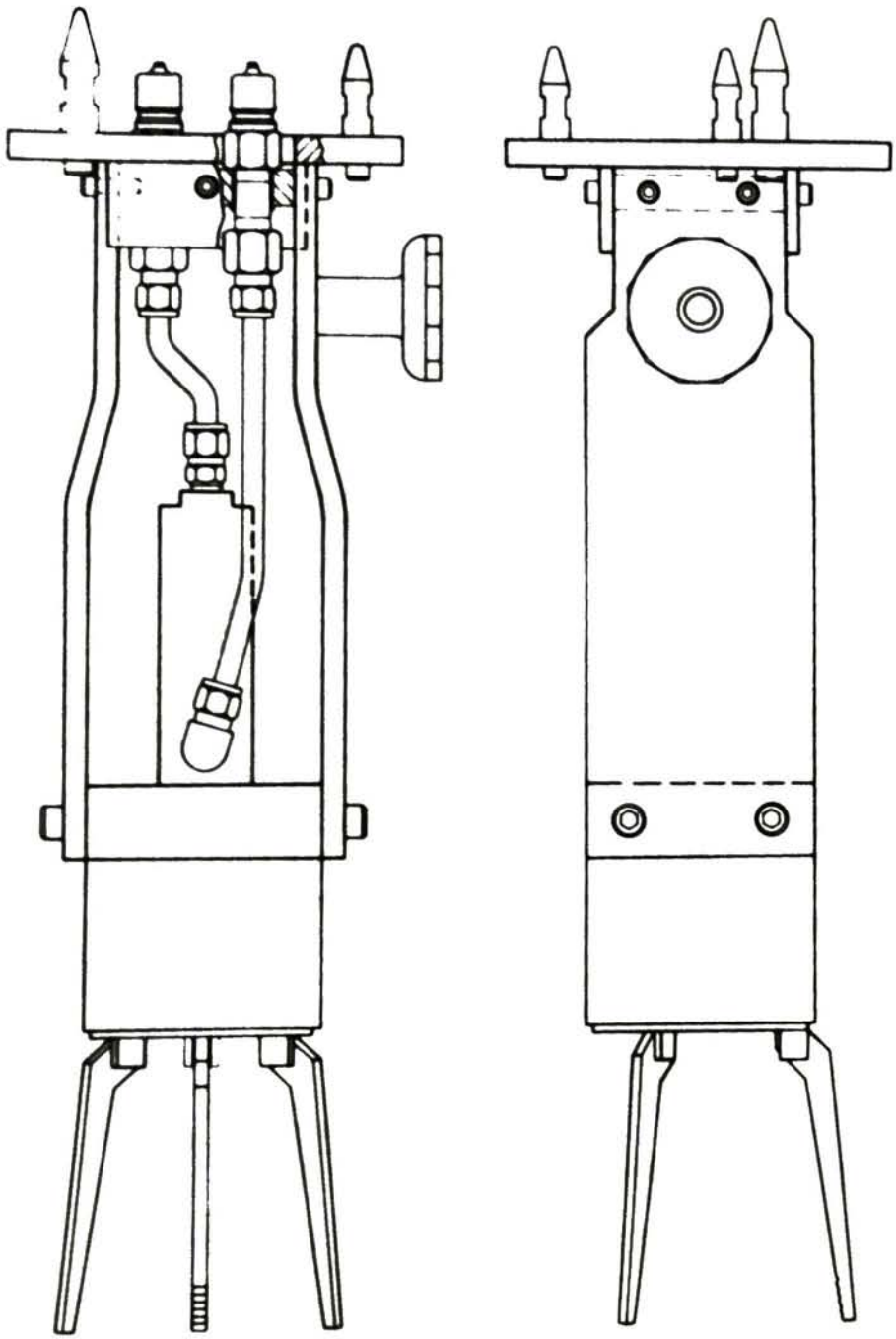

766673 5B

Figure 20. Three point gripper.

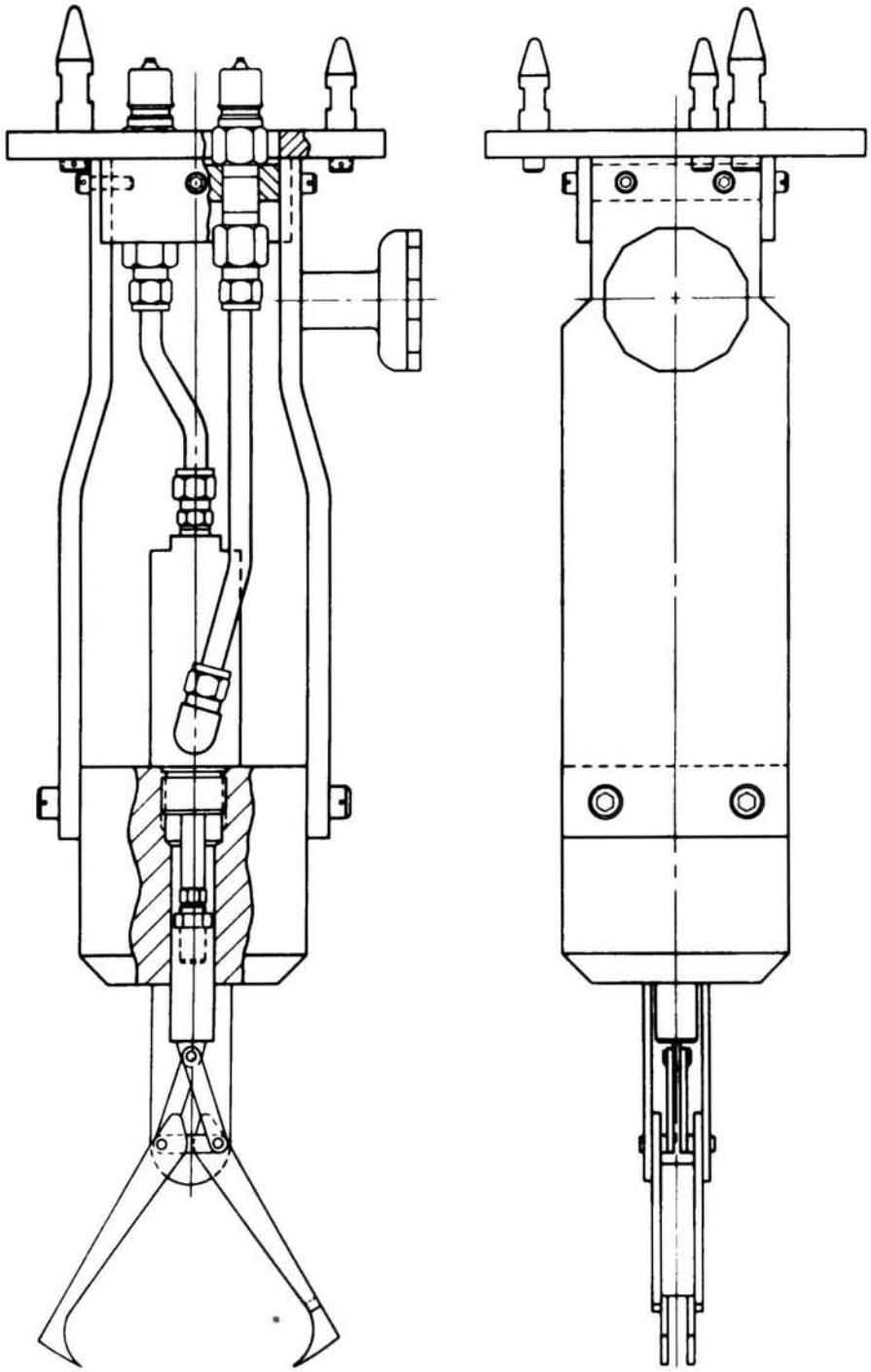

766673-6B

Figure 21. Four point gripper.

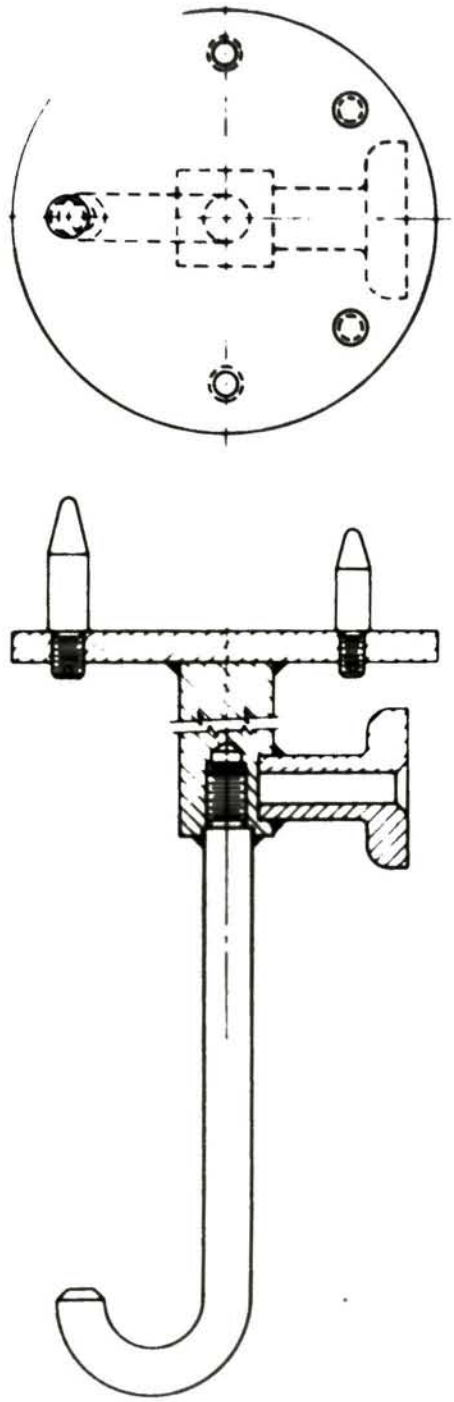

766673 7B

Figure 22. Grapple.

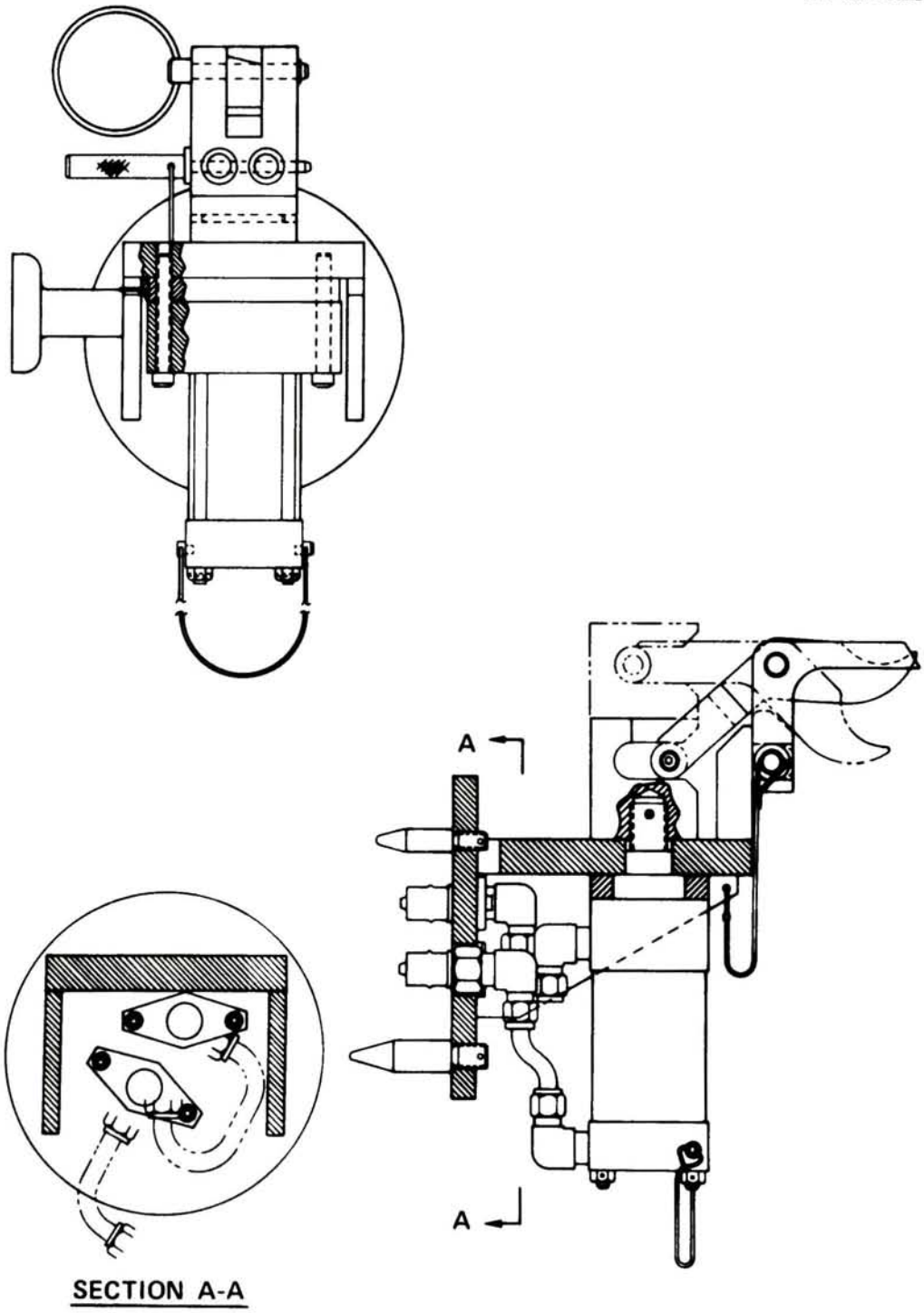

Figure 23. Single rod shears.

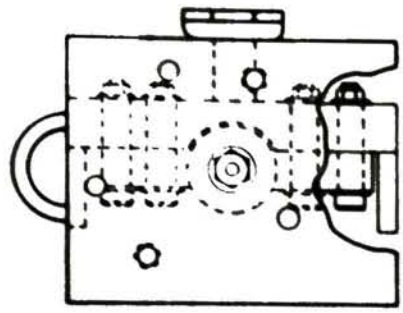

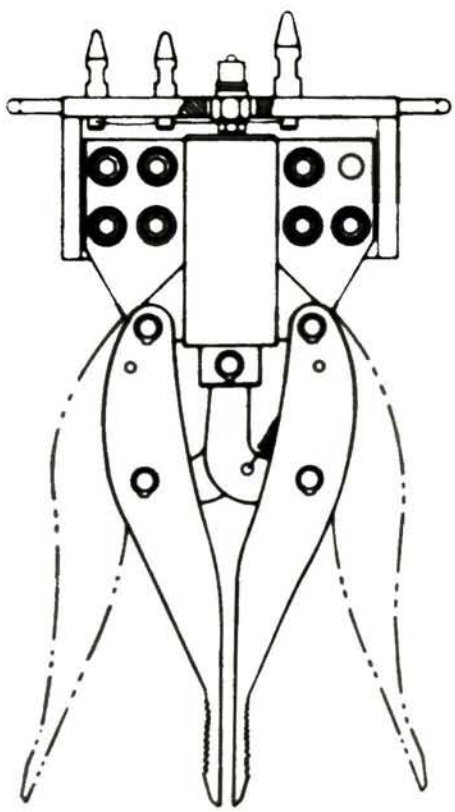

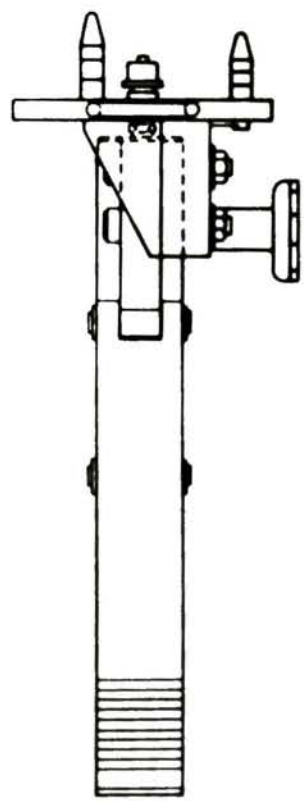

766673 4B

Figure 24. Parting wedge.

When closed, the wedge can fit inside a 1-1/4 in. x 2 in. hole. This is a commercially available item which is modified to increase spreading force by reducing the arm length from 14-5/8 to 11-5/8 in.

Lightweight Tools

The lightweight tools will be mounted on aluminum conduit coupled together in sections. These tools can be manually operated with or without using the crane. They have been found to be very useful in unstructured underwater operations.

Vise Grips. Several configurations and types of remotely operated Vise Grips illustrated in Figure 25 will be used for various operations. All use a double-acting cylinder. Vertically and horizontally oriented vise grips with standard, needle nose, and tube gripper ends are among the options being considered.

Bolt Cutters. The Bolt Cutters illustrated in Figure 26 will be used for various light duty cutting operations. Interchangeable cutting heads are available. These tools will be capable of cutting horizontally and vertically. The cutting force is expected to be in the 1500 to 1800 lb range.

Hook Tools. Various size Hook Tools illustrated in Figure 27 will be used to lift and move debris, hoses, and cables. Capacity is 50 lb.

Socket Wrench. The Socket Wrench illustrated in Figure 28 is a long handled tool used to connect and disconnect end effectors and End Effector Handling Tool pole sections.

Long Handled Tool Support Equipment

The support equipment for Long Handled Tools has not been included in any preliminary or final design packages. This equipment has been discussed informally with GPU Nuclear personnel and are included in the

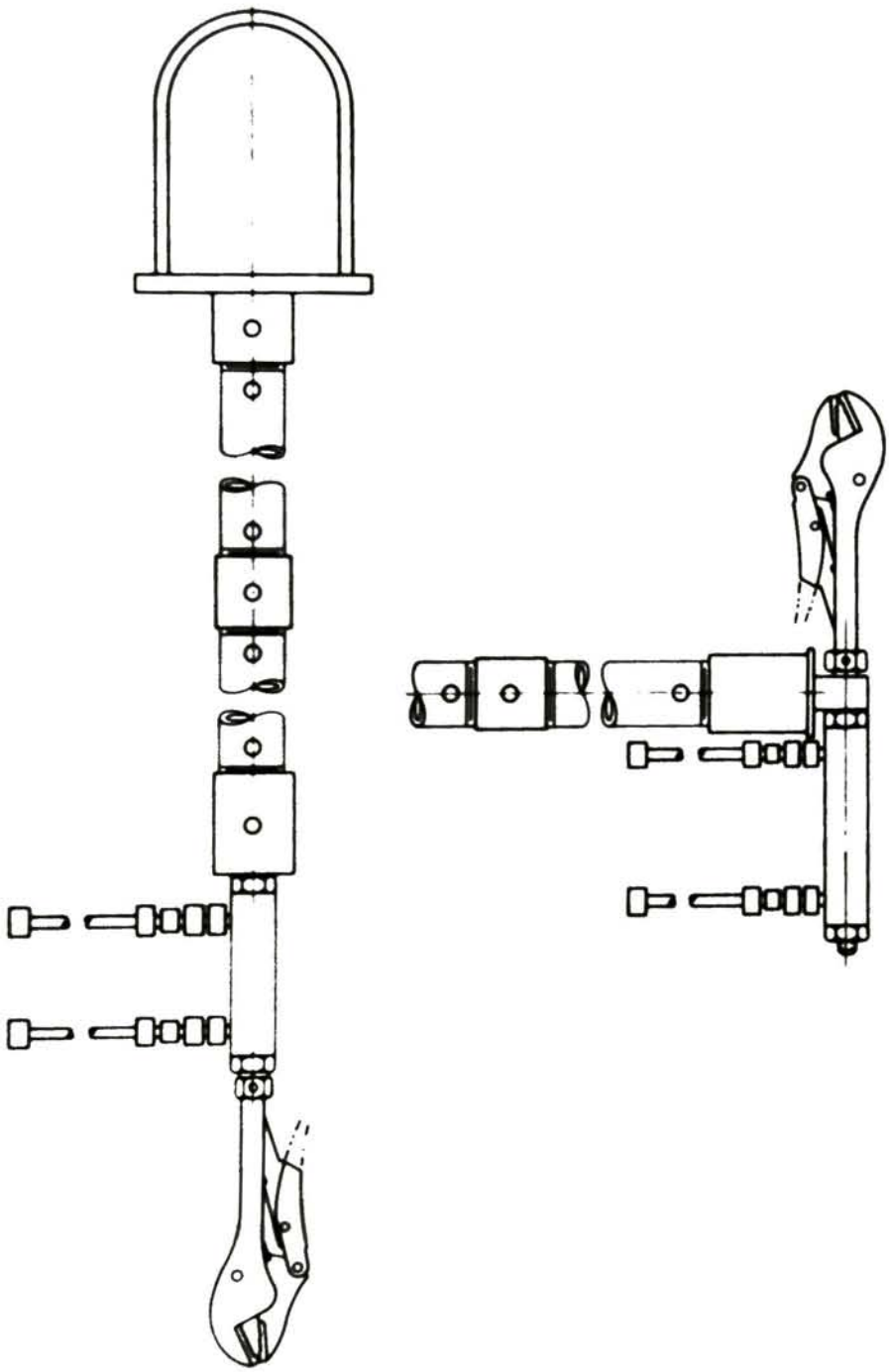

Figure 25. Vise grips.

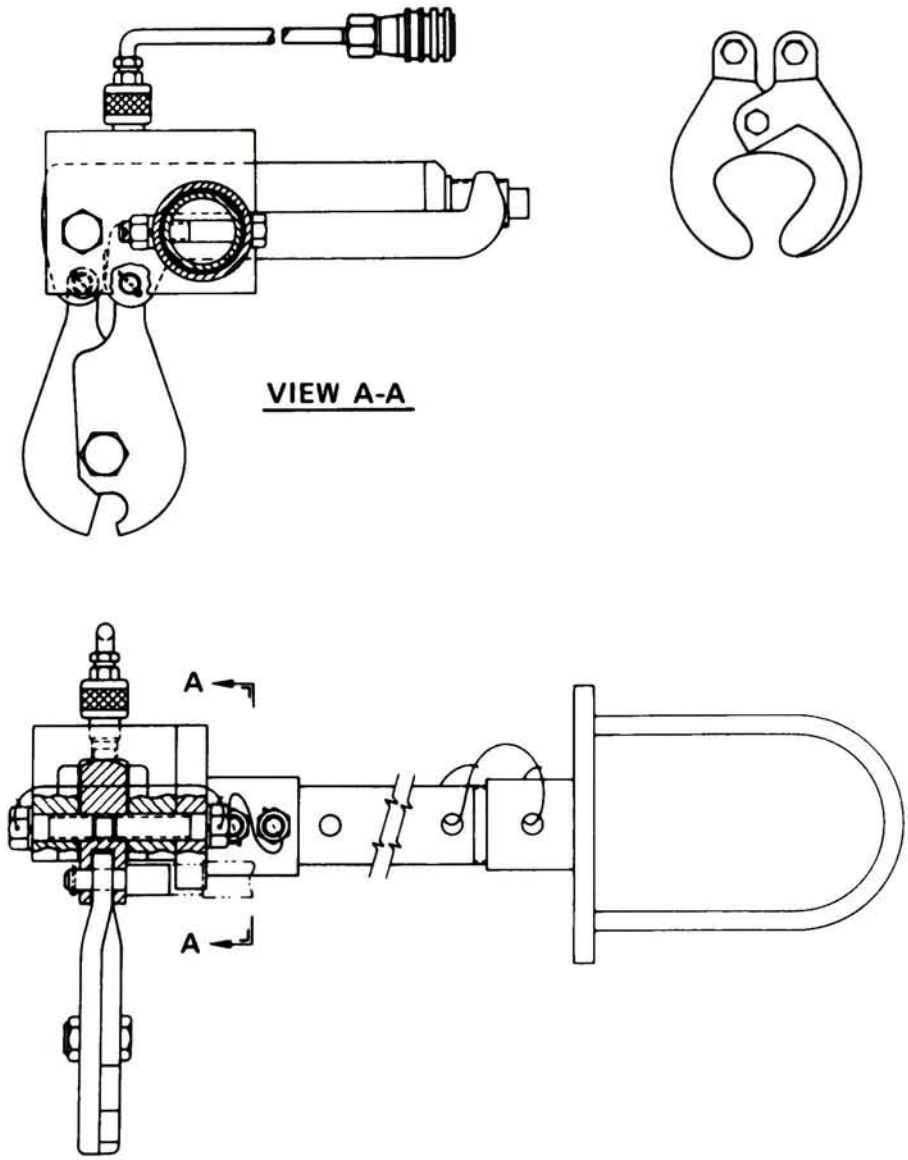

766673-12B

Figure 26. Bolt cutters.

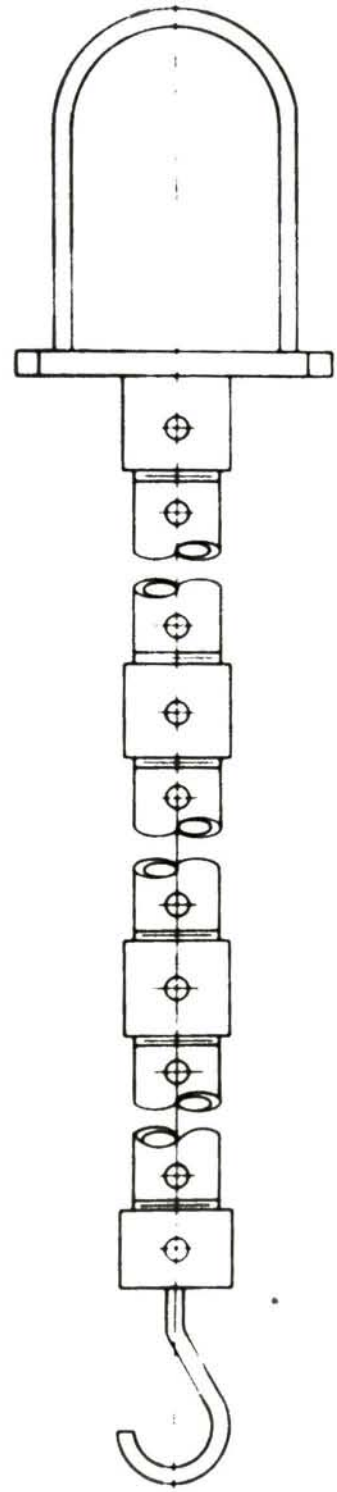

766673 108

Figure 27. Hook tools.

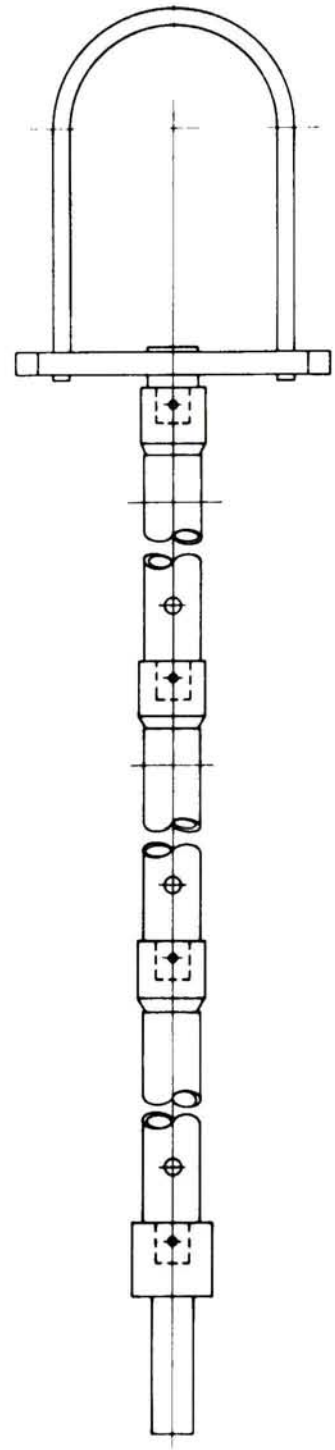

766673-9B

Figure 28. Socket wrench.

Task Description Document[6]. The exact tool list will be determined after resolution of the Task Description document.

Disposable Debris Buckets. Two types of disposable debris buckets (Figure 29) will be provided: The Top Loading Debris Bucket and Side Loading Debris Bucket. The purpose of the debris buckets are to configure the debris before it is inserted into the fuel canister, to maximize the packing density in a canister, and to eliminate many 10-ft vertical trips to load small pieces of debris. Both types are constructed of 300 series stainless steel sheet metal and are designed to fit into the fuel canisters. The top loading disposable debris bucket is loaded in the vertical position and has a hinged lid on top which latches closed to prevent accidental spillage. Lifting lugs are mounted on the sides for stacking inside the fuel canister.

The disposable Side Loading Debris Bucket is loaded in the horizontal position and has a hinged lid on the side which latches closed to prevent accidental spillage. A lifting bail is mounted on the bucket and may be recessed in the top for stacking inside the fuel canister.

Reusable Debris Bucket. The Reusable Debris Bucket illustrated in Figure 30 is a sheet metal container designed to transport debris and deposit it into the fuel canister. It has a remotely operated trap door on the bottom for unloading into the fuel canister. The reusable debris bucket will fit into the fuel canisters.

Debris Bucket Funnel. The Debris Bucket Funnel illustrated in Figure 30 is a 300 Series Stainless Steel sheet metal funnel which fits into the debris buckets. Its function is to aid in directing the debris into the debris buckets.

End Fitting Wire Storage Basket. The End Fitting Wire Storage Backet illustrated in Figure 30 is used to hold end fittings which may not fit into the fuel canister. The capacity is 42 end fittings which corresponds to a weight capacity of 1000 lb. It may be mounted on the baffle plates or be set on the debris bed.

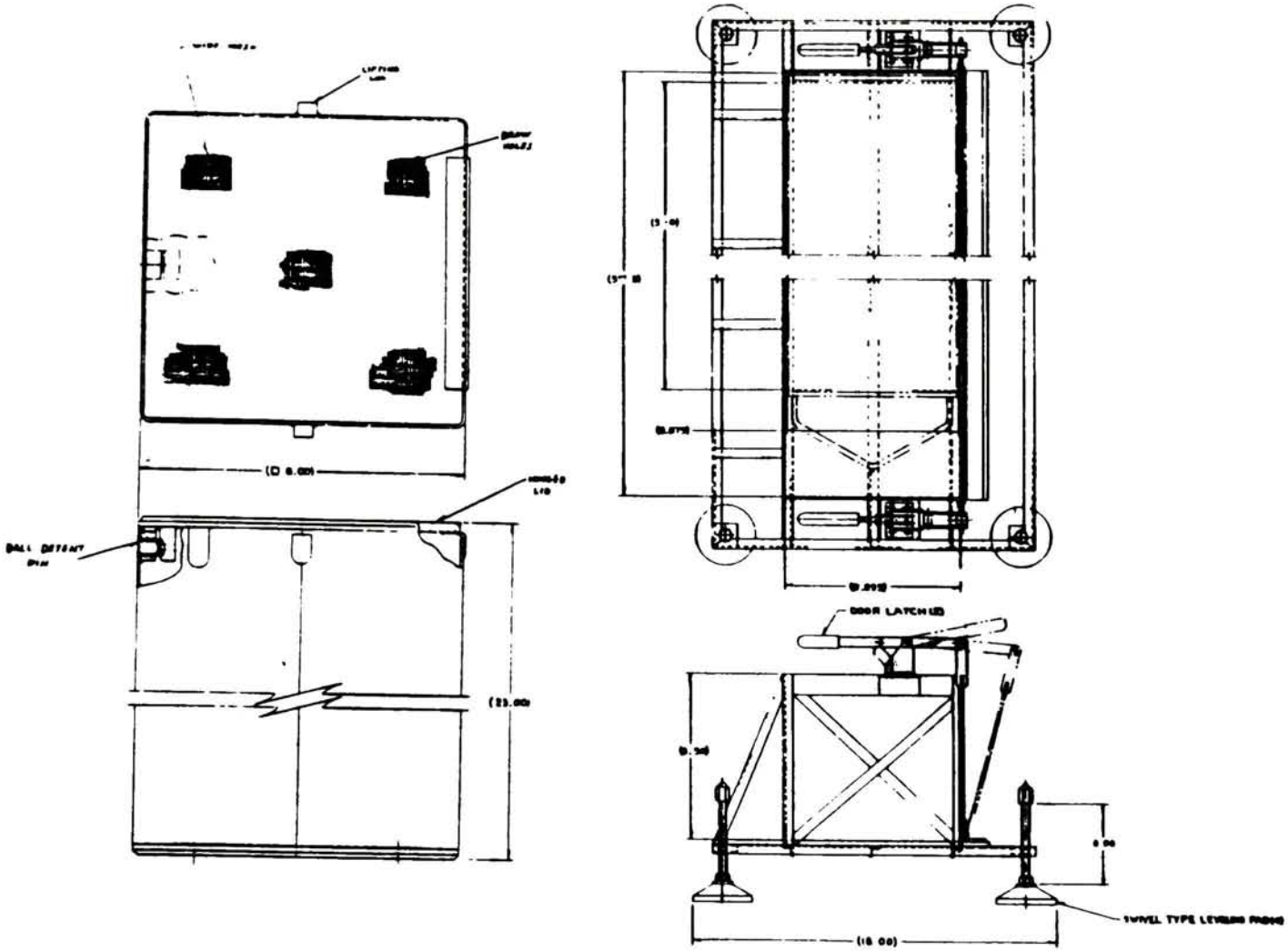

Top Loading Debris Bucket

Strongback for
Side Loading
Debris Bucket

Figure 29. Disposable debris bucket.

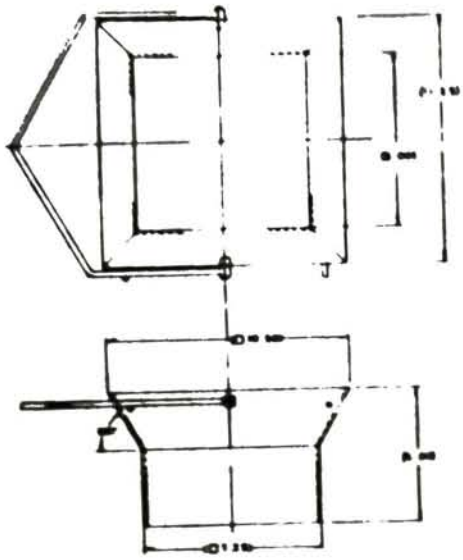

Debris Bucket Funnel

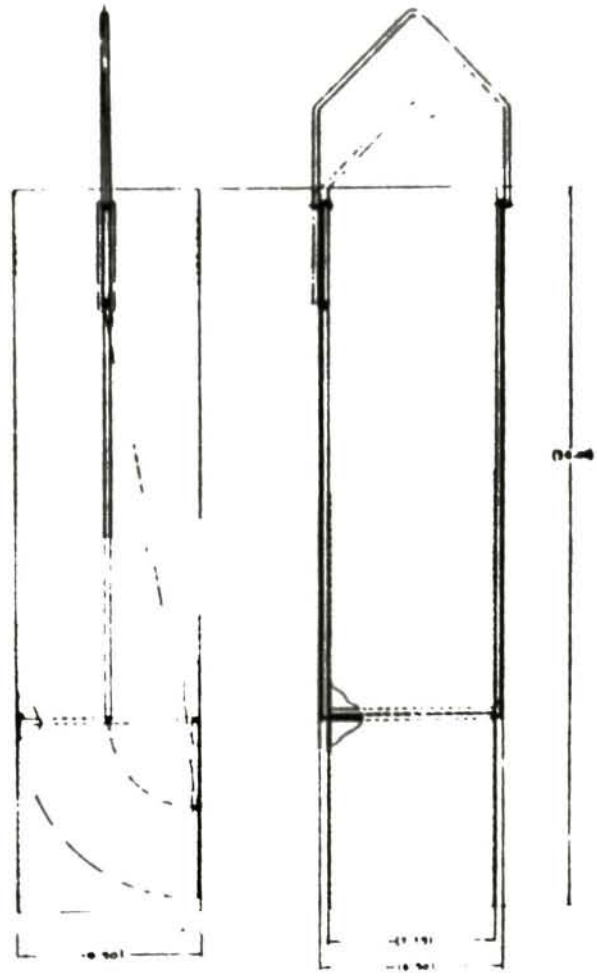

Reusable Debris Bucket

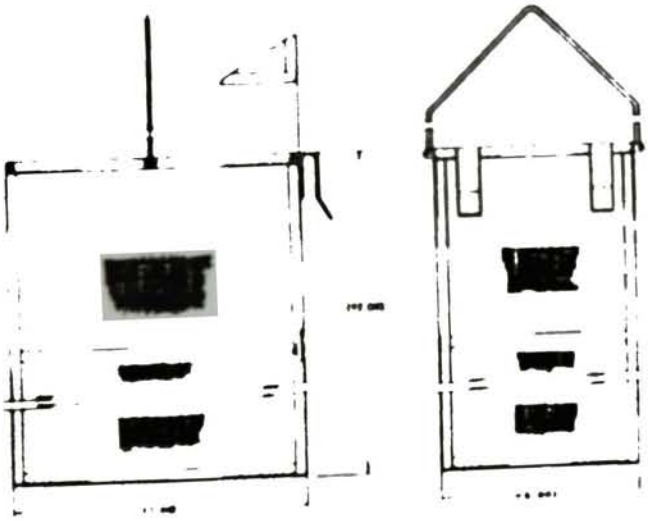

End Fitting Wire Storage Basket

Figure 30. Reusable debris bucket, debris bucket funnel, and end fitting wire storage basket.

Debris Bucket Handling Tool. The Debris Bucket Handling Tool illustrated in Figure 31 is used to move the top and side loading disposable debris buckets by hooking onto the lifting lugs.

Debris Bucket Stands. The Debris Bucket Stands illustrated in Figure 32 are used to hold the debris buckets while they are being filled. They will be equipped with remotely adjustable leveling feet so that they may be placed near the work area. Stands will be provided for top loading and side loading debris buckets. The side loading debris bucket stand will have a hinged side which may be latched open and closed. This will allow the debris bucket to be held firmly while it is being loaded and will allow the bucket to be easily removed when full.

TABLE 4. WBS 514 LONG HANDLED TOOLS LIST

Tool/Component	Drawing Number
End Effector Handling Tool	1773E26
Three Point Gripper	1773E45
Four Point Gripper	1773E49
Grapple	1773E09
Single Rod Shears	1775E59 & 1774E53
Parting Wedge	1773E28
Vise Grips	1773E36
Bolt Cutters	1770E41
Hook Tools	1773E39
Socket Wrench	1773E39
Disposable Debris Buckets	
Reusable Debris Bucket	
Debris Bucket Funnel	
End Fitting Wire Storage Basket	
Debris Bucket Handling Tool	
Debris Bucket Stands	

Control System

The Final Design Report for the Control System is found in Reference 11. A summary tool list is included in Table 5. The Control

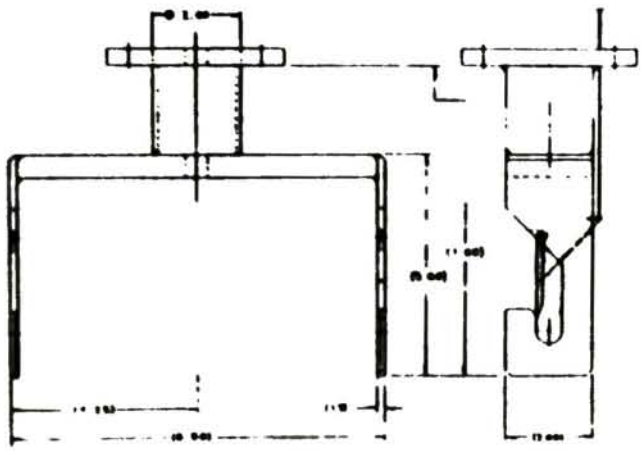

Figure 31. Debris bucket handling tool.

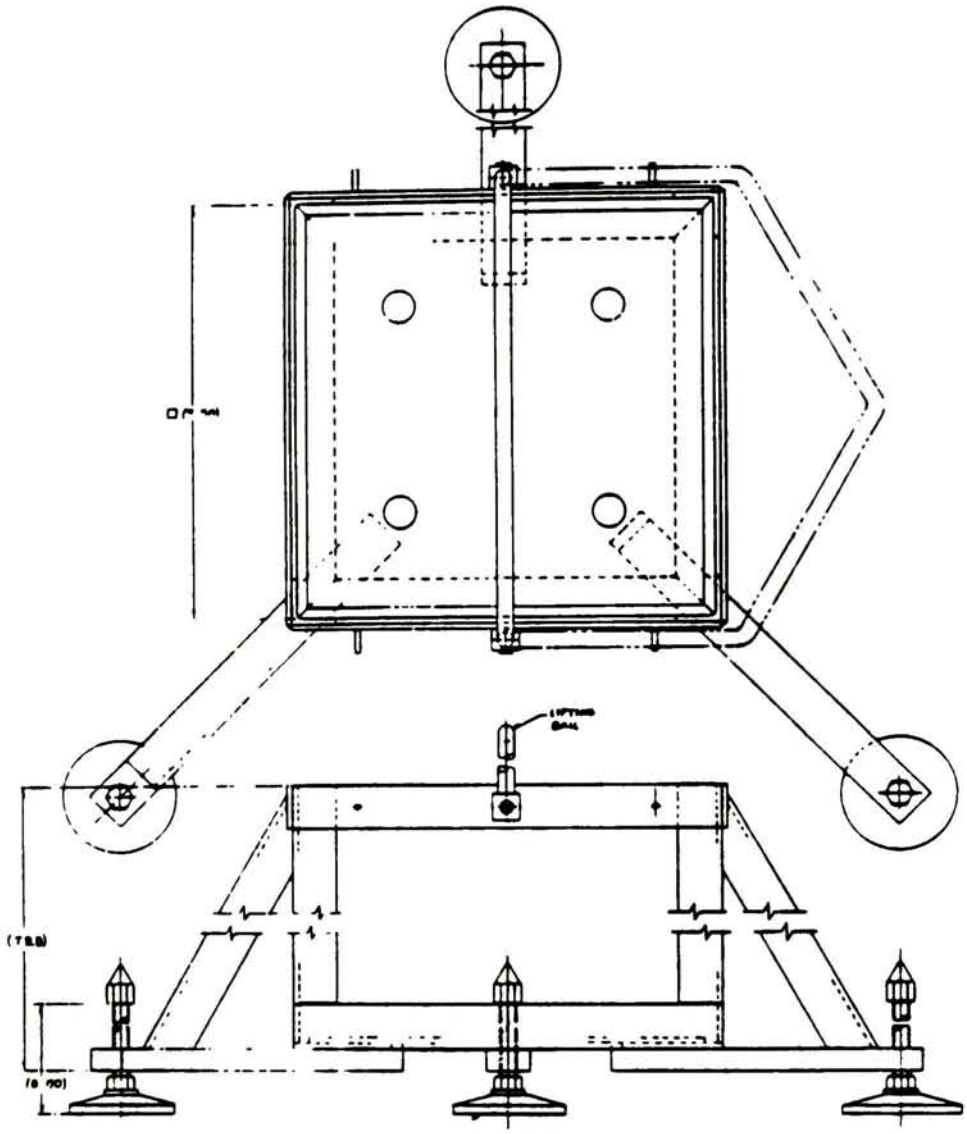

Figure 32. Debris bucket stand.

System consists of the electrical, hydraulic, and air distribution systems for the defueling equipment. The Control System is made up of the following:

- Electrical Power and Control Equipment
- Hydraulic Power and Control Equipment
- Air Supply and Control Equipment
- Viewing System
- Cable Management System

The control system supports all defueling phases.

TABLE 5. WBS 561, 564 CONTROL SYSTEM TOOL LIST

Tool/Component	Drawing Number
Control System	1738E48
Control Console	1738E41
Cable Management	1739E85

The P&ID General Arrangement drawing for the control system is shown in Figure 33. The figure depicts the flow of electrical, hydraulic, and pneumatic power from the GPU Nuclear site-supplied services. The figure shows schematically all the cable routing to the various tools or instrumentation. The required site supplied services are:

Electrical:	Qty. (2) 480V, 3 , 60A in the Reactor Building
	Qty. (1) 480V, 3 , 100A in the Reactor Building
	Qty. (1) 480V, 3 , 30A outside the Reactor Building
Air:	100 SCFM at 90 psi in the Reactor Building

Electrical Power and Control Equipment

The Electric Power Distribution Center consists of a NEMA Type 12 enclosure and a 30 KVA power transformer. All of the required voltages are

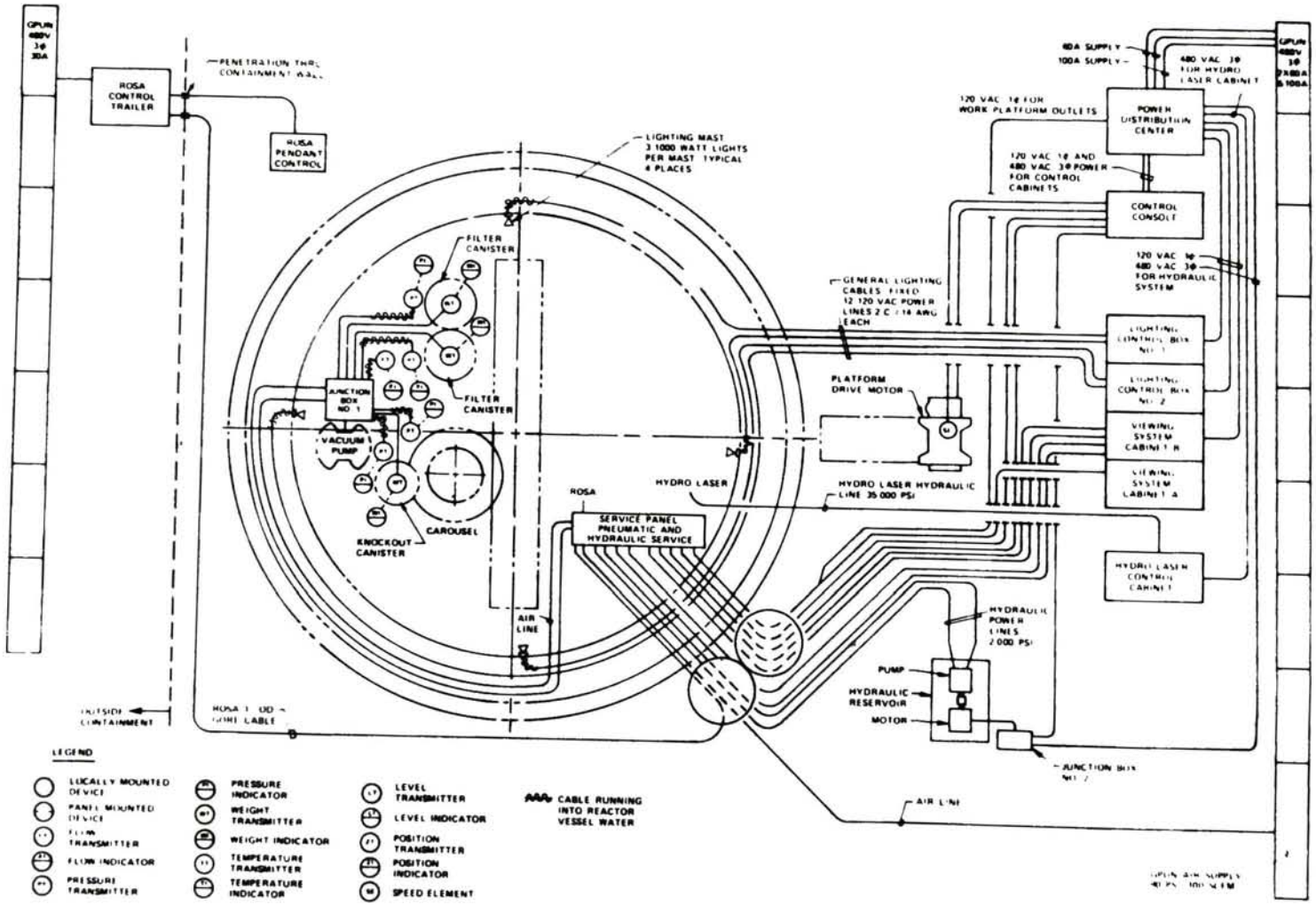

766674-1A

Figure 33. P&ID general arrangement.

derived from three 480V, 3 Phase feeder lines supplied from the GPU Nuclear system. A single line power distribution network is illustrated in Figure 34. Each enclosure in the power distribution center will be grounded by means of a grounding network.

The 30 KVA Transformer shown in Figure 35 steps down 480V, 3 Phase, 60 HZ to 208V. 3 Phase, and 120V, Single Phase. The 120V, Single Phase loads are supplied with ground fault circuit breakers.

The Main Control Console shown in Figure 36 will contain the monitoring and control systems for the Vacuum System and the Shielded Work Platform. A general internal panel arrangement for this console is shown in Figure 36. Electrical power (120 VAC) will be connected to terminal blocks in the cabinet and distributed to individual components if required.

The Vacuum System control hardware illustrated in Figure 37 consists of the process monitors, canister weighing monitors, and the air pressure regulator. They are in a junction box near the Vacuum System and wired to the Main Control Console. An electrically actuated air regulation valve will be installed in the Vacuum System air supply line. Four pressure transmitters monitor the pressure drop across the knockout canister and the two filter canisters, and the backflush pressure. A high pressure (over 40 PSIG) condition in either of the filter canisters will cause an alarm. The alarm will be visual and, if necessary, may also be audio. A flow meter mounted on the suction side of the Vacuum System will cause an alarm for low flow during vacuuming operations. The low flow indicates a clog in the system or a large pressure drop across the filters. The canister weighing system consists of tension load cells mounted in a hanging assembly which supports the canisters. Alarms will be programmed for a high set point to indicate a fully loaded canister. The load cell displays will be segregated from the process displays on the panel for easy recognition.

The Shielded Work Platform drive is a closed loop dc servomotor with a tachometer. It will be controlled in a servomotor loop using the

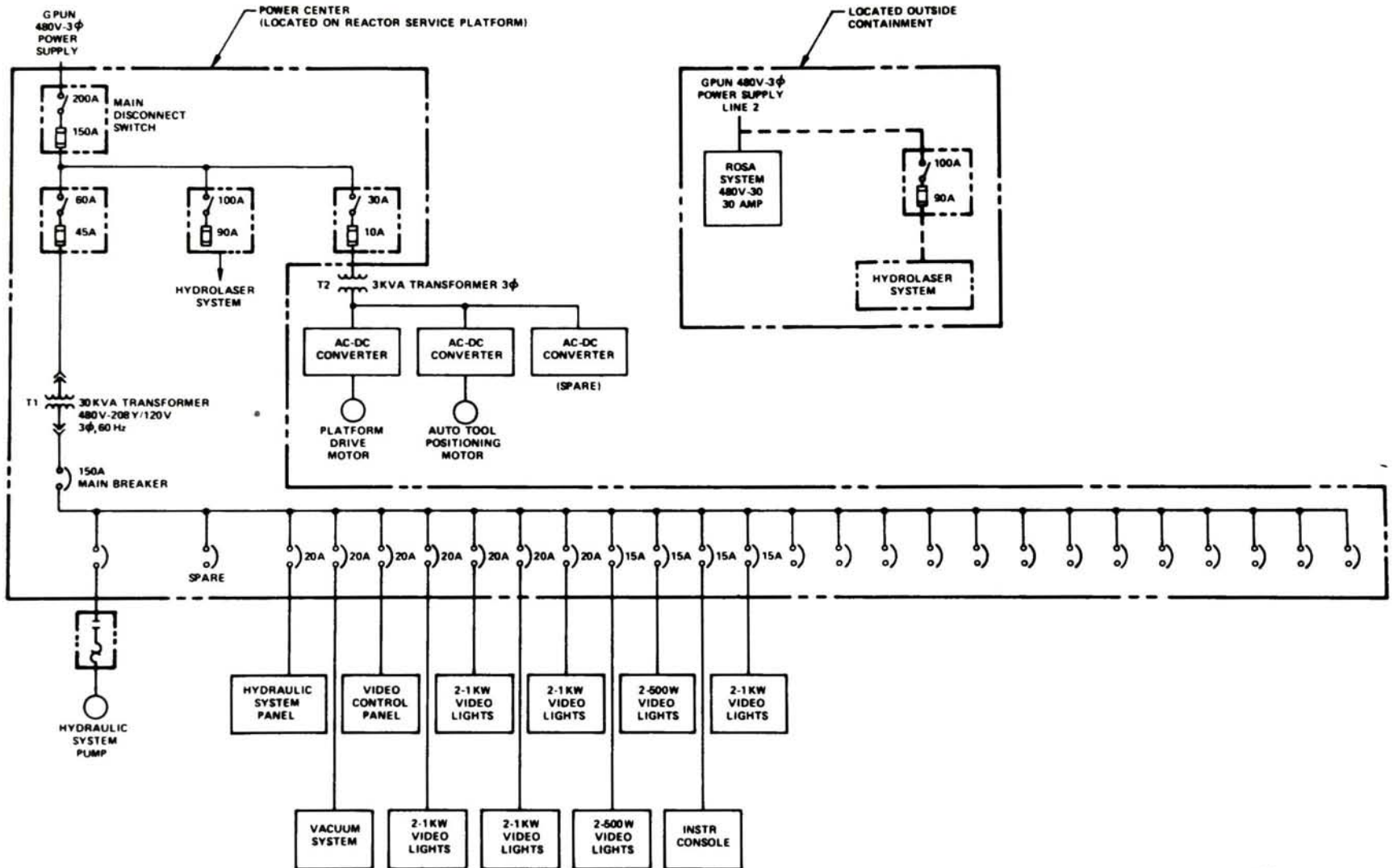

Figure 34. Single line diagram - electrical power distribution.

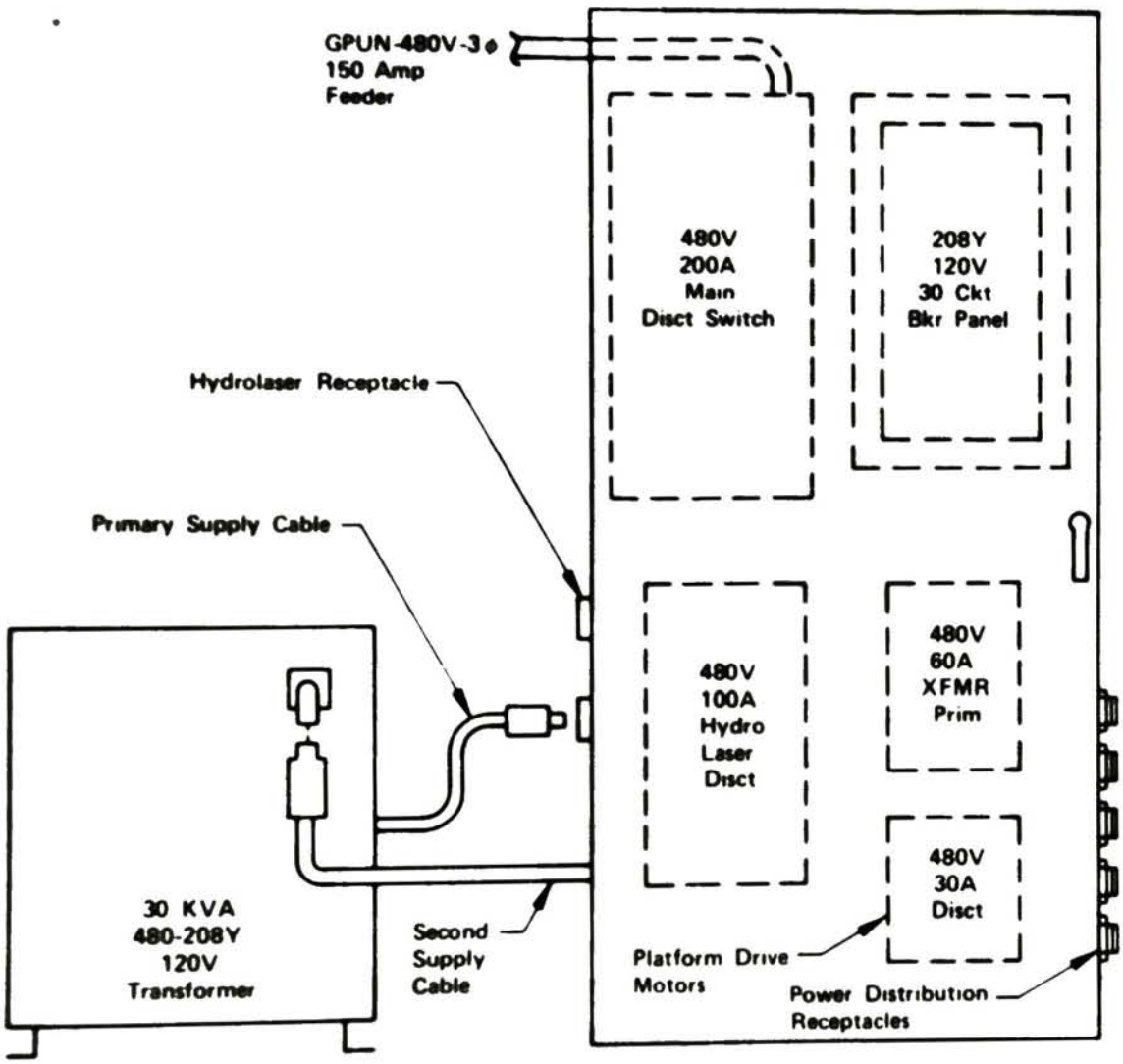

Figure 35. Electrical power distribution.

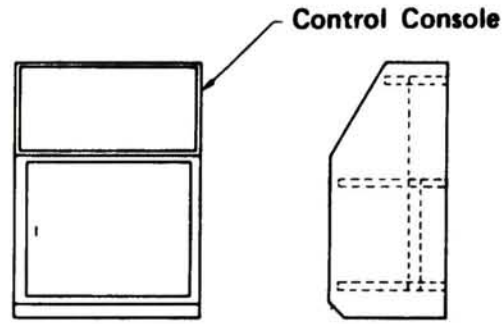

CONTROL CONSOLE

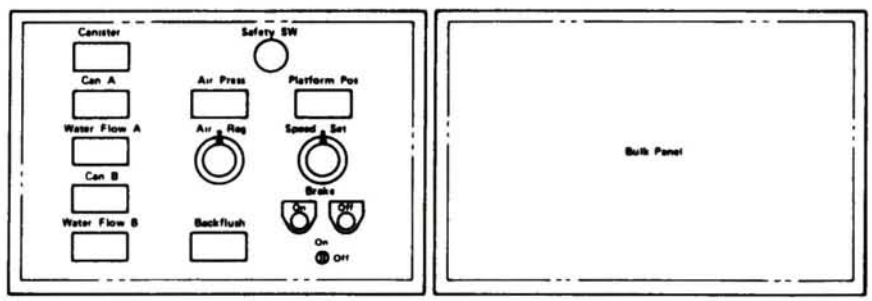

CONTROL CONSOLE PANEL LAYOUT

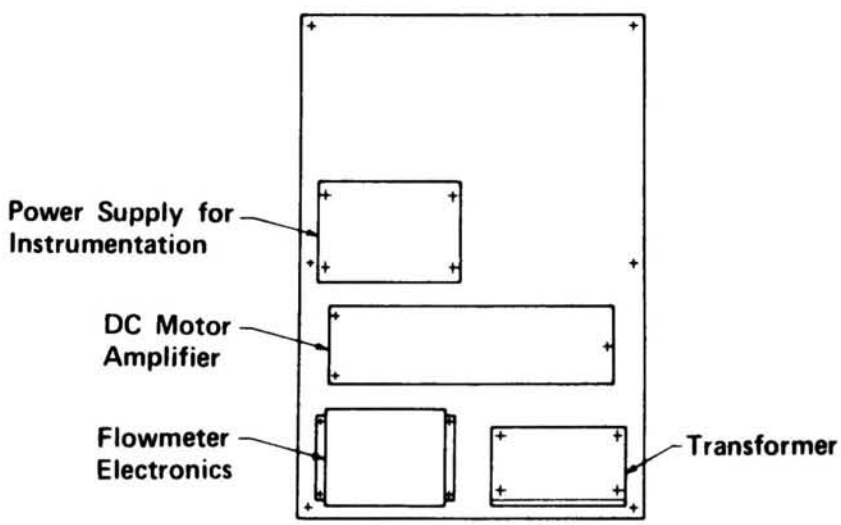

INTERNAL CONTROL PANEL LAYOUT

766674-4A

Figure 36. Main control.

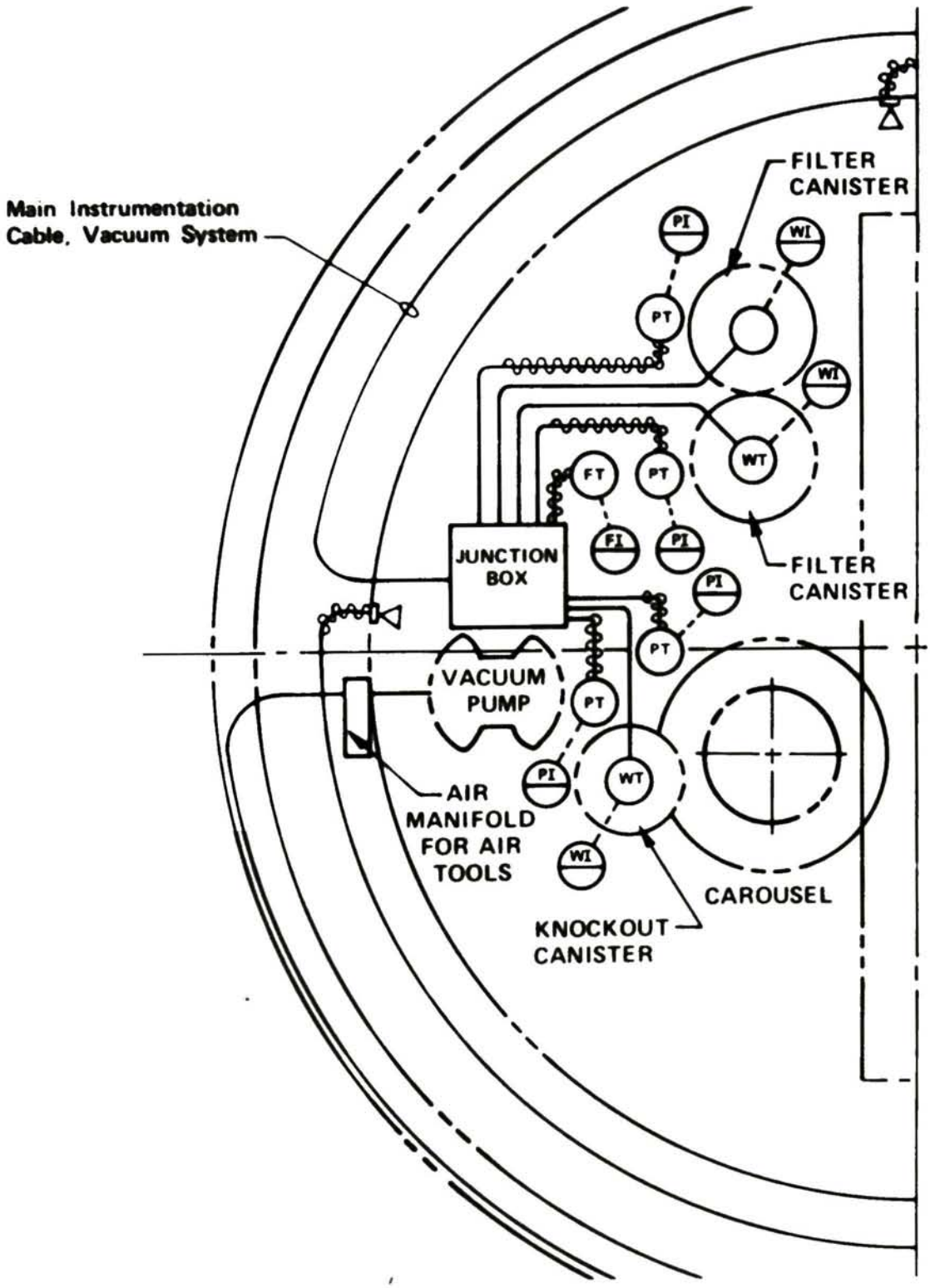

Figure 37. Vacuum system control hardware.

tachometer to close the loop. The speed control is a small dc power supply attenuated through a panel-mounted potentiometer. A key switch on the front panel (Figure 36) will enable the amplifier. When the Shielded Work Platform moves, warning lights will flash.

Hydraulic Power and Control Equipment

The hydraulic system consists of a pump, reservoir, and necessary high temperature and low-level instrumentation. The system does not require cooling water. The hydraulic power supply will be driven by an induction motor. The hydraulic power system will provide the hydraulic power for the End Effectors and Long Handled Tools. The hydraulic power supply was sized to provide enough capacity for two heavy duty End Effectors at the same time. The two End Effectors require up to 16 gpm at 2000 psi hydraulic fluid supply. These End Effectors are manually controlled from the local service panel. The End Effector hydraulic hoses will be carried onto the Shielded Work Platform by the power track described under cable management.

Air Supply and Control Equipment

The air supply is for the Vacuum System pump. The requirements are 90 psi at 100 SCFM. The air supplied through a 1-in. ID hose is carried onto the Shielded Work Platform by the power track described under cable management.

Viewing System

The Viewing System will use the Plenum Assembly Removal (PAR) inspection equipment, with the addition of two Hoffman boxes (Figure 38) containing the Variacs for the pool lights. The PAR equipment will be located on the 331-ft, 6-in. elevation. This system includes two cabinets that contain the camera control units and local video monitors. This system is tied into the TMI-2 coordination center. The entire system will consist of five camera control units, six 9-in. monitors and an audio base repeater station for communication with the coordination center. The

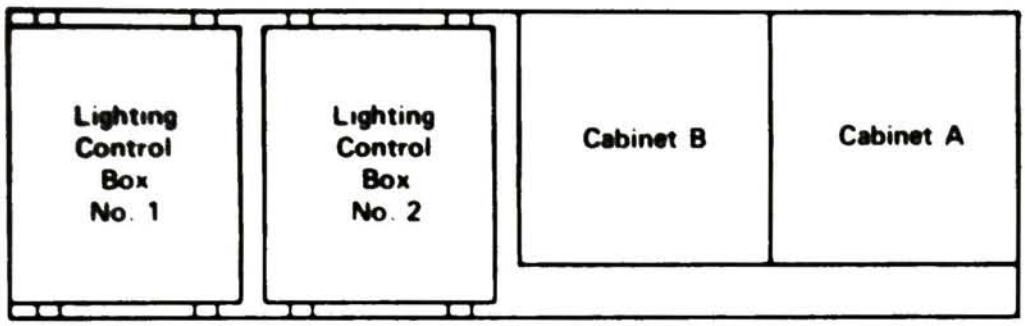

766674-2A

Figure 38. Viewing system console.

camera control units include three Rees R-93 and two Diamond ST-5 units. These units provide focus and iris control for the cameras. The output signals to the command center will come directly from the video monitors. Provided on the Shielded Work Platform will be 6-in. monitors that can be attached to the tool slot safety rail. These monitors will be portable and are meant to be used in conjunction with the long handled tools. The coaxial cables for these monitors will be handled by the cable management system.

The cable management track will provide three Rees camera cables. The cables will be hard piped to local service panel near the midpoint of the tool slot. This termination will consist of the standard cable connectors for the three cameras. The long handled tool operator can plug his camera into a control unit without having to drape the cable over the side of the Shielded Work Platform.

Cable Management

The objective of the cable management system is to minimize the number of cable and hose assemblies routed onto the Shielded Work Platform. Reducing clutter on the work platform should enhance defueling operations. The cable management system routes all of the stationary and moving cables and hoses. These cables and hoses include electrical, hydraulic, and pneumatic as shown in the general arrangement in Figure 33.

The cables are routed through a power track from the canal floor onto the rotating Shielded Work Platform. The power track is supported, as shown in Figure 39 in a large takeup frame. The takeup drum travels 15 ft allowing the power track to unreel 180 degrees each way on the Shielded Work Platform.

Viewing System

The Final Design Report for the Viewing System is found in Reference 12. A summary tool list is included in Table 6. The Viewing

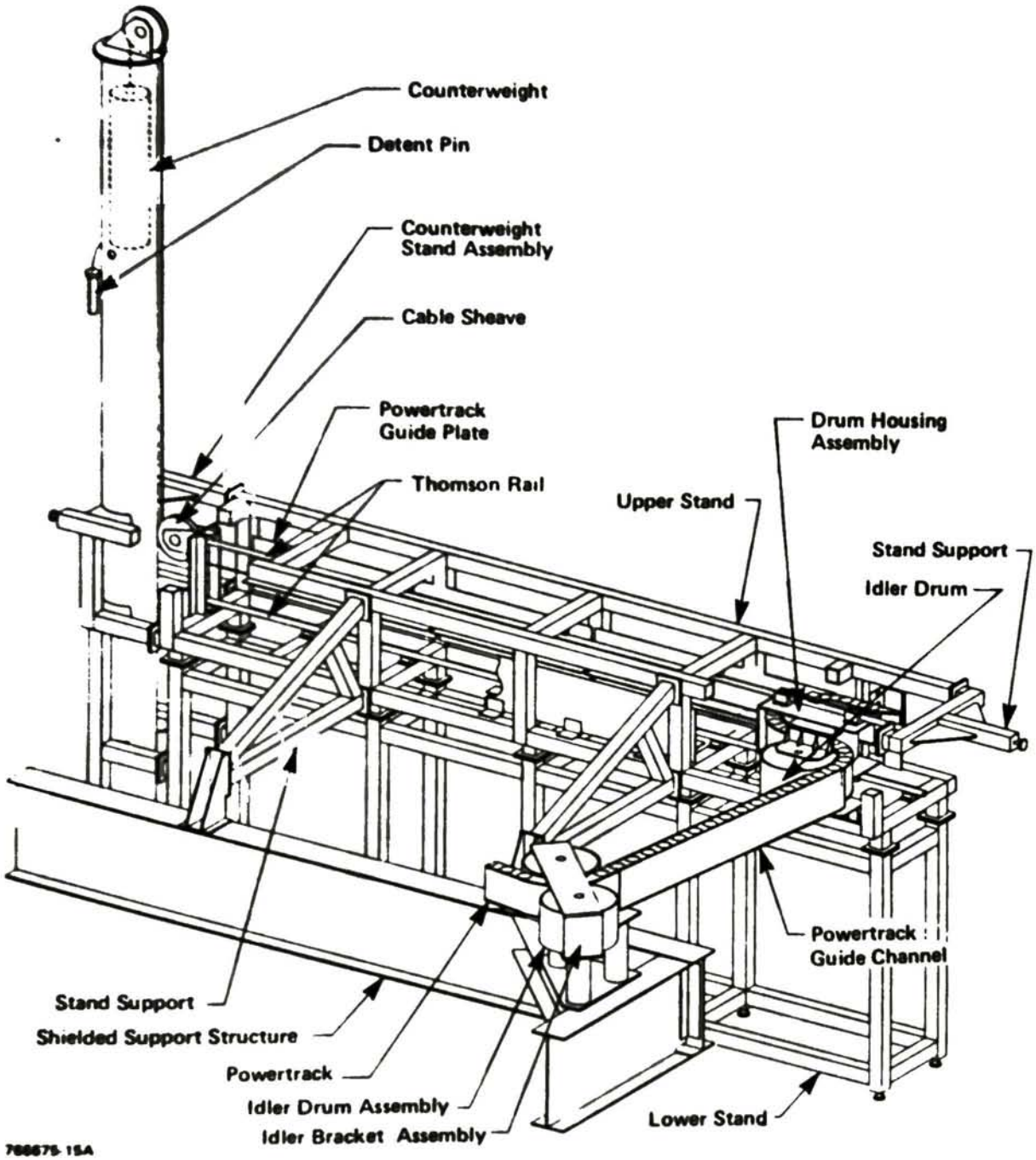

Figure 39. Cable management system.

System will be used to support all defueling activities. The operations to be viewed during this phase include vacuuming, pick and place, and canister removal and installation in the reactor core. The Viewing System can be divided into subsystems which correspond to the operations to be viewed or the type of video equipment being used. These subsystems are as follows:

- PAR Video Equipment
- PAR System Camera Handling Tools
- General Reactor Vessel Lighting System
- Vacuum Nozzle Viewing Equipment
- Instrumentation and Controls.

The equipment needed for the TMI-2 Viewing System includes:

- Radiation Resistant, Waterproof Cameras
- Camera Control Units and Cabling
- Waterproof Lights
- Light Control Units and Cabling
- Camera Positioning Tools
- Video Monitors and Recorders.

TABLE 6. WBS 612 VIEWING SYSTEM TOOL LIST

Tool/Component	Drawing Number
Fuel Canister Monitoring Camera Positioning Tool	Not Supplied by Westinghouse
Portable Camera Positioning Tool	Not Supplied by Westinghouse
Maint. Camera Positioning Tool	Not Supplied by Westinghouse
Vacuum Nozzle Camera Positioning Tool	1735E68
Reactor Vessel Core Lighting Positioning Tools	1735E41

Westinghouse will use the PAR (Plenum Assembly Removal) Video Inspection System to the fullest extent possible in the Viewing System. The PAR System is supplied by GPU Nuclear and is currently being used at the TMI-2 site.

The PAR System has two basic subsystems:

- Video Equipment
- Camera Handling Tools.

The video equipment includes cameras, lights, controls, cables, and monitors. The camera handling tools position the cameras so that the operators can remotely view the reactor vessel core. The Viewing System will use the video equipment and the camera handling tools. In addition to the PAR System, a general reactor lighting system and clamps for vacuum nozzle viewing have been added to complete the equipment necessary to view defueling operations.

PAR Video Equipment

The PAR Video equipment can be divided into the Reactor Building equipment and the coordination center equipment. The Reactor Building equipment primarily acquires the information and provides immediate monitoring and control of the video equipment by the operator manipulating the tools. The coordination center provides control for monitoring and recording operations from outside the Reactor Building.

PAR System Camera Handling Tools

The PAR Camera Handling Tool assembly consists of a camera handling tool end, winch assembly, camera cable, Rees R93 camera, and a tool handle (refer to Figure 40). With this setup, the operator can remotely position the camera in predefined locations. These camera handling tools will be used for general surveillance, maintenance, and canister viewing.

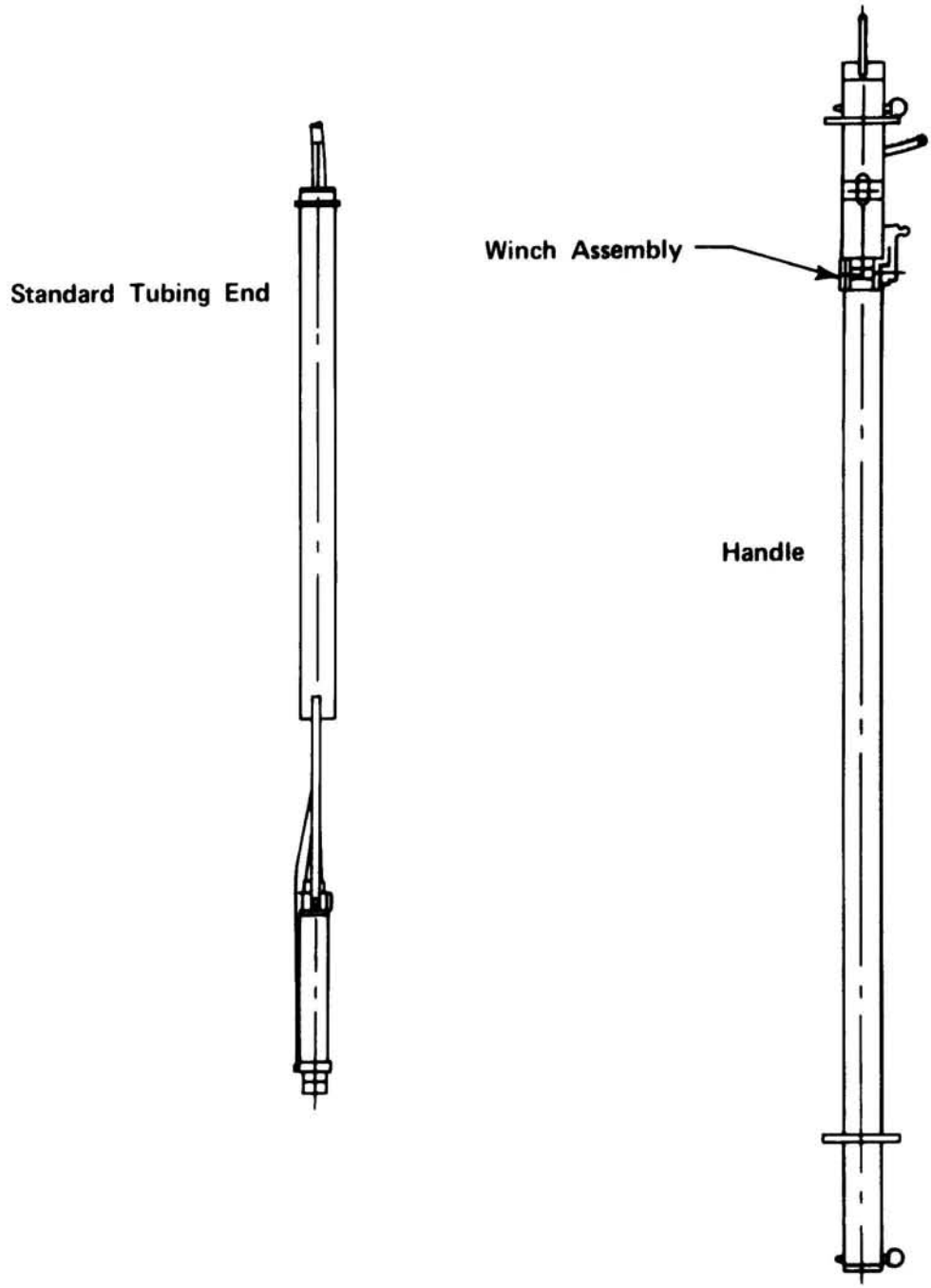

766676-14A

Figure 40. PAR camera handling tools.

General Reactor Vessel Lighting System

The purpose of the general reactor vessel lighting system is to provide general background lighting under the work platform during defueling operations. All of the components of this system are designed to operate in the borated water of the reactor vessel. Figure 41 illustrates the general reactor vessel lighting system design.

The system is comprised of four lighting poles or positioners. Three 1000 watt pencil lights are mounted on each pole. The poles are mounted approximately 90 degrees apart on the off-gas seal. The light positioners consist of two 1.00-in. schedule 10 stainless steel pipe sections. The sections are bolted together at two mating blind flanges. Both ends of the poles are sealed. The bottom end of each positioner has a stainless steel sphere. The purpose of the sphere is twofold: (a) to offset the positioner from the periphery of the reactor vessel which, in turn, will protect the lights from hitting the side during installation and defueling operations and (b) to ease installation by providing a rounded edge for the pole to ride on as it is being lowered against the vessel wall.

Vacuum Nozzle Viewing Equipment

The purpose of the Vacuum Nozzle Viewing Tool is to position a Rees R93 and a Hydro-Products SQ-500 light near the vacuum nozzle so that a closeup view of the vacuum nozzle can be obtained during vacuuming. The camera and light are secured to the vacuum nozzle positioner using stainless steel clamps. A stainless steel guard for the camera is also provided to protect the camera and lens while still maintaining a compact assembly (refer to Figure 42).

Instrumentation and Controls

The Viewing System will use the PAR equipment with the addition of two Hoffman boxes containing the variacs for the general reactor vessel lights. The PAR equipment is located on the 331-ft, 6-in. elevation, in a

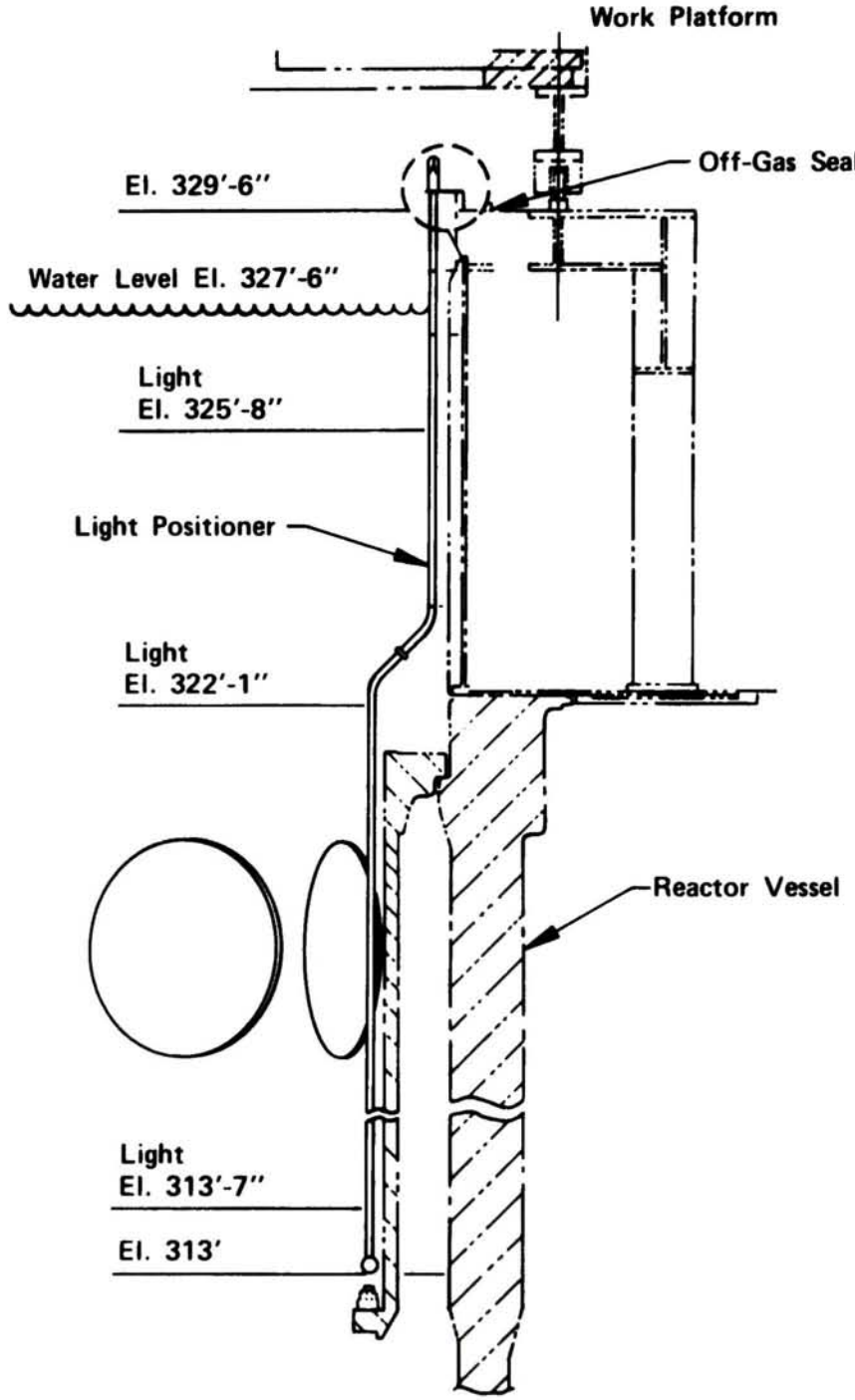

766676-6A

Figure 41. General reactor vessel lighting positioner.

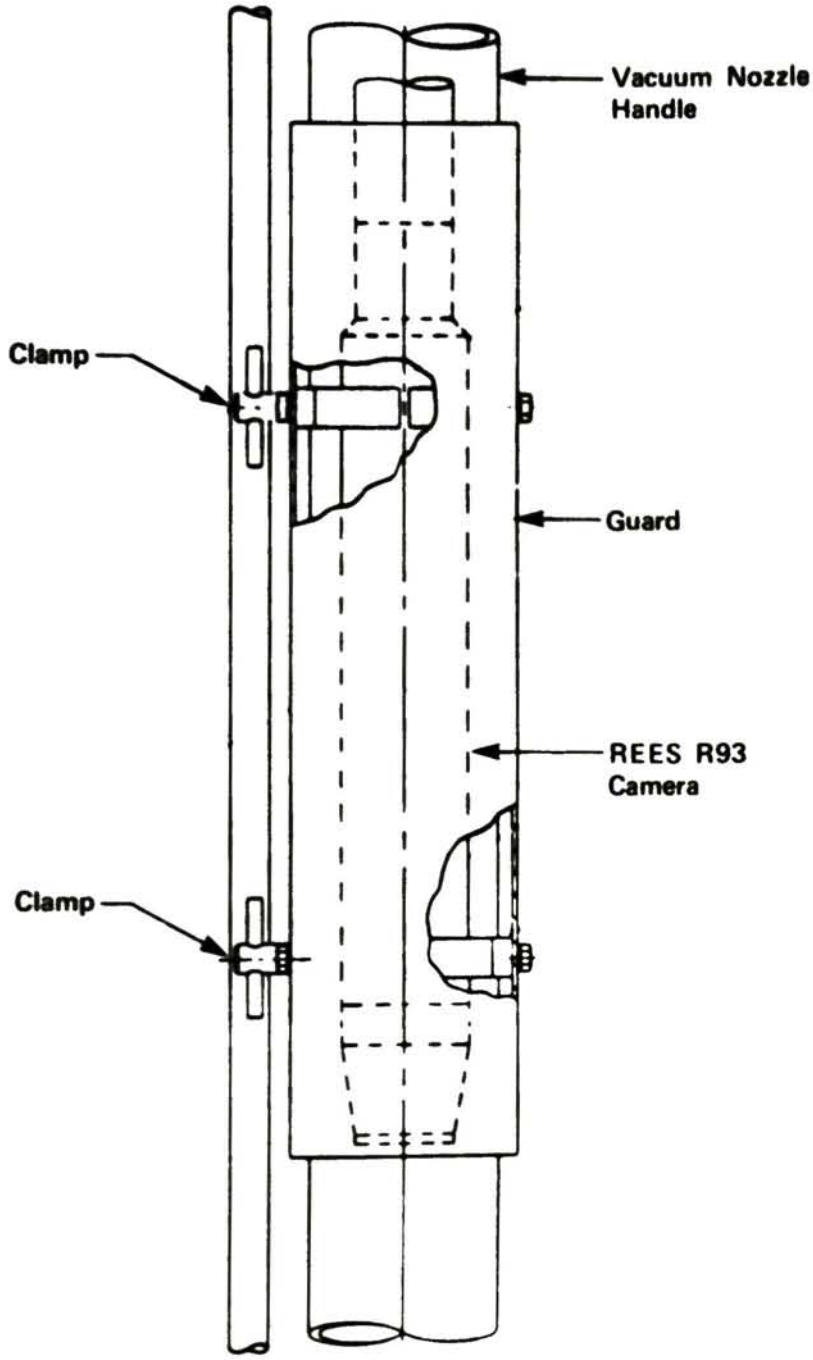

766676-5A

Figure 42. Vacuum nozzle camera and support equipment.

cabinet with the dimensions 22 in. X 22 in. X 47 in. This cabinet contains the camera control units and local video monitors. This system is tied into the command center. Power for the cabinets will be provided by the power distribution system. The entire system will consist of five camera control units, six 9-in. monitors, and an audio base repeater station for communication with the command center. The camera control units include three Rees R93 and two Diamond ST-5 units. These units provide all focus and iris control for the cameras. The output signals to the command center will come directly from the video monitors. Also provided on the work platform will be three 6-in. monitors that may be attached to the tool slot safety rail. These monitors will be portable and are meant to be used in conjunction with the long handled tools.

Canister Positioning System

The Final Design Report for the Canister Positioning System is found in Reference 13. A summary tool list is included in Table 7. The Canister Positioning System illustrated in Figures 43 and 44 has five canister holding positions, a means for lowering all canister positions, a rotational drive unit, a CPS rotational position measuring device, a removable center access location, an integral shielded support structure, and various hand tools to facilitate operation. The CPS is mounted to the Shielded Work Platform. The instrumentation for the CPS is located on the Vacuum System control console.

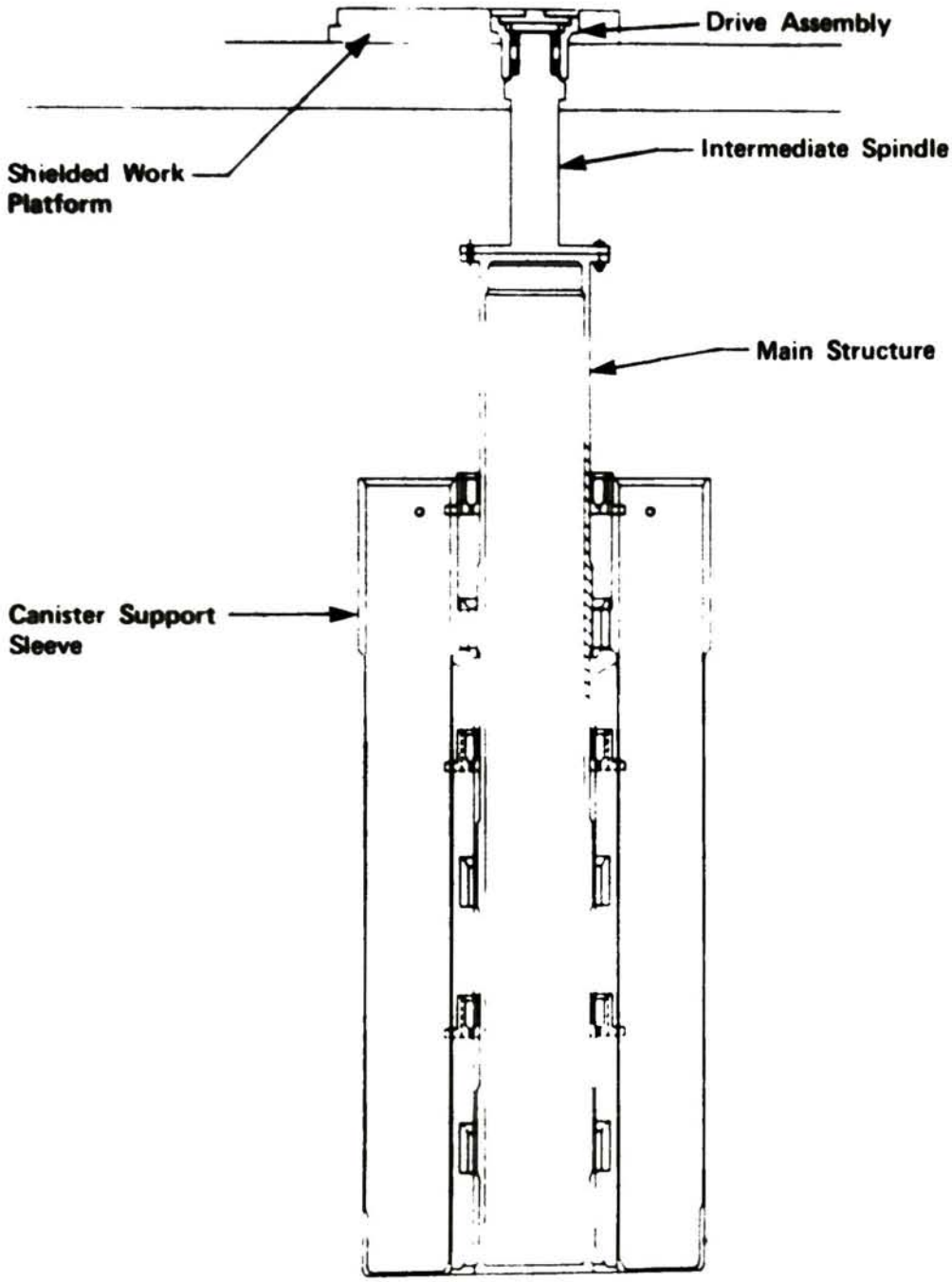

766676-13A

Figure 43. Canister positioning system elevation view.

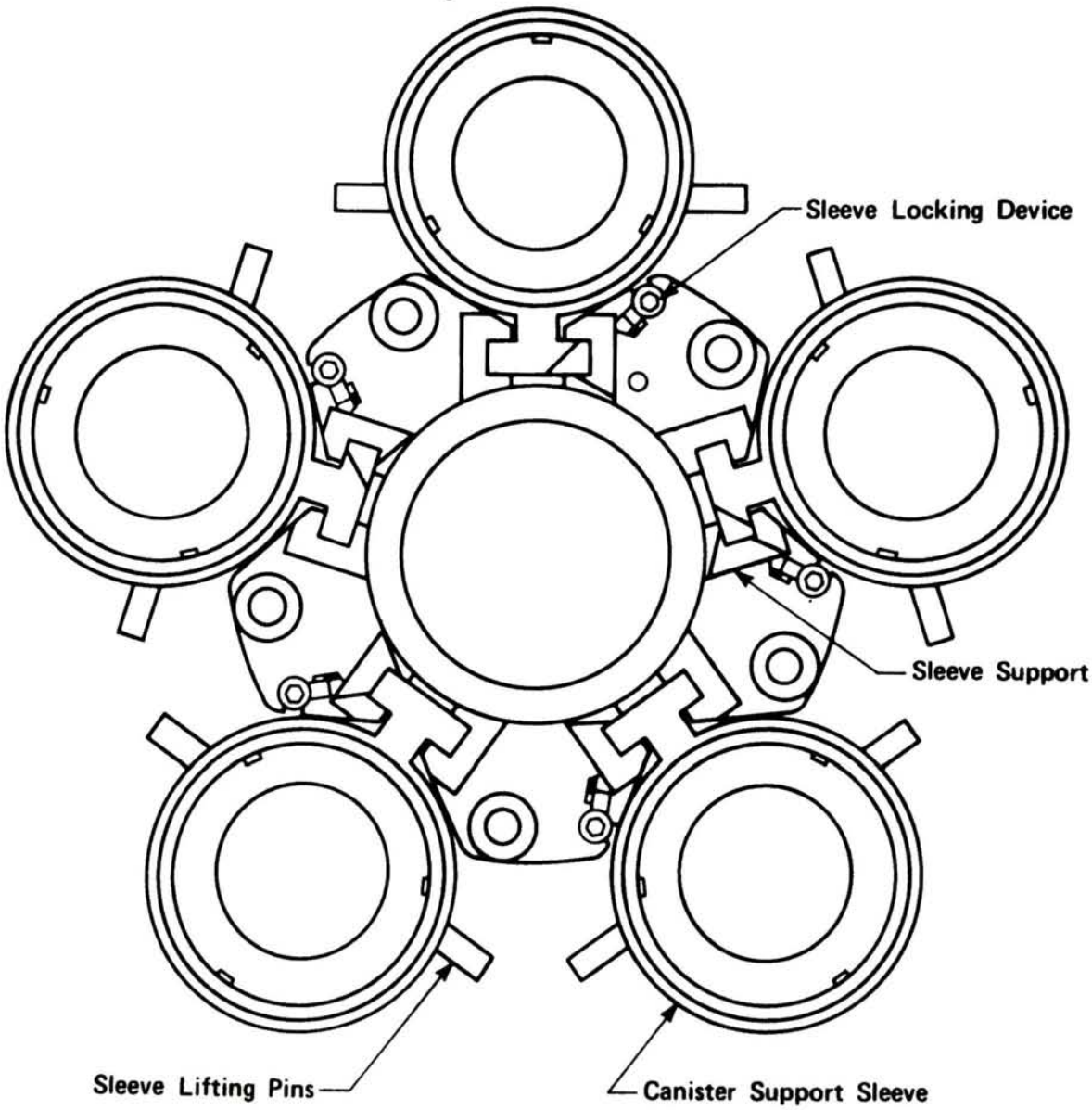

766676-12A

Figure 44. Canister positioning system plan view.

TABLE 7. WBS 742 CANISTER POSITIONING SYSTEM TOOL LIST

Tool/Component	Drawing Number
Canister Positioning System	1735E81
Canister Support Sleeve	1735E71
Main Structure	1735E70
Sleeve Locking Device	1735E83
Intermediate Spindle	1807E02
Drive Assembly	1807E03
Ancillary Tools:	
Sleeve Handling Tool	1735E78
Fuel Canister Seal Cover	1735E86
Knockout Canister	1735E87
Indexing Sleeve	
Cover/Indexing Sleeve	1735E88
Handling Tool	

The Canister Positioning System supports fuel and knockout canisters at the 324-ft, 11-in.; 320-ft, 6-in; and 317-ft, 6-in. elevations. Canister Elevation 1 provides approximately 6 in. of clearance between the bottom of the CPS and the top of the core. Canister Elevation 2 allows fuel debris up to 2 ft in length to be placed in a fuel canister while maintaining 4 ft of water above the debris. Canister Elevation 3 permits loading fuel debris up to 5 ft in length.

Canister Support Sleeve

The individual canisters are held in support sleeves shown in Figure 45 equally spaced on a 1-ft, 11-in. radius. When the canister is loaded into the sleeve, the tang on the canister orienting device is swung into the canister locating groove using the Manually Operated Grapple tool. The tang prevents the canister from rotating within the sleeve.

To change canister elevation, the Sleeve Handling Tool illustrated in Figure 46 will capture the two lifting pins on the canister sleeves and lift the sleeve. This lifting point is off center so that the bottom of the sleeve will tilt and contact the curved surface on the bottom of the Canister Positioning System. The sleeve is raised until the support lugs

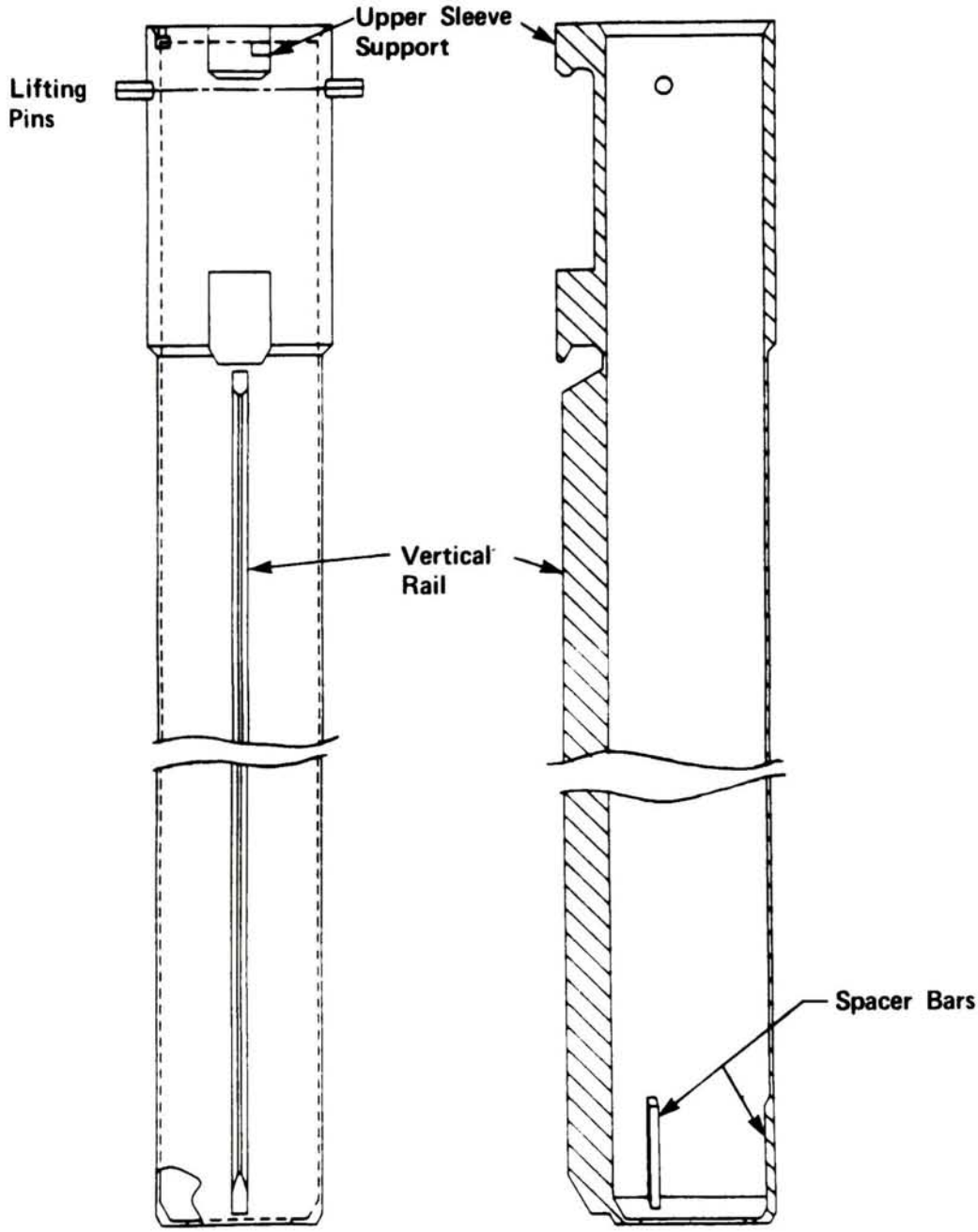

766676-11A

Figure 45. Canister support sleeve elevation.

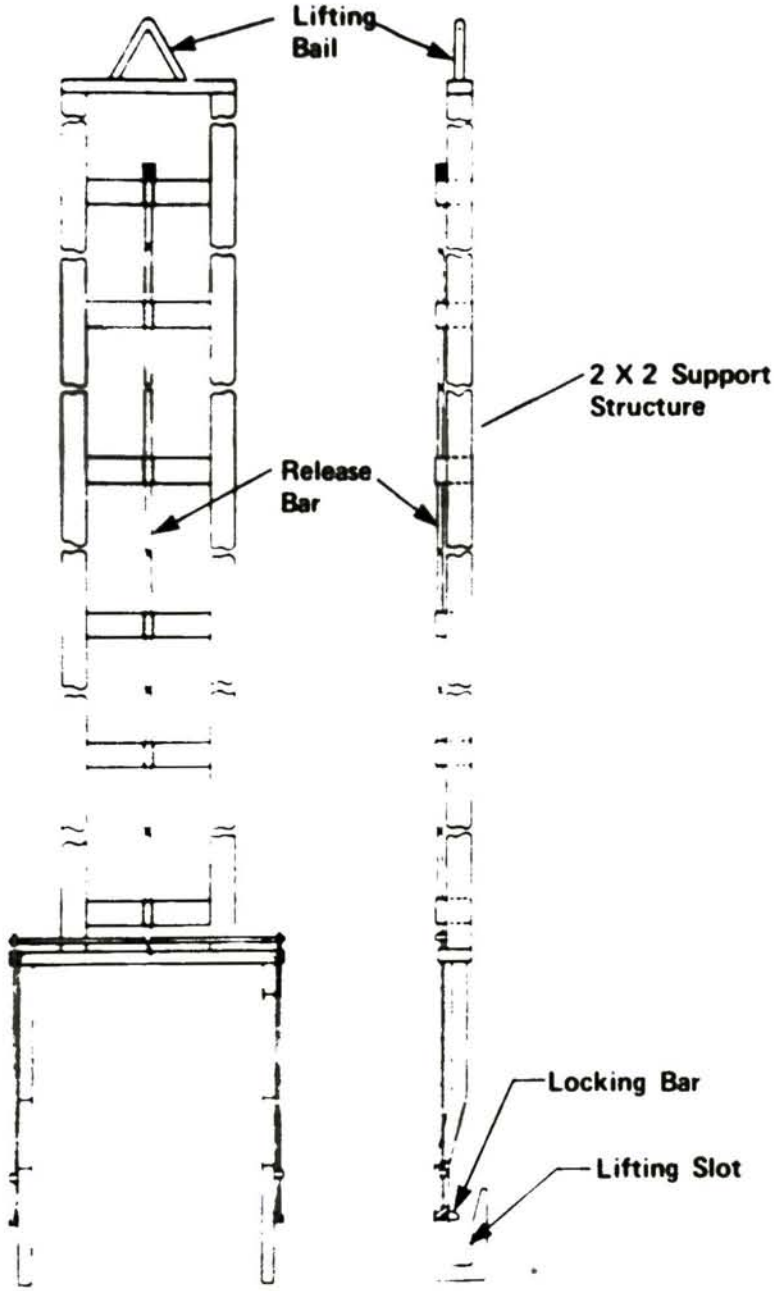

766676-10A

Figure 46. Sleeve handling tool.

clear their rests. It is then lowered into the next resting position and the sleeve handling tool is detached from the sleeve. The sleeve can now be locked in place.

Fuel Canister Seal Cover

The Fuel Canister Seal Cover illustrated in Figure 47 is required to protect the sealing surface on the fuel canisters. The cover design includes two vented locating holes, two lifting pins, two orientation slots, and a conical top opening. When not in use, it will be stored on a rack attached to the CPS main structure. The cover is placed on top of fuel canisters using the sleeve handling tool in the same way the tool is used to change sleeve elevations.

Main Structure

The Main Structure shown in Figure 48 is a 20-in.-diameter cylindrical spindle with a series of sleeve supports, sleeve guide plates, and positior locating devices attached to it. The structure is modular to facilitate entry to the Reactor Building.

Bearing Assembly

The entire Canister Positioning System assembly rides on the two bearings illustrated in Figure 49. The upper bearing takes all thrust loads. The bearing is mounted into a plate which rests on the Shielded Work Platform I-beams. A second bearing below the Shielded Work Platform resists the moment incurred when the CPS is loaded unevenly. It also restricts spindle deflection caused by uneven loading. The bearing mount is supported by three vertical ribs which extend from the Shielded Work Platform. The bearing is located above water level and sealed to protect it from the defueling water.

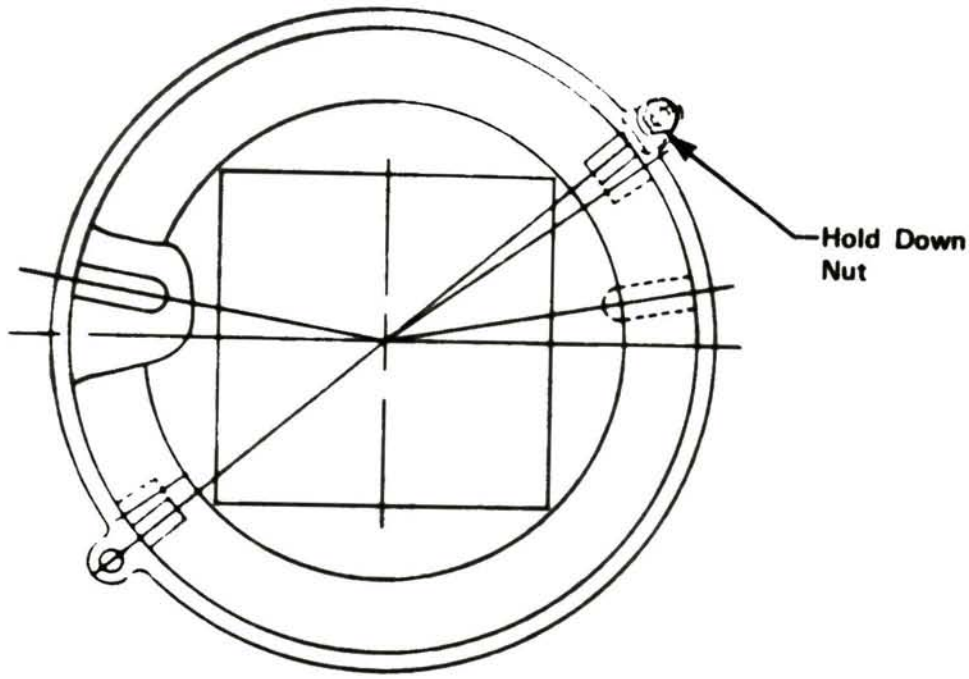

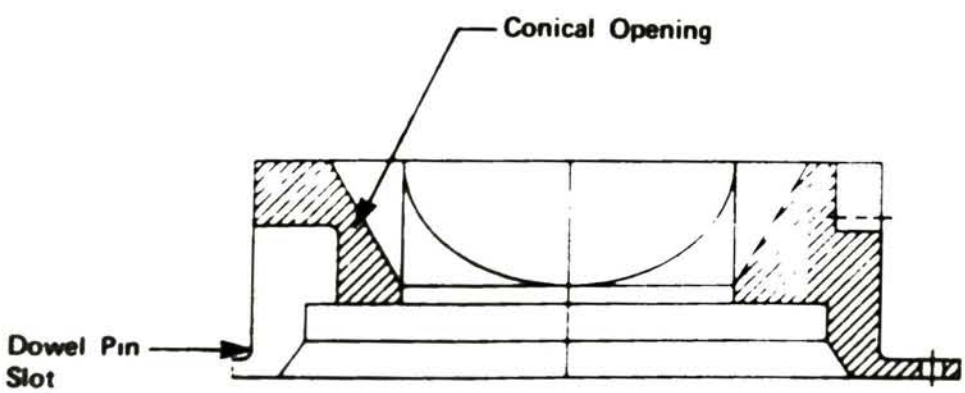

766676-9A

Figure 47. Fuel canister seal cover.

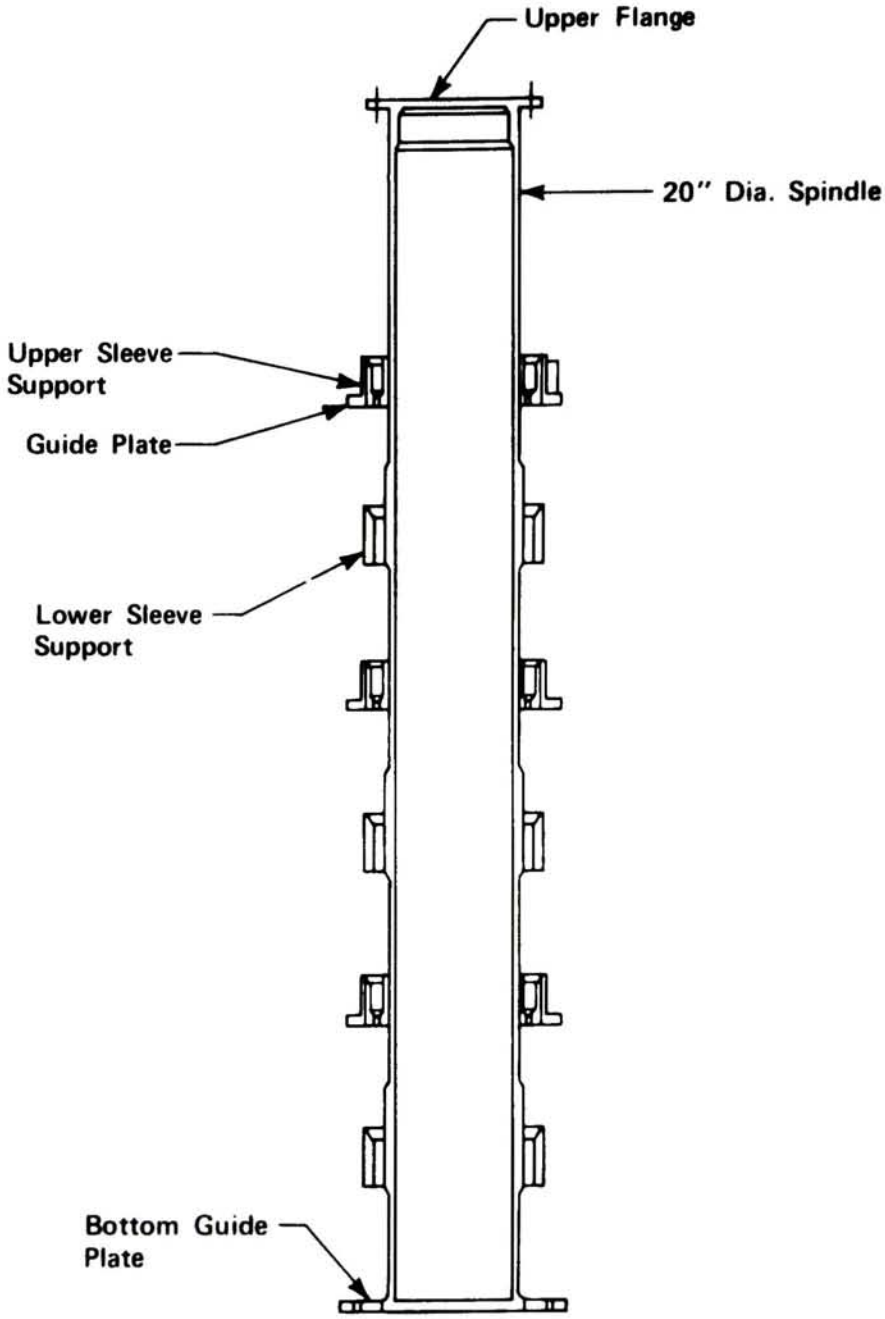

766676-8A

Figure 48. Canister positioning system main structure.

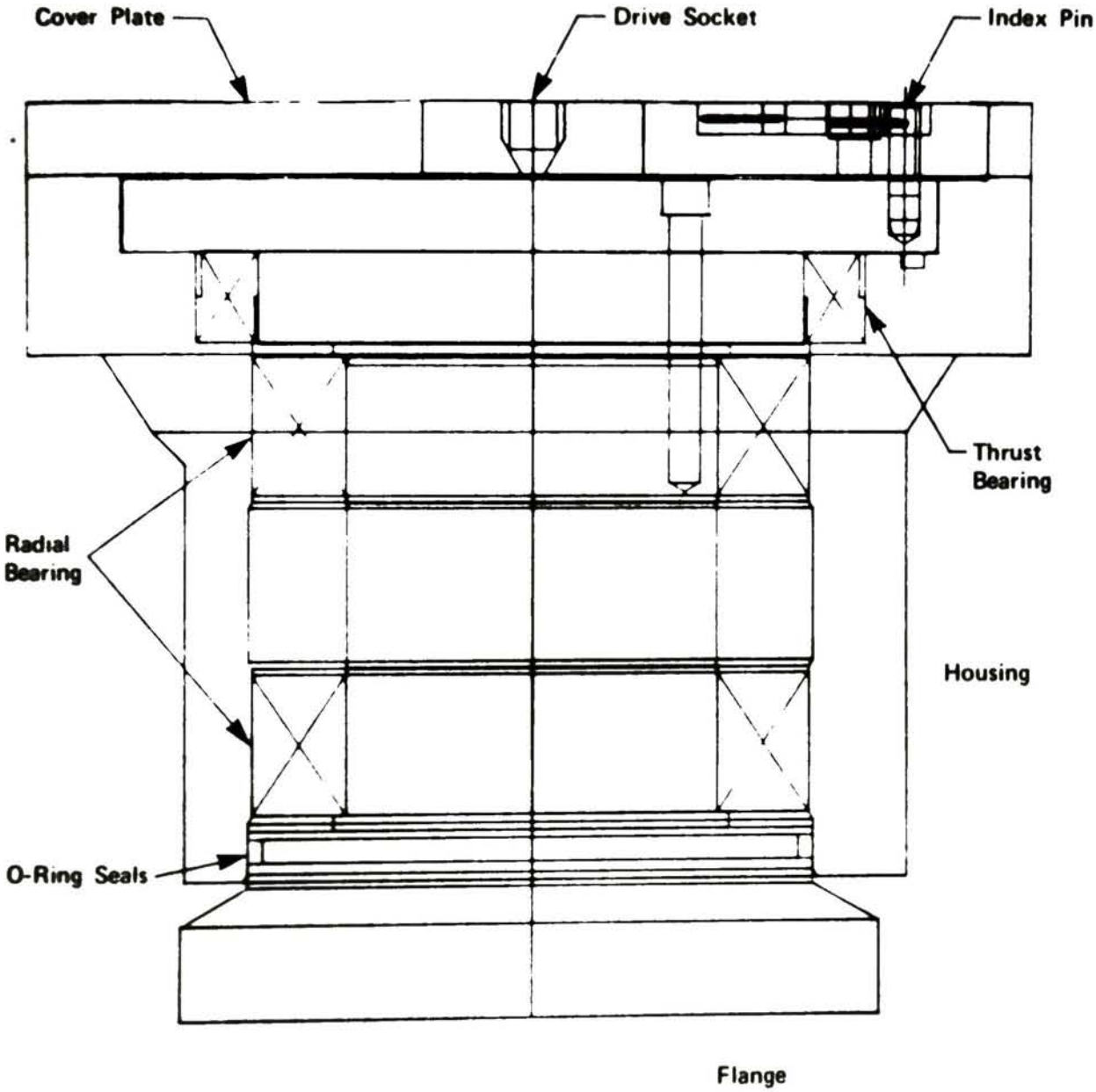

786676-7A

Figure 49. Bearing assembly.

Maintenance System

The Maintenance System is used to perform maintenance operations on contaminated tools or equipment which have been used in the reactor vessel for defueling operations. The system consists of a shielded work station or glove box, casks for storage or transfer of contaminated components, and special tools required to disassemble, repair, and reassemble the equipment. Interface connections for site services are provided which include air, water, and power.

During defueling operations, all of the tools that enter into the reactor vessel will potentially become contaminated. As they are withdrawn individually from the vessel they will be washed with a water spray system under the Shielded Work Platform to remove as much loose contamination as possible. They will be withdrawn into a plastic cover or shielded container for transfer to the maintenance work station storage for ultimate disposition.

Maintenance operations on the defueling tools will be performed within the work station. The work station is envisioned as a shielded glove box containing a set of standard and special tools required to service the defueling tools.

Test Assemblies

The Final Design Report for the Test Assemblies that support the Vacuum System, Viewing System, and Canister Positioning System is found in Reference 14. A summary tool list is included in Table 8. The Qualification Test Support Structure is a bolted carbon steel structure Defueling Test Asembly (DTA) designed to simulate part of the Shielded Work Platform and the reactor vessel. Major areas included are all the access openings between the Shielded Work Platform beams and the 85-in. reactor clear radius. Other test assemblies will be identified and designed at a later date.

TABLE 8. WBS 781, 782, 784 TEST ASSEMBLY TOOL LIST

Tool/Component	Drawing Number
Qual. Test Support Structure	1734E91

End Effectors

The Preliminary Design Report for the End Effectors is found in Reference 15. A summary tool list is included in Table 9. To minimize the size of tools required and the space for storage on the tool racks, several end effectors will be supplied. These end effectors will accomplish gripping, cutting, lifting, positioning, moving, etc. of debris as required for defueling. The end effectors will be designed for use with long handled tools, ROSA, and the manual tool post. A common design coupler will be used for attachment of an end effector to each tool.

TABLE 9. WBS 524 END EFFECTORS TOOL LIST

Tool/Component	Drawing Number
Impact Chisel	1768E84
Hydraulic Abrasive Saw	1768E82
Cutting Jet	2D32379
Top Access Fuel Assembly	1763E87
	Lifting Tool
Guide Tube Flaring Tool	1763E87
Side Access Fuel Assembly	1763E79
	Lifting Tool
Impact Drill	1768E85

Impact Drill

The Impact Drill will be used to fracture or bore holes into fused core material. It uses a commercially available hammer drill which provides up to 2000 impacts per minute and a drill rotation rate up to 3.5 rpm. It requires the same hydraulic power supply as the Impact Chisel.

Abrasive Saw

The Abrasive Saw will be used to cut fused material or other debris. It requires the same hydraulic power supply as the Impact Chisel. It can make a 2-in.-deep cut with an 8-in.-diameter cutting wheel or a 3-in.-deep cut with a 10-in.-diameter cutting wheel.

Cutting Jet (Hydrolaser)

The high pressure Cutting Jet can be used to cut various kinds of debris. It develops its cutting action by entraining abrasive grit in a 35,000 psi water stream to abrade the piece being cut. The system includes a hopper for the abrasive, a high pressure pump, and a mixing block. The mixing block contains the water orifice and a replaceable tungsten carbide nozzle.

Impact Chisel

A hydraulic Impact Chisel will be used to break up the fused debris into easily handled pieces. The Impact Chisel uses a commercially available hydraulic hammer to deliver the chisel at about 2,000 impacts per minute. It operates on Union Carbide UCON WS-34 hydraulic fluid supplied by the Control System hydraulic power system. It may be mounted vertically for long handled tool use or horizontally on the Manual Tool Positioner. Proof-of-principle testing has proven the long handled tool application is possible. Further testing will be performed to evaluate the horizontal application.

Top Access Fuel Assembly Lifting Tool

When side access is unavailable, the Top Access Fuel Assembly Lifting Tool will be used to grip fuel assemblies by the guide tubes at the top.

Side Access Fuel Assembly Lifting Tool

When side access is available, the Side Access Fuel Assembly Lifting Tool will be used to grip and lift partial assemblies up to 5 ft long.

Manipulator--Remotely Operated Service Arm (ROSA)

The Preliminary Design Report for the Manipulator is found in Reference 16. A summary tool list is included in Table 10. ROSA is a Westinghouse designed tool positioning system consisting of a robotic arm, a servo controller and a supervisory computer. The arm, in the Reactor Building, is powered through a 600-ft long umbilical cable from the servo controller and supervisory computer, which are located in the coordination center. Audio and video systems and tooling used with the arm are also run from the coordination center.

TABLE 10. WBS 534 MANIPULATOR TOOL LIST

Tool/Component	Drawing Number
ROSA Arm	1763E74
ROSA Grapple	1770E11
ROSA Scoop	1770E11

The ROSA service arm is an anthropomorphic, or humanlike, manipulator arm. Current arms consist of six actuators assembled to give a two degree-of-freedom shoulder, an elbow, and a three axis wrist. This allows the arm to both position and orient a tool in space. These arms are assembled in a modular fashion by assembling the self-contained actuators together with linking pieces. By using this type of construction, arms can be readily tailored to particular applications.

Each all-electric actuator module is a self-enclosed water tight assembly consisting of a motor, geartrain, resolver, and electro-mechanical brake. The original unit, the 6000 model, has a peak torque output of 500 ft lb and weighs less than 21 lb. Using the same mechanical configuration, a 3000 model with 270 ft lb torque was later designed.

The servo controller unit powers and controls the positioning of the arm. This Westinghouse designed unit has a microprocessor based software servo loop, as well as special brake control logic cards. It can power the arm up to 600 ft away through the fully shielded arm umbilical cables.

The supervisory computer and its console are the main operator interfaces for the arm. Because the ROSA arm must be adaptable to unknown environments, a large number of control modes for the arm exists:

- Cartesian Motion Joystick--Through a three axis joystick, the arm is controlled "real-time" by the operator with the supervisory computer coordinating the arm motion.

- Teach and Repeat--Motions can be taught and played back, either forward or backwards.

- Off-Line Programming--Programs can be generated mathematically or using mockups and put into the supervisory computer via floppy discs.

- Single Axis Jog--Individual axes can be jogged forwards or backwards with variable speeds.

- Pendant--Control can be transferred to a jog control pendant inside containment.

The application of ROSA will add flexibility to the defueling process for unstructured tasks. The ROSA control system and arm capabilities enable precise maneuverability and positioning of tools and inspection devices which in turn simplifies the design of these devices.

Tool Positioning System

The Preliminary Design Report for the Tool Positioning System is found in Reference 17. A summary tool list is included in Table 11. At some

point (Phase III) in defueling operations, reaction loads and positioning requirements will exceed the capabilities of long handled tools. A Manual Tool Positioner supported at the Shielded Work Platform will meet these requirements. This positioner consists of a carriage which rides on the long handled tool slot rail system, a circular post, and a horizontal arm. The carriage is manually pushed along the tool slot. A rack and pinion drive is under consideration to provide this motion. The post is constructed of stainless steel pipe and will be assembled in sections. It will not telescope, but sections can be added or removed as required for core access. The post will rotate within the carriage. The horizontal arm will provide support for end effectors and will telescope about 12 in.

TABLE 11. WBS 544 TOOL POSITIONING SYSTEM TOOL LIST

Tool/Component	Drawing Number
Manual Tool Positioner:	1770E73
Carriage	1770E74
Post	1770E73
Tool Mounting	1770E89

Tool Racks

The Preliminary Design Report for the Tool Racks is found in Reference 18. A summary tool list is included in Table 12. During the defueling operation, long handled tools and end effectors will be used intermittently as required. Once installed within the reactor vessel, the item should be kept within the vessel until it will no longer be used. Tool racks are used to provide the required temporary storage. These tool racks will be mounted to the Shielded Work Platform. Tools will be seated and stored in slots after being used until required for use again. Because of the number of tools required and the space confines under the Shielded Work Platform, a stacked arrangement of tool racks may be required. The tool rack(s) will be able to rotate independently of the Shielded Work Platform so that the correct slot appears under the long handled tool slot in the Shielded Work Platform to install or remove a tool.

TABLE 12. WBS 554 TOOL RACKS TOOL LIST

Tool/Component	Drawing Number
Bulk:	
Main Tool Rack	1770E76
Stationary Tool Rack	1770E76

In addition to the above tool rack(s) for contaminated tools, a tool rack is required for clean tools after they have been assembled but prior to their use. This tool rack will probably be supported to the canal wall or suspended from the Shielded Support Structure. The size of the rack and its location will be determined from the Reactor Building studies.

Support Tools

The preliminary design effort for the Support Tools has not been initiated. As the fuel debris is removed, flow holes in the lower core support plate will be exposed. To prevent additional debris from falling through the core plate into the vessel bottom, covers or plugs will be used to close each hole as it is exposed.

TABLE 13. WBS 571 SUPPORT TOOLS TOOL LIST

Tool/Component	Drawing Number
Flow Hole Cover Plate	TBD

REFERENCES

1. Westinghouse Drawing 1737E60, Rev. 0, TMI-2 Defueling Interface Control.

2. Westinghouse Drawing 1737E78, CP-5, TMI-2 Dry Defueling Reactor Internal Dimensions.

3. Waste Technology Services Divison Report, WTSD-TME-037, TMI-2 Defueling System Design Specification.

4. Technical Specification 15737-2-R200B(Q), Rev. 1, Technical Specification for Fuel Removal and Fines/Debris Vacuum System.

5. Waste Technology Services Division Report, WTSD-TME-018, Rev. B, WTSD Quality Assurance Program Plan for Fuel Removal and Fines/Debris Vacuum System.

6. Waste Technology Services Divison Report, WTSD-TME-051, Rev. 0, Task Description for TMI-2 Defueling Tools.

7. Waste Technology Services Division Report, WTSD-TME-054, Rev. 0, Final Design Report for Shielded Work Platform (WBS-721).

8. Waste Technology Services Division Report, WTSD-TME-053, Rev. 0, Final Design Report for Shielded Support Structure (WBS-711).

9. Advanced Energy Systems Division Report, TMI-AD-84-032, Rev. 0, TMI-2 Early Defueling Fines/Debris Vacuum System Final Design Report (WBS-412).

10. Nuclear Services Integration Division Report, Final Design Report for Long Handled Tools (WBS-514).

11. Waste Technology Services Divison Report, WTSD-TME-055, Draft, Final Design Report for Control System (WBS-561, 564).

12. Advanced Energy Systems Division Report, TMI-AD-84-042, Rev. 0, Viewing System Final Design Report (WBS-612).

13. Advanced Energy Systems Division Report, TMI-AD-84-045, Rev. 0, TMI-2 Defueling Canister Positioning System Final Design Report (WBS-742).

14. Advanced Energy Systems Division Report, TMI-AD-84-1075, TMI-2 Early Defueling Qualification Test Support Structure Final Design Review Package.

15. Nuclear Services Integration Division Report, SAE-SEP-DR-03 (84), Preliminary Design Review Report for End Effector Tools for Bulk Defueling of GPU Nuclear TMI-2 Nuclear Power Station.

16. Nuclear Services Integration Division Report, SAE-SEP-DR-04 (84), Preliminary Design Review Report for the Application of the W Remotely Operated Service Arm (ROSA) for Bulk Defueling of GPU Nuclear TMI-2 Nuclear Power Station.

17. Nuclear Services Integration Division Report, SAE-SEP-DR-17 (84), Preliminary Design Review Report for Manual Tool Post for Bulk Defueling of GPU Nuclear TMI-2 Nuclear Power Station.
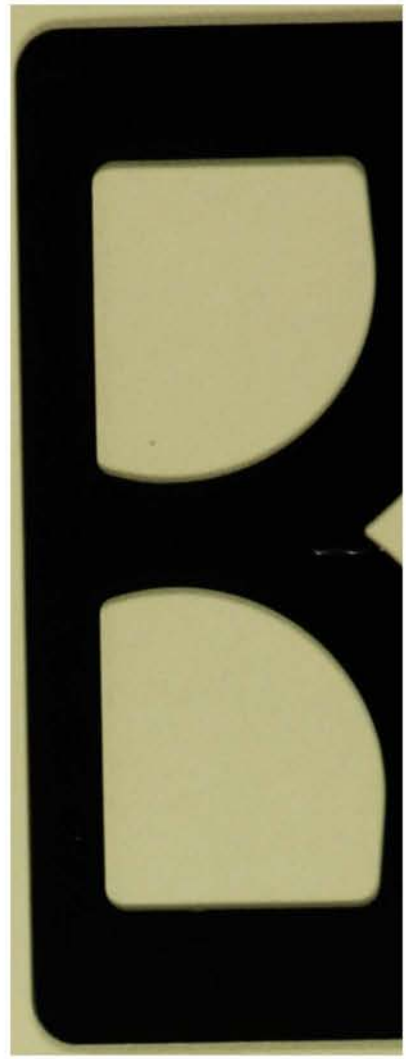
18. Nuclear Services Integration Division Report, SAE-SEP-DR-11 (84), Preliminary Design Review Report for Bulk Defueling Tool Racks for GPU Nuclear TMI-2 Nuclear Power Station.