INL/EXT-11-21041

Mathematical Analysis of a Novel Approach to Maximize Waste Recovery in a Life Support System

Michael G. McKellar
Rick A. Wood
Carl M. Stoots
Lila Mulloth
Bernadette Luna

The INL is a
U.S. Department of Energy
National Laboratory
operated by
Battelle Energy Alliance

February 2011

Idaho National Laboratory

DISCLAIMER

This information was prepared as an account of work sponsored by an agency of the U.S. Government. Neither the U.S. Government nor any agency thereof, nor any of their employees, makes any warranty, expressed or implied, or assumes any legal liability or responsibility for the accuracy, completeness, or usefulness, of any information, apparatus, product, or process disclosed, or represents that its use would not infringe privately owned rights. References herein to any specific commercial product, process, or service by trade name, trade mark, manufacturer, or otherwise, does not necessarily constitute or imply its endorsement, recommendation, or favoring by the U.S. Government or any agency thereof. The views and opinions of authors expressed herein do not necessarily state or reflect those of the U.S. Government or any agency thereof.

INL/EXT-11-21041

Mathematical Analysis of a Novel Approach to Maximize Waste Recovery in a Life Support System

Michael G. McKellar
Rick A. Wood
Carl M. Stoots
Idaho National Laboratory

Lila Mulloth
Bernadette Luna
NASA Ames Research Center

February 2011

Idaho National Laboratory
High Temperature Electrolysis
Idaho Falls, Idaho 83415

http://www.inl.gov

Prepared for the
National Aeronautics and Space Administration
and for the
U.S. Department of Energy
Under DOE Idaho Operations Office
Contract DE-AC07-05ID14517

Mathematical Analysis of a Novel Approach to Maximize Waste Recovery in a Life Support System

INL/EXT-11-21041

February 2011

Approved by:

Michael G. McKellar
Author

16 Feb 2011
Date

Carl M. Stoots
Approver

Feb 16 2011
Date

SUMMARY

NASA has been evaluating closed-loop atmosphere revitalization architectures that include carbon dioxide (CO_2) reduction technologies. The CO_2 and steam (H_2O) co-electrolysis process is one of the reduction options that NASA has investigated. Utilizing recent advances in the fuel cell technology sector, the Idaho National Laboratory, INL, has developed a $CO_2$and H_2O co-electrolysis process to produce oxygen and syngas (carbon monoxide (CO) and hydrogen (H_2) mixture) for terrestrial (energy production) application. The technology is a combined process that involves steam electrolysis, CO_2 electrolysis, and the reverse water gas shift (RWGS) reaction. Two process models were developed to evaluate novel approaches for energy storage and resource recovery in a life support system. In the first model, products from the INL co-electrolysis process are combined to produce methanol fuel. In the second co-electrolysis, products are separated with a pressure swing adsorption (PSA) process. In both models the fuels are burned with added oxygen to produce H_2O and CO_2, the original reactants. For both processes, the overall power increases as the syngas ratio, H_2/CO, increases because more water is needed to produce more hydrogen at a set CO_2 incoming flow rate. The power for the methanol cases is less than pressure swing adsorption, PSA, because heat is available from the methanol reactor to preheat the water and carbon dioxide entering the co-electrolysis process.

CONTENTS

SUMMARY v

1. INTRODUCTION 1

2. PROCESS MODELS 2
   - 2.1 Co-Electrolysis Integrated Process Models 2
     - 2.1.1 1-D Co-Electrolysis Model 2
     - 2.1.2 Implementation of Co-Electrolysis Model into UniSim 6
   - 2.2 Methanol Process with Co-electrolysis 8
   - 2.3 Co-electrolysis with Pressure Swing Adsorption 11

3. RESULTS 12

4. Conclusions and Recommendations 18

5. REFERENCES 19

Appendix A Raw Process Model Data 1

FIGURES

Figure 1 NASA's traditional life support architecture 1
Figure 2 Proposed life support architecture with methanol formation 1
Figure 3 Proposed life support architecture with CO and H_2 separation 2
Figure 4 Process flow diagram external to the electrolysis module 6
Figure 5 Process flow diagram of electrolysis module 7
Figure 6 Process flow diagram of Methanol process with co-electrolysis 10
Figure 7 Process flow diagram of co-electrolysis with pressure swing adsorption 11
Figure 8 Comparison of power required to process 1kg/day of CO_2 between methanol synthesis and PSA separation 12
Figure 9 Specific power to process 1 kg of CO_2 as a function of the syngas ratio 13
Figure 10 Mass balance of co-electrolysis combined with methanol production 14
Figure 11 Mass balance of co-electrolysis combined with PSA separation 14
Figure 12 Comparison of methanol, light gas, distilled water, and oxygen flow with inlet flows. 15
Figure 13 Light gas composition as a function of syngas ratio. 15
Figure 14 Performance ratios and carbon dioxide fraction for methanol production as a function of the syngas ratio 16
Figure 15 Mass flows of purge gas, hydrogen and oxygen flow rates compared to inlet water and carbon dioxide flow rates 17
Figure 16 Composition of hydrogen stream as a function of syngas ratio 17
Figure 17 Composition of purge gas stream as a function of syngas ratio 18

Mathematical Analysis of a Novel Approach to Maximize Waste Recovery in a Life Support System

1. INTRODUCTION

The carbon dioxide, CO_2 and steam, H_2O electrolyzer is an alternative to NASA's currently considered Sabatier reactor and water electrolyzer for CO_2 reduction and oxygen generation, respectively.

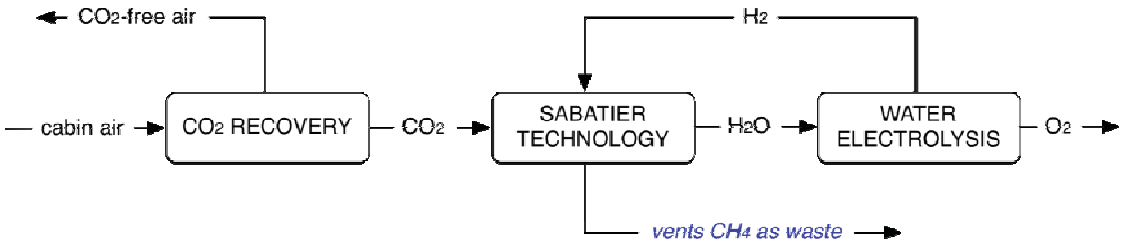

Figure 1 NASA's traditional life support architecture

In a potential, closed-loop life support architecture, the co-electrolysis unit will receive compressed CO_2 from an adsorption compressor, which is part of its atmosphere revitalization system (ARS), to generate oxygen and fuel. NASA's traditional closed-loop life support system design has separate systems for chemical reduction of CO_2 (CDRe) and water electrolysis to reclaim O_2 from metabolic CO_2. Co-electrolysis combines the CO_2 reduction and oxygen generation processes efficiently into a single hardware, reducing overall system mass. Syngas, the byproduct of co-electrolysis, can be used as a raw material for production of synthetic fuels. If syngas is used to produce liquid products, one needs to consider the increase in system mass due to the addition of the synthetic fuel process.

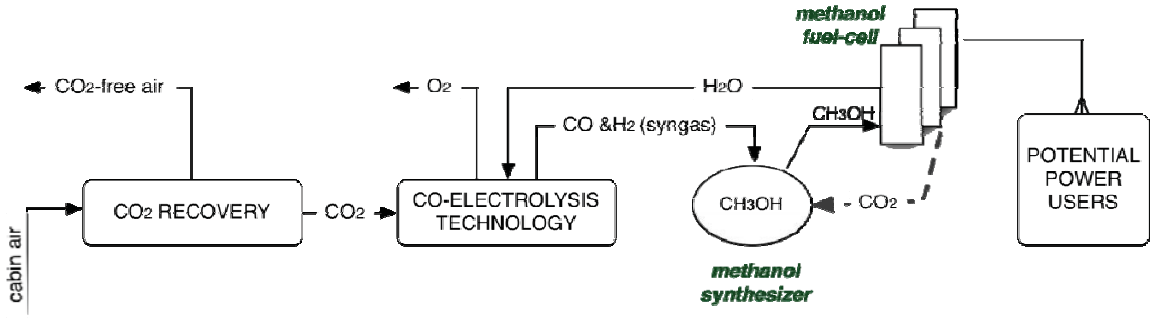

Figure 2 Proposed life support architecture with methanol formation

Syngas is a mixture of carbon monoxide (CO) and hydrogen (H_2). Loop closure can be maximized by converting syngas to storage-efficient liquid fuels, or by separating H_2 from CO for reuse. This investigation will compare these two approaches to syngas utilization with methanol as the target synthetic fuel. Methanol, H_2, and CO have fuel value and their products of combustion, CO_2 and water, can be captured and recycled to complete loop closure.

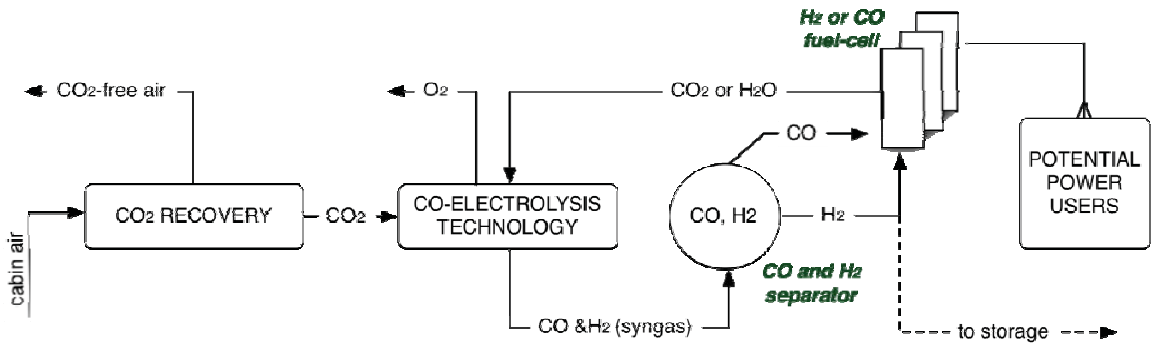

Figure 3 Proposed life support architecture with CO and H_2 separation

2. PROCESS MODELS

The process models for this mathematical analysis were developed using Honeywell's UniSim Design R390.1 (Build 15107) process modeling software. UniSim Design software inherently ensures mass and energy balances across all components and it includes thermodynamic data for all chemical species. The software realistically models components such as pumps, compressors, turbines, and heat exchangers. It also models chemical equilibrium reactions. The models described in this report were developed assuming steady state operation with chemical equilibrium reactions.

2.1 Co-Electrolysis Integrated Process Models

2.1.1 1-D Co-Electrolysis Model

Co-electrolysis is a process by which both steam and carbon dioxide may be electrolyzed in a high temperature ~800°C process using solid oxide electrolysis cells. A one-dimensional chemical equilibrium model has been developed for analysis of steam/carbon dioxide co-electrolysis. This model can be used to predict open-cell and operating potentials, electrolyzer outlet compositions, and outlet temperatures for specified inlet gas flow rates, current densities, cell area-specific resistance, and thermal boundary conditions.

The Nernst potential for the co-electrolysis system can be calculated as a function of temperature using the Nernst equation for either steam-hydrogen or for CO_2-CO, provided the equilibrium composition of the components is used in the evaluating the equation. Therefore, prior to applying the Nernst equation, the electrolyzer-inlet equilibrium composition must be determined at the operating temperature. The chemical equilibrium co-electrolysis model determines the equilibrium composition of the system as follows.

The overall water gas shift reaction that occurs during heat-up from the cold unmixed inlet conditions to the hot mixed pre-electrolyzer state can be represented as:

$$y_{0,CO}\,CO + y_{0,CO2}\,CO_2 + y_{0,H2}\,H_2 + y_{0,H2O}\,H_2O \rightarrow y_{1,CO}\,CO + y_{1,CO2}\,CO_2 + y_{1,H2}\,H_2 + y_{1,H2O}\,H_2O \quad (1)$$

where the $y_{0,j}$ values represent the cold inlet mole fractions of CO, CO_2, H_2, and H_2O, respectively, that are known from specification of the individual component inlet gas flow rates. The unknown equilibrium mole fractions of the four species at the electrolyzer temperature, prior to electrolysis, are represented by

the $y_{1,j}$ values. There are three governing chemical balance equations for carbon, hydrogen, and oxygen corresponding to Eqn. (1):

$$y_{0,CO} + y_{0,CO2} = y_{1,CO} + y_{1,CO2} \tag{2}$$

$$2y_{0,H2} + 2y_{0,H2O} = 2y_{1,H2} + 2y_{1,H2O} \tag{3}$$

$$y_{0,CO} + 2y_{0,CO2} + y_{0,H2O} = y_{1,CO} + 2y_{1,CO2} + y_{1,H2O} \tag{4}$$

The final equation invokes the equilibrium constant for the shift reaction:

$$K_{eq}(T) = \frac{y_{1,CO2}\, y_{1,H2}}{y_{1,CO}\, y_{1,H2O}} \tag{5}$$

completing a system of four equations and four unknowns. Simultaneous solution of this system of equations yields the hot inlet composition.

Once the hot inlet equilibrium composition is determined, the open-cell Nernst potential can be calculated from:

$$V_N = \frac{-\Delta G_{f,H_2O}(T)}{2F} - \frac{R_u T}{2F}\ln\left[\left(\frac{y_{1,H2O}}{y_{1,H2}\, y_{O2}^{1/2}}\right)\left(\frac{P}{P_{std}}\right)^{-1/2}\right] = \frac{-\Delta G_{f,CO_2}(T)}{2F} - \frac{R_u T}{2F}\ln\left[\left(\frac{y_{1,CO2}}{y_{1,CO}\, y_{O2}^{1/2}}\right)\left(\frac{P}{P_{std}}\right)^{-1/2}\right] \tag{6}$$

where y_{O2} is the mole fraction of oxygen on the air-sweep side of the cells ($y_{O2} \sim 0.21$). Note that the Nernst equation for either steam-hydrogen or CO_2-CO yields the same result for the equilibrium system. The electrolyzer outlet composition can be determined similarly, after accounting for electrochemical reduction of the system. The chemical balance equation for oxygen must be modified to account for oxygen removal from the CO_2/steam mixture. Accordingly, the oxygen balance equation becomes:

$$y_{1,CO} + 2y_{1,CO2} + y_{1,H2O} = y_{2,CO} + 2y_{2,CO2} + y_{2,H2O} + \Delta n_O \tag{7}$$

where Δn_O is the relative molar rate of monatomic oxygen removal from the CO_2/steam mixture given by:

$$\Delta n_O = \frac{I_e}{2F\dot{N}_{Tot}} \tag{8}$$

In this equation, I_e is the total ionic current, $I_e = i \cdot A_{cell} \cdot N_{cells}$, $\dot{N}_{Tot}$ is the total molar flow rate on the CO_2/steam side, including any inert gas flows, and F is the Faraday number. Finally, using the modified oxygen balance equation, the post-electrolyzer equilibrium composition (state 2) can be determined as a function of temperature from simultaneous solution of three chemical balance equations and the equilibrium constant equation.

In general, the electrolyzer outlet temperature is unknown. The magnitude of any temperature change associated with electrolyzer operation depends both on the operating conditions (operating voltage, inlet composition, gas flow rates, etc.) and on the thermal boundary condition. If the electrolyzer operating voltage is below the thermal neutral voltage, the endothermic reaction heat requirement dominates and the

stack will tend to cool off. If the operating voltage is above thermal neutral, ohmic heating dominates and the stack tends to heat up.

If adiabatic electrolyzer operation is assumed, the outlet temperature can be determined as a function of operating voltage from simultaneous solution of the energy equation and the chemical balance and equilibrium constant equations. Alternately, if isothermal operation is assumed, the outlet composition can be determined independently of the energy equation and the heat required to maintain isothermal operation can be calculated as a function of operating voltage.

For pure-steam or pure-CO_2 electrolysis, the thermal neutral voltage is given by

$$V_{tn,j}(T) = \frac{\Delta H_{R,j}(T)}{2F} \tag{9}$$

where $\Delta H_{R,,j}(T)$ is the enthalpy of reaction for electrolysis of pure component j (H_2O or CO_2) at temperature T. At 800°C, $V_{tn,H2O}$ = 1.29 V and $V_{tn,CO2}$ = 1.46 V. For co-electrolysis, the thermal neutral voltage can range anywhere between the respective pure-component values, depending on inlet composition, oxygen utilization, and temperature (via the equilibrium constant, $K_{eq}(T)$). There is no simple explicit relation for the multi-component thermal neutral voltage. In general, the thermal neutral voltage for co-electrolysis will be closer to the pure-steam value if the inlet composition is dominated by steam and hydrogen. Conversely, if the inlet composition is dominated by CO_2 and CO, the co-electrolysis thermal neutral voltage will be closer to the pure-CO_2 value. At an operating temperature of 800°C, with syngas-production-relevant inlet compositions for co-electrolysis (i.e., ~2-to-1 steam/hydrogen vs CO_2), a thermal neutral voltage value of ~1.34 V is typical. The energy equation for the co-electrolysis process can be written as:

$$\dot{Q} - \dot{W} = \sum_P \dot{N}_i[\Delta H^o_{f_i} + H_i(T_P) - H^o_i] - \sum_R \dot{N}_i[\Delta H^o_{f_i} + H_i(T_R) - H^o_i] \tag{10}$$

where $\dot{Q}$ is the external heat transfer rate to or from the electrolyzer, $\dot{W}$ is the rate of electrical work supplied to the electrolyzer, $\dot{N}_i$ is the molar flow rate of each reactant or product, $\Delta H^o_{f_i}$ is the standard-state enthalpy of formation of each reactant or product and $H_i(T) - H^o_i$ is the sensible enthalpy for each reactant or product. Applying the energy equation in this form, all reacting and non-reacting species in the inlet and outlet streams are accounted for, including inert gases, process steam, hydrogen (introduced to maintain reducing conditions on the steam/hydrogen electrode), CO_2, and any excess unreacted process gases.

In general, determination of the outlet temperature from Eqn. (10) is an iterative process. The heat transferred during the process must first be specified (e.g., zero for the adiabatic case). The temperature-dependent enthalpy values of all species must be available from curve fits or some other database. The cathode-side hot electrolyzer-inlet molar composition and flow rates of steam, hydrogen, CO_2, CO, and any inert carrier gases such as nitrogen (if applicable) have already been determined from specification of the cold inlet flow rates of all components and from Eqns. (2 – 6). The inlet flow rate of the sweep gas (e.g., air or steam) on the anode side must also be specified. At this point, the total electrolyzer-inlet enthalpy given by the second summation on the right-hand side of Eqn. (10) can be evaluated.

The current density, active cell area, and number of cells are then specified, yielding the total ionic current, I_e. Care must be taken to insure that the specified inlet gas flow rates and total ionic current are compatible. The minimum required inlet steam and CO_2 molar flow rates must satisfy the following constraint:

$$\dot{N}_{H_2O} + \dot{N}_{CO_2} \geq \frac{I_e}{2F} \tag{11}$$

to avoid oxygen starvation. Note that the oxygen contribution from the CO_2 is only counted once, since we want to avoid creation of carbon soot, which could foul the cells.

Evaluation of the electrolyzer-outlet total enthalpy, the first summation in Eqn. (10), requires the product temperature, but the product temperature is generally unknown and is determined from solution of the energy equation, so an iterative solution must be applied. The iterative solution process proceeds as follows. Based on a guessed value of electrolyzer outlet temperature, T_P, and the specified current, the electrolyzer outlet composition can be determined as described previously, allowing for evaluation of the total enthalpy of the products.

The remaining term in the energy equation is the electrical work, which is the product of the per-cell operating voltage and the total ionic current. The operating voltage corresponding to the specified current density is obtained from:

$$V_{op} = \overline{V}_N + i \times ASR(T) \tag{12}$$

The stack area-specific resistance, *ASR(T)*, quantifies the loss mechanisms in the operating cell. It must be estimated, based on experimental data or an appropriate model, and specified as a function of temperature. The operating-cell mean Nernst potential, $\overline{V}_N$, accounting for the variation of gas composition and temperature across the operating cell, can be obtained from an integrated form of the steam-hydrogen-based (or the CO_2-CO-based) Nernst equation:

$$\overline{V}_N(T_P) = \frac{1}{2F(T_P - T_R)(y_{2,O_2} - y_{1,O_2})[y_{2,H_2}(T_P) - y_{1,H_2}]} \times \int_{T_R}^{T_P} \int_{y_{1,O2}}^{y_{2,O2}} \int_{y_{1,H2}}^{y_{2,H2}(T_P)} \Delta G_{R,H_2O}(T) + R_u T \ln\left(\frac{1 - y_{H_2} - y_{0,CO_2} - y_{N_2}}{y_{H_2} y_{O_2}^{1/2}}\right) dy_{H_2} dy_{O_2} dT \tag{13}$$

Note that the variable in this equation is the unknown product temperature, T_P, which appears both explicitly and implicitly in the upper integration limits. The steam mole fraction has been expressed in the integrand numerator in terms of the hydrogen mole fraction. The mole-fraction subscripts 0, 1, 2 again refer to the cold inlet, hot electrolyzer inlet, and the hot electrolyzer outlet states, respectively. Mole fractions at states 0 and 1 are fully defined. The state-2 mole fractions are based on the specified current density and the guessed value for T_P.

Once the mean Nernst potential is evaluated based on a guessed value for T_P, the operating voltage can be determined and the energy equation can be evaluated. The final converged solution for T_P must simultaneously satisfy the chemical balance Eqns. (2, 3, 7), the equilibrium constant Eqn. (2), and the energy Eqn. (10), subject to Eqns. (12 – 13).

The solution methodology described above can be applied to any specified electrolyzer heat loss or gain. For adiabatic operation, $Q = 0$. Alternately, if the heat loss or gain from the operating electrolyzer is known from a separate heat transfer analysis for a given operating point, the value of that heat loss or gain would be used.

For isothermal electrolyzer operation, once the inlet flow rates, current density, and operating temperature are specified, an iterative solution is not necessary and the triple integral of Eqn. (13) reduces to a double integral with known upper limits of integration. The energy Eqn. (10) can be solved directly for the heat required to maintain isothermal operation at any operating point.

The model allows for accurate determination of co-electrolysis outlet temperature, composition (anode and cathode sides), mean Nernst potential, operating voltage and electrolyzer power based on specified inlet gas flow rates, heat loss or gain, current density, and cell *ASR(T)*. Alternately, for isothermal operation, it allows for determination of outlet composition, mean Nernst potential, operating voltage, electrolyzer power, and the isothermal heat requirement for specified inlet gas flow rates, operating temperature, current density and *ASR(T)*.

2.1.2 Implementation of Co-Electrolysis Model into UniSim

Implementation of the model in UniSim was done in a way that took advantage of as many built-in features of the systems-analysis code as possible. Figure 4 provides a process flow diagram (PFD) representing the implementation of the model in UniSim. The user-specified cold inlet process-gas stream enters at the left. This stream is equilibrated at the desired electrolyzer inlet temperature by means of an equilibrium reactor module that supports the shift reaction, Eqn. (14).

$$CO_2 + H_2 \leftrightarrow CO + H_2O \qquad \text{(4.2e+4 kJ/kgmole)} \qquad (14)$$

The hot shifted stream and the heated sweep-gas stream enter the electrolysis module. This electrolysis module was developed previously for pure steam electrolysis. At this level of the model, the user may specify whether the electrolysis process will be isothermal or adiabatic. If the process is isothermal, the temperature of the process outlet stream must be specified, otherwise, the outlet temperature is determined by iteration using an embedded adjust logical (shown as the A within the diamond) until the process heat is zero. Also at this level, an embedded spreadsheet is used to input the electrolysis variables, (i.e. current density, number of cells, cell area, area specific resistance, etc.).

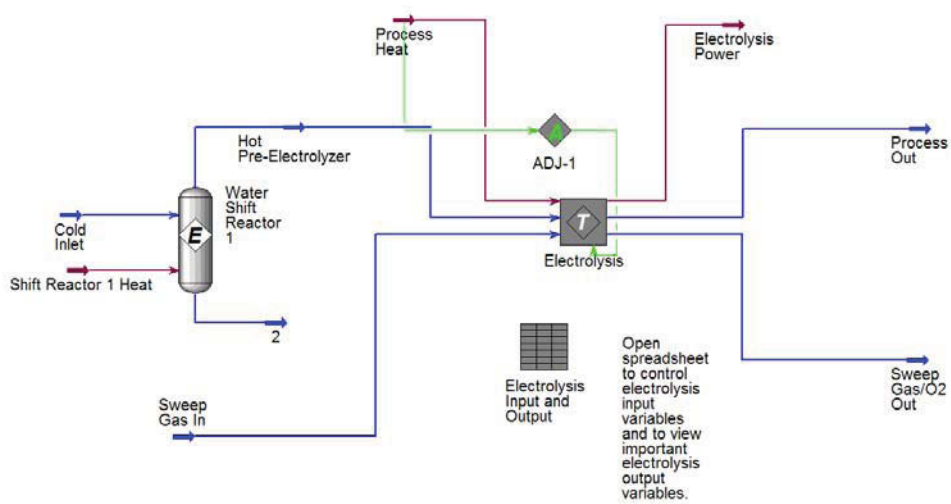

Figure 4 Process flow diagram external to the electrolysis module

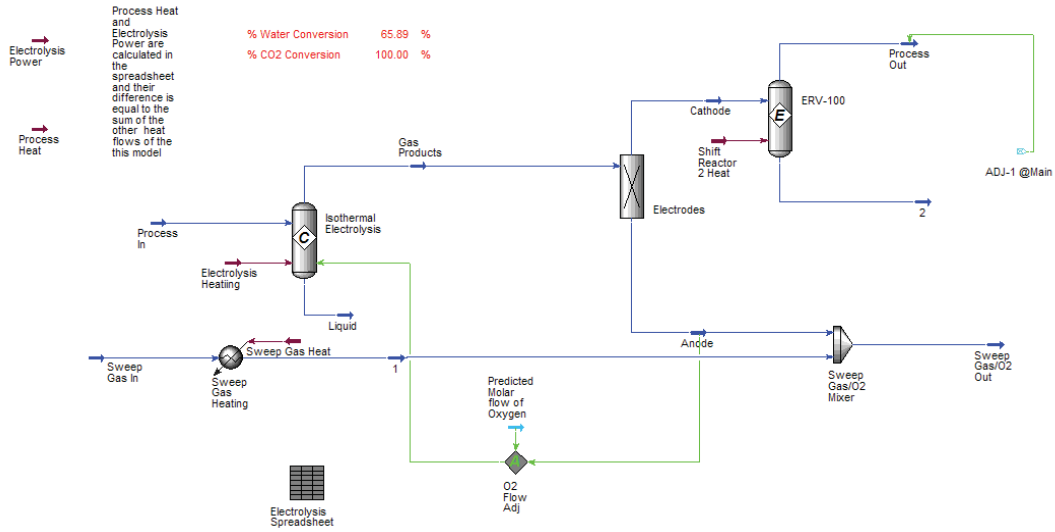

Figure 5 Process flow diagram of electrolysis module

The process flow diagram for the electrolysis module is shown in Figure 5. The hot shifted process stream enters a conversion reactor where the steam and/or carbon dioxide are electrolytically reduced. The conversion reactor unit includes both the steam and carbon dioxide reduction reactions. Based on the percent conversion of the steam and CO_2, the reactor will calculate the heat of reaction. The percent conversion of steam and/or CO_2 is determined by the amount of oxygen generated using Eqn. (8). This value of the molar flow rate of produced oxygen is stored in a dummy stream. A logical adjust is used to change the percent conversion of steam and carbon dioxide until the oxygen molar flow rate leaving the conversion reactor is the same as the calculated value. The oxygen is split from the rest of the reacted process-gas components by means of a component splitter unit (labeled Electrodes). The split oxygen combines with the sweep gas. The remaining components are passed through a second shift reactor to determine the outlet equilibrium composition.

As previously mentioned, the outlet temperature of both the process and sweep streams are specified but allowed to adjust if adiabatic conditions are desired. An embedded spreadsheet is used to evaluate the mean Nernst potential, Eqn. (13). Assuming a functional relationship for the Gibbs energy of formation, the definite integral was simplified analytically and this simplified version was programmed into the spreadsheet. The UniSim calculation proceeds as follows: having defined the electrolysis variables, the amount of oxygen production is calculated in the spreadsheet using Eqn. (8). Based on an assumed outlet temperature, UniSim proceeds to calculate all the thermodynamics and chemical reactions of the process resulting in outlet compositions for the process and sweep streams. With these now defined, the spreadsheet can calculate the mean Nernst potential by evaluating the simplified triple integral, Eqn. (13). The operating voltage is obtained from Eqn. (12) and the electrolysis power is calculated by multiplying the operating voltage with the total current. UniSim inherently assures that the energy balance, Eqn. (10) is satisfied, which allows the process heat to be calculated by summing the electrolysis power with the total enthalpy differences from the electrolysis process and from the second shift reactor. If the outlet temperature is specified to be the same as the inlet temperature (isothermal operation), the calculation is complete and the process heat is known. If the process is specified to be adiabatic, the outlet temperature is adjusted until the process heat is zero. The process flow sheet automatically assures mass and energy balances.

2.2 Methanol Process with Co-electrolysis

The co-electrolysis process was used to create syngas which then was used as feedstock into a methanol production process. The process flow diagram of the combined processes is shown in Figure 6. Water and carbon dioxide are mixed with recycled syngas and heated to 800°C though heat recuperation and direct heating. The direct heating in this analysis is assumed to be from electric heaters. At co-electrolysis temperatures ~ 800°C, the stream composition will shift according to the reverse water gas shift reaction, Eq. (14). As discussed in the previous section, the water and carbon dioxide are electrolyzed to produce hydrogen and carbon monoxide on the cathode side of the electrodes and oxygen on the anode side. Both hot product streams are cooled using the recuperating heat exchangers. A portion of the syngas produced is mixed with the incoming water and carbon dioxide to create reducing conditions at the electrolysis electrodes. Most of the water in the sygas is removed and recycled using a water knock out tank. The co-electrolysis process is running at near atmospheric conditions, ~ 20 psia. The syngas must be compressed to methanol process pressures of ~1000 psia by way of a multistage compressor with intercooling. Recycle gas from the methanol process, primarily hydrogen, combines with the incoming syngas and is further compressed. The syngas is heated using another recuperating heat exchanger within the methanol process. The methanol process is modeled using two different types of chemical reactors. The first reactor is an chemical equilibrium reactor where the reverse water gas shift reaction, Eq. (14), and the methanol reaction occur, Eq. (15).

$$CO_2 + 3H_2 \leftrightarrow CH_3OH + H_2O \qquad \text{(-4.1e+4 kJ/kgmole)} \qquad (15)$$

The reactions occur at 227°C and 1024 psia. The reactions are exothermic and some heat is released. This heat may be used in preheating the incoming water and carbon dioxide just before the co-electrolysis process. The process also produces some dimethyl ether and propanol as by products by way of a stoichiometric conversion reactor using equations 16 and 17.

$$2CH_3OH \rightarrow C_2H_5OH + H_2O \qquad \text{(-1.2e+4 kJ/kgmole)} \qquad (16)$$

$$3CH_3OH \rightarrow C_3H_7OH + 2H_2O \qquad \text{(-4.5e+4 kJ/kgmole)} \qquad (17)$$

With each reaction only 5% of the methanol is converted resulting in low concentrations in the exiting stream. The stream passes through a condenser to separate the water and methanol from the hydrogen, carbon monoxide and carbon dioxide. Two distillation columns are used to purify the methanol to 99%. Combustion processes close the loop in which both the methanol and the light gases are combusted. The methanol combustion process is a rough simulation of the fuel cell process.

For methanol production, stoichiometric ratios are used to gauge the suitability of the feed gas for methanol production. A few different metrics can be used. The first metric is the molar ratio:

$$(H_2 - CO_2) \big/ (CO + CO_2) \qquad (18)$$

Literature indicates that the optimal value for this metric for methanol synthesis is around 2, [English]. Many technology providers prefer to run slightly higher than 2. A target value for this analysis of 2.1 was selected, [Haldor Topsoe].

The second metric is the molar ratio:

$$H_2/(2CO + 3CO_2) \tag{19}$$

Literature indicates that the optimal value for this metric for methanol synthesis is 1.05, [Bartholomew]. It is also useful to know the molar syngas ratio, H_2/CO, of the inlet gas. All of these metrics are for the feed gas to the methanol synthesis loop, not the methanol reactor itself. Studies have shown that conversion in the reactor is enhanced by having some CO_2 present at the reactor inlet. However, if too much CO_2 is present, conversion will be hindered. An upper limit of 4 mol.% is presented in the literature to maintain good conversion, [Bartholomew]. There are many different reactor configurations and feeds used for methanol synthesis.

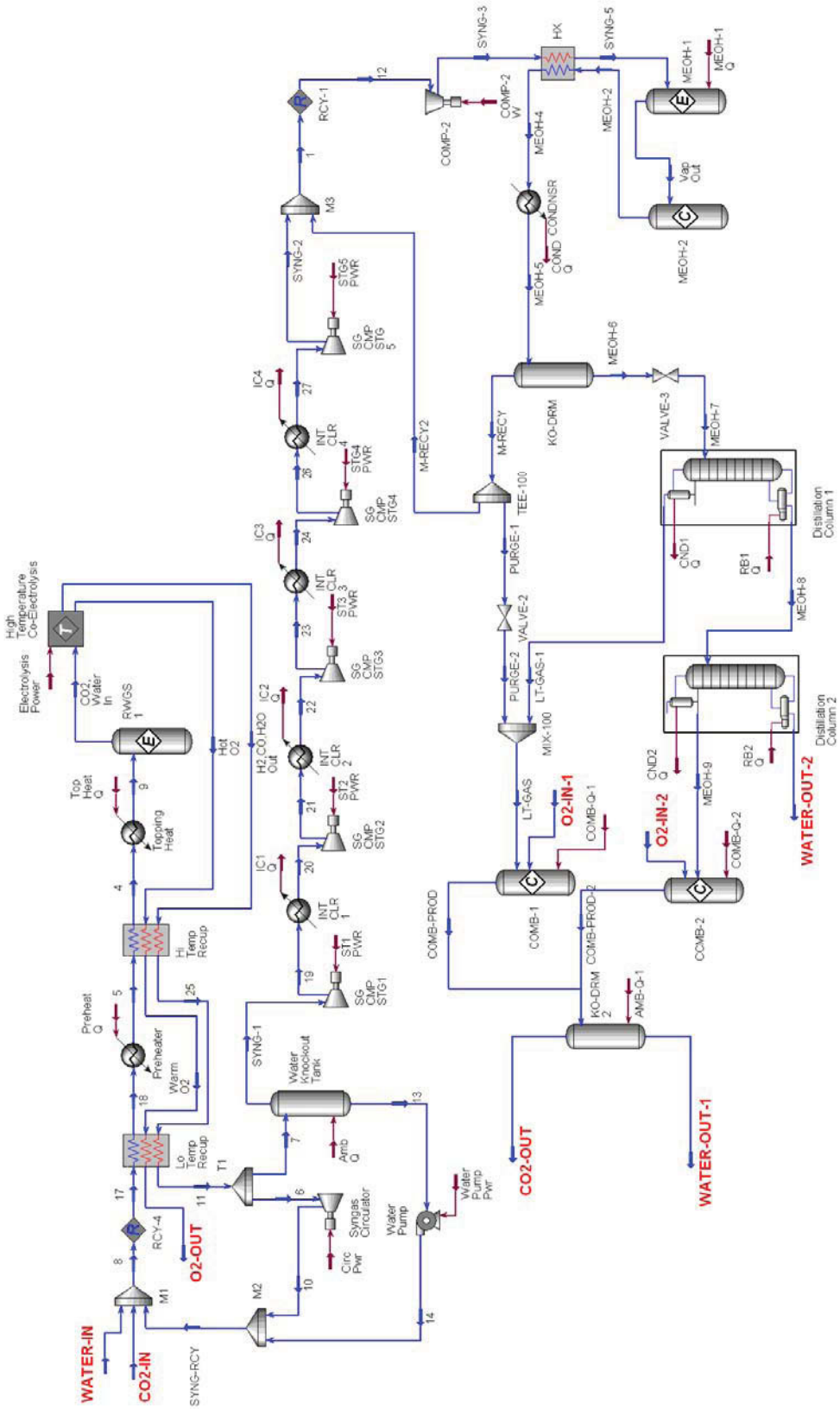

Figure 6 Process flow diagram of Methanol process with co-electrolysis

2.3 Co-electrolysis with Pressure Swing Adsorption

The process model of the co-electrolysis process with pressure swing adsorption is very similar to the previous process except a pressure swing adsorption (PSA) unit replaced the methanol production process. The model for the PSA unit is a very simplified model which uses a splitter block to separate the gases in the PSA unit. PSA is a transient process which relies on the kinetics of the adsorption process. The process model is a steady state model therefore some simplifying assumptions were used to develop a black box type of model. Based on literature about PSA units, the pressure ratio of the inlet stream to the purge gas is typically 4 or greater, [Burr, Kohl, Kuchta]. Therefore, the pressure into the PSA unit was set to 100 psia. Based on this pressure ratio, 85% of the incoming hydrogen exits as part of the hydrogen stream with 0.03% of the incoming carbon monoxide, and 0.003% of the incoming carbon dioxide. The remaining gas exits the splitter block in the purge gas stream. Based on the literature, the power needed to run the PSA process is given by the following function:

Power (kW) = 0.0009858 * Inlet Molar Flow Rate (lbmole/hr), [Kuchta].

The outlet temperature of the hydrogen stream is adjusted until the PSA process is adiabatic, ("PSA heat" stream equals zero). As with the previous model, the purge gas and hydrogen stream are combusted.

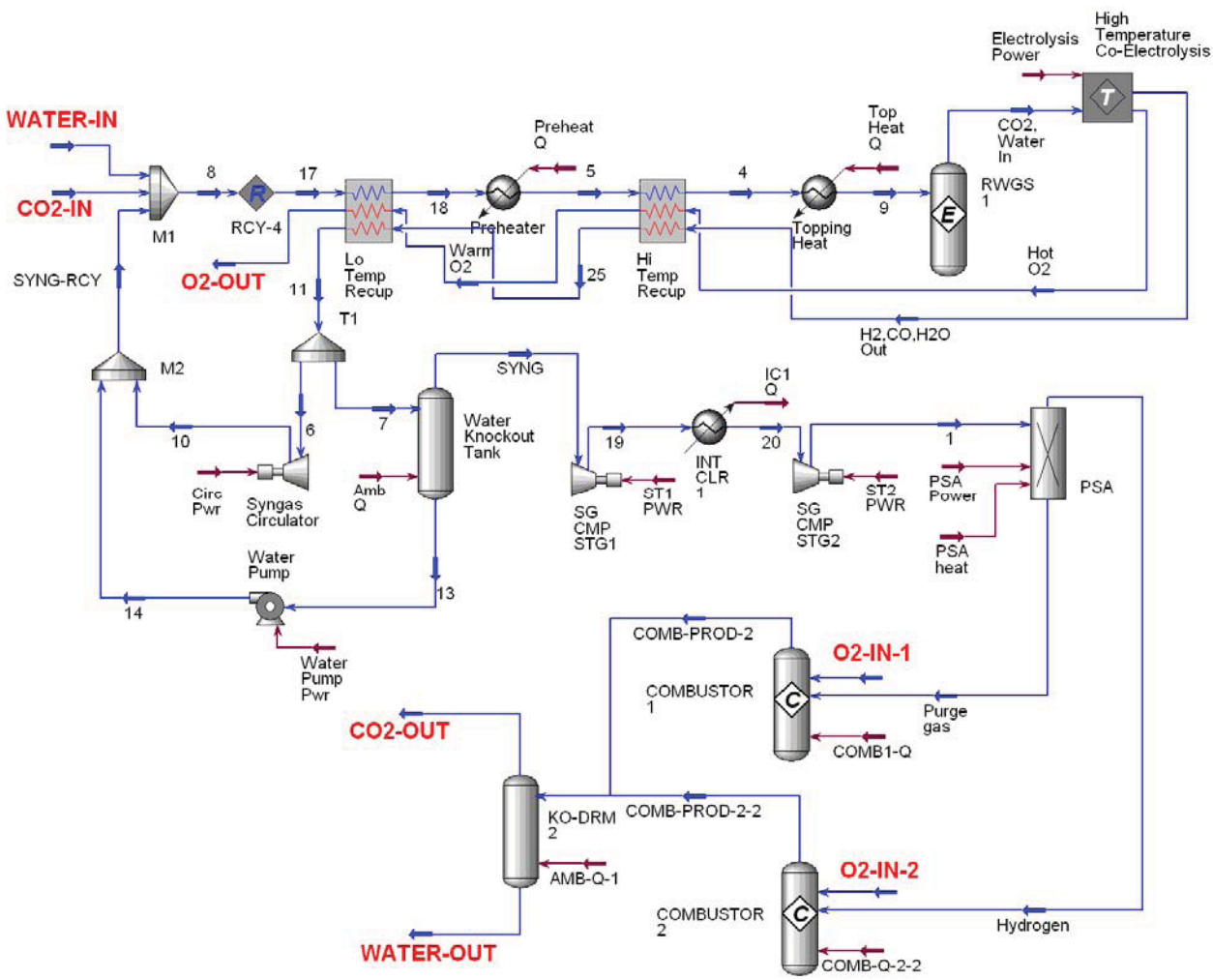

Figure 7 Process flow diagram of co-electrolysis with pressure swing adsorption

3. RESULTS

The scale of the process models was set to 1 kg/day of carbon dioxide processed to allow for comparison. Figure 8 compares the power output needed to process the carbon dioxide for both the methanol and pressure swing adsorption (PSA) separation processes as a function of the syngas ratio. The power needed for both cases is close. Both cases require more power as the ratio of the hydrogen increases because more input water is needed to supply the hydrogen while the flow rate of the incoming carbon dioxide is constant. The power requirement for the methanol case is slightly less because heat from the methanol reactor is used to raise the temperature of the water and carbon dioxide streams entering the co-electrolysis process where no process heat is available for the PSA cases. The methanol production case is slightly non-linear due to the amount of process heat available for the incoming streams. For the cases where the syngas ratios are 2 and 2.5, there is sufficient heat supplied to the preheater. At higher syngas ratios, some additional electric heat is needed at the preheater.

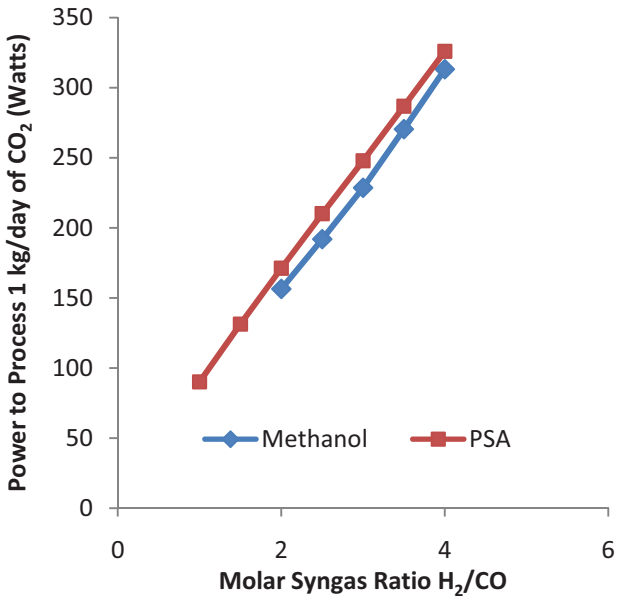

Figure 8 Comparison of power required to process 1kg/day of CO_2 between methanol synthesis and PSA separation

The specific power can be defined as the power needed to process 1 kg/day of CO_2 divided by the feed water flow rate. The specific power is a measure of the power needed per inlet water flow and can be a measure of the effective use of water to process the CO_2. As the syngas ratio increases, the specific power for both processes decreases, see Figure 9. At higher syngas ratios, the curves approach each other and level out indicating that although the power usage per feed water flow may decrease, the addition of feed water does not significantly change the specific power.

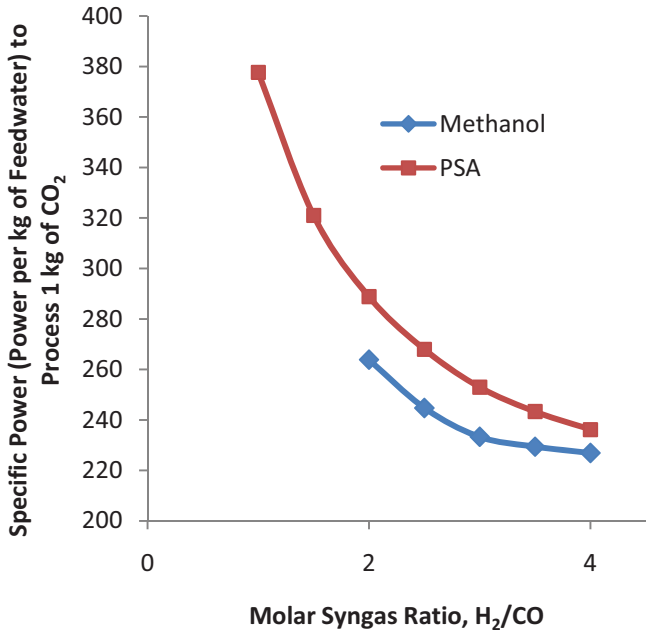

Figure 9 Specific power to process 1 kg of CO_2 as a function of the syngas ratio

Figure 10 shows a mass balance of the co-electrolysis combined with the methanol production process. The figure shows that the water, oxygen, and carbon dioxide inlets and outlets are almost the same. The differences are due to trace amounts of propanol, Di-methyl-ether, and methanol. As expected, as the syngas ratio increases the mass flow of the water must increase to provide the necessary hydrogen resulting in more oxygen as well. Figure 11 is the mass balance of the co-electrolysis process with pressure swing adsorption, PSA. Comparing the co-electrolysis with methanol production against co-electrolysis with PSA separation, the co-electrolysis processes are identical by design. The PSA separation process simply separates the products of the syngas and then combusts them completely. Therefore no complex hydrocarbons are formed and the inlet water, oxygen and carbon dioxide flow rates are identical to the outlet flow as shown in Figure 11.

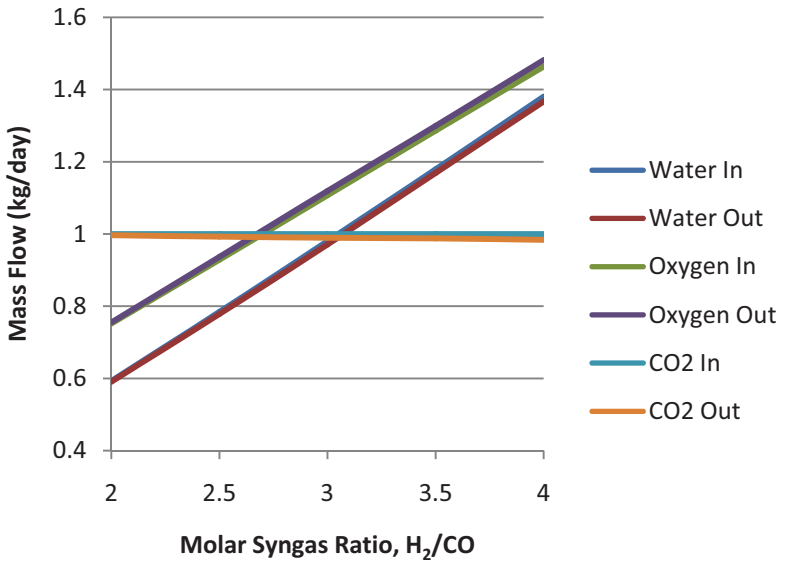

Figure 10 Mass balance of co-electrolysis combined with methanol production

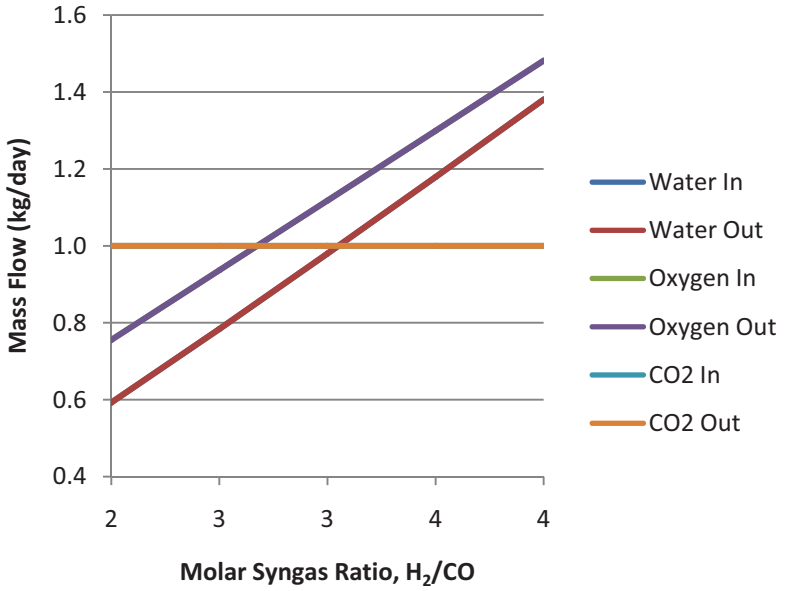

Figure 11 Mass balance of co-electrolysis combined with PSA separation

Figure 12 shows the inlet mass flow rates of water and carbon dioxide, compared to the methanol production, water from the distillation columns, light gas, and oxygen production flow rates. The methanol production and water from the distillation columns flow rates level out at a syngas ratio of 3. The light gas flow rate decreases. The methanol purity varies between 99 to 100% mole with water as the other component. The distilled water varies between 95 to 97% mole with methanol as the other component. The purity of both is more dependent on column conditions than methanol reactor chemistry and syngas ratio. However the light gas composition is a function of syngas ratio as shown in Figure 13.

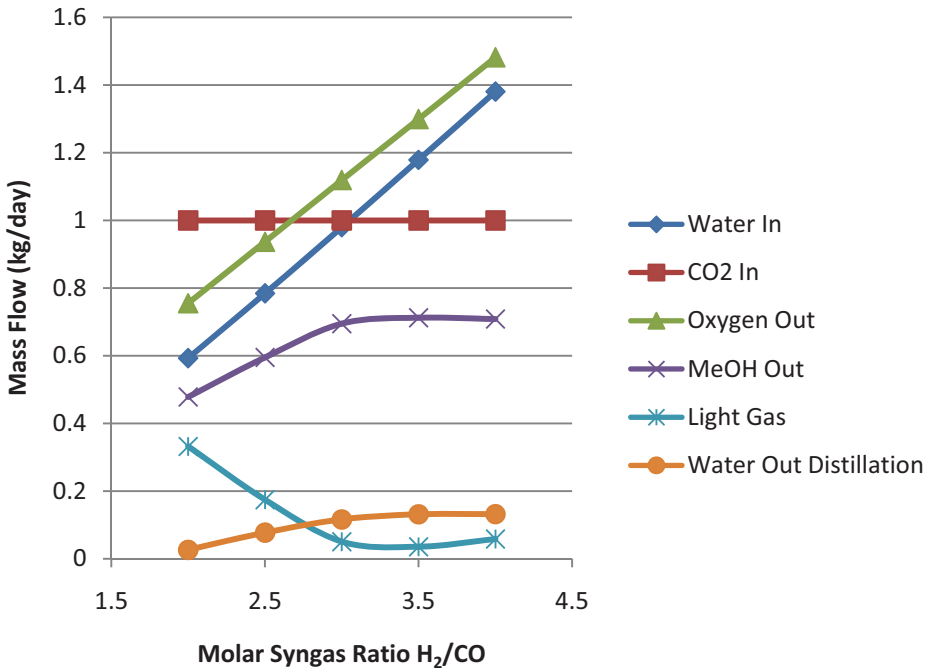

Figure 12 Comparison of methanol, light gas, distilled water, and oxygen flow with inlet flows.

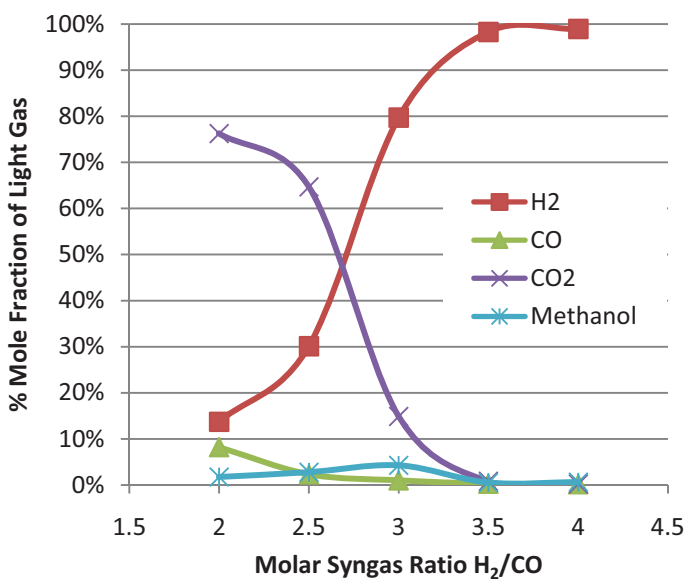

Figure 13 Light gas composition as a function of syngas ratio.

As the syngas ratio increase, the composition of the light gas shifts from carbon dioxide to hydrogen due to the increased amount of hydrogen produced. More of the carbon is made into liquid methanol as opposed to carbon dioxide as the syngas ratio is increased. Figure 14 shows the performance ratios and % carbon dioxide content for the various syngas ratios and compares them to the optimal performance conditions. At a syngas ratio of around 3, the metrics are met and the ideal carbon dioxide condition is nearly obtained.

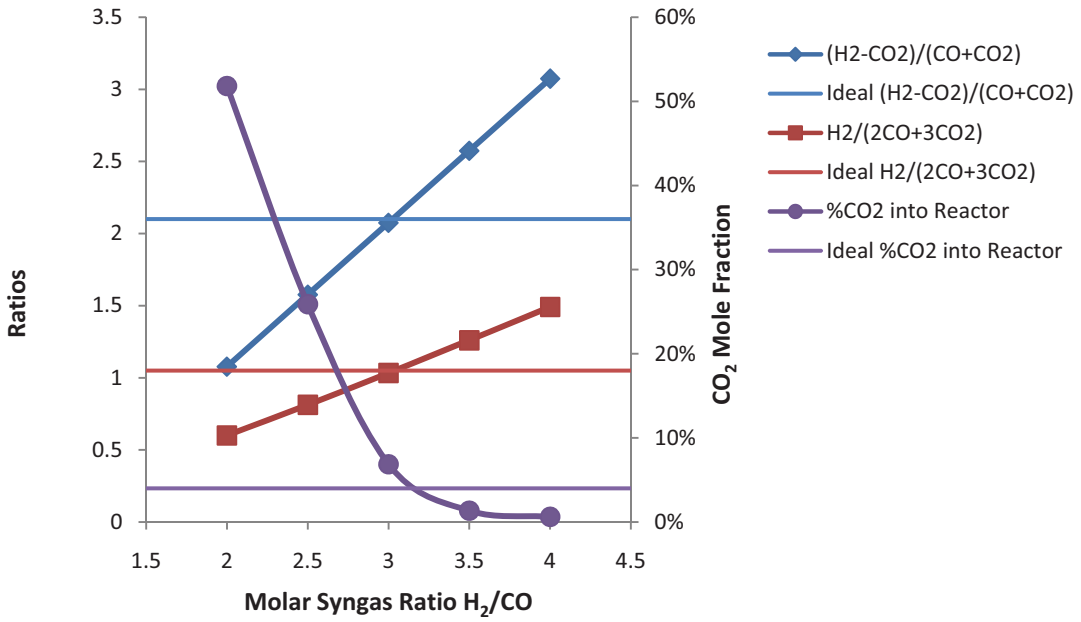

Figure 14 Performance ratios and carbon dioxide fraction for methanol production as a function of the syngas ratio

For the PSA cases, the mass flow rates of hydrogen production, purge gas, and oxygen production are compared to the inlet carbon dioxide and water flow rates, see Figure 15. As the syngas ratio increases, the hydrogen production rate increases and the purge gas flow rate decreases. Figure 16 and Figure 17 show the compositions of the hydrogen and purge gas streams. The hydrogen stream increases from a purity of 99.9 to 99.99% as the syngas ratio increases. Both the carbon dioxide and carbon monoxide content decrease as this ratio increases because there is increased hydrogen (as water) entering the co-electrolysis process. The carbon dioxide composition of the purge gas decreases rapidly and then begins to level out, as the syngas ratio increases. The carbon monoxide composition increases until the ratio is 2 and then decreases as the ratio increases.

The water content of the purge gas increases linearly, as the ratio increases. The hydrogen composition also increases linearly but at a higher rate. As the hydrogen increases, more of the carbon dioxide is shifted to carbon monoxide due to the water gas shift reaction. However, the hydrogen increases at a faster rate than the carbon dioxide resulting in a higher composition of hydrogen and a decrease in carbon monoxide as the ratio increases 2.

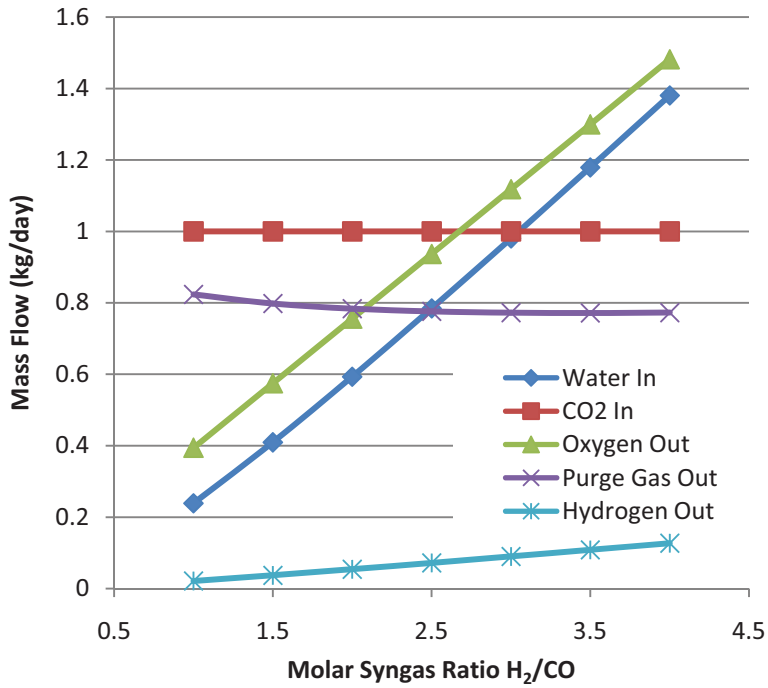

Figure 15 Mass flows of purge gas, hydrogen and oxygen flow rates compared to inlet water and carbon dioxide flow rates

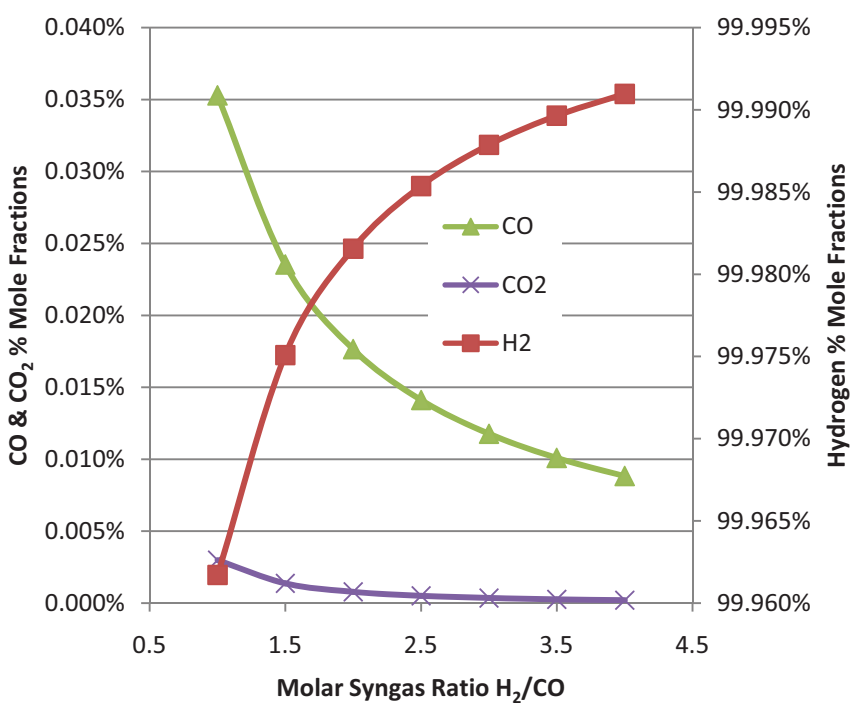

Figure 16 Composition of hydrogen stream as a function of syngas ratio

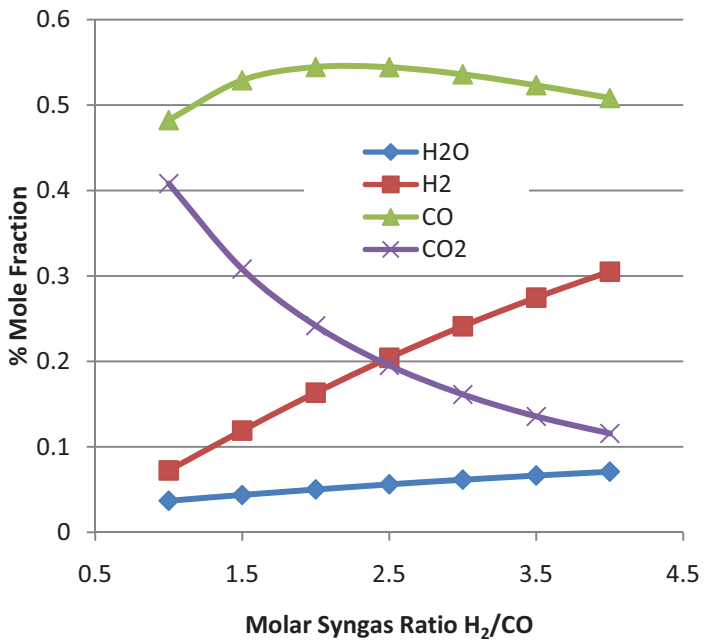

Figure 17 Composition of purge gas stream as a function of syngas ratio

4. Conclusions and Recommendations

A comparison was made between two processes for fuel production and combustion which used the syngas product from the co-electrolysis of water and carbon dioxide. In the first process liquid methanol is produced for storage and/or combustion; in the second process hydrogen is separated from syngas and the components are then combusted separately. Power and products were plotted vs. the molar ratio of H_2/CO in the syngas. The following conclusions are drawn:

- The power required to make methanol is less than the power required to separate the syngas, over all syngas H_2/CO ratios evaluated, because process heat from methanol production may be used to reduce the power required to heat up the gases feeding the co-electrolysis process.
- If fuels were to be stored for any length of time prior to combustion, pressurization of the separated gases would be necessary, accentuating the advantage of liquid fuel production/storage. Hydrogen gas from the PSA separation process would need to be further compressed to much higher pressures for storage, where no compression is necessary for the liquid methanol fuel.
- Methanol production is optimal at a syngas ratio of 3. This corresponds to an input H_2O/CO_2 ratio of 0.98:1 or a molar ratio of 2.4:1. Humans respire/release H_2O and CO_2 in a molar ratio from about 5:1 - 6:1, providing ample water for the syngas ratios evaluated here (up to 4:1). The oxygen output from co-electrolysis can be extracted for human use (but would need to be separated from the purge) or used for combustion.
- At higher syngas ratios (higher water input), the hydrogen product from pressure swing adsorption increases and becomes purer, and the purge gas flow and carbon dioxide content

decrease. Specific power (power per kg water feed, with constant 1 kg CO_2 feed) for the two models decreases as syngas ratio increases.

- The methanol production process introduces a small amount of light hydrocarbons, propanol and Di-methyl-Ether, in the combustion product CO_2 stream. The effect of these contaminants on the co-electrolysis system is unknown. If returned to the space cabin, the trace contaminant control system would have to remove them.
-

The following recommendations should be considered:

- With co-electrolysis, it is theoretically possible to revitalize the atmosphere of a space cabin and recover oxygen for human metabolic use, simultaneously providing fuel/energy for transportation or other crew needs. Additional oxygen is needed to burn the fuel. If the combustion products can be captured and used for fuel production again, power/fuel needs can be nearly self-sustaining.
- From a power perspective, methanol production is preferable to separation of syngas. Optimal production of methanol should be at a syngas ratio of 3.
- The co-electrolysis process produces the desired syngas ratio if fed the appropriate ratio of H_2O/CO_2. The desired syngas ratio can be easily obtained using co-electrolysis by adjusting the inlet flows of CO_2 and H_2O.
- From a purity perspective, separation of gases is preferable to methanol production. In the separation scenario, feed with higher water content produces higher purity hydrogen.

5. REFERENCES

Bartholomew, C. H., R. J. Farrauto, 2006, "Methanol Synthesis," *Fundamentals of Industrial Catalytic Processes*, 2nd Ed., John Wiley & Sons.

Burr, Barry, Lili Lyddon, Bryan Research and Engineering, "A Comparison of Physical Solvents for Acid Gas Removal", 2008.

English, Alan, Jerry Rovner, John Brown, and Simon Davies, 2005, "Methanol," *Kirk-Othmer Encyclopedia of Chemical Technology*, Volume 16, John Wiley & Sons.

Haldor Topsoe, 2009, "Large Scale Methanol Production from Natural Gas," Product Brochure. http://www.topsoe.com/business_areas/methanol/~/media/PDF%20files/Methanol/Topsoe_large_scale_methanol_prod_paper.ashx

Kohl, Arthur, Richard Nielsen, 1997, "Hydrogen Purification by Pressure Swing Adsorption (PSA)", *Gas Purification*, Gulf Publishing Company, Houston, Texas.

Kuchta, Eugene, UOP Polybed PSA Unit quote to Mike Friedrich of Aker Kvaerner, July 9, 2003, UOP Proposal P3H038 Rev.4 based on report "Commercialization of the Hymelt Gasification Process for Illinois Coal".

Appendix A

Raw Process Model Data

Appendix A
Raw Process Model Data

The models of the processes in Appendix A were developed using UniSim Design Version UniSim Design R390.1 (Build 15107) from Honeywell on a desktop computer running Microsoft Windows XP Professional Version 2002 Service Pack 3.

Workbook: Case (Main)

Streams

Fluid Pkg: All

Name		SYNG-2	M-RECY2	1	SYNG-3	SYNG-5
Vapour Fraction		1.0000	1.0000	0.9991	1.0000	1.0000
Temperature	(C)	163.5	68.00	83.57	91.20	216.7 *
Pressure	(kPa)	7501 *	6977	6977	7515 *	7460
Molar Flow	(gmole/h)	2.318	7.649	9.967	9.967	9.967
Mass Flow	(kg/d)	0.8377	6.021	6.859	6.858	6.858
Std Ideal Liq Vol Flow	(m3/h)	7.742e-005	3.482e-004	4.256e-004	4.256e-004	4.256e-004
Heat Flow	(kW)	-5.341e-002	-0.5737	-0.6271	-0.6263	-0.6124
Molar Enthalpy	(kJ/kgmole)	-8.294e+004	-2.700e+005	-2.265e+005	-2.262e+005	-2.212e+005
Name		MEOH-2	MEOH-4	Vap Out	2	3
Vapour Fraction		1.0000	0.9823	1.0000	0.0000	0.0000
Temperature	(C)	226.7	109.5	226.7 *	226.7	226.7
Pressure	(kPa)	7060	7005	7060	7060	7060
Molar Flow	(gmole/h)	8.711	8.711	8.711	0.0000	0.0000
Mass Flow	(kg/d)	6.858	6.858	6.858	0.0000	0.0000
Std Ideal Liq Vol Flow	(m3/h)	3.925e-004	3.925e-004	3.925e-004	0.0000	0.0000
Heat Flow	(kW)	-0.6290	-0.6429	-0.6290	0.0000	0.0000
Molar Enthalpy	(kJ/kgmole)	-2.599e+005	-2.657e+005	-2.599e+005	-2.600e+005	-2.600e+005
Name		MEOH-6	MEOH-5	MEOH-7	MEOH-8	LT-GAS-1
Vapour Fraction		0.0000	0.9053	0.1977	0.0000	1.0000
Temperature	(C)	68.00	68.00 *	41.90	74.87	-81.88
Pressure	(kPa)	6977	6977	206.8 *	137.9	137.9
Molar Flow	(gmole/h)	0.8250	8.711	0.8250	0.6848	0.1403
Mass Flow	(kg/d)	0.6510	6.858	0.6510	0.5051	0.1459
Std Ideal Liq Vol Flow	(m3/h)	3.356e-005	3.925e-004	3.356e-005	2.616e-005	7.408e-006
Heat Flow	(kW)	-6.095e-002	-0.6524	-6.095e-002	-4.565e-002	-1.517e-002
Molar Enthalpy	(kJ/kgmole)	-2.660e+005	-2.696e+005	-2.660e+005	-2.400e+005	-3.893e+005
Name		M-RECY	PURGE-1	PURGE-2	LT-GAS	WATER-OUT-2
Vapour Fraction		1.0000	1.0000	1.0000	0.9969	0.0000
Temperature	(C)	68.00	68.00	30.50	-8.770	108.7
Pressure	(kPa)	6977	6977	137.9	137.9	137.9
Molar Flow	(gmole/h)	7.886	0.2366	0.2366	0.3768	6.036e-002
Mass Flow	(kg/d)	6.207	0.1862	0.1862	0.3321	2.667e-002
Std Ideal Liq Vol Flow	(m3/h)	3.590e-004	1.077e-005	1.077e-005	1.818e-005	1.127e-006
Heat Flow	(kW)	-0.5915	-1.774e-002	-1.774e-002	-3.291e-002	-4.670e-003
Molar Enthalpy	(kJ/kgmole)	-2.700e+005	-2.700e+005	-2.700e+005	-3.144e+005	-2.785e+005
Name		MEOH-9	CO2, Water In	H2,CO,H2O Out	9	Sweep Gas In
Vapour Fraction		0.0000	1.0000	1.0000	1.0000	1.0000
Temperature	(C)	40.00	800.3	800.0	800.0 *	800.3
Pressure	(kPa)	137.9	137.9	135.1	137.9	135.1
Molar Flow	(gmole/h)	0.6244	3.293	3.293	3.293	1.000e-010 *
Mass Flow	(kg/d)	0.4785	1.987	1.232	1.987	4.357e-011
Std Ideal Liq Vol Flow	(m3/h)	2.503e-005	9.883e-005	1.010e-004	9.879e-005	1.815e-015
Heat Flow	(kW)	-4.145e-002	-0.2162	-8.115e-002	-0.2162	-5.841e-012
Molar Enthalpy	(kJ/kgmole)	-2.390e+005	-2.363e+005	-8.872e+004	-2.363e+005	-2.103e+005

Workbook: Case (Main) (continued)

Streams (continued)

Fluid Pkg: All

Name		Hot O2	400	8	Warm O2	25
Vapour Fraction		1.0000	0.0000	0.4212	1.0000	1.0000
Temperature	(C)	800.0	800.3	36.65	359.1	123.0
Pressure	(kPa)	135.1	137.9	137.9	135.1	135.1
Molar Flow	(gmole/h)	0.9833	0.0000	3.293	0.9833	3.293
Mass Flow	(kg/d)	0.7552	0.0000	1.987	0.7552	1.232
Std Ideal Liq Vol Flow	(m3/h)	2.766e-005	0.0000	9.880e-005	2.766e-005	1.010e-004
Heat Flow	(kW)	6.897e-003	0.0000	-0.2672	2.810e-003	-0.1021
Molar Enthalpy	(kJ/kgmole)	2.525e+004	-2.363e+005	-2.921e+005	1.029e+004	-1.116e+005
Name		WATER-IN	CO2-IN	4	5	6
Vapour Fraction		0.0000	1.0000	1.0000	1.0000	1.0000
Temperature	(C)	21.00 *	21.00 *	775.0 *	98.00 *	120.0 *
Pressure	(kPa)	137.9	137.9 *	137.9	137.9	135.1
Molar Flow	(gmole/h)	1.372	0.9468	3.293	3.293	0.4722
Mass Flow	(kg/d)	0.5930 *	1.000 *	1.987	1.987	0.1766
Std Ideal Liq Vol Flow	(m3/h)	2.476e-005	5.048e-005	9.879e-005	9.879e-005	1.448e-005
Heat Flow	(kW)	-0.1090	-0.1036	-0.2172	-0.2422	-1.465e-002
Molar Enthalpy	(kJ/kgmole)	-2.862e+005	-3.940e+005	-2.374e+005	-2.648e+005	-1.117e+005
Name		7	10	SYNG-1	13	14
Vapour Fraction		1.0000	1.0000	1.0000	0.0000	0.0000
Temperature	(C)	120.0	122.8	26.67 *	26.67	26.67
Pressure	(kPa)	135.1	137.9	135.1	135.1	137.9
Molar Flow	(gmole/h)	2.821	0.4722	2.318	0.5025	0.5025
Mass Flow	(kg/d)	1.055	0.1766	0.8377	0.2173	0.2173
Std Ideal Liq Vol Flow	(m3/h)	8.649e-005	1.448e-005	7.742e-005	9.073e-006	9.073e-006
Heat Flow	(kW)	-8.750e-002	-1.464e-002	-5.600e-002	-3.989e-002	-3.989e-002
Molar Enthalpy	(kJ/kgmole)	-1.117e+005	-1.116e+005	-8.697e+004	-2.858e+005	-2.858e+005
Name		SYNG-RCY	O2-OUT	18	17	11
Vapour Fraction		0.4705	1.0000	0.4601	0.4212	1.0000
Temperature	(C)	64.16	61.65	56.76	36.65 *	120.0
Pressure	(kPa)	137.9	135.1	137.9	137.9 *	135.1
Molar Flow	(gmole/h)	0.9748	0.9833	3.293	3.293 *	3.293
Mass Flow	(kg/d)	0.3939	0.7552	1.987	1.987	1.232
Std Ideal Liq Vol Flow	(m3/h)	2.355e-005	2.766e-005	9.879e-005	9.879e-005	1.010e-004
Heat Flow	(kW)	-5.453e-002	2.911e-004	-0.2646	-0.2672	-0.1021
Molar Enthalpy	(kJ/kgmole)	-2.014e+005	1066	-2.892e+005	-2.921e+005	-1.117e+005
Name		19	20	21	22	23
Vapour Fraction		1.0000	1.0000	1.0000	1.0000 *	1.0000
Temperature	(C)	176.7 *	54.44 *	176.7 *	65.24	176.7 *
Pressure	(kPa)	433.3	433.3	1071	1071	2409
Molar Flow	(gmole/h)	2.318	2.318	2.318	2.318	2.318
Mass Flow	(kg/d)	0.8377	0.8377	0.8377	0.8377	0.8377
Std Ideal Liq Vol Flow	(m3/h)	7.742e-005	7.742e-005	7.742e-005	7.742e-005	7.742e-005
Heat Flow	(kW)	-5.306e-002	-5.548e-002	-5.307e-002	-5.528e-002	-5.309e-002
Molar Enthalpy	(kJ/kgmole)	-8.241e+004	-8.615e+004	-8.242e+004	-8.585e+004	-8.244e+004

Workbook: Case (Main) (continued)

Streams (continued)

Fluid Pkg: All

Name		24	26	27	12	COMB-PROD
Vapour Fraction		1.0000 *	1.0000	1.0000 *	0.9991	1.0000
Temperature	(C)	82.39	176.7 *	96.58	83.57 *	1000 *
Pressure	(kPa)	2409	4695	4695	6977 *	137.9
Molar Flow	(gmole/h)	2.318	2.318	2.318	9.967 *	0.3900
Mass Flow	(kg/d)	0.8377	0.8377	0.8377	6.858	0.3714
Std Ideal Liq Vol Flow	(m3/h)	7.742e-005	7.742e-005	7.742e-005	4.256e-004	1.851e-005
Heat Flow	(kW)	-5.498e-002	-5.311e-002	-5.474e-002	-0.6271	-3.486e-002
Molar Enthalpy	(kJ/kgmole)	-8.538e+004	-8.248e+004	-8.501e+004	-2.265e+005	-3.218e+005
Name		28	O2-IN-1	WATER-OUT-1	CO2-OUT	COMB-PROD-2
Vapour Fraction		0.0000	1.0000	0.0000	1.0000	1.0000
Temperature	(C)	1000	15.56 *	26.67	26.67 *	1000 *
Pressure	(kPa)	137.9	137.9 *	137.9	137.9	137.9
Molar Flow	(gmole/h)	0.0000	5.117e-002	1.284	0.9684	1.862
Mass Flow	(kg/d)	0.0000	0.0393 *	0.5556	1.007	1.191
Std Ideal Liq Vol Flow	(m3/h)	0.0000	1.439e-006	2.320e-005	5.076e-005	5.546e-005
Heat Flow	(kW)	0.0000	-4.102e-006	-0.1019	-0.1048	-0.1299
Molar Enthalpy	(kJ/kgmole)	-3.218e+005	-288.6	-2.858e+005	-3.897e+005	-2.511e+005
Name		16	29	O2-IN-2	COMP-2 W	MEOH-1 Q
Vapour Fraction		---	0.0000	1.0000	---	---
Temperature	(C)	---	1000	26.67 *	---	---
Pressure	(kPa)	---	137.9	137.9 *	---	---
Molar Flow	(gmole/h)	---	0.0000	0.9284	---	---
Mass Flow	(kg/d)	---	0.0000	0.7130 *	---	---
Std Ideal Liq Vol Flow	(m3/h)	---	0.0000	2.611e-005	---	---
Heat Flow	(kW)	---	0.0000	9.263e-006	7.659e-004	-1.661e-002
Molar Enthalpy	(kJ/kgmole)	---	-2.511e+005	35.92	---	---
Name		COND Q	CND1 Q	RB1 Q	CND2 Q	RB2 Q
Vapour Fraction		---	---	---	---	---
Temperature	(C)	---	---	---	---	---
Pressure	(kPa)	---	---	---	---	---
Molar Flow	(gmole/h)	---	---	---	---	---
Mass Flow	(kg/d)	---	---	---	---	---
Std Ideal Liq Vol Flow	(m3/h)	---	---	---	---	---
Heat Flow	(kW)	9.488e-003	1.320e-003	1.454e-003	1.434e-002	1.387e-002
Molar Enthalpy	(kJ/kgmole)	---	---	---	---	---
Name		Electrolysis Power	Process Heat	Top Heat Q	Preheat Q	Circ Pwr
Vapour Fraction		---	---	---	---	---
Temperature	(C)	---	---	---	---	---
Pressure	(kPa)	---	---	---	---	---
Molar Flow	(gmole/h)	---	---	---	---	---
Mass Flow	(kg/d)	---	---	---	---	---
Std Ideal Liq Vol Flow	(m3/h)	---	---	---	---	---
Heat Flow	(kW)	0.1419	-8.243e-015	1.024e-003	2.238e-002	1.158e-005
Molar Enthalpy	(kJ/kgmole)	---	---	---	---	---

Workbook: Case (Main) (continued)

Streams (continued)

Fluid Pkg: All

Name		Amb Q	Water Pump Pwr	ST1 PWR	IC1 Q	IC2 Q
Vapour Fraction		---	---	---	---	---
Temperature	(C)	---	---	---	---	---
Pressure	(kPa)	---	---	---	---	---
Molar Flow	(gmole/h)	---	---	---	---	---
Mass Flow	(kg/d)	---	---	---	---	---
Std Ideal Liq Vol Flow	(m3/h)	---	---	---	---	---
Heat Flow	(kW)	-8.400e-003	9.193e-009	2.940e-003	2.412e-003	2.212e-003
Molar Enthalpy	(kJ/kgmole)	---	---	---	---	---
Name		**ST2 PWR**	**ST3 PWR**	**IC3 Q**	**STG4 PWR**	**IC4 Q**
Vapour Fraction		---	---	---	---	---
Temperature	(C)	---	---	---	---	---
Pressure	(kPa)	---	---	---	---	---
Molar Flow	(gmole/h)	---	---	---	---	---
Mass Flow	(kg/d)	---	---	---	---	---
Std Ideal Liq Vol Flow	(m3/h)	---	---	---	---	---
Heat Flow	(kW)	2.405e-003	2.198e-003	1.892e-003	1.869e-003	1.632e-003
Molar Enthalpy	(kJ/kgmole)	---	---	---	---	---
Name		**STG5 PWR**	**COMB-Q-1**	**AMB-Q-1**	**COMB-Q-2**	
Vapour Fraction		---	---	---	---	
Temperature	(C)	---	---	---	---	
Pressure	(kPa)	---	---	---	---	
Molar Flow	(gmole/h)	---	---	---	---	
Mass Flow	(kg/d)	---	---	---	---	
Std Ideal Liq Vol Flow	(m3/h)	---	---	---	---	
Heat Flow	(kW)	1.335e-003	-1.945e-003	-4.204e-002	-8.844e-002	
Molar Enthalpy	(kJ/kgmole)	---	---	---	---	

Composition

Fluid Pkg: All

Name	SYNG-2	M-RECY2	1	SYNG-3	SYNG-5
Master Comp Mole Frac (H2O)	0.0260	0.0006	0.0065	0.0065	0.0065
Master Comp Mole Frac (Oxygen)	0.0000	0.0000	0.0000	0.0000	0.0000
Master Comp Mole Frac (Hydrogen)	0.5656	0.2122	0.2944	0.2944	0.2944
Master Comp Mole Frac (CO)	0.2828	0.1222	0.1595	0.1595	0.1595
Master Comp Mole Frac (CO2)	0.1256	0.6372	0.5182	0.5182	0.5182
Master Comp Mole Frac (Methanol)	0.0000	0.0277	0.0212	0.0212	0.0212
Master Comp Mole Frac (diM-Ether)	0.0000	0.0002	0.0001	0.0001	0.0001
Master Comp Mole Frac (1-Propanol)	0.0000	0.0000	0.0000	0.0000	0.0000
Name	**MEOH-2**	**MEOH-4**	**Vap Out**	**2**	**3**
Master Comp Mole Frac (H2O)	0.0079	0.0079	0.0078	0.0075	0.0076
Master Comp Mole Frac (Oxygen)	0.0000	0.0000	0.0000	0.0000	0.0000
Master Comp Mole Frac (Hydrogen)	0.1923	0.1923	0.1923	0.1922	0.1922
Master Comp Mole Frac (CO)	0.1108	0.1108	0.1108	0.1108	0.1108
Master Comp Mole Frac (CO2)	0.5925	0.5925	0.5925	0.5929	0.5929
Master Comp Mole Frac (Methanol)	0.0963	0.0963	0.0964	0.0964	0.0964
Master Comp Mole Frac (diM-Ether)	0.0002	0.0002	0.0002	0.0002	0.0002
Master Comp Mole Frac (1-Propanol)	0.0000	0.0000	0.0000	0.0000	0.0000

Workbook: Case (Main) (continued)

Composition (continued)

Fluid Pkg: All

Name	MEOH-6	MEOH-5	MEOH-7	MEOH-8	LT-GAS-1
Master Comp Mole Frac (H2O)	0.0777	0.0079	0.0777	0.0936	0.0000
Master Comp Mole Frac (Oxygen)	0.0000	0.0000	0.0000	0.0000	0.0000
Master Comp Mole Frac (Hydrogen)	0.0018	0.1923	0.0018	0.0000	0.0105
Master Comp Mole Frac (CO)	0.0025	0.1108	0.0025	0.0000	0.0144
Master Comp Mole Frac (CO2)	0.1656	0.5925	0.1656	0.0000	0.9739
Master Comp Mole Frac (Methanol)	0.7522	0.0963	0.7522	0.9062	0.0000
Master Comp Mole Frac (diM-Ether)	0.0002	0.0002	0.0002	0.0000	0.0012
Master Comp Mole Frac (1-Propanol)	0.0002	0.0000	0.0002	0.0002	0.0000
Name	M-RECY	PURGE-1	PURGE-2	LT-GAS	WATER-OUT-2
Master Comp Mole Frac (H2O)	0.0006	0.0006	0.0006	0.0004	0.9721
Master Comp Mole Frac (Oxygen)	0.0000	0.0000	0.0000	0.0000	0.0000
Master Comp Mole Frac (Hydrogen)	0.2122	0.2122	0.2122	0.1371	0.0000
Master Comp Mole Frac (CO)	0.1222	0.1222	0.1222	0.0821	0.0000
Master Comp Mole Frac (CO2)	0.6372	0.6372	0.6372	0.7625	0.0000
Master Comp Mole Frac (Methanol)	0.0277	0.0277	0.0277	0.0174	0.0279
Master Comp Mole Frac (diM-Ether)	0.0002	0.0002	0.0002	0.0006	0.0000
Master Comp Mole Frac (1-Propanol)	0.0000	0.0000	0.0000	0.0000	0.0000
Name	MEOH-9	CO2, Water In	H2,CO,H2O Out	9	Sweep Gas In
Master Comp Mole Frac (H2O)	0.0086	0.5973	0.1995	0.5977	0.9900 *
Master Comp Mole Frac (Oxygen)	0.0000	0.0000	0.0000	0.0000	0.0100 *
Master Comp Mole Frac (Hydrogen)	0.0000	0.0671	0.4648	0.0667	0.0000 *
Master Comp Mole Frac (CO)	0.0000	0.0329	0.2324	0.0333	0.0000 *
Master Comp Mole Frac (CO2)	0.0000	0.3027	0.1032	0.3023	0.0000 *
Master Comp Mole Frac (Methanol)	0.9912	0.0000	0.0000	0.0000	0.0000 *
Master Comp Mole Frac (diM-Ether)	0.0000	0.0000	0.0000	0.0000	0.0000 *
Master Comp Mole Frac (1-Propanol)	0.0002	0.0000	0.0000	0.0000	0.0000 *
Name	Hot O2	400	8	Warm O2	25
Master Comp Mole Frac (H2O)	0.0000	0.5973	0.5977	0.0000	0.1995
Master Comp Mole Frac (Oxygen)	1.0000	0.0000	0.0000	1.0000	0.0000
Master Comp Mole Frac (Hydrogen)	0.0000	0.0671	0.0667	0.0000	0.4648
Master Comp Mole Frac (CO)	0.0000	0.0329	0.0333	0.0000	0.2324
Master Comp Mole Frac (CO2)	0.0000	0.3027	0.3023	0.0000	0.1032
Master Comp Mole Frac (Methanol)	0.0000	0.0000	0.0000	0.0000	0.0000
Master Comp Mole Frac (diM-Ether)	0.0000	0.0000	0.0000	0.0000	0.0000
Master Comp Mole Frac (1-Propanol)	0.0000	0.0000	0.0000	0.0000	0.0000
Name	WATER-IN	CO2-IN	4	5	6
Master Comp Mole Frac (H2O)	1.0000 *	0.0000 *	0.5977	0.5977	0.1995
Master Comp Mole Frac (Oxygen)	0.0000 *	0.0000 *	0.0000	0.0000	0.0000
Master Comp Mole Frac (Hydrogen)	0.0000 *	0.0000 *	0.0667	0.0667	0.4648
Master Comp Mole Frac (CO)	0.0000 *	0.0000 *	0.0333	0.0333	0.2324
Master Comp Mole Frac (CO2)	0.0000 *	1.0000 *	0.3023	0.3023	0.1032
Master Comp Mole Frac (Methanol)	0.0000 *	0.0000 *	0.0000	0.0000	0.0000
Master Comp Mole Frac (diM-Ether)	0.0000 *	0.0000 *	0.0000	0.0000	0.0000
Master Comp Mole Frac (1-Propanol)	0.0000 *	0.0000 *	0.0000	0.0000	0.0000

Workbook: Case (Main) (continued)

Composition (continued)

Fluid Pkg: All

Name	7	10	SYNG-1	13	14
Master Comp Mole Frac (H2O)	0.1995	0.1995	0.0260	0.9999	0.9999
Master Comp Mole Frac (Oxygen)	0.0000	0.0000	0.0000	0.0000	0.0000
Master Comp Mole Frac (Hydrogen)	0.4648	0.4648	0.5656	0.0000	0.0000
Master Comp Mole Frac (CO)	0.2324	0.2324	0.2828	0.0000	0.0000
Master Comp Mole Frac (CO2)	0.1032	0.1032	0.1256	0.0001	0.0001
Master Comp Mole Frac (Methanol)	0.0000	0.0000	0.0000	0.0000	0.0000
Master Comp Mole Frac (diM-Ether)	0.0000	0.0000	0.0000	0.0000	0.0000
Master Comp Mole Frac (1-Propanol)	0.0000	0.0000	0.0000	0.0000	0.0000

Name	SYNG-RCY	O2-OUT	18	17	11
Master Comp Mole Frac (H2O)	0.6122	0.0000	0.5977	0.5977 *	0.1995
Master Comp Mole Frac (Oxygen)	0.0000	1.0000	0.0000	0.0000 *	0.0000
Master Comp Mole Frac (Hydrogen)	0.2252	0.0000	0.0667	0.0667 *	0.4648
Master Comp Mole Frac (CO)	0.1126	0.0000	0.0333	0.0333 *	0.2324
Master Comp Mole Frac (CO2)	0.0500	0.0000	0.3023	0.3023 *	0.1032
Master Comp Mole Frac (Methanol)	0.0000	0.0000	0.0000	0.0000 *	0.0000
Master Comp Mole Frac (diM-Ether)	0.0000	0.0000	0.0000	0.0000 *	0.0000
Master Comp Mole Frac (1-Propanol)	0.0000	0.0000	0.0000	0.0000 *	0.0000

Name	19	20	21	22	23
Master Comp Mole Frac (H2O)	0.0260	0.0260	0.0260	0.0260	0.0260
Master Comp Mole Frac (Oxygen)	0.0000	0.0000	0.0000	0.0000	0.0000
Master Comp Mole Frac (Hydrogen)	0.5656	0.5656	0.5656	0.5656	0.5656
Master Comp Mole Frac (CO)	0.2828	0.2828	0.2828	0.2828	0.2828
Master Comp Mole Frac (CO2)	0.1256	0.1256	0.1256	0.1256	0.1256
Master Comp Mole Frac (Methanol)	0.0000	0.0000	0.0000	0.0000	0.0000
Master Comp Mole Frac (diM-Ether)	0.0000	0.0000	0.0000	0.0000	0.0000
Master Comp Mole Frac (1-Propanol)	0.0000	0.0000	0.0000	0.0000	0.0000

Name	24	26	27	12	COMB-PROD
Master Comp Mole Frac (H2O)	0.0260	0.0260	0.0260	0.0065 *	0.1665
Master Comp Mole Frac (Oxygen)	0.0000	0.0000	0.0000	0.0000 *	0.0001
Master Comp Mole Frac (Hydrogen)	0.5656	0.5656	0.5656	0.2944 *	0.0000
Master Comp Mole Frac (CO)	0.2828	0.2828	0.2828	0.1595 *	0.0000
Master Comp Mole Frac (CO2)	0.1256	0.1256	0.1256	0.5182 *	0.8329
Master Comp Mole Frac (Methanol)	0.0000	0.0000	0.0000	0.0212 *	0.0000
Master Comp Mole Frac (diM-Ether)	0.0000	0.0000	0.0000	0.0001 *	0.0005
Master Comp Mole Frac (1-Propanol)	0.0000	0.0000	0.0000	0.0000 *	0.0000

Name	28	O2-IN-1	WATER-OUT-1	CO2-OUT	COMB-PROD-2
Master Comp Mole Frac (H2O)	0.1665	0.0000 *	0.9994	0.0259	0.6676
Master Comp Mole Frac (Oxygen)	0.0001	1.0000 *	0.0000	0.0001	0.0000
Master Comp Mole Frac (Hydrogen)	0.0000	0.0000 *	0.0000	0.0000	0.0000
Master Comp Mole Frac (CO)	0.0000	0.0000 *	0.0000	0.0000	0.0000
Master Comp Mole Frac (CO2)	0.8329	0.0000 *	0.0006	0.9736	0.3323
Master Comp Mole Frac (Methanol)	0.0000	0.0000 *	0.0000	0.0000	0.0000
Master Comp Mole Frac (diM-Ether)	0.0005	0.0000 *	0.0000	0.0002	0.0000
Master Comp Mole Frac (1-Propanol)	0.0000	0.0000 *	0.0000	0.0001	0.0001

Workbook: Case (Main) (continued)

Composition (continued)

Fluid Pkg: All

Name	16	29	O2-IN-2		
Master Comp Mole Frac (H2O)	---	0.6676	0.0000 *		
Master Comp Mole Frac (Oxygen)	---	0.0000	1.0000 *		
Master Comp Mole Frac (Hydrogen)	---	0.0000	0.0000 *		
Master Comp Mole Frac (CO)	---	0.0000	0.0000 *		
Master Comp Mole Frac (CO2)	---	0.3323	0.0000 *		
Master Comp Mole Frac (Methanol)	---	0.0000	0.0000 *		
Master Comp Mole Frac (diM-Ether)	---	0.0000	0.0000 *		
Master Comp Mole Frac (1-Propanol)	---	0.0001	0.0000 *		

Unit Ops

Operation Name	Operation Type	Feeds	Products	Ignored	Calc Level
COMP-2	Compressor	12 COMP-2 W	SYNG-3	No	500.0 *
Syngas Circulator	Compressor	6 Circ Pwr	10	No	500.0 *
SG CMP STG4	Compressor	24 STG4 PWR	26	No	500.0 *
SG CMP STG1	Compressor	SYNG-1 ST1 PWR	19	No	500.0 *
SG CMP STG2	Compressor	20 ST2 PWR	21	No	500.0 *
SG CMP STG3	Compressor	22 ST3 PWR	23	No	500.0 *
SG CMP STG 5	Compressor	27 STG5 PWR	SYNG-2	No	500.0 *
M3	Mixer	SYNG-2 M-RECY2	1	No	500.0 *
MIX-100	Mixer	LT-GAS-1 PURGE-2	LT-GAS	No	500.0 *
M1	Mixer	WATER-IN CO2-IN SYNG-RCY	8	No	500.0 *
M2	Mixer	14 10	SYNG-RCY	No	500.0 *
HX	LNG	SYNG-3 MEOH-2	SYNG-5 MEOH-4	No	500.0 *
Hi Temp Recup	LNG	H2,CO,H2O Out 5 Hot O2	25 4 Warm O2	No	500.0 *
Lo Temp Recup	LNG	25 17 Warm O2	11 18 O2-OUT	No	500.0 *
MEOH-1	Equilibrium Reactor	SYNG-5 MEOH-1 Q	2 Vap Out MEOH-1 Q	No	500.0 *
RWGS 1	Equilibrium Reactor	9	400 CO2, Water In	No	500.0 *
MEOH-2	Conversion Reactor	Vap Out	3 MEOH-2	No	500.0 *
COMB-1	Conversion Reactor	LT-GAS O2-IN-1	28 COMB-PROD	No	500.0 *

Workbook: Case (Main) (continued)

Unit Ops (continued)

Operation Name	Operation Type	Feeds	Products	Ignored	Calc Level
COMB-1	Conversion Reactor	COMB-Q-1	COMB-Q-1	No	500.0 *
COMB-2	Conversion Reactor	MEOH-9	29	No	500.0 *
		O2-IN-2	COMB-PROD-2		
		COMB-Q-2	COMB-Q-2		
KO-DRM	Separator	MEOH-5	MEOH-6	No	500.0 *
			M-RECY		
Water Knockout Tank	Separator	7	13	No	500.0 *
		Amb Q	SYNG-1		
			Amb Q		
KO-DRM 2	Separator	COMB-PROD	WATER-OUT-1	No	500.0 *
		COMB-PROD-2	CO2-OUT		
		AMB-Q-1	AMB-Q-1		
CONDNSR	Cooler	MEOH-4	MEOH-5	No	500.0 *
			COND Q		
INT CLR 1	Cooler	19	20	No	500.0 *
			IC1 Q		
INT CLR 2	Cooler	21	22	No	500.0 *
			IC2 Q		
INT CLR 3	Cooler	23	24	No	500.0 *
			IC3 Q		
INT CLR 4	Cooler	26	27	No	500.0 *
			IC4 Q		
VALVE-3	Valve	MEOH-6	MEOH-7	No	500.0 *
VALVE-2	Valve	PURGE-1	PURGE-2	No	500.0 *
T-100	Distillation	MEOH-7	MEOH-8	No	2500 *
		RB1 Q	LT-GAS-1		
			CND1 Q		
T-101	Distillation	MEOH-8	WATER-OUT-2	No	2500 *
		RB2 Q	MEOH-9		
			CND2 Q		
RCY-4	Recycle	8	17	No	3500 *
RCY-1	Recycle	1	12	No	3500 *
TEE-100	Tee	M-RECY	M-RECY2	No	500.0 *
			PURGE-1		
T1	Tee	11	6	No	500.0 *
			7		
High Temperature Co-Electrol	Standard Sub-Flowsheet	Sweep Gas In	Hot O2	No	2500 *
		CO2, Water In	H2,CO,H2O Out		
		Process Heat			
		Electrolysis Power			
Topping Heat	Heater	4	9	No	500.0 *
		Top Heat Q			
Preheater	Heater	18	5	No	500.0 *
		Preheat Q			
SPRDSHT-1	Spreadsheet			No	500.0 *
Water Pump	Pump	13	14	No	500.0 *
		Water Pump Pwr			

Honeywell	Company Name Not Available Calgary, Alberta CANADA	Case Name: \\vmware-host\...\PSA Results\MeOH Production w Comb ratio 2.usc Unit Set: NASA Date/Time: Wednesday Feb 16 2011, 10:17:53

Workbook: High Temperature Co-Electrolysis (TPL2)

Streams

Fluid Pkg: All

Name		Sweep Gas In @TPL2	O2 Out @TPL2	Gas Products @TPL2	Liquid @TPL2	Anode @TPL2
Vapour Fraction		1.0000	1.0000	1.0000	0.0000	1.0000
Temperature	(C)	800.3	800.0	800.0 *	800.0	800.0
Pressure	(kPa)	135.1	135.1	136.5	136.5	135.1
Molar Flow	(gmole/h)	1.000e-010	0.9833	4.276	0.0000	0.9833
Mass Flow	(kg/d)	4.357e-011	0.7552	1.987	0.0000	0.7552
Liquid Volume Flow	(m3/h)	1.815e-015	2.766e-005	1.477e-004	0.0000	2.766e-005
Heat Flow	(kW)	-5.841e-012	6.897e-003	-8.060e-002	0.0000	6.897e-003
Molar Enthalpy	(kJ/kgmole)	-2.103e+005	2.525e+004	-6.785e+004	-6.785e+004	2.525e+004
Name		H2,CO,H2O Out @TP	Cathode @TPL2	2 @TPL2	CO2, Water In @TPL2	Electrolysis Heatiing @
Vapour Fraction		1.0000	1.0000	0.0000	1.0000	---
Temperature	(C)	800.0 *	800.0 *	800.0	800.3	---
Pressure	(kPa)	135.1	135.1	135.1	137.9	---
Molar Flow	(gmole/h)	3.293	3.293	0.0000	3.293	---
Mass Flow	(kg/d)	1.232	1.232	0.0000	1.987	---
Liquid Volume Flow	(m3/h)	1.010e-004	1.201e-004	0.0000	9.883e-005	---
Heat Flow	(kW)	-8.115e-002	-8.749e-002	0.0000	-0.2162	0.1356
Molar Enthalpy	(kJ/kgmole)	-8.872e+004	-9.565e+004	-8.872e+004	-2.363e+005	---
Name		Process Heat @TPL2	Shift Reactor 2 Heat @	Electrolysis Power @T		
Vapour Fraction		---	---	---		
Temperature	(C)	---	---	---		
Pressure	(kPa)	---	---	---		
Molar Flow	(gmole/h)	---	---	---		
Mass Flow	(kg/d)	---	---	---		
Liquid Volume Flow	(m3/h)	---	---	---		
Heat Flow	(kW)	-8.243e-015	6.342e-003	0.1419		
Molar Enthalpy	(kJ/kgmole)	---	---	---		

Composition

Fluid Pkg: All

Name	Sweep Gas In @TPL2	O2 Out @TPL2	Gas Products @TPL2	Liquid @TPL2	Anode @TPL2
Comp Mole Frac (H2O)	0.9900	0.0000	0.0000	0.0000	0.0000
Comp Mole Frac (Oxygen)	0.0100	1.0000	0.2300	0.2300	1.0000
Comp Mole Frac (Hydrogen)	0.0000	0.0000	0.5116	0.5116	0.0000
Comp Mole Frac (CO)	0.0000	0.0000	0.0253	0.0253	0.0000
Comp Mole Frac (CO2)	0.0000	0.0000	0.2331	0.2331	0.0000
Comp Mole Frac (Methanol)	0.0000	0.0000	0.0000	0.0000	0.0000
Comp Mole Frac (diM-Ether)	0.0000	0.0000	0.0000	0.0000	0.0000
Comp Mole Frac (1-Propanol)	0.0000	0.0000	0.0000	0.0000	0.0000
Name	H2,CO,H2O Out @TP	Cathode @TPL2	2 @TPL2	CO2, Water In @TPL2	
Comp Mole Frac (H2O)	0.1995	0.0000	0.1995	0.5973	
Comp Mole Frac (Oxygen)	0.0000	0.0000	0.0000	0.0000	
Comp Mole Frac (Hydrogen)	0.4648	0.6644	0.4648	0.0671	
Comp Mole Frac (CO)	0.2324	0.0329	0.2324	0.0329	
Comp Mole Frac (CO2)	0.1032	0.3027	0.1032	0.3027	
Comp Mole Frac (Methanol)	0.0000	0.0000	0.0000	0.0000	
Comp Mole Frac (diM-Ether)	0.0000	0.0000	0.0000	0.0000	
Comp Mole Frac (1-Propanol)	0.0000	0.0000	0.0000	0.0000	

Unit Ops

Operation Name	Operation Type	Feeds	Products	Ignored	Calc Level
Temp Average ASR @TPL2	Spreadsheet			Yes	500.0 *
Electrolysis Spreadsheet @TP	Spreadsheet			No	500.0 *

Workbook: High Temperature Co-Electrolysis (TPL2) (continued)

Unit Ops (continued)

Operation Name	Operation Type	Feeds	Products	Ignored	Calc Level
Steam Electrolysis @TPL2	Spreadsheet			No	500.0 *
CO2 Electrolysis @TPL2	Spreadsheet			No	500.0 *
Sweep Gas/O2 Mixer @TPL2	Mixer	Anode @TPL2	O2 Out @TPL2	No	500.0 *
		Sweep Gas In @TPL2			
Isothermal Electrolysis @TPL2	Conversion Reactor	CO2, Water In @TPL2	Liquid @TPL2	No	500.0 *
		Electrolysis Heatiing @TPL2	Gas Products @TPL2		
			Electrolysis Heatiing @TPL2		
Electrodes @TPL2	Component Splitter	Gas Products @TPL2	Cathode @TPL2	No	500.0 *
			Anode @TPL2		
ERV-100 @TPL2	Equilibrium Reactor	Cathode @TPL2	2 @TPL2	No	500.0 *
		Shift Reactor 2 Heat @TPL2	H2,CO,H2O Out @TPL2		
			Shift Reactor 2 Heat @TPL2		
SET-1 @TPL2	Set			No	500.0 *
SET-3 @TPL2	Set			No	500.0 *
SET-2 @TPL2	Set			No	500.0 *
ADJ-1 @TPL2	Adjust			No	3500 *

Workbook: T-100 (COL1)

Material Streams

Fluid Pkg: All

Name		Reflux @COL1	To Condenser @COL1	Boilup @COL1	To Reboiler @COL1	MEOH-8 @COL1
Vapour Fraction		0.0000	1.0000	1.0000	0.0000	0.0000
Temperature	(C)	-81.88	-8.576	74.87	74.50	74.87
Pressure	(kPa)	137.9	137.9	137.9	137.9	137.9
Molar Flow	(gmole/h)	0.2104	0.3506	0.1440	0.8288	0.6848
Mass Flow	(kg/d)	0.2210	0.3669	0.1100	0.6152	0.5051
Liquid Volume Flow	(m3/h)	1.128e-005	1.869e-005	5.751e-006	3.191e-005	2.616e-005
Heat Flow	(kW)	-2.348e-002	-3.733e-002	-7.994e-003	-5.510e-002	-4.565e-002
Name		LT-GAS-1 @COL1	MEOH-7 @COL1			
Vapour Fraction		1.0000	0.1977			
Temperature	(C)	-81.88	41.90			
Pressure	(kPa)	137.9	206.8			
Molar Flow	(gmole/h)	0.1403	0.8250			
Mass Flow	(kg/d)	0.1459	0.6510			
Liquid Volume Flow	(m3/h)	7.408e-006	3.356e-005			
Heat Flow	(kW)	-1.517e-002	-6.095e-002			

Compositions

Fluid Pkg: All

Name	Reflux @COL1	To Condenser @COL1	Boilup @COL1	To Reboiler @COL1	MEOH-8 @COL1
Comp Mole Frac (H2O)	0.0000	0.0000	0.0152	0.0799	0.0936
Comp Mole Frac (Oxygen)	0.0000	0.0000	0.0000	0.0000	0.0000
Comp Mole Frac (Hydrogen)	0.0000	0.0042	0.0000	0.0000	0.0000
Comp Mole Frac (CO)	0.0000	0.0058	0.0000	0.0000	0.0000
Comp Mole Frac (CO2)	0.9300	0.9476	0.0000	0.0000	0.0000
Comp Mole Frac (Methanol)	0.0273	0.0164	0.9847	0.9199	0.9062
Comp Mole Frac (diM-Ether)	0.0426	0.0261	0.0000	0.0000	0.0000
Comp Mole Frac (1-Propanol)	0.0000	0.0000	0.0001	0.0002	0.0002

Workbook: T-100 (COL1) (continued)

Compositions (continued)

Fluid Pkg: All

Name	LT-GAS-1 @COL1	MEOH-7 @COL1			
Comp Mole Frac (H2O)	0.0000	0.0777			
Comp Mole Frac (Oxygen)	0.0000	0.0000			
Comp Mole Frac (Hydrogen)	0.0105	0.0018			
Comp Mole Frac (CO)	0.0144	0.0025			
Comp Mole Frac (CO2)	0.9739	0.1656			
Comp Mole Frac (Methanol)	0.0000	0.7522			
Comp Mole Frac (diM-Ether)	0.0012	0.0002			
Comp Mole Frac (1-Propanol)	0.0000	0.0002			

Energy Streams

Fluid Pkg: All

Name		CND1 Q @COL1	RB1 Q @COL1			
Heat Flow	(kW)	1.320e-003	1.454e-003			

Unit Ops

Operation Name	Operation Type	Feeds	Products	Ignored	Calc Level
Condenser @COL1	Partial Condenser	To Condenser @COL1 CND1 Q @COL1	LT-GAS-1 @COL1 Reflux @COL1 CND1 Q @COL1	No	500.0 *
Reboiler @COL1	Reboiler	To Reboiler @COL1 RB1 Q @COL1	MEOH-8 @COL1 Boilup @COL1	No	500.0 *
Main TS @COL1	Tray Section	Reflux @COL1 Boilup @COL1 MEOH-7 @COL1	To Reboiler @COL1 To Condenser @COL1	No	500.0 *

Workbook: T-101 (COL2)

Material Streams

Fluid Pkg: All

Name		Reflux @COL2	To Condenser @COL2	Boilup @COL2	To Reboiler @COL2	MEOH-9 @COL2
Vapour Fraction		0.0000	1.0000	1.0000	0.0000	0.0000
Temperature	(C)	40.00	73.90	108.7	108.6	40.00
Pressure	(kPa)	137.9	137.9	137.9	137.9	137.9
Molar Flow	(gmole/h)	0.6869	1.311	1.229	1.290	0.6244
Mass Flow	(kg/d)	0.5263	1.005	0.5467	0.5734	0.4785
Liquid Volume Flow	(m3/h)	2.753e-005	5.256e-005	2.319e-005	2.432e-005	2.503e-005
Heat Flow	(kW)	-4.560e-002	-7.271e-002	-8.113e-002	-9.966e-002	-4.145e-002
Name		WATER-2 @COL2	MEOH-8 @COL2			
Vapour Fraction		0.0000	0.0000			
Temperature	(C)	108.7	74.87			
Pressure	(kPa)	137.9	137.9			
Molar Flow	(gmole/h)	6.036e-002	0.6848			
Mass Flow	(kg/d)	2.667e-002	0.5051			
Liquid Volume Flow	(m3/h)	1.127e-006	2.616e-005			
Heat Flow	(kW)	-4.670e-003	-4.565e-002			

Workbook: T-101 (COL2) (continued)

Compositions

Fluid Pkg: All

Name	Reflux @COL2	To Condenser @COL2	Boilup @COL2	To Reboiler @COL2	MEOH-9 @COL2
Comp Mole Frac (H2O)	0.0086	0.0086	0.9634	0.9638	0.0086
Comp Mole Frac (Oxygen)	0.0000	0.0000	0.0000	0.0000	0.0000
Comp Mole Frac (Hydrogen)	0.0000	0.0000	0.0000	0.0000	0.0000
Comp Mole Frac (CO)	0.0000	0.0000	0.0000	0.0000	0.0000
Comp Mole Frac (CO2)	0.0000	0.0000	0.0000	0.0000	0.0000
Comp Mole Frac (Methanol)	0.9912	0.9912	0.0366	0.0362	0.9912
Comp Mole Frac (diM-Ether)	0.0000	0.0000	0.0000	0.0000	0.0000
Comp Mole Frac (1-Propanol)	0.0002	0.0002	0.0000	0.0000	0.0002

Name	WATER-2 @COL2	MEOH-8 @COL2			
Comp Mole Frac (H2O)	0.9721	0.0936			
Comp Mole Frac (Oxygen)	0.0000	0.0000			
Comp Mole Frac (Hydrogen)	0.0000	0.0000			
Comp Mole Frac (CO)	0.0000	0.0000			
Comp Mole Frac (CO2)	0.0000	0.0000			
Comp Mole Frac (Methanol)	0.0279	0.9062			
Comp Mole Frac (diM-Ether)	0.0000	0.0000			
Comp Mole Frac (1-Propanol)	0.0000	0.0002			

Energy Streams

Fluid Pkg: All

Name		CND2 Q @COL2	RB2 Q @COL2			
Heat Flow	(kW)	1.434e-002	1.387e-002			

Unit Ops

Operation Name	Operation Type	Feeds	Products	Ignored	Calc Level
Reboiler @COL2	Reboiler	To Reboiler @COL2 RB2 Q @COL2	WATER-2 @COL2 Boilup @COL2	No	500.0 *
Main TS @COL2	Tray Section	Reflux @COL2 Boilup @COL2 MEOH-8 @COL2	To Reboiler @COL2 To Condenser @COL2	No	500.0 *
Condenser @COL2	Total Condenser	To Condenser @COL2 CND2 Q @COL2	MEOH-9 @COL2 Reflux @COL2 CND2 Q @COL2	No	500.0 *

Workbook: Case (Main)

Streams

Fluid Pkg: All

Name		SYNG-2	M-RECY2	1	SYNG-3	SYNG-5
Vapour Fraction		1.0000	1.0000	1.0000	1.0000	1.0000
Temperature	(C)	170.3	40.00	89.52	98.99	216.7 *
Pressure	(kPa)	7501 *	6977	6977	7515 *	7460
Molar Flow	(gmole/h)	2.761	3.898	6.659	6.659	6.659
Mass Flow	(kg/d)	0.8478	1.797	2.645	2.645	2.645
Std Ideal Liq Vol Flow	(m3/h)	8.932e-005	1.499e-004	2.392e-004	2.392e-004	2.392e-004
Heat Flow	(kW)	-5.029e-002	-0.1680	-0.2183	-0.2177	-0.2103
Molar Enthalpy	(kJ/kgmole)	-6.557e+004	-1.551e+005	-1.180e+005	-1.177e+005	-1.137e+005
Name		MEOH-2	MEOH-4	Vap Out	2	3
Vapour Fraction		1.0000	0.9477	1.0000	0.0000	0.0000
Temperature	(C)	226.8	138.6	226.7 *	226.7	226.8
Pressure	(kPa)	7060	7005	7060	7060	7060
Molar Flow	(gmole/h)	5.085	5.085	5.085	0.0000	0.0000
Mass Flow	(kg/d)	2.645	2.645	2.645	0.0000	0.0000
Std Ideal Liq Vol Flow	(m3/h)	1.951e-004	1.951e-004	1.951e-004	0.0000	0.0000
Heat Flow	(kW)	-0.2307	-0.2381	-0.2307	-0.0000	-0.0000
Molar Enthalpy	(kJ/kgmole)	-1.633e+005	-1.686e+005	-1.633e+005	-1.633e+005	-1.633e+005
Name		MEOH-6	MEOH-5	MEOH-7	MEOH-8	LT-GAS-1
Vapour Fraction		0.0000	0.7904	0.1059	0.0000	1.0000
Temperature	(C)	40.00	40.00 *	29.47	77.28	8.386
Pressure	(kPa)	6977	6977	206.8 *	137.9	137.9
Molar Flow	(gmole/h)	1.066	5.085	1.066	0.9484	0.1172
Mass Flow	(kg/d)	0.7922	2.645	0.7922	0.6728	0.1194
Std Ideal Liq Vol Flow	(m3/h)	4.056e-005	1.951e-004	4.056e-005	3.446e-005	6.106e-006
Heat Flow	(kW)	-7.762e-002	-0.2508	-7.762e-002	-6.430e-002	-1.221e-002
Molar Enthalpy	(kJ/kgmole)	-2.622e+005	-1.776e+005	-2.622e+005	-2.441e+005	-3.749e+005
Name		M-RECY	PURGE-1	PURGE-2	LT-GAS	WATER-OUT-2
Vapour Fraction		1.0000	1.0000	1.0000	1.0000	0.0000
Temperature	(C)	40.00	40.00	24.50	15.75	108.6
Pressure	(kPa)	6977	6977	137.9	137.9	137.9
Molar Flow	(gmole/h)	4.019	0.1206	0.1206	0.2378	0.1744
Mass Flow	(kg/d)	1.853	5.559e-002	5.559e-002	0.1750	7.742e-002
Std Ideal Liq Vol Flow	(m3/h)	1.545e-004	4.636e-006	4.636e-006	1.074e-005	3.282e-006
Heat Flow	(kW)	-0.1732	-5.195e-003	-5.195e-003	-1.740e-002	-1.348e-002
Molar Enthalpy	(kJ/kgmole)	-1.551e+005	-1.551e+005	-1.551e+005	-2.634e+005	-2.782e+005
Name		MEOH-9	CO2, Water In	H2,CO,H2O Out	9	Sweep Gas In
Vapour Fraction		0.0000	1.0000	1.0000	1.0000	1.0000
Temperature	(C)	40.00	800.3	800.0	800.0 *	800.3
Pressure	(kPa)	137.9	137.9	135.1	137.9	135.1
Molar Flow	(gmole/h)	0.7741	3.807	3.807	3.807	1.000e-010 *
Mass Flow	(kg/d)	0.5953	2.183	1.246	2.183	4.357e-011
Std Ideal Liq Vol Flow	(m3/h)	3.117e-005	1.083e-004	1.144e-004	1.083e-004	1.815e-015
Heat Flow	(kW)	-5.129e-002	-0.2428	-7.644e-002	-0.2428	-5.841e-012
Molar Enthalpy	(kJ/kgmole)	-2.385e+005	-2.296e+005	-7.228e+004	-2.296e+005	-2.103e+005

Workbook: Case (Main) (continued)

Streams (continued)

Fluid Pkg: All

Name		Hot O2	400	8	Warm O2	25
Vapour Fraction		1.0000	0.0000	0.3745	1.0000	1.0000
Temperature	(C)	800.0	800.3	35.33	347.6	121.0
Pressure	(kPa)	135.1	137.9	137.9	135.1	135.1
Molar Flow	(gmole/h)	1.220	0.0000	3.807	1.220	3.807
Mass Flow	(kg/d)	0.9366	0.0000	2.183	0.9366	1.246
Std Ideal Liq Vol Flow	(m3/h)	3.430e-005	0.0000	1.083e-004	3.430e-005	1.144e-004
Heat Flow	(kW)	8.554e-003	-0.0000	-0.3036	3.359e-003	-0.1002
Molar Enthalpy	(kJ/kgmole)	2.525e+004	-2.296e+005	-2.871e+005	9917	-9.472e+004
Name		WATER-IN	CO2-IN	4	5	6
Vapour Fraction		0.0000	1.0000	1.0000	0.9933	1.0000
Temperature	(C)	21.00 *	21.00 *	775.0 *	96.00 *	122.0 *
Pressure	(kPa)	137.9	137.9 *	137.9	137.9	135.1
Molar Flow	(gmole/h)	1.814	0.9468	3.807	3.807	0.5140
Mass Flow	(kg/d)	0.7844 *	1.000 *	2.183	2.183	0.1682
Std Ideal Liq Vol Flow	(m3/h)	3.275e-005	5.048e-005	1.083e-004	1.083e-004	1.544e-005
Heat Flow	(kW)	-0.1442	-0.1036	-0.2439	-0.2729	-1.352e-002
Molar Enthalpy	(kJ/kgmole)	-2.862e+005	-3.940e+005	-2.307e+005	-2.580e+005	-9.469e+004
Name		7	10	SYNG-1	13	14
Vapour Fraction		1.0000	1.0000	1.0000	0.0000	0.0000
Temperature	(C)	122.0	124.9	26.67 *	26.67	26.67
Pressure	(kPa)	135.1	137.9	135.1	135.1	137.9
Molar Flow	(gmole/h)	3.293	0.5140	2.761	0.5324	0.5324
Mass Flow	(kg/d)	1.078	0.1682	0.8478	0.2302	0.2302
Std Ideal Liq Vol Flow	(m3/h)	9.893e-005	1.544e-005	8.932e-005	9.612e-006	9.612e-006
Heat Flow	(kW)	-8.663e-002	-1.351e-002	-5.353e-002	-4.226e-002	-4.226e-002
Molar Enthalpy	(kJ/kgmole)	-9.469e+004	-9.460e+004	-6.980e+004	-2.858e+005	-2.858e+005
Name		SYNG-RCY	O2-OUT	18	17	11
Vapour Fraction		0.4803	1.0000	0.4101	0.3745	1.0000
Temperature	(C)	62.75	60.33	56.64	35.33 *	122.0
Pressure	(kPa)	137.9	135.1	137.9	137.9 *	135.1
Molar Flow	(gmole/h)	1.046	1.220	3.807	3.807 *	3.807
Mass Flow	(kg/d)	0.3984	0.9366	2.183	2.183	1.246
Std Ideal Liq Vol Flow	(m3/h)	2.505e-005	3.430e-005	1.083e-004	1.083e-004	1.144e-004
Heat Flow	(kW)	-5.577e-002	3.478e-004	-0.3006	-0.3036	-0.1001
Molar Enthalpy	(kJ/kgmole)	-1.919e+005	1027	-2.843e+005	-2.871e+005	-9.469e+004
Name		19	20	21	22	23
Vapour Fraction		1.0000	1.0000	1.0000	1.0000 *	1.0000
Temperature	(C)	176.7 *	54.44 *	176.7 *	64.65	176.7 *
Pressure	(kPa)	426.1	426.1	1040	1040	2321
Molar Flow	(gmole/h)	2.761	2.761	2.761	2.761	2.761
Mass Flow	(kg/d)	0.8478	0.8478	0.8478	0.8478	0.8478
Std Ideal Liq Vol Flow	(m3/h)	8.932e-005	8.932e-005	8.932e-005	8.932e-005	8.932e-005
Heat Flow	(kW)	-5.008e-002	-5.291e-002	-5.009e-002	-5.269e-002	-5.010e-002
Molar Enthalpy	(kJ/kgmole)	-6.530e+004	-6.899e+004	-6.531e+004	-6.870e+004	-6.532e+004

Workbook: Case (Main) (continued)

Streams (continued)

Fluid Pkg: All

Name		24	26	27	12	COMB-PROD
Vapour Fraction		1.0000 *	1.0000	1.0000 *	1.0000	1.0000
Temperature	(C)	81.70	176.7 *	95.94	89.52 *	1000 *
Pressure	(kPa)	2321	4503	4503	6977 *	137.9
Molar Flow	(gmole/h)	2.761	2.761	2.761	6.659 *	0.2511
Mass Flow	(kg/d)	0.8478	0.8478	0.8478	2.645	0.2123
Std Ideal Liq Vol Flow	(m3/h)	8.932e-005	8.932e-005	8.932e-005	2.392e-004	1.040e-005
Heat Flow	(kW)	-5.233e-002	-5.011e-002	-5.203e-002	-0.2182	-2.074e-002
Molar Enthalpy	(kJ/kgmole)	-6.823e+004	-6.534e+004	-6.784e+004	-1.180e+005	-2.974e+005
Name		28	O2-IN-1	WATER-OUT-1	CO2-OUT	COMB-PROD-2
Vapour Fraction		0.0000	1.0000	0.0000	1.0000	1.0000
Temperature	(C)	1000	15.56 *	26.67	26.67 *	1000 *
Pressure	(kPa)	137.9	137.9 *	137.9	137.9	137.9
Molar Flow	(gmole/h)	0.0000	4.857e-002	1.609	0.9644	2.322
Mass Flow	(kg/d)	0.0000	0.0373 *	0.6962	1.003	1.487
Std Ideal Liq Vol Flow	(m3/h)	0.0000	1.366e-006	2.908e-005	5.054e-005	6.922e-005
Heat Flow	(kW)	-0.0000	-3.893e-006	-0.1277	-0.1044	-0.1620
Molar Enthalpy	(kJ/kgmole)	-2.974e+005	-288.6	-2.858e+005	-3.897e+005	-2.512e+005
Name		16	29	O2-IN-2	COMP-2 W	MEOH-1 Q
Vapour Fraction		---	0.0000	1.0000	---	---
Temperature	(C)	---	1000	26.67 *	---	---
Pressure	(kPa)	---	137.9	137.9 *	---	---
Molar Flow	(gmole/h)	---	0.0000	1.161	---	---
Mass Flow	(kg/d)	---	0.0000	0.8916 *	---	---
Std Ideal Liq Vol Flow	(m3/h)	---	0.0000	3.265e-005	---	---
Heat Flow	(kW)	---	-0.0000	1.158e-005	5.606e-004	-2.038e-002
Molar Enthalpy	(kJ/kgmole)	---	-2.512e+005	35.92	---	---
Name		COND Q	CND1 Q	RB1 Q	CND2 Q	RB2 Q
Vapour Fraction		---	---	---	---	---
Temperature	(C)	---	---	---	---	---
Pressure	(kPa)	---	---	---	---	---
Molar Flow	(gmole/h)	---	---	---	---	---
Mass Flow	(kg/d)	---	---	---	---	---
Std Ideal Liq Vol Flow	(m3/h)	---	---	---	---	---
Heat Flow	(kW)	1.271e-002	2.076e-003	3.192e-003	1.678e-002	1.631e-002
Molar Enthalpy	(kJ/kgmole)	---	---	---	---	---
Name		Electrolysis Power	Process Heat	Top Heat Q	Preheat Q	Circ Pwr
Vapour Fraction		---	---	---	---	---
Temperature	(C)	---	---	---	---	---
Pressure	(kPa)	---	---	---	---	---
Molar Flow	(gmole/h)	---	---	---	---	---
Mass Flow	(kg/d)	---	---	---	---	---
Std Ideal Liq Vol Flow	(m3/h)	---	---	---	---	---
Heat Flow	(kW)	0.1749	5.311e-013	1.169e-003	2.777e-002	1.267e-005
Molar Enthalpy	(kJ/kgmole)	---	---	---	---	---

Workbook: Case (Main) (continued)

Streams (continued)

Fluid Pkg: All

Name		Amb Q	Water Pump Pwr	ST1 PWR	IC1 Q	IC2 Q
Vapour Fraction		---	---	---	---	---
Temperature	(C)	---	---	---	---	---
Pressure	(kPa)	---	---	---	---	---
Molar Flow	(gmole/h)	---	---	---	---	---
Mass Flow	(kg/d)	---	---	---	---	---
Std Ideal Liq Vol Flow	(m3/h)	---	---	---	---	---
Heat Flow	(kW)	-9.166e-003	9.739e-009	3.452e-003	2.828e-003	2.605e-003
Molar Enthalpy	(kJ/kgmole)	---	---	---	---	---

Name		ST2 PWR	ST3 PWR	IC3 Q	STG4 PWR	IC4 Q
Vapour Fraction		---	---	---	---	---
Temperature	(C)	---	---	---	---	---
Pressure	(kPa)	---	---	---	---	---
Molar Flow	(gmole/h)	---	---	---	---	---
Mass Flow	(kg/d)	---	---	---	---	---
Std Ideal Liq Vol Flow	(m3/h)	---	---	---	---	---
Heat Flow	(kW)	2.823e-003	2.594e-003	2.229e-003	2.212e-003	1.919e-003
Molar Enthalpy	(kJ/kgmole)	---	---	---	---	---

Name		STG5 PWR	COMB-Q-1	AMB-Q-1	COMB-Q-2	
Vapour Fraction		---	---	---	---	
Temperature	(C)	---	---	---	---	
Pressure	(kPa)	---	---	---	---	
Molar Flow	(gmole/h)	---	---	---	---	
Mass Flow	(kg/d)	---	---	---	---	
Std Ideal Liq Vol Flow	(m3/h)	---	---	---	---	
Heat Flow	(kW)	1.746e-003	-3.335e-003	-4.936e-002	-0.1108	
Molar Enthalpy	(kJ/kgmole)	---	---	---	---	

Composition

Fluid Pkg: All

Name	SYNG-2	M-RECY2	1	SYNG-3	SYNG-5
Master Comp Mole Frac (H2O)	0.0260	0.0003	0.0109	0.0109	0.0109
Master Comp Mole Frac (Oxygen)	0.0000	0.0000	0.0000	0.0000	0.0000
Master Comp Mole Frac (Hydrogen)	0.6311	0.5725	0.5968	0.5968	0.5968
Master Comp Mole Frac (CO)	0.2524	0.0419	0.1292	0.1292	0.1292
Master Comp Mole Frac (CO2)	0.0905	0.3782	0.2589	0.2589	0.2589
Master Comp Mole Frac (Methanol)	0.0000	0.0070	0.0041	0.0041	0.0041
Master Comp Mole Frac (diM-Ether)	0.0000	0.0002	0.0001	0.0001	0.0001
Master Comp Mole Frac (1-Propanol)	0.0000	0.0000	0.0000	0.0000	0.0000

Name	MEOH-2	MEOH-4	Vap Out	2	3
Master Comp Mole Frac (H2O)	0.0333	0.0333	0.0332	0.0332	0.0333
Master Comp Mole Frac (Oxygen)	0.0000	0.0000	0.0000	0.0000	0.0000
Master Comp Mole Frac (Hydrogen)	0.4530	0.4530	0.4530	0.4530	0.4530
Master Comp Mole Frac (CO)	0.0332	0.0332	0.0332	0.0332	0.0332
Master Comp Mole Frac (CO2)	0.3202	0.3202	0.3202	0.3202	0.3202
Master Comp Mole Frac (Methanol)	0.1601	0.1601	0.1602	0.1602	0.1601
Master Comp Mole Frac (diM-Ether)	0.0002	0.0002	0.0001	0.0001	0.0002
Master Comp Mole Frac (1-Propanol)	0.0000	0.0000	0.0000	0.0000	0.0000

Workbook: Case (Main) (continued)

Composition (continued)

Fluid Pkg: All

Name	MEOH-6	MEOH-5	MEOH-7	MEOH-8	LT-GAS-1
Master Comp Mole Frac (H2O)	0.1579	0.0333	0.1579	0.1775	0.0000
Master Comp Mole Frac (Oxygen)	0.0000	0.0000	0.0000	0.0000	0.0000
Master Comp Mole Frac (Hydrogen)	0.0024	0.4530	0.0024	0.0000	0.0220
Master Comp Mole Frac (CO)	0.0005	0.0332	0.0005	0.0000	0.0043
Master Comp Mole Frac (CO2)	0.1016	0.3202	0.1016	0.0000	0.9232
Master Comp Mole Frac (Methanol)	0.7373	0.1601	0.7373	0.8224	0.0490
Master Comp Mole Frac (diM-Ether)	0.0002	0.0002	0.0002	0.0000	0.0016
Master Comp Mole Frac (1-Propanol)	0.0001	0.0000	0.0001	0.0001	0.0000

Name	M-RECY	PURGE-1	PURGE-2	LT-GAS	WATER-OUT-2
Master Comp Mole Frac (H2O)	0.0003	0.0003	0.0003	0.0001	0.9652
Master Comp Mole Frac (Oxygen)	0.0000	0.0000	0.0000	0.0000	0.0000
Master Comp Mole Frac (Hydrogen)	0.5725	0.5725	0.5725	0.3011	0.0000
Master Comp Mole Frac (CO)	0.0419	0.0419	0.0419	0.0233	0.0000
Master Comp Mole Frac (CO2)	0.3782	0.3782	0.3782	0.6469	0.0000
Master Comp Mole Frac (Methanol)	0.0070	0.0070	0.0070	0.0277	0.0348
Master Comp Mole Frac (diM-Ether)	0.0002	0.0002	0.0002	0.0009	0.0000
Master Comp Mole Frac (1-Propanol)	0.0000	0.0000	0.0000	0.0000	0.0000

Name	MEOH-9	CO2, Water In	H2,CO,H2O Out	9	Sweep Gas In
Master Comp Mole Frac (H2O)	0.0000	0.6407	0.1834	0.6411	0.9900 *
Master Comp Mole Frac (Oxygen)	0.0000	0.0000	0.0000	0.0000	0.0100 *
Master Comp Mole Frac (Hydrogen)	0.0000	0.0718	0.5291	0.0714	0.0000 *
Master Comp Mole Frac (CO)	0.0000	0.0281	0.2116	0.0286	0.0000 *
Master Comp Mole Frac (CO2)	0.0000	0.2593	0.0759	0.2589	0.0000 *
Master Comp Mole Frac (Methanol)	0.9998	0.0000	0.0000	0.0000	0.0000 *
Master Comp Mole Frac (diM-Ether)	0.0000	0.0000	0.0000	0.0000	0.0000 *
Master Comp Mole Frac (1-Propanol)	0.0002	0.0000	0.0000	0.0000	0.0000 *

Name	Hot O2	400	8	Warm O2	25
Master Comp Mole Frac (H2O)	0.0000	0.6407	0.6411	0.0000	0.1834
Master Comp Mole Frac (Oxygen)	1.0000	0.0000	0.0000	1.0000	0.0000
Master Comp Mole Frac (Hydrogen)	0.0000	0.0718	0.0714	0.0000	0.5291
Master Comp Mole Frac (CO)	0.0000	0.0282	0.0286	0.0000	0.2116
Master Comp Mole Frac (CO2)	0.0000	0.2593	0.2589	0.0000	0.0759
Master Comp Mole Frac (Methanol)	0.0000	0.0000	0.0000	0.0000	0.0000
Master Comp Mole Frac (diM-Ether)	0.0000	0.0000	0.0000	0.0000	0.0000
Master Comp Mole Frac (1-Propanol)	0.0000	0.0000	0.0000	0.0000	0.0000

Name	WATER-IN	CO2-IN	4	5	6
Master Comp Mole Frac (H2O)	1.0000 *	0.0000 *	0.6411	0.6411	0.1834
Master Comp Mole Frac (Oxygen)	0.0000 *	0.0000 *	0.0000	0.0000	0.0000
Master Comp Mole Frac (Hydrogen)	0.0000 *	0.0000 *	0.0714	0.0714	0.5291
Master Comp Mole Frac (CO)	0.0000 *	0.0000 *	0.0286	0.0286	0.2116
Master Comp Mole Frac (CO2)	0.0000 *	1.0000 *	0.2589	0.2589	0.0759
Master Comp Mole Frac (Methanol)	0.0000 *	0.0000 *	0.0000	0.0000	0.0000
Master Comp Mole Frac (diM-Ether)	0.0000 *	0.0000 *	0.0000	0.0000	0.0000
Master Comp Mole Frac (1-Propanol)	0.0000 *	0.0000 *	0.0000	0.0000	0.0000

Workbook: Case (Main) (continued)

Composition (continued)

Fluid Pkg: All

Name	7	10	SYNG-1	13	14
Master Comp Mole Frac (H2O)	0.1834	0.1834	0.0260	0.9999	0.9999
Master Comp Mole Frac (Oxygen)	0.0000	0.0000	0.0000	0.0000	0.0000
Master Comp Mole Frac (Hydrogen)	0.5291	0.5291	0.6311	0.0000	0.0000
Master Comp Mole Frac (CO)	0.2116	0.2116	0.2524	0.0000	0.0000
Master Comp Mole Frac (CO2)	0.0759	0.0759	0.0905	0.0001	0.0001
Master Comp Mole Frac (Methanol)	0.0000	0.0000	0.0000	0.0000	0.0000
Master Comp Mole Frac (diM-Ether)	0.0000	0.0000	0.0000	0.0000	0.0000
Master Comp Mole Frac (1-Propanol)	0.0000	0.0000	0.0000	0.0000	0.0000

Name	SYNG-RCY	O2-OUT	18	17	11
Master Comp Mole Frac (H2O)	0.5989	0.0000	0.6411	0.6411 *	0.1834
Master Comp Mole Frac (Oxygen)	0.0000	1.0000	0.0000	0.0000 *	0.0000
Master Comp Mole Frac (Hydrogen)	0.2599	0.0000	0.0714	0.0714 *	0.5291
Master Comp Mole Frac (CO)	0.1039	0.0000	0.0286	0.0286 *	0.2116
Master Comp Mole Frac (CO2)	0.0373	0.0000	0.2589	0.2589 *	0.0759
Master Comp Mole Frac (Methanol)	0.0000	0.0000	0.0000	0.0000 *	0.0000
Master Comp Mole Frac (diM-Ether)	0.0000	0.0000	0.0000	0.0000 *	0.0000
Master Comp Mole Frac (1-Propanol)	0.0000	0.0000	0.0000	0.0000 *	0.0000

Name	19	20	21	22	23
Master Comp Mole Frac (H2O)	0.0260	0.0260	0.0260	0.0260	0.0260
Master Comp Mole Frac (Oxygen)	0.0000	0.0000	0.0000	0.0000	0.0000
Master Comp Mole Frac (Hydrogen)	0.6311	0.6311	0.6311	0.6311	0.6311
Master Comp Mole Frac (CO)	0.2524	0.2524	0.2524	0.2524	0.2524
Master Comp Mole Frac (CO2)	0.0905	0.0905	0.0905	0.0905	0.0905
Master Comp Mole Frac (Methanol)	0.0000	0.0000	0.0000	0.0000	0.0000
Master Comp Mole Frac (diM-Ether)	0.0000	0.0000	0.0000	0.0000	0.0000
Master Comp Mole Frac (1-Propanol)	0.0000	0.0000	0.0000	0.0000	0.0000

Name	24	26	27	12	COMB-PROD
Master Comp Mole Frac (H2O)	0.0260	0.0260	0.0260	0.0109 *	0.3378
Master Comp Mole Frac (Oxygen)	0.0000	0.0000	0.0000	0.0000 *	0.0004
Master Comp Mole Frac (Hydrogen)	0.6311	0.6311	0.6311	0.5968 *	0.0000
Master Comp Mole Frac (CO)	0.2524	0.2524	0.2524	0.1292 *	0.0000
Master Comp Mole Frac (CO2)	0.0905	0.0905	0.0905	0.2589 *	0.6610
Master Comp Mole Frac (Methanol)	0.0000	0.0000	0.0000	0.0041 *	0.0000
Master Comp Mole Frac (diM-Ether)	0.0000	0.0000	0.0000	0.0001 *	0.0008
Master Comp Mole Frac (1-Propanol)	0.0000	0.0000	0.0000	0.0000 *	0.0000

Name	28	O2-IN-1	WATER-OUT-1	CO2-OUT	COMB-PROD-2
Master Comp Mole Frac (H2O)	0.3378	0.0000 *	0.9994	0.0259	0.6666
Master Comp Mole Frac (Oxygen)	0.0004	1.0000 *	0.0000	0.0002	0.0000
Master Comp Mole Frac (Hydrogen)	0.0000	0.0000 *	0.0000	0.0000	0.0000
Master Comp Mole Frac (CO)	0.0000	0.0000 *	0.0000	0.0000	0.0000
Master Comp Mole Frac (CO2)	0.6610	0.0000 *	0.0006	0.9735	0.3333
Master Comp Mole Frac (Methanol)	0.0000	0.0000 *	0.0000	0.0000	0.0000
Master Comp Mole Frac (diM-Ether)	0.0008	0.0000 *	0.0000	0.0002	0.0000
Master Comp Mole Frac (1-Propanol)	0.0000	0.0000 *	0.0000	0.0001	0.0001

Workbook: Case (Main) (continued)

Composition (continued)

Fluid Pkg: All

Name	16	29	O2-IN-2		
Master Comp Mole Frac (H2O)	---	0.6666	0.0000 *		
Master Comp Mole Frac (Oxygen)	---	0.0000	1.0000 *		
Master Comp Mole Frac (Hydrogen)	---	0.0000	0.0000 *		
Master Comp Mole Frac (CO)	---	0.0000	0.0000 *		
Master Comp Mole Frac (CO2)	---	0.3333	0.0000 *		
Master Comp Mole Frac (Methanol)	---	0.0000	0.0000 *		
Master Comp Mole Frac (diM-Ether)	---	0.0000	0.0000 *		
Master Comp Mole Frac (1-Propanol)	---	0.0001	0.0000 *		

Unit Ops

Operation Name	Operation Type	Feeds	Products	Ignored	Calc Level
COMP-2	Compressor	12 COMP-2 W	SYNG-3	No	500.0 *
Syngas Circulator	Compressor	6 Circ Pwr	10	No	500.0 *
SG CMP STG4	Compressor	24 STG4 PWR	26	No	500.0 *
SG CMP STG1	Compressor	SYNG-1 ST1 PWR	19	No	500.0 *
SG CMP STG2	Compressor	20 ST2 PWR	21	No	500.0 *
SG CMP STG3	Compressor	22 ST3 PWR	23	No	500.0 *
SG CMP STG 5	Compressor	27 STG5 PWR	SYNG-2	No	500.0 *
M3	Mixer	SYNG-2 M-RECY2	1	No	500.0 *
MIX-100	Mixer	LT-GAS-1 PURGE-2	LT-GAS	No	500.0 *
M1	Mixer	WATER-IN CO2-IN SYNG-RCY	8	No	500.0 *
M2	Mixer	14 10	SYNG-RCY	No	500.0 *
HX	LNG	SYNG-3 MEOH-2	SYNG-5 MEOH-4	No	500.0 *
Hi Temp Recup	LNG	H2,CO,H2O Out 5 Hot O2	25 4 Warm O2	No	500.0 *
Lo Temp Recup	LNG	25 17 Warm O2	11 18 O2-OUT	No	500.0 *
MEOH-1	Equilibrium Reactor	SYNG-5 MEOH-1 Q	2 Vap Out MEOH-1 Q	No	500.0 *
RWGS 1	Equilibrium Reactor	9	400 CO2, Water In	No	500.0 *
MEOH-2	Conversion Reactor	Vap Out	3 MEOH-2	No	500.0 *
COMB-1	Conversion Reactor	LT-GAS O2-IN-1	28 COMB-PROD	No	500.0 *

Workbook: Case (Main) (continued)

Unit Ops (continued)

Operation Name	Operation Type	Feeds	Products	Ignored	Calc Level
COMB-1	Conversion Reactor	COMB-Q-1	COMB-Q-1	No	500.0 *
COMB-2	Conversion Reactor	MEOH-9	29	No	500.0 *
		O2-IN-2	COMB-PROD-2		
		COMB-Q-2	COMB-Q-2		
KO-DRM	Separator	MEOH-5	MEOH-6	No	500.0 *
			M-RECY		
Water Knockout Tank	Separator	7	13	No	500.0 *
		Amb Q	SYNG-1		
			Amb Q		
KO-DRM 2	Separator	COMB-PROD	WATER-OUT-1	No	500.0 *
		COMB-PROD-2	CO2-OUT		
		AMB-Q-1	AMB-Q-1		
CONDNSR	Cooler	MEOH-4	MEOH-5	No	500.0 *
			COND Q		
INT CLR 1	Cooler	19	20	No	500.0 *
			IC1 Q		
INT CLR 2	Cooler	21	22	No	500.0 *
			IC2 Q		
INT CLR 3	Cooler	23	24	No	500.0 *
			IC3 Q		
INT CLR 4	Cooler	26	27	No	500.0 *
			IC4 Q		
VALVE-3	Valve	MEOH-6	MEOH-7	No	500.0 *
VALVE-2	Valve	PURGE-1	PURGE-2	No	500.0 *
T-100	Distillation	MEOH-7	MEOH-8	No	2500 *
		RB1 Q	LT-GAS-1		
			CND1 Q		
T-101	Distillation	MEOH-8	WATER-OUT-2	No	2500 *
		RB2 Q	MEOH-9		
			CND2 Q		
RCY-4	Recycle	8	17	No	3500 *
RCY-1	Recycle	1	12	No	3500 *
TEE-100	Tee	M-RECY	M-RECY2	No	500.0 *
			PURGE-1		
T1	Tee	11	6	No	500.0 *
			7		
High Temperature Co-Electrol	Standard Sub-Flowsheet	Sweep Gas In	Hot O2	No	2500 *
		CO2, Water In	H2,CO,H2O Out		
		Process Heat			
		Electrolysis Power			
Topping Heat	Heater	4	9	No	500.0 *
		Top Heat Q			
Preheater	Heater	18	5	No	500.0 *
		Preheat Q			
SPRDSHT-1	Spreadsheet			No	500.0 *
Water Pump	Pump	13	14	No	500.0 *
		Water Pump Pwr			

Honeywell	Company Name Not Available Calgary, Alberta CANADA	Case Name: \\vmware-host\...\PSA Results\MeOH Production w Comb ratio 2_5.usc Unit Set: NASA Date/Time: Wednesday Feb 16 2011, 9:58:39

Workbook: High Temperature Co-Electrolysis (TPL2)

Streams

Fluid Pkg: All

Name		Sweep Gas In @TPL2	O2 Out @TPL2	Gas Products @TPL2	Liquid @TPL2	Anode @TPL2
Vapour Fraction		1.0000	1.0000	1.0000	0.0000	1.0000
Temperature	(C)	800.3	800.0	800.0 *	800.0	800.0
Pressure	(kPa)	135.1	135.1	136.5	136.5	135.1
Molar Flow	(gmole/h)	1.000e-010	1.220	5.027	0.0000	1.220
Mass Flow	(kg/d)	4.357e-011	0.9366	2.183	0.0000	0.9366
Liquid Volume Flow	(m3/h)	1.815e-015	3.430e-005	1.690e-004	0.0000	3.430e-005
Heat Flow	(kW)	-5.841e-012	8.554e-003	-7.463e-002	-0.0000	8.554e-003
Molar Enthalpy	(kJ/kgmole)	-2.103e+005	2.525e+004	-5.345e+004	-5.345e+004	2.525e+004
Name		H2,CO,H2O Out @TP	Cathode @TPL2	2 @TPL2	CO2, Water In @TPL2	Electrolysis Heatiing @
Vapour Fraction		1.0000	1.0000	0.0000	1.0000	---
Temperature	(C)	800.0 *	800.0 *	800.0	800.3	---
Pressure	(kPa)	135.1	135.1	135.1	137.9	---
Molar Flow	(gmole/h)	3.807	3.807	0.0000	3.807	---
Mass Flow	(kg/d)	1.246	1.246	0.0000	2.183	---
Liquid Volume Flow	(m3/h)	1.144e-004	1.347e-004	0.0000	1.083e-004	---
Heat Flow	(kW)	-7.644e-002	-8.319e-002	-0.0000	-0.2428	0.1681
Molar Enthalpy	(kJ/kgmole)	-7.228e+004	-7.865e+004	-7.228e+004	-2.296e+005	---
Name		Process Heat @TPL2	Shift Reactor 2 Heat @	Electrolysis Power @T		
Vapour Fraction		---	---	---		
Temperature	(C)	---	---	---		
Pressure	(kPa)	---	---	---		
Molar Flow	(gmole/h)	---	---	---		
Mass Flow	(kg/d)	---	---	---		
Liquid Volume Flow	(m3/h)	---	---	---		
Heat Flow	(kW)	5.311e-013	6.742e-003	0.1749		
Molar Enthalpy	(kJ/kgmole)	---	---	---		

Composition

Fluid Pkg: All

Name	Sweep Gas In @TPL2	O2 Out @TPL2	Gas Products @TPL2	Liquid @TPL2	Anode @TPL2
Comp Mole Frac (H2O)	0.9900	0.0000	0.0000	0.0000	0.0000
Comp Mole Frac (Oxygen)	0.0100	1.0000	0.2426	0.2426	1.0000
Comp Mole Frac (Hydrogen)	0.0000	0.0000	0.5397	0.5396	0.0000
Comp Mole Frac (CO)	0.0000	0.0000	0.0213	0.0213	0.0000
Comp Mole Frac (CO2)	0.0000	0.0000	0.1964	0.1964	0.0000
Comp Mole Frac (Methanol)	0.0000	0.0000	0.0000	0.0000	0.0000
Comp Mole Frac (diM-Ether)	0.0000	0.0000	0.0000	0.0000	0.0000
Comp Mole Frac (1-Propanol)	0.0000	0.0000	0.0000	0.0000	0.0000
Name	H2,CO,H2O Out @TP	Cathode @TPL2	2 @TPL2	CO2, Water In @TPL2	
Comp Mole Frac (H2O)	0.1834	0.0000	0.1834	0.6407	
Comp Mole Frac (Oxygen)	0.0000	0.0000	0.0000	0.0000	
Comp Mole Frac (Hydrogen)	0.5291	0.7125	0.5291	0.0718	
Comp Mole Frac (CO)	0.2116	0.0281	0.2116	0.0281	
Comp Mole Frac (CO2)	0.0759	0.2593	0.0759	0.2593	
Comp Mole Frac (Methanol)	0.0000	0.0000	0.0000	0.0000	
Comp Mole Frac (diM-Ether)	0.0000	0.0000	0.0000	0.0000	
Comp Mole Frac (1-Propanol)	0.0000	0.0000	0.0000	0.0000	

Unit Ops

Operation Name	Operation Type	Feeds	Products	Ignored	Calc Level
Temp Average ASR @TPL2	Spreadsheet			Yes	500.0 *
Electrolysis Spreadsheet @TF	Spreadsheet			No	500.0 *

Workbook: High Temperature Co-Electrolysis (TPL2) (continued)

Unit Ops (continued)

Operation Name	Operation Type	Feeds	Products	Ignored	Calc Level
Steam Electrolysis @TPL2	Spreadsheet			No	500.0 *
CO2 Electrolysis @TPL2	Spreadsheet			No	500.0 *
Sweep Gas/O2 Mixer @TPL2	Mixer	Anode @TPL2	O2 Out @TPL2	No	500.0 *
		Sweep Gas In @TPL2			
Isothermal Electrolysis @TPL2	Conversion Reactor	CO2, Water In @TPL2	Liquid @TPL2	No	500.0 *
		Electrolysis Heatiing @TPL2	Gas Products @TPL2		
			Electrolysis Heatiing @TPL2		
Electrodes @TPL2	Component Splitter	Gas Products @TPL2	Cathode @TPL2	No	500.0 *
			Anode @TPL2		
ERV-100 @TPL2	Equilibrium Reactor	Cathode @TPL2	2 @TPL2	No	500.0 *
		Shift Reactor 2 Heat @TPL2	H2,CO,H2O Out @TPL2		
			Shift Reactor 2 Heat @TPL2		
SET-1 @TPL2	Set			No	500.0 *
SET-3 @TPL2	Set			No	500.0 *
SET-2 @TPL2	Set			No	500.0 *
ADJ-1 @TPL2	Adjust			No	3500 *

Workbook: T-100 (COL1)

Material Streams

Fluid Pkg: All

Name		Reflux @COL1	To Condenser @COL1	Boilup @COL1	To Reboiler @COL1	MEOH-8 @COL1
Vapour Fraction		0.0000	1.0000	1.0000	0.0000	0.0000
Temperature	(C)	8.386	59.71	77.28	76.22	77.28
Pressure	(kPa)	137.9	137.9	137.9	137.9	137.9
Molar Flow	(gmole/h)	0.1758	0.2930	0.3135	1.262	0.9484
Mass Flow	(kg/d)	0.1358	0.2552	0.2375	0.9103	0.6728
Liquid Volume Flow	(m3/h)	7.109e-006	1.322e-005	1.239e-005	4.685e-005	3.446e-005
Heat Flow	(kW)	-1.189e-002	-2.202e-002	-1.746e-002	-8.495e-002	-6.430e-002
Name		LT-GAS-1 @COL1	MEOH-7 @COL1			
Vapour Fraction		1.0000	0.1059			
Temperature	(C)	8.386	29.47			
Pressure	(kPa)	137.9	206.8			
Molar Flow	(gmole/h)	0.1172	1.066			
Mass Flow	(kg/d)	0.1194	0.7922			
Liquid Volume Flow	(m3/h)	6.106e-006	4.056e-005			
Heat Flow	(kW)	-1.221e-002	-7.762e-002			

Compositions

Fluid Pkg: All

Name	Reflux @COL1	To Condenser @COL1	Boilup @COL1	To Reboiler @COL1	MEOH-8 @COL1
Comp Mole Frac (H2O)	0.0000	0.0000	0.0338	0.1418	0.1775
Comp Mole Frac (Oxygen)	0.0000	0.0000	0.0000	0.0000	0.0000
Comp Mole Frac (Hydrogen)	0.0000	0.0088	0.0000	0.0000	0.0000
Comp Mole Frac (CO)	0.0000	0.0017	0.0000	0.0000	0.0000
Comp Mole Frac (CO2)	0.0122	0.3766	0.0000	0.0000	0.0000
Comp Mole Frac (Methanol)	0.9876	0.6122	0.9661	0.8581	0.8224
Comp Mole Frac (diM-Ether)	0.0002	0.0007	0.0000	0.0000	0.0000
Comp Mole Frac (1-Propanol)	0.0000	0.0000	0.0001	0.0001	0.0001

Workbook: T-100 (COL1) (continued)

Compositions (continued)

Fluid Pkg: All

Name	LT-GAS-1 @COL1	MEOH-7 @COL1			
Comp Mole Frac (H2O)	0.0000	0.1579			
Comp Mole Frac (Oxygen)	0.0000	0.0000			
Comp Mole Frac (Hydrogen)	0.0220	0.0024			
Comp Mole Frac (CO)	0.0043	0.0005			
Comp Mole Frac (CO2)	0.9232	0.1016			
Comp Mole Frac (Methanol)	0.0490	0.7373			
Comp Mole Frac (diM-Ether)	0.0016	0.0002			
Comp Mole Frac (1-Propanol)	0.0000	0.0001			

Energy Streams

Fluid Pkg: All

Name		CND1 Q @COL1	RB1 Q @COL1			
Heat Flow	(kW)	2.076e-003	3.192e-003			

Unit Ops

Operation Name	Operation Type	Feeds	Products	Ignored	Calc Level
Condenser @COL1	Partial Condenser	To Condenser @COL1 CND1 Q @COL1	LT-GAS-1 @COL1 Reflux @COL1 CND1 Q @COL1	No	500.0 *
Reboiler @COL1	Reboiler	To Reboiler @COL1 RB1 Q @COL1	MEOH-8 @COL1 Boilup @COL1	No	500.0 *
Main TS @COL1	Tray Section	Reflux @COL1 Boilup @COL1 MEOH-7 @COL1	To Reboiler @COL1 To Condenser @COL1	No	500.0 *

Workbook: T-101 (COL2)

Material Streams

Fluid Pkg: All

Name		Reflux @COL2	To Condenser @COL2	Boilup @COL2	To Reboiler @COL2	MEOH-9 @COL2
Vapour Fraction		0.0000	1.0000	1.0000	0.0000	0.0000
Temperature	(C)	40.00	72.51	108.6	108.4	40.00
Pressure	(kPa)	137.9	137.9	137.9	137.9	137.9
Molar Flow	(gmole/h)	0.7663	1.540	1.445	1.620	0.7741
Mass Flow	(kg/d)	0.5894	1.185	0.6476	0.7250	0.5953
Liquid Volume Flow	(m3/h)	3.086e-005	6.204e-005	2.759e-005	3.087e-005	3.117e-005
Heat Flow	(kW)	-5.078e-002	-8.529e-002	-9.520e-002	-0.1250	-5.129e-002
Name		WATER-2 @COL2	MEOH-8 @COL2			
Vapour Fraction		0.0000	0.0000			
Temperature	(C)	108.6	77.28			
Pressure	(kPa)	137.9	137.9			
Molar Flow	(gmole/h)	0.1744	0.9484			
Mass Flow	(kg/d)	7.742e-002	0.6728			
Liquid Volume Flow	(m3/h)	3.282e-006	3.446e-005			
Heat Flow	(kW)	-1.348e-002	-6.430e-002			

Workbook: T-101 (COL2) (continued)

Compositions

Fluid Pkg: All

Name	Reflux @COL2	To Condenser @COL2	Boilup @COL2	To Reboiler @COL2	MEOH-9 @COL2
Comp Mole Frac (H2O)	0.0000	0.0000	0.9533	0.9546	0.0000
Comp Mole Frac (Oxygen)	0.0000	0.0000	0.0000	0.0000	0.0000
Comp Mole Frac (Hydrogen)	0.0000	0.0000	0.0000	0.0000	0.0000
Comp Mole Frac (CO)	0.0000	0.0000	0.0000	0.0000	0.0000
Comp Mole Frac (CO2)	0.0000	0.0000	0.0000	0.0000	0.0000
Comp Mole Frac (Methanol)	0.9998	0.9998	0.0467	0.0454	0.9998
Comp Mole Frac (diM-Ether)	0.0000	0.0000	0.0000	0.0000	0.0000
Comp Mole Frac (1-Propanol)	0.0002	0.0002	0.0000	0.0000	0.0002

Name	WATER-2 @COL2	MEOH-8 @COL2
Comp Mole Frac (H2O)	0.9652	0.1775
Comp Mole Frac (Oxygen)	0.0000	0.0000
Comp Mole Frac (Hydrogen)	0.0000	0.0000
Comp Mole Frac (CO)	0.0000	0.0000
Comp Mole Frac (CO2)	0.0000	0.0000
Comp Mole Frac (Methanol)	0.0348	0.8224
Comp Mole Frac (diM-Ether)	0.0000	0.0000
Comp Mole Frac (1-Propanol)	0.0000	0.0001

Energy Streams

Fluid Pkg: All

Name		CND2 Q @COL2	RB2 Q @COL2
Heat Flow	(kW)	1.678e-002	1.631e-002

Unit Ops

Operation Name	Operation Type	Feeds	Products	Ignored	Calc Level
Reboiler @COL2	Reboiler	To Reboiler @COL2 RB2 Q @COL2	WATER-2 @COL2 Boilup @COL2	No	500.0 *
Main TS @COL2	Tray Section	Reflux @COL2 Boilup @COL2 MEOH-8 @COL2	To Reboiler @COL2 To Condenser @COL2	No	500.0 *
Condenser @COL2	Total Condenser	To Condenser @COL2 CND2 Q @COL2	MEOH-9 @COL2 Reflux @COL2 CND2 Q @COL2	No	500.0 *

Workbook: Case (Main)

Streams

Fluid Pkg: All

Name		SYNG-2	M-RECY2	1	SYNG-3	SYNG-5
Vapour Fraction		1.0000	1.0000	1.0000	1.0000	1.0000
Temperature	(C)	174.9	40.00	88.29	98.50	216.7 *
Pressure	(kPa)	7501 *	6977	6977	7515 *	7460
Molar Flow	(gmole/h)	3.213	5.922	9.136	9.136	9.136
Mass Flow	(kg/d)	0.8623	0.7634	1.626	1.626	1.626
Std Ideal Liq Vol Flow	(m3/h)	1.017e-004	1.817e-004	2.834e-004	2.834e-004	2.834e-004
Heat Flow	(kW)	-4.799e-002	-4.789e-002	-9.588e-002	-9.509e-002	-8.595e-002
Molar Enthalpy	(kJ/kgmole)	-5.377e+004	-2.911e+004	-3.778e+004	-3.747e+004	-3.387e+004
Name		MEOH-2	MEOH-4	Vap Out	2	3
Vapour Fraction		1.0000	0.9564	1.0000	0.0000	0.0000
Temperature	(C)	226.8	139.1	226.7 *	226.7	226.8
Pressure	(kPa)	7060	7005	7060	7060	7060
Molar Flow	(gmole/h)	7.311	7.311	7.311	0.0000	0.0000
Mass Flow	(kg/d)	1.626	1.626	1.626	0.0000	0.0000
Std Ideal Liq Vol Flow	(m3/h)	2.300e-004	2.300e-004	2.300e-004	0.0000	0.0000
Heat Flow	(kW)	-0.1084	-0.1175	-0.1084	-0.0000	-0.0000
Molar Enthalpy	(kJ/kgmole)	-5.338e+004	-5.788e+004	-5.338e+004	-2.228e+005	-2.228e+005
Name		MEOH-6	MEOH-5	MEOH-7	MEOH-8	LT-GAS-1
Vapour Fraction		0.0000	0.8352	0.0163	0.0000	1.0000
Temperature	(C)	40.00	40.00 *	40.64	78.98	40.14
Pressure	(kPa)	6977	6977	206.8 *	137.9	137.9
Molar Flow	(gmole/h)	1.205	7.311	1.205	1.174	3.133e-002
Mass Flow	(kg/d)	0.8386	1.626	0.8386	0.8114	2.716e-002
Std Ideal Liq Vol Flow	(m3/h)	4.273e-005	2.300e-004	4.273e-005	4.125e-005	1.478e-006
Heat Flow	(kW)	-8.421e-002	-0.1336	-8.421e-002	-8.040e-002	-2.579e-003
Molar Enthalpy	(kJ/kgmole)	-2.516e+005	-6.578e+004	-2.516e+005	-2.466e+005	-2.963e+005
Name		M-RECY	PURGE-1	PURGE-2	LT-GAS	WATER-OUT-2
Vapour Fraction		1.0000	1.0000	1.0000	1.0000	0.0000
Temperature	(C)	40.00	40.00	39.45	39.38	108.6
Pressure	(kPa)	6977	6977	137.9	137.9	137.9
Molar Flow	(gmole/h)	6.106	0.1832	0.1832	0.2145	0.2627
Mass Flow	(kg/d)	0.7870	2.361e-002	2.361e-002	5.077e-002	0.1165
Std Ideal Liq Vol Flow	(m3/h)	1.873e-004	5.619e-006	5.619e-006	7.098e-006	4.935e-006
Heat Flow	(kW)	-4.937e-002	-1.481e-003	-1.481e-003	-4.060e-003	-2.031e-002
Molar Enthalpy	(kJ/kgmole)	-2.911e+004	-2.911e+004	-2.911e+004	-6.813e+004	-2.783e+005
Name		MEOH-9	CO2, Water In	H2,CO,H2O Out	9	Sweep Gas In
Vapour Fraction		0.0000	1.0000	1.0000	1.0000	1.0000
Temperature	(C)	40.00	800.3	800.0	800.0 *	800.3
Pressure	(kPa)	137.9	137.9	135.1	137.9	135.1
Molar Flow	(gmole/h)	0.9110	4.324	4.324	4.324	1.000e-010 *
Mass Flow	(kg/d)	0.6950	2.382	1.264	2.382	4.357e-011
Std Ideal Liq Vol Flow	(m3/h)	3.631e-005	1.180e-004	1.282e-004	1.179e-004	1.815e-015
Heat Flow	(kW)	-6.061e-002	-0.2697	-7.217e-002	-0.2697	-5.841e-012
Molar Enthalpy	(kJ/kgmole)	-2.395e+005	-2.245e+005	-6.008e+004	-2.245e+005	-2.103e+005

Workbook: Case (Main) (continued)

Streams (continued)

Fluid Pkg: All

Name		Hot O2	400	8	Warm O2	25
Vapour Fraction		1.0000	0.0000	0.3396	1.0000	1.0000
Temperature	(C)	800.0	800.3	34.17	122.0	168.3
Pressure	(kPa)	135.1	137.9	137.9	135.1	135.1
Molar Flow	(gmole/h)	1.455	0.0000	4.324	1.455	4.324
Mass Flow	(kg/d)	1.118	0.0000	2.382	1.118	1.264
Std Ideal Liq Vol Flow	(m3/h)	4.094e-005	0.0000	1.179e-004	4.094e-005	1.282e-004
Heat Flow	(kW)	1.021e-002	-0.0000	-0.3404	1.160e-003	-9.698e-002
Molar Enthalpy	(kJ/kgmole)	2.525e+004	-2.245e+005	-2.834e+005	2869	-8.074e+004
Name		WATER-IN	CO2-IN	4	5	6
Vapour Fraction		0.0000	1.0000	1.0000	0.9663	1.0000
Temperature	(C)	21.00 *	21.00 *	775.0 *	97.00 *	122.0 *
Pressure	(kPa)	137.9	137.9 *	137.9	137.9	135.1
Molar Flow	(gmole/h)	2.267	0.9468	4.324	4.324	0.5591
Mass Flow	(kg/d)	0.9800 *	1.000 *	2.382	2.382	0.1635
Std Ideal Liq Vol Flow	(m3/h)	4.092e-005	5.048e-005	1.179e-004	1.179e-004	1.658e-005
Heat Flow	(kW)	-0.1802	-0.1036	-0.2710	-0.3048	-1.276e-002
Molar Enthalpy	(kJ/kgmole)	-2.862e+005	-3.940e+005	-2.256e+005	-2.538e+005	-8.215e+004
Name		7	10	SYNG-1	13	14
Vapour Fraction		1.0000	1.0000	1.0000	0.0000	0.0000
Temperature	(C)	122.0	124.9	26.67 *	26.67	26.67
Pressure	(kPa)	135.1	137.9	135.1	135.1	137.9
Molar Flow	(gmole/h)	3.765	0.5591	3.213	0.5517	0.5517
Mass Flow	(kg/d)	1.101	0.1635	0.8623	0.2385	0.2385
Std Ideal Liq Vol Flow	(m3/h)	1.116e-004	1.658e-005	1.017e-004	9.960e-006	9.960e-006
Heat Flow	(kW)	-8.592e-002	-1.275e-002	-5.188e-002	-4.379e-002	-4.379e-002
Molar Enthalpy	(kJ/kgmole)	-8.215e+004	-8.207e+004	-5.812e+004	-2.858e+005	-2.858e+005
Name		SYNG-RCY	O2-OUT	18	17	11
Vapour Fraction		0.4952	1.0000	0.3619	0.3396	1.0000
Temperature	(C)	61.41	59.17	51.66	34.17 *	122.0
Pressure	(kPa)	137.9	135.1	137.9	137.9 *	135.1
Molar Flow	(gmole/h)	1.111	1.455	4.324	4.324 *	4.324
Mass Flow	(kg/d)	0.4020	1.118	2.382	2.382	1.264
Std Ideal Liq Vol Flow	(m3/h)	2.654e-005	4.094e-005	1.179e-004	1.179e-004	1.282e-004
Heat Flow	(kW)	-5.654e-002	4.011e-004	-0.3379	-0.3404	-9.868e-002
Molar Enthalpy	(kJ/kgmole)	-1.832e+005	992.3	-2.813e+005	-2.834e+005	-8.215e+004
Name		19	20	21	22	23
Vapour Fraction		1.0000	1.0000	1.0000	1.0000 *	1.0000
Temperature	(C)	176.7 *	54.44 *	176.7 *	64.28	176.7 *
Pressure	(kPa)	421.6	421.6	1020	1020	2266
Molar Flow	(gmole/h)	3.213	3.213	3.213	3.213	3.213
Mass Flow	(kg/d)	0.8623	0.8623	0.8623	0.8623	0.8623
Std Ideal Liq Vol Flow	(m3/h)	1.017e-004	1.017e-004	1.017e-004	1.017e-004	1.017e-004
Heat Flow	(kW)	-4.790e-002	-5.116e-002	-4.791e-002	-5.092e-002	-4.792e-002
Molar Enthalpy	(kJ/kgmole)	-5.367e+004	-5.732e+004	-5.367e+004	-5.704e+004	-5.368e+004

Workbook: Case (Main) (continued)

Streams (continued)

Fluid Pkg: All

Name		24	26	27	12	COMB-PROD
Vapour Fraction		1.0000 *	1.0000	1.0000 *	1.0000	1.0000
Temperature	(C)	81.26	176.7 *	95.52	88.29 *	1000 *
Pressure	(kPa)	2266	4382	4382	6977 *	137.9
Molar Flow	(gmole/h)	3.213	3.213	3.213	9.136 *	0.2328
Mass Flow	(kg/d)	0.8623	0.8623	0.8623	1.626	0.1268
Std Ideal Liq Vol Flow	(m3/h)	1.017e-004	1.017e-004	1.017e-004	2.834e-004	5.769e-006
Heat Flow	(kW)	-5.049e-002	-4.793e-002	-5.014e-002	-9.587e-002	-1.471e-002
Molar Enthalpy	(kJ/kgmole)	-5.657e+004	-5.370e+004	-5.618e+004	-3.778e+004	-2.275e+005
Name		28	O2-IN-1	WATER-OUT-1	CO2-OUT	COMB-PROD-2
Vapour Fraction		0.0000	1.0000	0.0000	1.0000	1.0000
Temperature	(C)	1000	15.56 *	26.67	26.67 *	1000 *
Pressure	(kPa)	137.9	137.9 *	137.9	137.9	137.9
Molar Flow	(gmole/h)	0.0000	9.896e-002	1.968	0.9657	2.700
Mass Flow	(kg/d)	0.0000	0.0760 *	0.8515	1.001	1.726
Std Ideal Liq Vol Flow	(m3/h)	0.0000	2.783e-006	3.556e-005	5.051e-005	8.030e-005
Heat Flow	(kW)	-0.0000	-7.932e-006	-0.1562	-0.1041	-0.1881
Molar Enthalpy	(kJ/kgmole)	-2.275e+005	-288.6	-2.858e+005	-3.880e+005	-2.507e+005
Name		16	29	O2-IN-2	COMP-2 W	MEOH-1 Q
Vapour Fraction		---	0.0000	1.0000	---	---
Temperature	(C)	---	1000	26.67 *	---	---
Pressure	(kPa)	---	137.9	137.9 *	---	---
Molar Flow	(gmole/h)	---	0.0000	1.342	---	---
Mass Flow	(kg/d)	---	0.0000	1.031 *	---	---
Std Ideal Liq Vol Flow	(m3/h)	---	0.0000	3.776e-005	---	---
Heat Flow	(kW)	---	-0.0000	1.339e-005	7.842e-004	-2.245e-002
Molar Enthalpy	(kJ/kgmole)	---	-2.507e+005	35.92	---	---
Name		COND Q	CND1 Q	RB1 Q	CND2 Q	RB2 Q
Vapour Fraction		---	---	---	---	---
Temperature	(C)	---	---	---	---	---
Pressure	(kPa)	---	---	---	---	---
Molar Flow	(gmole/h)	---	---	---	---	---
Mass Flow	(kg/d)	---	---	---	---	---
Std Ideal Liq Vol Flow	(m3/h)	---	---	---	---	---
Heat Flow	(kW)	1.603e-002	5.120e-004	1.736e-003	2.222e-002	2.171e-002
Molar Enthalpy	(kJ/kgmole)	---	---	---	---	---
Name		Electrolysis Power	Process Heat	Top Heat Q	Preheat Q	Circ Pwr
Vapour Fraction		---	---	---	---	---
Temperature	(C)	---	---	---	---	---
Pressure	(kPa)	---	---	---	---	---
Molar Flow	(gmole/h)	---	---	---	---	---
Mass Flow	(kg/d)	---	---	---	---	---
Std Ideal Liq Vol Flow	(m3/h)	---	---	---	---	---
Heat Flow	(kW)	0.2077	4.462e-011	1.315e-003	3.307e-002	1.378e-005
Molar Enthalpy	(kJ/kgmole)	---	---	---	---	---

Workbook: Case (Main) (continued)

Streams (continued)

Fluid Pkg: All

Name		Amb Q	Water Pump Pwr	ST1 PWR	IC1 Q	IC2 Q
Vapour Fraction		---	---	---	---	---
Temperature	(C)	---	---	---	---	---
Pressure	(kPa)	---	---	---	---	---
Molar Flow	(gmole/h)	---	---	---	---	---
Mass Flow	(kg/d)	---	---	---	---	---
Std Ideal Liq Vol Flow	(m3/h)	---	---	---	---	---
Heat Flow	(kW)	-9.754e-003	1.009e-008	3.980e-003	3.258e-003	3.009e-003
Molar Enthalpy	(kJ/kgmole)	---	---	---	---	---
Name		**ST2 PWR**	**ST3 PWR**	**IC3 Q**	**STG4 PWR**	**IC4 Q**
Vapour Fraction		---	---	---	---	---
Temperature	(C)	---	---	---	---	---
Pressure	(kPa)	---	---	---	---	---
Molar Flow	(gmole/h)	---	---	---	---	---
Mass Flow	(kg/d)	---	---	---	---	---
Std Ideal Liq Vol Flow	(m3/h)	---	---	---	---	---
Heat Flow	(kW)	3.254e-003	3.001e-003	2.576e-003	2.562e-003	2.215e-003
Molar Enthalpy	(kJ/kgmole)	---	---	---	---	---
Name		**STG5 PWR**	**COMB-Q-1**	**AMB-Q-1**	**COMB-Q-2**	
Vapour Fraction		---	---	---	---	
Temperature	(C)	---	---	---	---	
Pressure	(kPa)	---	---	---	---	
Molar Flow	(gmole/h)	---	---	---	---	
Mass Flow	(kg/d)	---	---	---	---	
Std Ideal Liq Vol Flow	(m3/h)	---	---	---	---	
Heat Flow	(kW)	2.152e-003	-1.065e-002	-5.750e-002	-0.1275	
Molar Enthalpy	(kJ/kgmole)	---	---	---	---	

Composition

Fluid Pkg: All

Name	SYNG-2	M-RECY2	1	SYNG-3	SYNG-5
Master Comp Mole Frac (H2O)	0.0260	0.0003	0.0093	0.0093	0.0093
Master Comp Mole Frac (Oxygen)	0.0000	0.0000	0.0000	0.0000	0.0000
Master Comp Mole Frac (Hydrogen)	0.6794	0.9142	0.8316	0.8316	0.8316
Master Comp Mole Frac (CO)	0.2265	0.0112	0.0869	0.0869	0.0869
Master Comp Mole Frac (CO2)	0.0681	0.0690	0.0687	0.0687	0.0687
Master Comp Mole Frac (Methanol)	0.0000	0.0051	0.0033	0.0033	0.0033
Master Comp Mole Frac (diM-Ether)	0.0000	0.0002	0.0001	0.0001	0.0001
Master Comp Mole Frac (1-Propanol)	0.0000	0.0000	0.0000	0.0000	0.0000
Name	**MEOH-2**	**MEOH-4**	**Vap Out**	**2**	**3**
Master Comp Mole Frac (H2O)	0.0373	0.0373	0.0372	0.3201	0.3206
Master Comp Mole Frac (Oxygen)	0.0000	0.0000	0.0000	0.0000	0.0000
Master Comp Mole Frac (Hydrogen)	0.7640	0.7640	0.7640	0.0534	0.0535
Master Comp Mole Frac (CO)	0.0094	0.0094	0.0094	0.0008	0.0008
Master Comp Mole Frac (CO2)	0.0602	0.0602	0.0602	0.0205	0.0205
Master Comp Mole Frac (Methanol)	0.1289	0.1289	0.1290	0.6050	0.6043
Master Comp Mole Frac (diM-Ether)	0.0002	0.0002	0.0002	0.0001	0.0002
Master Comp Mole Frac (1-Propanol)	0.0000	0.0000	0.0000	0.0000	0.0001

Workbook: Case (Main) (continued)

Composition (continued)

Fluid Pkg: All

Name	MEOH-6	MEOH-5	MEOH-7	MEOH-8	LT-GAS-1
Master Comp Mole Frac (H2O)	0.2249	0.0373	0.2249	0.2309	0.0000
Master Comp Mole Frac (Oxygen)	0.0000	0.0000	0.0000	0.0000	0.0000
Master Comp Mole Frac (Hydrogen)	0.0029	0.7640	0.0029	0.0000	0.1122
Master Comp Mole Frac (CO)	0.0001	0.0094	0.0001	0.0000	0.0035
Master Comp Mole Frac (CO2)	0.0160	0.0602	0.0160	0.0000	0.6157
Master Comp Mole Frac (Methanol)	0.7558	0.1289	0.7558	0.7689	0.2622
Master Comp Mole Frac (diM-Ether)	0.0002	0.0002	0.0002	0.0000	0.0063
Master Comp Mole Frac (1-Propanol)	0.0001	0.0000	0.0001	0.0001	0.0000

Name	M-RECY	PURGE-1	PURGE-2	LT-GAS	WATER-OUT-2
Master Comp Mole Frac (H2O)	0.0003	0.0003	0.0003	0.0002	0.9669
Master Comp Mole Frac (Oxygen)	0.0000	0.0000	0.0000	0.0000	0.0000
Master Comp Mole Frac (Hydrogen)	0.9142	0.9142	0.9142	0.7971	0.0000
Master Comp Mole Frac (CO)	0.0112	0.0112	0.0112	0.0101	0.0000
Master Comp Mole Frac (CO2)	0.0690	0.0690	0.0690	0.1488	0.0000
Master Comp Mole Frac (Methanol)	0.0051	0.0051	0.0051	0.0427	0.0331
Master Comp Mole Frac (diM-Ether)	0.0002	0.0002	0.0002	0.0011	0.0000
Master Comp Mole Frac (1-Propanol)	0.0000	0.0000	0.0000	0.0000	0.0000

Name	MEOH-9	CO2, Water In	H2,CO,H2O Out	9	Sweep Gas In
Master Comp Mole Frac (H2O)	0.0187	0.6732	0.1687	0.6736	0.9900 *
Master Comp Mole Frac (Oxygen)	0.0000	0.0000	0.0000	0.0000	0.0100 *
Master Comp Mole Frac (Hydrogen)	0.0000	0.0754	0.5798	0.0750	0.0000 *
Master Comp Mole Frac (CO)	0.0000	0.0246	0.1933	0.0250	0.0000 *
Master Comp Mole Frac (CO2)	0.0000	0.2269	0.0582	0.2265	0.0000 *
Master Comp Mole Frac (Methanol)	0.9811	0.0000	0.0000	0.0000	0.0000 *
Master Comp Mole Frac (diM-Ether)	0.0000	0.0000	0.0000	0.0000	0.0000 *
Master Comp Mole Frac (1-Propanol)	0.0002	0.0000	0.0000	0.0000	0.0000 *

Name	Hot O2	400	8	Warm O2	25
Master Comp Mole Frac (H2O)	0.0000	0.6732	0.6736	0.0000	0.1687
Master Comp Mole Frac (Oxygen)	1.0000	0.0000	0.0000	1.0000	0.0000
Master Comp Mole Frac (Hydrogen)	0.0000	0.0754	0.0750	0.0000	0.5798
Master Comp Mole Frac (CO)	0.0000	0.0246	0.0250	0.0000	0.1933
Master Comp Mole Frac (CO2)	0.0000	0.2269	0.2265	0.0000	0.0582
Master Comp Mole Frac (Methanol)	0.0000	0.0000	0.0000	0.0000	0.0000
Master Comp Mole Frac (diM-Ether)	0.0000	0.0000	0.0000	0.0000	0.0000
Master Comp Mole Frac (1-Propanol)	0.0000	0.0000	0.0000	0.0000	0.0000

Name	WATER-IN	CO2-IN	4	5	6
Master Comp Mole Frac (H2O)	1.0000 *	0.0000 *	0.6736	0.6736	0.1687
Master Comp Mole Frac (Oxygen)	0.0000 *	0.0000 *	0.0000	0.0000	0.0000
Master Comp Mole Frac (Hydrogen)	0.0000 *	0.0000 *	0.0750	0.0750	0.5798
Master Comp Mole Frac (CO)	0.0000 *	0.0000 *	0.0250	0.0250	0.1933
Master Comp Mole Frac (CO2)	0.0000 *	1.0000 *	0.2265	0.2265	0.0582
Master Comp Mole Frac (Methanol)	0.0000 *	0.0000 *	0.0000	0.0000	0.0000
Master Comp Mole Frac (diM-Ether)	0.0000 *	0.0000 *	0.0000	0.0000	0.0000
Master Comp Mole Frac (1-Propanol)	0.0000 *	0.0000 *	0.0000	0.0000	0.0000

Workbook: Case (Main) (continued)

Composition (continued)

Fluid Pkg: All

Name	7	10	SYNG-1	13	14
Master Comp Mole Frac (H2O)	0.1687	0.1687	0.0260	0.9999	0.9999
Master Comp Mole Frac (Oxygen)	0.0000	0.0000	0.0000	0.0000	0.0000
Master Comp Mole Frac (Hydrogen)	0.5798	0.5798	0.6794	0.0001	0.0001
Master Comp Mole Frac (CO)	0.1933	0.1933	0.2265	0.0000	0.0000
Master Comp Mole Frac (CO2)	0.0582	0.0582	0.0681	0.0000	0.0000
Master Comp Mole Frac (Methanol)	0.0000	0.0000	0.0000	0.0000	0.0000
Master Comp Mole Frac (diM-Ether)	0.0000	0.0000	0.0000	0.0000	0.0000
Master Comp Mole Frac (1-Propanol)	0.0000	0.0000	0.0000	0.0000	0.0000
Name	SYNG-RCY	O2-OUT	18	17	11
Master Comp Mole Frac (H2O)	0.5815	0.0000	0.6736	0.6736 *	0.1687
Master Comp Mole Frac (Oxygen)	0.0000	1.0000	0.0000	0.0000 *	0.0000
Master Comp Mole Frac (Hydrogen)	0.2919	0.0000	0.0750	0.0750 *	0.5798
Master Comp Mole Frac (CO)	0.0973	0.0000	0.0250	0.0250 *	0.1933
Master Comp Mole Frac (CO2)	0.0293	0.0000	0.2265	0.2265 *	0.0582
Master Comp Mole Frac (Methanol)	0.0000	0.0000	0.0000	0.0000 *	0.0000
Master Comp Mole Frac (diM-Ether)	0.0000	0.0000	0.0000	0.0000 *	0.0000
Master Comp Mole Frac (1-Propanol)	0.0000	0.0000	0.0000	0.0000 *	0.0000
Name	19	20	21	22	23
Master Comp Mole Frac (H2O)	0.0260	0.0260	0.0260	0.0260	0.0260
Master Comp Mole Frac (Oxygen)	0.0000	0.0000	0.0000	0.0000	0.0000
Master Comp Mole Frac (Hydrogen)	0.6794	0.6794	0.6794	0.6794	0.6794
Master Comp Mole Frac (CO)	0.2265	0.2265	0.2265	0.2265	0.2265
Master Comp Mole Frac (CO2)	0.0681	0.0681	0.0681	0.0681	0.0681
Master Comp Mole Frac (Methanol)	0.0000	0.0000	0.0000	0.0000	0.0000
Master Comp Mole Frac (diM-Ether)	0.0000	0.0000	0.0000	0.0000	0.0000
Master Comp Mole Frac (1-Propanol)	0.0000	0.0000	0.0000	0.0000	0.0000
Name	24	26	27	12	COMB-PROD
Master Comp Mole Frac (H2O)	0.0260	0.0260	0.0260	0.0093 *	0.8018
Master Comp Mole Frac (Oxygen)	0.0000	0.0000	0.0000	0.0000 *	0.0000
Master Comp Mole Frac (Hydrogen)	0.6794	0.6794	0.6794	0.8316 *	0.0115
Master Comp Mole Frac (CO)	0.2265	0.2265	0.2265	0.0869 *	0.0000
Master Comp Mole Frac (CO2)	0.0681	0.0681	0.0681	0.0687 *	0.1857
Master Comp Mole Frac (Methanol)	0.0000	0.0000	0.0000	0.0033 *	0.0000
Master Comp Mole Frac (diM-Ether)	0.0000	0.0000	0.0000	0.0001 *	0.0010
Master Comp Mole Frac (1-Propanol)	0.0000	0.0000	0.0000	0.0000 *	0.0000
Name	28	O2-IN-1	WATER-OUT-1	CO2-OUT	COMB-PROD-2
Master Comp Mole Frac (H2O)	0.8018	0.0000 *	0.9994	0.0259	0.6683
Master Comp Mole Frac (Oxygen)	0.0000	1.0000 *	0.0000	0.0018	0.0007
Master Comp Mole Frac (Hydrogen)	0.0115	0.0000 *	0.0000	0.0028	0.0000
Master Comp Mole Frac (CO)	0.0000	0.0000 *	0.0000	0.0000	0.0000
Master Comp Mole Frac (CO2)	0.1858	0.0000 *	0.0006	0.9691	0.3310
Master Comp Mole Frac (Methanol)	0.0000	0.0000 *	0.0000	0.0000	0.0000
Master Comp Mole Frac (diM-Ether)	0.0010	0.0000 *	0.0000	0.0002	0.0000
Master Comp Mole Frac (1-Propanol)	0.0000	0.0000 *	0.0000	0.0002	0.0001

Workbook: Case (Main) (continued)

Composition (continued)

Fluid Pkg: All

Name	16	29	O2-IN-2		
Master Comp Mole Frac (H2O)	---	0.6683	0.0000 *		
Master Comp Mole Frac (Oxygen)	---	0.0007	1.0000 *		
Master Comp Mole Frac (Hydrogen)	---	0.0000	0.0000 *		
Master Comp Mole Frac (CO)	---	0.0000	0.0000 *		
Master Comp Mole Frac (CO2)	---	0.3310	0.0000 *		
Master Comp Mole Frac (Methanol)	---	0.0000	0.0000 *		
Master Comp Mole Frac (diM-Ether)	---	0.0000	0.0000 *		
Master Comp Mole Frac (1-Propanol)	---	0.0001	0.0000 *		

Unit Ops

Operation Name	Operation Type	Feeds	Products	Ignored	Calc Level
COMP-2	Compressor	12 COMP-2 W	SYNG-3	No	500.0 *
Syngas Circulator	Compressor	6 Circ Pwr	10	No	500.0 *
SG CMP STG4	Compressor	24 STG4 PWR	26	No	500.0 *
SG CMP STG1	Compressor	SYNG-1 ST1 PWR	19	No	500.0 *
SG CMP STG2	Compressor	20 ST2 PWR	21	No	500.0 *
SG CMP STG3	Compressor	22 ST3 PWR	23	No	500.0 *
SG CMP STG 5	Compressor	27 STG5 PWR	SYNG-2	No	500.0 *
M3	Mixer	SYNG-2 M-RECY2	1	No	500.0 *
MIX-100	Mixer	LT-GAS-1 PURGE-2	LT-GAS	No	500.0 *
M1	Mixer	WATER-IN CO2-IN SYNG-RCY	8	No	500.0 *
M2	Mixer	14 10	SYNG-RCY	No	500.0 *
HX	LNG	SYNG-3 MEOH-2	SYNG-5 MEOH-4	No	500.0 *
Hi Temp Recup	LNG	H2,CO,H2O Out 5 Hot O2	25 4 Warm O2	No	500.0 *
Lo Temp Recup	LNG	25 17 Warm O2	11 18 O2-OUT	No	500.0 *
MEOH-1	Equilibrium Reactor	SYNG-5 MEOH-1 Q	2 Vap Out MEOH-1 Q	No	500.0 *
RWGS 1	Equilibrium Reactor	9	400 CO2, Water In	No	500.0 *
MEOH-2	Conversion Reactor	Vap Out	3 MEOH-2	No	500.0 *
COMB-1	Conversion Reactor	LT-GAS O2-IN-1	28 COMB-PROD	No	500.0 *

Workbook: Case (Main) (continued)

Unit Ops (continued)

Operation Name	Operation Type	Feeds	Products	Ignored	Calc Level
COMB-1	Conversion Reactor	COMB-Q-1	COMB-Q-1	No	500.0 *
COMB-2	Conversion Reactor	MEOH-9	29	No	500.0 *
		O2-IN-2	COMB-PROD-2		
		COMB-Q-2	COMB-Q-2		
KO-DRM	Separator	MEOH-5	MEOH-6	No	500.0 *
			M-RECY		
Water Knockout Tank	Separator	7	13	No	500.0 *
		Amb Q	SYNG-1		
			Amb Q		
KO-DRM 2	Separator	COMB-PROD	WATER-OUT-1	No	500.0 *
		COMB-PROD-2	CO2-OUT		
		AMB-Q-1	AMB-Q-1		
CONDNSR	Cooler	MEOH-4	MEOH-5	No	500.0 *
			COND Q		
INT CLR 1	Cooler	19	20	No	500.0 *
			IC1 Q		
INT CLR 2	Cooler	21	22	No	500.0 *
			IC2 Q		
INT CLR 3	Cooler	23	24	No	500.0 *
			IC3 Q		
INT CLR 4	Cooler	26	27	No	500.0 *
			IC4 Q		
VALVE-3	Valve	MEOH-6	MEOH-7	No	500.0 *
VALVE-2	Valve	PURGE-1	PURGE-2	No	500.0 *
Distillation Column 1	Distillation	MEOH-7	MEOH-8	No	2500 *
		RB1 Q	LT-GAS-1		
			CND1 Q		
Distillation Column 2	Distillation	MEOH-8	WATER-OUT-2	No	2500 *
		RB2 Q	MEOH-9		
			CND2 Q		
RCY-4	Recycle	8	17	No	3500 *
RCY-1	Recycle	1	12	No	3500 *
TEE-100	Tee	M-RECY	M-RECY2	No	500.0 *
			PURGE-1		
T1	Tee	11	6	No	500.0 *
			7		
High Temperature Co-Electrol	Standard Sub-Flowsheet	Sweep Gas In	Hot O2	No	2500 *
		CO2, Water In	H2,CO,H2O Out		
		Process Heat			
		Electrolysis Power			
Topping Heat	Heater	4	9	No	500.0 *
		Top Heat Q			
Preheater	Heater	18	5	No	500.0 *
		Preheat Q			
SPRDSHT-1	Spreadsheet			No	500.0 *
Water Pump	Pump	13	14	No	500.0 *
		Water Pump Pwr			

Honeywell	Company Name Not Available Calgary, Alberta CANADA	Case Name: \\vmware-host\...\PSA Results\MeOH Production w Comb ratio 3.usc Unit Set: NASA Date/Time: Wednesday Feb 16 2011, 10:00:08

Workbook: High Temperature Co-Electrolysis (TPL2)

Streams

Fluid Pkg: All

Name		Sweep Gas In @TPL2	O2 Out @TPL2	Gas Products @TPL2	Liquid @TPL2	Anode @TPL2
Vapour Fraction		1.0000	1.0000	1.0000	0.0000	1.0000
Temperature	(C)	800.3	800.0	800.0 *	800.0	800.0
Pressure	(kPa)	135.1	135.1	136.5	136.5	135.1
Molar Flow	(gmole/h)	1.000e-010	1.455	5.780	0.0000	1.455
Mass Flow	(kg/d)	4.357e-011	1.118	2.382	0.0000	1.118
Liquid Volume Flow	(m3/h)	1.815e-015	4.094e-005	1.904e-004	0.0000	4.094e-005
Heat Flow	(kW)	-5.841e-012	1.021e-002	-6.900e-002	-0.0000	1.021e-002
Molar Enthalpy	(kJ/kgmole)	-2.103e+005	2.525e+004	-4.298e+004	-4.298e+004	2.525e+004
Name		H2,CO,H2O Out @TP	Cathode @TPL2	2 @TPL2	CO2, Water In @TPL2	Electrolysis Heatiing @
Vapour Fraction		1.0000	1.0000	0.0000	1.0000	---
Temperature	(C)	800.0 *	800.0 *	800.0	800.3	---
Pressure	(kPa)	135.1	135.1	135.1	137.9	---
Molar Flow	(gmole/h)	4.324	4.324	0.0000	4.324	---
Mass Flow	(kg/d)	1.264	1.264	0.0000	2.382	---
Liquid Volume Flow	(m3/h)	1.282e-004	1.494e-004	0.0000	1.180e-004	---
Heat Flow	(kW)	-7.217e-002	-7.921e-002	-0.0000	-0.2697	0.2007
Molar Enthalpy	(kJ/kgmole)	-6.008e+004	-6.594e+004	-6.008e+004	-2.245e+005	---
Name		Process Heat @TPL2	Shift Reactor 2 Heat @	Electrolysis Power @T		
Vapour Fraction		---	---	---		
Temperature	(C)	---	---	---		
Pressure	(kPa)	---	---	---		
Molar Flow	(gmole/h)	---	---	---		
Mass Flow	(kg/d)	---	---	---		
Liquid Volume Flow	(m3/h)	---	---	---		
Heat Flow	(kW)	4.462e-011	7.043e-003	0.2077		
Molar Enthalpy	(kJ/kgmole)	---	---	---		

Composition

Fluid Pkg: All

Name	Sweep Gas In @TPL2	O2 Out @TPL2	Gas Products @TPL2	Liquid @TPL2	Anode @TPL2
Comp Mole Frac (H2O)	0.9900	0.0000	0.0000	0.0000	0.0000
Comp Mole Frac (Oxygen)	0.0100	1.0000	0.2518	0.2518	1.0000
Comp Mole Frac (Hydrogen)	0.0000	0.0000	0.5600	0.5600	0.0000
Comp Mole Frac (CO)	0.0000	0.0000	0.0184	0.0184	0.0000
Comp Mole Frac (CO2)	0.0000	0.0000	0.1697	0.1698	0.0000
Comp Mole Frac (Methanol)	0.0000	0.0000	0.0000	0.0000	0.0000
Comp Mole Frac (diM-Ether)	0.0000	0.0000	0.0000	0.0000	0.0000
Comp Mole Frac (1-Propanol)	0.0000	0.0000	0.0000	0.0000	0.0000
Name	H2,CO,H2O Out @TP	Cathode @TPL2	2 @TPL2	CO2, Water In @TPL2	
Comp Mole Frac (H2O)	0.1687	0.0000	0.1687	0.6732	
Comp Mole Frac (Oxygen)	0.0000	0.0000	0.0000	0.0000	
Comp Mole Frac (Hydrogen)	0.5798	0.7485	0.5798	0.0754	
Comp Mole Frac (CO)	0.1933	0.0246	0.1933	0.0246	
Comp Mole Frac (CO2)	0.0582	0.2269	0.0582	0.2269	
Comp Mole Frac (Methanol)	0.0000	0.0000	0.0000	0.0000	
Comp Mole Frac (diM-Ether)	0.0000	0.0000	0.0000	0.0000	
Comp Mole Frac (1-Propanol)	0.0000	0.0000	0.0000	0.0000	

Unit Ops

Operation Name	Operation Type	Feeds	Products	Ignored	Calc Level
Temp Average ASR @TPL2	Spreadsheet			Yes	500.0 *
Electrolysis Spreadsheet @TF	Spreadsheet			No	500.0 *

Workbook: High Temperature Co-Electrolysis (TPL2) (continued)

Unit Ops (continued)

Operation Name	Operation Type	Feeds	Products	Ignored	Calc Level
Steam Electrolysis @TPL2	Spreadsheet			No	500.0 *
CO2 Electrolysis @TPL2	Spreadsheet			No	500.0 *
Sweep Gas/O2 Mixer @TPL2	Mixer	Anode @TPL2	O2 Out @TPL2	No	500.0 *
		Sweep Gas In @TPL2			
Isothermal Electrolysis @TPL2	Conversion Reactor	CO2, Water In @TPL2	Liquid @TPL2	No	500.0 *
		Electrolysis Heatiing @TPL2	Gas Products @TPL2		
			Electrolysis Heatiing @TPL2		
Electrodes @TPL2	Component Splitter	Gas Products @TPL2	Cathode @TPL2	No	500.0 *
			Anode @TPL2		
ERV-100 @TPL2	Equilibrium Reactor	Cathode @TPL2	2 @TPL2	No	500.0 *
		Shift Reactor 2 Heat @TPL2	H2,CO,H2O Out @TPL2		
			Shift Reactor 2 Heat @TPL2		
SET-1 @TPL2	Set			No	500.0 *
SET-3 @TPL2	Set			No	500.0 *
SET-2 @TPL2	Set			No	500.0 *
ADJ-1 @TPL2	Adjust			No	3500 *

Workbook: Distillation Column 1 (COL1)

Material Streams

Fluid Pkg: All

Name		Reflux @COL1	To Condenser @COL1	Boilup @COL1	To Reboiler @COL1	MEOH-8 @COL1
Vapour Fraction		0.0000	1.0000	1.0000	0.0000	0.0000
Temperature	(C)	40.14	63.14	78.98	78.23	78.98
Pressure	(kPa)	137.9	137.9	137.9	137.9	137.9
Molar Flow	(gmole/h)	0.0470	7.833e-002	0.1692	1.343	1.174
Mass Flow	(kg/d)	3.622e-002	6.337e-002	0.1273	0.9388	0.8114
Liquid Volume Flow	(m3/h)	1.896e-006	3.375e-006	6.630e-006	4.788e-005	4.125e-005
Heat Flow	(kW)	-3.125e-003	-5.191e-003	-9.448e-003	-9.159e-002	-8.040e-002
Name		LT-GAS-1 @COL1	MEOH-7 @COL1			
Vapour Fraction		1.0000	0.0163			
Temperature	(C)	40.14	40.64			
Pressure	(kPa)	137.9	206.8			
Molar Flow	(gmole/h)	3.133e-002	1.205			
Mass Flow	(kg/d)	2.716e-002	0.8386			
Liquid Volume Flow	(m3/h)	1.478e-006	4.273e-005			
Heat Flow	(kW)	-2.579e-003	-8.421e-002			

Compositions

Fluid Pkg: All

Name	Reflux @COL1	To Condenser @COL1	Boilup @COL1	To Reboiler @COL1	MEOH-8 @COL1
Comp Mole Frac (H2O)	0.0000	0.0000	0.0489	0.2080	0.2309
Comp Mole Frac (Oxygen)	0.0000	0.0000	0.0000	0.0000	0.0000
Comp Mole Frac (Hydrogen)	0.0000	0.0449	0.0000	0.0000	0.0000
Comp Mole Frac (CO)	0.0000	0.0014	0.0000	0.0000	0.0000
Comp Mole Frac (CO2)	0.0053	0.2495	0.0000	0.0000	0.0000
Comp Mole Frac (Methanol)	0.9943	0.7015	0.9509	0.7919	0.7689
Comp Mole Frac (diM-Ether)	0.0004	0.0028	0.0000	0.0000	0.0000
Comp Mole Frac (1-Propanol)	0.0000	0.0000	0.0001	0.0001	0.0001

Workbook: Distillation Column 1 (COL1) (continued)

Compositions (continued)

Fluid Pkg: All

Name	LT-GAS-1 @COL1	MEOH-7 @COL1			
Comp Mole Frac (H2O)	0.0000	0.2249			
Comp Mole Frac (Oxygen)	0.0000	0.0000			
Comp Mole Frac (Hydrogen)	0.1122	0.0029			
Comp Mole Frac (CO)	0.0035	0.0001			
Comp Mole Frac (CO2)	0.6157	0.0160			
Comp Mole Frac (Methanol)	0.2622	0.7558			
Comp Mole Frac (diM-Ether)	0.0063	0.0002			
Comp Mole Frac (1-Propanol)	0.0000	0.0001			

Energy Streams

Fluid Pkg: All

Name		CND1 Q @COL1	RB1 Q @COL1			
Heat Flow	(kW)	5.120e-004	1.736e-003			

Unit Ops

Operation Name	Operation Type	Feeds	Products	Ignored	Calc Level
Condenser @COL1	Partial Condenser	To Condenser @COL1 CND1 Q @COL1	LT-GAS-1 @COL1 Reflux @COL1 CND1 Q @COL1	No	500.0 *
Reboiler @COL1	Reboiler	To Reboiler @COL1 RB1 Q @COL1	MEOH-8 @COL1 Boilup @COL1	No	500.0 *
Main TS @COL1	Tray Section	Reflux @COL1 Boilup @COL1 MEOH-7 @COL1	To Reboiler @COL1 To Condenser @COL1	No	500.0 *

Workbook: Distillation Column 2 (COL2)

Material Streams

Fluid Pkg: All

Name		Reflux @COL2	To Condenser @COL2	Boilup @COL2	To Reboiler @COL2	MEOH-9 @COL2
Vapour Fraction		0.0000	1.0000	1.0000	0.0000	0.0000
Temperature	(C)	40.00	75.35	108.6	108.5	40.00
Pressure	(kPa)	137.9	137.9	137.9	137.9	137.9
Molar Flow	(gmole/h)	1.111	2.022	1.924	2.186	0.9110
Mass Flow	(kg/d)	0.8478	1.543	0.8604	0.9769	0.6950
Liquid Volume Flow	(m3/h)	4.430e-005	8.061e-005	3.661e-005	4.155e-005	3.631e-005
Heat Flow	(kW)	-7.394e-002	-0.1123	-0.1268	-0.1688	-6.061e-002
Name		WATER-2 @COL2	MEOH-8 @COL2			
Vapour Fraction		0.0000	0.0000			
Temperature	(C)	108.6	78.98			
Pressure	(kPa)	137.9	137.9			
Molar Flow	(gmole/h)	0.2627	1.174			
Mass Flow	(kg/d)	0.1165	0.8114			
Liquid Volume Flow	(m3/h)	4.935e-006	4.125e-005			
Heat Flow	(kW)	-2.031e-002	-8.040e-002			

Workbook: Distillation Column 2 (COL2) (continued)

Compositions

Fluid Pkg: All

Name	Reflux @COL2	To Condenser @COL2	Boilup @COL2	To Reboiler @COL2	MEOH-9 @COL2
Comp Mole Frac (H2O)	0.0187	0.0187	0.9558	0.9571	0.0187
Comp Mole Frac (Oxygen)	0.0000	0.0000	0.0000	0.0000	0.0000
Comp Mole Frac (Hydrogen)	0.0000	0.0000	0.0000	0.0000	0.0000
Comp Mole Frac (CO)	0.0000	0.0000	0.0000	0.0000	0.0000
Comp Mole Frac (CO2)	0.0000	0.0000	0.0000	0.0000	0.0000
Comp Mole Frac (Methanol)	0.9811	0.9811	0.0442	0.0429	0.9811
Comp Mole Frac (diM-Ether)	0.0000	0.0000	0.0000	0.0000	0.0000
Comp Mole Frac (1-Propanol)	0.0002	0.0002	0.0000	0.0000	0.0002

Name	WATER-2 @COL2	MEOH-8 @COL2
Comp Mole Frac (H2O)	0.9669	0.2309
Comp Mole Frac (Oxygen)	0.0000	0.0000
Comp Mole Frac (Hydrogen)	0.0000	0.0000
Comp Mole Frac (CO)	0.0000	0.0000
Comp Mole Frac (CO2)	0.0000	0.0000
Comp Mole Frac (Methanol)	0.0331	0.7689
Comp Mole Frac (diM-Ether)	0.0000	0.0000
Comp Mole Frac (1-Propanol)	0.0000	0.0001

Energy Streams

Fluid Pkg: All

Name		CND2 Q @COL2	RB2 Q @COL2
Heat Flow	(kW)	2.222e-002	2.171e-002

Unit Ops

Operation Name	Operation Type	Feeds	Products	Ignored	Calc Level
Reboiler @COL2	Reboiler	To Reboiler @COL2 RB2 Q @COL2	WATER-2 @COL2 Boilup @COL2	No	500.0 *
Main TS @COL2	Tray Section	Reflux @COL2 Boilup @COL2 MEOH-8 @COL2	To Reboiler @COL2 To Condenser @COL2	No	500.0 *
Condenser @COL2	Total Condenser	To Condenser @COL2 CND2 Q @COL2	MEOH-9 @COL2 Reflux @COL2 CND2 Q @COL2	No	500.0 *

Workbook: Case (Main)

Streams

Fluid Pkg: All

Name		SYNG-2	M-RECY2	1	SYNG-3	SYNG-5
Vapour Fraction		1.0000	1.0000	0.9990	1.0000	1.0000
Temperature	(C)	178.2	42.00	67.01	75.58	216.7 *
Pressure	(kPa)	7501 *	6977	6977	7515 *	7460
Molar Flow	(gmole/h)	3.674	18.22	21.89	21.89	21.89
Mass Flow	(kg/d)	0.8799	1.090	1.970	1.970	1.970
Std Ideal Liq Vol Flow	(m3/h)	1.144e-004	5.298e-004	6.442e-004	6.442e-004	6.442e-004
Heat Flow	(kW)	-4.625e-002	-1.591e-002	-6.216e-002	-6.039e-002	-3.512e-002
Molar Enthalpy	(kJ/kgmole)	-4.532e+004	-3144	-1.022e+004	-9930	-5776
Name		MEOH-2	MEOH-4	Vap Out	2	3
Vapour Fraction		1.0000	0.9791	1.0000	0.0000	0.0000
Temperature	(C)	226.7	103.9	226.7 *	226.7	226.7
Pressure	(kPa)	7060	7005	7060	7060	7060
Molar Flow	(gmole/h)	20.01	20.01	20.01	0.0000	0.0000
Mass Flow	(kg/d)	1.970	1.970	1.970	0.0000	0.0000
Std Ideal Liq Vol Flow	(m3/h)	5.893e-004	5.893e-004	5.893e-004	0.0000	0.0000
Heat Flow	(kW)	-5.712e-002	-8.238e-002	-5.712e-002	-0.0000	-0.0000
Molar Enthalpy	(kJ/kgmole)	-1.028e+004	-1.482e+004	-1.028e+004	-1.028e+004	-1.028e+004
Name		MEOH-6	MEOH-5	MEOH-7	MEOH-8	LT-GAS-1
Vapour Fraction		0.0000	0.9386	0.0042	0.0000	1.0000
Temperature	(C)	42.00	42.00 *	44.21	79.08	-6.885
Pressure	(kPa)	6977	6977	206.8 *	137.9	137.9
Molar Flow	(gmole/h)	1.228	20.01	1.228	1.223	5.650e-003
Mass Flow	(kg/d)	0.8462	1.970	0.8462	0.8441	2.093e-003
Std Ideal Liq Vol Flow	(m3/h)	4.309e-005	5.893e-004	4.309e-005	4.289e-005	2.087e-007
Heat Flow	(kW)	-8.508e-002	-0.1015	-8.508e-002	-8.381e-002	-1.855e-004
Molar Enthalpy	(kJ/kgmole)	-2.494e+005	-1.826e+004	-2.494e+005	-2.468e+005	-1.182e+005
Name		M-RECY	PURGE-1	PURGE-2	LT-GAS	WATER-OUT-2
Vapour Fraction		1.0000	1.0000	1.0000	1.0000	0.0000
Temperature	(C)	42.00	42.00	43.11	42.55	108.6
Pressure	(kPa)	6977	6977	137.9	137.9	137.9
Molar Flow	(gmole/h)	18.78	0.5635	0.5635	0.5692	0.2964
Mass Flow	(kg/d)	1.123	0.0337	0.0337	0.0358	0.1316
Std Ideal Liq Vol Flow	(m3/h)	5.462e-004	1.638e-005	1.638e-005	1.659e-005	5.580e-006
Heat Flow	(kW)	-1.641e-002	-4.922e-004	-4.922e-004	-6.777e-004	-2.291e-002
Molar Enthalpy	(kJ/kgmole)	-3144	-3144	-3144	-4286	-2.782e+005
Name		MEOH-9	CO2, Water In	H2,CO,H2O Out	9	Sweep Gas In
Vapour Fraction		0.0000	1.0000	1.0000	1.0000	1.0000
Temperature	(C)	40.00	800.3	800.0	800.0 *	800.3
Pressure	(kPa)	137.9	137.9	135.1	137.9	135.1
Molar Flow	(gmole/h)	0.9263	4.844	4.844	4.844	1.000e-010 *
Mass Flow	(kg/d)	0.7124	2.584	1.285	2.584	4.357e-011
Std Ideal Liq Vol Flow	(m3/h)	3.731e-005	1.278e-004	1.424e-004	1.277e-004	1.815e-015
Heat Flow	(kW)	-6.138e-002	-0.2968	-6.814e-002	-0.2968	-5.841e-012
Molar Enthalpy	(kJ/kgmole)	-2.385e+005	-2.206e+005	-5.064e+004	-2.206e+005	-2.103e+005

Workbook: Case (Main) (continued)

Streams (continued)

Fluid Pkg: All

Name		Hot O2	400	8	Warm O2	25
Vapour Fraction		1.0000	0.0000	0.3127	1.0000	1.0000
Temperature	(C)	800.0	800.3	33.25	123.0	168.4
Pressure	(kPa)	135.1	137.9	137.9	135.1	135.1
Molar Flow	(gmole/h)	1.692	0.0000	4.844	1.692	4.844
Mass Flow	(kg/d)	1.299	0.0000	2.584	1.299	1.285
Std Ideal Liq Vol Flow	(m3/h)	4.758e-005	0.0000	1.277e-004	4.758e-005	1.424e-004
Heat Flow	(kW)	1.186e-002	-0.0000	-0.3774	1.362e-003	-9.560e-002
Molar Enthalpy	(kJ/kgmole)	2.525e+004	-2.206e+005	-2.804e+005	2899	-7.105e+004
Name		WATER-IN	CO2-IN	4	5	6
Vapour Fraction		0.0000	1.0000	1.0000	0.9603	1.0000
Temperature	(C)	21.00 *	21.00 *	775.0 *	98.00 *	123.0 *
Pressure	(kPa)	137.9	137.9 *	137.9	137.9	135.1
Molar Flow	(gmole/h)	2.727	0.9468	4.844	4.844	0.6065
Mass Flow	(kg/d)	1.179 *	1.000 *	2.584	2.584	0.1608
Std Ideal Liq Vol Flow	(m3/h)	4.922e-005	5.048e-005	1.277e-004	1.277e-004	1.783e-005
Heat Flow	(kW)	-0.2168	-0.1036	-0.2982	-0.3362	-1.220e-002
Molar Enthalpy	(kJ/kgmole)	-2.862e+005	-3.940e+005	-2.216e+005	-2.499e+005	-7.243e+004
Name		7	10	SYNG-1	13	14
Vapour Fraction		1.0000	1.0000	1.0000	0.0000	0.0000
Temperature	(C)	123.0	125.9	26.67 *	26.67	26.67
Pressure	(kPa)	135.1	137.9	135.1	135.1	137.9
Molar Flow	(gmole/h)	4.238	0.6065	3.674	0.5640	0.5640
Mass Flow	(kg/d)	1.124	0.1608	0.8799	0.2439	0.2439
Std Ideal Liq Vol Flow	(m3/h)	1.246e-004	1.783e-005	1.144e-004	1.018e-005	1.018e-005
Heat Flow	(kW)	-8.526e-002	-1.219e-002	-5.078e-002	-4.477e-002	-4.477e-002
Molar Enthalpy	(kJ/kgmole)	-7.243e+004	-7.234e+004	-4.976e+004	-2.858e+005	-2.858e+005
Name		SYNG-RCY	O2-OUT	18	17	11
Vapour Fraction		0.5132	1.0000	0.3336	0.3127	1.0000
Temperature	(C)	60.31	58.25	51.49	33.25 *	123.0
Pressure	(kPa)	137.9	135.1	137.9	137.9 *	135.1
Molar Flow	(gmole/h)	1.170	1.692	4.844	4.844 *	4.844
Mass Flow	(kg/d)	0.4047	1.299	2.584	2.584	1.285
Std Ideal Liq Vol Flow	(m3/h)	2.801e-005	4.758e-005	1.277e-004	1.277e-004	1.424e-004
Heat Flow	(kW)	-5.695e-002	4.535e-004	-0.3746	-0.3774	-9.746e-002
Molar Enthalpy	(kJ/kgmole)	-1.752e+005	965.1	-2.784e+005	-2.804e+005	-7.243e+004
Name		19	20	21	22	23
Vapour Fraction		1.0000	1.0000	1.0000	1.0000 *	1.0000
Temperature	(C)	176.7 *	54.44 *	176.7 *	64.03	176.7 *
Pressure	(kPa)	418.4	418.4	1006	1006	2229
Molar Flow	(gmole/h)	3.674	3.674	3.674	3.674	3.674
Mass Flow	(kg/d)	0.8799	0.8799	0.8799	0.8799	0.8799
Std Ideal Liq Vol Flow	(m3/h)	1.144e-004	1.144e-004	1.144e-004	1.144e-004	1.144e-004
Heat Flow	(kW)	-4.626e-002	-4.996e-002	-4.626e-002	-4.969e-002	-4.627e-002
Molar Enthalpy	(kJ/kgmole)	-4.533e+004	-4.896e+004	-4.534e+004	-4.869e+004	-4.534e+004

Workbook: Case (Main) (continued)

Streams (continued)

Fluid Pkg: All

Name		24	26	27	12	COMB-PROD
Vapour Fraction		1.0000 *	1.0000	1.0000 *	0.9990	1.0000
Temperature	(C)	80.95	176.7 *	95.24	67.01 *	1000 *
Pressure	(kPa)	2229	4301	4301	6977 *	137.9
Molar Flow	(gmole/h)	3.674	3.674	3.674	21.89 *	0.5754
Mass Flow	(kg/d)	0.8799	0.8799	0.8799	1.970	0.2548
Std Ideal Liq Vol Flow	(m3/h)	1.144e-004	1.144e-004	1.144e-004	6.442e-004	1.073e-005
Heat Flow	(kW)	-4.920e-002	-4.628e-002	-4.880e-002	-6.216e-002	-3.297e-002
Molar Enthalpy	(kJ/kgmole)	-4.821e+004	-4.535e+004	-4.782e+004	-1.022e+004	-2.063e+005
Name		28	O2-IN-1	WATER-OUT-1	CO2-OUT	COMB-PROD-2
Vapour Fraction		0.0000	1.0000	0.0000	1.0000	1.0000
Temperature	(C)	1000	15.56 *	26.67	26.67 *	1000 *
Pressure	(kPa)	137.9	137.9 *	137.9	137.9	137.9
Molar Flow	(gmole/h)	0.0000	0.2852	2.395	0.9595	2.779
Mass Flow	(kg/d)	0.0000	0.2190 *	1.036	0.9979	1.779
Std Ideal Liq Vol Flow	(m3/h)	0.0000	8.021e-006	4.328e-005	5.029e-005	8.284e-005
Heat Flow	(kW)	-0.0000	-2.286e-005	-0.1901	-0.1038	-0.1939
Molar Enthalpy	(kJ/kgmole)	-2.063e+005	-288.6	-2.858e+005	-3.897e+005	-2.512e+005
Name		16	29	O2-IN-2	COMP-2 W	MEOH-1 Q
Vapour Fraction		---	0.0000	1.0000	---	---
Temperature	(C)	---	1000	26.67 *	---	---
Pressure	(kPa)	---	137.9	137.9 *	---	---
Molar Flow	(gmole/h)	---	0.0000	1.389	---	---
Mass Flow	(kg/d)	---	0.0000	1.067 *	---	---
Std Ideal Liq Vol Flow	(m3/h)	---	0.0000	3.908e-005	---	---
Heat Flow	(kW)	---	-0.0000	1.386e-005	1.772e-003	-2.200e-002
Molar Enthalpy	(kJ/kgmole)	---	-2.512e+005	35.92	---	---
Name		COND Q	CND1 Q	RB1 Q	CND2 Q	RB2 Q
Vapour Fraction		---	---	---	---	---
Temperature	(C)	---	---	---	---	---
Pressure	(kPa)	---	---	---	---	---
Molar Flow	(gmole/h)	---	---	---	---	---
Mass Flow	(kg/d)	---	---	---	---	---
Std Ideal Liq Vol Flow	(m3/h)	---	---	---	---	---
Heat Flow	(kW)	0.0191	6.980e-005	1.156e-003	2.341e-002	2.294e-002
Molar Enthalpy	(kJ/kgmole)	---	---	---	---	---
Name		Electrolysis Power	Process Heat	Top Heat Q	Preheat Q	Circ Pwr
Vapour Fraction		---	---	---	---	---
Temperature	(C)	---	---	---	---	---
Pressure	(kPa)	---	---	---	---	---
Molar Flow	(gmole/h)	---	---	---	---	---
Mass Flow	(kg/d)	---	---	---	---	---
Std Ideal Liq Vol Flow	(m3/h)	---	---	---	---	---
Heat Flow	(kW)	0.2405	4.502e-010	1.462e-003	0.0384	1.499e-005
Molar Enthalpy	(kJ/kgmole)	---	---	---	---	---

Workbook: Case (Main) (continued)

Streams (continued)

Fluid Pkg: All

Name		Amb Q	Water Pump Pwr	ST1 PWR	IC1 Q	IC2 Q
Vapour Fraction		---	---	---	---	---
Temperature	(C)	---	---	---	---	---
Pressure	(kPa)	---	---	---	---	---
Molar Flow	(gmole/h)	---	---	---	---	---
Mass Flow	(kg/d)	---	---	---	---	---
Std Ideal Liq Vol Flow	(m3/h)	---	---	---	---	---
Heat Flow	(kW)	-1.029e-002	1.032e-008	4.520e-003	3.699e-003	3.423e-003
Molar Enthalpy	(kJ/kgmole)	---	---	---	---	---
Name		**ST2 PWR**	**ST3 PWR**	**IC3 Q**	**STG4 PWR**	**IC4 Q**
Vapour Fraction		---	---	---	---	---
Temperature	(C)	---	---	---	---	---
Pressure	(kPa)	---	---	---	---	---
Molar Flow	(gmole/h)	---	---	---	---	---
Mass Flow	(kg/d)	---	---	---	---	---
Std Ideal Liq Vol Flow	(m3/h)	---	---	---	---	---
Heat Flow	(kW)	3.695e-003	3.416e-003	2.930e-003	2.920e-003	2.518e-003
Molar Enthalpy	(kJ/kgmole)	---	---	---	---	---
Name		**STG5 PWR**	**COMB-Q-1**	**AMB-Q-1**	**COMB-Q-2**	
Vapour Fraction		---	---	---	---	
Temperature	(C)	---	---	---	---	
Pressure	(kPa)	---	---	---	---	
Molar Flow	(gmole/h)	---	---	---	---	
Mass Flow	(kg/d)	---	---	---	---	
Std Ideal Liq Vol Flow	(m3/h)	---	---	---	---	
Heat Flow	(kW)	2.555e-003	-3.227e-002	-6.712e-002	-0.1325	
Molar Enthalpy	(kJ/kgmole)	---	---	---	---	

Composition

Fluid Pkg: All

Name	SYNG-2	M-RECY2	1	SYNG-3	SYNG-5
Master Comp Mole Frac (H2O)	0.0260	0.0003	0.0046	0.0046	0.0046
Master Comp Mole Frac (Oxygen)	0.0000	0.0000	0.0000	0.0000	0.0000
Master Comp Mole Frac (Hydrogen)	0.7163	0.9859	0.9407	0.9407	0.9407
Master Comp Mole Frac (CO)	0.2047	0.0027	0.0366	0.0366	0.0366
Master Comp Mole Frac (CO2)	0.0530	0.0056	0.0135	0.0135	0.0135
Master Comp Mole Frac (Methanol)	0.0000	0.0053	0.0044	0.0044	0.0044
Master Comp Mole Frac (diM-Ether)	0.0000	0.0002	0.0001	0.0001	0.0001
Master Comp Mole Frac (1-Propanol)	0.0000	0.0000	0.0000	0.0000	0.0000
Name	**MEOH-2**	**MEOH-4**	**Vap Out**	**2**	**3**
Master Comp Mole Frac (H2O)	0.0146	0.0146	0.0145	0.0145	0.0146
Master Comp Mole Frac (Oxygen)	0.0000	0.0000	0.0000	0.0000	0.0000
Master Comp Mole Frac (Hydrogen)	0.9256	0.9256	0.9256	0.9256	0.9256
Master Comp Mole Frac (CO)	0.0026	0.0026	0.0026	0.0026	0.0026
Master Comp Mole Frac (CO2)	0.0053	0.0053	0.0053	0.0053	0.0053
Master Comp Mole Frac (Methanol)	0.0518	0.0518	0.0518	0.0518	0.0518
Master Comp Mole Frac (diM-Ether)	0.0002	0.0002	0.0002	0.0002	0.0002
Master Comp Mole Frac (1-Propanol)	0.0000	0.0000	0.0000	0.0000	0.0000

Workbook: Case (Main) (continued)

Composition (continued)

Fluid Pkg: All

Name	MEOH-6	MEOH-5	MEOH-7	MEOH-8	LT-GAS-1
Master Comp Mole Frac (H2O)	0.2329	0.0146	0.2329	0.2340	0.0000
Master Comp Mole Frac (Oxygen)	0.0000	0.0000	0.0000	0.0000	0.0000
Master Comp Mole Frac (Hydrogen)	0.0031	0.9256	0.0031	0.0000	0.6749
Master Comp Mole Frac (CO)	0.0000	0.0026	0.0000	0.0000	0.0047
Master Comp Mole Frac (CO2)	0.0013	0.0053	0.0013	0.0000	0.2735
Master Comp Mole Frac (Methanol)	0.7624	0.0518	0.7624	0.7659	0.0183
Master Comp Mole Frac (diM-Ether)	0.0001	0.0002	0.0001	0.0000	0.0286
Master Comp Mole Frac (1-Propanol)	0.0001	0.0000	0.0001	0.0001	0.0000

Name	M-RECY	PURGE-1	PURGE-2	LT-GAS	WATER-OUT-2
Master Comp Mole Frac (H2O)	0.0003	0.0003	0.0003	0.0003	0.9652
Master Comp Mole Frac (Oxygen)	0.0000	0.0000	0.0000	0.0000	0.0000
Master Comp Mole Frac (Hydrogen)	0.9859	0.9859	0.9859	0.9829	0.0000
Master Comp Mole Frac (CO)	0.0027	0.0027	0.0027	0.0028	0.0000
Master Comp Mole Frac (CO2)	0.0056	0.0056	0.0056	0.0082	0.0000
Master Comp Mole Frac (Methanol)	0.0053	0.0053	0.0053	0.0054	0.0348
Master Comp Mole Frac (diM-Ether)	0.0002	0.0002	0.0002	0.0005	0.0000
Master Comp Mole Frac (1-Propanol)	0.0000	0.0000	0.0000	0.0000	0.0000

Name	MEOH-9	CO2, Water In	H2,CO,H2O Out	9	Sweep Gas In
Master Comp Mole Frac (H2O)	0.0000	0.6984	0.1556	0.6988	0.9900 *
Master Comp Mole Frac (Oxygen)	0.0000	0.0000	0.0000	0.0000	0.0100 *
Master Comp Mole Frac (Hydrogen)	0.0000	0.0781	0.6210	0.0778	0.0000 *
Master Comp Mole Frac (CO)	0.0000	0.0218	0.1774	0.0222	0.0000 *
Master Comp Mole Frac (CO2)	0.0000	0.2016	0.0460	0.2012	0.0000 *
Master Comp Mole Frac (Methanol)	0.9998	0.0000	0.0000	0.0000	0.0000 *
Master Comp Mole Frac (diM-Ether)	0.0000	0.0000	0.0000	0.0000	0.0000 *
Master Comp Mole Frac (1-Propanol)	0.0002	0.0000	0.0000	0.0000	0.0000 *

Name	Hot O2	400	8	Warm O2	25
Master Comp Mole Frac (H2O)	0.0000	0.6984	0.6988	0.0000	0.1556
Master Comp Mole Frac (Oxygen)	1.0000	0.0000	0.0000	1.0000	0.0000
Master Comp Mole Frac (Hydrogen)	0.0000	0.0781	0.0778	0.0000	0.6210
Master Comp Mole Frac (CO)	0.0000	0.0218	0.0222	0.0000	0.1774
Master Comp Mole Frac (CO2)	0.0000	0.2016	0.2012	0.0000	0.0460
Master Comp Mole Frac (Methanol)	0.0000	0.0000	0.0000	0.0000	0.0000
Master Comp Mole Frac (diM-Ether)	0.0000	0.0000	0.0000	0.0000	0.0000
Master Comp Mole Frac (1-Propanol)	0.0000	0.0000	0.0000	0.0000	0.0000

Name	WATER-IN	CO2-IN	4	5	6
Master Comp Mole Frac (H2O)	1.0000 *	0.0000 *	0.6988	0.6988	0.1556
Master Comp Mole Frac (Oxygen)	0.0000 *	0.0000 *	0.0000	0.0000	0.0000
Master Comp Mole Frac (Hydrogen)	0.0000 *	0.0000 *	0.0778	0.0778	0.6210
Master Comp Mole Frac (CO)	0.0000 *	0.0000 *	0.0222	0.0222	0.1774
Master Comp Mole Frac (CO2)	0.0000 *	1.0000 *	0.2012	0.2012	0.0460
Master Comp Mole Frac (Methanol)	0.0000 *	0.0000 *	0.0000	0.0000	0.0000
Master Comp Mole Frac (diM-Ether)	0.0000 *	0.0000 *	0.0000	0.0000	0.0000
Master Comp Mole Frac (1-Propanol)	0.0000 *	0.0000 *	0.0000	0.0000	0.0000

Workbook: Case (Main) (continued)

Composition (continued)

Fluid Pkg: All

Name	7	10	SYNG-1	13	14
Master Comp Mole Frac (H2O)	0.1556	0.1556	0.0260	0.9999	0.9999
Master Comp Mole Frac (Oxygen)	0.0000	0.0000	0.0000	0.0000	0.0000
Master Comp Mole Frac (Hydrogen)	0.6210	0.6210	0.7163	0.0001	0.0001
Master Comp Mole Frac (CO)	0.1774	0.1774	0.2047	0.0000	0.0000
Master Comp Mole Frac (CO2)	0.0460	0.0460	0.0530	0.0000	0.0000
Master Comp Mole Frac (Methanol)	0.0000	0.0000	0.0000	0.0000	0.0000
Master Comp Mole Frac (diM-Ether)	0.0000	0.0000	0.0000	0.0000	0.0000
Master Comp Mole Frac (1-Propanol)	0.0000	0.0000	0.0000	0.0000	0.0000

Name	SYNG-RCY	O2-OUT	18	17	11
Master Comp Mole Frac (H2O)	0.5624	0.0000	0.6988	0.6988 *	0.1556
Master Comp Mole Frac (Oxygen)	0.0000	1.0000	0.0000	0.0000 *	0.0000
Master Comp Mole Frac (Hydrogen)	0.3218	0.0000	0.0778	0.0778 *	0.6210
Master Comp Mole Frac (CO)	0.0919	0.0000	0.0222	0.0222 *	0.1774
Master Comp Mole Frac (CO2)	0.0238	0.0000	0.2012	0.2012 *	0.0460
Master Comp Mole Frac (Methanol)	0.0000	0.0000	0.0000	0.0000 *	0.0000
Master Comp Mole Frac (diM-Ether)	0.0000	0.0000	0.0000	0.0000 *	0.0000
Master Comp Mole Frac (1-Propanol)	0.0000	0.0000	0.0000	0.0000 *	0.0000

Name	19	20	21	22	23
Master Comp Mole Frac (H2O)	0.0260	0.0260	0.0260	0.0260	0.0260
Master Comp Mole Frac (Oxygen)	0.0000	0.0000	0.0000	0.0000	0.0000
Master Comp Mole Frac (Hydrogen)	0.7163	0.7163	0.7163	0.7163	0.7163
Master Comp Mole Frac (CO)	0.2047	0.2047	0.2047	0.2047	0.2047
Master Comp Mole Frac (CO2)	0.0530	0.0530	0.0530	0.0530	0.0530
Master Comp Mole Frac (Methanol)	0.0000	0.0000	0.0000	0.0000	0.0000
Master Comp Mole Frac (diM-Ether)	0.0000	0.0000	0.0000	0.0000	0.0000
Master Comp Mole Frac (1-Propanol)	0.0000	0.0000	0.0000	0.0000	0.0000

Name	24	26	27	12	COMB-PROD
Master Comp Mole Frac (H2O)	0.0260	0.0260	0.0260	0.0046 *	0.9832
Master Comp Mole Frac (Oxygen)	0.0000	0.0000	0.0000	0.0000 *	0.0001
Master Comp Mole Frac (Hydrogen)	0.7163	0.7163	0.7163	0.9407 *	0.0000
Master Comp Mole Frac (CO)	0.2047	0.2047	0.2047	0.0366 *	0.0000
Master Comp Mole Frac (CO2)	0.0530	0.0530	0.0530	0.0135 *	0.0162
Master Comp Mole Frac (Methanol)	0.0000	0.0000	0.0000	0.0044 *	0.0000
Master Comp Mole Frac (diM-Ether)	0.0000	0.0000	0.0000	0.0001 *	0.0004
Master Comp Mole Frac (1-Propanol)	0.0000	0.0000	0.0000	0.0000 *	0.0000

Name	28	O2-IN-1	WATER-OUT-1	CO2-OUT	COMB-PROD-2
Master Comp Mole Frac (H2O)	0.9832	0.0000 *	0.9994	0.0259	0.6666
Master Comp Mole Frac (Oxygen)	0.0001	1.0000 *	0.0000	0.0003	0.0001
Master Comp Mole Frac (Hydrogen)	0.0000	0.0000 *	0.0000	0.0000	0.0000
Master Comp Mole Frac (CO)	0.0000	0.0000 *	0.0000	0.0000	0.0000
Master Comp Mole Frac (CO2)	0.0162	0.0000 *	0.0006	0.9733	0.3333
Master Comp Mole Frac (Methanol)	0.0000	0.0000 *	0.0000	0.0000	0.0000
Master Comp Mole Frac (diM-Ether)	0.0004	0.0000 *	0.0000	0.0003	0.0000
Master Comp Mole Frac (1-Propanol)	0.0000	0.0000 *	0.0000	0.0002	0.0001

Workbook: Case (Main) (continued)

Composition (continued)

Fluid Pkg: All

Name	16	29	O2-IN-2		
Master Comp Mole Frac (H2O)	---	0.6666	0.0000 *		
Master Comp Mole Frac (Oxygen)	---	0.0001	1.0000 *		
Master Comp Mole Frac (Hydrogen)	---	0.0000	0.0000 *		
Master Comp Mole Frac (CO)	---	0.0000	0.0000 *		
Master Comp Mole Frac (CO2)	---	0.3333	0.0000 *		
Master Comp Mole Frac (Methanol)	---	0.0000	0.0000 *		
Master Comp Mole Frac (diM-Ether)	---	0.0000	0.0000 *		
Master Comp Mole Frac (1-Propanol)	---	0.0001	0.0000 *		

Unit Ops

Operation Name	Operation Type	Feeds	Products	Ignored	Calc Level
COMP-2	Compressor	12 COMP-2 W	SYNG-3	No	500.0 *
Syngas Circulator	Compressor	6 Circ Pwr	10	No	500.0 *
SG CMP STG4	Compressor	24 STG4 PWR	26	No	500.0 *
SG CMP STG1	Compressor	SYNG-1 ST1 PWR	19	No	500.0 *
SG CMP STG2	Compressor	20 ST2 PWR	21	No	500.0 *
SG CMP STG3	Compressor	22 ST3 PWR	23	No	500.0 *
SG CMP STG 5	Compressor	27 STG5 PWR	SYNG-2	No	500.0 *
M3	Mixer	SYNG-2 M-RECY2	1	No	500.0 *
MIX-100	Mixer	LT-GAS-1 PURGE-2	LT-GAS	No	500.0 *
M1	Mixer	WATER-IN CO2-IN SYNG-RCY	8	No	500.0 *
M2	Mixer	14 10	SYNG-RCY	No	500.0 *
HX	LNG	SYNG-3 MEOH-2	SYNG-5 MEOH-4	No	500.0 *
Hi Temp Recup	LNG	H2,CO,H2O Out 5 Hot O2	25 4 Warm O2	No	500.0 *
Lo Temp Recup	LNG	25 17 Warm O2	11 18 O2-OUT	No	500.0 *
MEOH-1	Equilibrium Reactor	SYNG-5 MEOH-1 Q	2 Vap Out MEOH-1 Q	No	500.0 *
RWGS 1	Equilibrium Reactor	9	400 CO2, Water In	No	500.0 *
MEOH-2	Conversion Reactor	Vap Out	3 MEOH-2	No	500.0 *
COMB-1	Conversion Reactor	LT-GAS O2-IN-1	28 COMB-PROD	No	500.0 *

Workbook: Case (Main) (continued)

Unit Ops (continued)

Operation Name	Operation Type	Feeds	Products	Ignored	Calc Level
COMB-1	Conversion Reactor	COMB-Q-1	COMB-Q-1	No	500.0 *
COMB-2	Conversion Reactor	MEOH-9	29	No	500.0 *
		O2-IN-2	COMB-PROD-2		
		COMB-Q-2	COMB-Q-2		
KO-DRM	Separator	MEOH-5	MEOH-6	No	500.0 *
			M-RECY		
Water Knockout Tank	Separator	7	13	No	500.0 *
		Amb Q	SYNG-1		
			Amb Q		
KO-DRM 2	Separator	COMB-PROD	WATER-OUT-1	No	500.0 *
		COMB-PROD-2	CO2-OUT		
		AMB-Q-1	AMB-Q-1		
CONDNSR	Cooler	MEOH-4	MEOH-5	No	500.0 *
			COND Q		
INT CLR 1	Cooler	19	20	No	500.0 *
			IC1 Q		
INT CLR 2	Cooler	21	22	No	500.0 *
			IC2 Q		
INT CLR 3	Cooler	23	24	No	500.0 *
			IC3 Q		
INT CLR 4	Cooler	26	27	No	500.0 *
			IC4 Q		
VALVE-3	Valve	MEOH-6	MEOH-7	No	500.0 *
VALVE-2	Valve	PURGE-1	PURGE-2	No	500.0 *
T-100	Distillation	MEOH-7	MEOH-8	No	2500 *
		RB1 Q	LT-GAS-1		
			CND1 Q		
T-101	Distillation	MEOH-8	WATER-OUT-2	No	2500 *
		RB2 Q	MEOH-9		
			CND2 Q		
RCY-4	Recycle	8	17	No	3500 *
RCY-1	Recycle	1	12	No	3500 *
TEE-100	Tee	M-RECY	M-RECY2	No	500.0 *
			PURGE-1		
T1	Tee	11	6	No	500.0 *
			7		
High Temperature Co-Electrol	Standard Sub-Flowsheet	Sweep Gas In	Hot O2	No	2500 *
		CO2, Water In	H2,CO,H2O Out		
		Process Heat			
		Electrolysis Power			
Topping Heat	Heater	4	9	No	500.0 *
		Top Heat Q			
Preheater	Heater	18	5	No	500.0 *
		Preheat Q			
SPRDSHT-1	Spreadsheet			No	500.0 *
Water Pump	Pump	13	14	No	500.0 *
		Water Pump Pwr			

Honeywell	Company Name Not Available Calgary, Alberta CANADA	Case Name: \\vmware-host\...\PSA Results\MeOH Production w Comb ratio 3_5.usc Unit Set: NASA Date/Time: Wednesday Feb 16 2011, 10:01:00

Workbook: High Temperature Co-Electrolysis (TPL2)

Streams

Fluid Pkg: All

Name		Sweep Gas In @TPL2	O2 Out @TPL2	Gas Products @TPL2	Liquid @TPL2	Anode @TPL2
Vapour Fraction		1.0000	1.0000	1.0000	0.0000	1.0000
Temperature	(C)	800.3	800.0	800.0 *	800.0	800.0
Pressure	(kPa)	135.1	135.1	136.5	136.5	135.1
Molar Flow	(gmole/h)	1.000e-010	1.692	6.536	0.0000	1.692
Mass Flow	(kg/d)	4.357e-011	1.299	2.584	0.0000	1.299
Liquid Volume Flow	(m3/h)	1.815e-015	4.758e-005	2.119e-004	0.0000	4.758e-005
Heat Flow	(kW)	-5.841e-012	1.186e-002	-6.355e-002	-0.0000	1.186e-002
Molar Enthalpy	(kJ/kgmole)	-2.103e+005	2.525e+004	-3.500e+004	-3.501e+004	2.525e+004
Name		H2,CO,H2O Out @TP	Cathode @TPL2	2 @TPL2	CO2, Water In @TPL2	Electrolysis Heatiing @
Vapour Fraction		1.0000	1.0000	0.0000	1.0000	---
Temperature	(C)	800.0 *	800.0 *	800.0	800.3	---
Pressure	(kPa)	135.1	135.1	135.1	137.9	---
Molar Flow	(gmole/h)	4.844	4.844	0.0000	4.844	---
Mass Flow	(kg/d)	1.285	1.285	0.0000	2.584	---
Liquid Volume Flow	(m3/h)	1.424e-004	1.643e-004	0.0000	1.278e-004	---
Heat Flow	(kW)	-6.814e-002	-7.541e-002	-0.0000	-0.2968	0.2332
Molar Enthalpy	(kJ/kgmole)	-5.064e+004	-5.604e+004	-5.064e+004	-2.206e+005	---
Name		Process Heat @TPL2	Shift Reactor 2 Heat @	Electrolysis Power @T		
Vapour Fraction		---	---	---		
Temperature	(C)	---	---	---		
Pressure	(kPa)	---	---	---		
Molar Flow	(gmole/h)	---	---	---		
Mass Flow	(kg/d)	---	---	---		
Liquid Volume Flow	(m3/h)	---	---	---		
Heat Flow	(kW)	4.502e-010	7.277e-003	0.2405		
Molar Enthalpy	(kJ/kgmole)	---	---	---		

Composition

Fluid Pkg: All

Name	Sweep Gas In @TPL2	O2 Out @TPL2	Gas Products @TPL2	Liquid @TPL2	Anode @TPL2
Comp Mole Frac (H2O)	0.9900	0.0000	0.0000	0.0000	0.0000
Comp Mole Frac (Oxygen)	0.0100	1.0000	0.2588	0.2588	1.0000
Comp Mole Frac (Hydrogen)	0.0000	0.0000	0.5756	0.5756	0.0000
Comp Mole Frac (CO)	0.0000	0.0000	0.0162	0.0162	0.0000
Comp Mole Frac (CO2)	0.0000	0.0000	0.1494	0.1494	0.0000
Comp Mole Frac (Methanol)	0.0000	0.0000	0.0000	0.0000	0.0000
Comp Mole Frac (diM-Ether)	0.0000	0.0000	0.0000	0.0000	0.0000
Comp Mole Frac (1-Propanol)	0.0000	0.0000	0.0000	0.0000	0.0000
Name	H2,CO,H2O Out @TP	Cathode @TPL2	2 @TPL2	CO2, Water In @TPL2	
Comp Mole Frac (H2O)	0.1556	0.0000	0.1556	0.6984	
Comp Mole Frac (Oxygen)	0.0000	0.0000	0.0000	0.0000	
Comp Mole Frac (Hydrogen)	0.6210	0.7766	0.6210	0.0781	
Comp Mole Frac (CO)	0.1774	0.0218	0.1774	0.0218	
Comp Mole Frac (CO2)	0.0460	0.2016	0.0460	0.2016	
Comp Mole Frac (Methanol)	0.0000	0.0000	0.0000	0.0000	
Comp Mole Frac (diM-Ether)	0.0000	0.0000	0.0000	0.0000	
Comp Mole Frac (1-Propanol)	0.0000	0.0000	0.0000	0.0000	

Unit Ops

Operation Name	Operation Type	Feeds	Products	Ignored	Calc Level
Temp Average ASR @TPL2	Spreadsheet			Yes	500.0 *
Electrolysis Spreadsheet @TF	Spreadsheet			No	500.0 *

Workbook: High Temperature Co-Electrolysis (TPL2) (continued)

Unit Ops (continued)

Operation Name	Operation Type	Feeds	Products	Ignored	Calc Level
Steam Electrolysis @TPL2	Spreadsheet			No	500.0 *
CO2 Electrolysis @TPL2	Spreadsheet			No	500.0 *
Sweep Gas/O2 Mixer @TPL2	Mixer	Anode @TPL2	O2 Out @TPL2	No	500.0 *
		Sweep Gas In @TPL2			
Isothermal Electrolysis @TPL2	Conversion Reactor	CO2, Water In @TPL2	Liquid @TPL2	No	500.0 *
		Electrolysis Heatiing @TPL2	Gas Products @TPL2		
			Electrolysis Heatiing @TPL2		
Electrodes @TPL2	Component Splitter	Gas Products @TPL2	Cathode @TPL2	No	500.0 *
			Anode @TPL2		
ERV-100 @TPL2	Equilibrium Reactor	Cathode @TPL2	2 @TPL2	No	500.0 *
		Shift Reactor 2 Heat @TPL2	H2,CO,H2O Out @TPL2		
			Shift Reactor 2 Heat @TPL2		
SET-1 @TPL2	Set			No	500.0 *
SET-3 @TPL2	Set			No	500.0 *
SET-2 @TPL2	Set			No	500.0 *
ADJ-1 @TPL2	Adjust			No	3500 *

Workbook: T-100 (COL1)

Material Streams

Fluid Pkg: All

Name		Reflux @COL1	To Condenser @COL1	Boilup @COL1	To Reboiler @COL1	MEOH-8 @COL1
Vapour Fraction		0.0000	1.0000	1.0000	0.0000	0.0000
Temperature	(C)	-6.885	54.98	79.08	78.57	79.08
Pressure	(kPa)	137.9	137.9	137.9	137.9	137.9
Molar Flow	(gmole/h)	5.650e-003	0.0113	0.1126	1.335	1.223
Mass Flow	(kg/d)	4.363e-003	6.456e-003	8.473e-002	0.9288	0.8441
Liquid Volume Flow	(m3/h)	2.287e-007	4.374e-007	4.411e-006	4.730e-005	4.289e-005
Heat Flow	(kW)	-3.820e-004	-4.977e-004	-6.290e-003	-9.126e-002	-8.381e-002
Name		LT-GAS-1 @COL1	MEOH-7 @COL1			
Vapour Fraction		1.0000	0.0042			
Temperature	(C)	-6.885	44.21			
Pressure	(kPa)	137.9	206.8			
Molar Flow	(gmole/h)	5.650e-003	1.228			
Mass Flow	(kg/d)	2.093e-003	0.8462			
Liquid Volume Flow	(m3/h)	2.087e-007	4.309e-005			
Heat Flow	(kW)	-1.855e-004	-8.508e-002			

Compositions

Fluid Pkg: All

Name	Reflux @COL1	To Condenser @COL1	Boilup @COL1	To Reboiler @COL1	MEOH-8 @COL1
Comp Mole Frac (H2O)	0.0000	0.0000	0.0499	0.2185	0.2340
Comp Mole Frac (Oxygen)	0.0000	0.0000	0.0000	0.0000	0.0000
Comp Mole Frac (Hydrogen)	0.0000	0.3375	0.0000	0.0000	0.0000
Comp Mole Frac (CO)	0.0000	0.0024	0.0000	0.0000	0.0000
Comp Mole Frac (CO2)	0.0047	0.1391	0.0000	0.0000	0.0000
Comp Mole Frac (Methanol)	0.9899	0.5041	0.9499	0.7814	0.7659
Comp Mole Frac (diM-Ether)	0.0053	0.0169	0.0000	0.0000	0.0000
Comp Mole Frac (1-Propanol)	0.0000	0.0000	0.0002	0.0001	0.0001

Workbook: T-100 (COL1) (continued)

Compositions (continued)

Fluid Pkg: All

Name	LT-GAS-1 @COL1	MEOH-7 @COL1			
Comp Mole Frac (H2O)	0.0000	0.2329			
Comp Mole Frac (Oxygen)	0.0000	0.0000			
Comp Mole Frac (Hydrogen)	0.6749	0.0031			
Comp Mole Frac (CO)	0.0047	0.0000			
Comp Mole Frac (CO2)	0.2735	0.0013			
Comp Mole Frac (Methanol)	0.0183	0.7624			
Comp Mole Frac (diM-Ether)	0.0286	0.0001			
Comp Mole Frac (1-Propanol)	0.0000	0.0001			

Energy Streams

Fluid Pkg: All

Name		CND1 Q @COL1	RB1 Q @COL1			
Heat Flow	(kW)	6.980e-005	1.156e-003			

Unit Ops

Operation Name	Operation Type	Feeds	Products	Ignored	Calc Level
Condenser @COL1	Partial Condenser	To Condenser @COL1 CND1 Q @COL1	LT-GAS-1 @COL1 Reflux @COL1 CND1 Q @COL1	No	500.0 *
Reboiler @COL1	Reboiler	To Reboiler @COL1 RB1 Q @COL1	MEOH-8 @COL1 Boilup @COL1	No	500.0 *
Main TS @COL1	Tray Section	Reflux @COL1 Boilup @COL1 MEOH-7 @COL1	To Reboiler @COL1 To Condenser @COL1	No	500.0 *

Workbook: T-101 (COL2)

Material Streams

Fluid Pkg: All

Name		Reflux @COL2	To Condenser @COL2	Boilup @COL2	To Reboiler @COL2	MEOH-9 @COL2
Vapour Fraction		0.0000	1.0000	1.0000	0.0000	0.0000
Temperature	(C)	40.00	72.51	108.6	108.4	40.00
Pressure	(kPa)	137.9	137.9	137.9	137.9	137.9
Molar Flow	(gmole/h)	1.223	2.149	2.032	2.328	0.9263
Mass Flow	(kg/d)	0.9404	1.653	0.9105	1.042	0.7124
Liquid Volume Flow	(m3/h)	4.924e-005	8.655e-005	3.879e-005	4.437e-005	3.731e-005
Heat Flow	(kW)	-8.102e-002	-0.1190	-0.1338	-0.1797	-6.138e-002
Name		WATER-2 @COL2	MEOH-8 @COL2			
Vapour Fraction		0.0000	0.0000			
Temperature	(C)	108.6	79.08			
Pressure	(kPa)	137.9	137.9			
Molar Flow	(gmole/h)	0.2964	1.223			
Mass Flow	(kg/d)	0.1316	0.8441			
Liquid Volume Flow	(m3/h)	5.580e-006	4.289e-005			
Heat Flow	(kW)	-2.291e-002	-8.381e-002			

Workbook: T-101 (COL2) (continued)

Compositions

Fluid Pkg: All

Name	Reflux @COL2	To Condenser @COL2	Boilup @COL2	To Reboiler @COL2	MEOH-9 @COL2
Comp Mole Frac (H2O)	0.0000	0.0000	0.9532	0.9547	0.0000
Comp Mole Frac (Oxygen)	0.0000	0.0000	0.0000	0.0000	0.0000
Comp Mole Frac (Hydrogen)	0.0000	0.0000	0.0000	0.0000	0.0000
Comp Mole Frac (CO)	0.0000	0.0000	0.0000	0.0000	0.0000
Comp Mole Frac (CO2)	0.0000	0.0000	0.0000	0.0000	0.0000
Comp Mole Frac (Methanol)	0.9998	0.9998	0.0468	0.0453	0.9998
Comp Mole Frac (diM-Ether)	0.0000	0.0000	0.0000	0.0000	0.0000
Comp Mole Frac (1-Propanol)	0.0002	0.0002	0.0000	0.0000	0.0002

Name	WATER-2 @COL2	MEOH-8 @COL2			
Comp Mole Frac (H2O)	0.9652	0.2340			
Comp Mole Frac (Oxygen)	0.0000	0.0000			
Comp Mole Frac (Hydrogen)	0.0000	0.0000			
Comp Mole Frac (CO)	0.0000	0.0000			
Comp Mole Frac (CO2)	0.0000	0.0000			
Comp Mole Frac (Methanol)	0.0348	0.7659			
Comp Mole Frac (diM-Ether)	0.0000	0.0000			
Comp Mole Frac (1-Propanol)	0.0000	0.0001			

Energy Streams

Fluid Pkg: All

Name	CND2 Q @COL2	RB2 Q @COL2			
Heat Flow (kW)	2.341e-002	2.294e-002			

Unit Ops

Operation Name	Operation Type	Feeds	Products	Ignored	Calc Level
Reboiler @COL2	Reboiler	To Reboiler @COL2 RB2 Q @COL2	WATER-2 @COL2 Boilup @COL2	No	500.0 *
Main TS @COL2	Tray Section	Reflux @COL2 Boilup @COL2 MEOH-8 @COL2	To Reboiler @COL2 To Condenser @COL2	No	500.0 *
Condenser @COL2	Total Condenser	To Condenser @COL2 CND2 Q @COL2	MEOH-9 @COL2 Reflux @COL2 CND2 Q @COL2	No	500.0 *

Workbook: Case (Main)

Streams

Fluid Pkg: All

Name		SYNG-2	M-RECY2	1	SYNG-3	SYNG-5
Vapour Fraction		1.0000	1.0000	0.9990	1.0000	1.0000
Temperature	(C)	180.6	46.00	62.69	71.18	216.7 *
Pressure	(kPa)	7501 *	6977	6977	7515 *	7460
Molar Flow	(gmole/h)	4.140	33.35	37.49	37.49	37.49
Mass Flow	(kg/d)	0.8996	1.866	2.765	2.765	2.765
Std Ideal Liq Vol Flow	(m3/h)	1.274e-004	9.666e-004	1.094e-003	1.094e-003	1.094e-003
Heat Flow	(kW)	-4.488e-002	-1.486e-002	-5.974e-002	-5.672e-002	-1.232e-002
Molar Enthalpy	(kJ/kgmole)	-3.903e+004	-1604	-5737	-5448	-1183
Name		MEOH-2	MEOH-4	Vap Out	2	3
Vapour Fraction		1.0000	0.9893	1.0000	0.0000	0.0000
Temperature	(C)	226.7	90.59	226.7 *	226.7	226.7
Pressure	(kPa)	7060	7005	7060	7060	7060
Molar Flow	(gmole/h)	35.60	35.60	35.60	0.0000	0.0000
Mass Flow	(kg/d)	2.765	2.765	2.765	0.0000	0.0000
Std Ideal Liq Vol Flow	(m3/h)	1.039e-003	1.039e-003	1.039e-003	0.0000	0.0000
Heat Flow	(kW)	-3.328e-002	-7.768e-002	-3.328e-002	-0.0000	-0.0000
Molar Enthalpy	(kJ/kgmole)	-3365	-7855	-3365	-3175	-3174
Name		MEOH-6	MEOH-5	MEOH-7	MEOH-8	LT-GAS-1
Vapour Fraction		0.0000	0.9657	0.0042	0.0000	1.0000
Temperature	(C)	46.00	46.00 *	48.18	78.98	-27.54
Pressure	(kPa)	6977	6977	206.8 *	137.9	137.9
Molar Flow	(gmole/h)	1.221	35.60	1.221	1.216	4.639e-003
Mass Flow	(kg/d)	0.8416	2.765	0.8416	0.8408	8.556e-004
Std Ideal Liq Vol Flow	(m3/h)	4.289e-005	1.039e-003	4.289e-005	4.274e-005	1.508e-007
Heat Flow	(kW)	-8.433e-002	-9.965e-002	-8.433e-002	-8.332e-002	-6.123e-005
Molar Enthalpy	(kJ/kgmole)	-2.487e+005	-1.008e+004	-2.487e+005	-2.466e+005	-4.752e+004
Name		M-RECY	PURGE-1	PURGE-2	LT-GAS	WATER-OUT-2
Vapour Fraction		1.0000	1.0000	1.0000	1.0000	0.0000
Temperature	(C)	46.00	46.00	47.20	46.85	108.4
Pressure	(kPa)	6977	6977	137.9	137.9	137.9
Molar Flow	(gmole/h)	34.38	1.031	1.031	1.036	0.2948
Mass Flow	(kg/d)	1.923	0.0577	0.0577	5.855e-002	0.1321
Std Ideal Liq Vol Flow	(m3/h)	9.965e-004	2.989e-005	2.989e-005	3.004e-005	5.630e-006
Heat Flow	(kW)	-1.532e-002	-4.596e-004	-4.596e-004	-5.208e-004	-2.275e-002
Molar Enthalpy	(kJ/kgmole)	-1604	-1604	-1604	-1810	-2.778e+005
Name		MEOH-9	CO2, Water In	H2,CO,H2O Out	9	Sweep Gas In
Vapour Fraction		0.0000	1.0000	1.0000	1.0000	1.0000
Temperature	(C)	40.00	800.3	800.0	800.0 *	800.3
Pressure	(kPa)	137.9	137.9	135.1	137.9	135.1
Molar Flow	(gmole/h)	0.9214	5.366	5.366	5.366	1.000e-010 *
Mass Flow	(kg/d)	0.7087	2.787	1.306	2.787	4.357e-011
Std Ideal Liq Vol Flow	(m3/h)	3.711e-005	1.376e-004	1.568e-004	1.376e-004	1.815e-015
Heat Flow	(kW)	-6.105e-002	-0.3241	-6.426e-002	-0.3241	-5.842e-012
Molar Enthalpy	(kJ/kgmole)	-2.385e+005	-2.174e+005	-4.311e+004	-2.174e+005	-2.103e+005

Workbook: Case (Main) (continued)

Streams (continued)

Fluid Pkg: All

Name		Hot O2	400	8	Warm O2	25
Vapour Fraction		1.0000	0.0000	0.2912	1.0000	1.0000
Temperature	(C)	800.0	800.3	32.48	309.6	124.0
Pressure	(kPa)	135.1	137.9	137.9	135.1	135.1
Molar Flow	(gmole/h)	1.928	0.0000	5.366	1.928	5.366
Mass Flow	(kg/d)	1.481	0.0000	2.787	1.481	1.306
Std Ideal Liq Vol Flow	(m3/h)	5.424e-005	0.0000	1.376e-004	5.424e-005	1.568e-004
Heat Flow	(kW)	1.352e-002	-0.0000	-0.4146	4.658e-003	-9.640e-002
Molar Enthalpy	(kJ/kgmole)	2.525e+004	-2.174e+005	-2.781e+005	8697	-6.467e+004
Name		WATER-IN	CO2-IN	4	5	6
Vapour Fraction		0.0000	1.0000	1.0000	0.9731	1.0000
Temperature	(C)	21.00 *	21.00 *	775.0 *	99.00 *	124.0 *
Pressure	(kPa)	137.9	137.9 *	137.9	137.9	135.1
Molar Flow	(gmole/h)	3.193	0.9468	5.366	5.366	0.6552
Mass Flow	(kg/d)	1.381 *	1.000 *	2.787	2.787	0.1595
Std Ideal Liq Vol Flow	(m3/h)	5.764e-005	5.048e-005	1.376e-004	1.376e-004	1.915e-005
Heat Flow	(kW)	-0.2538	-0.1036	-0.3257	-0.3667	-1.177e-002
Molar Enthalpy	(kJ/kgmole)	-2.862e+005	-3.940e+005	-2.185e+005	-2.460e+005	-6.467e+004
Name		7	10	SYNG-1	13	14
Vapour Fraction		1.0000	1.0000	1.0000	0.0000	0.0000
Temperature	(C)	124.0	127.0	26.67 *	26.67	26.67
Pressure	(kPa)	135.1	137.9	135.1	135.1	137.9
Molar Flow	(gmole/h)	4.711	0.6552	4.140	0.5713	0.5713
Mass Flow	(kg/d)	1.147	0.1595	0.8996	0.2470	0.2470
Std Ideal Liq Vol Flow	(m3/h)	1.377e-004	1.915e-005	1.274e-004	1.031e-005	1.031e-005
Heat Flow	(kW)	-8.463e-002	-1.175e-002	-5.006e-002	-4.535e-002	-4.535e-002
Molar Enthalpy	(kJ/kgmole)	-6.467e+004	-6.458e+004	-4.354e+004	-2.858e+005	-2.858e+005
Name		SYNG-RCY	O2-OUT	18	17	11
Vapour Fraction		0.5323	1.0000	0.3205	0.2912	1.0000
Temperature	(C)	59.36	57.48	56.43	32.48 *	124.0
Pressure	(kPa)	137.9	135.1	137.9	137.9 *	135.1
Molar Flow	(gmole/h)	1.227	1.928	5.366	5.366 *	5.366
Mass Flow	(kg/d)	0.4065	1.481	2.787	2.787	1.306
Std Ideal Liq Vol Flow	(m3/h)	2.946e-005	5.424e-005	1.376e-004	1.376e-004	1.568e-004
Heat Flow	(kW)	-5.710e-002	5.047e-004	-0.4104	-0.4146	-9.640e-002
Molar Enthalpy	(kJ/kgmole)	-1.676e+005	942.2	-2.753e+005	-2.781e+005	-6.467e+004
Name		19	20	21	22	23
Vapour Fraction		1.0000	1.0000	1.0000	1.0000 *	1.0000
Temperature	(C)	176.7 *	54.44 *	176.7 *	63.85	176.7 *
Pressure	(kPa)	416.2	416.2	996.5	996.5	2202
Molar Flow	(gmole/h)	4.140	4.140	4.140	4.140	4.140
Mass Flow	(kg/d)	0.8996	0.8996	0.8996	0.8996	0.8996
Std Ideal Liq Vol Flow	(m3/h)	1.274e-004	1.274e-004	1.274e-004	1.274e-004	1.274e-004
Heat Flow	(kW)	-4.499e-002	-4.914e-002	-4.500e-002	-4.884e-002	-4.500e-002
Molar Enthalpy	(kJ/kgmole)	-3.913e+004	-4.273e+004	-3.913e+004	-4.247e+004	-3.913e+004

Workbook: Case (Main) (continued)

Streams (continued)

Fluid Pkg: All

Name		24	26	27	12	COMB-PROD
Vapour Fraction		1.0000 *	1.0000	1.0000 *	0.9990	1.0000
Temperature	(C)	80.74	176.7 *	95.04	62.69 *	1000 *
Pressure	(kPa)	2202	4243	4243	6977 *	137.9
Molar Flow	(gmole/h)	4.140	4.140	4.140	37.49 *	1.049
Mass Flow	(kg/d)	0.8996	0.8996	0.8996	2.765	0.4604
Std Ideal Liq Vol Flow	(m3/h)	1.274e-004	1.274e-004	1.274e-004	1.094e-003	1.932e-005
Heat Flow	(kW)	-4.829e-002	-4.501e-002	-4.784e-002	-5.972e-002	-5.986e-002
Molar Enthalpy	(kJ/kgmole)	-4.200e+004	-3.914e+004	-4.160e+004	-5736	-2.054e+005
Name		28	O2-IN-1	WATER-OUT-1	CO2-OUT	COMB-PROD-2
Vapour Fraction		0.0000	1.0000	0.0000	1.0000	1.0000
Temperature	(C)	1000	15.56 *	26.67	26.67 *	1000 *
Pressure	(kPa)	137.9	137.9 *	137.9	137.9	137.9
Molar Flow	(gmole/h)	0.0000	0.5232	2.858	0.9562	2.765
Mass Flow	(kg/d)	0.0000	0.4018 *	1.237	0.9943	1.771
Std Ideal Liq Vol Flow	(m3/h)	0.0000	1.472e-005	5.165e-005	5.009e-005	8.242e-005
Heat Flow	(kW)	-0.0000	-4.193e-005	-0.2269	-0.1034	-0.1928
Molar Enthalpy	(kJ/kgmole)	-2.054e+005	-288.6	-2.858e+005	-3.892e+005	-2.511e+005
Name		16	29	O2-IN-2	COMP-2 W	MEOH-1 Q
Vapour Fraction		---	0.0000	1.0000	---	---
Temperature	(C)	---	1000	26.67 *	---	---
Pressure	(kPa)	---	137.9	137.9 *	---	---
Molar Flow	(gmole/h)	---	0.0000	1.383	---	---
Mass Flow	(kg/d)	---	0.0000	1.062 *	---	---
Std Ideal Liq Vol Flow	(m3/h)	---	0.0000	3.889e-005	---	---
Heat Flow	(kW)	---	-0.0000	1.380e-005	2.999e-003	-2.095e-002
Molar Enthalpy	(kJ/kgmole)	---	-2.511e+005	35.92	---	---
Name		COND Q	CND1 Q	RB1 Q	CND2 Q	RB2 Q
Vapour Fraction		---	---	---	---	---
Temperature	(C)	---	---	---	---	---
Pressure	(kPa)	---	---	---	---	---
Molar Flow	(gmole/h)	---	---	---	---	---
Mass Flow	(kg/d)	---	---	---	---	---
Std Ideal Liq Vol Flow	(m3/h)	---	---	---	---	---
Heat Flow	(kW)	2.197e-002	6.025e-005	1.013e-003	2.329e-002	0.0228
Molar Enthalpy	(kJ/kgmole)	---	---	---	---	---
Name		Electrolysis Power	Process Heat	Top Heat Q	Preheat Q	Circ Pwr
Vapour Fraction		---	---	---	---	---
Temperature	(C)	---	---	---	---	---
Pressure	(kPa)	---	---	---	---	---
Molar Flow	(gmole/h)	---	---	---	---	---
Mass Flow	(kg/d)	---	---	---	---	---
Std Ideal Liq Vol Flow	(m3/h)	---	---	---	---	---
Heat Flow	(kW)	0.2733	-6.906e-010	1.609e-003	4.375e-002	1.624e-005
Molar Enthalpy	(kJ/kgmole)	---	---	---	---	---

Workbook: Case (Main) (continued)

Streams (continued)

Fluid Pkg: All

Name		Amb Q	Water Pump Pwr	ST1 PWR	IC1 Q	IC2 Q
Vapour Fraction		---	---	---	---	---
Temperature	(C)	---	---	---	---	---
Pressure	(kPa)	---	---	---	---	---
Molar Flow	(gmole/h)	---	---	---	---	---
Mass Flow	(kg/d)	---	---	---	---	---
Std Ideal Liq Vol Flow	(m3/h)	---	---	---	---	---
Heat Flow	(kW)	-1.078e-002	1.045e-008	5.069e-003	4.147e-003	3.843e-003
Molar Enthalpy	(kJ/kgmole)	---	---	---	---	---
Name		**ST2 PWR**	**ST3 PWR**	**IC3 Q**	**STG4 PWR**	**IC4 Q**
Vapour Fraction		---	---	---	---	---
Temperature	(C)	---	---	---	---	---
Pressure	(kPa)	---	---	---	---	---
Molar Flow	(gmole/h)	---	---	---	---	---
Mass Flow	(kg/d)	---	---	---	---	---
Std Ideal Liq Vol Flow	(m3/h)	---	---	---	---	---
Heat Flow	(kW)	4.144e-003	3.837e-003	3.290e-003	3.282e-003	2.826e-003
Molar Enthalpy	(kJ/kgmole)	---	---	---	---	---
Name		**STG5 PWR**	**COMB-Q-1**	**AMB-Q-1**	**COMB-Q-2**	
Vapour Fraction		---	---	---	---	
Temperature	(C)	---	---	---	---	
Pressure	(kPa)	---	---	---	---	
Molar Flow	(gmole/h)	---	---	---	---	
Mass Flow	(kg/d)	---	---	---	---	
Std Ideal Liq Vol Flow	(m3/h)	---	---	---	---	
Heat Flow	(kW)	2.956e-003	-5.930e-002	-7.759e-002	-0.1318	
Molar Enthalpy	(kJ/kgmole)	---	---	---	---	

Composition

Fluid Pkg: All

Name	SYNG-2	M-RECY2	1	SYNG-3	SYNG-5
Master Comp Mole Frac (H2O)	0.0260	0.0003	0.0032	0.0032	0.0032
Master Comp Mole Frac (Oxygen)	0.0000	0.0000	0.0000	0.0000	0.0000
Master Comp Mole Frac (Hydrogen)	0.7453	0.9899	0.9629	0.9629	0.9629
Master Comp Mole Frac (CO)	0.1863	0.0016	0.0220	0.0220	0.0220
Master Comp Mole Frac (CO2)	0.0424	0.0017	0.0062	0.0062	0.0062
Master Comp Mole Frac (Methanol)	0.0000	0.0063	0.0056	0.0056	0.0056
Master Comp Mole Frac (diM-Ether)	0.0000	0.0001	0.0001	0.0001	0.0001
Master Comp Mole Frac (1-Propanol)	0.0000	0.0000	0.0000	0.0000	0.0000
Name	**MEOH-2**	**MEOH-4**	**Vap Out**	**2**	**3**
Master Comp Mole Frac (H2O)	0.0082	0.0082	0.0082	0.0074	0.0074
Master Comp Mole Frac (Oxygen)	0.0000	0.0000	0.0000	0.0000	0.0000
Master Comp Mole Frac (Hydrogen)	0.9561	0.9561	0.9561	0.9568	0.9569
Master Comp Mole Frac (CO)	0.0015	0.0015	0.0015	0.0015	0.0015
Master Comp Mole Frac (CO2)	0.0017	0.0017	0.0017	0.0017	0.0017
Master Comp Mole Frac (Methanol)	0.0323	0.0323	0.0324	0.0324	0.0324
Master Comp Mole Frac (diM-Ether)	0.0001	0.0001	0.0001	0.0001	0.0001
Master Comp Mole Frac (1-Propanol)	0.0000	0.0000	0.0000	0.0000	0.0000

Workbook: Case (Main) (continued)

Composition (continued)

Fluid Pkg: All

Name	MEOH-6	MEOH-5	MEOH-7	MEOH-8	LT-GAS-1
Master Comp Mole Frac (H2O)	0.2302	0.0082	0.2302	0.2310	0.0000
Master Comp Mole Frac (Oxygen)	0.0000	0.0000	0.0000	0.0000	0.0000
Master Comp Mole Frac (Hydrogen)	0.0033	0.9561	0.0033	0.0000	0.8640
Master Comp Mole Frac (CO)	0.0000	0.0015	0.0000	0.0000	0.0034
Master Comp Mole Frac (CO2)	0.0004	0.0017	0.0004	0.0000	0.1005
Master Comp Mole Frac (Methanol)	0.7659	0.0323	0.7659	0.7688	0.0039
Master Comp Mole Frac (diM-Ether)	0.0001	0.0001	0.0001	0.0000	0.0283
Master Comp Mole Frac (1-Propanol)	0.0002	0.0000	0.0002	0.0002	0.0000

Name	M-RECY	PURGE-1	PURGE-2	LT-GAS	WATER-OUT-2
Master Comp Mole Frac (H2O)	0.0003	0.0003	0.0003	0.0003	0.9530
Master Comp Mole Frac (Oxygen)	0.0000	0.0000	0.0000	0.0000	0.0000
Master Comp Mole Frac (Hydrogen)	0.9899	0.9899	0.9899	0.9893	0.0000
Master Comp Mole Frac (CO)	0.0016	0.0016	0.0016	0.0016	0.0000
Master Comp Mole Frac (CO2)	0.0017	0.0017	0.0017	0.0022	0.0000
Master Comp Mole Frac (Methanol)	0.0063	0.0063	0.0063	0.0063	0.0470
Master Comp Mole Frac (diM-Ether)	0.0001	0.0001	0.0001	0.0003	0.0000
Master Comp Mole Frac (1-Propanol)	0.0000	0.0000	0.0000	0.0000	0.0000

Name	MEOH-9	CO2, Water In	H2,CO,H2O Out	9	Sweep Gas In
Master Comp Mole Frac (H2O)	0.0000	0.7187	0.1441	0.7191	0.9900 *
Master Comp Mole Frac (Oxygen)	0.0000	0.0000	0.0000	0.0000	0.0100 *
Master Comp Mole Frac (Hydrogen)	0.0000	0.0803	0.6549	0.0800	0.0000 *
Master Comp Mole Frac (CO)	0.0000	0.0196	0.1637	0.0200	0.0000 *
Master Comp Mole Frac (CO2)	0.0000	0.1814	0.0373	0.1810	0.0000 *
Master Comp Mole Frac (Methanol)	0.9998	0.0000	0.0000	0.0000	0.0000 *
Master Comp Mole Frac (diM-Ether)	0.0000	0.0000	0.0000	0.0000	0.0000 *
Master Comp Mole Frac (1-Propanol)	0.0002	0.0000	0.0000	0.0000	0.0000 *

Name	Hot O2	400	8	Warm O2	25
Master Comp Mole Frac (H2O)	0.0000	0.7187	0.7191	0.0000	0.1441
Master Comp Mole Frac (Oxygen)	1.0000	0.0000	0.0000	1.0000	0.0000
Master Comp Mole Frac (Hydrogen)	0.0000	0.0803	0.0800	0.0000	0.6549
Master Comp Mole Frac (CO)	0.0000	0.0196	0.0200	0.0000	0.1637
Master Comp Mole Frac (CO2)	0.0000	0.1814	0.1810	0.0000	0.0373
Master Comp Mole Frac (Methanol)	0.0000	0.0000	0.0000	0.0000	0.0000
Master Comp Mole Frac (diM-Ether)	0.0000	0.0000	0.0000	0.0000	0.0000
Master Comp Mole Frac (1-Propanol)	0.0000	0.0000	0.0000	0.0000	0.0000

Name	WATER-IN	CO2-IN	4	5	6
Master Comp Mole Frac (H2O)	1.0000 *	0.0000 *	0.7191	0.7191	0.1441
Master Comp Mole Frac (Oxygen)	0.0000 *	0.0000 *	0.0000	0.0000	0.0000
Master Comp Mole Frac (Hydrogen)	0.0000 *	0.0000 *	0.0800	0.0800	0.6549
Master Comp Mole Frac (CO)	0.0000 *	0.0000 *	0.0200	0.0200	0.1637
Master Comp Mole Frac (CO2)	0.0000 *	1.0000 *	0.1810	0.1810	0.0373
Master Comp Mole Frac (Methanol)	0.0000 *	0.0000 *	0.0000	0.0000	0.0000
Master Comp Mole Frac (diM-Ether)	0.0000 *	0.0000 *	0.0000	0.0000	0.0000
Master Comp Mole Frac (1-Propanol)	0.0000 *	0.0000 *	0.0000	0.0000	0.0000

Workbook: Case (Main) (continued)

Composition (continued)

Fluid Pkg: All

Name	7	10	SYNG-1	13	14
Master Comp Mole Frac (H2O)	0.1441	0.1441	0.0260	0.9999	0.9999
Master Comp Mole Frac (Oxygen)	0.0000	0.0000	0.0000	0.0000	0.0000
Master Comp Mole Frac (Hydrogen)	0.6549	0.6549	0.7453	0.0001	0.0001
Master Comp Mole Frac (CO)	0.1637	0.1637	0.1863	0.0000	0.0000
Master Comp Mole Frac (CO2)	0.0373	0.0373	0.0424	0.0000	0.0000
Master Comp Mole Frac (Methanol)	0.0000	0.0000	0.0000	0.0000	0.0000
Master Comp Mole Frac (diM-Ether)	0.0000	0.0000	0.0000	0.0000	0.0000
Master Comp Mole Frac (1-Propanol)	0.0000	0.0000	0.0000	0.0000	0.0000

Name	SYNG-RCY	O2-OUT	18	17	11
Master Comp Mole Frac (H2O)	0.5427	0.0000	0.7191	0.7191 *	0.1441
Master Comp Mole Frac (Oxygen)	0.0000	1.0000	0.0000	0.0000 *	0.0000
Master Comp Mole Frac (Hydrogen)	0.3499	0.0000	0.0800	0.0800 *	0.6549
Master Comp Mole Frac (CO)	0.0875	0.0000	0.0200	0.0200 *	0.1637
Master Comp Mole Frac (CO2)	0.0199	0.0000	0.1810	0.1810 *	0.0373
Master Comp Mole Frac (Methanol)	0.0000	0.0000	0.0000	0.0000 *	0.0000
Master Comp Mole Frac (diM-Ether)	0.0000	0.0000	0.0000	0.0000 *	0.0000
Master Comp Mole Frac (1-Propanol)	0.0000	0.0000	0.0000	0.0000 *	0.0000

Name	19	20	21	22	23
Master Comp Mole Frac (H2O)	0.0260	0.0260	0.0260	0.0260	0.0260
Master Comp Mole Frac (Oxygen)	0.0000	0.0000	0.0000	0.0000	0.0000
Master Comp Mole Frac (Hydrogen)	0.7453	0.7453	0.7453	0.7453	0.7453
Master Comp Mole Frac (CO)	0.1863	0.1863	0.1863	0.1863	0.1863
Master Comp Mole Frac (CO2)	0.0424	0.0424	0.0424	0.0424	0.0424
Master Comp Mole Frac (Methanol)	0.0000	0.0000	0.0000	0.0000	0.0000
Master Comp Mole Frac (diM-Ether)	0.0000	0.0000	0.0000	0.0000	0.0000
Master Comp Mole Frac (1-Propanol)	0.0000	0.0000	0.0000	0.0000	0.0000

Name	24	26	27	12	COMB-PROD
Master Comp Mole Frac (H2O)	0.0260	0.0260	0.0260	0.0032 *	0.9897
Master Comp Mole Frac (Oxygen)	0.0000	0.0000	0.0000	0.0000 *	0.0001
Master Comp Mole Frac (Hydrogen)	0.7453	0.7453	0.7453	0.9629 *	0.0000
Master Comp Mole Frac (CO)	0.1863	0.1863	0.1863	0.0220 *	0.0000
Master Comp Mole Frac (CO2)	0.0424	0.0424	0.0424	0.0062 *	0.0099
Master Comp Mole Frac (Methanol)	0.0000	0.0000	0.0000	0.0056 *	0.0000
Master Comp Mole Frac (diM-Ether)	0.0000	0.0000	0.0000	0.0001 *	0.0003
Master Comp Mole Frac (1-Propanol)	0.0000	0.0000	0.0000	0.0000 *	0.0000

Name	28	O2-IN-1	WATER-OUT-1	CO2-OUT	COMB-PROD-2
Master Comp Mole Frac (H2O)	0.9897	0.0000 *	0.9994	0.0259	0.6664
Master Comp Mole Frac (Oxygen)	0.0001	1.0000 *	0.0000	0.0013	0.0004
Master Comp Mole Frac (Hydrogen)	0.0000	0.0000 *	0.0000	0.0000	0.0000
Master Comp Mole Frac (CO)	0.0000	0.0000 *	0.0000	0.0000	0.0000
Master Comp Mole Frac (CO2)	0.0099	0.0000 *	0.0006	0.9723	0.3332
Master Comp Mole Frac (Methanol)	0.0000	0.0000 *	0.0000	0.0000	0.0000
Master Comp Mole Frac (diM-Ether)	0.0003	0.0000 *	0.0000	0.0003	0.0000
Master Comp Mole Frac (1-Propanol)	0.0000	0.0000 *	0.0000	0.0002	0.0001

Workbook: Case (Main) (continued)

Composition (continued)

Fluid Pkg: All

Name	16	29	O2-IN-2		
Master Comp Mole Frac (H2O)	---	0.6664	0.0000 *		
Master Comp Mole Frac (Oxygen)	---	0.0004	1.0000 *		
Master Comp Mole Frac (Hydrogen)	---	0.0000	0.0000 *		
Master Comp Mole Frac (CO)	---	0.0000	0.0000 *		
Master Comp Mole Frac (CO2)	---	0.3332	0.0000 *		
Master Comp Mole Frac (Methanol)	---	0.0000	0.0000 *		
Master Comp Mole Frac (diM-Ether)	---	0.0000	0.0000 *		
Master Comp Mole Frac (1-Propanol)	---	0.0001	0.0000 *		

Unit Ops

Operation Name	Operation Type	Feeds	Products	Ignored	Calc Level
COMP-2	Compressor	12 COMP-2 W	SYNG-3	No	500.0 *
Syngas Circulator	Compressor	6 Circ Pwr	10	No	500.0 *
SG CMP STG4	Compressor	24 STG4 PWR	26	No	500.0 *
SG CMP STG1	Compressor	SYNG-1 ST1 PWR	19	No	500.0 *
SG CMP STG2	Compressor	20 ST2 PWR	21	No	500.0 *
SG CMP STG3	Compressor	22 ST3 PWR	23	No	500.0 *
SG CMP STG 5	Compressor	27 STG5 PWR	SYNG-2	No	500.0 *
M3	Mixer	SYNG-2 M-RECY2	1	No	500.0 *
MIX-100	Mixer	LT-GAS-1 PURGE-2	LT-GAS	No	500.0 *
M1	Mixer	WATER-IN CO2-IN SYNG-RCY	8	No	500.0 *
M2	Mixer	14 10	SYNG-RCY	No	500.0 *
HX	LNG	SYNG-3 MEOH-2	SYNG-5 MEOH-4	No	500.0 *
Hi Temp Recup	LNG	H2,CO,H2O Out 5 Hot O2	25 4 Warm O2	No	500.0 *
Lo Temp Recup	LNG	25 17 Warm O2	11 18 O2-OUT	No	500.0 *
MEOH-1	Equilibrium Reactor	SYNG-5 MEOH-1 Q	2 Vap Out MEOH-1 Q	No	500.0 *
RWGS 1	Equilibrium Reactor	9	400 CO2, Water In	No	500.0 *
MEOH-2	Conversion Reactor	Vap Out	3 MEOH-2	No	500.0 *
COMB-1	Conversion Reactor	LT-GAS O2-IN-1	28 COMB-PROD	No	500.0 *

Workbook: Case (Main) (continued)

Unit Ops (continued)

Operation Name	Operation Type	Feeds	Products	Ignored	Calc Level
COMB-1	Conversion Reactor	COMB-Q-1	COMB-Q-1	No	500.0 *
COMB-2	Conversion Reactor	MEOH-9	29	No	500.0 *
		O2-IN-2	COMB-PROD-2		
		COMB-Q-2	COMB-Q-2		
KO-DRM	Separator	MEOH-5	MEOH-6	No	500.0 *
			M-RECY		
Water Knockout Tank	Separator	7	13	No	500.0 *
		Amb Q	SYNG-1		
			Amb Q		
KO-DRM 2	Separator	COMB-PROD	WATER-OUT-1	No	500.0 *
		COMB-PROD-2	CO2-OUT		
		AMB-Q-1	AMB-Q-1		
CONDNSR	Cooler	MEOH-4	MEOH-5	No	500.0 *
			COND Q		
INT CLR 1	Cooler	19	20	No	500.0 *
			IC1 Q		
INT CLR 2	Cooler	21	22	No	500.0 *
			IC2 Q		
INT CLR 3	Cooler	23	24	No	500.0 *
			IC3 Q		
INT CLR 4	Cooler	26	27	No	500.0 *
			IC4 Q		
VALVE-3	Valve	MEOH-6	MEOH-7	No	500.0 *
VALVE-2	Valve	PURGE-1	PURGE-2	No	500.0 *
T-100	Distillation	MEOH-7	MEOH-8	No	2500 *
		RB1 Q	LT-GAS-1		
			CND1 Q		
T-101	Distillation	MEOH-8	WATER-OUT-2	No	2500 *
		RB2 Q	MEOH-9		
			CND2 Q		
RCY-4	Recycle	8	17	No	3500 *
RCY-1	Recycle	1	12	No	3500 *
TEE-100	Tee	M-RECY	M-RECY2	No	500.0 *
			PURGE-1		
T1	Tee	11	6	No	500.0 *
			7		
High Temperature Co-Electrol	Standard Sub-Flowsheet	Sweep Gas In	Hot O2	No	2500 *
		CO2, Water In	H2,CO,H2O Out		
		Process Heat			
		Electrolysis Power			
Topping Heat	Heater	4	9	No	500.0 *
		Top Heat Q			
Preheater	Heater	18	5	No	500.0 *
		Preheat Q			
SPRDSHT-1	Spreadsheet			No	500.0 *
Water Pump	Pump	13	14	No	500.0 *
		Water Pump Pwr			

Honeywell	Company Name Not Available Calgary, Alberta CANADA	Case Name: \\vmware-host\...\PSA Results\MeOH Production w Comb ratio 4.usc Unit Set: NASA Date/Time: Wednesday Feb 16 2011, 10:01:54

Workbook: High Temperature Co-Electrolysis (TPL2)

Streams

Fluid Pkg: All

Name		Sweep Gas In @TPL2	O2 Out @TPL2	Gas Products @TPL2	Liquid @TPL2	Anode @TPL2
Vapour Fraction		1.0000	1.0000	1.0000	0.0000	1.0000
Temperature	(C)	800.3	800.0	800.0 *	800.0	800.0
Pressure	(kPa)	135.1	135.1	136.5	136.5	135.1
Molar Flow	(gmole/h)	1.000e-010	1.928	7.294	0.0000	1.928
Mass Flow	(kg/d)	4.357e-011	1.481	2.787	0.0000	1.481
Liquid Volume Flow	(m3/h)	1.815e-015	5.424e-005	2.336e-004	0.0000	5.424e-005
Heat Flow	(kW)	-5.842e-012	1.352e-002	-5.820e-002	-0.0000	1.352e-002
Molar Enthalpy	(kJ/kgmole)	-2.103e+005	2.525e+004	-2.872e+004	-2.873e+004	2.525e+004
Name		H2,CO,H2O Out @TP	Cathode @TPL2	2 @TPL2	CO2, Water In @TPL2	Electrolysis Heatiing @
Vapour Fraction		1.0000	1.0000	0.0000	1.0000	---
Temperature	(C)	800.0 *	800.0 *	800.0	800.3	---
Pressure	(kPa)	135.1	135.1	135.1	137.9	---
Molar Flow	(gmole/h)	5.366	5.366	0.0000	5.366	---
Mass Flow	(kg/d)	1.306	1.306	0.0000	2.787	---
Liquid Volume Flow	(m3/h)	1.568e-004	1.793e-004	0.0000	1.376e-004	---
Heat Flow	(kW)	-6.426e-002	-7.173e-002	-0.0000	-0.3241	0.2659
Molar Enthalpy	(kJ/kgmole)	-4.311e+004	-4.812e+004	-4.311e+004	-2.174e+005	---
Name		Process Heat @TPL2	Shift Reactor 2 Heat @	Electrolysis Power @T		
Vapour Fraction		---	---	---		
Temperature	(C)	---	---	---		
Pressure	(kPa)	---	---	---		
Molar Flow	(gmole/h)	---	---	---		
Mass Flow	(kg/d)	---	---	---		
Liquid Volume Flow	(m3/h)	---	---	---		
Heat Flow	(kW)	-6.906e-010	7.466e-003	0.2733		
Molar Enthalpy	(kJ/kgmole)	---	---	---		

Composition

Fluid Pkg: All

Name	Sweep Gas In @TPL2	O2 Out @TPL2	Gas Products @TPL2	Liquid @TPL2	Anode @TPL2
Comp Mole Frac (H2O)	0.9900	0.0000	0.0000	0.0000	0.0000
Comp Mole Frac (Oxygen)	0.0100	1.0000	0.2643	0.2643	1.0000
Comp Mole Frac (Hydrogen)	0.0000	0.0000	0.5878	0.5878	0.0000
Comp Mole Frac (CO)	0.0000	0.0000	0.0144	0.0144	0.0000
Comp Mole Frac (CO2)	0.0000	0.0000	0.1334	0.1334	0.0000
Comp Mole Frac (Methanol)	0.0000	0.0000	0.0000	0.0000	0.0000
Comp Mole Frac (diM-Ether)	0.0000	0.0000	0.0000	0.0000	0.0000
Comp Mole Frac (1-Propanol)	0.0000	0.0000	0.0000	0.0000	0.0000
Name	H2,CO,H2O Out @TP	Cathode @TPL2	2 @TPL2	CO2, Water In @TPL2	
Comp Mole Frac (H2O)	0.1441	0.0000	0.1441	0.7187	
Comp Mole Frac (Oxygen)	0.0000	0.0000	0.0000	0.0000	
Comp Mole Frac (Hydrogen)	0.6549	0.7990	0.6549	0.0803	
Comp Mole Frac (CO)	0.1637	0.0196	0.1637	0.0196	
Comp Mole Frac (CO2)	0.0373	0.1814	0.0373	0.1814	
Comp Mole Frac (Methanol)	0.0000	0.0000	0.0000	0.0000	
Comp Mole Frac (diM-Ether)	0.0000	0.0000	0.0000	0.0000	
Comp Mole Frac (1-Propanol)	0.0000	0.0000	0.0000	0.0000	

Unit Ops

Operation Name	Operation Type	Feeds	Products	Ignored	Calc Level
Temp Average ASR @TPL2	Spreadsheet			Yes	500.0 *
Electrolysis Spreadsheet @TF	Spreadsheet			No	500.0 *

Workbook: High Temperature Co-Electrolysis (TPL2) (continued)

Unit Ops (continued)

Operation Name	Operation Type	Feeds	Products	Ignored	Calc Level
Steam Electrolysis @TPL2	Spreadsheet			No	500.0 *
CO2 Electrolysis @TPL2	Spreadsheet			No	500.0 *
Sweep Gas/O2 Mixer @TPL2	Mixer	Anode @TPL2	O2 Out @TPL2	No	500.0 *
		Sweep Gas In @TPL2			
Isothermal Electrolysis @TPL2	Conversion Reactor	CO2, Water In @TPL2	Liquid @TPL2	No	500.0 *
		Electrolysis Heatiing @TPL2	Gas Products @TPL2		
			Electrolysis Heatiing @TPL2		
Electrodes @TPL2	Component Splitter	Gas Products @TPL2	Cathode @TPL2	No	500.0 *
			Anode @TPL2		
ERV-100 @TPL2	Equilibrium Reactor	Cathode @TPL2	2 @TPL2	No	500.0 *
		Shift Reactor 2 Heat @TPL2	H2,CO,H2O Out @TPL2		
			Shift Reactor 2 Heat @TPL2		
SET-1 @TPL2	Set			No	500.0 *
SET-3 @TPL2	Set			No	500.0 *
SET-2 @TPL2	Set			No	500.0 *
ADJ-1 @TPL2	Adjust			No	3500 *

Workbook: T-100 (COL1)

Material Streams

Fluid Pkg: All

Name		Reflux @COL1	To Condenser @COL1	Boilup @COL1	To Reboiler @COL1	MEOH-8 @COL1
Vapour Fraction		0.0000	1.0000	1.0000	0.0000	0.0000
Temperature	(C)	-27.54	54.58	78.98	78.53	78.98
Pressure	(kPa)	137.9	137.9	137.9	137.9	137.9
Molar Flow	(gmole/h)	4.639e-003	9.278e-003	9.871e-002	1.315	1.216
Mass Flow	(kg/d)	3.587e-003	4.442e-003	7.429e-002	0.9151	0.8408
Liquid Volume Flow	(m3/h)	1.883e-007	3.391e-007	3.868e-006	4.661e-005	4.274e-005
Heat Flow	(kW)	-3.153e-004	-3.163e-004	-5.512e-003	-8.984e-002	-8.332e-002
Name		LT-GAS-1 @COL1	MEOH-7 @COL1			
Vapour Fraction		1.0000	0.0042			
Temperature	(C)	-27.54	48.18			
Pressure	(kPa)	137.9	206.8			
Molar Flow	(gmole/h)	4.639e-003	1.221			
Mass Flow	(kg/d)	8.556e-004	0.8416			
Liquid Volume Flow	(m3/h)	1.508e-007	4.289e-005			
Heat Flow	(kW)	-6.123e-005	-8.433e-002			

Compositions

Fluid Pkg: All

Name	Reflux @COL1	To Condenser @COL1	Boilup @COL1	To Reboiler @COL1	MEOH-8 @COL1
Comp Mole Frac (H2O)	0.0000	0.0000	0.0490	0.2174	0.2310
Comp Mole Frac (Oxygen)	0.0000	0.0000	0.0000	0.0000	0.0000
Comp Mole Frac (Hydrogen)	0.0000	0.4320	0.0000	0.0000	0.0000
Comp Mole Frac (CO)	0.0000	0.0017	0.0000	0.0000	0.0000
Comp Mole Frac (CO2)	0.0028	0.0516	0.0000	0.0000	0.0000
Comp Mole Frac (Methanol)	0.9872	0.4955	0.9508	0.7825	0.7688
Comp Mole Frac (diM-Ether)	0.0101	0.0192	0.0000	0.0000	0.0000
Comp Mole Frac (1-Propanol)	0.0000	0.0000	0.0002	0.0002	0.0002

Workbook: T-100 (COL1) (continued)

Compositions (continued)

Fluid Pkg: All

Name	LT-GAS-1 @COL1	MEOH-7 @COL1			
Comp Mole Frac (H2O)	0.0000	0.2302			
Comp Mole Frac (Oxygen)	0.0000	0.0000			
Comp Mole Frac (Hydrogen)	0.8640	0.0033			
Comp Mole Frac (CO)	0.0034	0.0000			
Comp Mole Frac (CO2)	0.1005	0.0004			
Comp Mole Frac (Methanol)	0.0039	0.7659			
Comp Mole Frac (diM-Ether)	0.0283	0.0001			
Comp Mole Frac (1-Propanol)	0.0000	0.0002			

Energy Streams

Fluid Pkg: All

Name		CND1 Q @COL1	RB1 Q @COL1			
Heat Flow	(kW)	6.025e-005	1.013e-003			

Unit Ops

Operation Name	Operation Type	Feeds	Products	Ignored	Calc Level
Condenser @COL1	Partial Condenser	To Condenser @COL1 CND1 Q @COL1	LT-GAS-1 @COL1 Reflux @COL1 CND1 Q @COL1	No	500.0 *
Reboiler @COL1	Reboiler	To Reboiler @COL1 RB1 Q @COL1	MEOH-8 @COL1 Boilup @COL1	No	500.0 *
Main TS @COL1	Tray Section	Reflux @COL1 Boilup @COL1 MEOH-7 @COL1	To Reboiler @COL1 To Condenser @COL1	No	500.0 *

Workbook: T-101 (COL2)

Material Streams

Fluid Pkg: All

Name		Reflux @COL2	To Condenser @COL2	Boilup @COL2	To Reboiler @COL2	MEOH-9 @COL2
Vapour Fraction		0.0000	1.0000	1.0000	0.0000	0.0000
Temperature	(C)	40.00	72.51	108.4	108.2	40.00
Pressure	(kPa)	137.9	137.9	137.9	137.9	137.9
Molar Flow	(gmole/h)	1.216	2.138	2.018	2.313	0.9214
Mass Flow	(kg/d)	0.9354	1.644	0.9170	1.049	0.7087
Liquid Volume Flow	(m3/h)	4.898e-005	8.609e-005	3.936e-005	4.499e-005	3.711e-005
Heat Flow	(kW)	-8.059e-002	-0.1184	-0.1325	-0.1780	-6.105e-002
Name		WATER-2 @COL2	MEOH-8 @COL2			
Vapour Fraction		0.0000	0.0000			
Temperature	(C)	108.4	78.98			
Pressure	(kPa)	137.9	137.9			
Molar Flow	(gmole/h)	0.2948	1.216			
Mass Flow	(kg/d)	0.1321	0.8408			
Liquid Volume Flow	(m3/h)	5.630e-006	4.274e-005			
Heat Flow	(kW)	-2.275e-002	-8.332e-002			

Workbook: T-101 (COL2) (continued)

Compositions

Fluid Pkg: All

Name	Reflux @COL2	To Condenser @COL2	Boilup @COL2	To Reboiler @COL2	MEOH-9 @COL2
Comp Mole Frac (H2O)	0.0000	0.0000	0.9345	0.9369	0.0000
Comp Mole Frac (Oxygen)	0.0000	0.0000	0.0000	0.0000	0.0000
Comp Mole Frac (Hydrogen)	0.0000	0.0000	0.0000	0.0000	0.0000
Comp Mole Frac (CO)	0.0000	0.0000	0.0000	0.0000	0.0000
Comp Mole Frac (CO2)	0.0000	0.0000	0.0000	0.0000	0.0000
Comp Mole Frac (Methanol)	0.9998	0.9998	0.0655	0.0631	0.9998
Comp Mole Frac (diM-Ether)	0.0000	0.0000	0.0000	0.0000	0.0000
Comp Mole Frac (1-Propanol)	0.0002	0.0002	0.0000	0.0000	0.0002

Name	WATER-2 @COL2	MEOH-8 @COL2			
Comp Mole Frac (H2O)	0.9530	0.2310			
Comp Mole Frac (Oxygen)	0.0000	0.0000			
Comp Mole Frac (Hydrogen)	0.0000	0.0000			
Comp Mole Frac (CO)	0.0000	0.0000			
Comp Mole Frac (CO2)	0.0000	0.0000			
Comp Mole Frac (Methanol)	0.0470	0.7688			
Comp Mole Frac (diM-Ether)	0.0000	0.0000			
Comp Mole Frac (1-Propanol)	0.0000	0.0002			

Energy Streams

Fluid Pkg: All

Name		CND2 Q @COL2	RB2 Q @COL2			
Heat Flow	(kW)	2.329e-002	0.0228			

Unit Ops

Operation Name	Operation Type	Feeds	Products	Ignored	Calc Level
Reboiler @COL2	Reboiler	To Reboiler @COL2	WATER-2 @COL2	No	500.0 *
		RB2 Q @COL2	Boilup @COL2		
Main TS @COL2	Tray Section	Reflux @COL2	To Reboiler @COL2	No	500.0 *
		Boilup @COL2	To Condenser @COL2		
		MEOH-8 @COL2			
Condenser @COL2	Total Condenser	To Condenser @COL2	MEOH-9 @COL2	No	500.0 *
		CND2 Q @COL2	Reflux @COL2		
			CND2 Q @COL2		

Honeywell	Company Name Not Available Calgary, Alberta CANADA	Case Name: \\vmware-host\...\PSA Results\Coelec w syngas and PSA ratio 1.usc Unit Set: NASA Date/Time: Wednesday Feb 16 2011, 10:32:33

Workbook: Case (Main)

Streams

Fluid Pkg: All

Name		CO2, Water In	H2,CO,H2O Out	9	Sweep Gas In	Hot O2
Vapour Fraction		1.0000	1.0000	1.0000	1.0000	1.0000
Temperature	(C)	800.2	800.0	800.0 *	800.2	800.0
Pressure	(kPa)	137.9	135.1	137.9	135.1	135.1
Molar Flow	(gmole/h)	2.301	2.301	2.301	1.000e-010 *	0.5129
Mass Flow	(kg/d)	1.630	1.236	1.630	4.357e-011	0.3939
Std Ideal Liq Vol Flow	(m3/h)	8.159e-005	7.773e-005	8.156e-005	1.815e-015	1.443e-005
Heat Flow	(kW)	-0.1662	-9.409e-002	-0.1662	-5.842e-012	3.597e-003
Molar Enthalpy	(kJ/kgmole)	-2.600e+005	-1.472e+005	-2.600e+005	-2.103e+005	2.525e+004
Name		400	8	Warm O2	25	WATER-IN
Vapour Fraction		0.0000	0.5822	1.0000	1.0000	0.0000
Temperature	(C)	800.2	38.07	123.0	161.4	21.00 *
Pressure	(kPa)	137.9	137.9	135.1	135.1	137.9
Molar Flow	(gmole/h)	0.0000	2.301	0.5129	2.301	0.5521
Mass Flow	(kg/d)	0.0000	1.630	0.3939	1.236	0.2387 *
Std Ideal Liq Vol Flow	(m3/h)	0.0000	8.156e-005	1.443e-005	7.773e-005	9.966e-006
Heat Flow	(kW)	-0.0000	-0.1980	4.131e-004	-0.1091	-4.389e-002
Molar Enthalpy	(kJ/kgmole)	-2.600e+005	-3.099e+005	2899	-1.707e+005	-2.862e+005
Name		CO2-IN	4	5	6	7
Vapour Fraction		1.0000	1.0000	1.0000	1.0000 *	1.0000
Temperature	(C)	21.00 *	775.0 *	98.00 *	69.08	69.08
Pressure	(kPa)	137.9 *	137.9	137.9	135.1	135.1
Molar Flow	(gmole/h)	0.9468	2.301	2.301	0.4215	1.879
Mass Flow	(kg/d)	1.000 *	1.630	1.630	0.2264	1.009
Std Ideal Liq Vol Flow	(m3/h)	5.048e-005	8.156e-005	8.156e-005	1.424e-005	6.349e-005
Heat Flow	(kW)	-0.1036	-0.1669	-0.1851	-2.034e-002	-9.068e-002
Molar Enthalpy	(kJ/kgmole)	-3.940e+005	-2.611e+005	-2.896e+005	-1.737e+005	-1.737e+005
Name		10	SYNG	13	14	SYNG-RCY
Vapour Fraction		1.0000	1.0000	0.0000	0.0000	0.4963
Temperature	(C)	71.40	26.67 *	26.67	26.67	64.32
Pressure	(kPa)	137.9	135.1	135.1	137.9	137.9
Molar Flow	(gmole/h)	0.4215	1.499	0.3805	0.3805	0.8021
Mass Flow	(kg/d)	0.2264	0.8448	0.1646	0.1646	0.3910
Std Ideal Liq Vol Flow	(m3/h)	1.424e-005	5.662e-005	6.872e-006	6.872e-006	2.111e-005
Heat Flow	(kW)	-2.033e-002	-6.583e-002	-3.021e-002	-3.021e-002	-5.054e-002
Molar Enthalpy	(kJ/kgmole)	-1.736e+005	-1.581e+005	-2.858e+005	-2.858e+005	-2.268e+005
Name		O2-OUT	18	17	11	19
Vapour Fraction		1.0000	0.6294	0.5822	1.0000	1.0000
Temperature	(C)	136.0	55.78 *	38.07 *	69.08	176.7 *
Pressure	(kPa)	135.1	137.9	137.9 *	135.1	467.3
Molar Flow	(gmole/h)	0.5129	2.301	2.301 *	2.301	1.499
Mass Flow	(kg/d)	0.3939	1.630	1.630	1.236	0.8448
Std Ideal Liq Vol Flow	(m3/h)	1.443e-005	8.156e-005	8.156e-005	7.773e-005	5.662e-005
Heat Flow	(kW)	4.691e-004	-0.1962	-0.1980	-0.1110	-6.381e-002
Molar Enthalpy	(kJ/kgmole)	3293	-3.069e+005	-3.099e+005	-1.737e+005	-1.532e+005

Workbook: Case (Main) (continued)

Streams (continued)

Fluid Pkg: All

Name		20	WATER-OUT	CO2-OUT	Hydrogen	O2-IN-1
Vapour Fraction		1.0000	0.0000	1.0000	1.0000	1.0000
Temperature	(C)	54.44 *	26.67	26.67 *	99.72 *	26.67 *
Pressure	(kPa)	467.3	137.9	137.9	620.5	137.9 *
Molar Flow	(gmole/h)	1.499	0.5272	0.9717	0.4362	0.2949
Mass Flow	(kg/d)	0.8448	0.2282	1.011	2.121e-002	0.2265 *
Std Ideal Liq Vol Flow	(m3/h)	5.662e-005	9.530e-006	5.093e-005	1.259e-005	8.295e-006
Heat Flow	(kW)	-6.547e-002	-4.186e-002	-0.1052	2.526e-004	2.943e-006
Molar Enthalpy	(kJ/kgmole)	-1.573e+005	-2.858e+005	-3.898e+005	2085	35.92
Name		Purge gas	29	COMB-PROD-2	O2-IN-2	29-2
Vapour Fraction		1.0000	0.0000	1.0000	1.0000	0.0000
Temperature	(C)	99.72	1000	1000 *	26.67 *	1000
Pressure	(kPa)	172.4 *	137.9	137.9	137.9 *	137.9
Molar Flow	(gmole/h)	1.063	0.0000	1.063	0.2181	0.0000
Mass Flow	(kg/d)	0.8236	0.0000	1.050	0.1675 *	0.0000
Std Ideal Liq Vol Flow	(m3/h)	4.403e-005	0.0000	5.257e-005	6.135e-006	0.0000
Heat Flow	(kW)	-6.511e-002	-0.0000	-9.744e-002	2.176e-006	-0.0000
Molar Enthalpy	(kJ/kgmole)	-2.206e+005	-3.301e+005	-3.301e+005	35.92	-2.041e+005
Name		COMB-PROD-2-2	1	Electrolysis Power	Process Heat	Top Heat Q
Vapour Fraction		1.0000	1.0000	---	---	---
Temperature	(C)	1000 *	100.6	---	---	---
Pressure	(kPa)	137.9	689.5 *	---	---	---
Molar Flow	(gmole/h)	0.4362	1.499	---	---	---
Mass Flow	(kg/d)	0.1887	0.8448	---	---	---
Std Ideal Liq Vol Flow	(m3/h)	7.880e-006	5.662e-005	---	---	---
Heat Flow	(kW)	-2.473e-002	-6.486e-002	7.567e-002	2.234e-015	7.469e-004
Molar Enthalpy	(kJ/kgmole)	-2.041e+005	-1.558e+005	---	---	---
Name		Preheat Q	Circ Pwr	Amb Q	Water Pump Pwr	ST1 PWR
Vapour Fraction		---	---	---	---	---
Temperature	(C)	---	---	---	---	---
Pressure	(kPa)	---	---	---	---	---
Molar Flow	(gmole/h)	---	---	---	---	---
Mass Flow	(kg/d)	---	---	---	---	---
Std Ideal Liq Vol Flow	(m3/h)	---	---	---	---	---
Heat Flow	(kW)	1.108e-002	8.980e-006	-5.360e-003	6.962e-009	2.024e-003
Molar Enthalpy	(kJ/kgmole)	---	---	---	---	---
Name		IC1 Q	ST2 PWR	AMB-Q-1	PSA Power	PSA heat
Vapour Fraction		---	---	---	---	---
Temperature	(C)	---	---	---	---	---
Pressure	(kPa)	---	---	---	---	---
Molar Flow	(gmole/h)	---	---	---	---	---
Mass Flow	(kg/d)	---	---	---	---	---
Std Ideal Liq Vol Flow	(m3/h)	---	---	---	---	---
Heat Flow	(kW)	1.669e-003	6.169e-004	-2.491e-002	3.257e-006	5.806e-014
Molar Enthalpy	(kJ/kgmole)	---	---	---	---	---

Workbook: Case (Main) (continued)

Streams (continued)

Fluid Pkg: All

Name		COMB1-Q	COMB-Q-2-2			
Vapour Fraction		---	---			
Temperature	(C)	---	---			
Pressure	(kPa)	---	---			
Molar Flow	(gmole/h)	---	---			
Mass Flow	(kg/d)	---	---			
Std Ideal Liq Vol Flow	(m3/h)	---	---			
Heat Flow	(kW)	-3.234e-002	-2.499e-002			
Molar Enthalpy	(kJ/kgmole)	---	---			

Composition

Fluid Pkg: All

Name	CO2, Water In	H2,CO,H2O Out	9	Sweep Gas In	Hot O2
Master Comp Mole Frac (H2O)	0.4458	0.2233	0.4462	0.9900 *	0.0000
Master Comp Mole Frac (Oxygen)	0.0000	0.0000	0.0000	0.0100 *	1.0000
Master Comp Mole Frac (Hydrogen)	0.0504	0.2729	0.0500	0.0000 *	0.0000
Master Comp Mole Frac (CO)	0.0496	0.2729	0.0500	0.0000 *	0.0000
Master Comp Mole Frac (CO2)	0.4542	0.2309	0.4538	0.0000 *	0.0000
Master Comp Mole Frac (Methanol)	0.0000	0.0000	0.0000	0.0000 *	0.0000
Master Comp Mole Frac (diM-Ether)	0.0000	0.0000	0.0000	0.0000 *	0.0000
Master Comp Mole Frac (1-Propanol)	0.0000	0.0000	0.0000	0.0000 *	0.0000

Name	400	8	Warm O2	25	WATER-IN
Master Comp Mole Frac (H2O)	0.4458	0.4462	0.0000	0.2233	1.0000 *
Master Comp Mole Frac (Oxygen)	0.0000	0.0000	1.0000	0.0000	0.0000 *
Master Comp Mole Frac (Hydrogen)	0.0504	0.0500	0.0000	0.2729	0.0000 *
Master Comp Mole Frac (CO)	0.0496	0.0500	0.0000	0.2729	0.0000 *
Master Comp Mole Frac (CO2)	0.4542	0.4538	0.0000	0.2309	0.0000 *
Master Comp Mole Frac (Methanol)	0.0000	0.0000	0.0000	0.0000	0.0000 *
Master Comp Mole Frac (diM-Ether)	0.0000	0.0000	0.0000	0.0000	0.0000 *
Master Comp Mole Frac (1-Propanol)	0.0000	0.0000	0.0000	0.0000	0.0000 *

Name	CO2-IN	4	5	6	7
Master Comp Mole Frac (H2O)	0.0000 *	0.4462	0.4462	0.2233	0.2233
Master Comp Mole Frac (Oxygen)	0.0000 *	0.0000	0.0000	0.0000	0.0000
Master Comp Mole Frac (Hydrogen)	0.0000 *	0.0500	0.0500	0.2729	0.2729
Master Comp Mole Frac (CO)	0.0000 *	0.0500	0.0500	0.2729	0.2729
Master Comp Mole Frac (CO2)	1.0000 *	0.4538	0.4538	0.2309	0.2309
Master Comp Mole Frac (Methanol)	0.0000 *	0.0000	0.0000	0.0000	0.0000
Master Comp Mole Frac (diM-Ether)	0.0000 *	0.0000	0.0000	0.0000	0.0000
Master Comp Mole Frac (1-Propanol)	0.0000 *	0.0000	0.0000	0.0000	0.0000

Name	10	SYNG	13	14	SYNG-RCY
Master Comp Mole Frac (H2O)	0.2233	0.0261	0.9998	0.9998	0.5917
Master Comp Mole Frac (Oxygen)	0.0000	0.0000	0.0000	0.0000	0.0000
Master Comp Mole Frac (Hydrogen)	0.2729	0.3422	0.0000	0.0000	0.1435
Master Comp Mole Frac (CO)	0.2729	0.3422	0.0000	0.0000	0.1434
Master Comp Mole Frac (CO2)	0.2309	0.2895	0.0002	0.0002	0.1214
Master Comp Mole Frac (Methanol)	0.0000	0.0000	0.0000	0.0000	0.0000
Master Comp Mole Frac (diM-Ether)	0.0000	0.0000	0.0000	0.0000	0.0000
Master Comp Mole Frac (1-Propanol)	0.0000	0.0000	0.0000	0.0000	0.0000

Workbook: Case (Main) (continued)

Composition (continued)

Fluid Pkg: All

Name	O2-OUT	18	17	11	19
Master Comp Mole Frac (H2O)	0.0000	0.4462	0.4462 *	0.2233	0.0261
Master Comp Mole Frac (Oxygen)	1.0000	0.0000	0.0000 *	0.0000	0.0000
Master Comp Mole Frac (Hydrogen)	0.0000	0.0500	0.0500 *	0.2729	0.3422
Master Comp Mole Frac (CO)	0.0000	0.0500	0.0500 *	0.2729	0.3422
Master Comp Mole Frac (CO2)	0.0000	0.4538	0.4538 *	0.2309	0.2895
Master Comp Mole Frac (Methanol)	0.0000	0.0000	0.0000 *	0.0000	0.0000
Master Comp Mole Frac (diM-Ether)	0.0000	0.0000	0.0000 *	0.0000	0.0000
Master Comp Mole Frac (1-Propanol)	0.0000	0.0000	0.0000 *	0.0000	0.0000

Name	20	WATER-OUT	CO2-OUT	Hydrogen	O2-IN-1
Master Comp Mole Frac (H2O)	0.0261	0.9994	0.0259	0.0000	0.0000 *
Master Comp Mole Frac (Oxygen)	0.0000	0.0000	0.0001	0.0000	1.0000 *
Master Comp Mole Frac (Hydrogen)	0.3422	0.0000	0.0000	0.9996	0.0000 *
Master Comp Mole Frac (CO)	0.3422	0.0000	0.0000	0.0004	0.0000 *
Master Comp Mole Frac (CO2)	0.2895	0.0006	0.9740	0.0000	0.0000 *
Master Comp Mole Frac (Methanol)	0.0000	0.0000	0.0000	0.0000	0.0000 *
Master Comp Mole Frac (diM-Ether)	0.0000	0.0000	0.0000	0.0000	0.0000 *
Master Comp Mole Frac (1-Propanol)	0.0000	0.0000	0.0000	0.0000	0.0000 *

Name	Purge gas	29	COMB-PROD-2	O2-IN-2	29-2
Master Comp Mole Frac (H2O)	0.0368	0.1092	0.1092	0.0000 *	0.9995
Master Comp Mole Frac (Oxygen)	0.0000	0.0001	0.0001	1.0000 *	0.0001
Master Comp Mole Frac (Hydrogen)	0.0724	0.0000	0.0000	0.0000 *	0.0000
Master Comp Mole Frac (CO)	0.4825	0.0000	0.0000	0.0000 *	0.0000
Master Comp Mole Frac (CO2)	0.4083	0.8907	0.8907	0.0000 *	0.0004
Master Comp Mole Frac (Methanol)	0.0000	0.0000	0.0000	0.0000 *	0.0000
Master Comp Mole Frac (diM-Ether)	0.0000	0.0000	0.0000	0.0000 *	0.0000
Master Comp Mole Frac (1-Propanol)	0.0000	0.0000	0.0000	0.0000 *	0.0000

Name	COMB-PROD-2-2	1
Master Comp Mole Frac (H2O)	0.9995	0.0261
Master Comp Mole Frac (Oxygen)	0.0001	0.0000
Master Comp Mole Frac (Hydrogen)	0.0000	0.3422
Master Comp Mole Frac (CO)	0.0000	0.3422
Master Comp Mole Frac (CO2)	0.0004	0.2895
Master Comp Mole Frac (Methanol)	0.0000	0.0000
Master Comp Mole Frac (diM-Ether)	0.0000	0.0000
Master Comp Mole Frac (1-Propanol)	0.0000	0.0000

Unit Ops

Operation Name	Operation Type	Feeds	Products	Ignored	Calc Level
Syngas Circulator	Compressor	6	10	No	500.0 *
		Circ Pwr			
SG CMP STG1	Compressor	SYNG	19	No	500.0 *
		ST1 PWR			
SG CMP STG2	Compressor	20	1	No	500.0 *
		ST2 PWR			
M1	Mixer	WATER-IN	8	No	500.0 *
		CO2-IN			
		SYNG-RCY			
M2	Mixer	14	SYNG-RCY	No	500.0 *
		10			
Hi Temp Recup	LNG	H2,CO,H2O Out	25	No	500.0 *
		5	4		

Workbook: Case (Main) (continued)

Unit Ops (continued)

Operation Name	Operation Type	Feeds	Products	Ignored	Calc Level
Hi Temp Recup	LNG	Hot O2	Warm O2	No	500.0 *
Lo Temp Recup	LNG	25 17 Warm O2	11 18 O2-OUT	No	500.0 *
RWGS 1	Equilibrium Reactor	9	400 CO2, Water In	No	500.0 *
COMBUSTOR 1	Conversion Reactor	O2-IN-1 Purge gas COMB1-Q	29 COMB-PROD-2 COMB1-Q	No	500.0 *
COMBUSTOR 2	Conversion Reactor	O2-IN-2 Hydrogen COMB-Q-2-2	29-2 COMB-PROD-2-2 COMB-Q-2-2	No	500.0 *
Water Knockout Tank	Separator	7 Amb Q	13 SYNG Amb Q	No	500.0 *
KO-DRM 2	Separator	COMB-PROD-2 COMB-PROD-2-2 AMB-Q-1	WATER-OUT CO2-OUT AMB-Q-1	No	500.0 *
INT CLR 1	Cooler	19	20 IC1 Q	No	500.0 *
RCY-4	Recycle	8	17	No	3500 *
T1	Tee	11	6 7	No	500.0 *
High Temperature Co-Electrol	Standard Sub-Flowsheet	Sweep Gas In CO2, Water In Process Heat Electrolysis Power	Hot O2 H2,CO,H2O Out	No	2500 *
Topping Heat	Heater	4 Top Heat Q	9	No	500.0 *
Preheater	Heater	18 Preheat Q	5	No	500.0 *
SPRDSHT-1	Spreadsheet			No	500.0 *
PSA Calcs	Spreadsheet			No	500.0 *
Water Pump	Pump	13 Water Pump Pwr	14	No	500.0 *
PSA	Component Splitter	1 PSA Power PSA heat	Hydrogen Purge gas	No	500.0 *
SET-1	Set			No	500.0 *
ADJ-1	Adjust			No	3500 *

Honeywell	Company Name Not Available Calgary, Alberta CANADA	Case Name: \\vmware-host\...\PSA Results\Coelec w syngas and PSA ratio 1.usc Unit Set: NASA Date/Time: Wednesday Feb 16 2011, 10:32:33

Workbook: High Temperature Co-Electrolysis (TPL2)

Streams

Fluid Pkg: All

Name		Sweep Gas In @TPL2	O2 Out @TPL2	Gas Products @TPL2	Liquid @TPL2	Anode @TPL2
Vapour Fraction		1.0000	1.0000	1.0000	0.0000	1.0000
Temperature	(C)	800.2	800.0	800.0 *	800.0	800.0
Pressure	(kPa)	135.1	135.1	136.5	136.5	135.1
Molar Flow	(gmole/h)	1.000e-010	0.5129	2.814	0.0000	0.5129
Mass Flow	(kg/d)	4.357e-011	0.3939	1.630	0.0000	0.3939
Liquid Volume Flow	(m3/h)	1.815e-015	1.443e-005	1.071e-004	0.0000	1.443e-005
Heat Flow	(kW)	-5.842e-012	3.597e-003	-9.545e-002	-0.0000	3.597e-003
Molar Enthalpy	(kJ/kgmole)	-2.103e+005	2.525e+004	-1.221e+005	-1.221e+005	2.525e+004
Name		H2,CO,H2O Out @TP	Cathode @TPL2	2 @TPL2	CO2, Water In @TPL2	Electrolysis Heatiing @
Vapour Fraction		1.0000	1.0000	0.0000	1.0000	---
Temperature	(C)	800.0 *	800.0 *	800.0	800.2	---
Pressure	(kPa)	135.1	135.1	135.1	137.9	---
Molar Flow	(gmole/h)	2.301	2.301	0.0000	2.301	---
Mass Flow	(kg/d)	1.236	1.236	0.0000	1.630	---
Liquid Volume Flow	(m3/h)	7.773e-005	9.267e-005	0.0000	8.159e-005	---
Heat Flow	(kW)	-9.409e-002	-9.904e-002	-0.0000	-0.1662	7.071e-002
Molar Enthalpy	(kJ/kgmole)	-1.472e+005	-1.550e+005	-1.472e+005	-2.600e+005	---
Name		Process Heat @TPL2	Shift Reactor 2 Heat @	Electrolysis Power @T		
Vapour Fraction		---	---	---		
Temperature	(C)	---	---	---		
Pressure	(kPa)	---	---	---		
Molar Flow	(gmole/h)	---	---	---		
Mass Flow	(kg/d)	---	---	---		
Liquid Volume Flow	(m3/h)	---	---	---		
Heat Flow	(kW)	2.234e-015	4.957e-003	7.567e-002		
Molar Enthalpy	(kJ/kgmole)	---	---	---		

Composition

Fluid Pkg: All

Name	Sweep Gas In @TPL2	O2 Out @TPL2	Gas Products @TPL2	Liquid @TPL2	Anode @TPL2
Comp Mole Frac (H2O)	0.9900	0.0000	0.0000	0.0000	0.0000
Comp Mole Frac (Oxygen)	0.0100	1.0000	0.1823	0.1823	1.0000
Comp Mole Frac (Hydrogen)	0.0000	0.0000	0.4058	0.4057	0.0000
Comp Mole Frac (CO)	0.0000	0.0000	0.0406	0.0406	0.0000
Comp Mole Frac (CO2)	0.0000	0.0000	0.3714	0.3714	0.0000
Comp Mole Frac (Methanol)	0.0000	0.0000	0.0000	0.0000	0.0000
Comp Mole Frac (diM-Ether)	0.0000	0.0000	0.0000	0.0000	0.0000
Comp Mole Frac (1-Propanol)	0.0000	0.0000	0.0000	0.0000	0.0000
Name	H2,CO,H2O Out @TP	Cathode @TPL2	2 @TPL2	CO2, Water In @TPL2	
Comp Mole Frac (H2O)	0.2233	0.0000	0.2233	0.4458	
Comp Mole Frac (Oxygen)	0.0000	0.0000	0.0000	0.0000	
Comp Mole Frac (Hydrogen)	0.2729	0.4962	0.2729	0.0504	
Comp Mole Frac (CO)	0.2729	0.0496	0.2729	0.0496	
Comp Mole Frac (CO2)	0.2309	0.4542	0.2309	0.4542	
Comp Mole Frac (Methanol)	0.0000	0.0000	0.0000	0.0000	
Comp Mole Frac (diM-Ether)	0.0000	0.0000	0.0000	0.0000	
Comp Mole Frac (1-Propanol)	0.0000	0.0000	0.0000	0.0000	

Unit Ops

Operation Name	Operation Type	Feeds	Products	Ignored	Calc Level
Temp Average ASR @TPL2	Spreadsheet			Yes	500.0 *
Electrolysis Spreadsheet @TF	Spreadsheet			No	500.0 *

Workbook: High Temperature Co-Electrolysis (TPL2) (continued)

Unit Ops (continued)

Operation Name	Operation Type	Feeds	Products	Ignored	Calc Level
Steam Electrolysis @TPL2	Spreadsheet			No	500.0 *
CO2 Electrolysis @TPL2	Spreadsheet			No	500.0 *
Sweep Gas/O2 Mixer @TPL2	Mixer	Anode @TPL2	O2 Out @TPL2	No	500.0 *
		Sweep Gas In @TPL2			
Isothermal Electrolysis @TPL2	Conversion Reactor	CO2, Water In @TPL2	Liquid @TPL2	No	500.0 *
		Electrolysis Heatiing @TPL2	Gas Products @TPL2		
			Electrolysis Heatiing @TPL2		
Electrodes @TPL2	Component Splitter	Gas Products @TPL2	Cathode @TPL2	No	500.0 *
			Anode @TPL2		
ADJ-1 @TPL2	Adjust			Yes	3500 *
ADJ-2 @TPL2	Adjust			No	3500 *
ERV-100 @TPL2	Equilibrium Reactor	Cathode @TPL2	2 @TPL2	No	500.0 *
		Shift Reactor 2 Heat @TPL2	H2,CO,H2O Out @TPL2		
			Shift Reactor 2 Heat @TPL2		
SET-1 @TPL2	Set			No	500.0 *
SET-3 @TPL2	Set			No	500.0 *
SET-2 @TPL2	Set			No	500.0 *

Honeywell	Company Name Not Available Calgary, Alberta CANADA	Case Name: \\vmware-host\...\PSA Results\Coelec w syngas and PSA ratio 1_5.usc Unit Set: NASA Date/Time: Wednesday Feb 16 2011, 10:33:35

Workbook: Case (Main)

Streams

Fluid Pkg: All

Name		CO2, Water In	H2,CO,H2O Out	9	Sweep Gas In	Hot O2
Vapour Fraction		1.0000	1.0000	1.0000	1.0000	1.0000
Temperature	(C)	800.3	800.0	800.0 *	800.3	800.0
Pressure	(kPa)	137.9	135.1	137.9	135.1	135.1
Molar Flow	(gmole/h)	2.787	2.787	2.787	1.000e-010 *	0.7478
Mass Flow	(kg/d)	1.799	1.225	1.799	4.357e-011	0.5743
Std Ideal Liq Vol Flow	(m3/h)	8.974e-005	8.846e-005	8.970e-005	1.815e-015	2.103e-005
Heat Flow	(kW)	-0.1903	-8.667e-002	-0.1903	-5.842e-012	5.245e-003
Molar Enthalpy	(kJ/kgmole)	-2.458e+005	-1.119e+005	-2.458e+005	-2.103e+005	2.525e+004
Name		400	8	Warm O2	25	WATER-IN
Vapour Fraction		0.0000	0.4907	1.0000	1.0000	0.0000
Temperature	(C)	800.3	40.82	123.0	178.9	21.00 *
Pressure	(kPa)	137.9	137.9	135.1	135.1	137.9
Molar Flow	(gmole/h)	0.0000	2.787	0.7478	2.787	0.9467
Mass Flow	(kg/d)	0.0000	1.799	0.5743	1.225	0.4093 *
Std Ideal Liq Vol Flow	(m3/h)	0.0000	8.970e-005	2.103e-005	8.846e-005	1.709e-005
Heat Flow	(kW)	0.0000	-0.2313	6.023e-004	-0.1035	-7.526e-002
Molar Enthalpy	(kJ/kgmole)	-2.458e+005	-2.988e+005	2899	-1.337e+005	-2.862e+005
Name		CO2-IN	4	5	6	7
Vapour Fraction		1.0000	1.0000	1.0000	1.0000	1.0000
Temperature	(C)	21.00 *	775.0 *	98.00 *	178.0 *	178.0
Pressure	(kPa)	137.9 *	137.9	137.9	135.1	135.1
Molar Flow	(gmole/h)	0.9468	2.787	2.787	0.4379	2.349
Mass Flow	(kg/d)	1.000 *	1.799	1.799	0.1924	1.032
Std Ideal Liq Vol Flow	(m3/h)	5.048e-005	8.970e-005	8.970e-005	1.390e-005	7.456e-005
Heat Flow	(kW)	-0.1036	-0.1912	-0.2127	-1.627e-002	-8.728e-002
Molar Enthalpy	(kJ/kgmole)	-3.940e+005	-2.469e+005	-2.747e+005	-1.337e+005	-1.337e+005
Name		10	SYNG	13	14	SYNG-RCY
Vapour Fraction		1.0000	1.0000	0.0000	0.0000	0.4924
Temperature	(C)	181.1	26.67 *	26.67	26.67	69.12
Pressure	(kPa)	137.9	135.1	135.1	137.9	137.9
Molar Flow	(gmole/h)	0.4379	1.893	0.4560	0.4560	0.8939
Mass Flow	(kg/d)	0.1924	0.8350	0.1972	0.1972	0.3896
Std Ideal Liq Vol Flow	(m3/h)	1.390e-005	6.633e-005	8.234e-006	8.234e-006	2.213e-005
Heat Flow	(kW)	-1.625e-002	-5.979e-002	-3.620e-002	-3.620e-002	-5.245e-002
Molar Enthalpy	(kJ/kgmole)	-1.336e+005	-1.137e+005	-2.858e+005	-2.858e+005	-2.112e+005
Name		O2-OUT	18	17	11	19
Vapour Fraction		1.0000	0.4971	0.4907	1.0000	1.0000
Temperature	(C)	65.82	44.54	40.82 *	178.0	176.7 *
Pressure	(kPa)	135.1	137.9	137.9 *	135.1	445.3
Molar Flow	(gmole/h)	0.7478	2.787	2.787 *	2.787	1.893
Mass Flow	(kg/d)	0.5743	1.799	1.799	1.225	0.8350
Std Ideal Liq Vol Flow	(m3/h)	2.103e-005	8.970e-005	8.970e-005	8.846e-005	6.633e-005
Heat Flow	(kW)	2.470e-004	-0.2310	-0.2313	-0.1035	-5.733e-002
Molar Enthalpy	(kJ/kgmole)	1189	-2.983e+005	-2.988e+005	-1.337e+005	-1.090e+005

Workbook: Case (Main) (continued)

Streams (continued)

Fluid Pkg: All

Name		20	WATER-OUT	CO2-OUT	Hydrogen	O2-IN-1
Vapour Fraction		1.0000	0.0000	1.0000	1.0000	1.0000
Temperature	(C)	54.44 *	26.67	26.67 *	108.3 *	26.67 *
Pressure	(kPa)	445.3	137.9	137.9	620.5	137.9 *
Molar Flow	(gmole/h)	1.893	0.9221	0.9715	0.7629	0.3664
Mass Flow	(kg/d)	0.8350	0.3990	1.010	3.704e-002	0.2814 *
Std Ideal Liq Vol Flow	(m3/h)	6.633e-005	1.667e-005	5.091e-005	2.202e-005	1.031e-005
Heat Flow	(kW)	-5.935e-002	-7.321e-002	-0.1052	4.982e-004	3.656e-006
Molar Enthalpy	(kJ/kgmole)	-1.128e+005	-2.858e+005	-3.898e+005	2351	35.92
Name		Purge gas	29	COMB-PROD-2	O2-IN-2	29-2
Vapour Fraction		1.0000	0.0000	1.0000	1.0000	0.0000
Temperature	(C)	108.3	1000	1000 *	26.67 *	1000
Pressure	(kPa)	172.4 *	137.9	137.9	137.9 *	137.9
Molar Flow	(gmole/h)	1.131	0.0000	1.131	0.3815	0.0000
Mass Flow	(kg/d)	0.7980	0.0000	1.079	0.2930 *	0.0000
Std Ideal Liq Vol Flow	(m3/h)	4.431e-005	0.0000	5.380e-005	1.073e-005	0.0000
Heat Flow	(kW)	-5.896e-002	0.0000	-0.1013	3.807e-006	0.0000
Molar Enthalpy	(kJ/kgmole)	-1.877e+005	-3.225e+005	-3.225e+005	35.92	-2.041e+005
Name		COMB-PROD-2-2	1	Electrolysis Power	Process Heat	Top Heat Q
Vapour Fraction		1.0000	1.0000	---	---	---
Temperature	(C)	1000 *	108.8	---	---	---
Pressure	(kPa)	137.9	689.5 *	---	---	---
Molar Flow	(gmole/h)	0.7630	1.893	---	---	---
Mass Flow	(kg/d)	0.3300	0.8350	---	---	---
Std Ideal Liq Vol Flow	(m3/h)	1.378e-005	6.633e-005	---	---	---
Heat Flow	(kW)	-4.325e-002	-5.846e-002	0.1089	1.976e-014	8.818e-004
Molar Enthalpy	(kJ/kgmole)	-2.041e+005	-1.112e+005	---	---	---
Name		Preheat Q	Circ Pwr	Amb Q	Water Pump Pwr	ST1 PWR
Vapour Fraction		---	---	---	---	---
Temperature	(C)	---	---	---	---	---
Pressure	(kPa)	---	---	---	---	---
Molar Flow	(gmole/h)	---	---	---	---	---
Mass Flow	(kg/d)	---	---	---	---	---
Std Ideal Liq Vol Flow	(m3/h)	---	---	---	---	---
Heat Flow	(kW)	1.827e-002	1.232e-005	-8.706e-003	8.342e-009	2.458e-003
Molar Enthalpy	(kJ/kgmole)	---	---	---	---	---
Name		IC1 Q	ST2 PWR	AMB-Q-1	PSA Power	PSA heat
Vapour Fraction		---	---	---	---	---
Temperature	(C)	---	---	---	---	---
Pressure	(kPa)	---	---	---	---	---
Molar Flow	(gmole/h)	---	---	---	---	---
Mass Flow	(kg/d)	---	---	---	---	---
Std Ideal Liq Vol Flow	(m3/h)	---	---	---	---	---
Heat Flow	(kW)	2.020e-003	8.856e-004	-3.386e-002	4.115e-006	3.839e-013
Molar Enthalpy	(kJ/kgmole)	---	---	---	---	---

Workbook: Case (Main) (continued)

Streams (continued)

Fluid Pkg: All

Name		COMB1-Q	COMB-Q-2-2			
Vapour Fraction		---	---			
Temperature	(C)	---	---			
Pressure	(kPa)	---	---			
Molar Flow	(gmole/h)	---	---			
Mass Flow	(kg/d)	---	---			
Std Ideal Liq Vol Flow	(m3/h)	---	---			
Heat Flow	(kW)	-4.233e-002	-4.375e-002			
Molar Enthalpy	(kJ/kgmole)	---	---			

Composition

Fluid Pkg: All

Name	CO2, Water In	H2,CO,H2O Out	9	Sweep Gas In	Hot O2
Master Comp Mole Frac (H2O)	0.5366	0.2151	0.5370	0.9900 *	0.0000
Master Comp Mole Frac (Oxygen)	0.0000	0.0000	0.0000	0.0100 *	1.0000
Master Comp Mole Frac (Hydrogen)	0.0604	0.3819	0.0600	0.0000 *	0.0000
Master Comp Mole Frac (CO)	0.0396	0.2547	0.0400	0.0000 *	0.0000
Master Comp Mole Frac (CO2)	0.3634	0.1483	0.3630	0.0000 *	0.0000
Master Comp Mole Frac (Methanol)	0.0000	0.0000	0.0000	0.0000 *	0.0000
Master Comp Mole Frac (diM-Ether)	0.0000	0.0000	0.0000	0.0000 *	0.0000
Master Comp Mole Frac (1-Propanol)	0.0000	0.0000	0.0000	0.0000 *	0.0000

Name	400	8	Warm O2	25	WATER-IN
Master Comp Mole Frac (H2O)	0.5366	0.5370	0.0000	0.2151	1.0000 *
Master Comp Mole Frac (Oxygen)	0.0000	0.0000	1.0000	0.0000	0.0000 *
Master Comp Mole Frac (Hydrogen)	0.0604	0.0600	0.0000	0.3819	0.0000 *
Master Comp Mole Frac (CO)	0.0396	0.0400	0.0000	0.2547	0.0000 *
Master Comp Mole Frac (CO2)	0.3634	0.3630	0.0000	0.1483	0.0000 *
Master Comp Mole Frac (Methanol)	0.0000	0.0000	0.0000	0.0000	0.0000 *
Master Comp Mole Frac (diM-Ether)	0.0000	0.0000	0.0000	0.0000	0.0000 *
Master Comp Mole Frac (1-Propanol)	0.0000	0.0000	0.0000	0.0000	0.0000 *

Name	CO2-IN	4	5	6	7
Master Comp Mole Frac (H2O)	0.0000 *	0.5370	0.5370	0.2151	0.2151
Master Comp Mole Frac (Oxygen)	0.0000 *	0.0000	0.0000	0.0000	0.0000
Master Comp Mole Frac (Hydrogen)	0.0000 *	0.0600	0.0600	0.3819	0.3819
Master Comp Mole Frac (CO)	0.0000 *	0.0400	0.0400	0.2547	0.2547
Master Comp Mole Frac (CO2)	1.0000 *	0.3630	0.3630	0.1483	0.1483
Master Comp Mole Frac (Methanol)	0.0000 *	0.0000	0.0000	0.0000	0.0000
Master Comp Mole Frac (diM-Ether)	0.0000 *	0.0000	0.0000	0.0000	0.0000
Master Comp Mole Frac (1-Propanol)	0.0000 *	0.0000	0.0000	0.0000	0.0000

Name	10	SYNG	13	14	SYNG-RCY
Master Comp Mole Frac (H2O)	0.2151	0.0261	0.9998	0.9998	0.6154
Master Comp Mole Frac (Oxygen)	0.0000	0.0000	0.0000	0.0000	0.0000
Master Comp Mole Frac (Hydrogen)	0.3819	0.4739	0.0000	0.0000	0.1871
Master Comp Mole Frac (CO)	0.2547	0.3160	0.0000	0.0000	0.1248
Master Comp Mole Frac (CO2)	0.1483	0.1840	0.0001	0.0001	0.0727
Master Comp Mole Frac (Methanol)	0.0000	0.0000	0.0000	0.0000	0.0000
Master Comp Mole Frac (diM-Ether)	0.0000	0.0000	0.0000	0.0000	0.0000
Master Comp Mole Frac (1-Propanol)	0.0000	0.0000	0.0000	0.0000	0.0000

Workbook: Case (Main) (continued)

Composition (continued)

Fluid Pkg: All

Name	O2-OUT	18	17	11	19
Master Comp Mole Frac (H2O)	0.0000	0.5370	0.5370 *	0.2151	0.0261
Master Comp Mole Frac (Oxygen)	1.0000	0.0000	0.0000 *	0.0000	0.0000
Master Comp Mole Frac (Hydrogen)	0.0000	0.0600	0.0600 *	0.3819	0.4739
Master Comp Mole Frac (CO)	0.0000	0.0400	0.0400 *	0.2547	0.3160
Master Comp Mole Frac (CO2)	0.0000	0.3630	0.3630 *	0.1483	0.1840
Master Comp Mole Frac (Methanol)	0.0000	0.0000	0.0000 *	0.0000	0.0000
Master Comp Mole Frac (diM-Ether)	0.0000	0.0000	0.0000 *	0.0000	0.0000
Master Comp Mole Frac (1-Propanol)	0.0000	0.0000	0.0000 *	0.0000	0.0000

Name	20	WATER-OUT	CO2-OUT	Hydrogen	O2-IN-1
Master Comp Mole Frac (H2O)	0.0261	0.9994	0.0259	0.0000	0.0000 *
Master Comp Mole Frac (Oxygen)	0.0000	0.0000	0.0001	0.0000	1.0000 *
Master Comp Mole Frac (Hydrogen)	0.4739	0.0000	0.0000	0.9998	0.0000 *
Master Comp Mole Frac (CO)	0.3160	0.0000	0.0000	0.0002	0.0000 *
Master Comp Mole Frac (CO2)	0.1840	0.0006	0.9740	0.0000	0.0000 *
Master Comp Mole Frac (Methanol)	0.0000	0.0000	0.0000	0.0000	0.0000 *
Master Comp Mole Frac (diM-Ether)	0.0000	0.0000	0.0000	0.0000	0.0000 *
Master Comp Mole Frac (1-Propanol)	0.0000	0.0000	0.0000	0.0000	0.0000 *

Name	Purge gas	29	COMB-PROD-2	O2-IN-2	29-2
Master Comp Mole Frac (H2O)	0.0436	0.1627	0.1627	0.0000 *	0.9996
Master Comp Mole Frac (Oxygen)	0.0000	0.0000	0.0000	1.0000 *	0.0001
Master Comp Mole Frac (Hydrogen)	0.1191	0.0000	0.0000	0.0000 *	0.0000
Master Comp Mole Frac (CO)	0.5291	0.0000	0.0000	0.0000 *	0.0000
Master Comp Mole Frac (CO2)	0.3082	0.8373	0.8373	0.0000 *	0.0002
Master Comp Mole Frac (Methanol)	0.0000	0.0000	0.0000	0.0000 *	0.0000
Master Comp Mole Frac (diM-Ether)	0.0000	0.0000	0.0000	0.0000 *	0.0000
Master Comp Mole Frac (1-Propanol)	0.0000	0.0000	0.0000	0.0000 *	0.0000

Name	COMB-PROD-2-2	1
Master Comp Mole Frac (H2O)	0.9996	0.0261
Master Comp Mole Frac (Oxygen)	0.0001	0.0000
Master Comp Mole Frac (Hydrogen)	0.0000	0.4739
Master Comp Mole Frac (CO)	0.0000	0.3160
Master Comp Mole Frac (CO2)	0.0002	0.1840
Master Comp Mole Frac (Methanol)	0.0000	0.0000
Master Comp Mole Frac (diM-Ether)	0.0000	0.0000
Master Comp Mole Frac (1-Propanol)	0.0000	0.0000

Unit Ops

Operation Name	Operation Type	Feeds	Products	Ignored	Calc Level
Syngas Circulator	Compressor	6	10	No	500.0 *
		Circ Pwr			
SG CMP STG1	Compressor	SYNG	19	No	500.0 *
		ST1 PWR			
SG CMP STG2	Compressor	20	1	No	500.0 *
		ST2 PWR			
M1	Mixer	WATER-IN	8	No	500.0 *
		CO2-IN			
		SYNG-RCY			
M2	Mixer	14	SYNG-RCY	No	500.0 *
		10			
Hi Temp Recup	LNG	H2,CO,H2O Out	25	No	500.0 *
		5	4		

Workbook: Case (Main) (continued)

Unit Ops (continued)

Operation Name	Operation Type	Feeds	Products	Ignored	Calc Level
Hi Temp Recup	LNG	Hot O2	Warm O2	No	500.0 *
Lo Temp Recup	LNG	25 17 Warm O2	11 18 O2-OUT	No	500.0 *
RWGS 1	Equilibrium Reactor	9	400 CO2, Water In	No	500.0 *
COMBUSTOR 1	Conversion Reactor	O2-IN-1 Purge gas COMB1-Q	29 COMB-PROD-2 COMB1-Q	No	500.0 *
COMBUSTOR 2	Conversion Reactor	O2-IN-2 Hydrogen COMB-Q-2-2	29-2 COMB-PROD-2-2 COMB-Q-2-2	No	500.0 *
Water Knockout Tank	Separator	7 Amb Q	13 SYNG Amb Q	No	500.0 *
KO-DRM 2	Separator	COMB-PROD-2 COMB-PROD-2-2 AMB-Q-1	WATER-OUT CO2-OUT AMB-Q-1	No	500.0 *
INT CLR 1	Cooler	19	20 IC1 Q	No	500.0 *
RCY-4	Recycle	8	17	No	3500 *
T1	Tee	11	6 7	No	500.0 *
High Temperature Co-Electrol	Standard Sub-Flowsheet	Sweep Gas In CO2, Water In Process Heat Electrolysis Power	Hot O2 H2,CO,H2O Out	No	2500 *
Topping Heat	Heater	4 Top Heat Q	9	No	500.0 *
Preheater	Heater	18 Preheat Q	5	No	500.0 *
SPRDSHT-1	Spreadsheet			No	500.0 *
PSA Calcs	Spreadsheet			No	500.0 *
Water Pump	Pump	13 Water Pump Pwr	14	No	500.0 *
PSA	Component Splitter	1 PSA Power PSA heat	Hydrogen Purge gas	No	500.0 *
SET-1	Set			No	500.0 *
ADJ-1	Adjust			No	3500 *

Honeywell	Company Name Not Available Calgary, Alberta CANADA	Case Name: \\vmware-host\...\PSA Results\Coelec w syngas and PSA ratio 1_5.usc Unit Set: NASA Date/Time: Wednesday Feb 16 2011, 10:33:35

Workbook: High Temperature Co-Electrolysis (TPL2)

Streams

Fluid Pkg: All

Name		Sweep Gas In @TPL2	O2 Out @TPL2	Gas Products @TPL2	Liquid @TPL2	Anode @TPL2
Vapour Fraction		1.0000	1.0000	1.0000	0.0000	1.0000
Temperature	(C)	800.3	800.0	800.0 *	800.0	800.0
Pressure	(kPa)	135.1	135.1	136.5	136.5	135.1
Molar Flow	(gmole/h)	1.000e-010	0.7478	3.535	0.0000	0.7478
Mass Flow	(kg/d)	4.357e-011	0.5743	1.799	0.0000	0.5743
Liquid Volume Flow	(m3/h)	1.815e-015	2.103e-005	1.269e-004	0.0000	2.103e-005
Heat Flow	(kW)	-5.842e-012	5.245e-003	-8.721e-002	0.0000	5.245e-003
Molar Enthalpy	(kJ/kgmole)	-2.103e+005	2.525e+004	-8.881e+004	-8.882e+004	2.525e+004
Name		H2,CO,H2O Out @TP	Cathode @TPL2	2 @TPL2	CO2, Water In @TPL2	Electrolysis Heatiing @
Vapour Fraction		1.0000	1.0000	0.0000	1.0000	---
Temperature	(C)	800.0 *	800.0 *	800.0	800.3	---
Pressure	(kPa)	135.1	135.1	135.1	137.9	---
Molar Flow	(gmole/h)	2.787	2.787	0.0000	2.787	---
Mass Flow	(kg/d)	1.225	1.225	0.0000	1.799	---
Liquid Volume Flow	(m3/h)	8.846e-005	1.059e-004	0.0000	8.974e-005	---
Heat Flow	(kW)	-8.667e-002	-9.246e-002	0.0000	-0.1903	0.1031
Molar Enthalpy	(kJ/kgmole)	-1.119e+005	-1.194e+005	-1.119e+005	-2.458e+005	---
Name		Process Heat @TPL2	Shift Reactor 2 Heat @	Electrolysis Power @T		
Vapour Fraction		---	---	---		
Temperature	(C)	---	---	---		
Pressure	(kPa)	---	---	---		
Molar Flow	(gmole/h)	---	---	---		
Mass Flow	(kg/d)	---	---	---		
Liquid Volume Flow	(m3/h)	---	---	---		
Heat Flow	(kW)	1.976e-014	5.786e-003	0.1089		
Molar Enthalpy	(kJ/kgmole)	---	---	---		

Composition

Fluid Pkg: All

Name	Sweep Gas In @TPL2	O2 Out @TPL2	Gas Products @TPL2	Liquid @TPL2	Anode @TPL2
Comp Mole Frac (H2O)	0.9900	0.0000	0.0000	0.0000	0.0000
Comp Mole Frac (Oxygen)	0.0100	1.0000	0.2115	0.2115	1.0000
Comp Mole Frac (Hydrogen)	0.0000	0.0000	0.4707	0.4707	0.0000
Comp Mole Frac (CO)	0.0000	0.0000	0.0312	0.0312	0.0000
Comp Mole Frac (CO2)	0.0000	0.0000	0.2865	0.2865	0.0000
Comp Mole Frac (Methanol)	0.0000	0.0000	0.0000	0.0000	0.0000
Comp Mole Frac (diM-Ether)	0.0000	0.0000	0.0000	0.0000	0.0000
Comp Mole Frac (1-Propanol)	0.0000	0.0000	0.0000	0.0000	0.0000
Name	H2,CO,H2O Out @TP	Cathode @TPL2	2 @TPL2	CO2, Water In @TPL2	
Comp Mole Frac (H2O)	0.2151	0.0000	0.2151	0.5366	
Comp Mole Frac (Oxygen)	0.0000	0.0000	0.0000	0.0000	
Comp Mole Frac (Hydrogen)	0.3819	0.5970	0.3819	0.0604	
Comp Mole Frac (CO)	0.2547	0.0396	0.2547	0.0396	
Comp Mole Frac (CO2)	0.1483	0.3634	0.1483	0.3634	
Comp Mole Frac (Methanol)	0.0000	0.0000	0.0000	0.0000	
Comp Mole Frac (diM-Ether)	0.0000	0.0000	0.0000	0.0000	
Comp Mole Frac (1-Propanol)	0.0000	0.0000	0.0000	0.0000	

Unit Ops

Operation Name	Operation Type	Feeds	Products	Ignored	Calc Level
Temp Average ASR @TPL2	Spreadsheet			Yes	500.0 *
Electrolysis Spreadsheet @TF	Spreadsheet			No	500.0 *

Workbook: High Temperature Co-Electrolysis (TPL2) (continued)

Unit Ops (continued)

Operation Name	Operation Type	Feeds	Products	Ignored	Calc Level
Steam Electrolysis @TPL2	Spreadsheet			No	500.0 *
CO2 Electrolysis @TPL2	Spreadsheet			No	500.0 *
Sweep Gas/O2 Mixer @TPL2	Mixer	Anode @TPL2	O2 Out @TPL2	No	500.0 *
		Sweep Gas In @TPL2			
Isothermal Electrolysis @TPL2	Conversion Reactor	CO2, Water In @TPL2	Liquid @TPL2	No	500.0 *
		Electrolysis Heatiing @TPL2	Gas Products @TPL2		
			Electrolysis Heatiing @TPL2		
Electrodes @TPL2	Component Splitter	Gas Products @TPL2	Cathode @TPL2	No	500.0 *
			Anode @TPL2		
ADJ-1 @TPL2	Adjust			Yes	3500 *
ADJ-2 @TPL2	Adjust			No	3500 *
ERV-100 @TPL2	Equilibrium Reactor	Cathode @TPL2	2 @TPL2	No	500.0 *
		Shift Reactor 2 Heat @TPL2	H2,CO,H2O Out @TPL2		
			Shift Reactor 2 Heat @TPL2		
SET-1 @TPL2	Set			No	500.0 *
SET-3 @TPL2	Set			No	500.0 *
SET-2 @TPL2	Set			No	500.0 *

Honeywell	Company Name Not Available Calgary, Alberta CANADA	Case Name: \\vmware-host\...\PSA Results\Coelec w syngas and PSA ratio 2.usc Unit Set: NASA Date/Time: Wednesday Feb 16 2011, 10:36:09

Workbook: Case (Main)

Streams

Fluid Pkg: All

Name		CO2, Water In	H2,CO,H2O Out	9	Sweep Gas In	Hot O2
Vapour Fraction		1.0000	1.0000	1.0000	1.0000	1.0000
Temperature	(C)	800.3	800.0	800.0 *	800.3	800.0
Pressure	(kPa)	137.9	135.1	137.9	135.1	135.1
Molar Flow	(gmole/h)	3.293	3.293	3.293	1.000e-010 *	0.9834
Mass Flow	(kg/d)	1.987	1.232	1.987	4.357e-011	0.7552
Std Ideal Liq Vol Flow	(m3/h)	9.884e-005	1.010e-004	9.880e-005	1.815e-015	2.766e-005
Heat Flow	(kW)	-0.2162	-8.115e-002	-0.2162	-5.841e-012	6.897e-003
Molar Enthalpy	(kJ/kgmole)	-2.363e+005	-8.872e+004	-2.363e+005	-2.103e+005	2.525e+004
Name		400	8	Warm O2	25	WATER-IN
Vapour Fraction		0.0000	0.4212	1.0000	1.0000	0.0000
Temperature	(C)	800.3	36.65	122.9	193.1	21.00 *
Pressure	(kPa)	137.9	137.9	135.1	135.1	137.9
Molar Flow	(gmole/h)	0.0000	3.293	0.9834	3.293	1.372
Mass Flow	(kg/d)	0.0000	1.987	0.7552	1.232	0.5930 *
Std Ideal Liq Vol Flow	(m3/h)	0.0000	9.880e-005	2.766e-005	1.010e-004	2.476e-005
Heat Flow	(kW)	0.0000	-0.2672	7.912e-004	-0.1000	-0.1090
Molar Enthalpy	(kJ/kgmole)	-2.363e+005	-2.921e+005	2896	-1.094e+005	-2.862e+005
Name		CO2-IN	4	5	6	7
Vapour Fraction		1.0000	1.0000	1.0000	1.0000	1.0000
Temperature	(C)	21.00 *	775.0 *	98.00 *	120.0 *	120.0
Pressure	(kPa)	137.9 *	137.9	137.9	135.1	135.1
Molar Flow	(gmole/h)	0.9468	3.293	3.293	0.4722	2.821
Mass Flow	(kg/d)	1.000 *	1.987	1.987	0.1766	1.055
Std Ideal Liq Vol Flow	(m3/h)	5.048e-005	9.880e-005	9.880e-005	1.448e-005	8.650e-005
Heat Flow	(kW)	-0.1036	-0.2172	-0.2422	-1.465e-002	-8.750e-002
Molar Enthalpy	(kJ/kgmole)	-3.940e+005	-2.374e+005	-2.648e+005	-1.117e+005	-1.117e+005
Name		10	SYNG	13	14	SYNG-RCY
Vapour Fraction		1.0000	1.0000	0.0000	0.0000	0.4705
Temperature	(C)	122.8	26.67 *	26.67	26.67	64.16
Pressure	(kPa)	137.9	135.1	135.1	137.9	137.9
Molar Flow	(gmole/h)	0.4722	2.318	0.5026	0.5026	0.9748
Mass Flow	(kg/d)	0.1766	0.8378	0.2173	0.2173	0.3939
Std Ideal Liq Vol Flow	(m3/h)	1.448e-005	7.742e-005	9.074e-006	9.074e-006	2.355e-005
Heat Flow	(kW)	-1.464e-002	-5.601e-002	-3.989e-002	-3.989e-002	-5.453e-002
Molar Enthalpy	(kJ/kgmole)	-1.116e+005	-8.697e+004	-2.858e+005	-2.858e+005	-2.014e+005
Name		O2-OUT	18	17	11	19
Vapour Fraction		1.0000	0.4601	0.4212	1.0000	1.0000
Temperature	(C)	61.65	56.76	36.65 *	120.0	176.7 *
Pressure	(kPa)	135.1	137.9	137.9 *	135.1	433.3
Molar Flow	(gmole/h)	0.9834	3.293	3.293 *	3.293	2.318
Mass Flow	(kg/d)	0.7552	1.987	1.987	1.232	0.8378
Std Ideal Liq Vol Flow	(m3/h)	2.766e-005	9.880e-005	9.880e-005	1.010e-004	7.742e-005
Heat Flow	(kW)	2.911e-004	-0.2646	-0.2672	-0.1021	-5.307e-002
Molar Enthalpy	(kJ/kgmole)	1066	-2.892e+005	-2.921e+005	-1.117e+005	-8.241e+004

Workbook: Case (Main) (continued)

Streams (continued)

Fluid Pkg: All

Name		20	WATER-OUT	CO2-OUT	Hydrogen	O2-IN-1
Vapour Fraction		1.0000	0.0000	1.0000	1.0000	1.0000
Temperature	(C)	54.44 *	26.67	26.67 *	113.5 *	26.67 *
Pressure	(kPa)	433.3	137.9	137.9	620.5	137.9 *
Molar Flow	(gmole/h)	2.318	1.347	0.9713	1.115	0.4262
Mass Flow	(kg/d)	0.8378	0.5830	1.010	5.407e-002	0.3273 *
Std Ideal Liq Vol Flow	(m3/h)	7.742e-005	2.435e-005	5.090e-005	3.217e-005	1.199e-005
Heat Flow	(kW)	-5.548e-002	-0.1070	-0.1052	7.766e-004	4.252e-006
Molar Enthalpy	(kJ/kgmole)	-8.615e+004	-2.858e+005	-3.898e+005	2508	35.92
Name		Purge gas	29	COMB-PROD-2	O2-IN-2	29-2
Vapour Fraction		1.0000	0.0000	1.0000	1.0000	0.0000
Temperature	(C)	113.5	1000	1000 *	26.67 *	1000
Pressure	(kPa)	172.4 *	137.9	137.9	137.9 *	137.9
Molar Flow	(gmole/h)	1.204	0.0000	1.204	0.5574	0.0000
Mass Flow	(kg/d)	0.7837	0.0000	1.111	0.4281 *	0.0000
Std Ideal Liq Vol Flow	(m3/h)	4.525e-005	0.0000	5.512e-005	1.568e-005	0.0000
Heat Flow	(kW)	-5.509e-002	0.0000	-0.1054	5.562e-006	0.0000
Molar Enthalpy	(kJ/kgmole)	-1.648e+005	-3.153e+005	-3.153e+005	35.92	-2.041e+005
Name		COMB-PROD-2-2	1	Electrolysis Power	Process Heat	Top Heat Q
Vapour Fraction		1.0000	1.0000	---	---	---
Temperature	(C)	1000 *	113.8	---	---	---
Pressure	(kPa)	137.9	689.5 *	---	---	---
Molar Flow	(gmole/h)	1.115	2.318	---	---	---
Mass Flow	(kg/d)	0.4822	0.8378	---	---	---
Std Ideal Liq Vol Flow	(m3/h)	2.013e-005	7.742e-005	---	---	---
Heat Flow	(kW)	-6.320e-002	-5.432e-002	0.1419	3.303e-014	1.024e-003
Molar Enthalpy	(kJ/kgmole)	-2.041e+005	-8.435e+004	---	---	---
Name		Preheat Q	Circ Pwr	Amb Q	Water Pump Pwr	ST1 PWR
Vapour Fraction		---	---	---	---	---
Temperature	(C)	---	---	---	---	---
Pressure	(kPa)	---	---	---	---	---
Molar Flow	(gmole/h)	---	---	---	---	---
Mass Flow	(kg/d)	---	---	---	---	---
Std Ideal Liq Vol Flow	(m3/h)	---	---	---	---	---
Heat Flow	(kW)	2.238e-002	1.158e-005	-8.401e-003	9.193e-009	2.940e-003
Molar Enthalpy	(kJ/kgmole)	---	---	---	---	---
Name		IC1 Q	ST2 PWR	AMB-Q-1	PSA Power	PSA heat
Vapour Fraction		---	---	---	---	---
Temperature	(C)	---	---	---	---	---
Pressure	(kPa)	---	---	---	---	---
Molar Flow	(gmole/h)	---	---	---	---	---
Mass Flow	(kg/d)	---	---	---	---	---
Std Ideal Liq Vol Flow	(m3/h)	---	---	---	---	---
Heat Flow	(kW)	2.412e-003	1.159e-003	-4.351e-002	5.038e-006	-1.232e-013
Molar Enthalpy	(kJ/kgmole)	---	---	---	---	---

Workbook: Case (Main) (continued)

Streams (continued)

Fluid Pkg: All

Name		COMB1-Q	COMB-Q-2-2			
Vapour Fraction		---	---			
Temperature	(C)	---	---			
Pressure	(kPa)	---	---			
Molar Flow	(gmole/h)	---	---			
Mass Flow	(kg/d)	---	---			
Std Ideal Liq Vol Flow	(m3/h)	---	---			
Heat Flow	(kW)	-5.034e-002	-6.398e-002			
Molar Enthalpy	(kJ/kgmole)	---	---			

Composition

Fluid Pkg: All

Name	CO2, Water In	H2,CO,H2O Out	9	Sweep Gas In	Hot O2
Master Comp Mole Frac (H2O)	0.5973	0.1995	0.5977	0.9900 *	0.0000
Master Comp Mole Frac (Oxygen)	0.0000	0.0000	0.0000	0.0100 *	1.0000
Master Comp Mole Frac (Hydrogen)	0.0671	0.4648	0.0667	0.0000 *	0.0000
Master Comp Mole Frac (CO)	0.0329	0.2324	0.0333	0.0000 *	0.0000
Master Comp Mole Frac (CO2)	0.3027	0.1032	0.3023	0.0000 *	0.0000
Master Comp Mole Frac (Methanol)	0.0000	0.0000	0.0000	0.0000 *	0.0000
Master Comp Mole Frac (diM-Ether)	0.0000	0.0000	0.0000	0.0000 *	0.0000
Master Comp Mole Frac (1-Propanol)	0.0000	0.0000	0.0000	0.0000 *	0.0000

Name	400	8	Warm O2	25	WATER-IN
Master Comp Mole Frac (H2O)	0.5973	0.5977	0.0000	0.1995	1.0000 *
Master Comp Mole Frac (Oxygen)	0.0000	0.0000	1.0000	0.0000	0.0000 *
Master Comp Mole Frac (Hydrogen)	0.0671	0.0667	0.0000	0.4648	0.0000 *
Master Comp Mole Frac (CO)	0.0329	0.0333	0.0000	0.2324	0.0000 *
Master Comp Mole Frac (CO2)	0.3027	0.3023	0.0000	0.1032	0.0000 *
Master Comp Mole Frac (Methanol)	0.0000	0.0000	0.0000	0.0000	0.0000 *
Master Comp Mole Frac (diM-Ether)	0.0000	0.0000	0.0000	0.0000	0.0000 *
Master Comp Mole Frac (1-Propanol)	0.0000	0.0000	0.0000	0.0000	0.0000 *

Name	CO2-IN	4	5	6	7
Master Comp Mole Frac (H2O)	0.0000 *	0.5977	0.5977	0.1995	0.1995
Master Comp Mole Frac (Oxygen)	0.0000 *	0.0000	0.0000	0.0000	0.0000
Master Comp Mole Frac (Hydrogen)	0.0000 *	0.0667	0.0667	0.4648	0.4648
Master Comp Mole Frac (CO)	0.0000 *	0.0333	0.0333	0.2324	0.2324
Master Comp Mole Frac (CO2)	1.0000 *	0.3023	0.3023	0.1032	0.1032
Master Comp Mole Frac (Methanol)	0.0000 *	0.0000	0.0000	0.0000	0.0000
Master Comp Mole Frac (diM-Ether)	0.0000 *	0.0000	0.0000	0.0000	0.0000
Master Comp Mole Frac (1-Propanol)	0.0000 *	0.0000	0.0000	0.0000	0.0000

Name	10	SYNG	13	14	SYNG-RCY
Master Comp Mole Frac (H2O)	0.1995	0.0260	0.9999	0.9999	0.6122
Master Comp Mole Frac (Oxygen)	0.0000	0.0000	0.0000	0.0000	0.0000
Master Comp Mole Frac (Hydrogen)	0.4648	0.5656	0.0000	0.0000	0.2252
Master Comp Mole Frac (CO)	0.2324	0.2828	0.0000	0.0000	0.1126
Master Comp Mole Frac (CO2)	0.1032	0.1256	0.0001	0.0001	0.0500
Master Comp Mole Frac (Methanol)	0.0000	0.0000	0.0000	0.0000	0.0000
Master Comp Mole Frac (diM-Ether)	0.0000	0.0000	0.0000	0.0000	0.0000
Master Comp Mole Frac (1-Propanol)	0.0000	0.0000	0.0000	0.0000	0.0000

Workbook: Case (Main) (continued)

Composition (continued)

Fluid Pkg: All

Name	O2-OUT	18	17	11	19
Master Comp Mole Frac (H2O)	0.0000	0.5977	0.5977 *	0.1995	0.0260
Master Comp Mole Frac (Oxygen)	1.0000	0.0000	0.0000 *	0.0000	0.0000
Master Comp Mole Frac (Hydrogen)	0.0000	0.0667	0.0667 *	0.4648	0.5656
Master Comp Mole Frac (CO)	0.0000	0.0333	0.0333 *	0.2324	0.2828
Master Comp Mole Frac (CO2)	0.0000	0.3023	0.3023 *	0.1032	0.1256
Master Comp Mole Frac (Methanol)	0.0000	0.0000	0.0000 *	0.0000	0.0000
Master Comp Mole Frac (diM-Ether)	0.0000	0.0000	0.0000 *	0.0000	0.0000
Master Comp Mole Frac (1-Propanol)	0.0000	0.0000	0.0000 *	0.0000	0.0000

Name	20	WATER-OUT	CO2-OUT	Hydrogen	O2-IN-1
Master Comp Mole Frac (H2O)	0.0260	0.9994	0.0259	0.0000	0.0000 *
Master Comp Mole Frac (Oxygen)	0.0000	0.0000	0.0002	0.0000	1.0000 *
Master Comp Mole Frac (Hydrogen)	0.5656	0.0000	0.0000	0.9998	0.0000 *
Master Comp Mole Frac (CO)	0.2828	0.0000	0.0000	0.0002	0.0000 *
Master Comp Mole Frac (CO2)	0.1256	0.0006	0.9739	0.0000	0.0000 *
Master Comp Mole Frac (Methanol)	0.0000	0.0000	0.0000	0.0000	0.0000 *
Master Comp Mole Frac (diM-Ether)	0.0000	0.0000	0.0000	0.0000	0.0000 *
Master Comp Mole Frac (1-Propanol)	0.0000	0.0000	0.0000	0.0000	0.0000 *

Name	Purge gas	29	COMB-PROD-2	O2-IN-2	29-2
Master Comp Mole Frac (H2O)	0.0501	0.2135	0.2135	0.0000 *	0.9997
Master Comp Mole Frac (Oxygen)	0.0000	0.0001	0.0001	1.0000 *	0.0001
Master Comp Mole Frac (Hydrogen)	0.1634	0.0000	0.0000	0.0000 *	0.0000
Master Comp Mole Frac (CO)	0.5446	0.0000	0.0000	0.0000 *	0.0000
Master Comp Mole Frac (CO2)	0.2418	0.7864	0.7864	0.0000 *	0.0002
Master Comp Mole Frac (Methanol)	0.0000	0.0000	0.0000	0.0000 *	0.0000
Master Comp Mole Frac (diM-Ether)	0.0000	0.0000	0.0000	0.0000 *	0.0000
Master Comp Mole Frac (1-Propanol)	0.0000	0.0000	0.0000	0.0000 *	0.0000

Name	COMB-PROD-2-2	1
Master Comp Mole Frac (H2O)	0.9997	0.0260
Master Comp Mole Frac (Oxygen)	0.0001	0.0000
Master Comp Mole Frac (Hydrogen)	0.0000	0.5656
Master Comp Mole Frac (CO)	0.0000	0.2828
Master Comp Mole Frac (CO2)	0.0002	0.1256
Master Comp Mole Frac (Methanol)	0.0000	0.0000
Master Comp Mole Frac (diM-Ether)	0.0000	0.0000
Master Comp Mole Frac (1-Propanol)	0.0000	0.0000

Unit Ops

Operation Name	Operation Type	Feeds	Products	Ignored	Calc Level
Syngas Circulator	Compressor	6	10	No	500.0 *
		Circ Pwr			
SG CMP STG1	Compressor	SYNG	19	No	500.0 *
		ST1 PWR			
SG CMP STG2	Compressor	20	1	No	500.0 *
		ST2 PWR			
M1	Mixer	WATER-IN	8	No	500.0 *
		CO2-IN			
		SYNG-RCY			
M2	Mixer	14	SYNG-RCY	No	500.0 *
		10			
Hi Temp Recup	LNG	H2,CO,H2O Out	25	No	500.0 *
		5	4		

Workbook: Case (Main) (continued)

Unit Ops (continued)

Operation Name	Operation Type	Feeds	Products	Ignored	Calc Level
Hi Temp Recup	LNG	Hot O2	Warm O2	No	500.0 *
Lo Temp Recup	LNG	25 17 Warm O2	11 18 O2-OUT	No	500.0 *
RWGS 1	Equilibrium Reactor	9	400 CO2, Water In	No	500.0 *
COMBUSTOR 1	Conversion Reactor	O2-IN-1 Purge gas COMB1-Q	29 COMB-PROD-2 COMB1-Q	No	500.0 *
COMBUSTOR 2	Conversion Reactor	O2-IN-2 Hydrogen COMB-Q-2-2	29-2 COMB-PROD-2-2 COMB-Q-2-2	No	500.0 *
Water Knockout Tank	Separator	7 Amb Q	13 SYNG Amb Q	No	500.0 *
KO-DRM 2	Separator	COMB-PROD-2 COMB-PROD-2-2 AMB-Q-1	WATER-OUT CO2-OUT AMB-Q-1	No	500.0 *
INT CLR 1	Cooler	19	20 IC1 Q	No	500.0 *
RCY-4	Recycle	8	17	No	3500 *
T1	Tee	11	6 7	No	500.0 *
High Temperature Co-Electrol	Standard Sub-Flowsheet	Sweep Gas In CO2, Water In Process Heat Electrolysis Power	Hot O2 H2,CO,H2O Out	No	2500 *
Topping Heat	Heater	4 Top Heat Q	9	No	500.0 *
Preheater	Heater	18 Preheat Q	5	No	500.0 *
SPRDSHT-1	Spreadsheet			No	500.0 *
PSA Calcs	Spreadsheet			No	500.0 *
Water Pump	Pump	13 Water Pump Pwr	14	No	500.0 *
PSA	Component Splitter	1 PSA Power PSA heat	Hydrogen Purge gas	No	500.0 *
SET-1	Set			No	500.0 *
ADJ-1	Adjust			No	3500 *

Honeywell	Company Name Not Available Calgary, Alberta CANADA	Case Name: \\vmware-host\...\PSA Results\Coelec w syngas and PSA ratio 2.usc Unit Set: NASA Date/Time: Wednesday Feb 16 2011, 10:36:09

Workbook: High Temperature Co-Electrolysis (TPL2)

Streams

Fluid Pkg: All

Name		Sweep Gas In @TPL2	O2 Out @TPL2	Gas Products @TPL2	Liquid @TPL2	Anode @TPL2
Vapour Fraction		1.0000	1.0000	1.0000	0.0000	1.0000
Temperature	(C)	800.3	800.0	800.0 *	800.0	800.0
Pressure	(kPa)	135.1	135.1	136.5	136.5	135.1
Molar Flow	(gmole/h)	1.000e-010	0.9834	4.276	0.0000	0.9834
Mass Flow	(kg/d)	4.357e-011	0.7552	1.987	0.0000	0.7552
Liquid Volume Flow	(m3/h)	1.815e-015	2.766e-005	1.478e-004	0.0000	2.766e-005
Heat Flow	(kW)	-5.841e-012	6.897e-003	-8.060e-002	0.0000	6.897e-003
Molar Enthalpy	(kJ/kgmole)	-2.103e+005	2.525e+004	-6.785e+004	-6.785e+004	2.525e+004
Name		H2,CO,H2O Out @TP	Cathode @TPL2	2 @TPL2	CO2, Water In @TPL2	Electrolysis Heatiing @
Vapour Fraction		1.0000	1.0000	0.0000	1.0000	---
Temperature	(C)	800.0 *	800.0 *	800.0	800.3	---
Pressure	(kPa)	135.1	135.1	135.1	137.9	---
Molar Flow	(gmole/h)	3.293	3.293	0.0000	3.293	---
Mass Flow	(kg/d)	1.232	1.232	0.0000	1.987	---
Liquid Volume Flow	(m3/h)	1.010e-004	1.201e-004	0.0000	9.884e-005	---
Heat Flow	(kW)	-8.115e-002	-8.750e-002	0.0000	-0.2162	0.1356
Molar Enthalpy	(kJ/kgmole)	-8.872e+004	-9.565e+004	-8.872e+004	-2.363e+005	---
Name		Process Heat @TPL2	Shift Reactor 2 Heat @	Electrolysis Power @T		
Vapour Fraction		---	---	---		
Temperature	(C)	---	---	---		
Pressure	(kPa)	---	---	---		
Molar Flow	(gmole/h)	---	---	---		
Mass Flow	(kg/d)	---	---	---		
Liquid Volume Flow	(m3/h)	---	---	---		
Heat Flow	(kW)	3.303e-014	6.342e-003	0.1419		
Molar Enthalpy	(kJ/kgmole)	---	---	---		

Composition

Fluid Pkg: All

Name	Sweep Gas In @TPL2	O2 Out @TPL2	Gas Products @TPL2	Liquid @TPL2	Anode @TPL2
Comp Mole Frac (H2O)	0.9900	0.0000	0.0000	0.0000	0.0000
Comp Mole Frac (Oxygen)	0.0100	1.0000	0.2300	0.2300	1.0000
Comp Mole Frac (Hydrogen)	0.0000	0.0000	0.5116	0.5116	0.0000
Comp Mole Frac (CO)	0.0000	0.0000	0.0253	0.0253	0.0000
Comp Mole Frac (CO2)	0.0000	0.0000	0.2331	0.2331	0.0000
Comp Mole Frac (Methanol)	0.0000	0.0000	0.0000	0.0000	0.0000
Comp Mole Frac (diM-Ether)	0.0000	0.0000	0.0000	0.0000	0.0000
Comp Mole Frac (1-Propanol)	0.0000	0.0000	0.0000	0.0000	0.0000
Name	H2,CO,H2O Out @TP	Cathode @TPL2	2 @TPL2	CO2, Water In @TPL2	
Comp Mole Frac (H2O)	0.1995	0.0000	0.1995	0.5973	
Comp Mole Frac (Oxygen)	0.0000	0.0000	0.0000	0.0000	
Comp Mole Frac (Hydrogen)	0.4648	0.6644	0.4648	0.0671	
Comp Mole Frac (CO)	0.2324	0.0329	0.2324	0.0329	
Comp Mole Frac (CO2)	0.1032	0.3027	0.1032	0.3027	
Comp Mole Frac (Methanol)	0.0000	0.0000	0.0000	0.0000	
Comp Mole Frac (diM-Ether)	0.0000	0.0000	0.0000	0.0000	
Comp Mole Frac (1-Propanol)	0.0000	0.0000	0.0000	0.0000	

Unit Ops

Operation Name	Operation Type	Feeds	Products	Ignored	Calc Level
Temp Average ASR @TPL2	Spreadsheet			Yes	500.0 *
Electrolysis Spreadsheet @TF	Spreadsheet			No	500.0 *

Workbook: High Temperature Co-Electrolysis (TPL2) (continued)

Unit Ops (continued)

Operation Name	Operation Type	Feeds	Products	Ignored	Calc Level
Steam Electrolysis @TPL2	Spreadsheet			No	500.0 *
CO2 Electrolysis @TPL2	Spreadsheet			No	500.0 *
Sweep Gas/O2 Mixer @TPL2	Mixer	Anode @TPL2	O2 Out @TPL2	No	500.0 *
		Sweep Gas In @TPL2			
Isothermal Electrolysis @TPL2	Conversion Reactor	CO2, Water In @TPL2	Liquid @TPL2	No	500.0 *
		Electrolysis Heatiing @TPL2	Gas Products @TPL2		
			Electrolysis Heatiing @TPL2		
Electrodes @TPL2	Component Splitter	Gas Products @TPL2	Cathode @TPL2	No	500.0 *
			Anode @TPL2		
ADJ-2 @TPL2	Adjust			No	3500 *
ERV-100 @TPL2	Equilibrium Reactor	Cathode @TPL2	2 @TPL2	No	500.0 *
		Shift Reactor 2 Heat @TPL2	H2,CO,H2O Out @TPL2		
			Shift Reactor 2 Heat @TPL2		
SET-1 @TPL2	Set			No	500.0 *
SET-3 @TPL2	Set			No	500.0 *
SET-2 @TPL2	Set			No	500.0 *

Honeywell	Company Name Not Available Calgary, Alberta CANADA	Case Name: \\vmware-host\...\PSA Results\Coelec w syngas and PSA ratio 2_5.usc Unit Set: NASA Date/Time: Wednesday Feb 16 2011, 10:37:43

Workbook: Case (Main)

Streams

Fluid Pkg: All

Name		CO2, Water In	H2,CO,H2O Out	9	Sweep Gas In	Hot O2
Vapour Fraction		1.0000	1.0000	1.0000	1.0000	1.0000
Temperature	(C)	800.3	800.0	800.0 *	800.3	800.0
Pressure	(kPa)	137.9	135.1	137.9	135.1	135.1
Molar Flow	(gmole/h)	3.807	3.807	3.807	1.000e-010 *	1.220
Mass Flow	(kg/d)	2.183	1.246	2.183	4.357e-011	0.9366
Std Ideal Liq Vol Flow	(m3/h)	1.083e-004	1.144e-004	1.083e-004	1.815e-015	3.430e-005
Heat Flow	(kW)	-0.2428	-7.644e-002	-0.2428	-5.841e-012	8.554e-003
Molar Enthalpy	(kJ/kgmole)	-2.296e+005	-7.228e+004	-2.296e+005	-2.103e+005	2.525e+004
Name		400	8	Warm O2	25	WATER-IN
Vapour Fraction		0.0000	0.3744	1.0000	1.0000	0.0000
Temperature	(C)	800.3	35.29	347.7	121.0	21.00 *
Pressure	(kPa)	137.9	137.9	135.1	135.1	137.9
Molar Flow	(gmole/h)	0.0000	3.807	1.220	3.807	1.814
Mass Flow	(kg/d)	0.0000	2.183	0.9366	1.246	0.7844 *
Std Ideal Liq Vol Flow	(m3/h)	0.0000	1.083e-004	3.430e-005	1.144e-004	3.275e-005
Heat Flow	(kW)	0.0000	-0.3036	3.360e-003	-0.1002	-0.1442
Molar Enthalpy	(kJ/kgmole)	-2.296e+005	-2.871e+005	9917	-9.472e+004	-2.862e+005
Name		CO2-IN	4	5	6	7
Vapour Fraction		1.0000	1.0000	0.9933	1.0000	1.0000
Temperature	(C)	21.00 *	775.0 *	96.00 *	121.0 *	121.0
Pressure	(kPa)	137.9 *	137.9	137.9	135.1	135.1
Molar Flow	(gmole/h)	0.9468	3.807	3.807	0.5140	3.293
Mass Flow	(kg/d)	1.000 *	2.183	2.183	0.1682	1.078
Std Ideal Liq Vol Flow	(m3/h)	5.048e-005	1.083e-004	1.083e-004	1.544e-005	9.893e-005
Heat Flow	(kW)	-0.1036	-0.2439	-0.2729	-1.352e-002	-8.666e-002
Molar Enthalpy	(kJ/kgmole)	-3.940e+005	-2.307e+005	-2.580e+005	-9.472e+004	-9.472e+004
Name		10	SYNG	13	14	SYNG-RCY
Vapour Fraction		1.0000	1.0000	0.0000	0.0000	0.4800
Temperature	(C)	123.9	26.67 *	26.67	26.67	62.68
Pressure	(kPa)	137.9	135.1	135.1	137.9	137.9
Molar Flow	(gmole/h)	0.5140	2.761	0.5324	0.5324	1.046
Mass Flow	(kg/d)	0.1682	0.8478	0.2302	0.2302	0.3984
Std Ideal Liq Vol Flow	(m3/h)	1.544e-005	8.932e-005	9.612e-006	9.612e-006	2.505e-005
Heat Flow	(kW)	-1.351e-002	-5.353e-002	-4.226e-002	-4.226e-002	-5.577e-002
Molar Enthalpy	(kJ/kgmole)	-9.463e+004	-6.980e+004	-2.858e+005	-2.858e+005	-1.919e+005
Name		O2-OUT	18	17	11	19
Vapour Fraction		1.0000	0.4105	0.3744	1.0000	1.0000
Temperature	(C)	60.29	56.79	35.29 *	121.0	176.7 *
Pressure	(kPa)	135.1	137.9	137.9 *	135.1	426.1
Molar Flow	(gmole/h)	1.220	3.807	3.807 *	3.807	2.761
Mass Flow	(kg/d)	0.9366	2.183	2.183	1.246	0.8478
Std Ideal Liq Vol Flow	(m3/h)	3.430e-005	1.083e-004	1.083e-004	1.144e-004	8.932e-005
Heat Flow	(kW)	3.473e-004	-0.3006	-0.3036	-0.1002	-5.008e-002
Molar Enthalpy	(kJ/kgmole)	1025	-2.842e+005	-2.871e+005	-9.472e+004	-6.530e+004

Workbook: Case (Main) (continued)

Streams (continued)

Fluid Pkg: All

Name		20	WATER-OUT	CO2-OUT	Hydrogen	O2-IN-1
Vapour Fraction		1.0000	0.0000	1.0000	1.0000	1.0000
Temperature	(C)	54.44 *	26.67	26.67 *	116.8 *	26.67 *
Pressure	(kPa)	426.1	137.9	137.9	620.5	137.9 *
Molar Flow	(gmole/h)	2.761	1.790	0.9709	1.481	0.4790
Mass Flow	(kg/d)	0.8478	0.7747	1.010	7.181e-002	0.3679 *
Std Ideal Liq Vol Flow	(m3/h)	8.932e-005	3.236e-005	5.088e-005	4.275e-005	1.347e-005
Heat Flow	(kW)	-5.291e-002	-0.1421	-0.1051	1.073e-003	4.780e-006
Molar Enthalpy	(kJ/kgmole)	-6.899e+004	-2.858e+005	-3.898e+005	2608	35.92
Name		Purge gas	29	COMB-PROD-2	O2-IN-2	29-2
Vapour Fraction		1.0000	0.0000	1.0000	1.0000	0.0000
Temperature	(C)	116.8	1000	1000 *	26.67 *	1000
Pressure	(kPa)	172.4 *	137.9	137.9	137.9 *	137.9
Molar Flow	(gmole/h)	1.280	0.0000	1.280	0.7406	0.0000
Mass Flow	(kg/d)	0.7760	0.0000	1.144	0.5688 *	0.0000
Std Ideal Liq Vol Flow	(m3/h)	4.657e-005	0.0000	5.649e-005	2.083e-005	0.0000
Heat Flow	(kW)	-5.254e-002	0.0000	-0.1097	7.390e-006	0.0000
Molar Enthalpy	(kJ/kgmole)	-1.478e+005	-3.087e+005	-3.087e+005	35.92	-2.041e+005
Name		COMB-PROD-2-2	1	Electrolysis Power	Process Heat	Top Heat Q
Vapour Fraction		1.0000	1.0000	---	---	---
Temperature	(C)	1000 *	117.0	---	---	---
Pressure	(kPa)	137.9	689.5 *	---	---	---
Molar Flow	(gmole/h)	1.481	2.761	---	---	---
Mass Flow	(kg/d)	0.6406	0.8478	---	---	---
Std Ideal Liq Vol Flow	(m3/h)	2.675e-005	8.932e-005	---	---	---
Heat Flow	(kW)	-8.398e-002	-5.147e-002	0.1749	-6.856e-015	1.169e-003
Molar Enthalpy	(kJ/kgmole)	-2.041e+005	-6.711e+004	---	---	---
Name		Preheat Q	Circ Pwr	Amb Q	Water Pump Pwr	ST1 PWR
Vapour Fraction		---	---	---	---	---
Temperature	(C)	---	---	---	---	---
Pressure	(kPa)	---	---	---	---	---
Molar Flow	(gmole/h)	---	---	---	---	---
Mass Flow	(kg/d)	---	---	---	---	---
Std Ideal Liq Vol Flow	(m3/h)	---	---	---	---	---
Heat Flow	(kW)	2.774e-002	1.264e-005	-9.138e-003	9.739e-009	3.452e-003
Molar Enthalpy	(kJ/kgmole)	---	---	---	---	---
Name		IC1 Q	ST2 PWR	AMB-Q-1	PSA Power	PSA heat
Vapour Fraction		---	---	---	---	---
Temperature	(C)	---	---	---	---	---
Pressure	(kPa)	---	---	---	---	---
Molar Flow	(gmole/h)	---	---	---	---	---
Mass Flow	(kg/d)	---	---	---	---	---
Std Ideal Liq Vol Flow	(m3/h)	---	---	---	---	---
Heat Flow	(kW)	2.828e-003	1.435e-003	-5.355e-002	6.000e-006	6.391e-013
Molar Enthalpy	(kJ/kgmole)	---	---	---	---	---

Workbook: Case (Main) (continued)

Streams (continued)

Fluid Pkg: All

Name		COMB1-Q	COMB-Q-2-2			
Vapour Fraction		---	---			
Temperature	(C)	---	---			
Pressure	(kPa)	---	---			
Molar Flow	(gmole/h)	---	---			
Mass Flow	(kg/d)	---	---			
Std Ideal Liq Vol Flow	(m3/h)	---	---			
Heat Flow	(kW)	-5.721e-002	-8.506e-002			
Molar Enthalpy	(kJ/kgmole)	---	---			

Composition

Fluid Pkg: All

Name	CO2, Water In	H2,CO,H2O Out	9	Sweep Gas In	Hot O2
Master Comp Mole Frac (H2O)	0.6407	0.1834	0.6411	0.9900 *	0.0000
Master Comp Mole Frac (Oxygen)	0.0000	0.0000	0.0000	0.0100 *	1.0000
Master Comp Mole Frac (Hydrogen)	0.0718	0.5291	0.0714	0.0000 *	0.0000
Master Comp Mole Frac (CO)	0.0282	0.2116	0.0286	0.0000 *	0.0000
Master Comp Mole Frac (CO2)	0.2593	0.0759	0.2589	0.0000 *	0.0000
Master Comp Mole Frac (Methanol)	0.0000	0.0000	0.0000	0.0000 *	0.0000
Master Comp Mole Frac (diM-Ether)	0.0000	0.0000	0.0000	0.0000 *	0.0000
Master Comp Mole Frac (1-Propanol)	0.0000	0.0000	0.0000	0.0000 *	0.0000

Name	400	8	Warm O2	25	WATER-IN
Master Comp Mole Frac (H2O)	0.6407	0.6411	0.0000	0.1834	1.0000 *
Master Comp Mole Frac (Oxygen)	0.0000	0.0000	1.0000	0.0000	0.0000 *
Master Comp Mole Frac (Hydrogen)	0.0718	0.0714	0.0000	0.5291	0.0000 *
Master Comp Mole Frac (CO)	0.0282	0.0286	0.0000	0.2116	0.0000 *
Master Comp Mole Frac (CO2)	0.2593	0.2589	0.0000	0.0759	0.0000 *
Master Comp Mole Frac (Methanol)	0.0000	0.0000	0.0000	0.0000	0.0000 *
Master Comp Mole Frac (diM-Ether)	0.0000	0.0000	0.0000	0.0000	0.0000 *
Master Comp Mole Frac (1-Propanol)	0.0000	0.0000	0.0000	0.0000	0.0000 *

Name	CO2-IN	4	5	6	7
Master Comp Mole Frac (H2O)	0.0000 *	0.6411	0.6411	0.1834	0.1834
Master Comp Mole Frac (Oxygen)	0.0000 *	0.0000	0.0000	0.0000	0.0000
Master Comp Mole Frac (Hydrogen)	0.0000 *	0.0714	0.0714	0.5291	0.5291
Master Comp Mole Frac (CO)	0.0000 *	0.0286	0.0286	0.2116	0.2116
Master Comp Mole Frac (CO2)	1.0000 *	0.2589	0.2589	0.0759	0.0759
Master Comp Mole Frac (Methanol)	0.0000 *	0.0000	0.0000	0.0000	0.0000
Master Comp Mole Frac (diM-Ether)	0.0000 *	0.0000	0.0000	0.0000	0.0000
Master Comp Mole Frac (1-Propanol)	0.0000 *	0.0000	0.0000	0.0000	0.0000

Name	10	SYNG	13	14	SYNG-RCY
Master Comp Mole Frac (H2O)	0.1834	0.0260	0.9999	0.9999	0.5989
Master Comp Mole Frac (Oxygen)	0.0000	0.0000	0.0000	0.0000	0.0000
Master Comp Mole Frac (Hydrogen)	0.5291	0.6311	0.0000	0.0000	0.2599
Master Comp Mole Frac (CO)	0.2116	0.2524	0.0000	0.0000	0.1039
Master Comp Mole Frac (CO2)	0.0759	0.0905	0.0001	0.0001	0.0373
Master Comp Mole Frac (Methanol)	0.0000	0.0000	0.0000	0.0000	0.0000
Master Comp Mole Frac (diM-Ether)	0.0000	0.0000	0.0000	0.0000	0.0000
Master Comp Mole Frac (1-Propanol)	0.0000	0.0000	0.0000	0.0000	0.0000

Workbook: Case (Main) (continued)

Composition (continued)

Fluid Pkg: All

Name	O2-OUT	18	17	11	19
Master Comp Mole Frac (H2O)	0.0000	0.6411	0.6411 *	0.1834	0.0260
Master Comp Mole Frac (Oxygen)	1.0000	0.0000	0.0000 *	0.0000	0.0000
Master Comp Mole Frac (Hydrogen)	0.0000	0.0714	0.0714 *	0.5291	0.6311
Master Comp Mole Frac (CO)	0.0000	0.0286	0.0286 *	0.2116	0.2524
Master Comp Mole Frac (CO2)	0.0000	0.2589	0.2589 *	0.0759	0.0905
Master Comp Mole Frac (Methanol)	0.0000	0.0000	0.0000 *	0.0000	0.0000
Master Comp Mole Frac (diM-Ether)	0.0000	0.0000	0.0000 *	0.0000	0.0000
Master Comp Mole Frac (1-Propanol)	0.0000	0.0000	0.0000 *	0.0000	0.0000

Name	20	WATER-OUT	CO2-OUT	Hydrogen	O2-IN-1
Master Comp Mole Frac (H2O)	0.0260	0.9994	0.0259	0.0000	0.0000 *
Master Comp Mole Frac (Oxygen)	0.0000	0.0000	0.0001	0.0000	1.0000 *
Master Comp Mole Frac (Hydrogen)	0.6311	0.0000	0.0000	0.9999	0.0000 *
Master Comp Mole Frac (CO)	0.2524	0.0000	0.0000	0.0001	0.0000 *
Master Comp Mole Frac (CO2)	0.0905	0.0006	0.9740	0.0000	0.0000 *
Master Comp Mole Frac (Methanol)	0.0000	0.0000	0.0000	0.0000	0.0000 *
Master Comp Mole Frac (diM-Ether)	0.0000	0.0000	0.0000	0.0000	0.0000 *
Master Comp Mole Frac (1-Propanol)	0.0000	0.0000	0.0000	0.0000	0.0000 *

Name	Purge gas	29	COMB-PROD-2	O2-IN-2	29-2
Master Comp Mole Frac (H2O)	0.0561	0.2603	0.2603	0.0000 *	0.9998
Master Comp Mole Frac (Oxygen)	0.0000	0.0000	0.0000	1.0000 *	0.0000
Master Comp Mole Frac (Hydrogen)	0.2042	0.0000	0.0000	0.0000 *	0.0000
Master Comp Mole Frac (CO)	0.5444	0.0000	0.0000	0.0000 *	0.0000
Master Comp Mole Frac (CO2)	0.1953	0.7396	0.7396	0.0000 *	0.0001
Master Comp Mole Frac (Methanol)	0.0000	0.0000	0.0000	0.0000 *	0.0000
Master Comp Mole Frac (diM-Ether)	0.0000	0.0000	0.0000	0.0000 *	0.0000
Master Comp Mole Frac (1-Propanol)	0.0000	0.0000	0.0000	0.0000 *	0.0000

Name	COMB-PROD-2-2	1
Master Comp Mole Frac (H2O)	0.9998	0.0260
Master Comp Mole Frac (Oxygen)	0.0000	0.0000
Master Comp Mole Frac (Hydrogen)	0.0000	0.6311
Master Comp Mole Frac (CO)	0.0000	0.2524
Master Comp Mole Frac (CO2)	0.0001	0.0905
Master Comp Mole Frac (Methanol)	0.0000	0.0000
Master Comp Mole Frac (diM-Ether)	0.0000	0.0000
Master Comp Mole Frac (1-Propanol)	0.0000	0.0000

Unit Ops

Operation Name	Operation Type	Feeds	Products	Ignored	Calc Level
Syngas Circulator	Compressor	6	10	No	500.0 *
		Circ Pwr			
SG CMP STG1	Compressor	SYNG	19	No	500.0 *
		ST1 PWR			
SG CMP STG2	Compressor	20	1	No	500.0 *
		ST2 PWR			
M1	Mixer	WATER-IN	8	No	500.0 *
		CO2-IN			
		SYNG-RCY			
M2	Mixer	14	SYNG-RCY	No	500.0 *
		10			
Hi Temp Recup	LNG	H2,CO,H2O Out	25	No	500.0 *
		5	4		

Workbook: Case (Main) (continued)

Unit Ops (continued)

Operation Name	Operation Type	Feeds	Products	Ignored	Calc Level
Hi Temp Recup	LNG	Hot O2	Warm O2	No	500.0 *
Lo Temp Recup	LNG	25 17 Warm O2	11 18 O2-OUT	No	500.0 *
RWGS 1	Equilibrium Reactor	9	400 CO2, Water In	No	500.0 *
COMBUSTOR 1	Conversion Reactor	O2-IN-1 Purge gas COMB1-Q	29 COMB-PROD-2 COMB1-Q	No	500.0 *
COMBUSTOR 2	Conversion Reactor	O2-IN-2 Hydrogen COMB-Q-2-2	29-2 COMB-PROD-2-2 COMB-Q-2-2	No	500.0 *
Water Knockout Tank	Separator	7 Amb Q	13 SYNG Amb Q	No	500.0 *
KO-DRM 2	Separator	COMB-PROD-2 COMB-PROD-2-2 AMB-Q-1	WATER-OUT CO2-OUT AMB-Q-1	No	500.0 *
INT CLR 1	Cooler	19	20 IC1 Q	No	500.0 *
RCY-4	Recycle	8	17	No	3500 *
T1	Tee	11	6 7	No	500.0 *
High Temperature Co-Electrol	Standard Sub-Flowsheet	Sweep Gas In CO2, Water In Process Heat Electrolysis Power	Hot O2 H2,CO,H2O Out	No	2500 *
Topping Heat	Heater	4 Top Heat Q	9	No	500.0 *
Preheater	Heater	18 Preheat Q	5	No	500.0 *
SPRDSHT-1	Spreadsheet			No	500.0 *
PSA Calcs	Spreadsheet			No	500.0 *
Water Pump	Pump	13 Water Pump Pwr	14	No	500.0 *
PSA	Component Splitter	1 PSA Power PSA heat	Hydrogen Purge gas	No	500.0 *
SET-1	Set			No	500.0 *
ADJ-1	Adjust			No	3500 *
ADJ-2	Adjust			Yes	3500 *

Honeywell	Company Name Not Available Calgary, Alberta CANADA	Case Name: \\vmware-host\...\PSA Results\Coelec w syngas and PSA ratio 2_5.usc Unit Set: NASA Date/Time: Wednesday Feb 16 2011, 10:37:43

Workbook: High Temperature Co-Electrolysis (TPL2)

Streams

Fluid Pkg: All

Name		Sweep Gas In @TPL2	O2 Out @TPL2	Gas Products @TPL2	Liquid @TPL2	Anode @TPL2
Vapour Fraction		1.0000	1.0000	1.0000	0.0000	1.0000
Temperature	(C)	800.3	800.0	800.0 *	800.0	800.0
Pressure	(kPa)	135.1	135.1	136.5	136.5	135.1
Molar Flow	(gmole/h)	1.000e-010	1.220	5.027	0.0000	1.220
Mass Flow	(kg/d)	4.357e-011	0.9366	2.183	0.0000	0.9366
Liquid Volume Flow	(m3/h)	1.815e-015	3.430e-005	1.690e-004	0.0000	3.430e-005
Heat Flow	(kW)	-5.841e-012	8.554e-003	-7.463e-002	0.0000	8.554e-003
Molar Enthalpy	(kJ/kgmole)	-2.103e+005	2.525e+004	-5.345e+004	-5.345e+004	2.525e+004
Name		H2,CO,H2O Out @TP	Cathode @TPL2	2 @TPL2	CO2, Water In @TPL2	Electrolysis Heatiing @
Vapour Fraction		1.0000	1.0000	0.0000	1.0000	---
Temperature	(C)	800.0 *	800.0 *	800.0	800.3	---
Pressure	(kPa)	135.1	135.1	135.1	137.9	---
Molar Flow	(gmole/h)	3.807	3.807	0.0000	3.807	---
Mass Flow	(kg/d)	1.246	1.246	0.0000	2.183	---
Liquid Volume Flow	(m3/h)	1.144e-004	1.347e-004	0.0000	1.083e-004	---
Heat Flow	(kW)	-7.644e-002	-8.319e-002	0.0000	-0.2428	0.1681
Molar Enthalpy	(kJ/kgmole)	-7.228e+004	-7.865e+004	-7.228e+004	-2.296e+005	---
Name		Process Heat @TPL2	Shift Reactor 2 Heat @	Electrolysis Power @T		
Vapour Fraction		---	---	---		
Temperature	(C)	---	---	---		
Pressure	(kPa)	---	---	---		
Molar Flow	(gmole/h)	---	---	---		
Mass Flow	(kg/d)	---	---	---		
Liquid Volume Flow	(m3/h)	---	---	---		
Heat Flow	(kW)	-6.856e-015	6.742e-003	0.1749		
Molar Enthalpy	(kJ/kgmole)	---	---	---		

Composition

Fluid Pkg: All

Name	Sweep Gas In @TPL2	O2 Out @TPL2	Gas Products @TPL2	Liquid @TPL2	Anode @TPL2
Comp Mole Frac (H2O)	0.9900	0.0000	0.0000	0.0000	0.0000
Comp Mole Frac (Oxygen)	0.0100	1.0000	0.2426	0.2426	1.0000
Comp Mole Frac (Hydrogen)	0.0000	0.0000	0.5397	0.5396	0.0000
Comp Mole Frac (CO)	0.0000	0.0000	0.0213	0.0213	0.0000
Comp Mole Frac (CO2)	0.0000	0.0000	0.1964	0.1964	0.0000
Comp Mole Frac (Methanol)	0.0000	0.0000	0.0000	0.0000	0.0000
Comp Mole Frac (diM-Ether)	0.0000	0.0000	0.0000	0.0000	0.0000
Comp Mole Frac (1-Propanol)	0.0000	0.0000	0.0000	0.0000	0.0000
Name	H2,CO,H2O Out @TP	Cathode @TPL2	2 @TPL2	CO2, Water In @TPL2	
Comp Mole Frac (H2O)	0.1834	0.0000	0.1834	0.6407	
Comp Mole Frac (Oxygen)	0.0000	0.0000	0.0000	0.0000	
Comp Mole Frac (Hydrogen)	0.5291	0.7125	0.5291	0.0718	
Comp Mole Frac (CO)	0.2116	0.0282	0.2116	0.0282	
Comp Mole Frac (CO2)	0.0759	0.2593	0.0759	0.2593	
Comp Mole Frac (Methanol)	0.0000	0.0000	0.0000	0.0000	
Comp Mole Frac (diM-Ether)	0.0000	0.0000	0.0000	0.0000	
Comp Mole Frac (1-Propanol)	0.0000	0.0000	0.0000	0.0000	

Unit Ops

Operation Name	Operation Type	Feeds	Products	Ignored	Calc Level
Temp Average ASR @TPL2	Spreadsheet			Yes	500.0 *
Electrolysis Spreadsheet @TF	Spreadsheet			No	500.0 *

Workbook: High Temperature Co-Electrolysis (TPL2) (continued)

Unit Ops (continued)

Operation Name	Operation Type	Feeds	Products	Ignored	Calc Level
Steam Electrolysis @TPL2	Spreadsheet			No	500.0 *
CO2 Electrolysis @TPL2	Spreadsheet			No	500.0 *
Sweep Gas/O2 Mixer @TPL2	Mixer	Anode @TPL2	O2 Out @TPL2	No	500.0 *
		Sweep Gas In @TPL2			
Isothermal Electrolysis @TPL2	Conversion Reactor	CO2, Water In @TPL2	Liquid @TPL2	No	500.0 *
		Electrolysis Heatiing @TPL2	Gas Products @TPL2		
			Electrolysis Heatiing @TPL2		
Electrodes @TPL2	Component Splitter	Gas Products @TPL2	Cathode @TPL2	No	500.0 *
			Anode @TPL2		
ADJ-2 @TPL2	Adjust			No	3500 *
ERV-100 @TPL2	Equilibrium Reactor	Cathode @TPL2	2 @TPL2	No	500.0 *
		Shift Reactor 2 Heat @TPL2	H2,CO,H2O Out @TPL2		
			Shift Reactor 2 Heat @TPL2		
SET-1 @TPL2	Set			No	500.0 *
SET-3 @TPL2	Set			No	500.0 *
SET-2 @TPL2	Set			No	500.0 *

Honeywell	Company Name Not Available Calgary, Alberta CANADA	Case Name: \\vmware-host\...\PSA Results\Coelec w syngas and PSA ratio 3.usc Unit Set: NASA Date/Time: Wednesday Feb 16 2011, 10:38:57

Workbook: Case (Main)

Streams

Fluid Pkg: All

Name		CO2, Water In	H2,CO,H2O Out	9	Sweep Gas In	Hot O2
Vapour Fraction		1.0000	1.0000	1.0000	1.0000	1.0000
Temperature	(C)	800.3	800.0	800.0 *	800.3	800.0
Pressure	(kPa)	137.9	135.1	137.9	135.1	135.1
Molar Flow	(gmole/h)	4.324	4.324	4.324	1.000e-010 *	1.455
Mass Flow	(kg/d)	2.382	1.264	2.382	4.357e-011	1.118
Std Ideal Liq Vol Flow	(m3/h)	1.180e-004	1.282e-004	1.179e-004	1.815e-015	4.094e-005
Heat Flow	(kW)	-0.2697	-7.217e-002	-0.2697	-5.841e-012	1.021e-002
Molar Enthalpy	(kJ/kgmole)	-2.245e+005	-6.008e+004	-2.245e+005	-2.103e+005	2.525e+004
Name		400	8	Warm O2	25	WATER-IN
Vapour Fraction		0.0000	0.3396	1.0000	1.0000	0.0000
Temperature	(C)	800.3	34.17	122.0	168.3	21.00 *
Pressure	(kPa)	137.9	137.9	135.1	135.1	137.9
Molar Flow	(gmole/h)	0.0000	4.324	1.455	4.324	2.267
Mass Flow	(kg/d)	0.0000	2.382	1.118	1.264	0.9800 *
Std Ideal Liq Vol Flow	(m3/h)	0.0000	1.179e-004	4.094e-005	1.282e-004	4.092e-005
Heat Flow	(kW)	-0.0000	-0.3404	1.160e-003	-9.698e-002	-0.1802
Molar Enthalpy	(kJ/kgmole)	-2.245e+005	-2.834e+005	2869	-8.074e+004	-2.862e+005
Name		CO2-IN	4	5	6	7
Vapour Fraction		1.0000	1.0000	0.9663	1.0000	1.0000
Temperature	(C)	21.00 *	775.0 *	97.00 *	122.0 *	122.0
Pressure	(kPa)	137.9 *	137.9	137.9	135.1	135.1
Molar Flow	(gmole/h)	0.9468	4.324	4.324	0.5591	3.765
Mass Flow	(kg/d)	1.000 *	2.382	2.382	0.1635	1.101
Std Ideal Liq Vol Flow	(m3/h)	5.048e-005	1.179e-004	1.179e-004	1.658e-005	1.116e-004
Heat Flow	(kW)	-0.1036	-0.2710	-0.3048	-1.276e-002	-8.592e-002
Molar Enthalpy	(kJ/kgmole)	-3.940e+005	-2.256e+005	-2.538e+005	-8.215e+004	-8.215e+004
Name		10	SYNG	13	14	SYNG-RCY
Vapour Fraction		1.0000	1.0000	0.0000	0.0000	0.4952
Temperature	(C)	124.9	26.67 *	26.67	26.67	61.41
Pressure	(kPa)	137.9	135.1	135.1	137.9	137.9
Molar Flow	(gmole/h)	0.5591	3.213	0.5517	0.5517	1.111
Mass Flow	(kg/d)	0.1635	0.8623	0.2385	0.2385	0.4020
Std Ideal Liq Vol Flow	(m3/h)	1.658e-005	1.017e-004	9.960e-006	9.960e-006	2.654e-005
Heat Flow	(kW)	-1.275e-002	-5.188e-002	-4.379e-002	-4.379e-002	-5.654e-002
Molar Enthalpy	(kJ/kgmole)	-8.206e+004	-5.812e+004	-2.858e+005	-2.858e+005	-1.832e+005
Name		O2-OUT	18	17	11	19
Vapour Fraction		1.0000	0.3619	0.3396	1.0000	1.0000
Temperature	(C)	59.17	51.66	34.17 *	122.0	176.7 *
Pressure	(kPa)	135.1	137.9	137.9 *	135.1	421.6
Molar Flow	(gmole/h)	1.455	4.324	4.324 *	4.324	3.213
Mass Flow	(kg/d)	1.118	2.382	2.382	1.264	0.8623
Std Ideal Liq Vol Flow	(m3/h)	4.094e-005	1.179e-004	1.179e-004	1.282e-004	1.017e-004
Heat Flow	(kW)	4.011e-004	-0.3379	-0.3404	-9.868e-002	-4.790e-002
Molar Enthalpy	(kJ/kgmole)	992.3	-2.813e+005	-2.834e+005	-8.215e+004	-5.367e+004

Workbook: Case (Main) (continued)

Streams (continued)

Fluid Pkg: All

Name		20	WATER-OUT	CO2-OUT	Hydrogen	O2-IN-1
Vapour Fraction		1.0000	0.0000	1.0000	1.0000	1.0000
Temperature	(C)	54.44 *	26.67	26.67 *	119.0 *	26.67 *
Pressure	(kPa)	421.6	137.9	137.9	620.5	137.9 *
Molar Flow	(gmole/h)	3.213	2.243	0.9707	1.856	0.5276
Mass Flow	(kg/d)	0.8623	0.9707	1.010	8.994e-002	0.4052 *
Std Ideal Liq Vol Flow	(m3/h)	1.017e-004	4.054e-005	5.087e-005	5.356e-005	1.484e-005
Heat Flow	(kW)	-5.116e-002	-0.1781	-0.1051	1.378e-003	5.264e-006
Molar Enthalpy	(kJ/kgmole)	-5.732e+004	-2.858e+005	-3.898e+005	2674	35.92
Name		Purge gas	29	COMB-PROD-2	O2-IN-2	29-2
Vapour Fraction		1.0000	0.0000	1.0000	1.0000	0.0000
Temperature	(C)	119.0	1000	1000 *	26.67 *	1000
Pressure	(kPa)	172.4 *	137.9	137.9	137.9 *	137.9
Molar Flow	(gmole/h)	1.358	0.0000	1.358	0.9280	0.0000
Mass Flow	(kg/d)	0.7724	0.0000	1.178	0.7127 *	0.0000
Std Ideal Liq Vol Flow	(m3/h)	4.813e-005	0.0000	5.790e-005	2.610e-005	0.0000
Heat Flow	(kW)	-5.082e-002	-0.0000	-0.1142	9.259e-006	-0.0000
Molar Enthalpy	(kJ/kgmole)	-1.348e+005	-3.027e+005	-3.027e+005	35.92	-2.041e+005
Name		COMB-PROD-2-2	1	Electrolysis Power	Process Heat	Top Heat Q
Vapour Fraction		1.0000	1.0000	---	---	---
Temperature	(C)	1000 *	119.1	---	---	---
Pressure	(kPa)	137.9	689.5 *	---	---	---
Molar Flow	(gmole/h)	1.856	3.213	---	---	---
Mass Flow	(kg/d)	0.8026	0.8623	---	---	---
Std Ideal Liq Vol Flow	(m3/h)	3.351e-005	1.017e-004	---	---	---
Heat Flow	(kW)	-0.1052	-4.945e-002	0.2077	-5.428e-013	1.315e-003
Molar Enthalpy	(kJ/kgmole)	-2.041e+005	-5.540e+004	---	---	---
Name		Preheat Q	Circ Pwr	Amb Q	Water Pump Pwr	ST1 PWR
Vapour Fraction		---	---	---	---	---
Temperature	(C)	---	---	---	---	---
Pressure	(kPa)	---	---	---	---	---
Molar Flow	(gmole/h)	---	---	---	---	---
Mass Flow	(kg/d)	---	---	---	---	---
Std Ideal Liq Vol Flow	(m3/h)	---	---	---	---	---
Heat Flow	(kW)	3.307e-002	1.378e-005	-9.754e-003	1.009e-008	3.980e-003
Molar Enthalpy	(kJ/kgmole)	---	---	---	---	---
Name		IC1 Q	ST2 PWR	AMB-Q-1	PSA Power	PSA heat
Vapour Fraction		---	---	---	---	---
Temperature	(C)	---	---	---	---	---
Pressure	(kPa)	---	---	---	---	---
Molar Flow	(gmole/h)	---	---	---	---	---
Mass Flow	(kg/d)	---	---	---	---	---
Std Ideal Liq Vol Flow	(m3/h)	---	---	---	---	---
Heat Flow	(kW)	3.258e-003	1.712e-003	-6.382e-002	6.984e-006	-1.776e-015
Molar Enthalpy	(kJ/kgmole)	---	---	---	---	---

Workbook: Case (Main) (continued)

Streams (continued)

Fluid Pkg: All

Name		COMB1-Q	COMB-Q-2-2			
Vapour Fraction		---	---			
Temperature	(C)	---	---			
Pressure	(kPa)	---	---			
Molar Flow	(gmole/h)	---	---			
Mass Flow	(kg/d)	---	---			
Std Ideal Liq Vol Flow	(m3/h)	---	---			
Heat Flow	(kW)	-6.334e-002	-0.1066			
Molar Enthalpy	(kJ/kgmole)	---	---			

Composition

Fluid Pkg: All

Name	CO2, Water In	H2,CO,H2O Out	9	Sweep Gas In	Hot O2
Master Comp Mole Frac (H2O)	0.6732	0.1687	0.6736	0.9900 *	0.0000
Master Comp Mole Frac (Oxygen)	0.0000	0.0000	0.0000	0.0100 *	1.0000
Master Comp Mole Frac (Hydrogen)	0.0754	0.5798	0.0750	0.0000 *	0.0000
Master Comp Mole Frac (CO)	0.0246	0.1933	0.0250	0.0000 *	0.0000
Master Comp Mole Frac (CO2)	0.2269	0.0582	0.2265	0.0000 *	0.0000
Master Comp Mole Frac (Methanol)	0.0000	0.0000	0.0000	0.0000 *	0.0000
Master Comp Mole Frac (diM-Ether)	0.0000	0.0000	0.0000	0.0000 *	0.0000
Master Comp Mole Frac (1-Propanol)	0.0000	0.0000	0.0000	0.0000 *	0.0000

Name	400	8	Warm O2	25	WATER-IN
Master Comp Mole Frac (H2O)	0.6732	0.6736	0.0000	0.1687	1.0000 *
Master Comp Mole Frac (Oxygen)	0.0000	0.0000	1.0000	0.0000	0.0000 *
Master Comp Mole Frac (Hydrogen)	0.0754	0.0750	0.0000	0.5798	0.0000 *
Master Comp Mole Frac (CO)	0.0246	0.0250	0.0000	0.1933	0.0000 *
Master Comp Mole Frac (CO2)	0.2269	0.2265	0.0000	0.0582	0.0000 *
Master Comp Mole Frac (Methanol)	0.0000	0.0000	0.0000	0.0000	0.0000 *
Master Comp Mole Frac (diM-Ether)	0.0000	0.0000	0.0000	0.0000	0.0000 *
Master Comp Mole Frac (1-Propanol)	0.0000	0.0000	0.0000	0.0000	0.0000 *

Name	CO2-IN	4	5	6	7
Master Comp Mole Frac (H2O)	0.0000 *	0.6736	0.6736	0.1687	0.1687
Master Comp Mole Frac (Oxygen)	0.0000 *	0.0000	0.0000	0.0000	0.0000
Master Comp Mole Frac (Hydrogen)	0.0000 *	0.0750	0.0750	0.5798	0.5798
Master Comp Mole Frac (CO)	0.0000 *	0.0250	0.0250	0.1933	0.1933
Master Comp Mole Frac (CO2)	1.0000 *	0.2265	0.2265	0.0582	0.0582
Master Comp Mole Frac (Methanol)	0.0000 *	0.0000	0.0000	0.0000	0.0000
Master Comp Mole Frac (diM-Ether)	0.0000 *	0.0000	0.0000	0.0000	0.0000
Master Comp Mole Frac (1-Propanol)	0.0000 *	0.0000	0.0000	0.0000	0.0000

Name	10	SYNG	13	14	SYNG-RCY
Master Comp Mole Frac (H2O)	0.1687	0.0260	0.9999	0.9999	0.5815
Master Comp Mole Frac (Oxygen)	0.0000	0.0000	0.0000	0.0000	0.0000
Master Comp Mole Frac (Hydrogen)	0.5798	0.6794	0.0001	0.0001	0.2919
Master Comp Mole Frac (CO)	0.1933	0.2265	0.0000	0.0000	0.0973
Master Comp Mole Frac (CO2)	0.0582	0.0681	0.0000	0.0000	0.0293
Master Comp Mole Frac (Methanol)	0.0000	0.0000	0.0000	0.0000	0.0000
Master Comp Mole Frac (diM-Ether)	0.0000	0.0000	0.0000	0.0000	0.0000
Master Comp Mole Frac (1-Propanol)	0.0000	0.0000	0.0000	0.0000	0.0000

Workbook: Case (Main) (continued)

Composition (continued)

Fluid Pkg: All

Name	O2-OUT	18	17	11	19
Master Comp Mole Frac (H2O)	0.0000	0.6736	0.6736 *	0.1687	0.0260
Master Comp Mole Frac (Oxygen)	1.0000	0.0000	0.0000 *	0.0000	0.0000
Master Comp Mole Frac (Hydrogen)	0.0000	0.0750	0.0750 *	0.5798	0.6794
Master Comp Mole Frac (CO)	0.0000	0.0250	0.0250 *	0.1933	0.2265
Master Comp Mole Frac (CO2)	0.0000	0.2265	0.2265 *	0.0582	0.0681
Master Comp Mole Frac (Methanol)	0.0000	0.0000	0.0000 *	0.0000	0.0000
Master Comp Mole Frac (diM-Ether)	0.0000	0.0000	0.0000 *	0.0000	0.0000
Master Comp Mole Frac (1-Propanol)	0.0000	0.0000	0.0000 *	0.0000	0.0000

Name	20	WATER-OUT	CO2-OUT	Hydrogen	O2-IN-1
Master Comp Mole Frac (H2O)	0.0260	0.9994	0.0259	0.0000	0.0000 *
Master Comp Mole Frac (Oxygen)	0.0000	0.0000	0.0002	0.0000	1.0000 *
Master Comp Mole Frac (Hydrogen)	0.6794	0.0000	0.0000	0.9999	0.0000 *
Master Comp Mole Frac (CO)	0.2265	0.0000	0.0000	0.0001	0.0000 *
Master Comp Mole Frac (CO2)	0.0681	0.0006	0.9738	0.0000	0.0000 *
Master Comp Mole Frac (Methanol)	0.0000	0.0000	0.0000	0.0000	0.0000 *
Master Comp Mole Frac (diM-Ether)	0.0000	0.0000	0.0000	0.0000	0.0000 *
Master Comp Mole Frac (1-Propanol)	0.0000	0.0000	0.0000	0.0000	0.0000 *

Name	Purge gas	29	COMB-PROD-2	O2-IN-2	29-2
Master Comp Mole Frac (H2O)	0.0615	0.3027	0.3027	0.0000 *	0.9998
Master Comp Mole Frac (Oxygen)	0.0000	0.0001	0.0001	1.0000 *	0.0001
Master Comp Mole Frac (Hydrogen)	0.2412	0.0000	0.0000	0.0000 *	0.0000
Master Comp Mole Frac (CO)	0.5359	0.0000	0.0000	0.0000 *	0.0000
Master Comp Mole Frac (CO2)	0.1613	0.6972	0.6972	0.0000 *	0.0001
Master Comp Mole Frac (Methanol)	0.0000	0.0000	0.0000	0.0000 *	0.0000
Master Comp Mole Frac (diM-Ether)	0.0000	0.0000	0.0000	0.0000 *	0.0000
Master Comp Mole Frac (1-Propanol)	0.0000	0.0000	0.0000	0.0000 *	0.0000

Name	COMB-PROD-2-2	1
Master Comp Mole Frac (H2O)	0.9998	0.0260
Master Comp Mole Frac (Oxygen)	0.0001	0.0000
Master Comp Mole Frac (Hydrogen)	0.0000	0.6794
Master Comp Mole Frac (CO)	0.0000	0.2265
Master Comp Mole Frac (CO2)	0.0001	0.0681
Master Comp Mole Frac (Methanol)	0.0000	0.0000
Master Comp Mole Frac (diM-Ether)	0.0000	0.0000
Master Comp Mole Frac (1-Propanol)	0.0000	0.0000

Unit Ops

Operation Name	Operation Type	Feeds	Products	Ignored	Calc Level
Syngas Circulator	Compressor	6	10	No	500.0 *
		Circ Pwr			
SG CMP STG1	Compressor	SYNG	19	No	500.0 *
		ST1 PWR			
SG CMP STG2	Compressor	20	1	No	500.0 *
		ST2 PWR			
M1	Mixer	WATER-IN	8	No	500.0 *
		CO2-IN			
		SYNG-RCY			
M2	Mixer	14	SYNG-RCY	No	500.0 *
		10			
Hi Temp Recup	LNG	H2,CO,H2O Out	25	No	500.0 *
		5	4		

Workbook: Case (Main) (continued)

Unit Ops (continued)

Operation Name	Operation Type	Feeds	Products	Ignored	Calc Level
Hi Temp Recup	LNG	Hot O2	Warm O2	No	500.0 *
Lo Temp Recup	LNG	25 17 Warm O2	11 18 O2-OUT	No	500.0 *
RWGS 1	Equilibrium Reactor	9	400 CO2, Water In	No	500.0 *
COMBUSTOR 1	Conversion Reactor	O2-IN-1 Purge gas COMB1-Q	29 COMB-PROD-2 COMB1-Q	No	500.0 *
COMBUSTOR 2	Conversion Reactor	O2-IN-2 Hydrogen COMB-Q-2-2	29-2 COMB-PROD-2-2 COMB-Q-2-2	No	500.0 *
Water Knockout Tank	Separator	7 Amb Q	13 SYNG Amb Q	No	500.0 *
KO-DRM 2	Separator	COMB-PROD-2 COMB-PROD-2-2 AMB-Q-1	WATER-OUT CO2-OUT AMB-Q-1	No	500.0 *
INT CLR 1	Cooler	19	20 IC1 Q	No	500.0 *
RCY-4	Recycle	8	17	No	3500 *
T1	Tee	11	6 7	No	500.0 *
High Temperature Co-Electrol	Standard Sub-Flowsheet	Sweep Gas In CO2, Water In Process Heat Electrolysis Power	Hot O2 H2,CO,H2O Out	No	2500 *
Topping Heat	Heater	4 Top Heat Q	9	No	500.0 *
Preheater	Heater	18 Preheat Q	5	No	500.0 *
SPRDSHT-1	Spreadsheet			No	500.0 *
PSA Calcs	Spreadsheet			No	500.0 *
Water Pump	Pump	13 Water Pump Pwr	14	No	500.0 *
PSA	Component Splitter	1 PSA Power PSA heat	Hydrogen Purge gas	No	500.0 *
SET-1	Set			No	500.0 *
ADJ-1	Adjust			No	3500 *
ADJ-2	Adjust			Yes	3500 *

Honeywell	Company Name Not Available Calgary, Alberta CANADA	Case Name: \\vmware-host\...\PSA Results\Coelec w syngas and PSA ratio 3.usc Unit Set: NASA Date/Time: Wednesday Feb 16 2011, 10:38:57

Workbook: High Temperature Co-Electrolysis (TPL2)

Streams

Fluid Pkg: All

Name		Sweep Gas In @TPL2	O2 Out @TPL2	Gas Products @TPL2	Liquid @TPL2	Anode @TPL2
Vapour Fraction		1.0000	1.0000	1.0000	0.0000	1.0000
Temperature	(C)	800.3	800.0	800.0 *	800.0	800.0
Pressure	(kPa)	135.1	135.1	136.5	136.5	135.1
Molar Flow	(gmole/h)	1.000e-010	1.455	5.780	0.0000	1.455
Mass Flow	(kg/d)	4.357e-011	1.118	2.382	0.0000	1.118
Liquid Volume Flow	(m3/h)	1.815e-015	4.094e-005	1.904e-004	0.0000	4.094e-005
Heat Flow	(kW)	-5.841e-012	1.021e-002	-6.900e-002	-0.0000	1.021e-002
Molar Enthalpy	(kJ/kgmole)	-2.103e+005	2.525e+004	-4.298e+004	-4.298e+004	2.525e+004
Name		H2,CO,H2O Out @TP	Cathode @TPL2	2 @TPL2	CO2, Water In @TPL2	Electrolysis Heatiing @
Vapour Fraction		1.0000	1.0000	0.0000	1.0000	---
Temperature	(C)	800.0 *	800.0 *	800.0	800.3	---
Pressure	(kPa)	135.1	135.1	135.1	137.9	---
Molar Flow	(gmole/h)	4.324	4.324	0.0000	4.324	---
Mass Flow	(kg/d)	1.264	1.264	0.0000	2.382	---
Liquid Volume Flow	(m3/h)	1.282e-004	1.494e-004	0.0000	1.180e-004	---
Heat Flow	(kW)	-7.217e-002	-7.921e-002	-0.0000	-0.2697	0.2007
Molar Enthalpy	(kJ/kgmole)	-6.008e+004	-6.594e+004	-6.008e+004	-2.245e+005	---
Name		Process Heat @TPL2	Shift Reactor 2 Heat @	Electrolysis Power @T		
Vapour Fraction		---	---	---		
Temperature	(C)	---	---	---		
Pressure	(kPa)	---	---	---		
Molar Flow	(gmole/h)	---	---	---		
Mass Flow	(kg/d)	---	---	---		
Liquid Volume Flow	(m3/h)	---	---	---		
Heat Flow	(kW)	-5.428e-013	7.043e-003	0.2077		
Molar Enthalpy	(kJ/kgmole)	---	---	---		

Composition

Fluid Pkg: All

Name	Sweep Gas In @TPL2	O2 Out @TPL2	Gas Products @TPL2	Liquid @TPL2	Anode @TPL2
Comp Mole Frac (H2O)	0.9900	0.0000	0.0000	0.0000	0.0000
Comp Mole Frac (Oxygen)	0.0100	1.0000	0.2518	0.2518	1.0000
Comp Mole Frac (Hydrogen)	0.0000	0.0000	0.5600	0.5600	0.0000
Comp Mole Frac (CO)	0.0000	0.0000	0.0184	0.0184	0.0000
Comp Mole Frac (CO2)	0.0000	0.0000	0.1697	0.1698	0.0000
Comp Mole Frac (Methanol)	0.0000	0.0000	0.0000	0.0000	0.0000
Comp Mole Frac (diM-Ether)	0.0000	0.0000	0.0000	0.0000	0.0000
Comp Mole Frac (1-Propanol)	0.0000	0.0000	0.0000	0.0000	0.0000
Name	H2,CO,H2O Out @TP	Cathode @TPL2	2 @TPL2	CO2, Water In @TPL2	
Comp Mole Frac (H2O)	0.1687	0.0000	0.1687	0.6732	
Comp Mole Frac (Oxygen)	0.0000	0.0000	0.0000	0.0000	
Comp Mole Frac (Hydrogen)	0.5798	0.7485	0.5798	0.0754	
Comp Mole Frac (CO)	0.1933	0.0246	0.1933	0.0246	
Comp Mole Frac (CO2)	0.0582	0.2269	0.0582	0.2269	
Comp Mole Frac (Methanol)	0.0000	0.0000	0.0000	0.0000	
Comp Mole Frac (diM-Ether)	0.0000	0.0000	0.0000	0.0000	
Comp Mole Frac (1-Propanol)	0.0000	0.0000	0.0000	0.0000	

Unit Ops

Operation Name	Operation Type	Feeds	Products	Ignored	Calc Level
Temp Average ASR @TPL2	Spreadsheet			Yes	500.0 *
Electrolysis Spreadsheet @TF	Spreadsheet			No	500.0 *

Workbook: High Temperature Co-Electrolysis (TPL2) (continued)

Unit Ops (continued)

Operation Name	Operation Type	Feeds	Products	Ignored	Calc Level
Steam Electrolysis @TPL2	Spreadsheet			No	500.0 *
CO2 Electrolysis @TPL2	Spreadsheet			No	500.0 *
Sweep Gas/O2 Mixer @TPL2	Mixer	Anode @TPL2	O2 Out @TPL2	No	500.0 *
		Sweep Gas In @TPL2			
Isothermal Electrolysis @TPL2	Conversion Reactor	CO2, Water In @TPL2	Liquid @TPL2	No	500.0 *
		Electrolysis Heatiing @TPL2	Gas Products @TPL2		
			Electrolysis Heatiing @TPL2		
Electrodes @TPL2	Component Splitter	Gas Products @TPL2	Cathode @TPL2	No	500.0 *
			Anode @TPL2		
ADJ-1 @TPL2	Adjust			No	3500 *
ERV-100 @TPL2	Equilibrium Reactor	Cathode @TPL2	2 @TPL2	No	500.0 *
		Shift Reactor 2 Heat @TPL2	H2,CO,H2O Out @TPL2		
			Shift Reactor 2 Heat @TPL2		
SET-1 @TPL2	Set			No	500.0 *
SET-3 @TPL2	Set			No	500.0 *
SET-2 @TPL2	Set			No	500.0 *

Honeywell	Company Name Not Available Calgary, Alberta CANADA	Case Name: \\vmware-host\...\PSA Results\Coelec w syngas and PSA ratio 3_5.usc Unit Set: NASA Date/Time: Wednesday Feb 16 2011, 10:40:20

Workbook: Case (Main)

Streams

Fluid Pkg: All

Name		CO2, Water In	H2,CO,H2O Out	9	Sweep Gas In	Hot O2
Vapour Fraction		1.0000	1.0000	1.0000	1.0000	1.0000
Temperature	(C)	800.3	800.0	800.0 *	800.3	800.0
Pressure	(kPa)	137.9	135.1	137.9	135.1	135.1
Molar Flow	(gmole/h)	4.844	4.844	4.844	1.000e-010 *	1.692
Mass Flow	(kg/d)	2.584	1.285	2.584	4.357e-011	1.299
Std Ideal Liq Vol Flow	(m3/h)	1.278e-004	1.424e-004	1.277e-004	1.815e-015	4.758e-005
Heat Flow	(kW)	-0.2968	-6.813e-002	-0.2968	-5.841e-012	1.186e-002
Molar Enthalpy	(kJ/kgmole)	-2.206e+005	-5.064e+004	-2.206e+005	-2.103e+005	2.525e+004
Name		400	8	Warm O2	25	WATER-IN
Vapour Fraction		0.0000	0.3127	1.0000	1.0000	0.0000
Temperature	(C)	800.3	33.25	123.0	168.4	21.00 *
Pressure	(kPa)	137.9	137.9	135.1	135.1	137.9
Molar Flow	(gmole/h)	0.0000	4.844	1.692	4.844	2.727
Mass Flow	(kg/d)	0.0000	2.584	1.299	1.285	1.179 *
Std Ideal Liq Vol Flow	(m3/h)	0.0000	1.277e-004	4.758e-005	1.424e-004	4.922e-005
Heat Flow	(kW)	-0.0000	-0.3774	1.362e-003	-9.560e-002	-0.2168
Molar Enthalpy	(kJ/kgmole)	-2.206e+005	-2.804e+005	2899	-7.105e+004	-2.862e+005
Name		CO2-IN	4	5	6	7
Vapour Fraction		1.0000	1.0000	0.9603	1.0000	1.0000
Temperature	(C)	21.00 *	775.0 *	98.00 *	123.0 *	123.0
Pressure	(kPa)	137.9 *	137.9	137.9	135.1	135.1
Molar Flow	(gmole/h)	0.9468	4.844	4.844	0.6065	4.238
Mass Flow	(kg/d)	1.000 *	2.584	2.584	0.1608	1.124
Std Ideal Liq Vol Flow	(m3/h)	5.048e-005	1.277e-004	1.277e-004	1.783e-005	1.246e-004
Heat Flow	(kW)	-0.1036	-0.2982	-0.3362	-1.220e-002	-8.525e-002
Molar Enthalpy	(kJ/kgmole)	-3.940e+005	-2.216e+005	-2.499e+005	-7.242e+004	-7.242e+004
Name		10	SYNG	13	14	SYNG-RCY
Vapour Fraction		1.0000	1.0000	0.0000	0.0000	0.5132
Temperature	(C)	125.9	26.67 *	26.67	26.67	60.31
Pressure	(kPa)	137.9	135.1	135.1	137.9	137.9
Molar Flow	(gmole/h)	0.6065	3.674	0.5640	0.5640	1.170
Mass Flow	(kg/d)	0.1608	0.8799	0.2438	0.2438	0.4047
Std Ideal Liq Vol Flow	(m3/h)	1.783e-005	1.144e-004	1.018e-005	1.018e-005	2.801e-005
Heat Flow	(kW)	-1.219e-002	-5.078e-002	-4.477e-002	-4.477e-002	-5.695e-002
Molar Enthalpy	(kJ/kgmole)	-7.234e+004	-4.976e+004	-2.858e+005	-2.858e+005	-1.752e+005
Name		O2-OUT	18	17	11	19
Vapour Fraction		1.0000	0.3336	0.3127	1.0000	1.0000
Temperature	(C)	58.25	51.48	33.25 *	123.0	176.7 *
Pressure	(kPa)	135.1	137.9	137.9 *	135.1	418.4
Molar Flow	(gmole/h)	1.692	4.844	4.844 *	4.844	3.674
Mass Flow	(kg/d)	1.299	2.584	2.584	1.285	0.8799
Std Ideal Liq Vol Flow	(m3/h)	4.758e-005	1.277e-004	1.277e-004	1.424e-004	1.144e-004
Heat Flow	(kW)	4.534e-004	-0.3746	-0.3774	-9.745e-002	-4.626e-002
Molar Enthalpy	(kJ/kgmole)	965.0	-2.784e+005	-2.804e+005	-7.242e+004	-4.533e+004

Workbook: Case (Main) (continued)

Streams (continued)

Fluid Pkg: All

Name		20	WATER-OUT	CO2-OUT	Hydrogen	O2-IN-1
Vapour Fraction		1.0000	0.0000	1.0000	1.0000	1.0000
Temperature	(C)	54.44 *	26.67	26.67 *	120.5 *	26.67 *
Pressure	(kPa)	418.4	137.9	137.9	620.5	137.9 *
Molar Flow	(gmole/h)	3.674	2.703	0.9704	2.237	0.5733
Mass Flow	(kg/d)	0.8799	1.170	1.009	0.1084	0.4403 *
Std Ideal Liq Vol Flow	(m3/h)	1.144e-004	4.886e-005	5.085e-005	6.456e-005	1.613e-005
Heat Flow	(kW)	-4.996e-002	-0.2147	-0.1051	1.690e-003	5.720e-006
Molar Enthalpy	(kJ/kgmole)	-4.896e+004	-2.858e+005	-3.898e+005	2720	35.92
Name		Purge gas	29	COMB-PROD-2	O2-IN-2	29-2
Vapour Fraction		1.0000	0.0000	1.0000	1.0000	0.0000
Temperature	(C)	120.5	1000	1000 *	26.67 *	1000
Pressure	(kPa)	172.4 *	137.9	137.9	137.9 *	137.9
Molar Flow	(gmole/h)	1.437	0.0000	1.437	1.118	0.0000
Mass Flow	(kg/d)	0.7715	0.0000	1.212	0.8590 *	0.0000
Std Ideal Liq Vol Flow	(m3/h)	4.984e-005	0.0000	5.933e-005	3.146e-005	0.0000
Heat Flow	(kW)	-4.965e-002	-0.0000	-0.1186	1.116e-005	-0.0000
Molar Enthalpy	(kJ/kgmole)	-1.244e+005	-2.973e+005	-2.973e+005	35.92	-2.041e+005
Name		COMB-PROD-2-2	1	Electrolysis Power	Process Heat	Top Heat Q
Vapour Fraction		1.0000	1.0000	---	---	---
Temperature	(C)	1000 *	120.6	---	---	---
Pressure	(kPa)	137.9	689.5 *	---	---	---
Molar Flow	(gmole/h)	2.237	3.674	---	---	---
Mass Flow	(kg/d)	0.9674	0.8799	---	---	---
Std Ideal Liq Vol Flow	(m3/h)	4.039e-005	1.144e-004	---	---	---
Heat Flow	(kW)	-0.1268	-4.797e-002	0.2405	1.762e-010	1.462e-003
Molar Enthalpy	(kJ/kgmole)	-2.041e+005	-4.701e+004	---	---	---
Name		Preheat Q	Circ Pwr	Amb Q	Water Pump Pwr	ST1 PWR
Vapour Fraction		---	---	---	---	---
Temperature	(C)	---	---	---	---	---
Pressure	(kPa)	---	---	---	---	---
Molar Flow	(gmole/h)	---	---	---	---	---
Mass Flow	(kg/d)	---	---	---	---	---
Std Ideal Liq Vol Flow	(m3/h)	---	---	---	---	---
Heat Flow	(kW)	0.0384	1.499e-005	-1.029e-002	1.032e-008	4.520e-003
Molar Enthalpy	(kJ/kgmole)	---	---	---	---	---
Name		IC1 Q	ST2 PWR	AMB-Q-1	PSA Power	PSA heat
Vapour Fraction		---	---	---	---	---
Temperature	(C)	---	---	---	---	---
Pressure	(kPa)	---	---	---	---	---
Molar Flow	(gmole/h)	---	---	---	---	---
Mass Flow	(kg/d)	---	---	---	---	---
Std Ideal Liq Vol Flow	(m3/h)	---	---	---	---	---
Heat Flow	(kW)	3.699e-003	1.990e-003	-7.427e-002	7.984e-006	-5.709e-013
Molar Enthalpy	(kJ/kgmole)	---	---	---	---	---

Workbook: Case (Main) (continued)

Streams (continued)

Fluid Pkg: All

Name		COMB1-Q	COMB-Q-2-2			
Vapour Fraction		---	---			
Temperature	(C)	---	---			
Pressure	(kPa)	---	---			
Molar Flow	(gmole/h)	---	---			
Mass Flow	(kg/d)	---	---			
Std Ideal Liq Vol Flow	(m3/h)	---	---			
Heat Flow	(kW)	-6.900e-002	-0.1285			
Molar Enthalpy	(kJ/kgmole)	---	---			

Composition

Fluid Pkg: All

Name	CO2, Water In	H2,CO,H2O Out	9	Sweep Gas In	Hot O2
Master Comp Mole Frac (H2O)	0.6984	0.1556	0.6988	0.9900 *	0.0000
Master Comp Mole Frac (Oxygen)	0.0000	0.0000	0.0000	0.0100 *	1.0000
Master Comp Mole Frac (Hydrogen)	0.0781	0.6210	0.0778	0.0000 *	0.0000
Master Comp Mole Frac (CO)	0.0218	0.1774	0.0222	0.0000 *	0.0000
Master Comp Mole Frac (CO2)	0.2016	0.0460	0.2012	0.0000 *	0.0000
Master Comp Mole Frac (Methanol)	0.0000	0.0000	0.0000	0.0000 *	0.0000
Master Comp Mole Frac (diM-Ether)	0.0000	0.0000	0.0000	0.0000 *	0.0000
Master Comp Mole Frac (1-Propanol)	0.0000	0.0000	0.0000	0.0000 *	0.0000

Name	400	8	Warm O2	25	WATER-IN
Master Comp Mole Frac (H2O)	0.6984	0.6988	0.0000	0.1556	1.0000 *
Master Comp Mole Frac (Oxygen)	0.0000	0.0000	1.0000	0.0000	0.0000 *
Master Comp Mole Frac (Hydrogen)	0.0781	0.0778	0.0000	0.6210	0.0000 *
Master Comp Mole Frac (CO)	0.0218	0.0222	0.0000	0.1774	0.0000 *
Master Comp Mole Frac (CO2)	0.2016	0.2012	0.0000	0.0460	0.0000 *
Master Comp Mole Frac (Methanol)	0.0000	0.0000	0.0000	0.0000	0.0000 *
Master Comp Mole Frac (diM-Ether)	0.0000	0.0000	0.0000	0.0000	0.0000 *
Master Comp Mole Frac (1-Propanol)	0.0000	0.0000	0.0000	0.0000	0.0000 *

Name	CO2-IN	4	5	6	7
Master Comp Mole Frac (H2O)	0.0000 *	0.6988	0.6988	0.1556	0.1556
Master Comp Mole Frac (Oxygen)	0.0000 *	0.0000	0.0000	0.0000	0.0000
Master Comp Mole Frac (Hydrogen)	0.0000 *	0.0778	0.0778	0.6210	0.6210
Master Comp Mole Frac (CO)	0.0000 *	0.0222	0.0222	0.1774	0.1774
Master Comp Mole Frac (CO2)	1.0000 *	0.2012	0.2012	0.0460	0.0460
Master Comp Mole Frac (Methanol)	0.0000 *	0.0000	0.0000	0.0000	0.0000
Master Comp Mole Frac (diM-Ether)	0.0000 *	0.0000	0.0000	0.0000	0.0000
Master Comp Mole Frac (1-Propanol)	0.0000 *	0.0000	0.0000	0.0000	0.0000

Name	10	SYNG	13	14	SYNG-RCY
Master Comp Mole Frac (H2O)	0.1556	0.0260	0.9999	0.9999	0.5624
Master Comp Mole Frac (Oxygen)	0.0000	0.0000	0.0000	0.0000	0.0000
Master Comp Mole Frac (Hydrogen)	0.6210	0.7163	0.0001	0.0001	0.3218
Master Comp Mole Frac (CO)	0.1774	0.2047	0.0000	0.0000	0.0919
Master Comp Mole Frac (CO2)	0.0460	0.0530	0.0000	0.0000	0.0238
Master Comp Mole Frac (Methanol)	0.0000	0.0000	0.0000	0.0000	0.0000
Master Comp Mole Frac (diM-Ether)	0.0000	0.0000	0.0000	0.0000	0.0000
Master Comp Mole Frac (1-Propanol)	0.0000	0.0000	0.0000	0.0000	0.0000

Workbook: Case (Main) (continued)

Composition (continued)

Fluid Pkg: All

Name	O2-OUT	18	17	11	19
Master Comp Mole Frac (H2O)	0.0000	0.6988	0.6988 *	0.1556	0.0260
Master Comp Mole Frac (Oxygen)	1.0000	0.0000	0.0000 *	0.0000	0.0000
Master Comp Mole Frac (Hydrogen)	0.0000	0.0778	0.0778 *	0.6210	0.7163
Master Comp Mole Frac (CO)	0.0000	0.0222	0.0222 *	0.1774	0.2047
Master Comp Mole Frac (CO2)	0.0000	0.2012	0.2012 *	0.0460	0.0530
Master Comp Mole Frac (Methanol)	0.0000	0.0000	0.0000 *	0.0000	0.0000
Master Comp Mole Frac (diM-Ether)	0.0000	0.0000	0.0000 *	0.0000	0.0000
Master Comp Mole Frac (1-Propanol)	0.0000	0.0000	0.0000 *	0.0000	0.0000

Name	20	WATER-OUT	CO2-OUT	Hydrogen	O2-IN-1
Master Comp Mole Frac (H2O)	0.0260	0.9994	0.0259	0.0000	0.0000 *
Master Comp Mole Frac (Oxygen)	0.0000	0.0000	0.0002	0.0000	1.0000 *
Master Comp Mole Frac (Hydrogen)	0.7163	0.0000	0.0000	0.9999	0.0000 *
Master Comp Mole Frac (CO)	0.2047	0.0000	0.0000	0.0001	0.0000 *
Master Comp Mole Frac (CO2)	0.0530	0.0006	0.9739	0.0000	0.0000 *
Master Comp Mole Frac (Methanol)	0.0000	0.0000	0.0000	0.0000	0.0000 *
Master Comp Mole Frac (diM-Ether)	0.0000	0.0000	0.0000	0.0000	0.0000 *
Master Comp Mole Frac (1-Propanol)	0.0000	0.0000	0.0000	0.0000	0.0000 *

Name	Purge gas	29	COMB-PROD-2	O2-IN-2	29-2
Master Comp Mole Frac (H2O)	0.0665	0.3411	0.3411	0.0000 *	0.9999
Master Comp Mole Frac (Oxygen)	0.0000	0.0001	0.0001	1.0000 *	0.0000
Master Comp Mole Frac (Hydrogen)	0.2747	0.0000	0.0000	0.0000 *	0.0000
Master Comp Mole Frac (CO)	0.5232	0.0000	0.0000	0.0000 *	0.0000
Master Comp Mole Frac (CO2)	0.1356	0.6588	0.6588	0.0000 *	0.0001
Master Comp Mole Frac (Methanol)	0.0000	0.0000	0.0000	0.0000 *	0.0000
Master Comp Mole Frac (diM-Ether)	0.0000	0.0000	0.0000	0.0000 *	0.0000
Master Comp Mole Frac (1-Propanol)	0.0000	0.0000	0.0000	0.0000 *	0.0000

Name	COMB-PROD-2-2	1
Master Comp Mole Frac (H2O)	0.9999	0.0260
Master Comp Mole Frac (Oxygen)	0.0000	0.0000
Master Comp Mole Frac (Hydrogen)	0.0000	0.7163
Master Comp Mole Frac (CO)	0.0000	0.2047
Master Comp Mole Frac (CO2)	0.0001	0.0530
Master Comp Mole Frac (Methanol)	0.0000	0.0000
Master Comp Mole Frac (diM-Ether)	0.0000	0.0000
Master Comp Mole Frac (1-Propanol)	0.0000	0.0000

Unit Ops

Operation Name	Operation Type	Feeds	Products	Ignored	Calc Level
Syngas Circulator	Compressor	6 Circ Pwr	10	No	500.0 *
SG CMP STG1	Compressor	SYNG ST1 PWR	19	No	500.0 *
SG CMP STG2	Compressor	20 ST2 PWR	1	No	500.0 *
M1	Mixer	WATER-IN CO2-IN SYNG-RCY	8	No	500.0 *
M2	Mixer	14 10	SYNG-RCY	No	500.0 *
Hi Temp Recup	LNG	H2,CO,H2O Out 5	25 4	No	500.0 *

Workbook: Case (Main) (continued)

Unit Ops (continued)

Operation Name	Operation Type	Feeds	Products	Ignored	Calc Level
Hi Temp Recup	LNG	Hot O2	Warm O2	No	500.0 *
Lo Temp Recup	LNG	25 17 Warm O2	11 18 O2-OUT	No	500.0 *
RWGS 1	Equilibrium Reactor	9	400 CO2, Water In	No	500.0 *
COMBUSTOR 1	Conversion Reactor	O2-IN-1 Purge gas COMB1-Q	29 COMB-PROD-2 COMB1-Q	No	500.0 *
COMBUSTOR 2	Conversion Reactor	O2-IN-2 Hydrogen COMB-Q-2-2	29-2 COMB-PROD-2-2 COMB-Q-2-2	No	500.0 *
Water Knockout Tank	Separator	7 Amb Q	13 SYNG Amb Q	No	500.0 *
KO-DRM 2	Separator	COMB-PROD-2 COMB-PROD-2-2 AMB-Q-1	WATER-OUT CO2-OUT AMB-Q-1	No	500.0 *
INT CLR 1	Cooler	19	20 IC1 Q	No	500.0 *
RCY-4	Recycle	8	17	No	3500 *
T1	Tee	11	6 7	No	500.0 *
High Temperature Co-Electrol	Standard Sub-Flowsheet	Sweep Gas In CO2, Water In Process Heat Electrolysis Power	Hot O2 H2,CO,H2O Out	No	2500 *
Topping Heat	Heater	4 Top Heat Q	9	No	500.0 *
Preheater	Heater	18 Preheat Q	5	No	500.0 *
SPRDSHT-1	Spreadsheet			No	500.0 *
PSA Calcs	Spreadsheet			No	500.0 *
Water Pump	Pump	13 Water Pump Pwr	14	No	500.0 *
PSA	Component Splitter	1 PSA Power PSA heat	Hydrogen Purge gas	No	500.0 *
SET-1	Set			No	500.0 *
ADJ-1	Adjust			No	3500 *
ADJ-2	Adjust			Yes	3500 *

Honeywell	Company Name Not Available Calgary, Alberta CANADA	Case Name: \\vmware-host\...\PSA Results\Coelec w syngas and PSA ratio 3_5.usc Unit Set: NASA Date/Time: Wednesday Feb 16 2011, 10:40:20

Workbook: High Temperature Co-Electrolysis (TPL2)

Streams

Fluid Pkg: All

Name		Sweep Gas In @TPL2	O2 Out @TPL2	Gas Products @TPL2	Liquid @TPL2	Anode @TPL2
Vapour Fraction		1.0000	1.0000	1.0000	0.0000	1.0000
Temperature	(C)	800.3	800.0	800.0 *	800.0	800.0
Pressure	(kPa)	135.1	135.1	136.5	136.5	135.1
Molar Flow	(gmole/h)	1.000e-010	1.692	6.536	0.0000	1.692
Mass Flow	(kg/d)	4.357e-011	1.299	2.584	0.0000	1.299
Liquid Volume Flow	(m3/h)	1.815e-015	4.758e-005	2.119e-004	0.0000	4.758e-005
Heat Flow	(kW)	-5.841e-012	1.186e-002	-6.355e-002	-0.0000	1.186e-002
Molar Enthalpy	(kJ/kgmole)	-2.103e+005	2.525e+004	-3.500e+004	-3.501e+004	2.525e+004
Name		H2,CO,H2O Out @TP	Cathode @TPL2	2 @TPL2	CO2, Water In @TPL2	Electrolysis Heatiing @
Vapour Fraction		1.0000	1.0000	0.0000	1.0000	---
Temperature	(C)	800.0 *	800.0 *	800.0	800.3	---
Pressure	(kPa)	135.1	135.1	135.1	137.9	---
Molar Flow	(gmole/h)	4.844	4.844	0.0000	4.844	---
Mass Flow	(kg/d)	1.285	1.285	0.0000	2.584	---
Liquid Volume Flow	(m3/h)	1.424e-004	1.643e-004	0.0000	1.278e-004	---
Heat Flow	(kW)	-6.813e-002	-7.541e-002	-0.0000	-0.2968	0.2332
Molar Enthalpy	(kJ/kgmole)	-5.064e+004	-5.604e+004	-5.064e+004	-2.206e+005	---
Name		Process Heat @TPL2	Shift Reactor 2 Heat @	Electrolysis Power @T		
Vapour Fraction		---	---	---		
Temperature	(C)	---	---	---		
Pressure	(kPa)	---	---	---		
Molar Flow	(gmole/h)	---	---	---		
Mass Flow	(kg/d)	---	---	---		
Liquid Volume Flow	(m3/h)	---	---	---		
Heat Flow	(kW)	1.762e-010	7.277e-003	0.2405		
Molar Enthalpy	(kJ/kgmole)	---	---	---		

Composition

Fluid Pkg: All

Name	Sweep Gas In @TPL2	O2 Out @TPL2	Gas Products @TPL2	Liquid @TPL2	Anode @TPL2
Comp Mole Frac (H2O)	0.9900	0.0000	0.0000	0.0000	0.0000
Comp Mole Frac (Oxygen)	0.0100	1.0000	0.2588	0.2588	1.0000
Comp Mole Frac (Hydrogen)	0.0000	0.0000	0.5756	0.5756	0.0000
Comp Mole Frac (CO)	0.0000	0.0000	0.0162	0.0162	0.0000
Comp Mole Frac (CO2)	0.0000	0.0000	0.1494	0.1494	0.0000
Comp Mole Frac (Methanol)	0.0000	0.0000	0.0000	0.0000	0.0000
Comp Mole Frac (diM-Ether)	0.0000	0.0000	0.0000	0.0000	0.0000
Comp Mole Frac (1-Propanol)	0.0000	0.0000	0.0000	0.0000	0.0000
Name	H2,CO,H2O Out @TP	Cathode @TPL2	2 @TPL2	CO2, Water In @TPL2	
Comp Mole Frac (H2O)	0.1556	0.0000	0.1556	0.6984	
Comp Mole Frac (Oxygen)	0.0000	0.0000	0.0000	0.0000	
Comp Mole Frac (Hydrogen)	0.6210	0.7766	0.6210	0.0781	
Comp Mole Frac (CO)	0.1774	0.0218	0.1774	0.0218	
Comp Mole Frac (CO2)	0.0460	0.2016	0.0460	0.2016	
Comp Mole Frac (Methanol)	0.0000	0.0000	0.0000	0.0000	
Comp Mole Frac (diM-Ether)	0.0000	0.0000	0.0000	0.0000	
Comp Mole Frac (1-Propanol)	0.0000	0.0000	0.0000	0.0000	

Unit Ops

Operation Name	Operation Type	Feeds	Products	Ignored	Calc Level
Temp Average ASR @TPL2	Spreadsheet			Yes	500.0 *
Electrolysis Spreadsheet @TF	Spreadsheet			No	500.0 *

Workbook: High Temperature Co-Electrolysis (TPL2) (continued)

Unit Ops (continued)

Operation Name	Operation Type	Feeds	Products	Ignored	Calc Level
Steam Electrolysis @TPL2	Spreadsheet			No	500.0 *
CO2 Electrolysis @TPL2	Spreadsheet			No	500.0 *
Sweep Gas/O2 Mixer @TPL2	Mixer	Anode @TPL2	O2 Out @TPL2	No	500.0 *
		Sweep Gas In @TPL2			
Isothermal Electrolysis @TPL2	Conversion Reactor	CO2, Water In @TPL2	Liquid @TPL2	No	500.0 *
		Electrolysis Heatiing @TPL2	Gas Products @TPL2		
			Electrolysis Heatiing @TPL2		
Electrodes @TPL2	Component Splitter	Gas Products @TPL2	Cathode @TPL2	No	500.0 *
			Anode @TPL2		
ADJ-1 @TPL2	Adjust			No	3500 *
ERV-100 @TPL2	Equilibrium Reactor	Cathode @TPL2	2 @TPL2	No	500.0 *
		Shift Reactor 2 Heat @TPL2	H2,CO,H2O Out @TPL2		
			Shift Reactor 2 Heat @TPL2		
SET-1 @TPL2	Set			No	500.0 *
SET-3 @TPL2	Set			No	500.0 *
SET-2 @TPL2	Set			No	500.0 *

Honeywell	Company Name Not Available Calgary, Alberta CANADA	Case Name: \\vmware-host\...\PSA Results\Coelec w syngas and PSA ratio 4.usc Unit Set: NASA Date/Time: Wednesday Feb 16 2011, 10:43:06

Workbook: Case (Main)

Streams

Fluid Pkg: All

Name		CO2, Water In	H2,CO,H2O Out	9	Sweep Gas In	Hot O2
Vapour Fraction		1.0000	1.0000	1.0000	1.0000	1.0000
Temperature	(C)	800.3	800.0	800.0 *	800.3	800.0
Pressure	(kPa)	137.9	135.1	137.9	135.1	135.1
Molar Flow	(gmole/h)	5.366	5.366	5.366	1.000e-010 *	1.928
Mass Flow	(kg/d)	2.787	1.306	2.787	4.357e-011	1.481
Std Ideal Liq Vol Flow	(m3/h)	1.376e-004	1.568e-004	1.376e-004	1.815e-015	5.424e-005
Heat Flow	(kW)	-0.3241	-6.426e-002	-0.3241	-5.842e-012	1.352e-002
Molar Enthalpy	(kJ/kgmole)	-2.174e+005	-4.311e+004	-2.174e+005	-2.103e+005	2.525e+004
Name		400	8	Warm O2	25	WATER-IN
Vapour Fraction		0.0000	0.2912	1.0000	1.0000	0.0000
Temperature	(C)	800.3	32.48	123.9	192.6	21.00 *
Pressure	(kPa)	137.9	137.9	135.1	135.1	137.9
Molar Flow	(gmole/h)	0.0000	5.366	1.928	5.366	3.193
Mass Flow	(kg/d)	0.0000	2.787	1.481	1.306	1.381 *
Std Ideal Liq Vol Flow	(m3/h)	0.0000	1.376e-004	5.424e-005	1.568e-004	5.764e-005
Heat Flow	(kW)	-0.0000	-0.4146	1.568e-003	-9.331e-002	-0.2538
Molar Enthalpy	(kJ/kgmole)	-2.174e+005	-2.781e+005	2927	-6.260e+004	-2.862e+005
Name		CO2-IN	4	5	6	7
Vapour Fraction		1.0000	1.0000	0.9731	1.0000	1.0000
Temperature	(C)	21.00 *	775.0 *	99.00 *	124.0 *	124.0
Pressure	(kPa)	137.9 *	137.9	137.9	135.1	135.1
Molar Flow	(gmole/h)	0.9468	5.366	5.366	0.6552	4.711
Mass Flow	(kg/d)	1.000 *	2.787	2.787	0.1595	1.147
Std Ideal Liq Vol Flow	(m3/h)	5.048e-005	1.376e-004	1.376e-004	1.915e-005	1.377e-004
Heat Flow	(kW)	-0.1036	-0.3257	-0.3667	-1.177e-002	-8.463e-002
Molar Enthalpy	(kJ/kgmole)	-3.940e+005	-2.185e+005	-2.460e+005	-6.467e+004	-6.467e+004
Name		10	SYNG	13	14	SYNG-RCY
Vapour Fraction		1.0000	1.0000	0.0000	0.0000	0.5323
Temperature	(C)	127.0	26.67 *	26.67	26.67	59.36
Pressure	(kPa)	137.9	135.1	135.1	137.9	137.9
Molar Flow	(gmole/h)	0.6552	4.140	0.5713	0.5713	1.227
Mass Flow	(kg/d)	0.1595	0.8996	0.2470	0.2470	0.4065
Std Ideal Liq Vol Flow	(m3/h)	1.915e-005	1.274e-004	1.031e-005	1.031e-005	2.946e-005
Heat Flow	(kW)	-1.175e-002	-5.006e-002	-4.535e-002	-4.535e-002	-5.710e-002
Molar Enthalpy	(kJ/kgmole)	-6.458e+004	-4.353e+004	-2.858e+005	-2.858e+005	-1.676e+005
Name		O2-OUT	18	17	11	19
Vapour Fraction		1.0000	0.3205	0.2912	1.0000	1.0000
Temperature	(C)	57.48	56.43	32.48 *	124.0	176.7 *
Pressure	(kPa)	135.1	137.9	137.9 *	135.1	416.2
Molar Flow	(gmole/h)	1.928	5.366	5.366 *	5.366	4.140
Mass Flow	(kg/d)	1.481	2.787	2.787	1.306	0.8996
Std Ideal Liq Vol Flow	(m3/h)	5.424e-005	1.376e-004	1.376e-004	1.568e-004	1.274e-004
Heat Flow	(kW)	5.047e-004	-0.4104	-0.4146	-9.640e-002	-4.499e-002
Molar Enthalpy	(kJ/kgmole)	942.2	-2.753e+005	-2.781e+005	-6.467e+004	-3.913e+004

Workbook: Case (Main) (continued)

Streams (continued)

Fluid Pkg: All

Name		20	WATER-OUT	CO2-OUT	Hydrogen	O2-IN-1
Vapour Fraction		1.0000	0.0000	1.0000	1.0000	1.0000
Temperature	(C)	54.44 *	26.67	26.67 *	121.7 *	26.67 *
Pressure	(kPa)	416.2	137.9	137.9	620.5	137.9 *
Molar Flow	(gmole/h)	4.140	3.170	0.9711	2.623	0.6169
Mass Flow	(kg/d)	0.8996	1.372	1.010	0.1271	0.4738 *
Std Ideal Liq Vol Flow	(m3/h)	1.274e-004	5.729e-005	5.086e-005	7.569e-005	1.735e-005
Heat Flow	(kW)	-4.914e-002	-0.2517	-0.1050	2.006e-003	6.155e-006
Molar Enthalpy	(kJ/kgmole)	-4.273e+004	-2.858e+005	-3.894e+005	2754	35.92

Name		Purge gas	29	COMB-PROD-2	O2-IN-2	29-2
Vapour Fraction		1.0000	0.0000	1.0000	1.0000	0.0000
Temperature	(C)	121.7	1000	1000 *	26.67 *	1000
Pressure	(kPa)	172.4 *	137.9	137.9	137.9 *	137.9
Molar Flow	(gmole/h)	1.517	0.0000	1.517	1.313	0.0000
Mass Flow	(kg/d)	0.7726	0.0000	1.246	1.008 *	0.0000
Std Ideal Liq Vol Flow	(m3/h)	5.167e-005	0.0000	6.077e-005	3.692e-005	0.0000
Heat Flow	(kW)	-4.887e-002	-0.0000	-0.1232	1.310e-005	-0.0000
Molar Enthalpy	(kJ/kgmole)	-1.160e+005	-2.924e+005	-2.924e+005	35.92	-2.040e+005

Name		COMB-PROD-2-2	1	Electrolysis Power	Process Heat	Top Heat Q
Vapour Fraction		1.0000	1.0000	---	---	---
Temperature	(C)	1000 *	121.7	---	---	---
Pressure	(kPa)	137.9	689.5 *	---	---	---
Molar Flow	(gmole/h)	2.624	4.140	---	---	---
Mass Flow	(kg/d)	1.135	0.8996	---	---	---
Std Ideal Liq Vol Flow	(m3/h)	4.739e-005	1.274e-004	---	---	---
Heat Flow	(kW)	-0.1487	-4.687e-002	0.2733	2.376e-010	1.609e-003
Molar Enthalpy	(kJ/kgmole)	-2.040e+005	-4.076e+004	---	---	---

Name		Preheat Q	Circ Pwr	Amb Q	Water Pump Pwr	ST1 PWR
Vapour Fraction		---	---	---	---	---
Temperature	(C)	---	---	---	---	---
Pressure	(kPa)	---	---	---	---	---
Molar Flow	(gmole/h)	---	---	---	---	---
Mass Flow	(kg/d)	---	---	---	---	---
Std Ideal Liq Vol Flow	(m3/h)	---	---	---	---	---
Heat Flow	(kW)	4.375e-002	1.624e-005	-1.078e-002	1.045e-008	5.069e-003
Molar Enthalpy	(kJ/kgmole)	---	---	---	---	---

Name		IC1 Q	ST2 PWR	AMB-Q-1	PSA Power	PSA heat
Vapour Fraction		---	---	---	---	---
Temperature	(C)	---	---	---	---	---
Pressure	(kPa)	---	---	---	---	---
Molar Flow	(gmole/h)	---	---	---	---	---
Mass Flow	(kg/d)	---	---	---	---	---
Std Ideal Liq Vol Flow	(m3/h)	---	---	---	---	---
Heat Flow	(kW)	4.147e-003	2.269e-003	-8.485e-002	8.997e-006	8.695e-013
Molar Enthalpy	(kJ/kgmole)	---	---	---	---	---

Workbook: Case (Main) (continued)

Streams (continued)

Fluid Pkg: All

Name		COMB1-Q	COMB-Q-2-2			
Vapour Fraction		---	---			
Temperature	(C)	---	---			
Pressure	(kPa)	---	---			
Molar Flow	(gmole/h)	---	---			
Mass Flow	(kg/d)	---	---			
Std Ideal Liq Vol Flow	(m3/h)	---	---			
Heat Flow	(kW)	-7.433e-002	-0.1507			
Molar Enthalpy	(kJ/kgmole)	---	---			

Composition

Fluid Pkg: All

Name	CO2, Water In	H2,CO,H2O Out	9	Sweep Gas In	Hot O2
Master Comp Mole Frac (H2O)	0.7187	0.1441	0.7191	0.9900 *	0.0000
Master Comp Mole Frac (Oxygen)	0.0000	0.0000	0.0000	0.0100 *	1.0000
Master Comp Mole Frac (Hydrogen)	0.0803	0.6549	0.0800	0.0000 *	0.0000
Master Comp Mole Frac (CO)	0.0196	0.1637	0.0200	0.0000 *	0.0000
Master Comp Mole Frac (CO2)	0.1814	0.0373	0.1810	0.0000 *	0.0000
Master Comp Mole Frac (Methanol)	0.0000	0.0000	0.0000	0.0000 *	0.0000
Master Comp Mole Frac (diM-Ether)	0.0000	0.0000	0.0000	0.0000 *	0.0000
Master Comp Mole Frac (1-Propanol)	0.0000	0.0000	0.0000	0.0000 *	0.0000

Name	400	8	Warm O2	25	WATER-IN
Master Comp Mole Frac (H2O)	0.7187	0.7191	0.0000	0.1441	1.0000 *
Master Comp Mole Frac (Oxygen)	0.0000	0.0000	1.0000	0.0000	0.0000 *
Master Comp Mole Frac (Hydrogen)	0.0803	0.0800	0.0000	0.6549	0.0000 *
Master Comp Mole Frac (CO)	0.0196	0.0200	0.0000	0.1637	0.0000 *
Master Comp Mole Frac (CO2)	0.1814	0.1810	0.0000	0.0373	0.0000 *
Master Comp Mole Frac (Methanol)	0.0000	0.0000	0.0000	0.0000	0.0000 *
Master Comp Mole Frac (diM-Ether)	0.0000	0.0000	0.0000	0.0000	0.0000 *
Master Comp Mole Frac (1-Propanol)	0.0000	0.0000	0.0000	0.0000	0.0000 *

Name	CO2-IN	4	5	6	7
Master Comp Mole Frac (H2O)	0.0000 *	0.7191	0.7191	0.1441	0.1441
Master Comp Mole Frac (Oxygen)	0.0000 *	0.0000	0.0000	0.0000	0.0000
Master Comp Mole Frac (Hydrogen)	0.0000 *	0.0800	0.0800	0.6549	0.6549
Master Comp Mole Frac (CO)	0.0000 *	0.0200	0.0200	0.1637	0.1637
Master Comp Mole Frac (CO2)	1.0000 *	0.1810	0.1810	0.0373	0.0373
Master Comp Mole Frac (Methanol)	0.0000 *	0.0000	0.0000	0.0000	0.0000
Master Comp Mole Frac (diM-Ether)	0.0000 *	0.0000	0.0000	0.0000	0.0000
Master Comp Mole Frac (1-Propanol)	0.0000 *	0.0000	0.0000	0.0000	0.0000

Name	10	SYNG	13	14	SYNG-RCY
Master Comp Mole Frac (H2O)	0.1441	0.0260	0.9999	0.9999	0.5427
Master Comp Mole Frac (Oxygen)	0.0000	0.0000	0.0000	0.0000	0.0000
Master Comp Mole Frac (Hydrogen)	0.6549	0.7453	0.0001	0.0001	0.3499
Master Comp Mole Frac (CO)	0.1637	0.1863	0.0000	0.0000	0.0875
Master Comp Mole Frac (CO2)	0.0373	0.0424	0.0000	0.0000	0.0199
Master Comp Mole Frac (Methanol)	0.0000	0.0000	0.0000	0.0000	0.0000
Master Comp Mole Frac (diM-Ether)	0.0000	0.0000	0.0000	0.0000	0.0000
Master Comp Mole Frac (1-Propanol)	0.0000	0.0000	0.0000	0.0000	0.0000

Workbook: Case (Main) (continued)

Composition (continued)

Fluid Pkg: All

Name	O2-OUT	18	17	11	19
Master Comp Mole Frac (H2O)	0.0000	0.7191	0.7191 *	0.1441	0.0260
Master Comp Mole Frac (Oxygen)	1.0000	0.0000	0.0000 *	0.0000	0.0000
Master Comp Mole Frac (Hydrogen)	0.0000	0.0800	0.0800 *	0.6549	0.7453
Master Comp Mole Frac (CO)	0.0000	0.0200	0.0200 *	0.1637	0.1863
Master Comp Mole Frac (CO2)	0.0000	0.1810	0.1810 *	0.0373	0.0424
Master Comp Mole Frac (Methanol)	0.0000	0.0000	0.0000 *	0.0000	0.0000
Master Comp Mole Frac (diM-Ether)	0.0000	0.0000	0.0000 *	0.0000	0.0000
Master Comp Mole Frac (1-Propanol)	0.0000	0.0000	0.0000 *	0.0000	0.0000

Name	20	WATER-OUT	CO2-OUT	Hydrogen	O2-IN-1
Master Comp Mole Frac (H2O)	0.0260	0.9994	0.0259	0.0000	0.0000 *
Master Comp Mole Frac (Oxygen)	0.0000	0.0000	0.0012	0.0000	1.0000 *
Master Comp Mole Frac (Hydrogen)	0.7453	0.0000	0.0000	0.9999	0.0000 *
Master Comp Mole Frac (CO)	0.1863	0.0000	0.0000	0.0001	0.0000 *
Master Comp Mole Frac (CO2)	0.0424	0.0006	0.9729	0.0000	0.0000 *
Master Comp Mole Frac (Methanol)	0.0000	0.0000	0.0000	0.0000	0.0000 *
Master Comp Mole Frac (diM-Ether)	0.0000	0.0000	0.0000	0.0000	0.0000 *
Master Comp Mole Frac (1-Propanol)	0.0000	0.0000	0.0000	0.0000	0.0000 *

Name	Purge gas	29	COMB-PROD-2	O2-IN-2	29-2
Master Comp Mole Frac (H2O)	0.0709	0.3760	0.3760	0.0000 *	0.9995
Master Comp Mole Frac (Oxygen)	0.0000	0.0000	0.0000	1.0000 *	0.0004
Master Comp Mole Frac (Hydrogen)	0.3051	0.0000	0.0000	0.0000 *	0.0000
Master Comp Mole Frac (CO)	0.5083	0.0000	0.0000	0.0000 *	0.0000
Master Comp Mole Frac (CO2)	0.1157	0.6240	0.6240	0.0000 *	0.0001
Master Comp Mole Frac (Methanol)	0.0000	0.0000	0.0000	0.0000 *	0.0000
Master Comp Mole Frac (diM-Ether)	0.0000	0.0000	0.0000	0.0000 *	0.0000
Master Comp Mole Frac (1-Propanol)	0.0000	0.0000	0.0000	0.0000 *	0.0000

Name	COMB-PROD-2-2	1
Master Comp Mole Frac (H2O)	0.9995	0.0260
Master Comp Mole Frac (Oxygen)	0.0004	0.0000
Master Comp Mole Frac (Hydrogen)	0.0000	0.7453
Master Comp Mole Frac (CO)	0.0000	0.1863
Master Comp Mole Frac (CO2)	0.0001	0.0424
Master Comp Mole Frac (Methanol)	0.0000	0.0000
Master Comp Mole Frac (diM-Ether)	0.0000	0.0000
Master Comp Mole Frac (1-Propanol)	0.0000	0.0000

Unit Ops

Operation Name	Operation Type	Feeds	Products	Ignored	Calc Level
Syngas Circulator	Compressor	6	10	No	500.0 *
		Circ Pwr			
SG CMP STG1	Compressor	SYNG	19	No	500.0 *
		ST1 PWR			
SG CMP STG2	Compressor	20	1	No	500.0 *
		ST2 PWR			
M1	Mixer	WATER-IN	8	No	500.0 *
		CO2-IN			
		SYNG-RCY			
M2	Mixer	14	SYNG-RCY	No	500.0 *
		10			
Hi Temp Recup	LNG	H2,CO,H2O Out	25	No	500.0 *
		5	4		

Workbook: Case (Main) (continued)

Unit Ops (continued)

Operation Name	Operation Type	Feeds	Products	Ignored	Calc Level
Hi Temp Recup	LNG	Hot O2	Warm O2	No	500.0 *
Lo Temp Recup	LNG	25 17 Warm O2	11 18 O2-OUT	No	500.0 *
RWGS 1	Equilibrium Reactor	9	400 CO2, Water In	No	500.0 *
COMBUSTOR 1	Conversion Reactor	O2-IN-1 Purge gas COMB1-Q	29 COMB-PROD-2 COMB1-Q	No	500.0 *
COMBUSTOR 2	Conversion Reactor	O2-IN-2 Hydrogen COMB-Q-2-2	29-2 COMB-PROD-2-2 COMB-Q-2-2	No	500.0 *
Water Knockout Tank	Separator	7 Amb Q	13 SYNG Amb Q	No	500.0 *
KO-DRM 2	Separator	COMB-PROD-2 COMB-PROD-2-2 AMB-Q-1	WATER-OUT CO2-OUT AMB-Q-1	No	500.0 *
INT CLR 1	Cooler	19	20 IC1 Q	No	500.0 *
RCY-4	Recycle	8	17	No	3500 *
T1	Tee	11	6 7	No	500.0 *
High Temperature Co-Electrol	Standard Sub-Flowsheet	Sweep Gas In CO2, Water In Process Heat Electrolysis Power	Hot O2 H2,CO,H2O Out	No	2500 *
Topping Heat	Heater	4 Top Heat Q	9	No	500.0 *
Preheater	Heater	18 Preheat Q	5	No	500.0 *
SPRDSHT-1	Spreadsheet			No	500.0 *
PSA Calcs	Spreadsheet			No	500.0 *
Water Pump	Pump	13 Water Pump Pwr	14	No	500.0 *
PSA	Component Splitter	1 PSA Power PSA heat	Hydrogen Purge gas	No	500.0 *
SET-1	Set			No	500.0 *
ADJ-1	Adjust			No	3500 *
ADJ-2	Adjust			Yes	3500 *

Honeywell	Company Name Not Available Calgary, Alberta CANADA	Case Name: \\vmware-host\...\PSA Results\Coelec w syngas and PSA ratio 4.usc Unit Set: NASA Date/Time: Wednesday Feb 16 2011, 10:43:06

Workbook: High Temperature Co-Electrolysis (TPL2)

Streams

Fluid Pkg: All

Name		Sweep Gas In @TPL2	O2 Out @TPL2	Gas Products @TPL2	Liquid @TPL2	Anode @TPL2
Vapour Fraction		1.0000	1.0000	1.0000	0.0000	1.0000
Temperature	(C)	800.3	800.0	800.0 *	800.0	800.0
Pressure	(kPa)	135.1	135.1	136.5	136.5	135.1
Molar Flow	(gmole/h)	1.000e-010	1.928	7.294	0.0000	1.928
Mass Flow	(kg/d)	4.357e-011	1.481	2.787	0.0000	1.481
Liquid Volume Flow	(m3/h)	1.815e-015	5.424e-005	2.336e-004	0.0000	5.424e-005
Heat Flow	(kW)	-5.842e-012	1.352e-002	-5.820e-002	-0.0000	1.352e-002
Molar Enthalpy	(kJ/kgmole)	-2.103e+005	2.525e+004	-2.872e+004	-2.873e+004	2.525e+004
Name		H2,CO,H2O Out @TP	Cathode @TPL2	2 @TPL2	CO2, Water In @TPL2	Electrolysis Heatiing @
Vapour Fraction		1.0000	1.0000	0.0000	1.0000	---
Temperature	(C)	800.0 *	800.0 *	800.0	800.3	---
Pressure	(kPa)	135.1	135.1	135.1	137.9	---
Molar Flow	(gmole/h)	5.366	5.366	0.0000	5.366	---
Mass Flow	(kg/d)	1.306	1.306	0.0000	2.787	---
Liquid Volume Flow	(m3/h)	1.568e-004	1.793e-004	0.0000	1.376e-004	---
Heat Flow	(kW)	-6.426e-002	-7.173e-002	-0.0000	-0.3241	0.2659
Molar Enthalpy	(kJ/kgmole)	-4.311e+004	-4.812e+004	-4.311e+004	-2.174e+005	---
Name		Process Heat @TPL2	Shift Reactor 2 Heat @	Electrolysis Power @T		
Vapour Fraction		---	---	---		
Temperature	(C)	---	---	---		
Pressure	(kPa)	---	---	---		
Molar Flow	(gmole/h)	---	---	---		
Mass Flow	(kg/d)	---	---	---		
Liquid Volume Flow	(m3/h)	---	---	---		
Heat Flow	(kW)	2.376e-010	7.466e-003	0.2733		
Molar Enthalpy	(kJ/kgmole)	---	---	---		

Composition

Fluid Pkg: All

Name	Sweep Gas In @TPL2	O2 Out @TPL2	Gas Products @TPL2	Liquid @TPL2	Anode @TPL2
Comp Mole Frac (H2O)	0.9900	0.0000	0.0000	0.0000	0.0000
Comp Mole Frac (Oxygen)	0.0100	1.0000	0.2643	0.2643	1.0000
Comp Mole Frac (Hydrogen)	0.0000	0.0000	0.5878	0.5878	0.0000
Comp Mole Frac (CO)	0.0000	0.0000	0.0144	0.0144	0.0000
Comp Mole Frac (CO2)	0.0000	0.0000	0.1334	0.1334	0.0000
Comp Mole Frac (Methanol)	0.0000	0.0000	0.0000	0.0000	0.0000
Comp Mole Frac (diM-Ether)	0.0000	0.0000	0.0000	0.0000	0.0000
Comp Mole Frac (1-Propanol)	0.0000	0.0000	0.0000	0.0000	0.0000
Name	H2,CO,H2O Out @TP	Cathode @TPL2	2 @TPL2	CO2, Water In @TPL2	
Comp Mole Frac (H2O)	0.1441	0.0000	0.1441	0.7187	
Comp Mole Frac (Oxygen)	0.0000	0.0000	0.0000	0.0000	
Comp Mole Frac (Hydrogen)	0.6549	0.7990	0.6549	0.0803	
Comp Mole Frac (CO)	0.1637	0.0196	0.1637	0.0196	
Comp Mole Frac (CO2)	0.0373	0.1814	0.0373	0.1814	
Comp Mole Frac (Methanol)	0.0000	0.0000	0.0000	0.0000	
Comp Mole Frac (diM-Ether)	0.0000	0.0000	0.0000	0.0000	
Comp Mole Frac (1-Propanol)	0.0000	0.0000	0.0000	0.0000	

Unit Ops

Operation Name	Operation Type	Feeds	Products	Ignored	Calc Level
Temp Average ASR @TPL2	Spreadsheet			Yes	500.0 *
Electrolysis Spreadsheet @TF	Spreadsheet			No	500.0 *

Workbook: High Temperature Co-Electrolysis (TPL2) (continued)

Unit Ops (continued)

Operation Name	Operation Type	Feeds	Products	Ignored	Calc Level
Steam Electrolysis @TPL2	Spreadsheet			No	500.0 *
CO2 Electrolysis @TPL2	Spreadsheet			No	500.0 *
Sweep Gas/O2 Mixer @TPL2	Mixer	Anode @TPL2	O2 Out @TPL2	No	500.0 *
		Sweep Gas In @TPL2			
Isothermal Electrolysis @TPL2	Conversion Reactor	CO2, Water In @TPL2	Liquid @TPL2	No	500.0 *
		Electrolysis Heatiing @TPL2	Gas Products @TPL2		
			Electrolysis Heatiing @TPL2		
Electrodes @TPL2	Component Splitter	Gas Products @TPL2	Cathode @TPL2	No	500.0 *
			Anode @TPL2		
ADJ-1 @TPL2	Adjust			No	3500 *
ERV-100 @TPL2	Equilibrium Reactor	Cathode @TPL2	2 @TPL2	No	500.0 *
		Shift Reactor 2 Heat @TPL2	H2,CO,H2O Out @TPL2		
			Shift Reactor 2 Heat @TPL2		
SET-1 @TPL2	Set			No	500.0 *
SET-3 @TPL2	Set			No	500.0 *
SET-2 @TPL2	Set			No	500.0 *