INL/RPT-22-69974

Preliminary Reversible Solid Oxide System Specification

December 2022

L. Todd Knighton, Amey Shigrekar, Courtney Otani, Micah Casteel, Dan Wendt, Tyler Westover
Idaho National Laboratory

Idaho National Laboratory

INL is a U.S. Department of Energy National Laboratory operated by Battelle Energy Alliance, LLC

DISCLAIMER

This information was prepared as an account of work sponsored by an agency of the U.S. Government. Neither the U.S. Government nor any agency thereof, nor any of their employees, makes any warranty, expressed or implied, or assumes any legal liability or responsibility for the accuracy, completeness, or usefulness, of any information, apparatus, product, or process disclosed, or represents that its use would not infringe privately owned rights. References herein to any specific commercial product, process, or service by trade name, trade mark, manufacturer, or otherwise, does not necessarily constitute or imply its endorsement, recommendation, or favoring by the U.S. Government or any agency thereof. The views and opinions of authors expressed herein do not necessarily state or reflect those of the U.S. Government or any agency thereof.

Preliminary Reversible Solid Oxide System Specification

L. Todd Knighton, Amey Shigrekar, Courtney Otani, Micah Casteel, Dan Wendt, Tyler Westover
Idaho National Laboratory

December 2022

Idaho National Laboratory
Idaho Falls, Idaho 83415

http://www.inl.gov

Prepared for the
U.S. Department of Energy
Office of Nuclear Energy
Under DOE Idaho Operations Office
Contract DE-AC07-05ID14517

Page intentionally left blank

EXECUTIVE SUMMARY

This report presents the preliminary documentation of a 10 MWe DC reversible solid oxide cell (rSOC) system designed to use both electrical and thermal energy from a nuclear power plant (NPP). The system is designed to consume 10 MWe DC in electrolysis mode while producing hydrogen from demineralized feedwater. In fuel cell mode, the same stacks produce 2.37 MWe DC of electricity by reacting hydrogen and oxygen, while generating water as a byproduct which is recycled to be used later in the electrolysis mode.

The system detailed in this specification is a high-temperature steam electrolysis (HTSE) system when operated in the electrolysis mode. HTSE systems have the benefit of producing hydrogen at a higher efficiency than conventional low-temperature electrolysis (LTE) systems. In this report it is assumed that some of the heat required for HTSE operation comes from an NPP. Heat extraction from an NPP for use in electrolysis mode of the rSOC system allows preheating and vaporization of feedwater before recuperators and trim heaters raise the feed temperature to the approximately 800 °C before entering the solid oxide stacks. The purpose of an rSOC system in a utility company setting is to employ energy arbitrage with a dispatchable demand load which can consume excess electricity generation during times of low grid demand / high generation and can produce electricity for the grid during times of high grid demand / low generation.

There is a wide range of energy storage technologies that could be used for utility-scale energy arbitrage (utility-scale battery storage is considered the baseline technology), the object of this work is not to compare and contrast rSOC technology with any of these other technologies, but only to present this preliminary design for consideration and for use in future conceptual or front end engineering design (FEED) work.

This document is not meant to be a final specification or definitive description of the rSOC system, but it is meant to showcase preliminary process modeling results, provide boundary conditions and interface requirements such as input feed and utility stream flowrates, temperatures, and pressures as well as thermal and electrical energy requirements, and output conditions in both electrolysis mode and fuel cell mode. These results are intended to inform the future development of a conceptual demonstration-scale study to assess the technical and economic feasibility of a future demonstration of an rSOC integrated project at an NPP.

Page intentionally left blank

CONTENTS

EXECUTIVE SUMMARY iii
ACRONYMS viii
1. INTRODUCTION AND PURPOSE 1
2. PROCESS MODELING 1
2.1 Overview of rSOC Systems 1
2.2 Model Overview Description 2
2.3 Electrolysis Cell Mode Model 2
2.4 Fuel Cell Mode Model 4
2.5 Efficiency Calculations 6
3. INTERFACE REQUIREMENTS 8
3.1 Utilities Summary 8
3.2 Consolidated rSOC System Interface Requirements 9
3.2.1 Startup and Shutdown Requirements 11
3.3 Conceptual Example Site Layout 12
4. SUMMARY 14
Appendix A EC Mode PFD 16
Appendix B EC Mode Heat and Material Balance Tables 17
Appendix C FC Mode PFD 25
Appendix D FC Mode H&M Tables 26

FIGURES

Figure 1. PFD for electrolysis operation, 10 MWe DC electricity consumed. Stream labels in diamonds match the stream labels in Figure 5 in the appendix 3
Figure 2. Fuel Cell operation, 2.37 MWe DC electricity produced. Stream labels in diamonds match the stream labels in Figure 6 in the appendix 5
Figure 3. Plant system interface summary of maximum interface requirements for the rSOC system operation, considering both modes of operation. Asterisks indicate assumed conditions that were specified in the model 10
Figure 4. Rough hypothetical plant plot for 10 MWe DC SOEC / 2.37 MWe DC SOFC rSOC plant showing approximately 12,000 ft^2 of space required for the rSOC system 13
Figure 5. Electrolysis operation, 10 MWe DC, PFD from Aspen HYSYS 16
Figure 6. Fuel Cell operation, 2.37 MWe DC, PFD from Aspen HYSYS 25

TABLES

Table 1. EC Mode input and output conditions..... 4
Table 2. EC Mode energy flows..... 4
Table 3. FC Mode input and output conditions..... 6
Table 4. FC Mode energy flows..... 6
Table 5 Electrolysis mode efficiency and energy consumption results..... 7
Table 6. Fuel Cell mode efficiency, energy production, and hydrogen consumption results.....8
Table 7. Utility requirements..... 9
Table 8. Process stream interface requirements.....11
Table 9. Electrical and thermal power interfaces requirements.....11

Page intentionally left blank

ACRONYMS

BoP	balance of plant
EC	electrolysis cell
FC	fuel cell
FEED	front end engineering design
H&M	heat and material
HTSE	high-temperature steam electrolysis
IBL	inside battery limit
LTE	low-temperature electrolysis
MW	megawatts
NPP	nuclear power plant
OBL	outside battery limit
PFD	process flow diagram
RFI	request for information
rSOC	reversible solid oxide cell
SOC	solid oxide cell
SOEC	solid oxide electrolysis cell
SOFC	solid oxide fuel cell
TCI	total capital investment

Page intentionally left blank

Preliminary Reversible Solid Oxide System Specification

1. INTRODUCTION AND PURPOSE

As the buildout of renewable electricity generation and drivers continue such as investment tax credits, decarbonization goals (in both the public and private sectors), and decreasing capital costs of renewables, more electricity market regions are increasingly seeing a mismatch in electricity generation and demand. This leads to an excess supply of electricity being available when renewables are actively generating power. Utility companies, governments, and research organizations are increasingly active in developing energy storage technologies that can be used in energy arbitrage to store energy when grid electricity demand is low, to be used later when grid electricity demand is high, and generation is low. One possible technology being developed is the reversible solid oxide cell (rSOC) system. It is essentially a high-temperature steam electrolysis (HTSE) system that can run in both forward mode (EC mode) and reverse mode (FC mode). The EC/FC stacks consist of many electrochemical cells combined into stacks. The same stacks are used in both EC and FC modes. The same balance of plant (BoP) equipment of the system including heat exchangers (heaters, coolers, recuperators, etc.), pumps, blowers, piping, feedwater storage, and feed, hydrogen purification and compression, etc. is mostly utilized for both operating modes. In EC mode demineralized feedwater is preheated to approximately 800 °C in various stages and reacted in the EC/FC stacks to produce hydrogen, whereas, in the FC mode, hydrogen with oxygen from feed air is consumed by the EC/FC stacks to produce electricity. The byproduct of the FC mode is water, which is recycled to be used in the EC mode as feedwater for steam production.

An rSOC system could be an alternative to conventional utility battery storage. The typical battery storage system is designed for a specified megawatts (MW) rating for up to 4 hours of capacity. To date, the 4-hour discharge duration has provided adequate grid capacity during the daily peak hours. However, forecasts suggest that longer daily storage durations may be needed in the future. Battery systems will need to be oversized to support these longer storage durations and the cost of expansion for 5, 6, or more hours may be economically disadvantageous. It may be possible, however, for an rSOC system to be advanced in scale more economically than batteries to provide for longer storage durations.

The objective of this report is to support efforts that integrate reversible high-temperature solid oxide electrolysis at a U.S. nuclear power plant (NPP) as an alternative to batteries or hydrogen combustion in a gas turbine to complete the storage cycle. To this end, a process model was developed based on a nominal 10 MWe rSOC system (in electrolysis mode) resulting in approximately 2.37 MWe of electricity generation capacity in fuel cell mode for integration with a supply of electricity and thermal energy derived from a pressurized water reactor (PWR) NPP secondary system. The results of this analysis provide the operating characteristics of the demonstration-scale system from which NPP system interface requirements are determined and presented for the conceptual integrated plant system design.

2. PROCESS MODELING

2.1 Overview of rSOC Systems

This design of a demonstration-scale system is an HTSE system when operated in electrolysis mode and a solid oxide fuel cell (SOFC) system when operated in reverse. HTSE systems have the benefit of producing hydrogen at a higher efficiency than conventional low-temperature electrolysis (LTE) systems. Similarly, high-temperature SOFC systems produce power from hydrogen at a higher efficiency than lower-temperature fuel cell systems. In this work, it is assumed that some of the input heat required for HTSE operation comes from a NPP. Heat extraction from the NPP allows preheating and vaporization of feedwater before recuperators and trim heaters raise the feed temperature to the approximately 800 °C before entering the solid oxide stacks.

2.2 Model Overview Description

A process model in Aspen HYSYS of the rSOC system has been developed to establish the interface requirements such as electric power, thermal energy input (steam flow, temperature, and pressure), process water requirements, and cooling requirements for a NPP integrated demonstration-scale rSOC project. The results can be used to support the development of a conceptual system site design included as part of a feasibility assessment for the placement of a nominal 10 MWe DC (in electrolysis mode) rSOC system. These materials and energy balance estimates can be used to inform the preliminary design of the integrated systems and utility supply necessary to integrate such a system with a nuclear power plant.

Aspen HYSYS is one of various industry standard process modeling software tools used for chemical plant process modeling. In general, process models are used to define reactions, flows, unit operations, and energy transfer in plant processes. Outputs from these process models can provide heat and material balances including stream and unit operation temperatures, flows, pressures, and energy flows. These models can also be used to perform initial equipment design and sizing to obtain a rough estimate of the capital and operating expenses of the process which can be combined with other assumptions of installation, operation, and other factors to estimate total capital investment (TCI). Capital and operating expenses were not estimated in this work.

For convenience in modeling, two process models are used to represent the single rSOC system. One model is designed to represent operation in EC mode ('forward mode') (Section 2.2) and another model is used to represent FC mode ('reverse mode') (Section 2.3). Stack specifications were determined by the targeted sizing of the EC process and then kept the same for FC mode. Most of the components are reused but are sized as needed for each mode within the limits of the actual equipment to represent the operation in EC and FC modes. FC mode activates bypasses around heat exchangers and inactivates trim heaters since extensive pre-heat is not needed because in FC mode heat is produced within the stacks. All components in EC and FC modes would be present in the rSOC system, just in an inactive state while not being actively utilized in one mode or the other.

2.3 Electrolysis Cell Mode Model

The process flow diagram (PFD) in Figure 1 shows a simplified representation of the modeled unit operations in EC mode. The model represents the nominal electrolysis operation of reversible solid oxide (rSOC) stacks at a power of 10 MWe DC input. The steam generator overcomes the large heat of vaporization energy of water by using NPP thermal energy to vaporize the feedwater. The energy input to the steam generator was assumed to be from an extraction line after the high-pressure turbine of a generic PWR. The NPP steam extraction conditions were assumed to be 184.4°C (364°F) and 1103 kPa (160 psia). The flowrate of this input steam from the NPP was calculated to provide a 2°C superheat in the steam exiting the steam generator on the secondary side (103). The calculated flowrate is 3001 kg/h (6616 lbm/hr). The extracted steam from the NPP condenses in rSOC steam generator and is returned to the NPP condensate return. The effects of steam extraction from the NPP are not modeled in this work.

After the steam generator, primary air and fuel heat exchangers and low-temperature recuperators utilize heat from the outlet of the SOC stack (205, 303) to further heat the feed streams (203, 301). Fuel and air electric resistance trim heaters are used in EC mode after the heat recuperators to bring the inlet streams (204, 302) up to the required stack operating temperature of 790.0°C. In the product stream, a tee and H_2 recycle blower downstream of the outlet of the Fuel Low-Temperature Recuperator recycles enough hydrogen to the stack inlet (204) so that the inlet composition to the stacks is 90 mol% water and 10 mol% hydrogen, to maintain a hydrogen-reducing atmosphere on the stacks to reduce the rate of cell degradation. The water-hydrogen separation process separates water and compresses the hydrogen product and recycles the condensed water (H_2O Recy.) to be used again in EC mode.

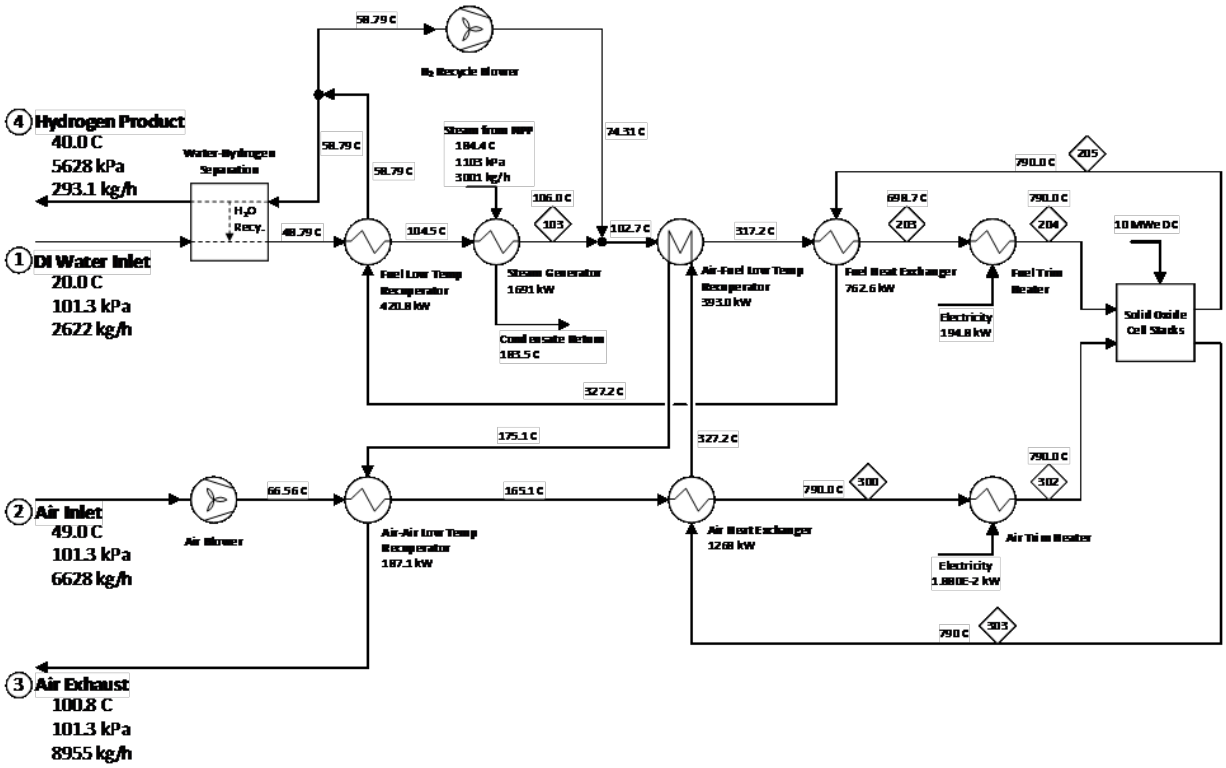

Figure 1. PFD for electrolysis operation, 10 MWe DC electricity consumed. Stream labels in diamonds match the stream labels in Figure 5 in the appendix.

Inlet and outlet stream conditions corresponding to the PFD in Figure 1 including additional information are presented in Table 1 for the EC mode of operation. Major energy flows in EC mode are presented in Table 2. Key results to note are the following:

- It is assumed that thermodynamic properties for all fluid flows are at atmospheric pressure, unless otherwise specified. As a limiting condition at the highest possible temperature, ambient air (2) is assumed with an inlet temperature of 49.0°C (120.2°F). DI water (1) inlet is assumed to be 20.0°C.
- Air inlet to the stacks (302) comes up to stack temperature by passing through recuperation of outlet stack heat and only minimal trim heating. The fuel stream (204) requires 194.8 kW of heating via the trim heater to raise the temperature to the stack operating temperature.
- Exhaust air (3) is 100.8°C so the exhaust vent will need to be placed with safety considered.
- This model has staged water-hydrogen separation to achieve a product hydrogen outlet purity of 99.99% (4). Cooling water requirements are summarized in Section 3.1 and Figure 3.

Table 1. EC Mode input and output conditions.

Parameter	(1) DI Water Inlet	(2) Air Inlet	(3) Air Exhaust	(4) H_2 Product
Vapor Fraction	0.0000	1.0000	1.0000	1.0000
Temperature (C)	20.00	49	100.8	40.00
Pressure (kPa)	101.3	101.3	101.3	5628
Molar Flow (kgmole/h)	145.5	229.6	302.5	145.4
Mass Flow (kg/h)	2622	6628	8955	293.1
Comp Mole Frac (H_2O)	1.0000	0.0000	0.0000	0.0000
Comp Mole Frac (Hydrogen)	0.0000	0.0000	0.0000	1.0000
Comp Mole Frac (Nitrogen)	0.0000	0.7900	0.6001	0.0000
Comp Mole Frac (Oxygen)	0.0000	0.2100	0.3999	0.0000

Table 2. EC Mode energy flows.

Parameter	Power (kW)	Form
Steam Generator	1691	Heat
Fuel Trim Heater	194.8	Electricity Consumption
Air Trim Heater	1.88E-2	Electricity Consumption
Fuel Heat Exchanger	762.6	Heat Duty
Air Heat Exchanger	1268	Heat Duty
Air-Fuel Low Temp Recuperator	393.0	Heat Duty
Air-Air Low Temp Recuperator	187.1	Heat Duty
Water-Fuel Low Temp Recuperator	420.8	Heat Duty

2.4 Fuel Cell Mode Model

The PFD in Figure 2 shows a simplified representation of the modeled unit operations in FC mode. The model represents the nominal fuel cell operation of the same reversible solid oxide (rSOC) system as described in the previous section which results in a power output of 2.37 MWe DC. Major differences between FC mode operation from the EC mode operation include:

- Hydrogen (204) and supra-stoichiometric air (302) are fed to the stacks to produce electricity. The byproduct water and hydrogen stream (205) is cooled to separate condensed water and hydrogen. The fuel stream (204) composition is 90% hydrogen and 10% steam.
- No water is required to be input into the system (1) during steady-state operation since enough water is produced from the fuel cell reaction and recycled in the Water-Hydrogen Separation process to achieve the 90% hydrogen and 10% steam composition in the fuel stream (204). Some water will be needed for startup but water will be plentifully available for this purpose.
- Bypass lines circumventing the primary fuel (202_Byp, 203_Byp) and air side heat exchangers (301_Byp, 302_Byp) are activated to assist with thermal management in FC mode.
- Trim heaters are inactivated in the FC model.

- Water-Fuel Low-Temperature Recuperators and Air-Fuel Low-Temperature Recuperators are inactivated (bypassed in reality).
- A portion of the water produced in FC mode (6) is recycled to be stored for later use in EC operation.

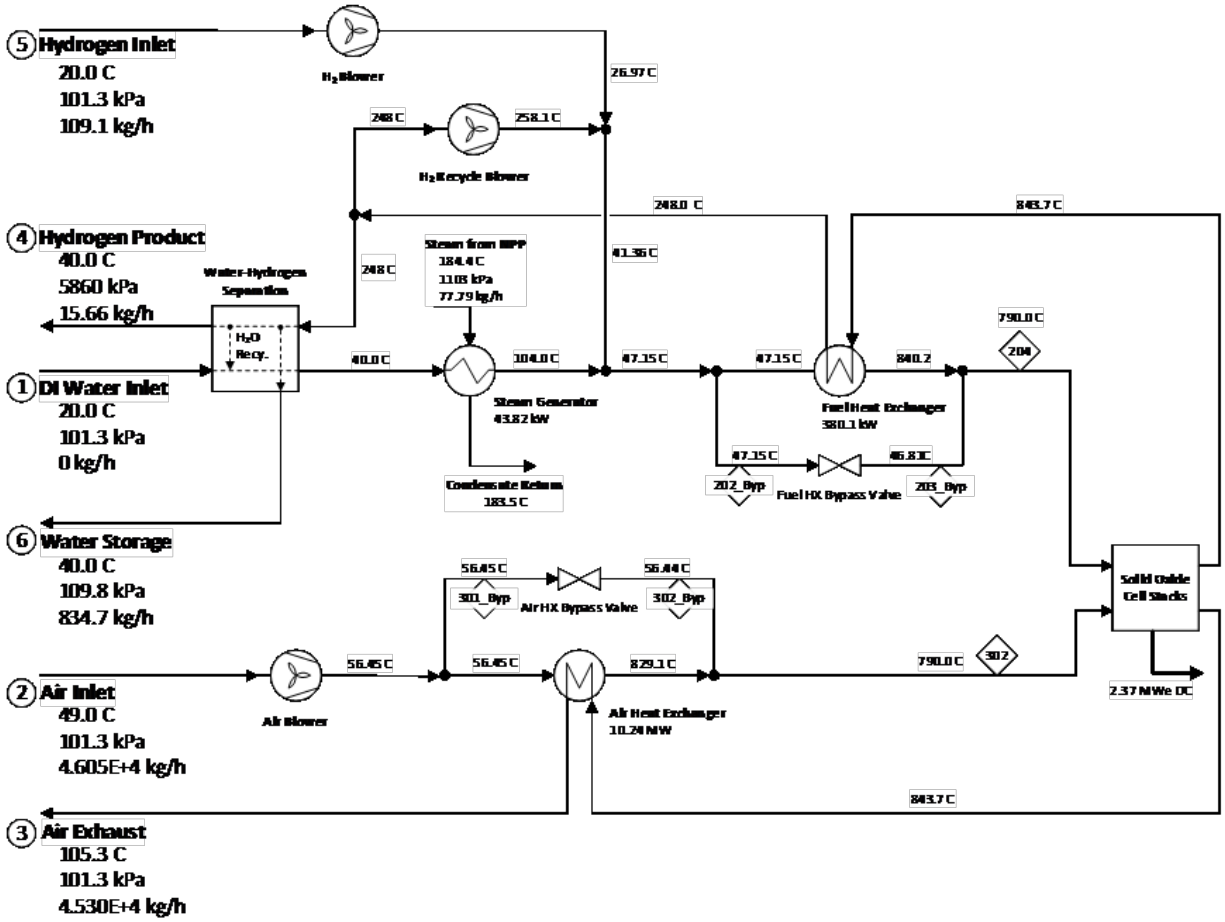

Figure 2. Fuel Cell operation, 2.37 MWe DC electricity produced. Stream labels in diamonds match the stream labels in Figure 6 in the appendix.

Inlet and outlet stream conditions are presented in Table 3 for the FC mode of operation. This includes additional information not shown on the PFD in Figure 2. Major energy flows are presented in Table 4.

- It is assumed that all inlet streams are at atmospheric pressure. Ambient air (2) is assumed to come in at an inlet temperature of 49.0°C (120.2°F). Hydrogen (5) is assumed to be 20.0°C.
- The air is exhausted (3) to the atmosphere at 105.3°C so the exhaust vent will need to be placed with safety considered.

Table 3. FC Mode input and output conditions.

Parameter	(1) DI Water Inlet	(2) Air Inlet	(5) H_2 Inlet
Vapor Fraction	0.0000	1.0000	1.0000
Temperature (C)	20.00	49	20.00
Pressure (kPa)	101.3	101.3	101.3
Molar Flow (kgmole/h)	0	1596	54.10
Mass Flow (kg/h)	0	4.605e+04	109.1
Comp Mole Frac (H_2O)	1.000	0.000	0.000
Comp Mole Frac (Hydrogen)	0.000	0.000	1.000
Comp Mole Frac (Nitrogen)	0.000	0.7900	0.000
Comp Mole Frac (Oxygen)	0.000	0.2100	0.000
Parameter	(6) Water Storage	(3) Air Exhaust	(4) H_2 Product
Vapor Fraction	0.0000	1.0000	1.0000
Temperature (C)	40.00	105.3	40.00
Pressure (kPa)	109.8	101.3	5860
Molar Flow (kgmole/h)	46.33	1573	7.767
Mass Flow (kg/h)	834.7	4.530e+004	15.66
Comp Mole Frac (H_2O)	1.000	0.000	0.000
Comp Mole Frac (Hydrogen)	0.000	0.000	1.000
Comp Mole Frac (Nitrogen)	0.000	0.8016	0.000
Comp Mole Frac (Oxygen)	0.000	0.1984	0.000

Table 4. FC Mode energy flows.

Parameter	Power (kW)	Form
Steam Generator	43.82	Heat
Fuel Heat Exchanger	380.1	Heat Duty
Air Heat Exchanger	1.024e+04	Heat Duty

2.5 Efficiency Calculations

In the EC mode, an AC to DC converter efficiency of 98% was used to calculate the power input required for the stacks for H_2 production[a]. This was added to the utility power requirement needed by the blower, trim heaters, compressors, and pumps within the system, to acquire the total power required by the rSOC in EC mode of 11.2 MWe AC.

Additionally, system efficiencies were calculated based on the lower and higher heat values of hydrogen using the following formula:

[a] https://www.ise.fraunhofer.de/content/dam/ise/de/documents/publications/studies/cost-forecast-for-low-temperature-electrolysis.pdf

Table 5 provides data related to the thermal and electrical efficiencies of the system, as well as the total power and energy consumption per kilogram of H_2 produced. These efficiencies are based on pure electrical input. Thermal input to the HTSE has been ignored.

Table 5 Electrolysis mode efficiency and energy consumption results.

Metric	Value	Unit
BoP Electrical Power	958.9	kWe AC
Stack Design Rating	10	MWe DC
Converter Efficiency	98	%
Total Electrical Power In	11.2	MWe AC
Total Thermal Power In	1.69	MWt
LHV for Hydrogen	1.20E+5	kJ/kg
HHV for Hydrogen	1.404E+5	kJ/kg
LHV Efficiency	87.5	%
HHV Efficiency	1.023	%
Electrical Energy Consumption	38.1	kWhe/kg H_2
Thermal Energy Consumption	5.77	kWht/kg H_2

In the FC mode, an inverter efficiency of 90% is used for DC to AC conversion. Additionally, the net power out (AC) is calculated by subtracting the utility power requirements needed for the blowers, compressors, and pumps used in the FC mode. Similar to the EC mode, the efficiency of the system is calculated using the following formula

Table 6 provides the calculated efficiencies and power parameters, the amount of H_2 consumed, and the amount of energy produced per kilogram of H_2.

Table 6. Fuel Cell mode efficiency, energy production, and hydrogen consumption results.

Metric	Value	Unit
BoP Electrical Power Requirements	138.9	kW AC
Stack Power Out (Design Rating)	2.37	MWe DC
Inverter Efficiency	90	%
Stack Power Out	2.13	MWe AC
Net Electrical Power Out	1.995	MWe AC
Total Thermal Power In (Steam)	43.82	kWt
LHV for Hydrogen	1.20E+5	kJ/kg
HHV for Hydrogen	1.404E+5	kJ/kg
LHV Efficiency	54.8	%
HHV Efficiency	46.9	%
Hydrogen Consumption	5.46E-02	kg H_2/kWhe
Energy Production	18.30	kWhe/kg H_2

3. INTERFACE REQUIREMENTS

The previous sections provided information on the process model development and a summary of the assumptions and results for the 10 MWe DC design of the rSOC demonstration-scale system. In this section, the plant system interface requirements are consolidated for reference and simplification. The exact values of these results are design specific and therefore may change depending on final design decisions. Also, a preliminary example site layout is included to show the approximate land area requirements for the system.

3.1 Utilities Summary

Table 7 summarizes the utility requirements for both operating modes. The "Cooling Water" row indicates the water required for the coolers in the water-hydrogen separation sub-system. The total electrical power is the AC power required, taking into account the electrical efficiency of the AC to DC conversion and the BoP requirements. An AC to DC conversion efficiency of 98% and DC to AC conversion efficiency of 90% was utilized based on generic specifications[b] for the electrolysis and fuel cell calculations, respectively.

[b] https://www.ise.fraunhofer.de/content/dam/ise/de/documents/publications/studies/cost-forecast-for-low-temperature-electrolysis.pdf

Table 7. Utility requirements.

	EC Mode	FC Mode	Units
BoP Electrical Power	958.9	138.9	kWe AC
Process Water	2622	NA*	kg/h
Process Air	6628	4.605e+4	kg/h
Process Hydrogen	NA*	109.1	kg/h
Instrument Air (60 psi)	As needed for control valves	As needed for control valves	NA
Cooling Water (15.0 C, 101.3 kPa)	1.604e+5	1.300e+5	kg/h

*The H_2 stream in the EC mode and water stream in FC mode are recycled from the stack exhausts.

3.2 Consolidated rSOC System Interface Requirements

The interface requirements needed to supply the rSOC with all services and flows are summarized in Figure 3, Table 8, and Table 9. Cooling water refers to the water required for the coolers in the water-hydrogen separation sub-system which is assumed to be at 15.0 C and atmospheric pressure (101.3 kPa). Steam input refers to the steam from the NPP steam generator that heats the inlet flow. BoP refers to power supplied to blowers and electric resistance trim heaters. Power to the steam generator is assumed to come fully thermally in the form of steam shown entering at the top of the system boundaries. Asterisks indicate assumed conditions that were specified in the model.

The maximum conditions that are determined by electrolysis operation are the cooling water requirements, steam input requirements, electrical input requirements, the process water "DI Water Inlet", and the hydrogen product. The maximum conditions that are determined by the fuel cell operation are the electrical output requirements, process hydrogen inlet, process air inlet, water storage, and air exhaust. Hydrogen inlet and water storage are unique to fuel cell operation. Hydrogen needed at the inlet and water condensed at the outlet are recycled streams.

A summary list of requirements during steady-state operation are as follows:

- Cooling Water – Cooling water is required for the coolers in the water-hydrogen separation sub-system and is required during the EC mode of operation. An estimated flow of 160.4 tonne/hr (353.6 klbm/hr or 725.2 gal/min) is required at a maximum 15.0°C (59 F) and atmospheric pressure.
- Steam Input – Steam from the NPP secondary system heats the inlet flow of 3001 kg/hr (6.616 klbm/hr) of steam at a minimum of 184.4 °C (364 F) and 1103 kPa (160 psi) is required for the EC mode.
- Hydrogen Inlet – The rSOC is sized to process 109.1 kg/h (240.4 lbm/hr) at full stack output in the FC mode. Hydrogen will be delivered from the system storage facility at atmospheric conditions. Hydrogen purity is 99.99%.
- DI Water Inlet – Process DI water with a maximum [conductivity of 1.00 umhos/cm or as required by the SOC manufacturer] is required at 2622 kg/h (5.78 klb/hr) at atmospheric conditions for the EC mode of operation.
- Air Inlet – Air will be taken directly from the atmosphere at 49°C and pressure at a flow rate of 4.605E4 kg/h (101.5 klbm/hr) during the FC mode of operation.
- Hydrogen Product – Hydrogen produced during EC mode is estimated at 293.1 kg/h (646.2 lbm/hr) at 40.0 °C (104 F) and 5628 kPa (816 psi). The product gas will subsequently be processed to achieve 99.99% purity and compressed and stored. Hydrogen storage capacity (pressure and volume) is not

included here and will be estimated as part of the conceptual design work. Also, note that the oxygen product is assumed vented and otherwise not processed.

- Condensate (to Water Storage) – Water production during the FC mode of operation is estimated at 834.7 kg/h (1.84 klbm/hr) and is discharged at 40.0 °C (104 F) and atmospheric pressure. Water quality is consistent with the chemistry of DI water.
- Air Exhaust – Cooling air for the rSOC stack will be discharged to the atmosphere at an estimated 105.3 °C (221.5 F) and at atmospheric pressure at a flow rate of 4.530E4 kg/h (99.9 klb/hr) during the FC mode of operation.
- Electrical Input – The rSOC system and BoP, including blowers and the electric resistance trim heater, require a power supply of 11.17 MW AC during the EC mode of operation. Other production loads including gas compression and hydrogen post-production processing must be quantified and added to this estimate for net power requirements.
- Electrical Output – The rSOC system will produce an estimated 2.371 MW DC.

It is important to note that the rate of hydrogen outlet from electrolysis operation is greater than the rate of hydrogen intake in fuel cell operation. Operation of 17.5 hrs in FC mode and 6.5 hrs in electrolysis mode in a 24-hr period results in all hydrogen produced in EC mode being consumed in FC mode. If more than 6.5 hrs each 24-hr period is spent in EC mode, there will be excess hydrogen that will need to be utilized or sold.

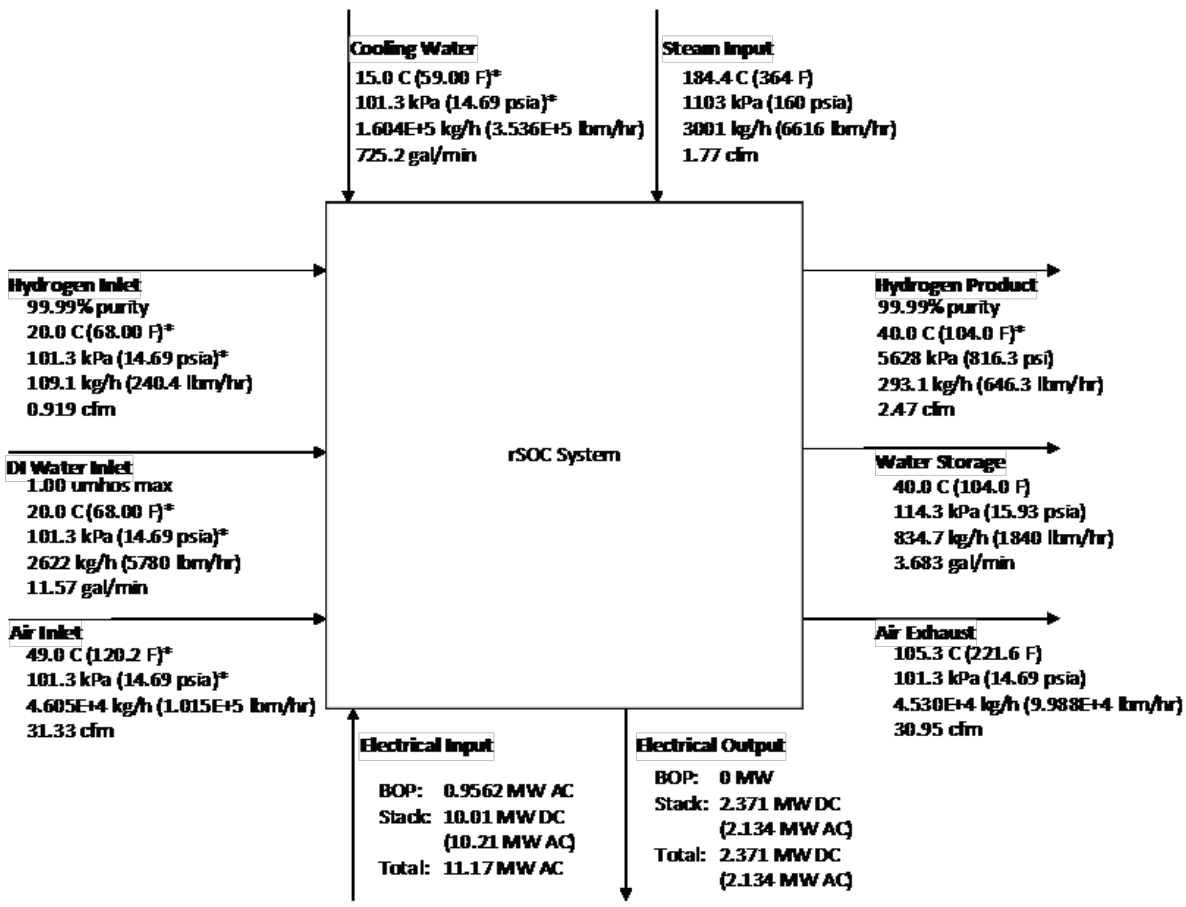

Figure 3. Plant system interface summary of maximum interface requirements for the rSOC system operation, considering both modes of operation. Asterisks indicate assumed conditions that were specified in the model.

Table 8. Process stream interface requirements.

Parameter	DI Water Inlet	Air Inlet	H_2 Inlet	Cooling Water
Vapor Fraction	0.0000	1.0000	1.0000	0.0000
Temperature (C)	20.00 (68.00 F)	49.00 (120.2 F)	20.00 (68.00 F)	15.00 (59.00 F)
Pressure (kPa)	101.3 (14.69 psi)	101.3 (14.69 psi)	101.3 (14.69 psi)	101.3 (14.69 psi)
Mass Flow (kg/h)	2262	4.605e+04	109.1	1.604e+05
Volumetric Flow	11.57 gal/min	31.33 cfm	0.919 cfm	725.2 gal/min
Comp Mole Frac (H_2O)	1.000	0.000	0.000	1.000
Comp Mole Frac (Hydrogen)	0.000	0.000	1.000	0.000
Comp Mole Frac (Nitrogen)	0.000	0.7900	0.000	0.000
Comp Mole Frac (Oxygen)	0.000	0.2100	0.000	0.000
Parameter	Water Storage	Air Exhaust	H_2 Product	Steam Input
Vapor Fraction	0.0000	1.0000	1.0000	1.000
Temperature (C)	40.00 (104.0 F)	105.3 (221.6 F)	40.00 (104.0 F)	184.4 (364 F)
Pressure (kPa)	114.3 (16.58 psi)	101.3 (14.69 psi)	5684 (816.3 psi)	1103 (160 psi)
Mass Flow (kg/h)	834.7	4.530e+004	293.1	3001
Volumetric Flow	3.683 gal/min	30.95 cfm	2.47 cfm	1.77 cfm
Comp Mole Frac (H_2O)	1.000	0.000	0.000	1.000
Comp Mole Frac (Hydrogen)	0.000	0.000	1.000	0.000
Comp Mole Frac (Nitrogen)	0.000	0.8016	0.000	0.000
Comp Mole Frac (Oxygen)	0.000	0.1984	0.000	0.000

Table 9. Electrical and thermal power interfaces requirements.

Interface	Value	Unit
Electrical Power Input	11.17	MW_e AC
Electrical Power Output	2.134	MW_e AC

3.2.1 Startup and Shutdown Requirements

During startup and shutdown, hydrogen and nitrogen are used to protect the system. Hydrogen is used to maintain a reducing atmosphere on the fuel electrode during transients and nitrogen is used as a safe purge gas and to remove moisture. The specific volumes of hydrogen and nitrogen needed for startup and shutdown are not specified because they will depend on the specific vendor system design.

- Nitrogen gas- (99.95% purity) with a minimum of two supply sources/tanks including one for active use and one as backup
- Hydrogen gas- (99.99% purity, 15 psig or less after the regulator, supply pressure less than 100 mbar at fuel recuperator inlet). The H_2 supply for startup can come from the general hydrogen storage that is also used for rSOC steady-state operation,

3.3 Conceptual Example Site Layout

Figure 4 represents a conceptual site layout plan for a 10 MWe DC SOEC/2.37 MWe DC SOFC rSOC plant. The purpose of this diagram is to identify the required major components and to suggest a typical layout to estimate site area requirements. Not shown are auxiliary buildings such as management and control buildings, which will likely already exist at operating facilities. Approximate areas for footprints shown are posted in the bottom right-hand corners of the footprint outline and a summary of the area shown is at the top center.

The approximate total area required for the rSOC system is about 12,000 ft^2 which consists of 4,922 ft^2 of footprint (40% of total area) dedicated to equipment and equipment infrastructure and the remainder (60%) as access space. Access space includes roadways and walkways for forklifts and other equipment required. This number approximately matches previously reported commercial facility sizes of 7.6kWe DC_{SIP}/m^2 with about 76% being bare areas, HV substation, stormwater drainage, personnel areas, etc. [c,d]

[c] https://www.sunfire.de/files/sunfire/images/content/Sunfire.de%20(neu)/Sunfire-Factsheet-HyLink-SOEC-20210303.pdf

[d] https://www.powergrid.com/td/underground-vs-overhead-power-line-installation-cost-comparison/

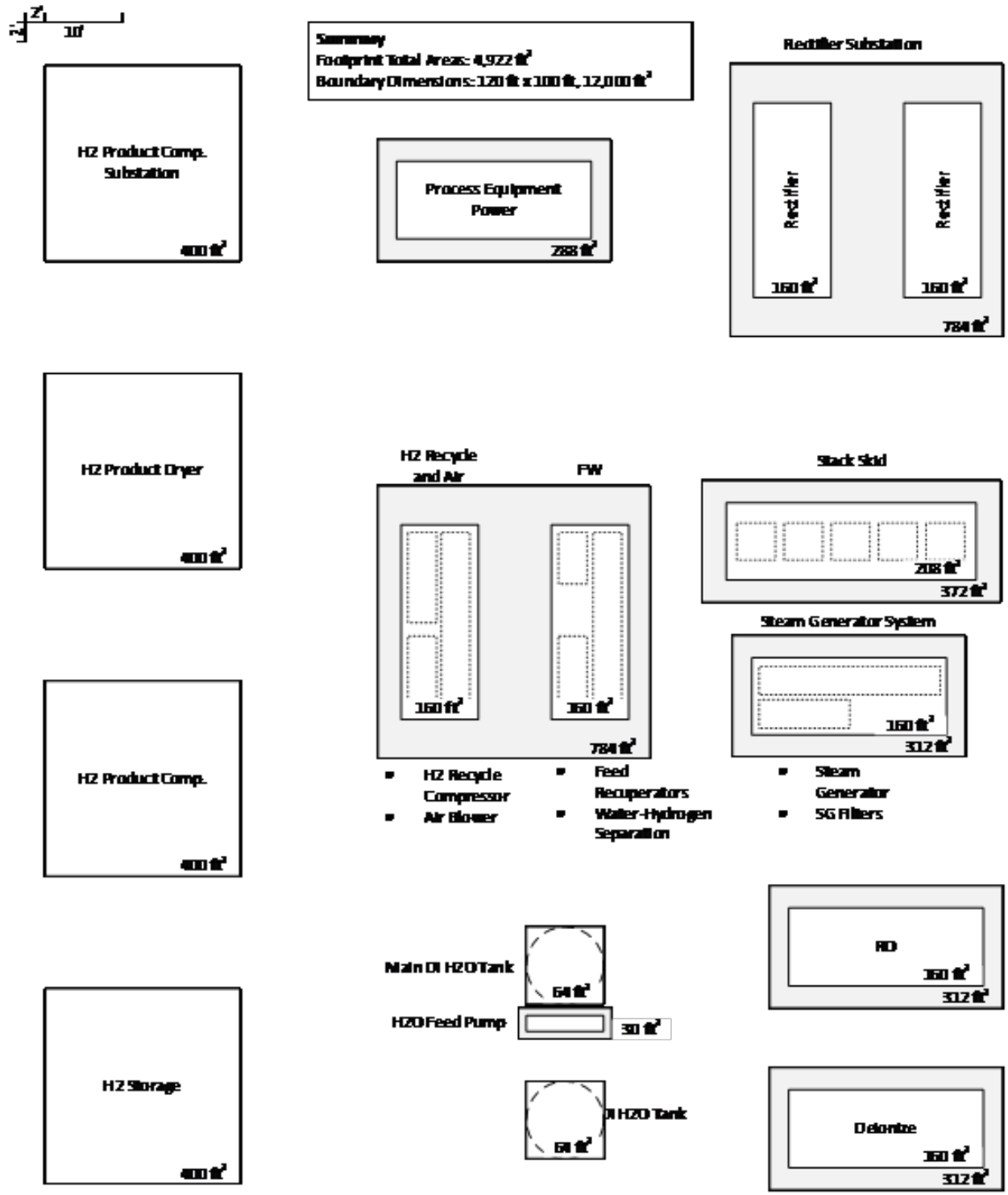

Figure 4. Rough hypothetical plant plot for 10 MWe DC SOEC / 2.37 MWe DC SOFC rSOC plant showing approximately 12,000 ft^2 of space required for the rSOC system.

4. SUMMARY

In this document, a preliminary process model of an rSOC system using thermal and electrical energy from an NPP has been presented. Stream and process equipment conditions have been documented as well as utility and energy requirements for this generalized system. The last section of the report summarized the interface requirements treating the rSOC base unit as a black box for simplicity. A preliminary example plot plan is also provided to illustrate the approximate land area needed for the rSOC system.

This design is intended to be used as a source for interface requirements for providing boundary conditions for integrating such a system near an NPP and a preliminary design that can be used to guide when discussing with potential rSOC suppliers and for future preliminary FEED and detailed contract engineering studies relating to the development of a detailed rSOC system.

Page intentionally left blank

Appendix A
EC Mode PFD

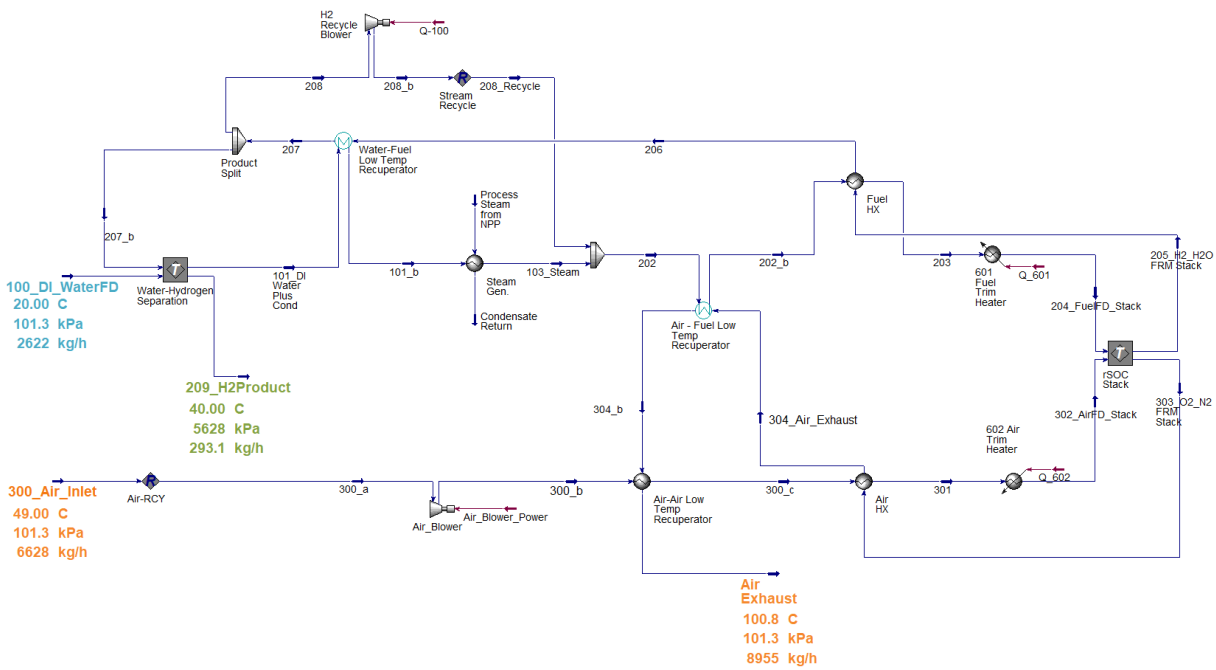

Figure 5. Electrolysis operation, 10 MWe DC, PFD from Aspen HYSYS.

Appendix B
EC Mode Heat and Material Balance Tables

aspentech	BATTELLE ENERGY ALLIANCE Bedford, MA USA	Case Name: 10MW_HTSE_Demo_Reversible_EC_85_recuperation_CLEAN_V5i.hsc Unit Set: EC Mode Date/Time: Wed Nov 30 14:36:31 2022

Workbook: Case (Main)

Material Streams

Fluid Pkg: All

Name		202_b	203	207	205_H2_H2O FRM St	204_FuelFD_Stack
Vapour Fraction		1.0000	1.0000	1.0000	1.0000	1.0000
Temperature	(C)	317.2	698.7	58.79	790.0	790.0
Pressure	(kPa)	114.4	112.1	103.4	107.6 *	109.8
Molar Flow	(kgmole/h)	190.1	190.1	190.1	190.1	190.1
Mass Flow	(kg/h)	3120	3120	793.7	793.7	3120
Liquid Volume Flow	(USGPM)	16.01	16.01	22.93	22.93	16.01
Heat Flow	(kW)	-1.096e+004	-1.020e+004	-1672	-488.5	-1.001e+004
Name		302_AirFD_Stack	303_O2_N2 FRM Stac	300_b	301	304_Air_Exhaust
Vapour Fraction		1.0000	1.0000	1.0000	1.0000	1.0000
Temperature	(C)	790.0	790.0	66.56	790.0 *	327.2
Pressure	(kPa)	109.8	107.6	116.7	112.1	105.5
Molar Flow	(kgmole/h)	229.8	302.5	229.8	229.8	302.5
Mass Flow	(kg/h)	6628	8955	6628	6628	8955
Liquid Volume Flow	(USGPM)	33.74	42.74	33.74	33.74	42.74
Heat Flow	(kW)	1532	2035	77.19	1532	767.1
Name		208_Recycle	209_H2Product	202	103_Steam	300_a
Vapour Fraction		1.0000	1.0000	1.0000	1.0000	1.0000
Temperature	(C)	74.31 *	40.00	102.7	106.0 *	49.00 *
Pressure	(kPa)	116.7 *	5628	116.7	116.7	101.3 *
Molar Flow	(kgmole/h)	21.95 *	145.4	190.1	168.1	229.8 *
Mass Flow	(kg/h)	91.67	293.1	3120	3028	6628
Liquid Volume Flow	(USGPM)	2.648	18.48	16.01	13.36	33.74
Heat Flow	(kW)	-190.3	17.44	-1.136e+004	-1.117e+004	44.31
Name		100_DI_WaterFD	101_DI Water Plus Co	101_b	206	Air Exhaust
Vapour Fraction		0.0000	0.0000	0.1137	1.0000	1.0000
Temperature	(C)	20.00 *	48.79	104.5	327.2	100.8
Pressure	(kPa)	101.3 *	121.5	119.1	105.5	101.3
Molar Flow	(kgmole/h)	145.5	168.1	168.1	190.1	302.5
Mass Flow	(kg/h)	2622	3028	3028	793.7	8955
Liquid Volume Flow	(USGPM)	11.57	13.36	13.36	22.93	42.74
Heat Flow	(kW)	-1.159e+004	-1.328e+004	-1.286e+004	-1251	187.0
Name		300_c	304_b	300_Air_Inlet	208	207_b
Vapour Fraction		1.0000	1.0000	1.0000	1.0000	1.0000
Temperature	(C)	165.1 *	175.1	49.00 *	58.79	58.79
Pressure	(kPa)	114.4	103.4	101.3 *	103.4	103.4
Molar Flow	(kgmole/h)	229.8	302.5	229.8	21.95	168.1
Mass Flow	(kg/h)	6628	8955	6628	91.67	702.0
Liquid Volume Flow	(USGPM)	33.74	42.74	33.74	2.648	20.28
Heat Flow	(kW)	264.3	374.1	44.31	-193.1	-1479
Name		208_b	Process Steam from N	Condensate Return	CoolingWater	
Vapour Fraction		1.0000	1.0000 *	0.0000 *	0.0000	
Temperature	(C)	74.31	184.4	183.5	15.00 *	
Pressure	(kPa)	116.7	1103 *	1081	101.3 *	
Molar Flow	(kgmole/h)	21.95	166.6	166.6	8904	
Mass Flow	(kg/h)	91.67	3001	3001	1.604e+005 *	
Liquid Volume Flow	(USGPM)	2.648	13.24	13.24	707.6	
Heat Flow	(kW)	-190.3	-1.097e+004	-1.266e+004	-7.098e+005	

Licensed to: BATTELLE ENERGY ALLIANCE

* Specified by user.

aspentech	BATTELLE ENERGY ALLIANCE Bedford, MA USA	Case Name: 10MW_HTSE_Demo_Reversible_EC_85_recuperation_CLEAN_V5i.hsc Unit Set: EC Mode Date/Time: Wed Nov 30 14:36:31 2022

Workbook: Case (Main) (continued)

Compositions

Fluid Pkg: Basis-1

Name	202_b	203	207	205_H2_H2O FRM St	204_FuelFD_Stack
Comp Mole Frac (H2O)	0.9001	0.9001	0.1350	0.1350	0.9001
Comp Mole Frac (Hydrogen)	0.0999	0.0999	0.8650	0.8650	0.0999
Comp Mole Frac (Nitrogen)	0.0000	0.0000	0.0000	0.0000	0.0000
Comp Mole Frac (Oxygen)	0.0000	0.0000	0.0000	0.0000	0.0000
Name	302_AirFD_Stack	303_O2_N2 FRM Stac	300_b	301	304_Air_Exhaust
Comp Mole Frac (H2O)	0.0000	0.0000	0.0000	0.0000 *	0.0000
Comp Mole Frac (Hydrogen)	0.0000	0.0000	0.0000	0.0000 *	0.0000
Comp Mole Frac (Nitrogen)	0.7900	0.6001	0.7900	0.7900 *	0.6001
Comp Mole Frac (Oxygen)	0.2100	0.3999	0.2100	0.2100 *	0.3999
Name	208_Recycle	209_H2Product	202	103_Steam	300_a
Comp Mole Frac (H2O)	0.1350 *	0.0000	0.9001	1.0000	0.0000 *
Comp Mole Frac (Hydrogen)	0.8650 *	1.0000	0.0999	0.0000	0.0000 *
Comp Mole Frac (Nitrogen)	0.0000 *	0.0000	0.0000	0.0000	0.7900 *
Comp Mole Frac (Oxygen)	0.0000 *	0.0000	0.0000	0.0000	0.2100 *
Name	100_DI_WaterFD	101_DI Water Plus Co	101_b	206	Air Exhaust
Comp Mole Frac (H2O)	1.0000 *	1.0000	1.0000	0.1350	0.0000
Comp Mole Frac (Hydrogen)	0.0000 *	0.0000	0.0000	0.8650	0.0000
Comp Mole Frac (Nitrogen)	0.0000 *	0.0000	0.0000	0.0000	0.6001
Comp Mole Frac (Oxygen)	0.0000 *	0.0000	0.0000	0.0000	0.3999
Name	300_c	304_b	300_Air_Inlet	208	207_b
Comp Mole Frac (H2O)	0.0000	0.0000	0.0000 *	0.1350	0.1350
Comp Mole Frac (Hydrogen)	0.0000	0.0000	0.0000 *	0.8650	0.8650
Comp Mole Frac (Nitrogen)	0.7900	0.6001	0.7900 *	0.0000	0.0000
Comp Mole Frac (Oxygen)	0.2100	0.3999	0.2100 *	0.0000	0.0000
Name	208_b	Process Steam from N	Condensate Return	CoolingWater	
Comp Mole Frac (H2O)	0.1350	1.0000 *	1.0000	1.0000 *	
Comp Mole Frac (Hydrogen)	0.8650	0.0000 *	0.0000	0.0000 *	
Comp Mole Frac (Nitrogen)	0.0000	0.0000 *	0.0000	0.0000 *	
Comp Mole Frac (Oxygen)	0.0000	0.0000 *	0.0000	0.0000 *	

Energy Streams

Fluid Pkg: All

Name	Q_601	Q_602	Air_Blower_Power	Q-100	
Heat Flow (kW)	194.8	1.880e-002	32.88	2.767	

Workbook: rSOC Stack (rSOC)

Material Streams

Fluid Pkg: All

Name	Vapor Product @rSOC	Liq @rSOC	303_a @rSOC	205 @rSOC	204 @rSOC
Vapour Fraction	1.0000	0.0000	1.0000	1.0000	1.0000
Temperature (C)	790.0 *	790.0	790.0	790.0	790.0
Pressure (kPa)	107.6	107.6	107.6	107.6	109.8
Molar Flow (kgmole/h)	262.8	0.0000	72.70	190.1	190.1
Mass Flow (kg/h)	3120	0.0000	2326	793.7	3120
Liquid Volume Flow (USGPM)	31.93	0.0000	9.003	22.93	16.01
Heat Flow (kW)	14.29	0.0000	502.8	-488.5	-1.001e+004

aspentech	BATTELLE ENERGY ALLIANCE Bedford, MA USA	Case Name: 10MW_HTSE_Demo_Reversible_EC_85_recuperation_CLEAN_V5i.hsc Unit Set: EC Mode Date/Time: Wed Nov 30 14:36:31 2022

Workbook: rSOC Stack (rSOC) (continued)

Material Streams (continued)

Fluid Pkg: All

Name		303 @rSOC	302 @rSOC	1 @rSOC		
Vapour Fraction		1.0000	1.0000	1.0000		
Temperature	(C)	790.0	790.0	790.0		
Pressure	(kPa)	107.6	109.8	107.6		
Molar Flow	(kgmole/h)	302.5	229.8	229.8		
Mass Flow	(kg/h)	8955	6628	6628		
Liquid Volume Flow	(USGPM)	42.74	33.74	33.74		
Heat Flow	(kW)	2035	1532	1532		

Compositions

Fluid Pkg: All

Name	Vapor Product @rSOC	Liq @rSOC	303_a @rSOC	205 @rSOC	204 @rSOC
Comp Mole Frac (H2O)	0.0977	0.0977	0.0000	0.1350	0.9001
Comp Mole Frac (Hydrogen)	0.6257	0.6257	0.0000	0.8650	0.0999
Comp Mole Frac (Nitrogen)	0.0000	0.0000	0.0000	0.0000	0.0000
Comp Mole Frac (Oxygen)	0.2767	0.2767	1.0000	0.0000	0.0000

Name	303 @rSOC	302 @rSOC	1 @rSOC		
Comp Mole Frac (H2O)	0.0000	0.0000	0.0000		
Comp Mole Frac (Hydrogen)	0.0000	0.0000	0.0000		
Comp Mole Frac (Nitrogen)	0.6001	0.7900	0.7900		
Comp Mole Frac (Oxygen)	0.3999	0.2100	0.2100		

Energy Streams

Fluid Pkg: All

Name		Q_603 @rSOC	Q_Electrode @rSOC	Electric Power @rSOC	Inverter Power @rSOC	
Heat Flow	(kW)	1.002e+004	0.0000 *	1.001e+004	1.117e+004	

Workbook: Water-Hydrogen Separation (H2/H2O)

Material Streams

Fluid Pkg: All

Name		100_DI_Water @H2/H	207_b @H2/H2O	1 @H2/H2O	2 @H2/H2O	3 @H2/H2O
Vapour Fraction		0.0000	1.0000	0.9339	1.0000	0.0000
Temperature	(C)	20.00	58.79	40.00 *	40.00	40.00
Pressure	(kPa)	101.3	103.4	99.27	99.27	99.27
Molar Flow	(kgmole/h)	145.5	168.1	168.1	157.0	11.11
Mass Flow	(kg/h)	2622	702.0	702.0	501.9	200.1
Liquid Volume Flow	(USGPM)	11.57	20.28	20.28	19.40	0.8829
Heat Flow	(kW)	-1.159e+004	-1479	-1639	-759.6	-879.6

Name		4 @H2/H2O	5 @H2/H2O	7 @H2/H2O	8 @H2/H2O	9 @H2/H2O
Vapour Fraction		1.0000	1.0000 *	0.9523	0.9356	1.0000
Temperature	(C)	183.2 *	60.50	60.50	40.00 *	40.00
Pressure	(kPa)	278.0	278.0	762.7	747.5	747.5
Molar Flow	(kgmole/h)	157.0	157.0	157.0	157.0	146.9
Mass Flow	(kg/h)	501.9	501.9	501.9	501.9	319.8
Liquid Volume Flow	(USGPM)	19.40	19.40	19.40	19.40	18.59
Heat Flow	(kW)	-578.1	-733.9	-823.0	-882.4	-82.04

Licensed to: BATTELLE ENERGY ALLIANCE

* Specified by user.

aspentech	BATTELLE ENERGY ALLIANCE Bedford, MA USA	Case Name: 10MW_HTSE_Demo_Reversible_EC_85_recuperation_CLEAN_V5i.hsc Unit Set: EC Mode Date/Time: Wed Nov 30 14:36:31 2022

Workbook: Water-Hydrogen Separation (H2/H2O) (continued)

Material Streams (continued)

Fluid Pkg: All

Name		10 @H2/H2O	11 @H2/H2O	12 @H2/H2O	23 @H2/H2O	24 @H2/H2O
Vapour Fraction		0.0000	1.0000	1.0000 *	0.9941	0.9915
Temperature	(C)	40.00	185.4 *	59.68	59.68	40.00 *
Pressure	(kPa)	747.5	2093	2093	5743	5628
Molar Flow	(kgmole/h)	10.11	146.9	146.9	146.9	146.9
Mass Flow	(kg/h)	182.1	319.8	319.8	319.8	319.8
Liquid Volume Flow	(USGPM)	0.8034	18.59	18.59	18.59	18.59
Heat Flow	(kW)	-800.3	88.71	-59.12	-69.16	-96.91
Name		25 @H2/H2O	26 @H2/H2O	6 @H2/H2O	209_H2Product @H2/	14 @H2/H2O
Vapour Fraction		0.0000	1.0000	1.0000	1.0000	0.0000
Temperature	(C)	40.00	40.00	53.29	40.00 *	40.00
Pressure	(kPa)	5628	5628	101.3	5628	5628
Molar Flow	(kgmole/h)	1.243	145.6	168.1	145.4	0.2371
Mass Flow	(kg/h)	22.39	297.4	702.0	293.1	4.271
Liquid Volume Flow	(USGPM)	9.879e-002	18.49	20.28	18.48	1.884e-002
Heat Flow	(kW)	-98.37	1.461	-1486	17.44	-18.77
Name		15 @H2/H2O	16 @H2/H2O	17 @H2/H2O	18 @H2/H2O	19 @H2/H2O
Vapour Fraction		1.0000	0.0000	0.0000	0.0000	1.0000
Temperature	(C)	58.79 *	20.00	50.12	40.10	212.7 *
Pressure	(kPa)	103.4 *	126.5	121.5	747.5	778.3
Molar Flow	(kgmole/h)	168.1 *	145.4	145.4	22.70	157.0
Mass Flow	(kg/h)	702.0	2620	2620	408.9	501.9
Liquid Volume Flow	(USGPM)	20.28	11.56	11.56	1.804	19.40
Heat Flow	(kW)	-1479	-1.158e+004	-1.148e+004	-1797	-540.6
Name		21 @H2/H2O	22 @H2/H2O	28 @H2/H2O	31 @H2/H2O	32 @H2/H2O
Vapour Fraction		0.0000	0.0000	1.0000	0.0000	0.0001
Temperature	(C)	40.06	20.00 *	214.2 *	40.00	41.07
Pressure	(kPa)	747.5	101.3 *	5860	5628	747.5
Molar Flow	(kgmole/h)	11.11	145.4 *	146.9	1.480	1.480
Mass Flow	(kg/h)	200.1	2620	319.8	26.66	26.66
Liquid Volume Flow	(USGPM)	0.8829	11.56	18.59	0.1176	0.1176
Heat Flow	(kW)	-879.6	-1.158e+004	123.7	-117.1	-117.1
Name		33 @H2/H2O	101_DI Water Plus Re	13 @H2/H2O	34 @H2/H2O	27 @H2/H2O
Vapour Fraction		0.0000	0.0000	0.0000	0.0000	0.0000
Temperature	(C)	40.14	48.79	28.84	47.73	40.24
Pressure	(kPa)	747.5	121.5 *	126.5	124.0	121.5
Molar Flow	(kgmole/h)	11.59	168.1	145.4	145.4	22.70
Mass Flow	(kg/h)	208.7	3028	2620	2620	408.9
Liquid Volume Flow	(USGPM)	0.9210	13.36	11.56	11.56	1.804
Heat Flow	(kW)	-917.4	-1.328e+004	-1.155e+004	-1.149e+004	-1797

Compositions

Fluid Pkg: All

Name	100_DI_Water @H2/H	207_b @H2/H2O	1 @H2/H2O	2 @H2/H2O	3 @H2/H2O
Comp Mole Frac (H2O)	1.0000	0.1350	0.1350	0.0738	1.0000
Comp Mole Frac (Hydrogen)	0.0000	0.8650	0.8650	0.9262	0.0000
Comp Mole Frac (Nitrogen)	0.0000	0.0000	0.0000	0.0000	0.0000
Comp Mole Frac (Oxygen)	0.0000	0.0000	0.0000	0.0000	0.0000
Name	4 @H2/H2O	5 @H2/H2O	7 @H2/H2O	8 @H2/H2O	9 @H2/H2O
Comp Mole Frac (H2O)	0.0738	0.0738	0.0738	0.0738	0.0101
Comp Mole Frac (Hydrogen)	0.9262	0.9262	0.9262	0.9262	0.9899
Comp Mole Frac (Nitrogen)	0.0000	0.0000	0.0000	0.0000	0.0000
Comp Mole Frac (Oxygen)	0.0000	0.0000	0.0000	0.0000	0.0000

Licensed to: BATTELLE ENERGY ALLIANCE

* Specified by user.

aspentech	BATTELLE ENERGY ALLIANCE Bedford, MA USA	Case Name: 10MW_HTSE_Demo_Reversible_EC_85_recuperation_CLEAN_V5i.hsc Unit Set: EC Mode Date/Time: Wed Nov 30 14:36:31 2022

Workbook: Water-Hydrogen Separation (H2/H2O) (continued)

Compositions (continued)

Fluid Pkg: All

Name	10 @H2/H2O	11 @H2/H2O	12 @H2/H2O	23 @H2/H2O	24 @H2/H2O
Comp Mole Frac (H2O)	1.0000	0.0101	0.0101	0.0101	0.0101
Comp Mole Frac (Hydrogen)	0.0000	0.9899	0.9899	0.9899	0.9899
Comp Mole Frac (Nitrogen)	0.0000	0.0000	0.0000	0.0000	0.0000
Comp Mole Frac (Oxygen)	0.0000	0.0000	0.0000	0.0000	0.0000
Name	25 @H2/H2O	26 @H2/H2O	6 @H2/H2O	209_H2Product @H2/	14 @H2/H2O
Comp Mole Frac (H2O)	0.9999	0.0016	0.1350	0.0000	1.0000
Comp Mole Frac (Hydrogen)	0.0001	0.9984	0.8650	1.0000	0.0000
Comp Mole Frac (Nitrogen)	0.0000	0.0000	0.0000	0.0000	0.0000
Comp Mole Frac (Oxygen)	0.0000	0.0000	0.0000	0.0000	0.0000
Name	15 @H2/H2O	16 @H2/H2O	17 @H2/H2O	18 @H2/H2O	19 @H2/H2O
Comp Mole Frac (H2O)	0.1350 *	1.0000 *	1.0000	1.0000	0.0738
Comp Mole Frac (Hydrogen)	0.8650 *	0.0000 *	0.0000	0.0000	0.9262
Comp Mole Frac (Nitrogen)	0.0000 *	0.0000 *	0.0000	0.0000	0.0000
Comp Mole Frac (Oxygen)	0.0000 *	0.0000 *	0.0000	0.0000	0.0000
Name	21 @H2/H2O	22 @H2/H2O	28 @H2/H2O	31 @H2/H2O	32 @H2/H2O
Comp Mole Frac (H2O)	1.0000	1.0000 *	0.0101	0.9999	0.9999
Comp Mole Frac (Hydrogen)	0.0000	0.0000 *	0.9899	0.0001	0.0001
Comp Mole Frac (Nitrogen)	0.0000	0.0000 *	0.0000	0.0000	0.0000
Comp Mole Frac (Oxygen)	0.0000	0.0000 *	0.0000	0.0000	0.0000
Name	33 @H2/H2O	101_DI Water Plus Re	13 @H2/H2O	34 @H2/H2O	27 @H2/H2O
Comp Mole Frac (H2O)	1.0000	1.0000	1.0000	1.0000	1.0000
Comp Mole Frac (Hydrogen)	0.0000	0.0000	0.0000	0.0000	0.0000
Comp Mole Frac (Nitrogen)	0.0000	0.0000	0.0000	0.0000	0.0000
Comp Mole Frac (Oxygen)	0.0000	0.0000	0.0000	0.0000	0.0000

Energy Streams

Fluid Pkg: All

Name		Q-100 @H2/H2O	Q-101 @H2/H2O	Q-102 @H2/H2O	Q-103 @H2/H2O	Q-105 @H2/H2O
Heat Flow	(kW)	153.0	181.4	193.4	155.8	282.5
Name		Q-106 @H2/H2O	Q-107 @H2/H2O	Q-108 @H2/H2O	Q-116 @H2/H2O	Q-104 @H2/H2O
Heat Flow	(kW)	170.7	147.8	182.8	192.8	-2.784
Name		Water Drain Pump Po	Inlet Pump Power @H			
Heat Flow	(kW)	4.824e-002	2.419e-002			

Licensed to: BATTELLE ENERGY ALLIANCE

* Specified by user.

Page intentionally left blank

Appendix C
FC Mode PFD

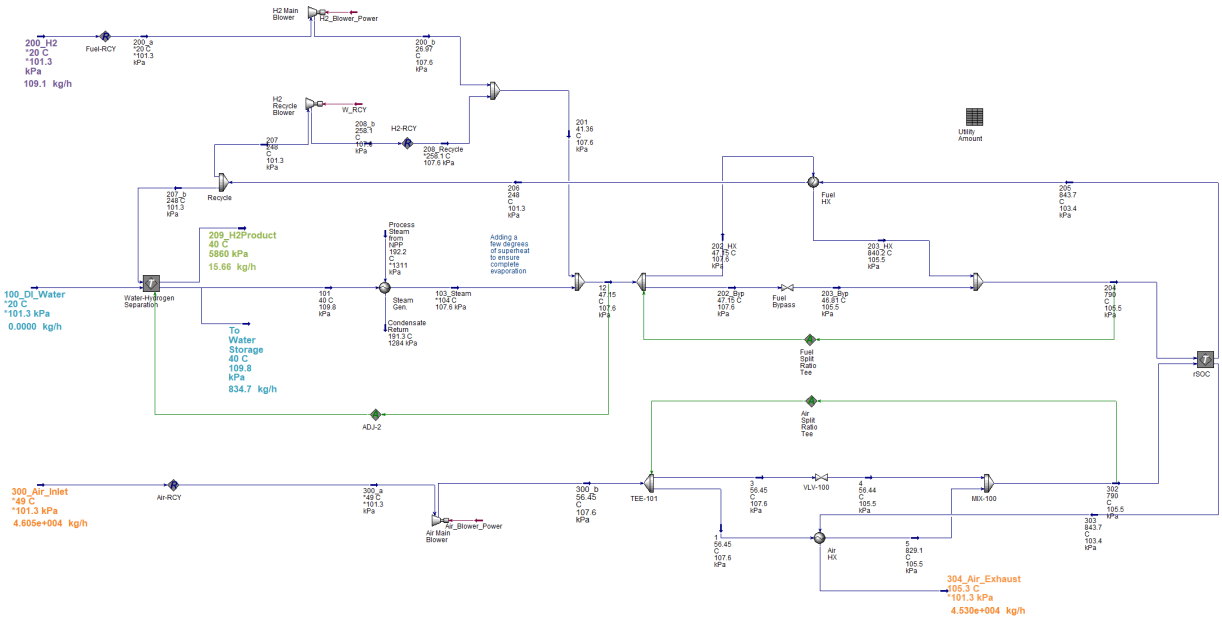

Figure 6. Fuel Cell operation, 2.37 MWe DC, PFD from Aspen HYSYS.

Appendix D
FC Mode H&M Tables

aspentech	BATTELLE ENERGY ALLIANCE Bedford, MA USA	Case Name: 10MW_HTSE_Demo_Reversible_FC_85_Clean_V12g.hsc Unit Set: FC Mode Date/Time: Thu Dec 1 08:04:56 2022

Workbook: Case (Main)

Material Streams

Fluid Pkg: All

Name		205	204	302	303	300_b
Vapour Fraction		1.0000	1.0000	1.0000	1.0000	1.0000
Temperature	(C)	843.7	790.0	790.0	843.7	56.45
Pressure	(kPa)	103.4	105.5	105.5	103.4	107.6
Molar Flow	(kgmole/h)	60.57	60.57	1596	1573	1596
Mass Flow	(kg/h)	960.4	219.1	4.605e+004	4.530e+004	4.605e+004
Name		304_Air_Exhaust	207	208_Recycle	202_HX	203_HX
Vapour Fraction		1.0000	1.0000	1.0000	0.9989	1.0000
Temperature	(C)	105.3	248.0	258.1 *	47.15	840.2
Pressure	(kPa)	101.3 *	101.3	107.6	107.6	105.5
Molar Flow	(kgmole/h)	1573	3.029	3.029 *	56.56	56.56
Mass Flow	(kg/h)	4.530e+004	48.02	48.02	204.6	204.6
Name		103_Steam	300_a	208_b	202_Byp	203_Byp
Vapour Fraction		1.0000	1.0000	1.0000	0.9989	0.9991
Temperature	(C)	104.0 *	49.00 *	258.1	47.15	46.81
Pressure	(kPa)	107.6	101.3 *	107.6	107.6	105.5
Molar Flow	(kgmole/h)	3.442	1596 *	3.029	4.012	4.012
Mass Flow	(kg/h)	62.00	4.605e+004	48.02	14.51	14.51
Name		201	200_a	200_H2	200_b	206
Vapour Fraction		1.0000	1.0000	1.0000	1.0000	1.0000
Temperature	(C)	41.36	20.00 *	20.00 *	26.97	248.0
Pressure	(kPa)	107.6	101.3 *	101.3 *	107.6	101.3
Molar Flow	(kgmole/h)	57.13	54.10 *	54.10	54.10	60.57
Mass Flow	(kg/h)	157.1	109.1	109.1	109.1	960.4
Name		300_Air_Inlet	12	100_DI_Water	207_b	209_H2Product
Vapour Fraction		1.0000	0.9989	0.0000	1.0000	1.0000
Temperature	(C)	49.00 *	47.15	20.00 *	248.0	40.00
Pressure	(kPa)	101.3 *	107.6	101.3 *	101.3	5860
Molar Flow	(kgmole/h)	1596	60.57	0.0000	57.54	7.767
Mass Flow	(kg/h)	4.605e+004	219.1	0.0000	912.4	15.66
Name		101	To Water Storage	1	3	4
Vapour Fraction		0.0000	0.0000	1.0000	1.0000	1.0000
Temperature	(C)	40.00	40.00	56.45	56.45	56.44
Pressure	(kPa)	109.8	109.8	107.6	107.6	105.5
Molar Flow	(kgmole/h)	3.442	46.33	1510	85.55	85.55
Mass Flow	(kg/h)	62.00	834.7	4.358e+004	2468	2468
Name		5	Process Steam from N	Condensate Return		
Vapour Fraction		1.0000	1.0000 *	0.0000 *		
Temperature	(C)	829.1	184.4	183.5		
Pressure	(kPa)	105.5	1103 *	1081		
Molar Flow	(kgmole/h)	1510	4.318	4.318		
Mass Flow	(kg/h)	4.358e+004	77.79	77.79		

Compositions

Fluid Pkg: Basis-1

Name	205	204	302	303	300_b
Comp Mole Frac (H2O)	0.8650	0.1001	0.0000	0.0000	0.0000
Comp Mole Frac (Hydrogen)	0.1350	0.8999	0.0000	0.0000	0.0000
Comp Mole Frac (Nitrogen)	0.0000	0.0000	0.7900	0.8016	0.7900
Comp Mole Frac (Oxygen)	0.0000	0.0000	0.2100	0.1984	0.2100

* Specified by user.

aspentech	BATTELLE ENERGY ALLIANCE Bedford, MA USA	Case Name: 10MW_HTSE_Demo_Reversible_FC_85_Clean_V12g.hsc Unit Set: FC Mode Date/Time: Thu Dec 1 08:04:56 2022

Workbook: Case (Main) (continued)

Compositions (continued)

Fluid Pkg: Basis-1

Name	304_Air_Exhaust	207	208_Recycle	202_HX	203_HX
Comp Mole Frac (H2O)	0.0000	0.8650	0.8650 *	0.1001	0.1001
Comp Mole Frac (Hydrogen)	0.0000	0.1350	0.1350 *	0.8999	0.8999
Comp Mole Frac (Nitrogen)	0.8016	0.0000	0.0000 *	0.0000	0.0000
Comp Mole Frac (Oxygen)	0.1984	0.0000	0.0000 *	0.0000	0.0000
Name	103_Steam	300_a	208_b	202_Byp	203_Byp
Comp Mole Frac (H2O)	1.0000	0.0000 *	0.8650	0.1001	0.1001
Comp Mole Frac (Hydrogen)	0.0000	0.0000 *	0.1350	0.8999	0.8999
Comp Mole Frac (Nitrogen)	0.0000	0.7900 *	0.0000	0.0000	0.0000
Comp Mole Frac (Oxygen)	0.0000	0.2100 *	0.0000	0.0000	0.0000
Name	201	200_a	200_H2	200_b	206
Comp Mole Frac (H2O)	0.0459	0.0000 *	0.0000 *	0.0000	0.8650
Comp Mole Frac (Hydrogen)	0.9541	1.0000 *	1.0000 *	1.0000	0.1350
Comp Mole Frac (Nitrogen)	0.0000	0.0000 *	0.0000 *	0.0000	0.0000
Comp Mole Frac (Oxygen)	0.0000	0.0000 *	0.0000 *	0.0000	0.0000
Name	300_Air_Inlet	12	100_DI_Water	207_b	209_H2Product
Comp Mole Frac (H2O)	0.0000 *	0.1001	1.0000 *	0.8650	0.0000
Comp Mole Frac (Hydrogen)	0.0000 *	0.8999	0.0000 *	0.1350	1.0000
Comp Mole Frac (Nitrogen)	0.7900 *	0.0000	0.0000 *	0.0000	0.0000
Comp Mole Frac (Oxygen)	0.2100 *	0.0000	0.0000 *	0.0000	0.0000
Name	101	To Water Storage	1	3	4
Comp Mole Frac (H2O)	1.0000	1.0000	0.0000	0.0000	0.0000
Comp Mole Frac (Hydrogen)	0.0000	0.0000	0.0000	0.0000	0.0000
Comp Mole Frac (Nitrogen)	0.0000	0.0000	0.7900	0.7900	0.7900
Comp Mole Frac (Oxygen)	0.0000	0.0000	0.2100	0.2100	0.2100
Name	5	Process Steam from N	Condensate Return		
Comp Mole Frac (H2O)	0.0000	1.0000 *	1.0000		
Comp Mole Frac (Hydrogen)	0.0000	0.0000 *	0.0000		
Comp Mole Frac (Nitrogen)	0.7900	0.0000 *	0.0000		
Comp Mole Frac (Oxygen)	0.2100	0.0000 *	0.0000		

Energy Streams

Fluid Pkg: All

Name	W_RCY	Air_Blower_Power	H2_Blower_Power		
Heat Flow (kW)	0.2948	96.76	2.976		

Workbook: rSOC (rSOC)

Material Streams

Fluid Pkg: All

Name	Vapor Product @rSOC	Liq @rSOC	204_b @rSOC	205 @rSOC	204 @rSOC
Vapour Fraction	1.0000	0.0000	1.0000	1.0000	1.0000
Temperature (C)	843.7 *	843.7	790.0	843.7	790.0
Pressure (kPa)	103.4	103.4	105.5	103.4	105.5
Molar Flow (kgmole/h)	1633	0.0000	1657	60.57	60.57
Mass Flow (kg/h)	4.626e+004	0.0000	4.626e+004	960.4	219.1
Liquid Volume Flow (m3/h)	53.76	0.0000	54.91	1.182	1.682
Heat Flow (kW)	8254	0.0000	1.063e+004	-3013	-17.14

Licensed to: BATTELLE ENERGY ALLIANCE

* Specified by user.

aspentech	BATTELLE ENERGY ALLIANCE Bedford, MA USA	Case Name: 10MW_HTSE_Demo_Reversible_FC_85_Clean_V12g.hsc Unit Set: FC Mode Date/Time: Thu Dec 1 08:04:56 2022

Workbook: rSOC (rSOC) (continued)

Material Streams (continued)

Fluid Pkg: All

Name		303 @rSOC	302 @rSOC			
Vapour Fraction		1.0000	1.0000			
Temperature	(C)	843.7	790.0			
Pressure	(kPa)	103.4	105.5			
Molar Flow	(kgmole/h)	1573	1596			
Mass Flow	(kg/h)	4.530e+004	4.605e+004			
Liquid Volume Flow	(m3/h)	52.58	53.23			
Heat Flow	(kW)	1.127e+004	1.064e+004			

Compositions

Fluid Pkg: All

Name	Vapor Product @rSOC	Liq @rSOC	204_b @rSOC	205 @rSOC	204 @rSOC
Comp Mole Frac (H2O)	0.0321	0.0321	0.0037	0.8650	0.1001
Comp Mole Frac (Hydrogen)	0.0050	0.0050	0.0329	0.1350	0.8999
Comp Mole Frac (Nitrogen)	0.7719	0.7719	0.7611	0.0000	0.0000
Comp Mole Frac (Oxygen)	0.1910	0.1910	0.2023	0.0000	0.0000
Name	303 @rSOC	302 @rSOC			
Comp Mole Frac (H2O)	0.0000	0.0000			
Comp Mole Frac (Hydrogen)	0.0000	0.0000			
Comp Mole Frac (Nitrogen)	0.8016	0.7900			
Comp Mole Frac (Oxygen)	0.1984	0.2100			

Energy Streams

Fluid Pkg: All

Name		Q_603 @rSOC	Q_Electrode @rSOC	DC Electric Power Out	Thermal Power Out @	
Heat Flow	(kW)	-2371	0.0000 *	-2371	1317	

Workbook: Water-Hydrogen Separation (H2/H2O)

Material Streams

Fluid Pkg: All

Name		100_DI_Water @H2/H	207_b @H2/H2O	1 @H2/H2O	2 @H2/H2O	3 @H2/H2O
Vapour Fraction		0.0000	1.0000	0.1457	1.0000	0.0000
Temperature	(C)	20.00	248.0	40.00 *	40.00	40.00
Pressure	(kPa)	101.3	101.3	99.27	99.27	99.27
Molar Flow	(kgmole/h)	0.0000	57.54	57.54	8.386	49.16
Mass Flow	(kg/h)	0.0000	912.4	912.4	26.81	885.5
Liquid Volume Flow	(m3/h)	0.0000	1.123	1.123	0.2353	0.8873
Heat Flow	(kW)	0.0000	-3224	-3933	-40.58	-3892
Name		4 @H2/H2O	5 @H2/H2O	8 @H2/H2O	9 @H2/H2O	10 @H2/H2O
Vapour Fraction		1.0000	1.0000 *	0.9354	1.0000	0.0000
Temperature	(C)	183.2	60.50	40.00 *	40.00	40.00
Pressure	(kPa)	278.0	278.0	762.7	762.7	762.7
Molar Flow	(kgmole/h)	8.386	8.386	8.386	7.845	0.5415
Mass Flow	(kg/h)	26.81	26.81	26.81	17.06	9.755
Liquid Volume Flow	(m3/h)	0.2353	0.2353	0.2353	0.2256	9.775e-003
Heat Flow	(kW)	-30.88	-39.20	-47.15	-4.279	-42.87

Licensed to: BATTELLE ENERGY ALLIANCE

* Specified by user.

aspentech	BATTELLE ENERGY ALLIANCE Bedford, MA USA	Case Name: 10MW_HTSE_Demo_Reversible_FC_85_Clean_V12g.hsc Unit Set: FC Mode Date/Time: Thu Dec 1 08:04:56 2022

Workbook: Water-Hydrogen Separation (H2/H2O) (continued)

Material Streams (continued)

Fluid Pkg: All

Name		11 @H2/H2O	12 @H2/H2O	24 @H2/H2O	25 @H2/H2O	26 @H2/H2O
Vapour Fraction		1.0000	1.0000 *	0.9917	0.0000	1.0000
Temperature	(C)	185.4	59.66	40.00 *	40.00	40.00
Pressure	(kPa)	2136	2136	5860	5860	5860
Molar Flow	(kgmole/h)	7.845	7.845	7.845	6.524e-002	7.780
Mass Flow	(kg/h)	17.06	17.06	17.06	1.175	15.88
Liquid Volume Flow	(m3/h)	0.2256	0.2256	0.2256	1.178e-003	0.2244
Heat Flow	(kW)	4.841	-3.056	-5.058	-5.163	0.1053
Name		209_H2Product @H2/	14 @H2/H2O	15 @H2/H2O	19 @H2/H2O	21 @H2/H2O
Vapour Fraction		1.0000	0.0000	1.0000	1.0000	0.0000
Temperature	(C)	40.00 *	40.00	248.0 *	212.7	40.00
Pressure	(kPa)	5860	5860	101.3 *	778.3	109.8
Molar Flow	(kgmole/h)	7.767	1.227e-002	57.54 *	8.386	49.16
Mass Flow	(kg/h)	15.66	0.2211	912.4	26.81	885.5
Liquid Volume Flow	(m3/h)	0.2242	2.215e-004	1.123	0.2353	0.8873
Heat Flow	(kW)	0.9327	-0.9713	-3224	-28.88	-3892
Name		22 @H2/H2O	28 @H2/H2O	29 @H2/H2O	30 @H2/H2O	31 @H2/H2O
Vapour Fraction		0.0000	1.0000	0.0000	0.0000	0.0000
Temperature	(C)	20.00 *	214.2	40.28	40.00	40.00
Pressure	(kPa)	101.3 *	5980	109.8	109.8	5860
Molar Flow	(kgmole/h)	1.000e-003 *	7.845	0.6190	49.77	7.751e-002
Mass Flow	(kg/h)	1.802e-002	17.06	11.15	896.7	1.396
Liquid Volume Flow	(m3/h)	1.805e-005	0.2256	1.117e-002	0.8985	1.399e-003
Heat Flow	(kW)	-7.961e-002	6.709	-49.01	-3941	-6.135
Name		32 @H2/H2O	33 @H2/H2O	101 @H2/H2O	To Water Storage @H	18 @H2/H2O
Vapour Fraction		0.0001	0.0000	0.0000	0.0000	0.0000
Temperature	(C)	41.26	40.00	40.00	40.00	40.14
Pressure	(kPa)	109.8	109.8	109.8 *	109.8	109.8
Molar Flow	(kgmole/h)	7.751e-002	49.78	3.442	46.33	0.5415
Mass Flow	(kg/h)	1.396	896.7	62.00	834.7	9.755
Liquid Volume Flow	(m3/h)	1.399e-003	0.8985	6.213e-002	0.8364	9.775e-003
Heat Flow	(kW)	-6.135	-3941	-272.5	-3669	-42.87
Name		20 @H2/H2O	35 @H2/H2O			
Vapour Fraction		0.0000	0.0000			
Temperature	(C)	20.00	20.00			
Pressure	(kPa)	112.0	109.8			
Molar Flow	(kgmole/h)	1.000e-003	1.000e-003			
Mass Flow	(kg/h)	1.802e-002	1.802e-002			
Liquid Volume Flow	(m3/h)	1.805e-005	1.805e-005			
Heat Flow	(kW)	-7.961e-002	-7.961e-002			

Compositions

Fluid Pkg: All

Name	100_DI_Water @H2/H	207_b @H2/H2O	1 @H2/H2O	2 @H2/H2O	3 @H2/H2O
Comp Mole Frac (H2O)	1.0000	0.8650	0.8650	0.0738	1.0000
Comp Mole Frac (Hydrogen)	0.0000	0.1350	0.1350	0.9262	0.0000
Comp Mole Frac (Nitrogen)	0.0000	0.0000	0.0000	0.0000	0.0000
Comp Mole Frac (Oxygen)	0.0000	0.0000	0.0000	0.0000	0.0000
Name	4 @H2/H2O	5 @H2/H2O	8 @H2/H2O	9 @H2/H2O	10 @H2/H2O
Comp Mole Frac (H2O)	0.0738	0.0738	0.0738	0.0099	1.0000
Comp Mole Frac (Hydrogen)	0.9262	0.9262	0.9262	0.9901	0.0000
Comp Mole Frac (Nitrogen)	0.0000	0.0000	0.0000	0.0000	0.0000
Comp Mole Frac (Oxygen)	0.0000	0.0000	0.0000	0.0000	0.0000

Licensed to: BATTELLE ENERGY ALLIANCE

* Specified by user.

aspentech	BATTELLE ENERGY ALLIANCE Bedford, MA USA	Case Name: 10MW_HTSE_Demo_Reversible_FC_85_Clean_V12g.hsc Unit Set: FC Mode Date/Time: Thu Dec 1 08:04:56 2022

Workbook: Water-Hydrogen Separation (H2/H2O) (continued)

Compositions (continued)

Fluid Pkg: All

Name	11 @H2/H2O	12 @H2/H2O	24 @H2/H2O	25 @H2/H2O	26 @H2/H2O
Comp Mole Frac (H2O)	0.0099	0.0099	0.0099	0.9999	0.0016
Comp Mole Frac (Hydrogen)	0.9901	0.9901	0.9901	0.0001	0.9984
Comp Mole Frac (Nitrogen)	0.0000	0.0000	0.0000	0.0000	0.0000
Comp Mole Frac (Oxygen)	0.0000	0.0000	0.0000	0.0000	0.0000
Name	209_H2Product @H2/	14 @H2/H2O	15 @H2/H2O	19 @H2/H2O	21 @H2/H2O
Comp Mole Frac (H2O)	0.0000	1.0000	0.8650 *	0.0738	1.0000
Comp Mole Frac (Hydrogen)	1.0000	0.0000	0.1350 *	0.9262	0.0000
Comp Mole Frac (Nitrogen)	0.0000	0.0000	0.0000 *	0.0000	0.0000
Comp Mole Frac (Oxygen)	0.0000	0.0000	0.0000 *	0.0000	0.0000
Name	22 @H2/H2O	28 @H2/H2O	29 @H2/H2O	30 @H2/H2O	31 @H2/H2O
Comp Mole Frac (H2O)	1.0000 *	0.0099	1.0000	1.0000	0.9999
Comp Mole Frac (Hydrogen)	0.0000 *	0.9901	0.0000	0.0000	0.0001
Comp Mole Frac (Nitrogen)	0.0000 *	0.0000	0.0000	0.0000	0.0000
Comp Mole Frac (Oxygen)	0.0000 *	0.0000	0.0000	0.0000	0.0000
Name	32 @H2/H2O	33 @H2/H2O	101 @H2/H2O	To Water Storage @H	18 @H2/H2O
Comp Mole Frac (H2O)	0.9999	1.0000	1.0000	1.0000	1.0000
Comp Mole Frac (Hydrogen)	0.0001	0.0000	0.0000	0.0000	0.0000
Comp Mole Frac (Nitrogen)	0.0000	0.0000	0.0000	0.0000	0.0000
Comp Mole Frac (Oxygen)	0.0000	0.0000	0.0000	0.0000	0.0000
Name	20 @H2/H2O	35 @H2/H2O			
Comp Mole Frac (H2O)	1.0000	1.0000			
Comp Mole Frac (Hydrogen)	0.0000	0.0000			
Comp Mole Frac (Nitrogen)	0.0000	0.0000			
Comp Mole Frac (Oxygen)	0.0000	0.0000			

Energy Streams

Fluid Pkg: All

Name		Q-100 @H2/H2O	Q-101 @H2/H2O	Q-102 @H2/H2O	Q-103 @H2/H2O	Q-105 @H2/H2O
Heat Flow	(kW)	708.9	9.692	10.33	8.321	18.28
Name		Q-106 @H2/H2O	Q-107 @H2/H2O	Q-108 @H2/H2O	Q-116 @H2/H2O	Q-104 @H2/H2O
Heat Flow	(kW)	9.120	7.897	9.765	11.77	-0.1439
Name		Q-109 @H2/H2O	Q-110 @H2/H2O			
Heat Flow	(kW)	3.466e-003	7.088e-008			

Licensed to: BATTELLE ENERGY ALLIANCE

* Specified by user.