INL/MIS-18-45365

Conceptual Design Report for the XE-6/7/8 Experiment in the NE Flux Trap

Joe Palmer
James Sterbentz
Paul Murray

June 2018

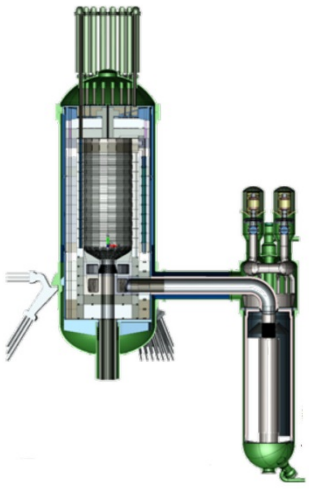

The INL is a U.S. Department of Energy National Laboratory
operated by Battelle Energy Alliance

Idaho National Laboratory

DISCLAIMER

This information was prepared as an account of work sponsored by an agency of the U.S. Government. Neither the U.S. Government nor any agency thereof, nor any of their employees, makes any warranty, expressed or implied, or assumes any legal liability or responsibility for the accuracy, completeness, or usefulness, of any information, apparatus, product, or process disclosed, or represents that its use would not infringe privately owned rights. References herein to any specific commercial product, process, or service by trade name, trade mark, manufacturer, or otherwise, does not necessarily constitute or imply its endorsement, recommendation, or favoring by the U.S. Government or any agency thereof. The views and opinions of authors expressed herein do not necessarily state or reflect those of the U.S. Government or any agency thereof.

INL/MIS-18-45365

Conceptual Design Report for the XE-6/7/8 Experiment in the NE Flux Trap

Joe Palmer
James Sterbentz
Paul Murray

June 2018

Idaho National Laboratory
Idaho Falls, ID 83415

http://www.inl.gov

Prepared for X-energy, LLC,
on behalf of the
U.S. Department of Energy
Under DOE Idaho Operations Office
Contract DE-AC07-05ID14517

Conceptual Design Report for the XE-6/7/8 Experiment in the NE Flux Trap

INL/MIS-18-45365

June 2018

Approved by:

See eCR 661162	
Joe Palmer	Date
Design Engineer/Lead Author	
See eCR 661162	
Michael E. Davenport	Date
Experiment Manager/Checker	
See eCR 661162	
Paul A. Demkowicz	Date
Advanced Reactor Technologies Fuel Programs Director	
See eCR 661162	
Michelle T. Sharp	Date
INL Quality Engineer	

ABSTRACT

X-energy, LLC, has initiated conceptual design of a high-temperature, pebble-bed reactor, and requested that Idaho National Laboratory (INL) prepare a conceptual design for irradiating several fuel pebbles in the Advanced Test Reactor (ATR). The proposed fuel for the X-energy reactor utilizes tristructural-isotropic-coated fuel particles of the same specifications as those used in the U.S. Department of Energy-sponsored Advanced Gas Reactor (AGR) fuel tests, which have been irradiated in the ATR since 2006. The X-energy test has been denoted XE-6/7/8 based on nomenclature from the AGR fuel-test series. Three tests will be combined into one test train: XE-6 constitutes the fuel qualification test, whose aim is to demonstrate fuel performance at the upper end of prototypical reactor conditions; XE-7 is designated a "margin test" and is expected to demonstrate fuel integrity at conditions substantially beyond reactor operating conditions; and XE-8 incorporates designed-to-fail particles in order to release fission products and help validate fission product release codes. The XE series of experiments would consist of multiple separate capsules that would be irradiated simultaneously. Each capsule would have its own inert sweep-gas atmosphere with individual on-line temperature monitoring. The sweep-gas effluent from each capsule would also have online fission product monitoring to track performance of the fuel in each individual capsule during irradiation. INL proposes a design consisting of six capsules, with four capsules housing a single pebble and two with double pebbles for a total of eight pebbles in the test train. The test train diameter is 9.55 cm, while the overall length is about 109 cm. A replaceable external neutron filter would be used to tailor the neutron flux. Instrumentation for the XE-6/7/8 test would be similar to the AGR-5/6/7 test, consisting of approximately seven 1.5 mm thermocouples per capsule and four fluence wires external to the capsule.

The scoping physics and thermal analyses performed for this study indicate that the experiment goals can likely be met in approximately 450 days of irradiation (similar to AGR-5/6/7). Depending on the final design configuration and refinements of the requirements, it may be possible to shorten the irradiation period by one ATR irradiation cycle.

CONTENTS

ABSTRACT iv

ACRONYMS vii

1. INTRODUCTION 1

2. SCOPE 2
   - 2.1 Experiment Objectives 2
   - 2.2 Test Train Overview 4
   - 2.3 In-Core Configuration 6
   - 2.4 Neutronics Evaluations 8
   - 2.5 Thermal Evaluation 11
   - 2.6 Instrumentation 22
   - 2.7 Experiment Sizing and Shipping 23

3. SUMMARY AND RECOMMENDATIONS 23

4. REFERENCES 23

Appendix A – XE-6/7/8 Conceptual Design Drawings 24

FIGURES

Figure 1. The Advanced Test Reactor. 1
Figure 2. XE-8 Elevation View..... 3
Figure 3. ATR cross section showing the proposed location of the XE-6/7/8 test. 5
Figure 4. Elevation view of XE-6/7/8 test train in the ATR vessel (left) and the complete test train assembly (right). 5
Figure 5. XE-6/7/8 test train cross section. 6
Figure 6. In-core arrangement..... 7
Figure 7. End-of-cycle average pebble burnup (% FIMA) versus the ATR power cycle..... 9
Figure 8. End-of-cycle average pebble fast fluence (E_n>0.18 MeV) versus ATR power cycle. 10
Figure 9. Model geometry and finite element mesh in a cutaway view of an experiment capsule..... 12
Figure 10. Temperature (°C) of experiment capsules in cycle 1 in a cutaway view..... 13
Figure 11. Temperature (°C) of capsule 3 using the flat head design, shown in a cutaway view..... 14
Figure 12. Temperature (°C) of capsule 3 using the modified head design, shown in a cutaway view. 15
Figure 13. Temperature (°C) of experiment capsule 3 at the proposed location of a thru-tube, shown in a cutaway view..... 16
Figure 14. Two gas gaps to reduce temperatures in thru tubes. 17
Figure 15. Fraction of fuel particles in each temperature range of XE-6..... 18
Figure 16. Fraction of fuel particles in each temperature range of XE-7..... 19
Figure 17. Fraction of fuel particles in each temperature range of XE-8..... 20
Figure 18. Fraction of helium in temperature control gas in XE-6/7/8..... 21

TABLES

Table 1. Burnup and Fast Fluence Goals for XE-6/7/8..... 2
Table 2. Fuel Particle Temperature Distribution..... 2
Table 3. Volumetric Heat Rate of Fuel Meat. 11
Table 4. Diameter (cm) of Graphite Holders. 22

ACRONYMS

AGR	Advanced Gas Reactor
ATR	Advanced Test Reactor
DTF	designed to fail
FIMA	fissions per initial metal atom
FOR	Functional and Operational Requirements
INL	Idaho National Laboratory
PIE	post irradiation examination
TRISO	tristructural isotropic
TA	time averaged

Conceptual Design Report for the XE-6/7/8 Experiment in the NE Flux Trap

1. INTRODUCTION

X-energy, LLC, is currently working toward a conceptual design for a high-temperature, pebble-bed reactor, and requested that Idaho National Laboratory (INL) prepare a conceptual design for irradiating several fuel pebbles in the Advanced Test Reactor (ATR) (see Figure 1). This report documents the conceptual design.

The proposed X-energy reactor uses tristructural isotropic (TRISO)-coated fuel particles of the same specifications as those used in the U.S. Department of Energy-sponsored Advanced Gas Reactor (AGR) fuel tests, which have been run in the ATR since 2006. The AGR-5/6/7 test is the final test in the series and began irradiation in February 2018. Many features of the AGR-5/6/7 experiment were incorporated into this conceptual design. The X-energy test has been denoted XE-6/7/8 based on nomenclature from the AGR fuel test series. As the name suggests, three basic test objectives will be combined into one test train: XE-6 constitutes the fuel qualification test, whose aim is to demonstrate fuel performance at the upper end of prototypical reactor conditions; XE-7 is designated a "margin test" and its purpose is to demonstrate fuel integrity at conditions substantially beyond reactor operating conditions; and XE-8 incorporates designed-to-fail (DTF) particles in order to release fission products and help validate fission product transport codes. The XE series of experiments would consist of multiple separate capsules that would be irradiated simultaneously. Each capsule would have its own inert sweep-gas atmosphere with individual on-line temperature monitoring. The sweep-gas effluent from each capsule would also have online fission product monitoring to track performance of the fuel in each individual capsule during irradiation. Similar to the AGR-5/6/7 test train, the XE-6/7/8 test will be irradiated in the ATR northeast flux trap irradiation position.

Figure 1. The Advanced Test Reactor.

2. SCOPE

The XE-6/7/8 irradiation experiment will be configured as an instrumented lead, which requires extensive support equipment external to the reactor vessel. However, this conceptual design covers only the in-tank assembly (also known as the test train). It is expected that the AGR-5/6/7 support equipment outside of the reactor vessel will be available for use by the XE-6/7/8 experiment. Conceptual level neutronic and thermal analyses were performed to support preparation of the mechanical design concept and the discussion herein. The analyses should be taken as scoping in nature. Confirmatory analyses are required prior to formal design decisions.

2.1 Experiment Objectives and Constraints

This conceptual design was based on the requirements established in the Functional and Operational Requirements (FOR) [1] for this experiment. A summary of these requirements is provided below:

1. Irradiate 8 spheres (pebbles). [A detailed description of the pebbles and the fuel particles themselves is provided in Section 2.5.]
2. The capsules on the ends of the test train will only contain a single sphere.
3. The XE-8 pebble shall be placed at the bottom of the test train.
4. The XE-7 pebble shall be placed at or near core mid-plane so that it receives the highest neutron flux in the test train.
5. The irradiation shall be completed in 500 full-power days or fewer.
6. Provide multiple thermocouples (six or more) per capsule to help ensure several thermocouples in each capsule survive the entire irradiation period.
7. The maximum particle power limit is 300 mW. This is essentially a restraint on burnup rate and irradiation acceleration.
8. Burnup, fast fluence, and particle temperature distribution goals are provided in Table 1 and Table 2.

Table 1. Burnup and Fast Fluence Goals for XE-6/7/8.

Pebble	**Burnup (%FIMA[a])**	**Fast Fluence (n/cm^2)**
Center four pebbles (three XE-6 and XE-7)	≥16	$\geq 4 \times 10^{21}$ . . . $\leq 7.5 \times 10^{21}$
Four pebbles on ends of test (three XE-6 and XE-8)	≥10	$\geq 2 \times 10^{21}$

[a]Fissions per Initial Metallic Atom.

Table 2. Fuel Particle Temperature Distribution.

Capsules	**Time Averaged (TA) Temperature Distribution (°C)**
XE-6 (4 capsules/6 pebbles)	500 – 700 for about 20% of the fuel particles
	700 – 900 for about 20% of the fuel particles
	900 – 1050 for about 30% of the fuel particles
	1050 – 1200 for about 30% of the fuel particles
XE-7 (1 capsule/1 pebble)	1100 – 1350 for about 80% of the fuel particles
XE-8 (1 capsule/1 pebble)	900 – 1100 for about 80% of the fuel particles

Table 2 represents a goal particle distribution. It is not expected that it will be achieved exactly.

9. The configuration of the XE-8 capsule is provided below:

The XE-8 capsule serves a similar function for X-Energy as AGR-3/4 did for the AGR program, which is to provide fission product migration data in nuclear graphite at prototypical operating temperatures. As such, the configuration of the XE-8 capsule must be different than the others. Figure 2 provides a basic schematic of this capsule.

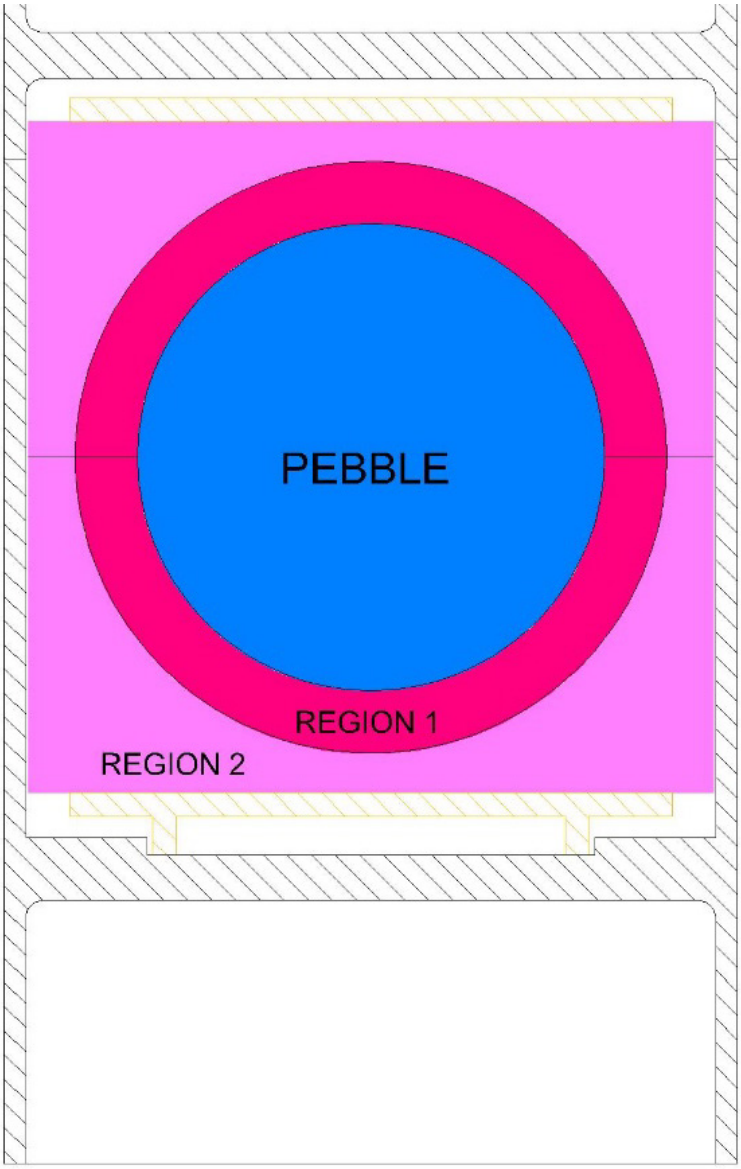

Figure 2. XE-8 Elevation View.

In this layout, a spherical graphite shell denoted as Region 1 in Figure 2, would be placed between the fuel pebble and the cylindrical cups, termed Region 2. Additionally, a small clearance gap would be incorporated between Region 1 and Region 2 to reduce the temperature in Region 2 so that it can serve as a fission product sink (similar to what was done in the AGR-3/4 experiment). This scheme is designed to provide an approximation of a 1-D transport situation. For this capsule, the temperature of interest is likely the Region 1 graphite, rather than the fuel temperature. The goal temperature of Region 1 is

expected to be approximately 800°C+/-50°C, while the Region 2 temperature is approximately 550°C+/-50°C.

Additional constraints (or potential constraints) were identified by the design team during this design study and are listed below:

- **Controllability of the fuel temperature.** Very high heat rates require small control gas gaps. As design gas gaps decrease, machining tolerances and shrinkage of the graphite holders during irradiation become more and more important, causing uncertainties in the true size of the gas gaps and great difficulty controlling temperatures. Based on the AGR series of experiments, the minimum gas gap for effective experiment temperature control is about 0.025 cm. This constraint comes into play in determining the maximum fuel heat rate that can be tolerated.
- **ATR northeast lobe power.** Each of the four outer ATR lobes can be controlled somewhat independently of the others; however, there are limits to the mismatch between lobes. Based on typical ATR operating conditions, the lowest power at which the northeast lobe can be operated is 13 MW. For design purposes, the minimum lobe power is typically assumed to be 14 MW, while the maximum is typically assumed to be approximately 20 MW.

2.2 Test Train Overview

XE-6/7/8 will be an instrumented lead-type experiment with on-line active temperature control and fission product monitoring of the effluent gas. The overall concept for temperature control of the experiment capsules, the temperature control system design, and the fission product monitoring system design are all essentially identical to those used on AGR-3/4 and AGR-5/6/7. The experiment capsules use an insulating gas jacket with variable mixtures of helium and neon sweep gases to control fuel temperatures in each capsule during irradiation.

Instrumented lead experiments are called such because a conduit is established between the in-core portion of the experiment and the vessel boundary—in this case, the top head of the reactor. Because of the large diameter of the fuel specimens (6-cm pebbles), only one high-flux position in the ATR can accommodate the experiment—the northeast flux trap, as shown in Figure 3. There is an existing vessel penetration directly above the northeast flux trap; therefore, the lead-out would consist of straight sections of pipe passing directly upward and out of the ATR vessel, as shown in Figure 4.

The northeast flux trap is an ideal position for this type of fuel experiment because power can be varied over the duration of the test. The lobe power can be increased from 14 to 20 MW. As the fuel fissile content decreases and the heat rate drops, the lobe power can be increased to compensate; however, there is not enough adjustment to totally compensate for the heat-rate drop off, so other means are necessary, such as replaceable filters.

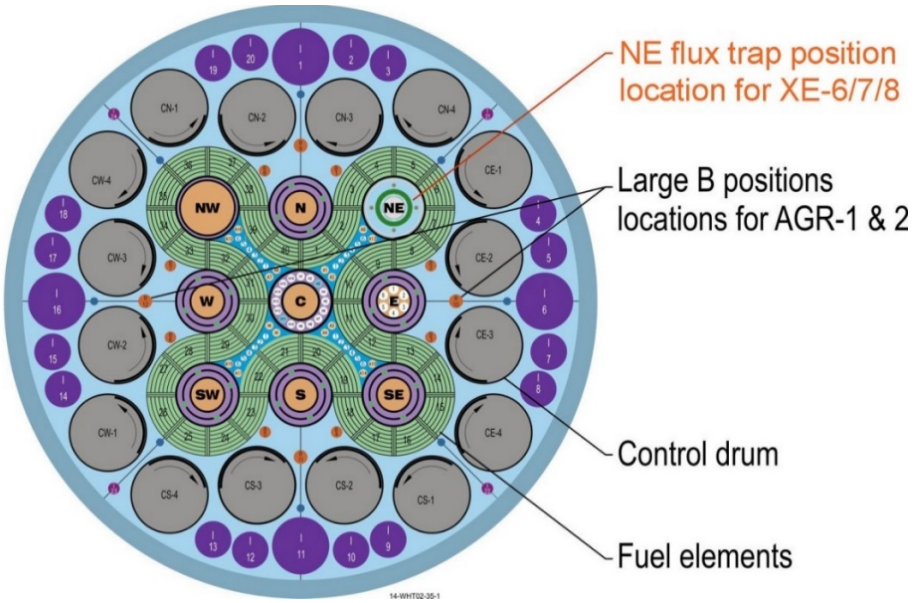

Figure 3. ATR cross section showing the proposed location of the XE-6/7/8 test.

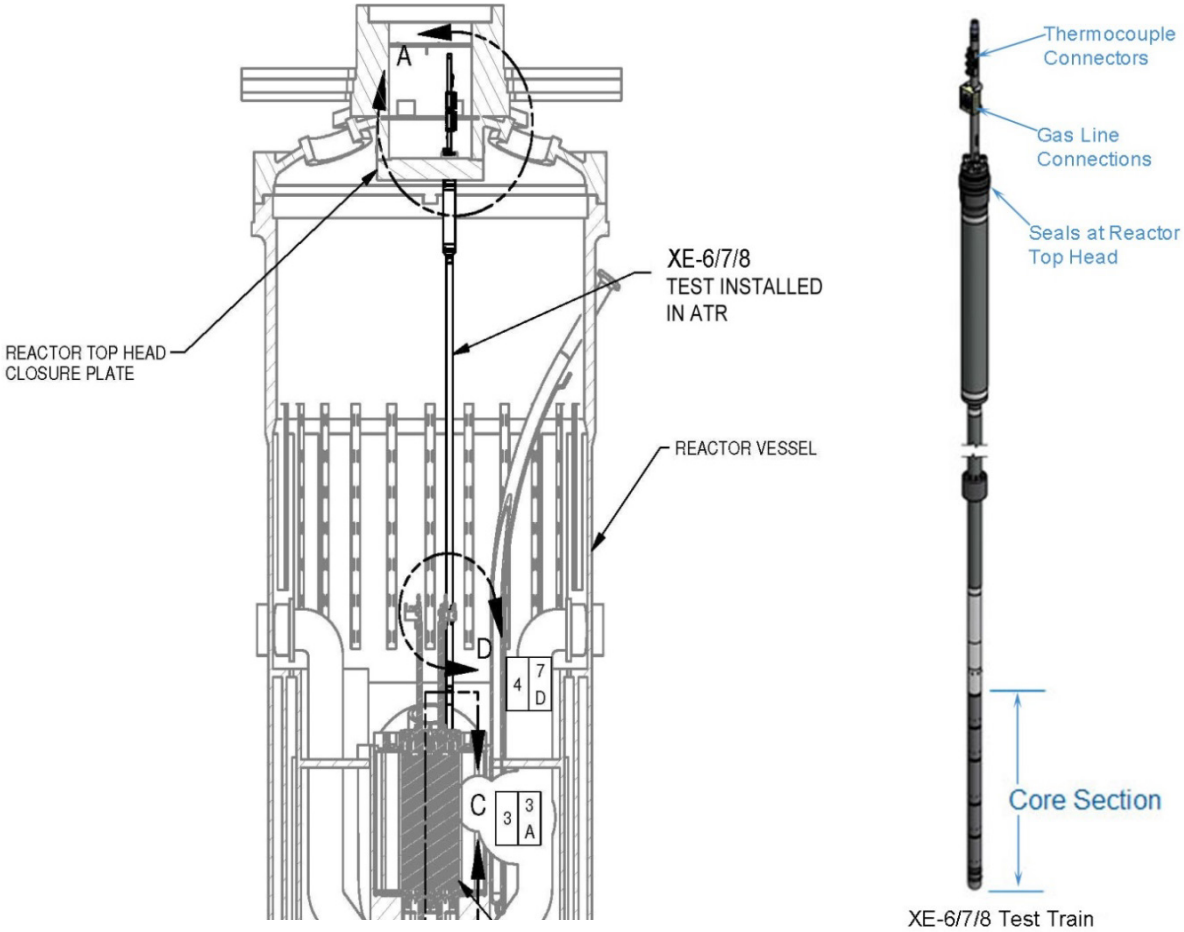

Figure 4. Elevation view of XE-6/7/8 test train in the ATR vessel (left) and the complete test train assembly (right).

2.3 In-Core Configuration

Due to the large diameter of the pebbles, the XE-6/7/8 capsule diameter will be about 35% larger than AGR-5/6/7 (9.55 cm versus 7.02 cm). This larger diameter will displace considerably more water than was displaced by the AGR-3/4 or AGR-5/6/7 experiments, resulting in a harder neutron spectrum, other factors being equal.

The AGR-3/4 and AGR-5/6/7 experiments incorporated external neutron filtering, and this conceptual design incorporates an external filter similar to that used for AGR-5/6/7 as illustrated in Figure 5. The neutronics studies performed for this design indicate that very little filtering is required (or desired – so as not to harden the spectrum too much). The filter consists of simply a stainless steel sleeve. It serves the dual purpose of absorbing some thermal neutrons, and it also supports the test laterally in the flux trap.

This arrangement allows the neutron filtering to be changed (reduced) at the program's discretion as the experiment progresses. For AGR-5/6/7, two different filters have been constructed, and they can be changed to maximize fission rate while staying within a compact heat-rate range that can be accommodated by gas-blend adjustments. The same strategy is proposed for XE-6/7/8 (i.e., it appears that two filters would be sufficient to provide the adjustment necessary to compensate for fuel burnup). The filters for XE-6/7/8 would not incorporate any hafnium, but rather be simply solid stainless steel cylinders of two thicknesses. For the early irradiation cycles, the filter would be 0.45 cm in the middle section and reduced to 0.32 cm on the ends. For the later irradiation cycles, the filter would be 0.32 cm throughout its length. This strategy will have the effect of increasing the burnup on the capsules at the top and bottom relative to the capsules near core mid-plane. See Section 2.4 for further details of the changeout schedule of the two filters.

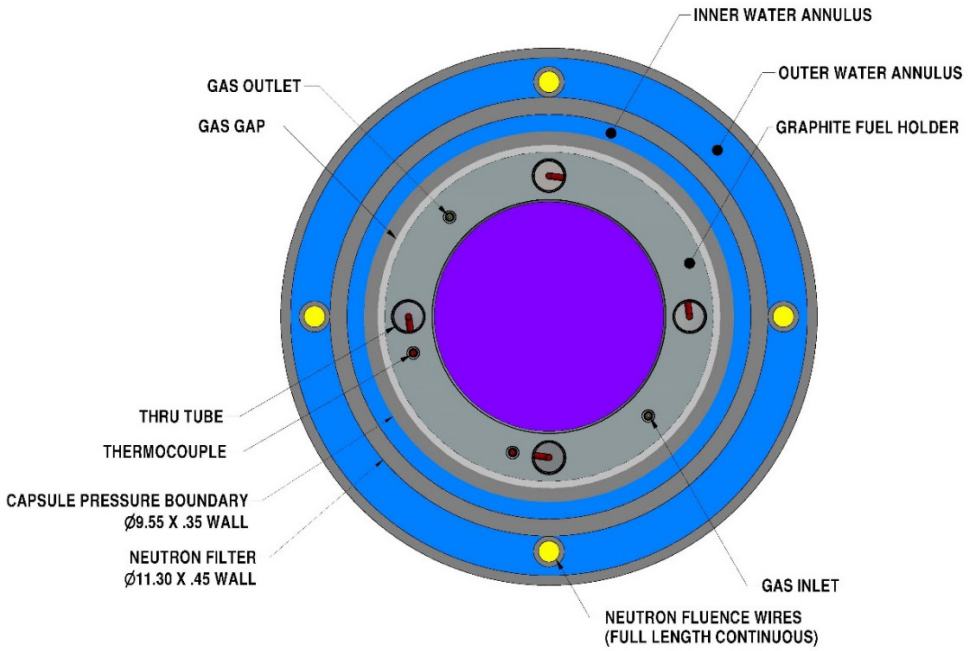

Figure 5. XE-6/7/8 test train cross section.

An elevation cross-section of the in-core portion of the test is shown in Figure 6. There are six separate capsules, with four housing a single pebble and two with double pebbles, for a total of eight pebbles in the test train. In this concept, the test train covers the center 98.8 cm of the 122-cm-tall core. Staying away from the edges of the core reduces flux gradients on the end capsules. The XE-7 capsule is placed just below core mid-plane, which is the highest flux position. The ATR flux is slightly asymmetric, with the highest flux being just below core mid-plane.

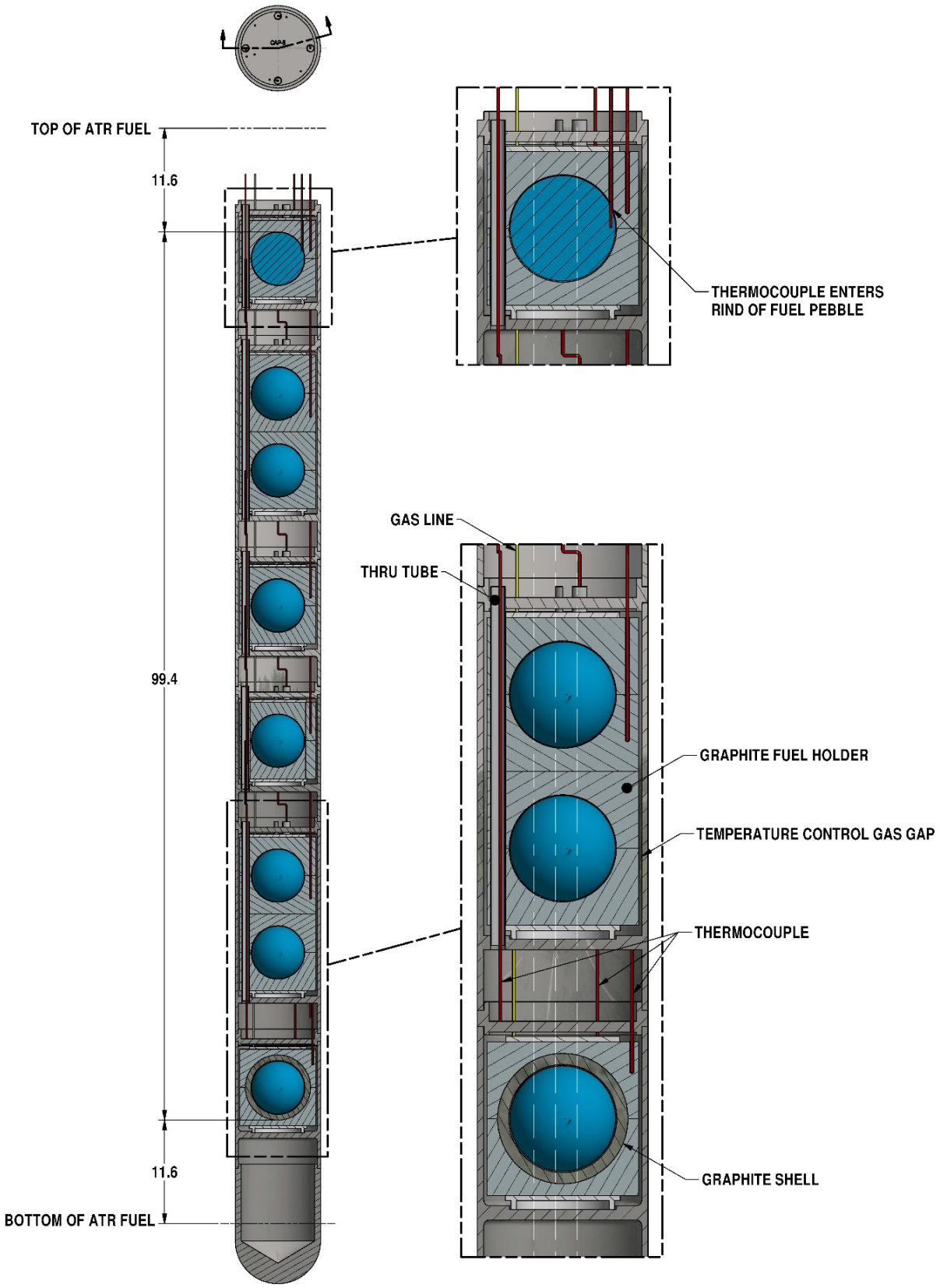

Figure 6. In-core arrangement.

The XE-8 pebble is slated to contain DTF fuel and is placed in the bottom capsule where there are no thru-tubes. This was deemed the best location because thru-tubes tend to break up the symmetry and might create difficulties in measuring the fission product concentrations in the graphite holders. As shown in Figure 6, this bottom capsule will incorporate a spherical graphite shell (built from two half-shells) around the pebble to capture fission products emanating from DTF particles embedded in this particular pebble.

This axial layout incorporates fairly generous plenum regions between capsules, making it easier to bend the thermocouples coming out of the capsule heads and into the thru-tubes. Putting less-severe bends in the thermocouples is thought to improve the thermocouples' survivability; however, if the plenum heights were reduced, it would allow the top and bottom pebbles to be moved a few centimeters closer to core mid-plane with a concomitant increase in neutron flux for these outboard capsules.

2.4 Neutronics Evaluations

Scoping physics calculations were performed based on the conceptual test train design presented in previous sections of this report. Each pebble was modeled with an outer diameter of 6.0 cm. The spherical pebbles have a central fuel meat surrounded by a graphite rind. The 5.0-cm-diameter fuel meat contains TRISO particles embedded in a graphite matrix. The rind is made up of an all graphite matrix with a 0.5-cm thickness.

The TRISO particle design and enrichment are identical to the particle design used in the AGR-5/6/7 irradiation test. The uranium in the 425-μm UCO kernel is enriched to 15.5 wt% U-235. The fuel meat volume (65.45 cm^3) is assumed to contain 18,000 TRISO particles to give a particle packing fraction of approximately 9.15%. Each pebble then contains 1.12 g U-235, 6.08 g U-238, and 7.22 g U total. In the Monte Carlo N-Particle model, the fuel meat was homogenized for simplicity.

The physics calculations were performed for nine 50-day cycles for a total of 450 days of irradiation. The northeast lobe power was gradually increased from 14 MW to 20 MW. For the first eight cycles, the stepped 0.45-cm-thick filter described in Section 2.3 was used. The constant thickness 0.32-cm-thick filter was used only for the final cycle. As the design matures, it is likely that the thinner filter will be scheduled to be put into service earlier, which will increase the burnup rate and reduce the total fast fluence accumulation.

Figure 7 shows the cycle-by-cycle burnup accumulation for each pebble given the lobe powers, as shown in the upper right-hand corner. The pebble locations are denoted by the eight node marks on each of the curves. As illustrated in the figure, the four center pebbles achieve the goal of 16% FIMA by the end of the ninth cycle, or at approximately 450 days of irradiation. This goal could possibly be achieved up to one full cycle earlier by deploying the light filter at perhaps as early as the sixth cycle.

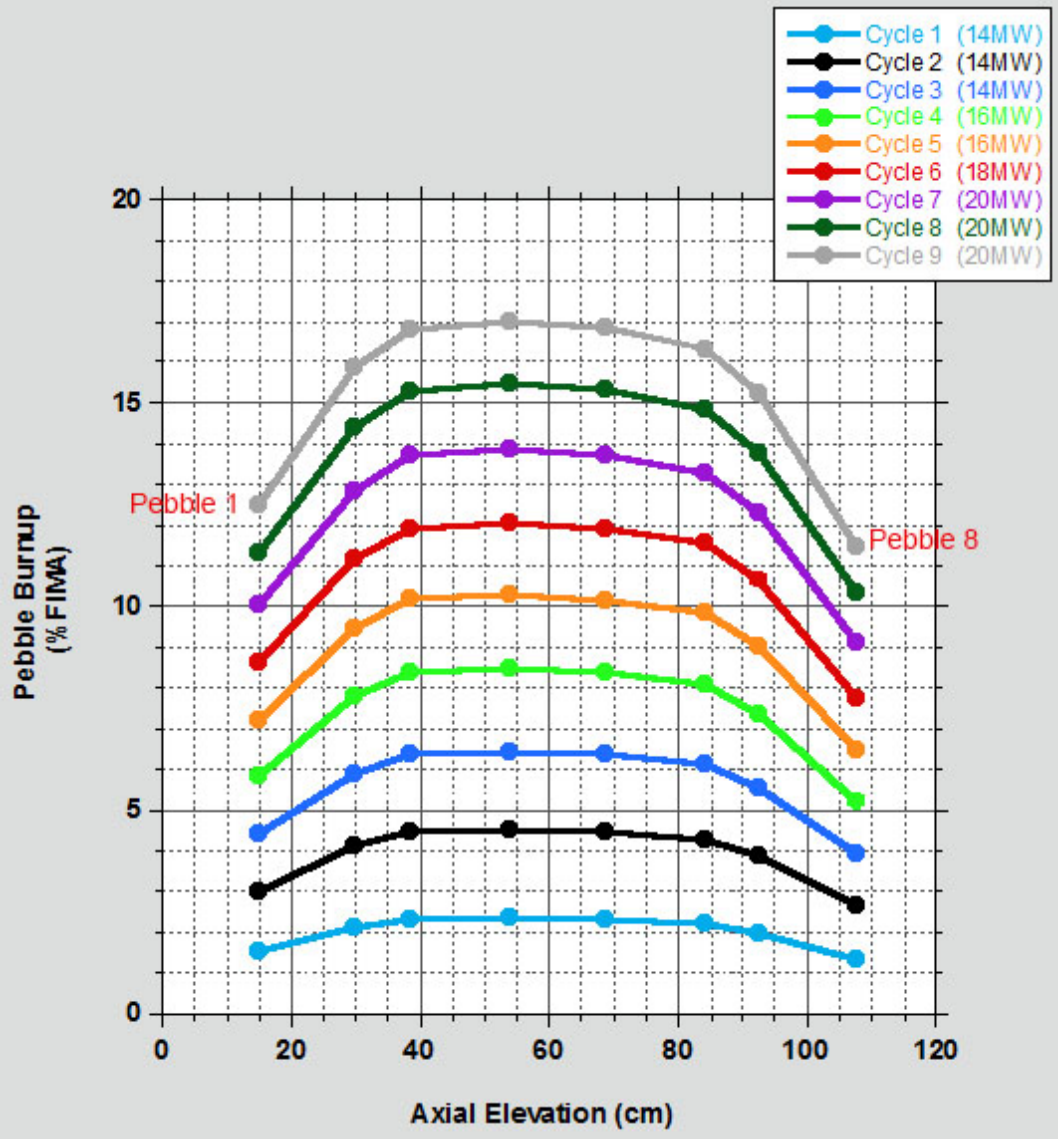

Figure 7. End-of-cycle average pebble burnup (% FIMA) versus the ATR power cycle.

Figure 8 shows the cycle-by-cycle fast fluence accumulation for each pebble given the lobe powers, as shown in the upper right-hand corner. All pebbles reach the minimum fast fluence goals provided in Table 1 at the end of 450 days of irradiation. However, pebble 4 slightly exceeds the 7.5 x 10^{21} n/cm^2-sec fast fluence limit given in Table 1. This problem could be overcome by employing the light filter earlier, which would have the effect of softening the spectrum and allow for reaching the 16% FIMA goal prior to hitting the fast fluence limit.

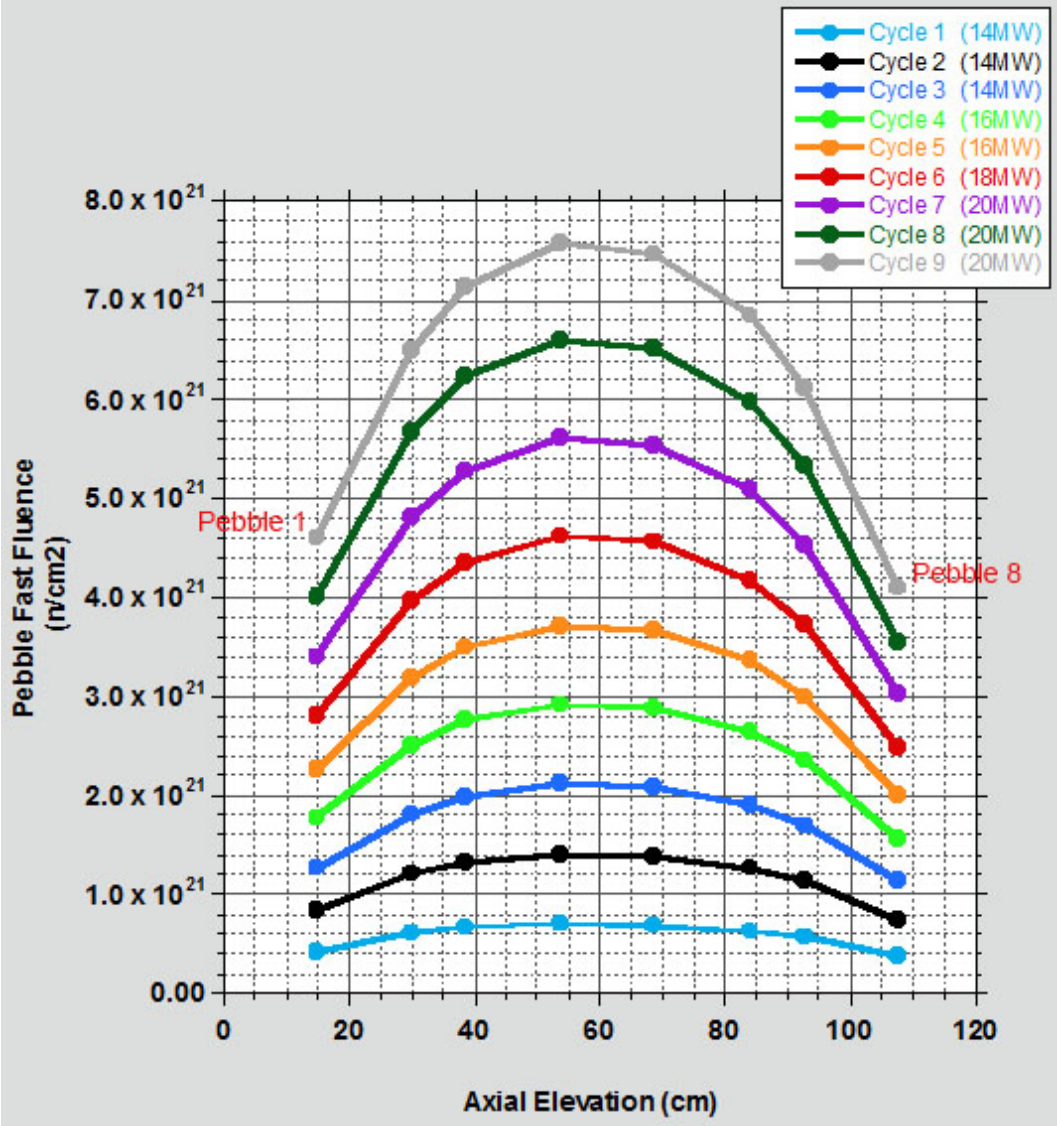

Figure 8. End-of-cycle average pebble fast fluence (E_n>0.18 MeV) versus ATR power cycle.

Calculated volumetric heat rates for each pebble for cycles 1, 5, and 9 are provided in Table 3. Note that these heat rates are reasonably constant for each pebble over the three cycles, indicating that the strategy of increasing power and changing filters produces a fairly flat power profile, which is a great aid in maintaining constant temperature throughout the irradiation period. The maximum volumetric heat rate of 53 W/cc occurs in Pebble 4 in the first cycle. The corresponding particle power for this heat rate is 194 mW, which is nearly identical to the peak particle power in AGR-5/6/7, and is comfortably under the established 300 mW peak particle power limit.

Table 3. Volumetric Heat Rate of Fuel Meat.

Pebble	Cycle 1 14 MW Lobe Power (W/cc)	Cycle 5 16 MW Lobe Power (W/cc)	Cycle 9 20 MW Lobe Power (W/cc)
1	34.4	31.8	30.2
2	46.9	41.1	40.2
3	52.2	44.3	42.5
4	53.0	44.7	44.1
5	52.7	44.7	43.7
6	49.8	42.9	42.0
7	44.5	39.8	39.7
8	30.3	29.1	29.0

2.5 Thermal Evaluation

Scoping thermal calculations were performed to verify that the desired temperature distributions can be achieved by means of reasonably sized temperature control gas gaps (e.g., 0.025 – 0.15 cm). A coupled temperature-displacement analysis was performed in order to account for heat generation, thermal expansion, and irradiation-induced shrinkage of graphite. The effect of the helium-neon gas mixture on the gas gap conductance and the effect of neutron fluence on the thermal conductivity and shrinkage of the graphite was included in the analysis. The results of the analysis were used to determine the gas gaps and gas mixtures needed to attain the desired temperature distribution in the pebbles.

The thermal analysis was performed at three irradiation cycles (i.e., the first, fifth, and ninth cycles) to encompass the anticipated conditions of reactor power and neutron fluence occurring during irradiation. The heat generation rates used in the analysis were obtained from a separate reactor physics analysis described in the previous section. The ATR northeast lobe power was assumed to be 14 MW in cycle 1, 16 MW in cycle 5, and 20 MW in cycle 9 in order to compensate for diminishing heat generation due to fuel burnup.

The desired temperature distribution in the pebbles, given in terms of the desired fraction of fuel particles in each temperature range, is provided in Table 2.

The experiment consists of 6 capsules, each of which is designed to contribute fuel particles in a particular temperature range. XE-6 consists of capsules 2, 4, 5, and 6; XE-7 consists of capsule 3; and XE-8 consists of capsule 1. Capsules 2 and 5 contain two pebbles, while all other capsules contain one pebble.

A finite element temperature-displacement analysis of the XE-6/7/8 experiment was performed using ABAQUS. A cutaway view of the model geometry and finite element mesh of one of the experiment capsules is shown in Figure 9. In this figure, the capsule is blue, the holder is green, the pebble is red, and the zirconia insulators are orange. The neutron filter and primary coolant are not shown. A cutaway view of the temperature distribution throughout the entire in-core test train at the middle of the first cycle is shown in Figure 10.

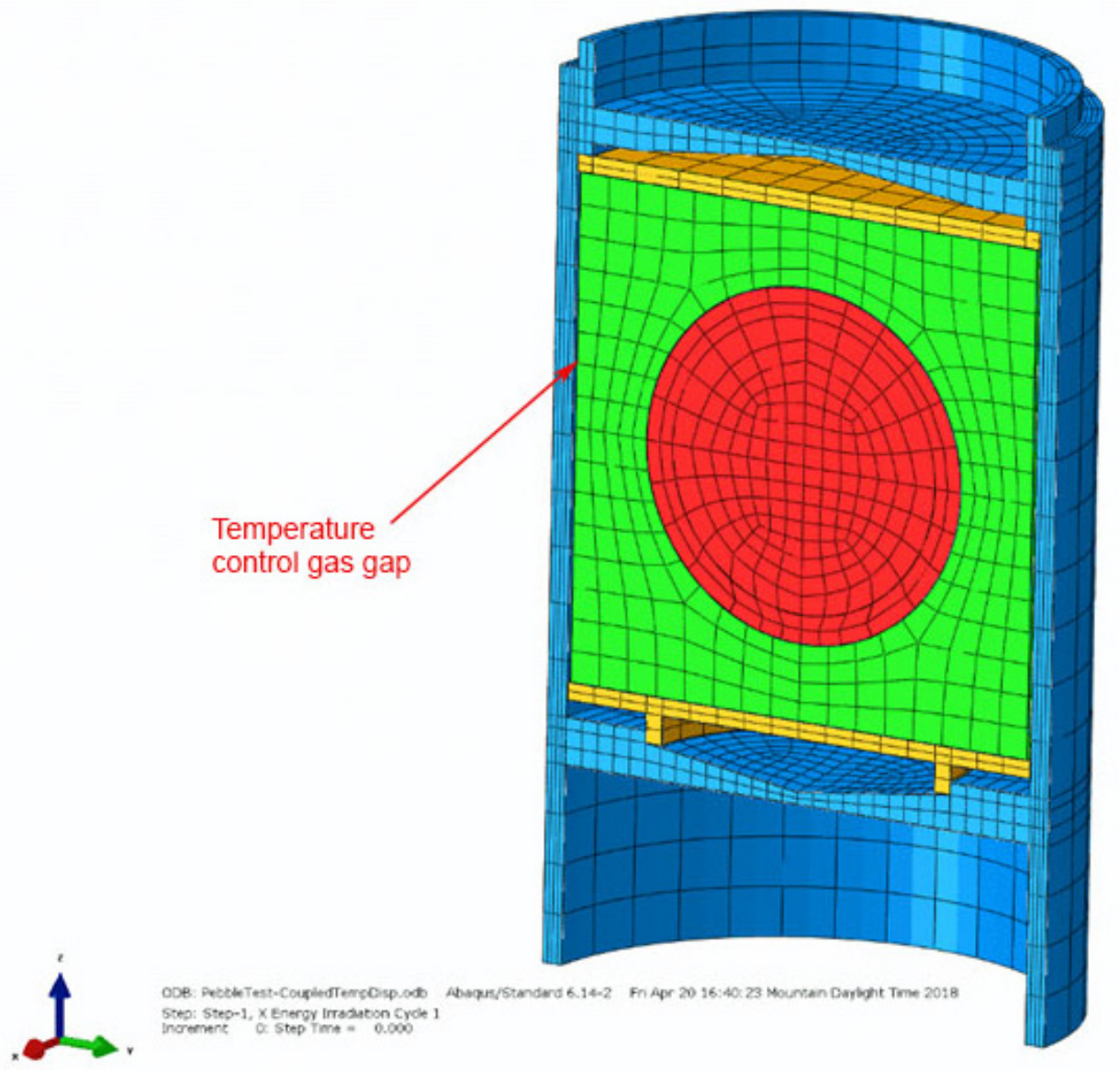

Figure 9. Model geometry and finite element mesh in a cutaway view of an experiment capsule.

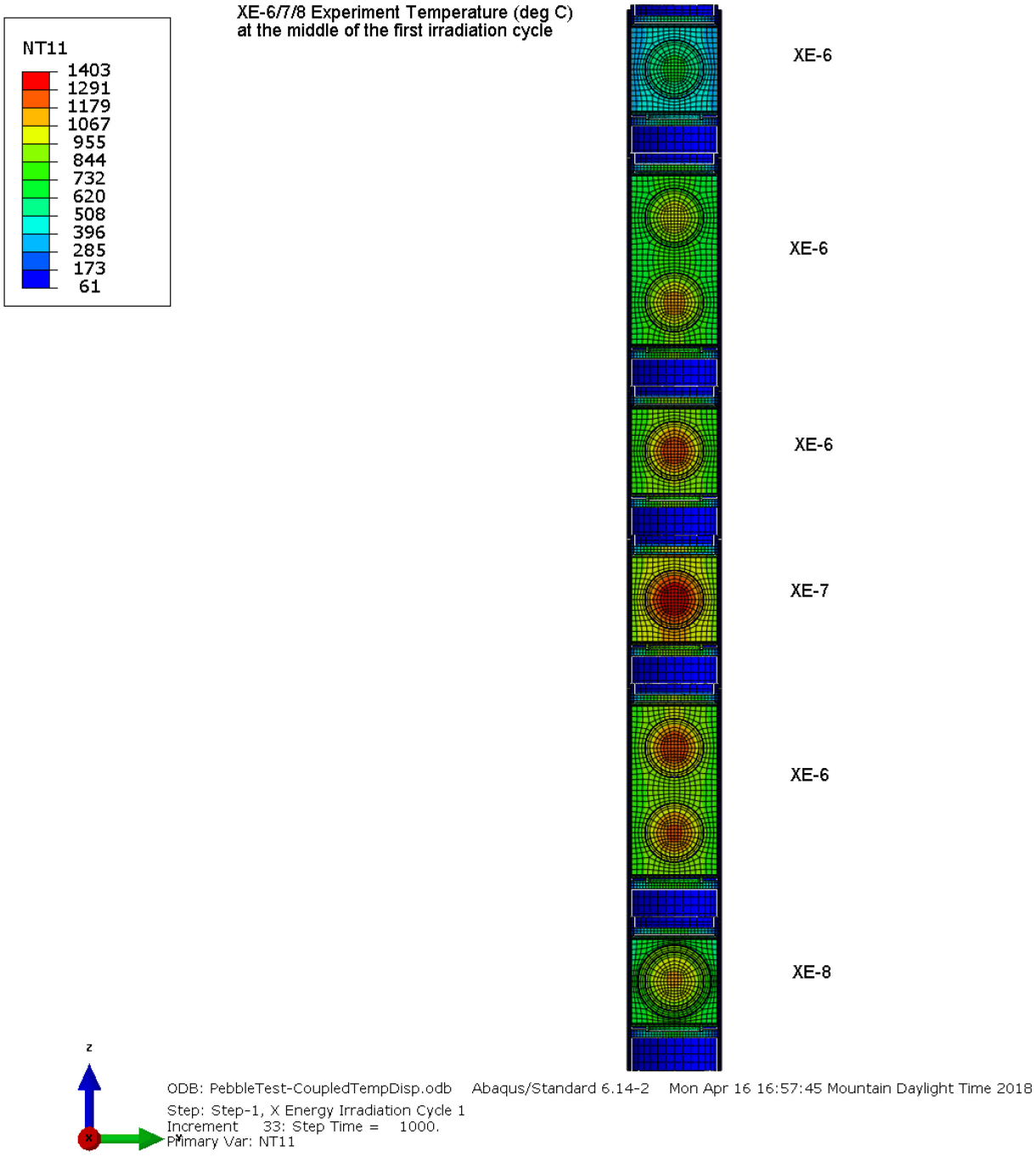

Figure 10. Temperature (°C) of experiment capsules in cycle 1 in a cutaway view.

A closer examination of the finite element analysis results revealed that the temperature of the capsule top and bottom heads was too high due to gamma heating of the heads during high power cycles. The original design included stainless steel flat heads. A cutaway view of the temperature of capsule 3 during cycle 9 at 20 MW NE lobe power using the flat head design is shown in Figure 11. The maximum temperature of the heads is 1345°C, which is too close to the melting temperature of stainless steel (1400°C).

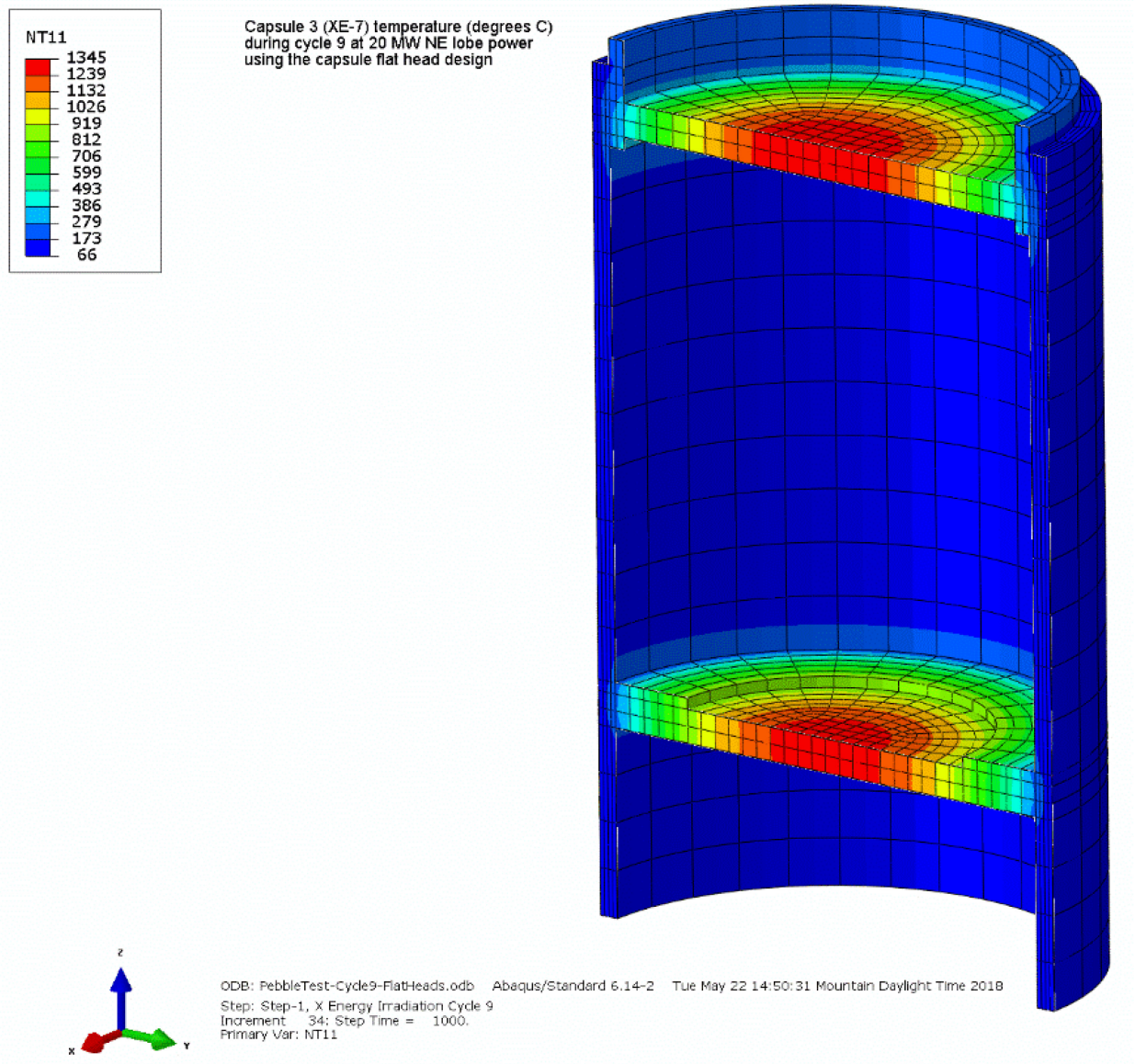

Figure 11. Temperature (°C) of capsule 3 using the flat head design, shown in a cutaway view.

The ABAQUS model was modified to reduce the thickness at the center of the heads and replace the stainless steel with nickel in the center portion of the head. Nickel has a higher thermal conductivity and a higher melting temperature than stainless steel. A cutaway view of the temperature of capsule 3 during cycle 9 at 20 MW NE lobe power using the modified head design is shown in Figure 12. In this case, the maximum temperature of the heads is 899°C, so the modified design is effective in reducing the temperature to an acceptable level. However, this particular bi-metallic head design has not previously been incorporated into any INL reactor experiment; as such, some engineering and weld procedure development will need to be done as a part of the final design process.

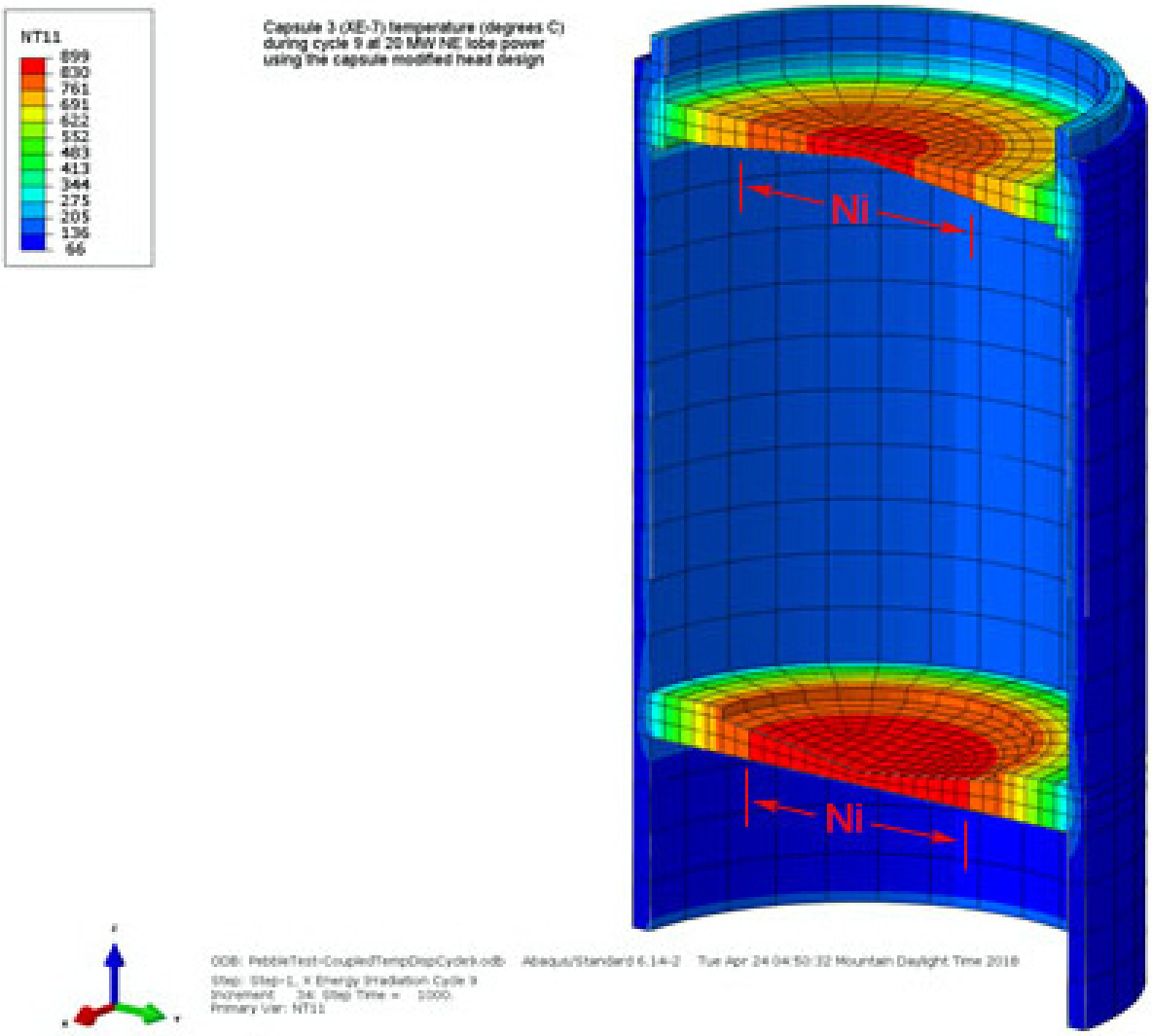

Figure 12. Temperature (°C) of capsule 3 using the modified head design, shown in a cutaway view.

Thru-tubes containing thermocouples and gas-lines pass through the capsule and graphite holder. A cutaway view of the temperature of capsule 3 during cycle 1 at 14 MW NE lobe power is shown in Figure 13. The approximate location of a thru-tube is shown in the figure. The maximum temperature of the capsule components at the location of a thru-tube is approximately 1200°C, which is at least 200°C too hot for the thermocouples passing through it. The proposed solution to this problem is to separate the graphite fuel holder into two pieces as was done for AGR-7. As shown in Figure 14, a small clearance would be established between the two layers, which will serve to reduce the temperature in the outer layer (as it did for AGR-7).

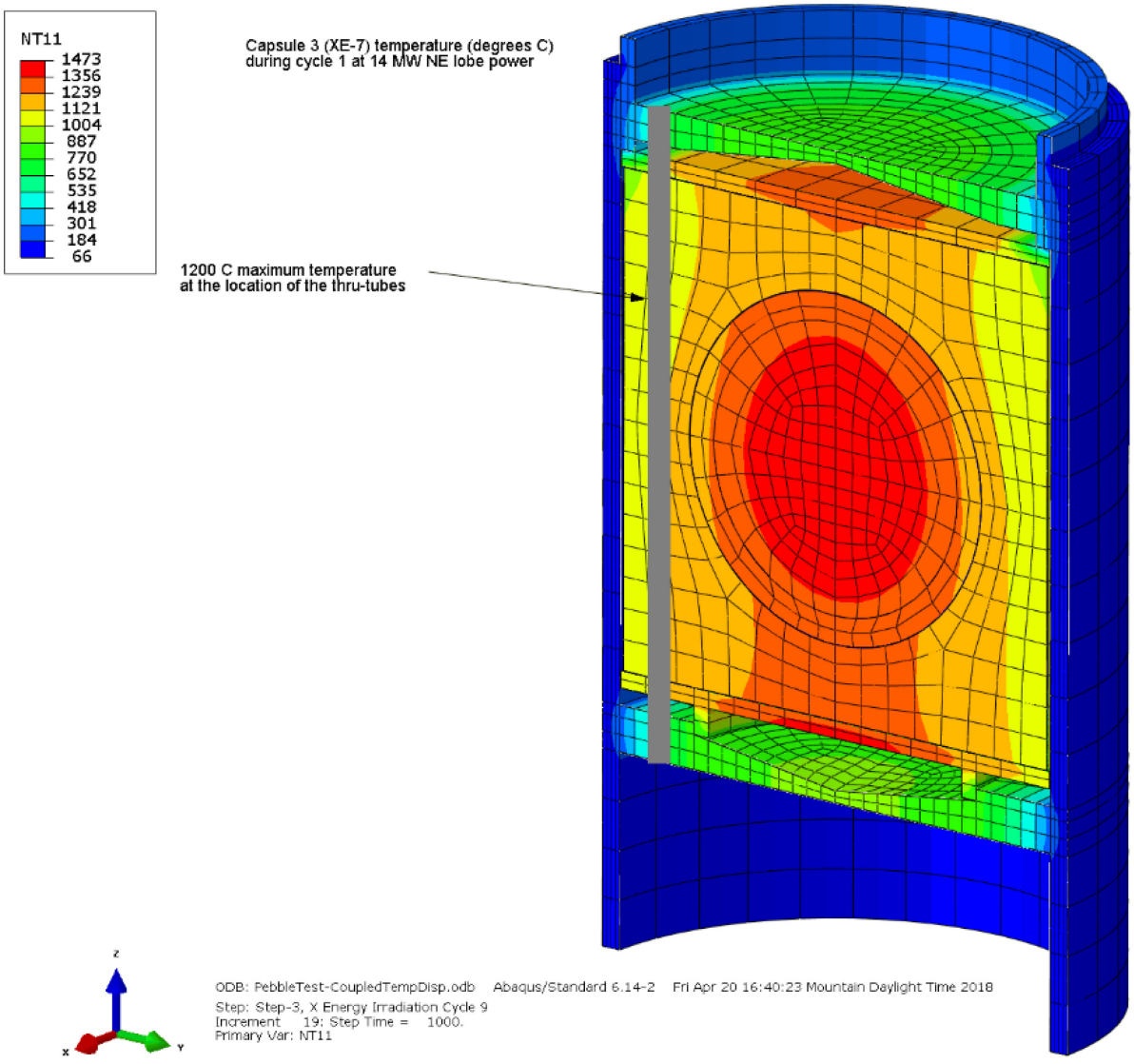

Figure 13. Temperature (°C) of experiment capsule 3 at the proposed location of a thru-tube, shown in a cutaway view.

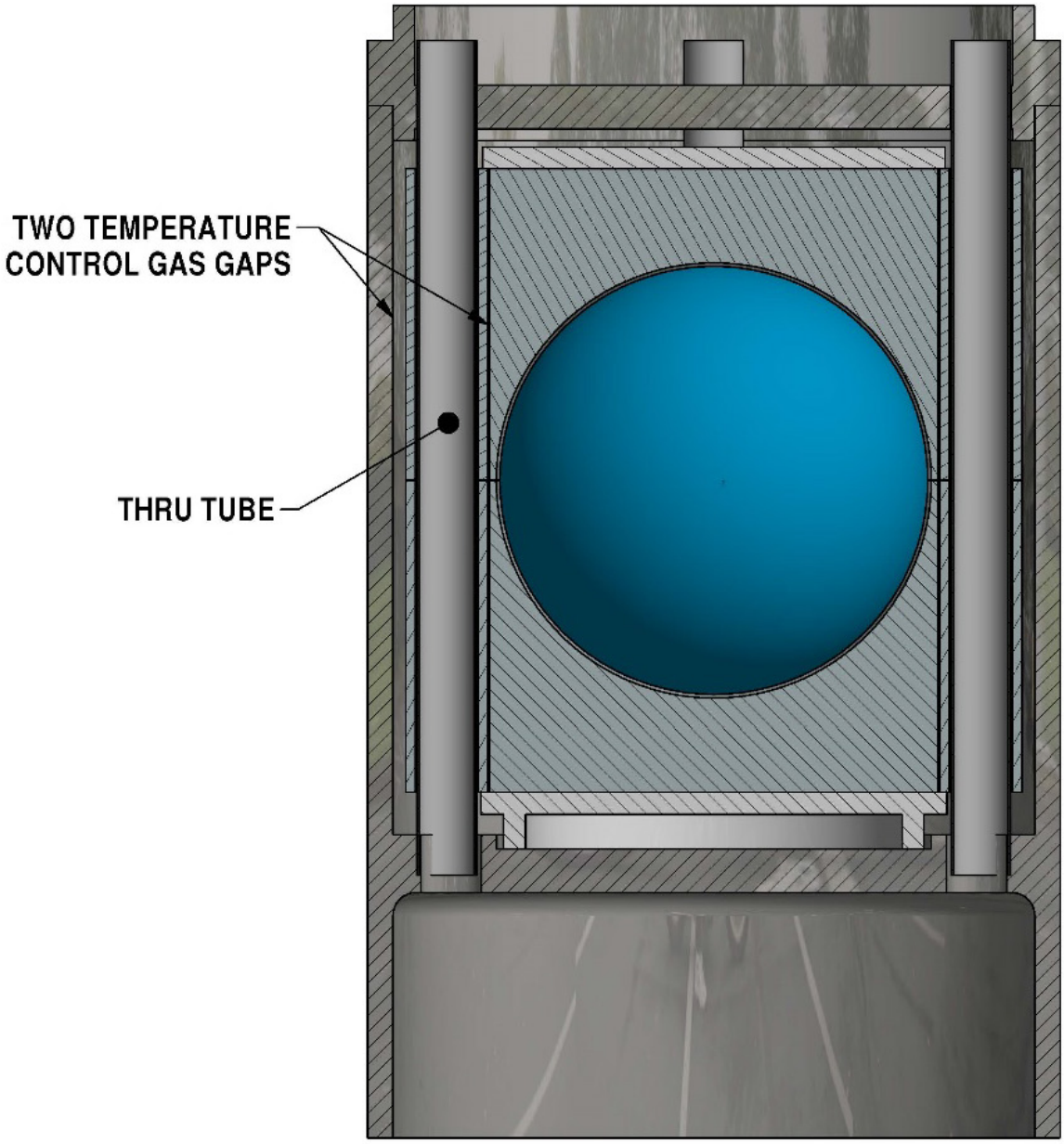

Figure 14. Two gas gaps to reduce temperatures in thru-tubes.

Graphs of the fraction of particles in each temperature range at cycles 1, 5, and 9 are shown in Figure 15 (XE-6), Figure 16 (XE-7), and Figure 17 (XE-8), respectively. A graph of the gas mixtures needed at cycles 1, 5, and 9 is shown in Figure 18. The results of this analysis indicate the gas mixtures can be adjusted to maintain desired pebble temperature distribution. The irradiation begins with using a 50% helium/50% neon gas mixture in all capsules. The helium content increases during irradiation to compensate for irradiation-induced shrinkage of graphite and the reduction in thermal conductivity of graphite. Note that cycle 9 at 20 MW lobe power may require close to 100% helium to control the pebble temperature. However, the actual gas mixtures used during irradiation may be different from those given here, due to uncertainty in the gas gaps and reactor power. Additional adjustments available during irradiation include the lobe power and the thickness of the neutron filter.

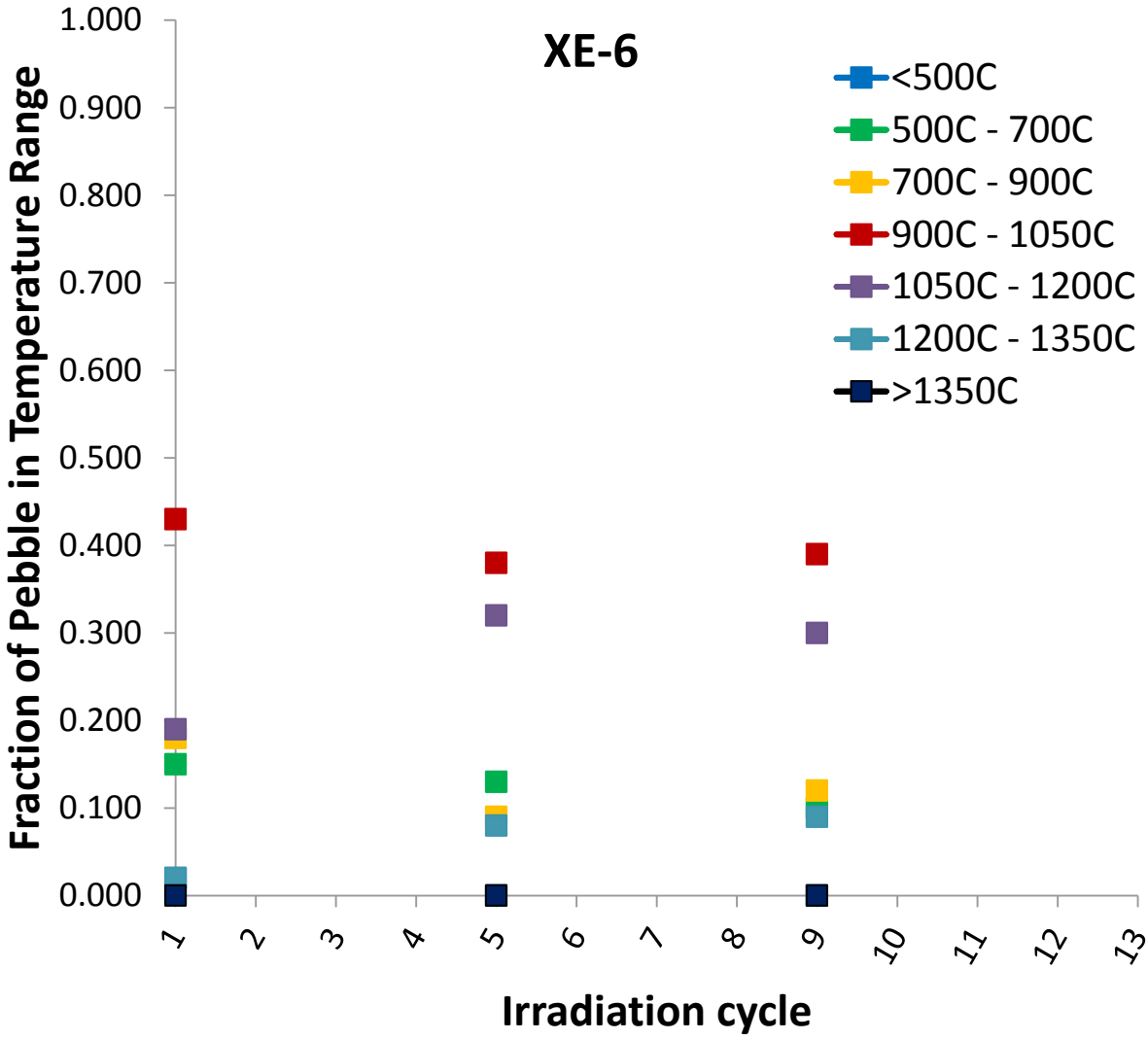

Figure 15. Fraction of fuel particles in each temperature range of XE-6.

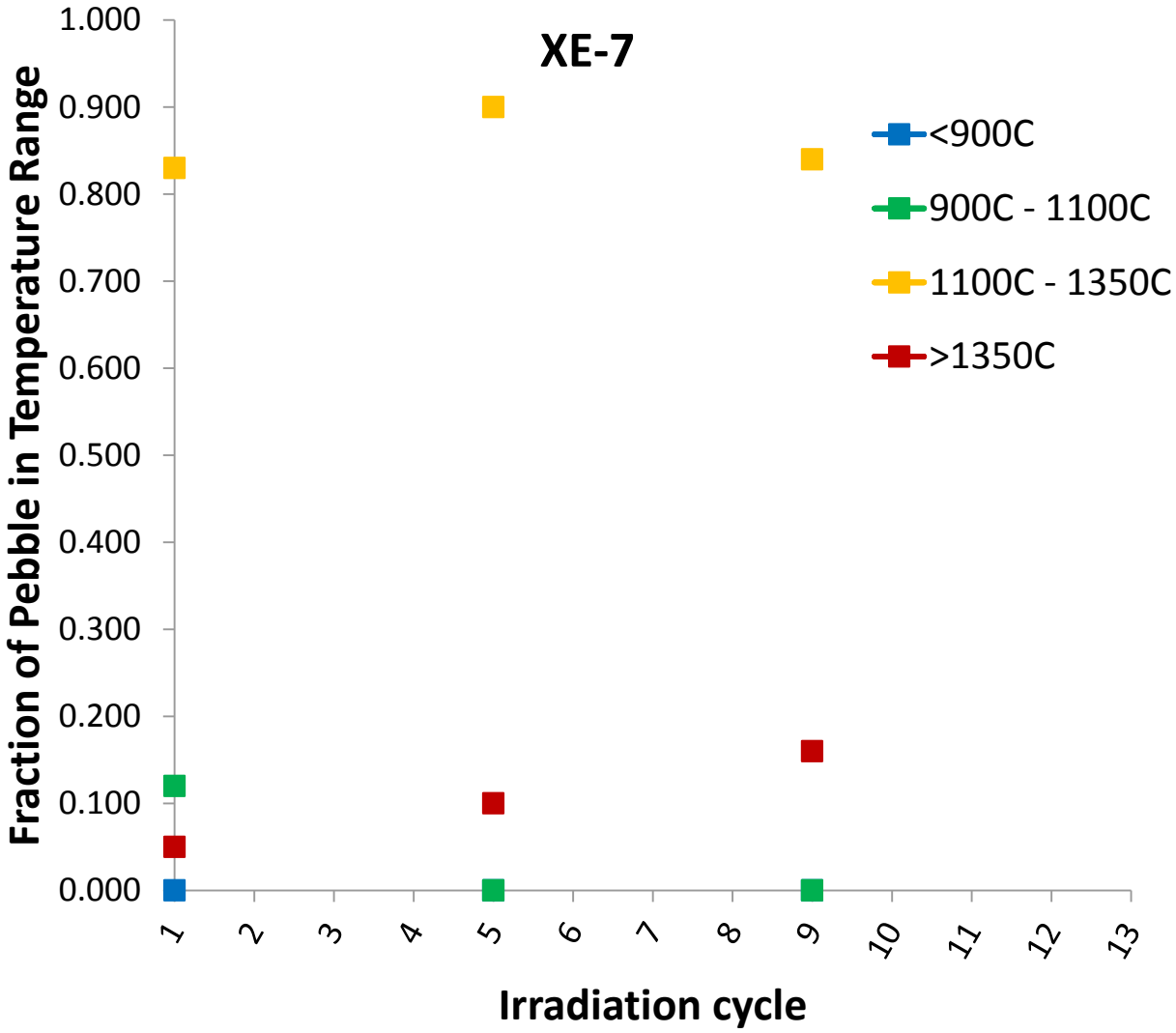

Figure 16. Fraction of fuel particles in each temperature range of XE-7.

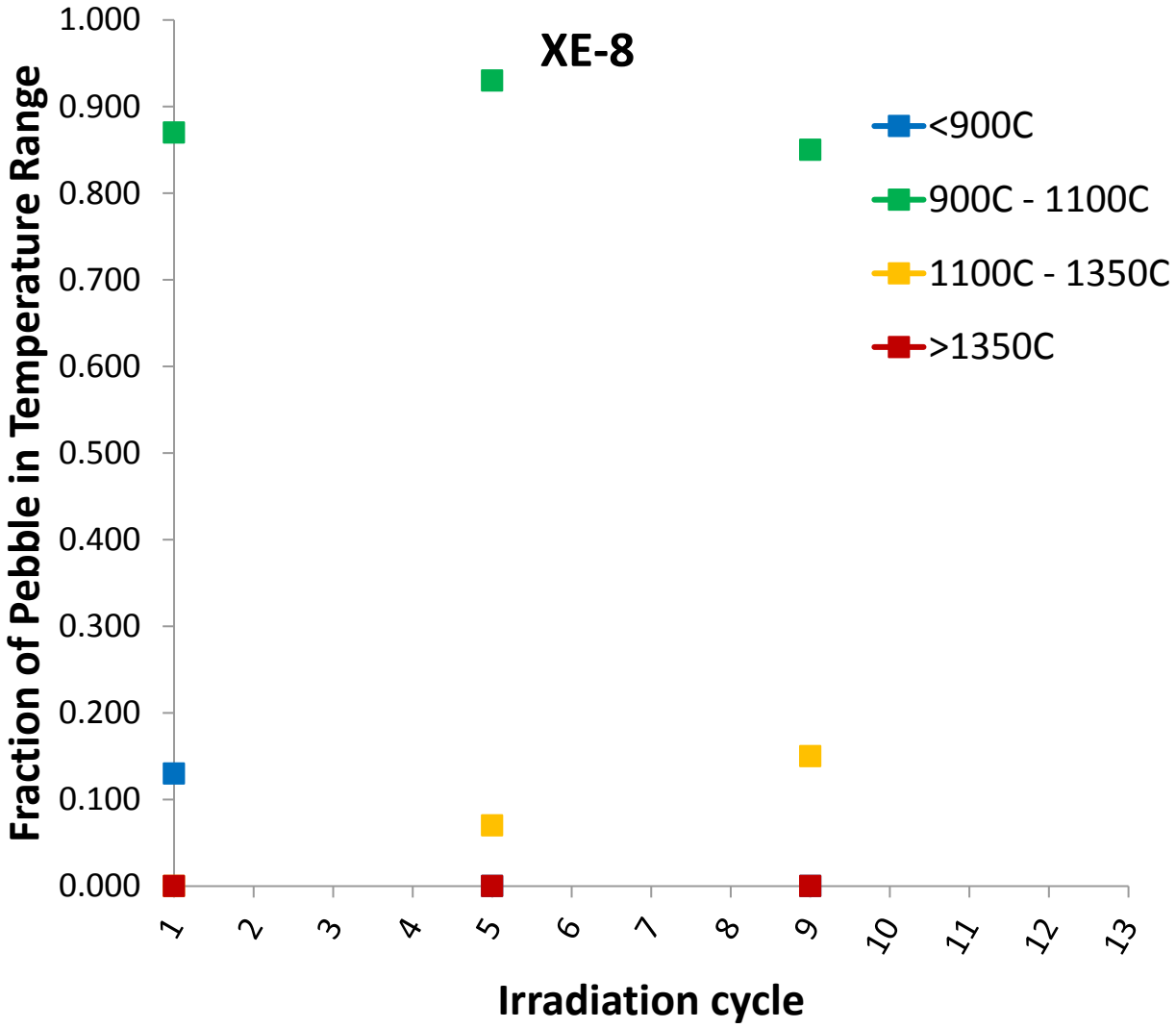

Figure 17. Fraction of fuel particles in each temperature range of XE-8.

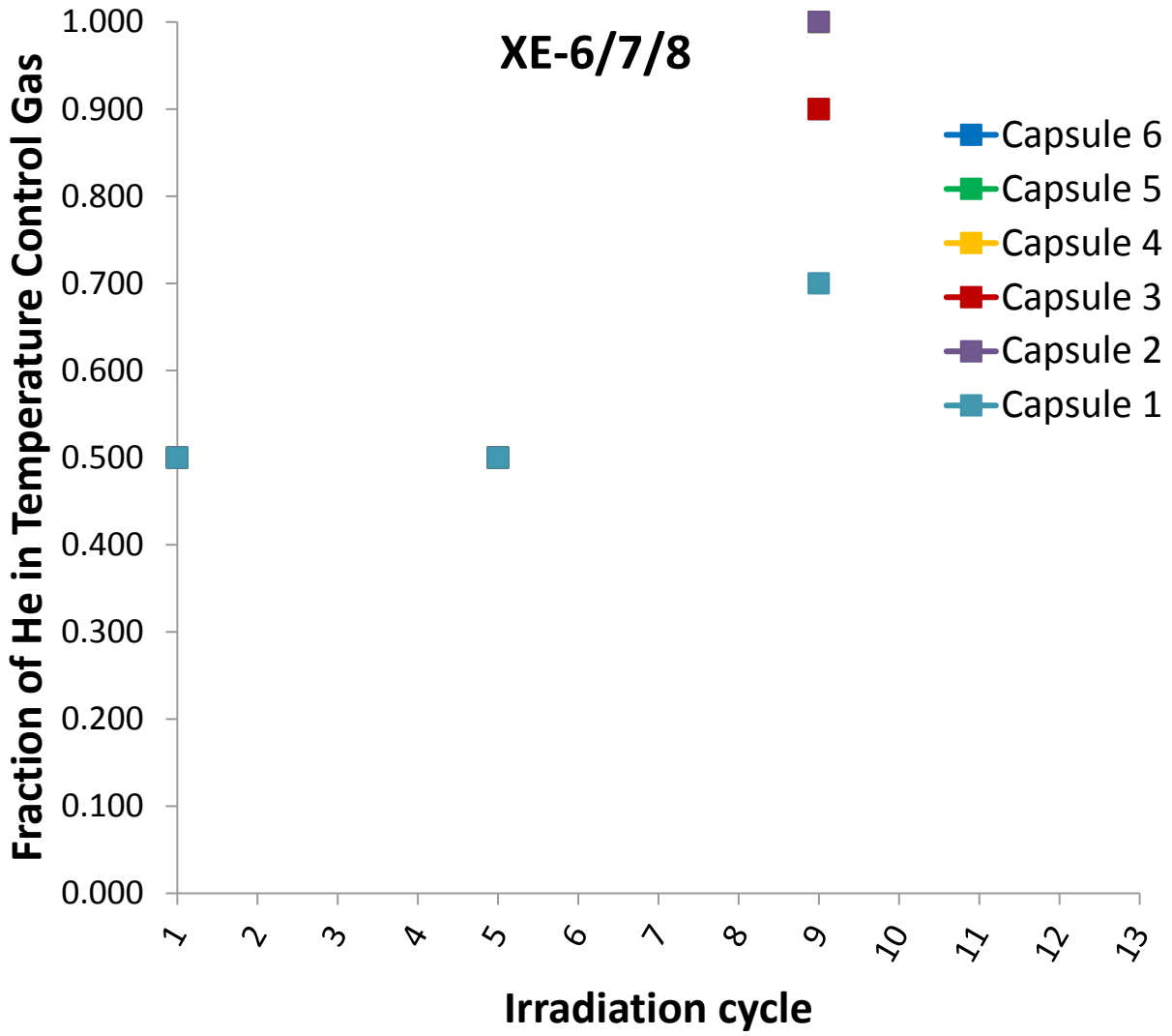

Figure 18. Fraction of helium in temperature control gas in XE-6/7/8.

This analysis shows that the desired temperature distribution can be attained using gas gap temperature control with a separate He-Ne temperature control gas in each capsule. The inside and outside diameter of the graphite holders at room temperature are shown in Table 4. The holder in capsule 1 consists of an inner ring and an outer ring with a gas gap between them. The diameter of the pebbles is 6.00 cm, while the inside diameter of the capsules is 8.85 cm. The resulting temperature control gas gaps at room temperature varies from 0.025 to 0.075 cm, which is within the desired range previously stated.

Table 4. Diameter (cm) of Graphite Holders.

Holder Number	Experiment	Outside Diameter at Room Temperature	Inside Diameter at Room Temperature
1 (inner layer)	XE-8	7.356	6.010
1 (outer layer)	XE-8	8.725	7.417
2	XE-6	8.725	6.010
3	XE-7	8.700	6.010
4	XE-6	8.750	6.010
5	XE-6	8.760	6.010
6	XE-6	8.801	6.010

2.6 Instrumentation

The design illustrated in Section 2.3 (see also Figure 14) relies on the concept of "thru-tubes," which are metallic conduits passing through the bodies of the capsules to provide a means of routing the thermocouples from lower capsules up through the bodies of upper capsules. The thru-tubes are used to separate the gas in the capsules from the gas in the thru-tubes and the gas plenums between the capsules. This arrangement allows for each capsule to have an isolated gas environment. The number and size of the thermocouples are limited by the number and diameter of the thru-tubes. This layout assumed four thru-tubes with outer and inner diameters of 8.3 mm and 7.7 mm, respectively. With this design, there is sufficient room for seven or eight 1.5-mm-diameter thermocouples and two 1.5-mm gas lines in each capsule. Figure 5 shows typical locations of thermocouples and gas lines.

In Figure 6, the thermocouples are shown terminating in the both the graphite holders a few millimeters from the pebbles themselves, and in the unfueled rind material of the pebbles. Placing a few thermocouples in the rinds of some of the pebbles will be advantageous from the standpoint of reducing the uncertainty in the pebble fuel temperature. However, this would complicate assembly and perhaps post irradiation examination (PIE) as well.

In either location, depending on the thermocouple sheath material, it may be necessary to place a protective sleeve between the thermocouple sheath and the graphite holder (or pebble rind). Experience with AGR-2 indicates that TRISO particle SiC failure can be induced by nickel attack. The source of the nickel was apparently from thermocouples placed within 2 or 3 mm of the fuel compacts. Because nearly all thermocouple sheaths incorporate large amounts of nickel (or other first-row transition elements), the AGR series of experiments took the precaution of sleeving all standard thermocouples with refractory metal tubes.

Figure 5 shows neutron fluence wires within tubes welded at four locations around the filter housing. An advantage of placing the fluence wires external to the experiment is that they can be read after each reactor cycle and compared with the as-run physics analyses. This arrangement was adopted for the AGR-3/4 and AGR-5/6/7 experiments.

Including fluence wires within the capsules themselves is also an option. Having fluence wires closer to the fuel is definitely and advantage, however they cannot be read until the test is entirely completed. Retrieval and reading and reading of the wires would add to the PIE cost.

2.7 Experiment Sizing and Shipping

It is assumed that the XE-6/7/8 experiment will be shipped to the Materials and Fuels Complex on the INL Site for PIE. The AGR-3/4 test was shipped using the GE-2000 cask with an INL cask liner. AGR-5/6/7 is planned to be shipped using an INL site-only cask called the Dry Transfer Cubicle Cask Insert (DTCCI) with overpack, which is likely to be the shipping method that will work best for XE-6/7/8. Due to the length of the GE-2000 cask, the maximum test length that could be shipped for AGR-3/4 was about 109 cm. AGR-3/4 was longer than this and required two shipments because it had to be cut into two pieces. Plans are to also cut AGR-5/6/7 into two pieces and ship them separately. In the current layout, XE-6/7/8 is about 15 cm shorter than the two AGR tests. As such, it may be possible to ship the entire core section in one shipment.

3. SUMMARY AND RECOMMENDATIONS

1. The in-core design consists of six capsules with four capsules housing a single pebble and two with double pebbles for a total of eight pebbles in the test train. The test train diameter is 9.55 cm, and the overall in-core length is about 109 cm.
2. The above-core portion of the test would be very similar to AGR-5/6/7, with some components being identical to the AGR-5/6/7 experiment.
3. Instrumentation for the XE-6/7/8 test would be similar to the AGR-5/6/7 test, consisting of approximately seven 1.5-mm thermocouples per capsule and four fluence wires external to the capsule.
4. The scoping physics and thermal analyses performed for this study indicate that the experiment goals likely can be met in about 450 days of irradiation. Depending on the final design configuration, refinements to the neutron filter schedule, and the ATR NE lobe powers, it may be possible to shorten the irradiation period by one ATR cycle.
5. INL recommends that the XE-8 capsule be placed at the bottom of the test train because this position does not require thru-tubes and would allow for a spherical graphite shell to be placed around the pebble to capture the fission products.
6. Two changes to the basic capsule design were identified as a part of the thermal analysis: (1) the XE-7 graphite fuel holder will need to be separated into two pieces to produce a temperature reduction in the region of the holder where the thru-tubes pass; and (2) the capsule heads must be modified to reduce the centerline temperature; one method identified to do this is by welding in a tapered nickel insert.

4. REFERENCES

1. FOR-368, “Functional and Operational Requirements for the XE-6/7/8 Irradiation Experiment,” Rev. 0, June 2018.

Appendix A –
XE-6/7/8 Conceptual Design Drawings

INL.idw Rev 4

NOTES:

1. EXPERIMENT DESIGNED FOR INSTALLATION INTO ATR NORTHEAST FLUX TRAP IRRADIATION POSITION AND TO UTILIZE THE NORTHEAST TOP HEAD CLOSURE.
2. LUBRICATE O-RINGS WITH A LIGHT COAT OF ITEM 19 (SILICONE GREASE).
3. LUBRICATE THREADS WITH ITEM 20 (NEOLUBE).
4. TORQUE NUTS AND SOCKET HEAD CAP SCREWS TO 50-55 FT/LBS IN A CROSS PATTERN.
5. VERIFY ITEM 8 (TEST TRAIN ASSEMBLY) AND ITEM 9 (LOOP SEAL FLANGE) ARE NOT COCKED BY MEASURING AT SEVERAL LOCATIONS AROUND ITEM 8 (TEST TRAIN ASSEMBLY) AND ITEM 9 (LOOP SEAL FLANGE). VERIFY SAME DIMENSIONS AT ALL MEASURED LOCATIONS.
6. ENSURE ITEMS 3, 4, OR 5 (NEUTRON FILTER) ARE SEATED PROPERLY ON LOWER SUPPORT ASSEMBLY BY VERIFYING THAT THE INDICATING STRIPE(S) ARE FACING SOUTHWEST. ALSO VERIFY THE .25" DIMENSION SHOWN IN VIEW C.
7. PROGRAM MAY ELECT TO USE EITHER TWO NEUTRON FILTER ASSEMBLIES TO MEET IRRADIATION OBJECTIVES.

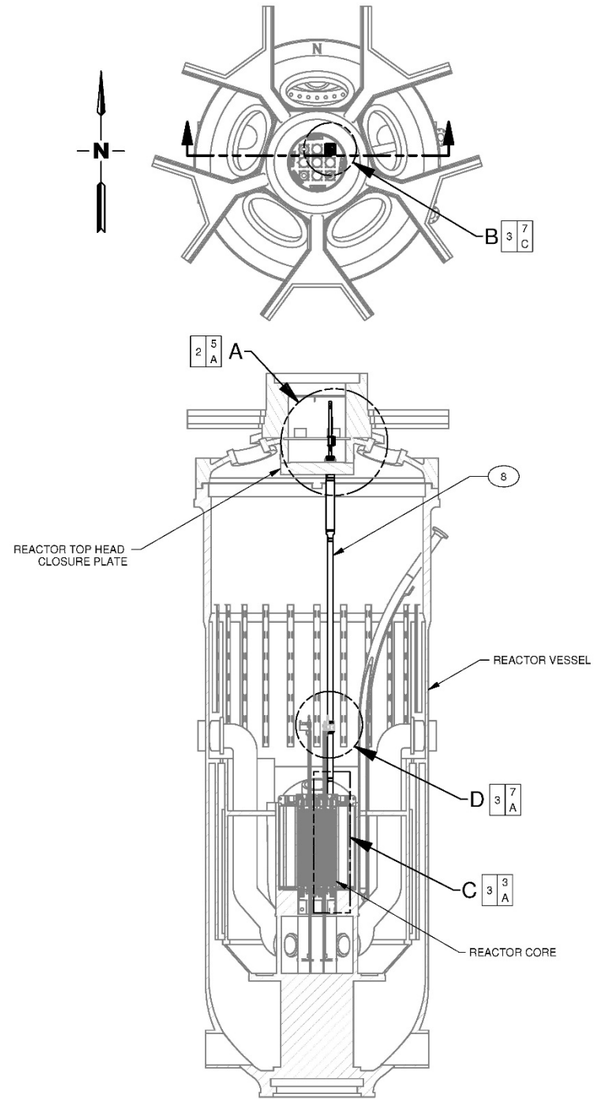

-1 INSTALLATION

3	2	1	SHEET
-	-	-	REV

REV STATUS OF SHEETS

REVISIONS

REV	DESCRIPTION	EFFECTIVE DATE:

QTY REQD	PART OR IDENTIFYING NO.	NOMENCLATURE OR DESCRIPTION	MATERIAL/SPECIFICATION OR VENDOR NAME	ITEM NO.
	-1	PARTS LIST		
	-1	X-ENERGY 6/7/8 INSTALLATION		1
				2
1	602750-1	IN-CORE NEUTRON FILTER FINAL ASSEMBLY		3
1	605063-1	IN-CORE LIGHT NEUTRON FILTER FINAL ASSEMBLY		4
1	606610-1	FILTER ASSEMBLY		5
4	035561-BR	FLUX WIRE ASSEMBLY		7
1	602694-1	ATR NGNP DEBRIS CAN ASSEMBLY AND DETAILS		6
1	606602-1	TEST TRAIN ASSEMBLY		8
1	119996-13	LOOP SEAL FLANGE		9
4	119996-17	STUD (3/4-10 NC-2A)		10
4	119996-20	NUT, HEX (3/4-10 NC-2B)		11
				12
				13
3	2-259	O-RING, ETHYLENE - PROPYLENE COMPOUND E515-80	PARKER HANNIFIN CORP	14
1	2-255	O-RING, ETHYLENE - PROPYLENE COMPOUND E515-80	PARKER HANNIFIN CORP	15
				16
				17
				18
AR		SILICONE GREASE	COML GRADE	19
AR		NEOLUBE	HURON INDUSTRIES	20

DASH NO.	
-1	FINAL
	NEXT ASSY
APPLICATION	

DIMENSIONING AND SYMBOLOGY PER ASME Y14.5M AND STD-10011
UNLESS OTHERWISE SPECIFIED
SURFACE ROUGHNESS $\sqrt{}$
DIMENSIONS AND TOLERANCES ARE IN INCHES
CLEARANCES: .X = ± .1
DECIMALS: .XX = ± .03, .XXX = ± .012
FRACTIONS ± 1/8
ANGULAR = ±2°
DO NOT SCALE DRAWING

REQUESTER: D. STACEY
RESP ENGR: J. PALMER
DESIGN: J. PALMER
DRAWN: J. TONKS
PROJECT NO.
SPCL CODE
FOR REVIEW/APPROVAL SIGNATURES SEE ECR NO.
EFFECTIVE DATE:

Idaho National Laboratory

ATR
X-ENERGY 6/7/8
IN-VESSEL
INSTALLATION

SIZE	CAGE CODE	INDEX CODE NUMBER				DWG-	REV
		AREA	TYPE	CL	ORIG		
D	01MF3	533	0670	96	081	606601	-

SCALE: 1/40 SHEET 1 OF 3

ATR2080

Path: C:\Inv\Root\Projects\ATR\Reactor Experiments\X-Energy Pebble Irradiation\606601.idw
File:606601.R-
Date:06/20/2018

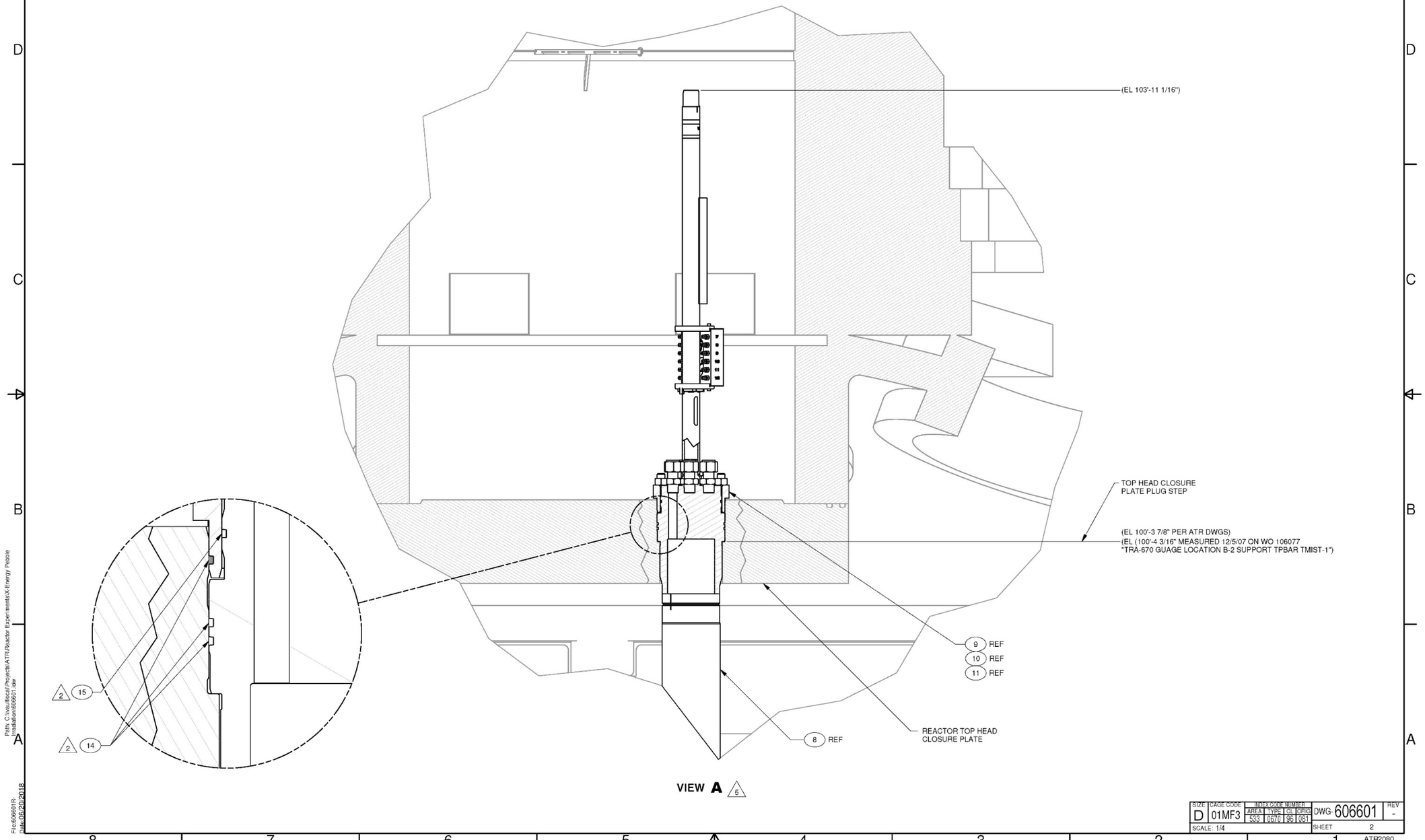
(EL 103'-11 1/16")
TOP HEAD CLOSURE
PLATE PLUG STEP
(EL 100'-3 7/8" PER ATR DWGS)
(EL (100'-4 3/16" MEASURED 12/5/07 ON WO 106077
"TRA-670 GUAGE LOCATION B-2 SUPPORT TPBAR TMIST-1")
9 REF
10 REF
11 REF
8 REF
REACTOR TOP HEAD
CLOSURE PLATE
2 15
2 14
VIEW A 5
Path: C:\vault\local\Projects\ATR\Reactor Experiments\X-Energy Pebble Installation\606601.dw
File:606601R-
Date:05/20/2018
SIZE D
CAGE CODE 01MF3
INDEX CODE NUMBER AREA 533 TYPE 0570 CL 95 ORIG 051
DWG- 606601
REV -
SCALE: 1/4
SHEET 2
ATR2080

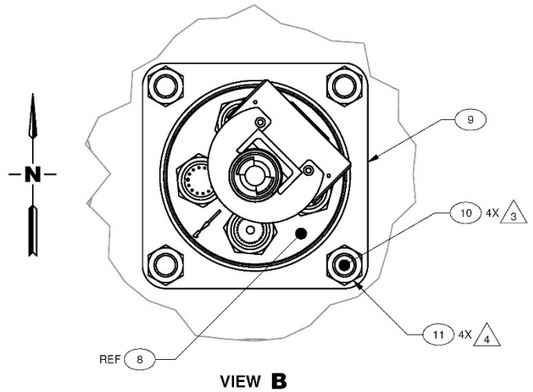

VIEW B
SCALE: 1/2

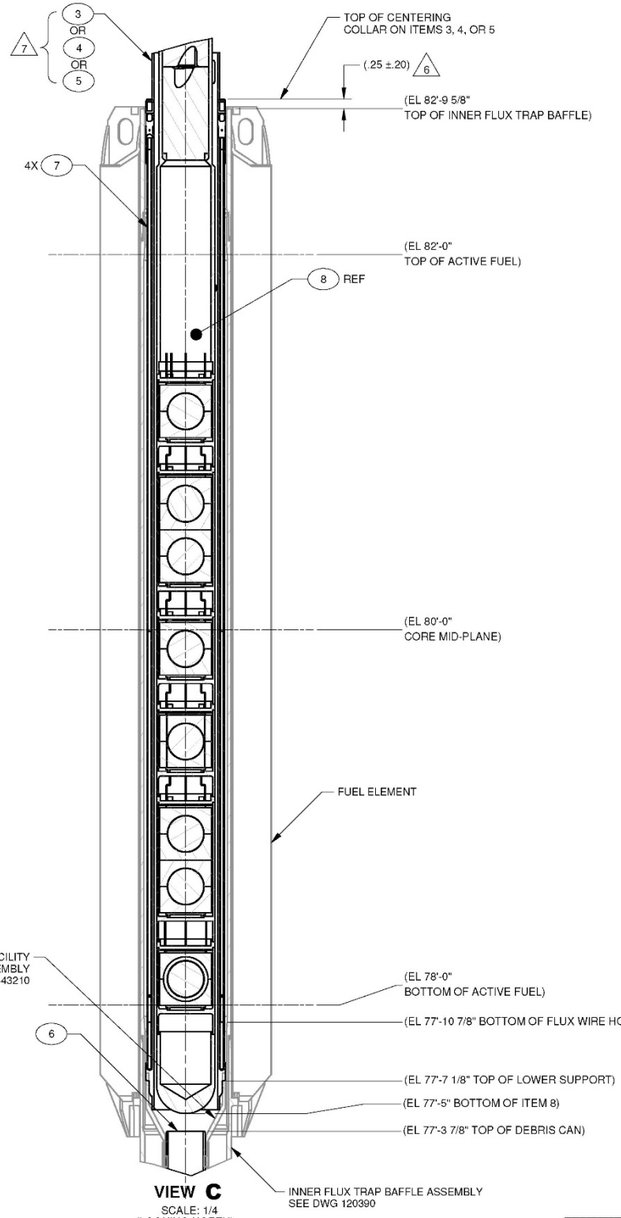

VIEW C
SCALE: 1/4
(LOOKING NORTH)

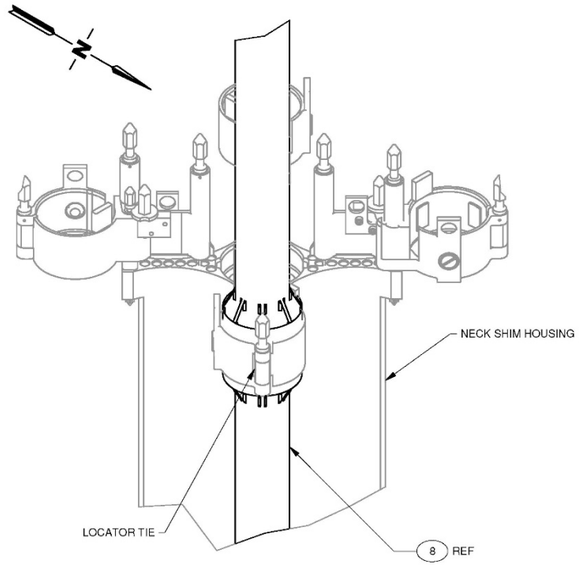

VIEW D
SCALE: 1/4
(LOOKING SOUTHWEST)

SIZE	CAGE CODE	INDEX CODE NUMBER				DWG 606601	REV
		AREA	TYPE	CL	DRID		
D	01MF3	533	0670	95	061		-
SCALE: NOTED						SHEET 3	

ATR2080

Path: C:\vss\ficad\Projects\ATR\Reactor Experiments\X-Energy Pebble Irradiation\606601.idw
File:606601R; date: 05/20/2018

NOTES:

1. REMOVE ALL BURRS AND SHARP EDGES.
2. CLEANLINESS PER STD-7022, LEVEL C.
3. WELD PER INL WELD PROCEDURE SPECIFICATION S2.0 OR S5.0 USING ITEM 45 (WELD FILLER METAL). THIS IS AN ASME B&PV CODE, SECTION III, CLASS 1 WELD.
4. WELD PER INL WELD PROCEDURE SPECIFICATION S2.0 OR S5.0 USING ITEM 45 (WELD FILLER METAL). THIS IS AN ASME B&PV CODE, SECTION III, CLASS 3 WELD.
5. VISUALLY INSPECT WELDS PER TPR-13442, WITH ACCEPTANCE CRITERIA PER APPENDIX B.
6. LIQUID PENETRANT INSPECT (PT) WELDS PER INL TECHNICAL PROCEDURE TPR-13437 APPENDIX A OR B, WITH ACCEPTANCE CRITERIA PER APPENDIX I.
7. RADIOGRAPH INSPECT (RT) WELD PER TPR-13430 WITH ACCEPTANCE CRITERIA PER APPENDIX C. IF RADIOGRAPH IS NOT POSSIBLE, THEN CONTACT PROJECT FOR SUBSTITUTION OF ULTRASONIC INSPECTION IN PLACE OF RADIOGRAPH PER PARAGRAPH NB-5279 OF THE ASME BOILER AND PRESSURE VESSEL CODE.
8. ALL THERMOCOUPLE OR TUBING BEND RADII 10X THE O.D. OR GREATER. BEND AS REQUIRED FOR DESIRED PLACEMENT AND FIT.
9. PRESSURE AND LEAK TEST THE COMPLETED ASSEMBLY PER 2007 ASME B&PV CODE SECTION III, ND-6300, USING HIGH PURITY ARGON GAS AT A TEST PRESSURE OF 472 PSIG +15/ -0 PSI AND HOLD FOR A MINIMUM OF 10 MINUTES. EXAMINATION FOR LEAKAGE SHALL BE BY SOAP BUBBLE OF ALL WELD JOINTS AT A PRESSURE OF 429 PSIG +/- 10 PSI PER ND-5380.
10. PERFORM HELIUM LEAK TEST ON COMPLETED -1 ASSEMBLY. PLACE ASSEMBLY WITHIN A HELIUM FILLED BAG (50% MINIMUM HELIUM CONCENTRATION) AND EVACUATE -1 ASSEMBLY. ACCEPTANCE CRITERIA: NO LEAKAGE GREATER THAN 1.0 E-07 CC/SEC.
11. DRY WEIGHT OF ASSEMBLY IS APPROXIMATELY 350 LBS.

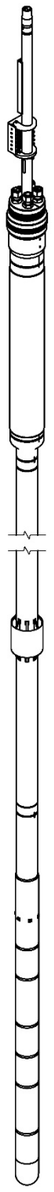

-1 ISOMETRIC
SCALE: NONE
REFERENCE ONLY

3	2	1	SHEET
-	-	-	REV

REV STATUS OF SHEETS

REVISIONS

REV	DESCRIPTION	EFFECTIVE DATE:

					12
	1	606603-1	CAPSULE WELDMENT ASSEMBLY		11
	1		UPPER 5" PIPE		10
	1	606610-1	CAPSULE TRANSITION ASSEMBLY		9
	1	606609-1	LOCATOR TIE INTERFACE PIPE ASSEMBLY		8
	1	606610-2	PIPE TRANSITION ASSEMBLY		7
	1		X-ENERGY 6/7/8 TOP HEAD CLOSURE PLUG ASSEMBLY		6
					5
					4
					3
					2
		-1	TEST TRAIN ASSEMBLY		1
	-1	PART OR IDENTIFYING NO.	NOMENCLATURE OR DESCRIPTION	MATERIAL/SPECIFICATION OR VENDOR NAME	ITEM NO.
QTY REQD					

PARTS LIST

-1	606601
DASH NO.	NEXT ASSY
APPLICATION	

DIMENSIONING AND SYMBOLOGY PER ASME Y14.5M AND STD-10011
UNLESS OTHERWISE SPECIFIED
SURFACE ROUGHNESS $\sqrt{}$
DIMENSIONS AND TOLERANCES ARE IN INCHES
TOLERANCES: X ± .1
DECIMALS: XX ± .03, XXX ± .010
FRACTIONS ± 1/8
ANGULAR ± 2°
DO NOT SCALE DRAWING

REQUESTER: D. STACEY
RESP. ENGR: J. PALMER
DESIGN: J. PALMER
DRAWN: J. TONKS
PROJECT NO.
SPCL CODE
FOR REVIEW/APPROVAL SIGNATURES SEE ECR NO.
EFFECTIVE DATE:

Idaho National Laboratory

ATR
X-ENERGY 6/7/8
TEST TRAIN
ASSEMBLY

SIZE	CAGE CODE	INDEX CODE NUMBER				DWG-	REV
		AREA	TYPE	SEQ	DERIV		
D	01MF3	533	0670	96	081	606602	-

SCALE: NOTED SHEET 1 OF 3

ATR2080

Path: C:\Vault\local\Projects\ATR\Reactor Experiments\X Energy Pebble Irradiation\606602.dgn
File:606602R-
Date:06/19/2018

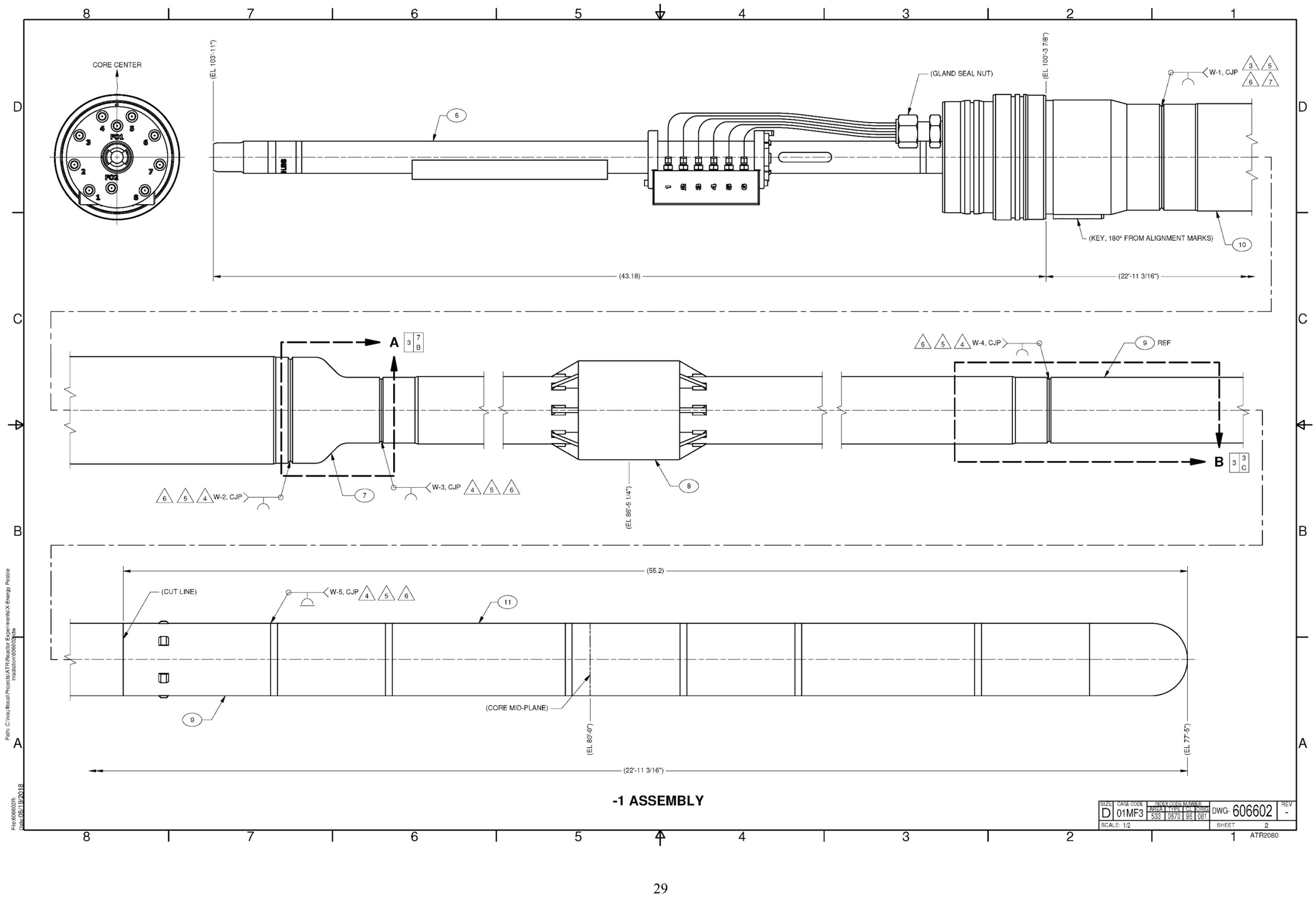
CORE CENTER
(EL 103'-11")
(GLAND SEAL NUT)
(EL 100'-3 7/8")
W-1, CJP
(KEY, 180° FROM ALIGNMENT MARKS)
(43.18)
(22'-11 3/16")
A
B
W-4, CJP
REF
W-2, CJP
W-3, CJP
(EL 86'-5 1/4")
(55.2)
(CUT LINE)
W-5, CJP
(CORE MID-PLANE)
(EL 80'-0")
(EL 77'-5")
(22'-11 3/16")
-1 ASSEMBLY
SIZE D
CAGE CODE 01MF3
INDEX CODE NUMBER
AREA 533 TYPE 0670 CL 96 ORIG 081
DWG- 606602
REV -
SCALE: 1/2
SHEET 2
ATR2080

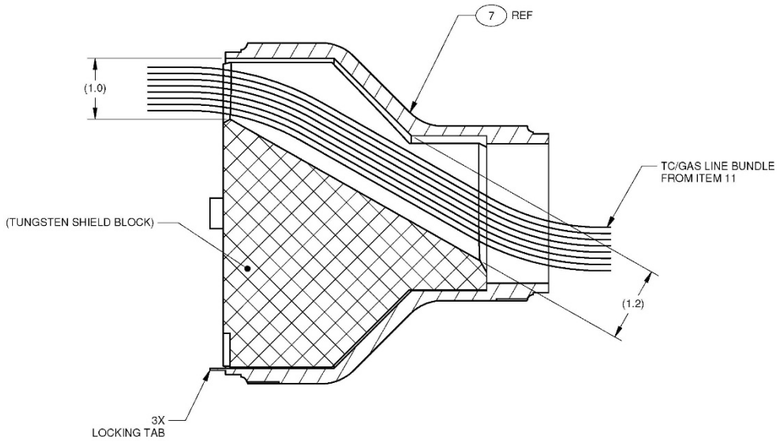

VIEW A
SCALE: 1/1
ITEMS 8 AND 10 REMOVED FOR CLARITY

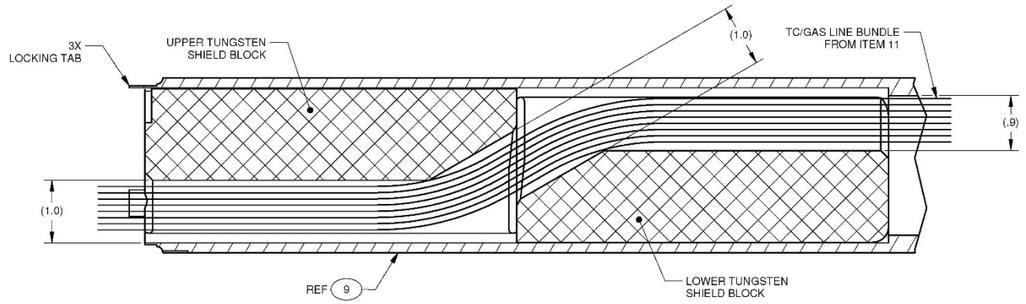

VIEW B
SCALE: 1/1
ITEM 8 REMOVED FOR CLARITY

Path: C:\vault\local\Projects\ATR Reactor Experiments\X-Energy Pebble Irradiation\606602.dwg
File:606602R
Date: 06/19/2018

SIZE	CAGE CODE	INDEX CODE NUMBER				DWG	REV
		AREA	TYPE	OA	CHRG		
D	01MF3	533	0670	95	081	606602	-
SCALE: NOTED						SHEET 3	

ATR2080

INL.idw Rev 13

NOTES:

1. REMOVE ALL BURRS AND SHARP EDGES.
2. FOR METAL COMPONENTS, CLEANLINESS PER STD-7022, LEVEL C. FOR GRAPHITE COMPONENTS CLEANLINESS, SEE NOTES 3 & 4.
3. CARE SHOULD BE TAKEN TO AVOID CONTAMINATING GRAPHITE COMPONENTS DURING FABRICATION AND ASSEMBLY. WASH ALL TOOLS WITH ALCOHOL PRIOR TO USE, AND HANDLE GRAPHITE WITH CLEAN, WHITE, LINT FREE, COTTON GLOVES. DO NOT FABRICATE USING ANY CUTTING LUBRICANTS.
4. PRIOR TO ASSEMBLY, CLEAN GRAPHITE COMPONENT AS FOLLOWS:
   WEARING CLOTH OR NITRILE GLOVES, REMOVE ALL DUST AND DEBRIS USING AN AEROSOL PRESSURIZED DUST-OFF PRODUCT. THEN, ULTRASONICALLY CLEAN IN DE-IONIZED WATER FOR 20 MINUTES. RINSE WITH ALCOHOL AND ALLOW TO AIR DRY. DRY COMPONENTS IN A LABORATORY OVEN AT 130°C IN AIR FOR 2 HOURS. ALL HANDLING AFTER CLEANING SHALL BE DONE USING CLEAN, DRY, LINT FREE, WHITE COTTON GLOVES.
5. PRESERVE AND PROTECT PER STD-7020, CLASS 1.
6. MARK PER STD-13122-3D1 WITH "CAP-5". USING 3/16 HIGH CHARACTERS, IN LOCATION APPROXIMATELY AS SHOWN.
7. BRAZE ALL THERMOCOUPLES AND GAS LINES RUNNING THRU ITEM 6 (CAPSULE TOP HEAD) PER INL S12.10 AND S12.11, USING ITEM 25 (BRAZE FILLER METAL). VISUALLY INSPECT ACCESSIBLE PORTIONS OF THE BRAZES WITH ACCEPTANCE CRITERIA PER THE FOLLOWING:
   1. ENSURE A COMPLETE 360° FILLET AROUND EACH TC AND GAS LINE ON EITHER THE TOP OR BOTTOM OF ITEM 6.
8. TEMPORARILY MARK THERMOCOUPLES PER STD-13122-18 OR 19 WITH:
   TC-X-Y. WHERE "X" IS THE CAPSULE (ASSEMBLY) NUMBER AND "Y" DENOTES THE POSITION IN THE CAPSULE AS SHOWN. NOTE THAT LABELS MUST BE DESIGNED SUCH THAT THEY CAN PASS THROUGH THE THRU TUBES DURING CAPSULE TRAIN ASSEMBLY.
9. TEMPORARILY MARK GAS LINES PER STD-13122-18 OR 19 WITH:
   GL-X-IN OR OUT. WHERE "X" IS THE CAPSULE (ASSEMBLY) NUMBER AND "IN" OR "OUT" DENOTES WHETHER THE LINE IS SUPPLY OR EXHAUST.
10. INSTALL ITEM 21 (FUEL PELLET) PER CAPSULE ASSEMBLY LOADING INSTRUCTIONS.
11. GRAPHITE PER CGI-770.
12. PRIOR TO ASSEMBLY, COAT INSIDE WALL (Ø3.484 [Ø8.885]) OF ITEM 7 (CAPSULE BODY) WITH TWO COATS OF ITEM 24 (NEOLUBE).
13. ASME B&PV CODE SECTION III, CLASS 3 MATERIAL.
14. QUALITY LEVEL DETERMINATION PER ATR COMP-000007, UNLESS OTHERWISE SPECIFIED.
15. QUALITY LEVEL DETERMINATION PER RTC-000485.
16. APPLY A THIN COAT OF ITEM 33 (NEOLUBE) TO THE BOTTOM 1/2" OF ITEM 14 (THRU TUBES) PRIOR TO ASSEMBLY. FLARE THE BOTTOM OF ITEM 14 (THRU TUBES) AT -1 ASSEMBLY.
17. AFTER CUTTING TO LENGTH, TOTAL DIAMETRAL VARIATION (OD), PART TO PART, OF ITEM 14 (THRU TUBES), MUST BE LESS THAN .001 INCH. DIAMETRAL CLEARANCE BETWEEN ITEM 14 AND THE HOLES IN THE ITEM 6 (CAPSULE BODY), SHALL BE LESS THAN .001. HOLES IN ITEM 6 MAY BE ADJUSTED FROM SPECIFIED DIMENSION TO ACHIEVE THIS CLEARANCE.
18. ALTERNATE UNITS SHOWN IN BRACKETS [ ] ARE IN CENTIMETERS AND FOR REFERENCE ONLY.

7	6	5	4	3	2	1	SHEET	REV STATUS OF SHEETS
-	-	-	-	-	-	-	REV	

REVISIONS

REV	DESCRIPTION	EFFECTIVE DATE:

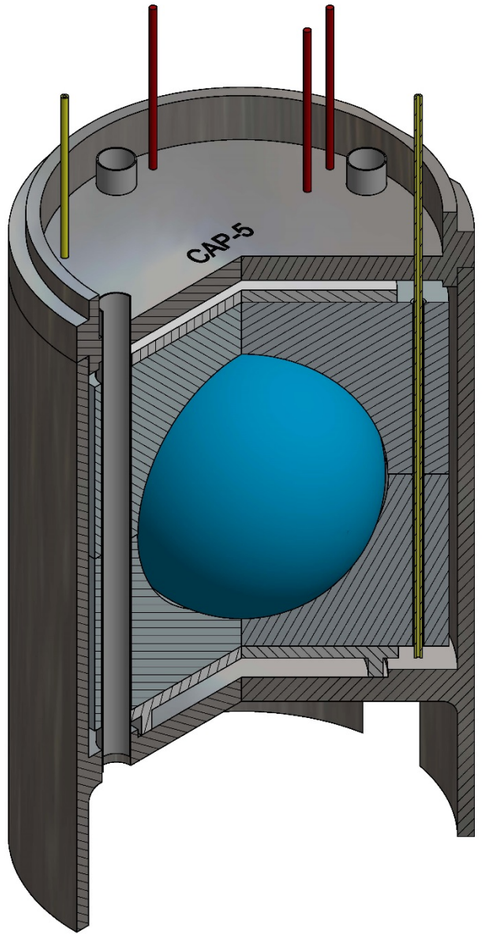

-1 ASSEMBLY
SCALE: 2/1

QTY REQD		PART OR IDENTIFYING NO.	NOMENCLATURE OR DESCRIPTION	MATERIAL/SPECIFICATION OR VENDOR NAME	ITEM NO.
AR			BRAZE FILLER METAL, BNi-12, AWS 5.8	WALL COLMONOY CORP	25
	AR		NEOLUBE No. 1 OR No. 2	HURON INDUSTRIES	24
					23
					22
	1		FUEL PEBBLE (10)	AS DIRECTED BY PROJECT	21
6		062-N-I600-UNG-240" TO 264" IMM-36 PVC 24	THERMOCOUPLE, TYPE STD-N .062 OD X 20-22' LG, MgO INSULATION, I 600 SHEATH, ASTM E235	IDAHO LABS CORP	20
AR				TUBING, .062 OD ±.002 X .016 ± .002 WALL X 10 FT LG MIN, 304/304L SST, SEAMLESS ASTM A213	19
					18
					17
	AR	-16	TC SLEEVE	TUBING, .085 OD X .010 WALL MOLYBDENUM 99.95% PURE	16
	AR	-15	GAS SLEEVE	TUBING, .085 OD X .010 WALL MOLYBDENUM 99.95% PURE	15
4		-14	THRU TUBE	TUBING, .82cm OD X .06cm WALL, SEAMLESS 304/304L SST ASTM A213	14
	1	-13	UPPER INSULATING DISK	AmZirOx 86 ZIRCONIA ASTRO MET INC.	13
	1	-12	LOWER INSULATING DISK	AmZirOx 86 ZIRCONIA ASTRO MET INC.	12
					11
					10
	1	-9	GRAPHITE HOLDER, LOWER	GRAPHITE, IG 430 TOYO TANSO (11)	9
	1	-8	GRAPHITE HOLDER, UPPER	GRAPHITE, IG 430 TOYO TANSO (11)	8
(15)	1	-7	CAPSULE BODY	BAR, 316/316L SST (13) ASME SA479	7
(15)	1	-6	CAPSULE TOP HEAD	BAR, 316/316L SST (13) ASME SA479	6
					5
					4
					3
	1	-2	CAPSULE 5 HEAD ASSEMBLY		2
(15)		-1	CAPSULE 5 ASSEMBLY		1

PARTS LIST

DASH NO.	
-1	606603
APPLICATION	NEXT ASSY

DIMENSIONING AND SYMBOLOGY PER ASME Y14.5M AND STD-1011
UNLESS OTHERWISE SPECIFIED
SURFACE ROUGHNESS $\sqrt{}$
DIMENSIONS AND TOLERANCES ARE IN INCHES
CLEARANCES: X = ± .1
DECIMALS: XX = ± .03, XXX = ± .010
FRACTIONS = 1/8
ANGULAR = 2°
DO NOT SCALE DRAWING

REQUESTER: D. STACEY
RESP ENGR: J. PALMER
DESIGN: J. PALMER
DRAWN: J. TONKS
PROJECT NO.
SPCL CODE
FOR REVIEW/APPROVAL SIGNATURES SEE ECR NO.
EFFECTIVE DATE:

Idaho National Laboratory

ATR
X-ENERGY 6/7/8
PEBBLE IRRADIATION EXPERIMENT
CAPSULE 5
ASSEMBLIES AND DETAILS

SIZE	CAGE CODE	INDEX CODE NUMBER				DWG-	REV
		AREA	TYPE	CL	ORIG		
D	01MF3	533	0670	95	081	606604	-

SCALE: NOTED SHEET 1 OF 7

ATR2080

NOT RELEASED
INFORMATION ONLY
NOT APPROVED FOR FABRICATION OR CONSTRUCTION

File:606604.ipt Path: C:\ncal\Acad Projects\ATR\Reactor Experiments\X-Energy Pebble Irradiation\606604.dwg Date: 05/14/2018

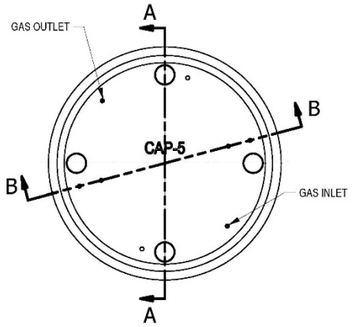

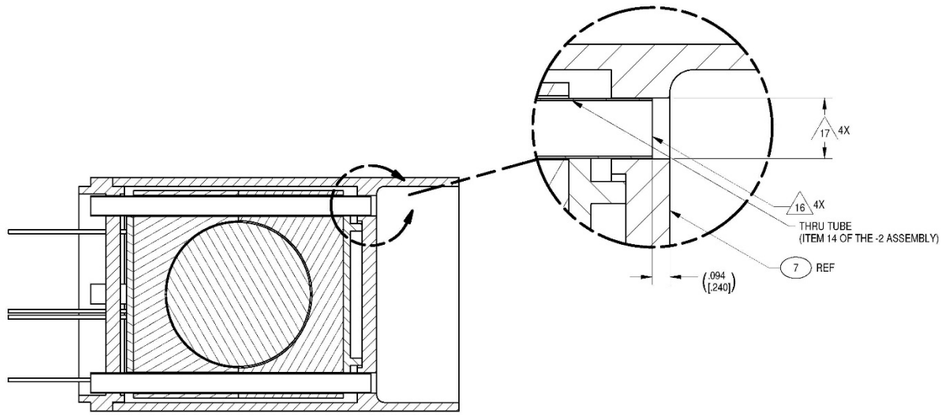

SECTION **A-A**
SCALE: 1/1

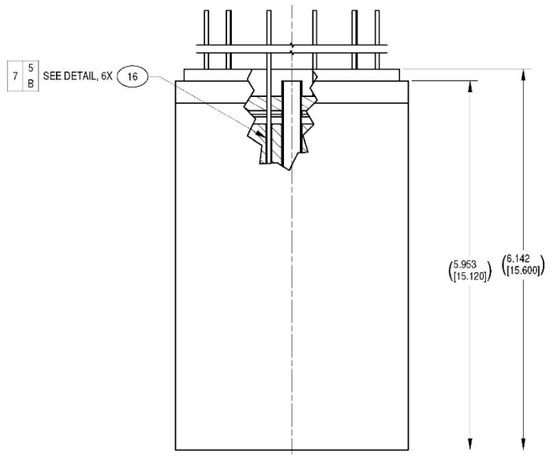

-1 ASSEMBLY
SCALE: 1/1

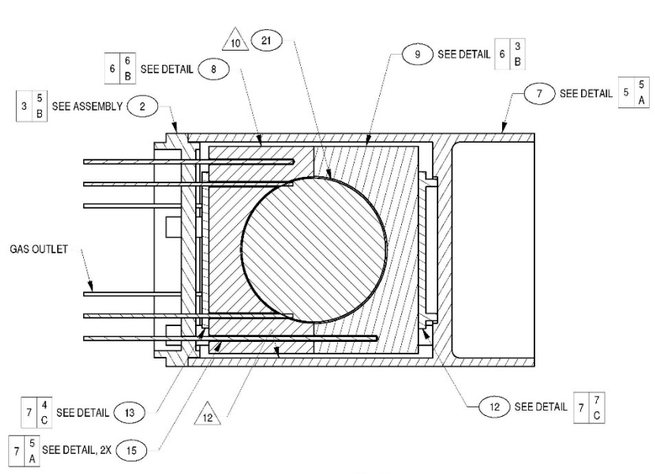

SECTION **B-B**
SCALE: 1/1
(ROTATED 60° CCW)

NOT RELEASED
INFORMATION ONLY
NOT APPROVED FOR
FABRICATION OR CONSTRUCTION.

SIZE	CAGE CODE	INDEX CODE NUMBER				DWG: 606604	REV
		AREA	TYPE	CL	ORIG		
D	01MF3	533	0670	96	081		-
SCALE: NOTED					SHEET 2		ATR2080

File:606604R; Path: C:\vault\local\Projects\ATR\Reactor Experiments\X Energy Pebble Irradiation\606604.idw
Date: 05-14-2018

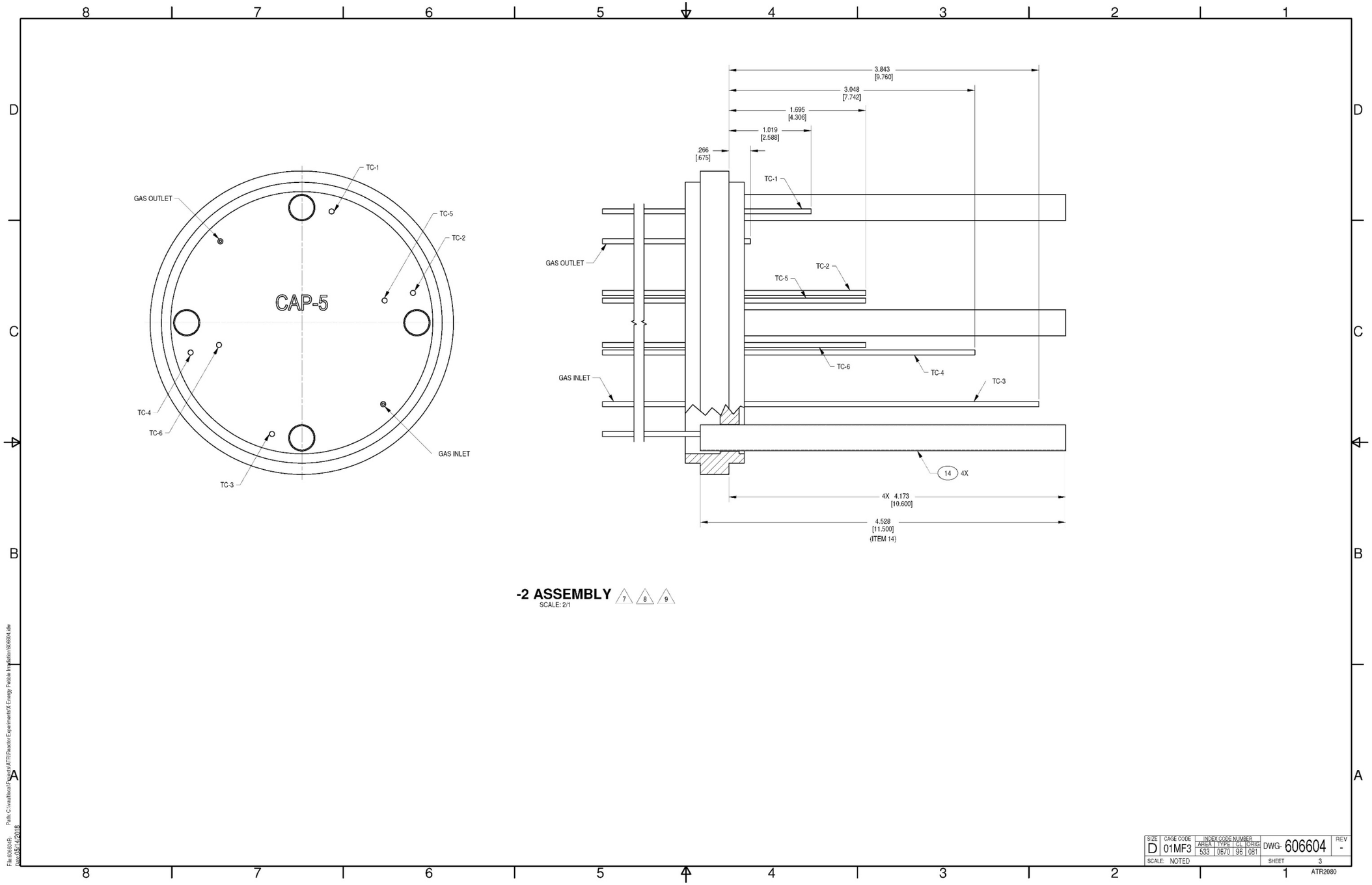

GAS OUTLET
TC-1
TC-5
TC-2
CAP-5
TC-4
TC-6
TC-3
GAS INLET
3.843
[9.760]
3.048
[7.742]
1.695
[4.306]
1.019
[2.588]
.266
[.675]
TC-1
GAS OUTLET
TC-2
TC-5
TC-6
TC-4
GAS INLET
TC-3
14 4X
4X 4.173
[10.600]
4.528
[11.500]
(ITEM 14)
-2 ASSEMBLY 7 8 9
SCALE: 2/1
SIZE D
CAGE CODE 01MF3
INDEX CODE NUMBER
AREA 533 TYPE 0670 CL 96 ORIG 081
DWG- 606604
REV -
SCALE: NOTED
SHEET 3
ATR2080

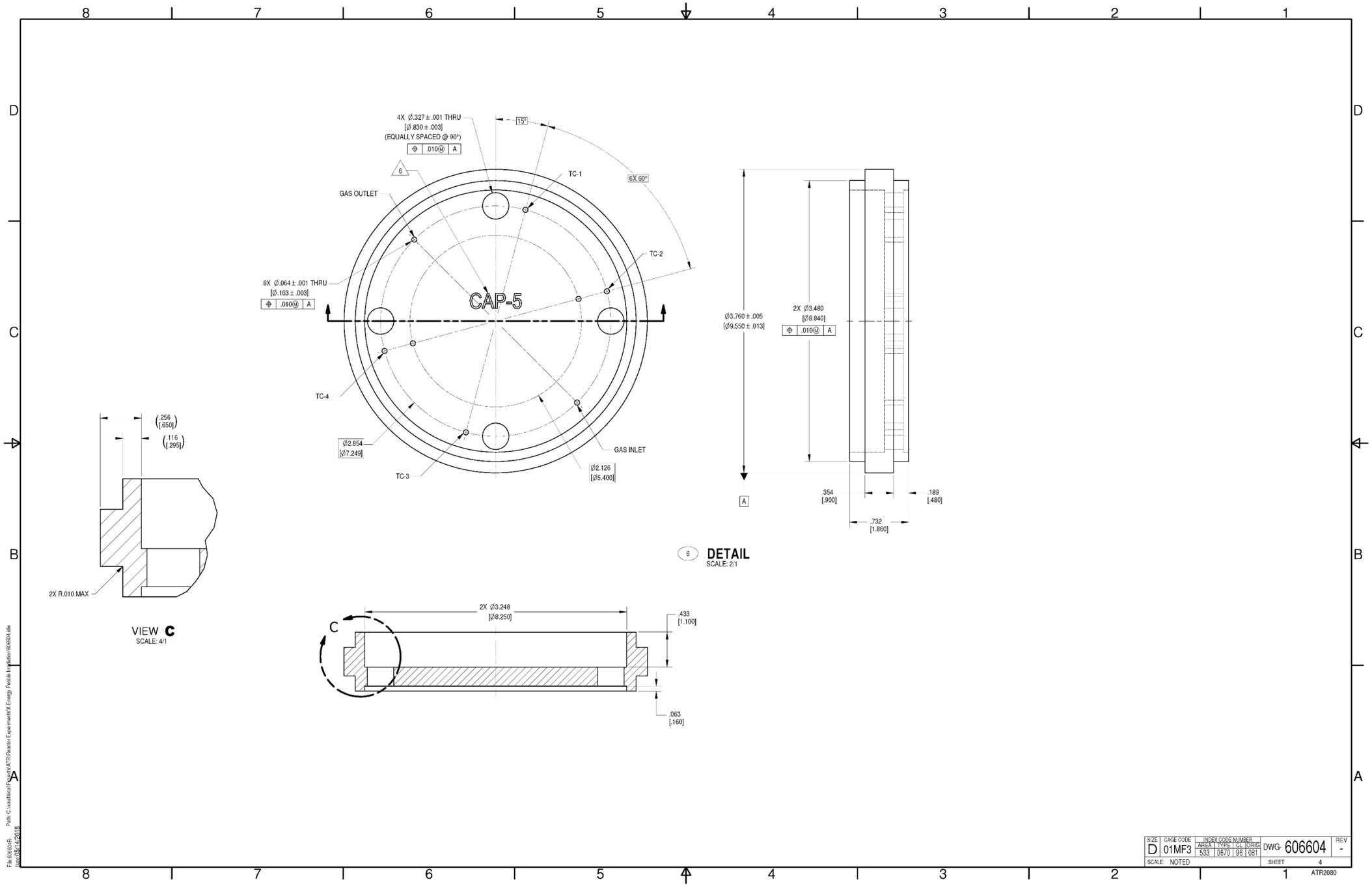

4X Ø.327 ± .001 THRU
[Ø.830 ± .003]
(EQUALLY SPACED @ 90°)
.010Ⓜ A
15°
6X 60°
6
TC-1
GAS OUTLET
TC-2
8X Ø.064 ± .001 THRU
[Ø.163 ± .003]
.010Ⓜ A
CAP-5
TC-4
Ø2.854
[Ø7.249]
TC-3
GAS INLET
Ø2.126
[Ø5.400]
Ø3.760 ± .005
[Ø9.550 ± .013]
2X Ø3.480
[Ø8.840]
.010Ⓜ A
A
.354
[.900]
.189
[.480]
.732
[1.860]
6 DETAIL
SCALE: 2/1
(.256 [.650])
(.116 [.295])
2X R.010 MAX
VIEW C
SCALE: 4/1
C
2X Ø3.248
[Ø8.250]
.433
[1.100]
.063
[.160]
SIZE D
CAGE CODE 01MF3
INDEX CODE NUMBER
AREA 533 TYPE 0670 CL 96 ORIG 081
DWG- 606604
REV -
SCALE: NOTED
SHEET 4
ATR2080

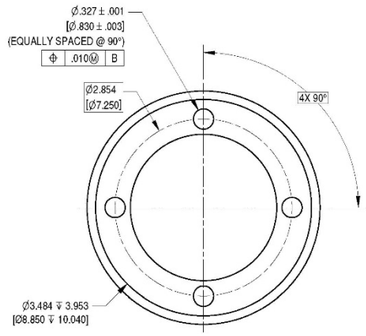

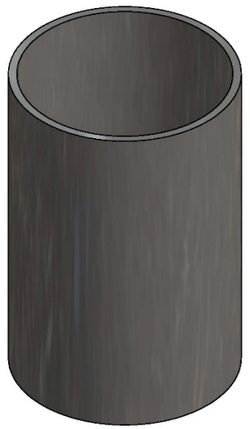

-7 ISOMETRIC
REFERENCE ONLY
SCALE: NONE

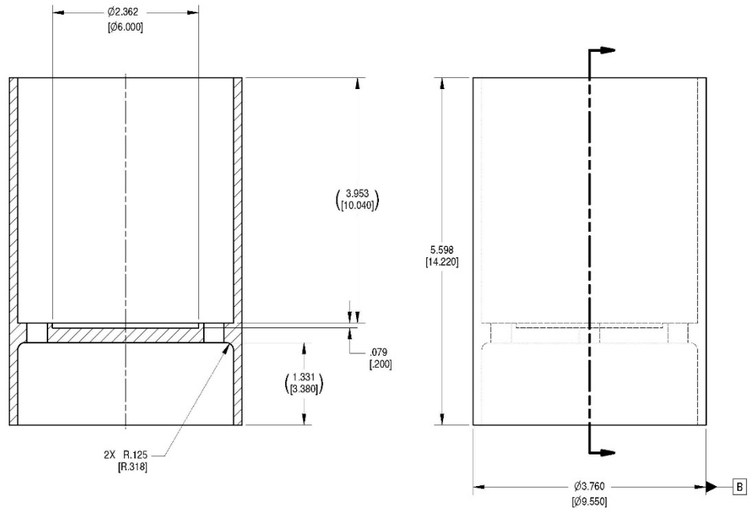

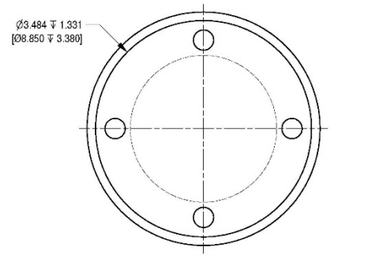

7 **DETAIL**
SCALE: 1/1

SIZE	CAGE CODE	INDEX CODE NUMBER				DWG- 606604	REV
		AREA	TYPE	SI	TOPIC		
D	01MF3	533	0570	95	081		-
SCALE: NOTED					SHEET 5		

ATR2080

File:606604R; Path: C:\vault\local\Projects\ATR\Reactor Experiments\X-Energy Pebble Irradiation\606604.idw
Date: 05/14/2018

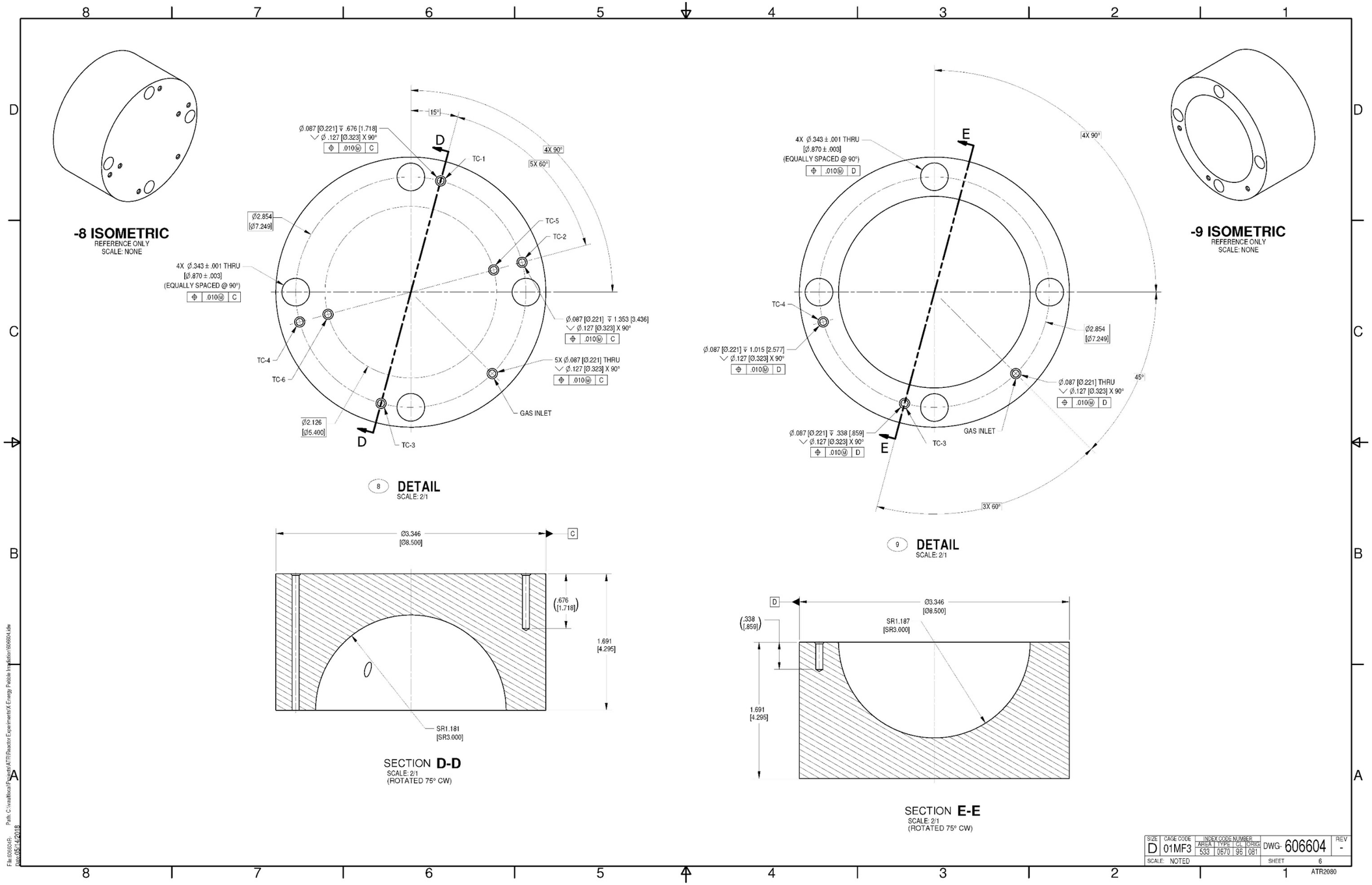

-8 ISOMETRIC
REFERENCE ONLY
SCALE: NONE
-9 ISOMETRIC
REFERENCE ONLY
SCALE: NONE
Ø.087 [Ø.221] ↧ .676 [1.718]
Ø .127 [Ø.323] X 90°
.010Ⓜ C
15°
4X 90°
5X 60°
TC-1
TC-2
TC-3
TC-4
TC-5
TC-6
Ø2.854
[Ø7.249]
4X Ø.343 ± .001 THRU
[Ø.870 ± .003]
(EQUALLY SPACED @ 90°)
Ø.087 [Ø.221] ↧ 1.353 [3.436]
Ø.127 [Ø.323] X 90°
5X Ø.087 [Ø.221] THRU
Ø.127 [Ø.323] X 90°
GAS INLET
Ø2.126
[Ø5.400]
8 DETAIL
SCALE: 2/1
Ø3.346
[Ø8.500]
(.676
[1.718])
1.691
[4.295]
SR1.181
[SR3.000]
SECTION D-D
SCALE: 2/1
(ROTATED 75° CW)
4X Ø.343 ± .001 THRU
[Ø.870 ± .003]
(EQUALLY SPACED @ 90°)
Ø.087 [Ø.221] ↧ 1.015 [2.577]
Ø.127 [Ø.323] X 90°
Ø.087 [Ø.221] THRU
Ø.127 [Ø.323] X 90°
Ø.087 [Ø.221] ↧ .338 [.859]
Ø.127 [Ø.323] X 90°
45°
3X 60°
9 DETAIL
SCALE: 2/1
(.338
[.859])
SR1.187
[SR3.000]
SECTION E-E
SCALE: 2/1
(ROTATED 75° CW)
SIZE D
CAGE CODE 01MF3
INDEX CODE NUMBER
AREA 533 TYPE 0670 CL 96 ORIG 081
DWG- 606604
REV -
SCALE: NOTED
SHEET 6
ATR2080

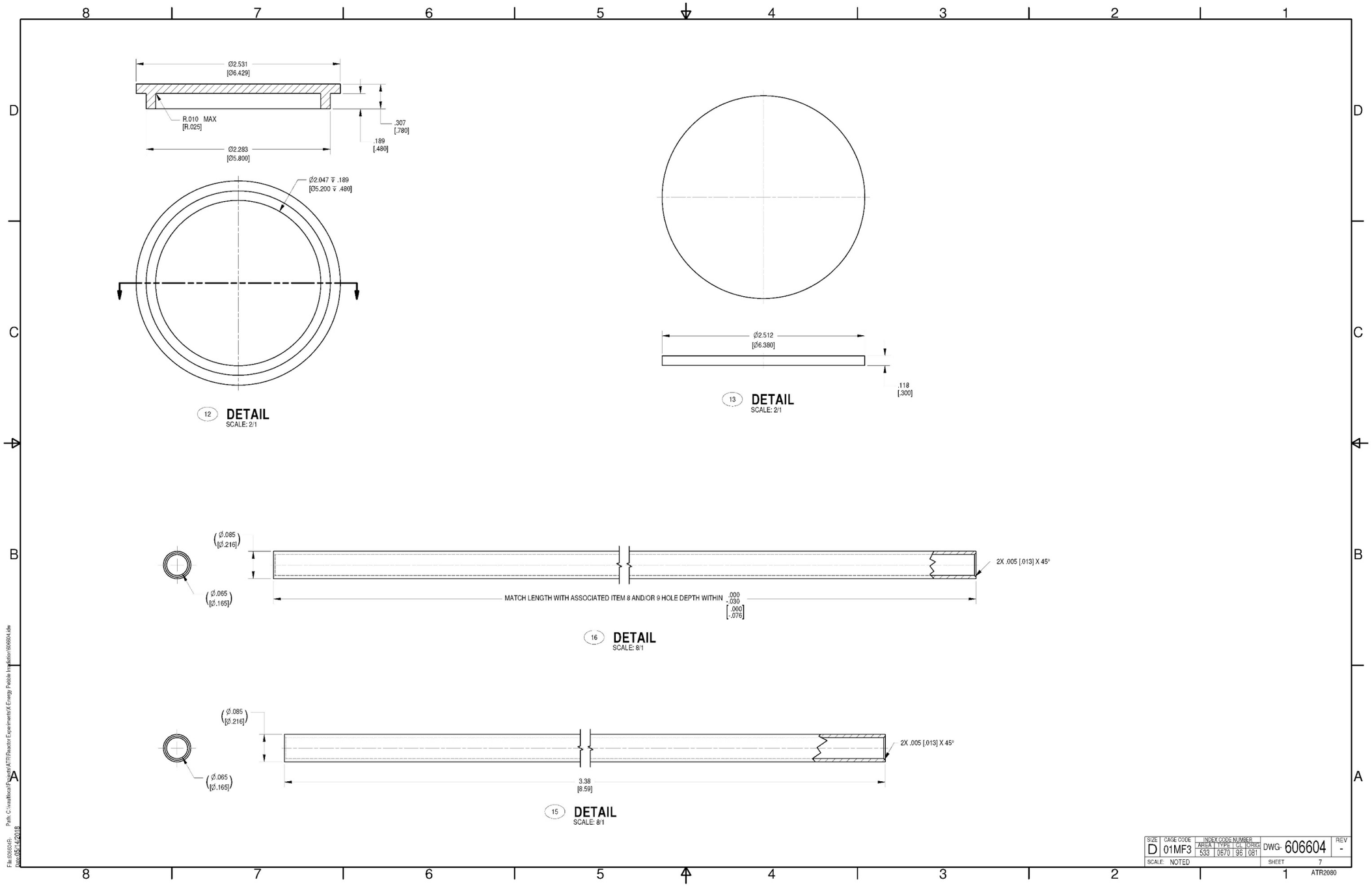

Ø2.531
[Ø6.429]
R.010 MAX
[R.025]
.307
[.780]
.189
[.480]
Ø2.283
[Ø5.800]
Ø2.047 ↧ .189
[Ø5.200 ↧ .480]
12 DETAIL
SCALE: 2/1
Ø2.512
[Ø6.380]
.118
[.300]
13 DETAIL
SCALE: 2/1
(Ø.085
[Ø.216])
(Ø.065
[Ø.165])
2X .005 [.013] X 45°
MATCH LENGTH WITH ASSOCIATED ITEM 8 AND/OR 9 HOLE DEPTH WITHIN .000 -.030 [.000 -.076]
16 DETAIL
SCALE: 8/1
(Ø.085
[Ø.216])
(Ø.065
[Ø.165])
2X .005 [.013] X 45°
3.38
[8.59]
15 DETAIL
SCALE: 8/1
SIZE D
CAGE CODE 01MF3
INDEX CODE NUMBER
AREA 533 TYPE 0670 CL 96 ORIG 081
DWG- 606604
REV -
SCALE: NOTED
SHEET 7
ATR2080

INL.idw Rev 13

NOTES:

1. REMOVE ALL BURRS AND SHARP EDGES.
2. FOR METAL COMPONENTS, CLEANLINESS PER STD-7022, LEVEL C. FOR GRAPHITE COMPONENTS CLEANLINESS, SEE NOTES 3 & 4.
3. CARE SHOULD BE TAKEN TO AVOID CONTAMINATING GRAPHITE COMPONENTS DURING FABRICATION AND ASSEMBLY. WASH ALL TOOLS WITH ALCOHOL PRIOR TO USE, AND HANDLE GRAPHITE WITH CLEAN, WHITE, LINT FREE, COTTON GLOVES. DO NOT FABRICATE USING ANY CUTTING LUBRICANTS.
4. PRIOR TO ASSEMBLY, CLEAN GRAPHITE COMPONENT AS FOLLOWS:
   WEARING CLOTH OR NITRILE GLOVES, REMOVE ALL DUST AND DEBRIS USING AN AEROSOL PRESSURIZED DUST-OFF PRODUCT. THEN, ULTRASONICALLY CLEAN IN DE-IONIZED WATER FOR 20 MINUTES. RINSE WITH ALCOHOL AND ALLOW TO AIR DRY. DRY COMPONENTS IN A LABORATORY OVEN AT 130°C IN AIR FOR 2 HOURS. ALL HANDLING AFTER CLEANING SHALL BE DONE USING CLEAN, DRY, LINT FREE, WHITE COTTON GLOVES.
5. PRESERVE AND PROTECT PER STD-7020, CLASS 1.
6. MARK PER STD-13122-3D1 WITH "CAP-1". USING 3/16 HIGH CHARACTERS, IN LOCATION APPROXIMATELY AS SHOWN.
7. BRAZE ALL THERMOCOUPLES AND GAS LINES RUNNING THRU ITEM 6 (CAPSULE TOP HEAD) PER INL S12.10 AND S12.11, USING ITEM 25 (BRAZE FILLER METAL). VISUALLY INSPECT ACCESSIBLE PORTIONS OF THE BRAZES WITH ACCEPTANCE CRITERIA PER THE FOLLOWING:
   1. ENSURE A COMPLETE 360° FILLET AROUND EACH TC AND GAS LINE ON EITHER THE TOP OR BOTTOM OF ITEM 6.
8. TEMPORARILY MARK THERMOCOUPLES PER STD-13122-18 OR 19 WITH:
   TC-X-Y. WHERE "X" IS THE CAPSULE (ASSEMBLY) NUMBER AND "Y" DENOTES THE POSITION IN THE CAPSULE AS SHOWN. NOTE THAT LABELS MUST BE DESIGNED SUCH THAT THEY CAN PASS THROUGH THE THRU TUBES DURING CAPSULE TRAIN ASSEMBLY.
9. TEMPORARILY MARK GAS LINES PER STD-13122-18 OR 19 WITH:
   GL-X-IN OR OUT. WHERE "X" IS THE CAPSULE (ASSEMBLY) NUMBER AND "IN" OR "OUT" DENOTES WHETHER THE LINE IS SUPPLY OR EXHAUST.
10. INSTALL ITEM 21 (FUEL PEBBLE) PER CAPSULE ASSEMBLY LOADING INSTRUCTIONS.
11. GRAPHITE PER CGI-770.
12. PRIOR TO ASSEMBLY, COAT INSIDE WALL (Ø3.484 [Ø8.885]) OF ITEM 7 (CAPSULE BODY) WITH TWO COATS OF ITEM 24 (NEOLUBE).
13. ASME B&PV CODE SECTION III, CLASS 3 MATERIAL.
14. QUALITY LEVEL DETERMINATION PER ATR COMP-000007, UNLESS OTHERWISE SPECIFIED.
15. QUALITY LEVEL DETERMINATION PER RTC-000485.
16. ALTERNATE UNITS SHOWN IN BRACKETS [ ] ARE IN CENTIMETERS AND FOR REFERENCE ONLY.

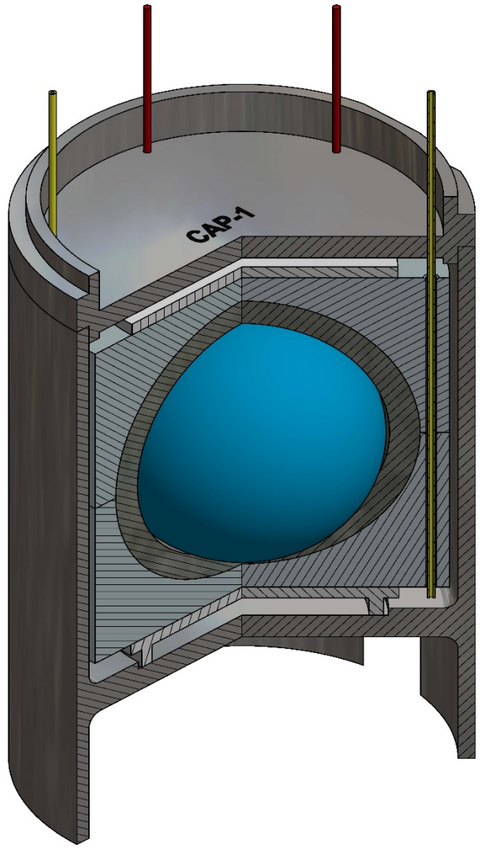

-1 ASSEMBLY
SCALE: 2/1

7	6	5	4	3	2	1	SHEET
-	-	-	-	-	-	-	REV

REV STATUS OF SHEETS

REVISIONS		
REV	DESCRIPTION	EFFECTIVE DATE:

QTY REQD -2	QTY REQD -1	PART OR IDENTIFYING NO.	NOMENCLATURE OR DESCRIPTION	MATERIAL/SPECIFICATION OR VENDOR NAME	ITEM NO.
	AR		BRAZE FILLER METAL, BNI-12, AWS 5.8	WALL COLMONOY CORP	25
	AR		NEOLUBE No. 1 OR No. 2	HURON INDUSTRIES	24
					23
					22
	1		FUEL PEBBLE (10)	AS DIRECTED BY PROJECT	21
4		082-N-1800-UNG-240" TO 264" IMM-36 PVC 24	THERMOCOUPLE, TYPE STD-N .062 OD X 20-22' LG, MgO INSULATION, I 600 SHEATH, ASTM E235	IDAHO LABS CORP	20
AR				TUBING, .082 OD ± .002 X .016 ± .002 WALL X 10 FT LG MIN, 304/304L SST, SEAMLESS ASTM A213	19
					18
					17
	AR	-16	TC SLEEVE	TUBING, .065 OD X .010 WALL MOLYBDENUM 99.95% PURE	16
	AR	-15	GAS SLEEVE	TUBING, .085 OD X .010 WALL MOLYBDENUM 99.95% PURE	15
					14
	1	-13	UPPER INSULATING DISK	AmZirOX 86 ZIRCONIA ASTRO MET INC.	13
	1	-12	LOWER INSULATING DISK	AmZirOx 86 ZIRCONIA ASTRO MET INC.	12
					11
					10
	1	-9	GRAPHITE HOLDER, LOWER	GRAPHITE, IG 430 (11) TOYO TANSO	9
	1	-8	GRAPHITE HOLDER, UPPER	GRAPHITE, IG 430 (11) TOYO TANSO	8
(15)	1	-7	CAPSULE BODY	BAR, 316/316L SST (13) ASME SA479	7
(15)	1	-6	CAPSULE TOP HEAD	BAR, 316/316L SST (13) ASME SA479	6
					5
					4
					3
	1	-2	CAPSULE 1 HEAD ASSEMBLY		2
(15)		-1	CAPSULE 1 ASSEMBLY		1

PARTS LIST

-1	606603
DASH NO.	NEXT ASSY
APPLICATION	

NOT RELEASED
INFORMATION ONLY
NOT APPROVED FOR FABRICATION OR CONSTRUCTION

DIMENSIONING AND SYMBOLOGY PER ASME Y14.5M AND STD-10001
UNLESS OTHERWISE SPECIFIED
SURFACE ROUGHNESS 125
DIMENSIONS AND TOLERANCES ARE IN INCHES
TOLERANCES: DECIMALS .X ± .1 / .XX ± .03 / .XXX ± .010; FRACTIONS ± 1/8; ANGULAR ± 2°
DO NOT SCALE DRAWING

REQUESTER: D. STACEY
RESP ENGR: J. PALMER
DESIGN: J. PALMER
DRAWN: J. TONKS
PROJECT NO.
SPCL CODE
FOR REVIEW/APPROVAL SIGNATURES SEE ECR NO.
EFFECTIVE DATE:

Idaho National Laboratory

ATR
X-ENERGY 6/7/8
PEBBLE IRRADIATION EXPERIMENT
CAPSULE 1
ASSEMBLIES AND DETAILS

SIZE	CAGE CODE	INDEX CODE NUMBER AREA	TYPE	CIL	ORIG	DWG-	REV
D	01MF3	533	0670	96	081	606608	-

SCALE: NOTED SHEET 1 OF 7

ATR2080

File:622626P.
Date:03/28/2018
Path: C:\workfiles\Projects\ATR\Reactor Experiments\X-Energy Pebble Irradiation\606608.dft

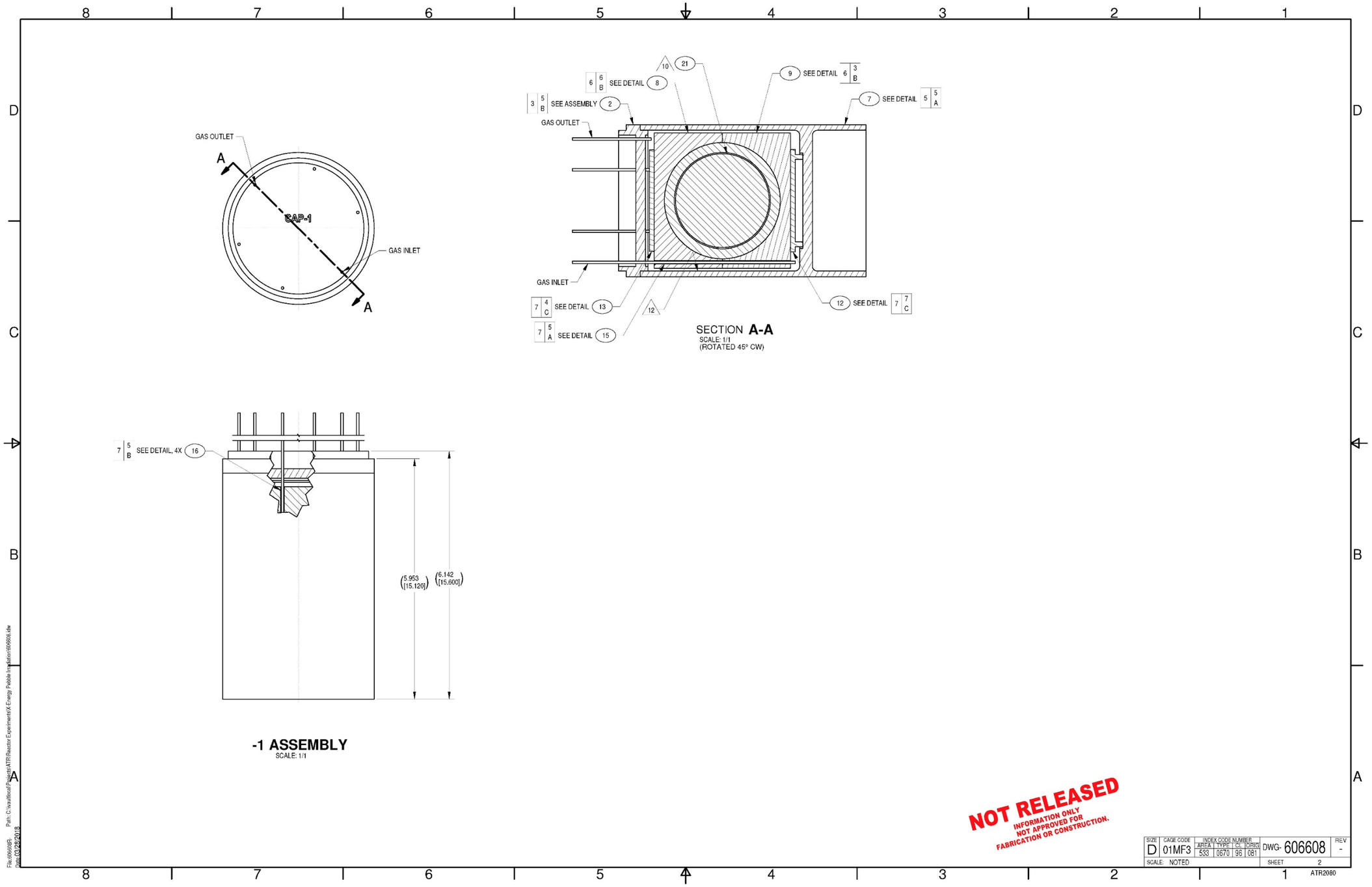
GAS OUTLET
A
CAP-1
GAS INLET
A
10 21
6 6 B SEE DETAIL 8
9 SEE DETAIL 6 3 B
3 5 B SEE ASSEMBLY 2
7 SEE DETAIL 5 5 A
GAS OUTLET
GAS INLET
7 4 C SEE DETAIL 13
12
12 SEE DETAIL 7 7 C
7 5 A SEE DETAIL 15
SECTION A-A
SCALE: 1/1
(ROTATED 45° CW)
7 5 B SEE DETAIL, 4X 16
(5.953 [15.120])
(6.142 [15.600])
-1 ASSEMBLY
SCALE: 1/1
NOT RELEASED
INFORMATION ONLY
NOT APPROVED FOR
FABRICATION OR CONSTRUCTION.
SIZE D
CAGE CODE 01MF3
INDEX CODE NUMBER
AREA 533 TYPE 0670 CL 96 ORIG 081
DWG- 606608
REV -
SCALE: NOTED
SHEET 2
ATR2080

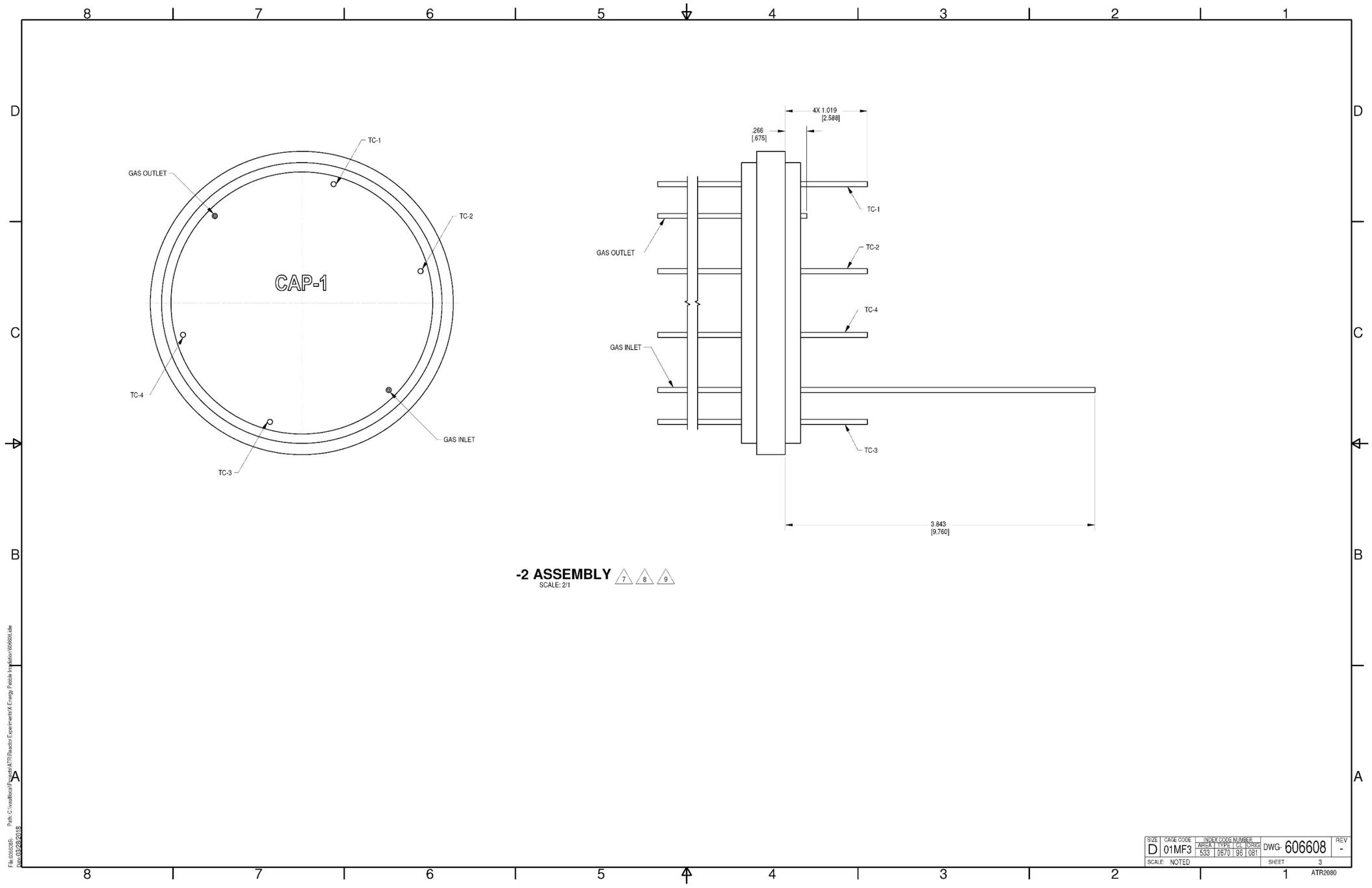

TC-1
GAS OUTLET
TC-2
CAP-1
TC-4
GAS INLET
TC-3
4X 1.019
[2.588]
.266
[.675]
TC-1
GAS OUTLET
TC-2
TC-4
GAS INLET
TC-3
3.843
[9.760]
-2 ASSEMBLY
SCALE: 2/1
SIZE D
CAGE CODE 01MF3
INDEX CODE NUMBER
AREA 533 TYPE 0670 CL 96 ORIG 081
DWG- 606608
REV -
SCALE: NOTED
SHEET 3
ATR2080

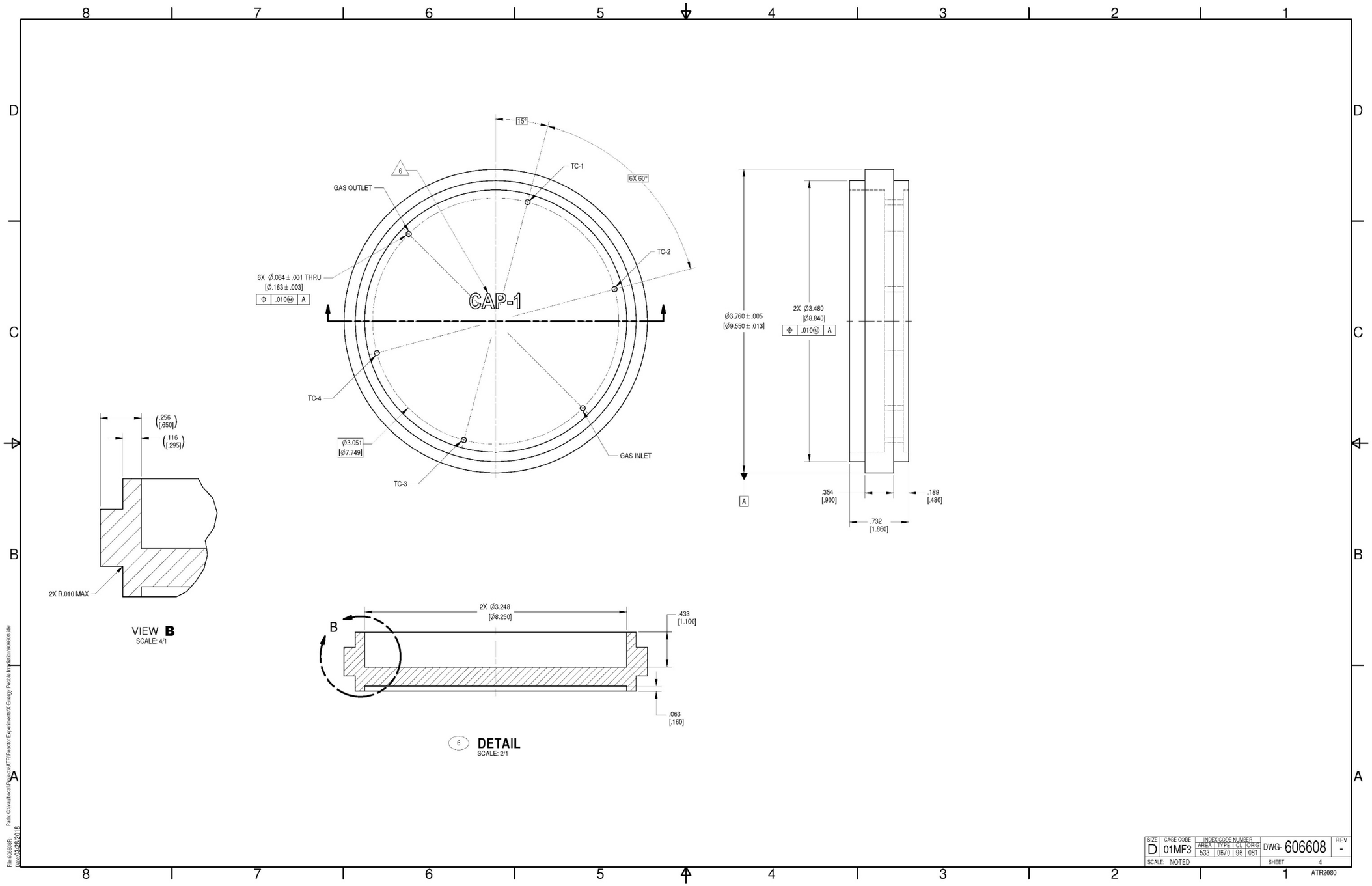

15°
6X 60°
6
GAS OUTLET
TC-1
TC-2
6X Ø.064 ± .001 THRU
[Ø.163 ± .003]
.010Ⓜ A
CAP-1
TC-4
Ø3.051
[Ø7.749]
TC-3
GAS INLET
Ø3.760 ± .005
[Ø9.550 ± .013]
2X Ø3.480
[Ø8.840]
.010Ⓜ A
A
.354
[.900]
.189
[.480]
.732
[1.860]
(.256 [.650])
(.116 [.295])
2X R.010 MAX
VIEW B
SCALE: 4/1
B
2X Ø3.248
[Ø8.250]
.433
[1.100]
.063
[.160]
6 DETAIL
SCALE: 2/1
SIZE D
CAGE CODE 01MF3
INDEX CODE NUMBER
AREA 533 TYPE 0670 CL 96 ORIG 081
DWG- 606608
REV -
SCALE: NOTED
SHEET 4
ATR2080

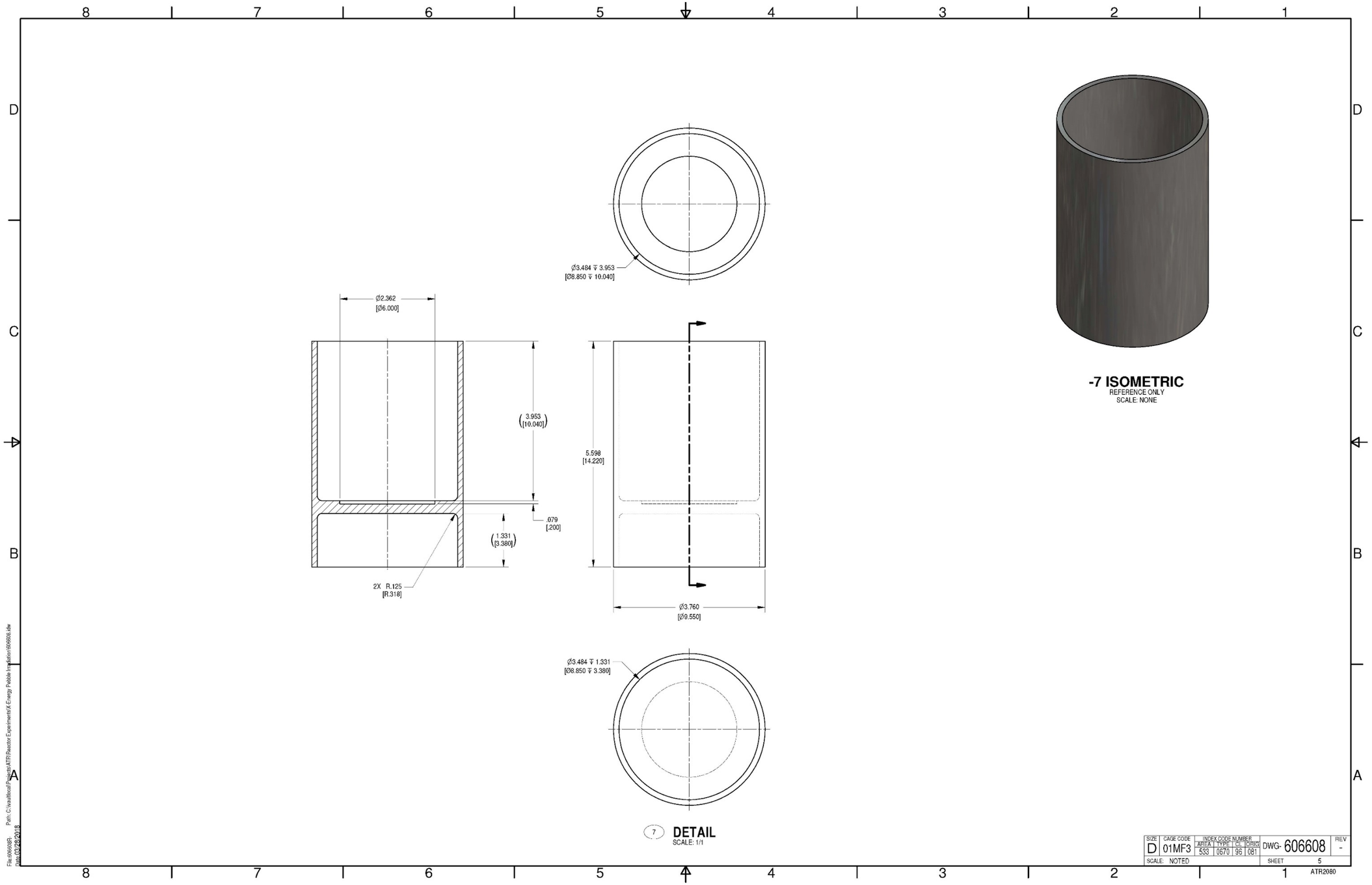

Ø3.484 ↧ 3.953
[Ø8.850 ↧ 10.040]
Ø2.362
[Ø6.000]
3.953
[10.040]
5.598
[14.220]
.079
[.200]
1.331
[3.380]
2X R.125
[R.318]
Ø3.760
[Ø9.550]
Ø3.484 ↧ 1.331
[Ø8.850 ↧ 3.380]
7 DETAIL
SCALE: 1/1
-7 ISOMETRIC
REFERENCE ONLY
SCALE: NONE
SIZE D
CAGE CODE 01MF3
INDEX CODE NUMBER
AREA 533 TYPE 0670 CL 96 ORIG 081
DWG- 606608
REV -
SCALE: NOTED
SHEET 5
ATR2080

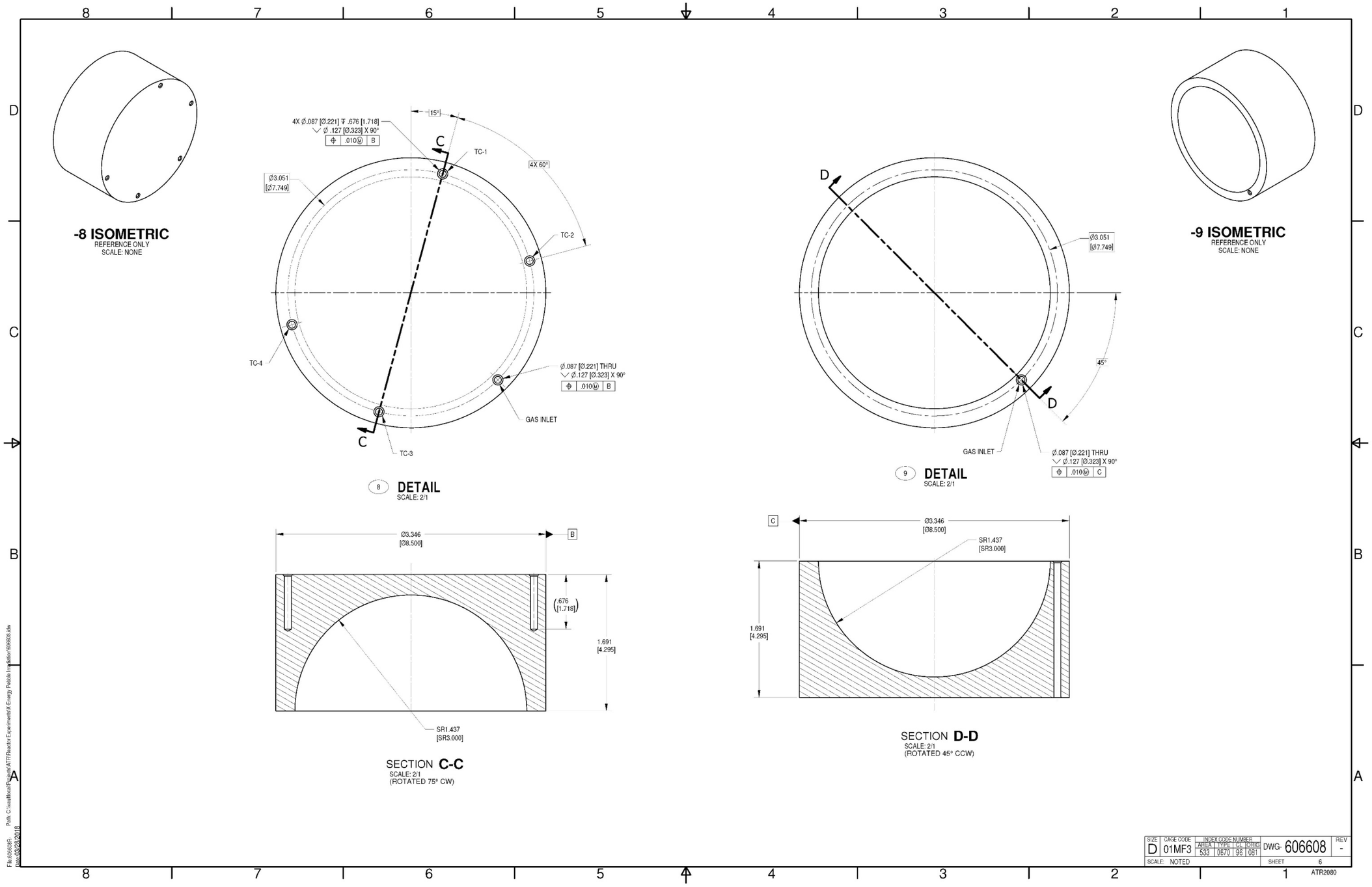

-8 ISOMETRIC
REFERENCE ONLY
SCALE: NONE
4X Ø.087 [Ø.221] ↧ .676 [1.718]
⌵ Ø .127 [Ø.323] X 90°
⌖ .010Ⓜ B
15°
4X 60°
Ø3.051
[Ø7.749]
TC-1
TC-2
TC-3
TC-4
Ø.087 [Ø.221] THRU
⌵ Ø.127 [Ø.323] X 90°
⌖ .010Ⓜ B
GAS INLET
C
8 DETAIL
SCALE: 2/1
Ø3.346
[Ø8.500]
B
(.676
[1.718])
1.691
[4.295]
SR1.437
[SR3.000]
SECTION C-C
SCALE: 2/1
(ROTATED 75° CW)
D
Ø3.051
[Ø7.749]
45°
GAS INLET
Ø.087 [Ø.221] THRU
⌵ Ø.127 [Ø.323] X 90°
⌖ .010Ⓜ C
9 DETAIL
SCALE: 2/1
C
Ø3.346
[Ø8.500]
SR1.437
[SR3.000]
1.691
[4.295]
SECTION D-D
SCALE: 2/1
(ROTATED 45° CCW)
-9 ISOMETRIC
REFERENCE ONLY
SCALE: NONE
SIZE D
CAGE CODE 01MF3
INDEX CODE NUMBER
AREA 533 TYPE 0670 CL 96 ORIG 081
DWG- 606608
REV -
SCALE: NOTED
SHEET 6
ATR2080

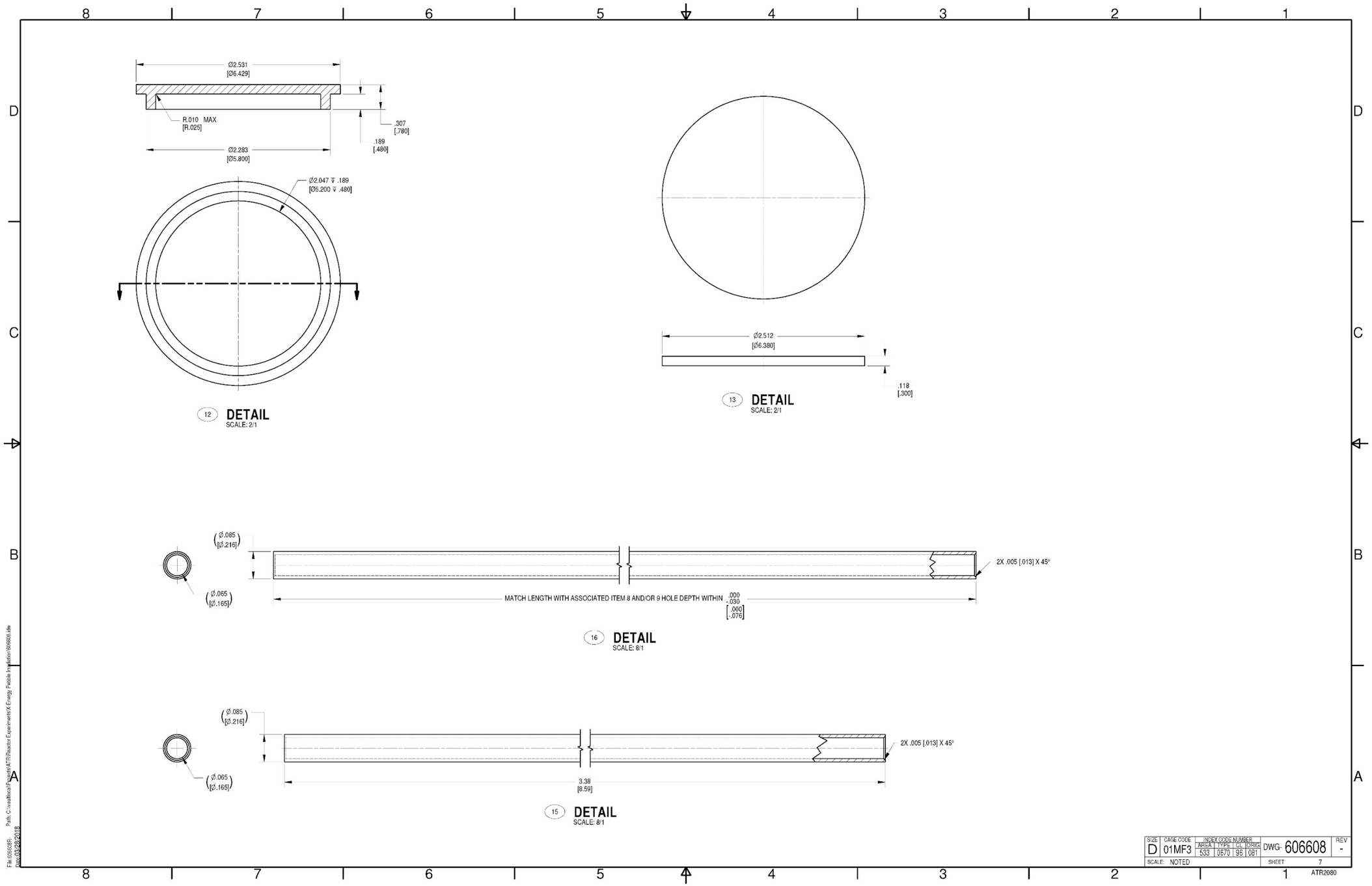

Ø2.531
[Ø6.429]
R.010 MAX
[R.025]
.307
[.780]
.189
[.480]
Ø2.283
[Ø5.800]
Ø2.047 ↧ .189
[Ø5.200 ↧ .480]
12 DETAIL
SCALE: 2/1
Ø2.512
[Ø6.380]
.118
[.300]
13 DETAIL
SCALE: 2/1
(Ø.085
[Ø.216])
(Ø.065
[Ø.165])
2X .005 [.013] X 45°
MATCH LENGTH WITH ASSOCIATED ITEM 8 AND/OR 9 HOLE DEPTH WITHIN .000 -.030 [.000 -.076]
16 DETAIL
SCALE: 8/1
(Ø.085
[Ø.216])
(Ø.065
[Ø.165])
2X .005 [.013] X 45°
3.38
[8.59]
15 DETAIL
SCALE: 8/1
SIZE D
CAGE CODE 01MF3
INDEX CODE NUMBER
AREA 533 TYPE 0670 CL 96 ORIG 081
DWG- 606608
REV -
SCALE: NOTED
SHEET 7
ATR2080

INL.idw Rev 13

2	1	SHEET	REV STATUS OF SHEETS
-	-	REV	

REVISIONS

REV	DESCRIPTION	EFFECTIVE DATE:

NOTES:

1. REMOVE ALL BURRS AND SHARP EDGES.
2. CLEANLINESS PER STD-7022, LEVEL C.
3. QUALITY LEVEL DETERMINATION PER ATR COMP-000023.
4. ASME B&PV CODE, SECTION III, DIV 1, SUBSECTION NF, CLASS 3 MATERIAL.
5. WELD PER INL WELD PROCEDURE SPECIFICATION S2.0 USING ITEM 8 (WELD FILLER METAL).
6. MARK PER THE FOLLOWING:
   METHOD: STD-13122-2D
   LOCATION: APPROXIMATELY AS SHOWN
   CHARACTER HEIGHT: 1/4
   NOMENCLATURE: "606610-1"

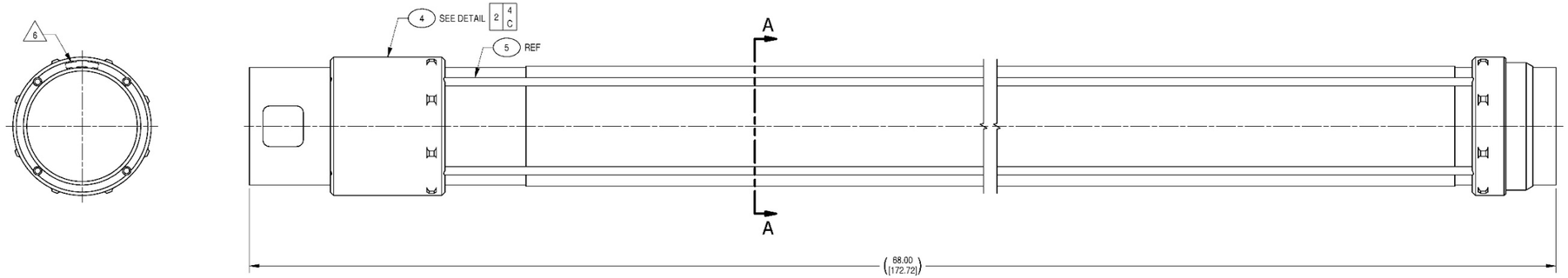

-1 ASSEMBLY
SCALE: 1/2

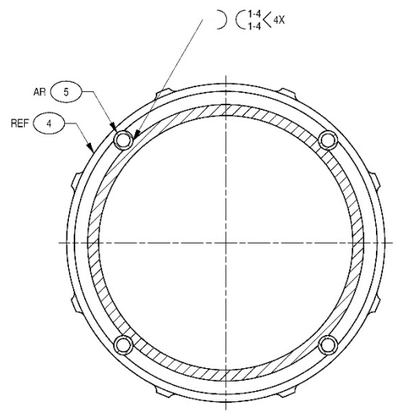

SECTION **A-A**
SCALE: 1/1

QTY REQD	PART OR IDENTIFYING NO.	NOMENCLATURE OR DESCRIPTION	MATERIAL/SPECIFICATION OR VENDOR NAME	ITEM NO.
AR		WELD FILLER METAL	ER 308/308L ASME SFA5.9	8
				7
				6
AR	-5	FLUX WIRE HOLDER GUIDE TUBE	TUBING, Ø5/16 X .049 WALL SEAMLESS 304 SST 4 ASME SA213	5
1	-4	FILTER BODY	ROUND BAR, 304/304L SST 4 ASME SA479	4
				3
				2
	-1	FILTER ASSEMBLY		1

PARTS LIST

DASH NO.	NEXT ASSY
-1	FINAL
APPLICATION	

DIMENSIONING AND SYMBOLOGY PER ASME Y14.5M AND STD-10011
UNLESS OTHERWISE SPECIFIED SURFACE ROUGHNESS 125
DIMENSIONS AND TOLERANCES ARE IN INCHES
TOLERANCES: .X = ± .1
DECIMALS: .XX = ± .03 .XXX = ± .010
FRACTIONS ± 1/8
ANGULAR ± 2°
DO NOT SCALE DRAWING

REQUESTER: D. STACEY
RESP ENGR: J. PALMER
DESIGN: J. PALMER
DRAWN: J. TONKS
PROJECT NO.
SPCL CODE
FOR REVIEW/APPROVAL SIGNATURES SEE ECR NO.
EFFECTIVE DATE:

Idaho National Laboratory

ATR
X-ENERGY 6/7/8
PEBBLE IRRADIATION EXPERIMENT
FILTER
ASSEMBLY AND DETAILS

SIZE	CAGE CODE	INDEX CODE NUMBER AREA	TYPE	CL	ORIG	DWG-	REV
D	01MF3	533	0670	96	081	606610	-

SCALE: NOTED
SHEET 1 OF 2
ATR2080

NOT RELEASED
INFORMATION ONLY
NOT APPROVED FOR FABRICATION OR CONSTRUCTION

File:606610P- Path: C:\Vault\local\Projects\ATR\Reactor Experiments\X-Energy Pebble Irradiation\606610.idw
Date:06/12/2018

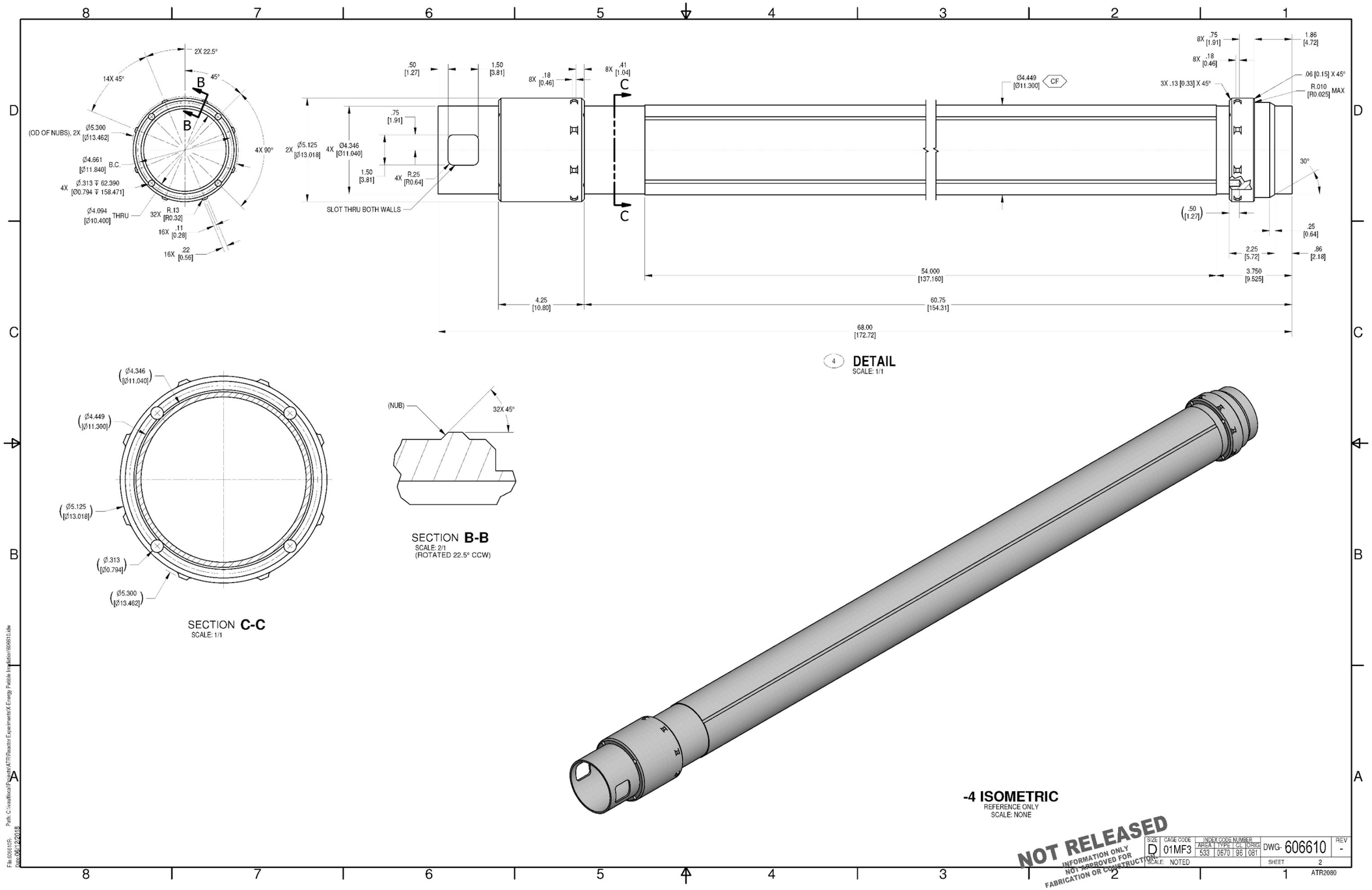

DETAIL
SCALE: 1/1
SECTION B-B
SCALE: 2/1
(ROTATED 22.5° CCW)
SECTION C-C
SCALE: 1/1
-4 ISOMETRIC
REFERENCE ONLY
SCALE: NONE
NOT RELEASED
INFORMATION ONLY
NOT APPROVED FOR
FABRICATION OR CONSTRUCTION
SIZE D
CAGE CODE 01MF3
INDEX CODE NUMBER
AREA 533 TYPE 0670 CL 96 ORIG 081
DWG- 606610
REV -
SCALE: NOTED
SHEET 2
ATR2080